6–16–97
Vol. 62 No. 115
Pages 32471–32682

federal register

Monday
June 16, 1997

Now Available Online

Code of Federal Regulations

via

GPO Access

(Selected Volumes)

Free, easy, online access to selected *Code of Federal Regulations (CFR)* volumes is now available via *GPO Access*, a service of the United States Government Printing Office (GPO). *CFR* titles will be added to *GPO Access* incrementally throughout calendar years 1996 and 1997 until a complete set is available. GPO is taking steps so that the online and printed versions of the *CFR* will be released concurrently.

The *CFR* and *Federal Register* on *GPO Access*, are the official online editions authorized by the Administrative Committee of the Federal Register.

New titles and/or volumes will be added to this online service as they become available.

http://www.access.gpo.gov/nara/cfr

For additional information on ***GPO Access*** products, services and access methods, see page II or contact the *GPO Access* User Support Team via:

★ Phone: toll-free: 1-888-293-6498

★ Email: gpoaccess@gpo.gov

FEDERAL REGISTER Published daily, Monday through Friday, (not published on Saturdays, Sundays, or on official holidays), by the Office of the Federal Register, National Archives and Records Administration, Washington, DC 20408, under the Federal Register Act (49 Stat. 500, as amended; 44 U.S.C. Ch. 15) and the regulations of the Administrative Committee of the Federal Register (1 CFR Ch. I). Distribution is made only by the Superintendent of Documents, U.S. Government Printing Office, Washington, DC 20402.

The Federal Register provides a uniform system for making available to the public regulations and legal notices issued by Federal agencies. These include Presidential proclamations and Executive Orders and Federal agency documents having general applicability and legal effect, documents required to be published by act of Congress and other Federal agency documents of public interest. Documents are on file for public inspection in the Office of the Federal Register the day before they are published, unless earlier filing is requested by the issuing agency.

The seal of the National Archives and Records Administration authenticates this issue of the Federal Register as the official serial publication established under the Federal Register Act. 44 U.S.C. 1507 provides that the contents of the **Federal Register** shall be judicially noticed.

The Federal Register is published in paper, 24x microfiche and as an online database through *GPO Access*, a service of the U.S. Government Printing Office. The online edition of the **Federal Register** on *GPO Access* is issued under the authority of the Administrative Committee of the Federal Register as the official legal equivalent of the paper and microfiche editions. The online database is updated by 6 a.m. each day the **Federal Register** is published. The database includes both text and graphics from Volume 59, Number 1 (January 2, 1994) forward. Free public access is available on a Wide Area Information Server (WAIS) through the Internet and via asynchronous dial-in. Internet users can access the database by using the World Wide Web; the Superintendent of Documents home page address is http://www.access.gpo.gov/su__docs/, by using local WAIS client software, or by telnet to swais.access.gpo.gov, then login as guest, (no password required). Dial-in users should use communications software and modem to call (202) 512–1661; type swais, then login as guest (no password required). For general information about *GPO Access*, contact the *GPO Access* User Support Team by sending Internet e-mail to gpoaccess@gpo.gov; by faxing to (202) 512–1262; or by calling toll free 1–888–293–6498 or (202) 512–1530 between 7 a.m. and 5 p.m. Eastern time, Monday–Friday, except for Federal holidays.

The annual subscription price for the **Federal Register** paper edition is $555, or $607 for a combined **Federal Register**, Federal Register Index and List of CFR Sections Affected (LSA) subscription; the microfiche edition of the **Federal Register** including the Federal Register Index and LSA is $220. Six month subscriptions are available for one-half the annual rate. The charge for individual copies in paper form is $8.00 for each issue, or $8.00 for each group of pages as actually bound; or $1.50 for each issue in microfiche form. All prices include regular domestic postage and handling. International customers please add 25% for foreign handling. Remit check or money order, made payable to the Superintendent of Documents, or charge to your GPO Deposit Account, VISA or MasterCard. Mail to: New Orders, Superintendent of Documents, P.O. Box 371954, Pittsburgh, PA 15250–7954.

There are no restrictions on the republication of material appearing in the **Federal Register.**

How To Cite This Publication: Use the volume number and the page number. Example: 60 FR 12345.

SUBSCRIPTIONS AND COPIES

PUBLIC	
Subscriptions:	
Paper or fiche	**202–512–1800**
Assistance with public subscriptions	**512–1806**
General online information	**202–512–1530; 1–888–293–6498**
Single copies/back copies:	
Paper or fiche	**512–1800**
Assistance with public single copies	**512–1803**
FEDERAL AGENCIES	
Subscriptions:	
Paper or fiche	**523–5243**
Assistance with Federal agency subscriptions	**523–5243**

For other telephone numbers, see the Reader Aids section at the end of this issue.

Printed on recycled paper containing 100% post consumer waste

Contents

Federal Register

Vol. 62, No. 115

Monday, June 16, 1997

Agricultural Marketing Service
RULES
Raisins produced from grapes grown in California, 32473–32476
PROPOSED RULES
Pears (winter) grown in Oregon et al., 32548–32552

Agriculture Department
See Agricultural Marketing Service
See Federal Crop Insurance Corporation
See Forest Service
See Rural Utilities Service

Army Department
See Engineers Corps
NOTICES
Meetings:
Reserve Officers' Training Corps (ROTC) Program Subcommittee, 32588
Military traffic management:
Commercial transportation; protective service and accessorial service rate tenders, 32588
Patent licenses; non-exclusive, exclusive, or partially exclusive:
Microarc Chaff etc., 32588–32589

Bonneville Power Administration
NOTICES
Environmental statements; notice of intent:
Transmission System Vegetation Management Program, 32591–32592

Centers for Disease Control and Prevention
NOTICES
Meetings:
Disease, Disability, and Injury Prevention and Control special emphasis panels, 32616–32617

Central Intelligence Agency
RULES
Freedom of Information and Privacy Acts; implementation, 32479–32500

Commerce Department
See Export Administration Bureau
See Foreign-Trade Zones Board
See International Trade Administration
See National Oceanic and Atmospheric Administration
See National Technical Information Service
NOTICES
Agency information collection activities:
Submission for OMB review; comment request, 32580–32581

Commodity Futures Trading Commission
NOTICES
Meetings; Sunshine Act, 32588

Defense Department
See Army Department
See Engineers Corps

Defense Nuclear Facilities Safety Board
NOTICES
Privacy Act:
Systems of records, 32591

Drug Enforcement Administration
NOTICES
Agency information collection activities:
Proposed collection; comment request, 32656–32657
Submission for OMB review; comment request, 32657–32658
Applications, hearings, determinations, etc.:
Alhanati, Craig K., 32658
Howard, Dennis Robert, M.D., 32658–32663
Radian International LLC
Correction, 32663
Turk, Ellis, M.D.; correction, 32682

Energy Department
See Bonneville Power Administration
See Energy Information Administration
See Federal Energy Regulatory Commission

Energy Information Administration
NOTICES
Agency information collection activities:
Proposed collection; comment request; correction, 32682

Engineers Corps
NOTICES
Environmental statements; notice of intent:
Central and southern Florida Project; Indian River Lagoon restoration feasibility study, 32589–32591

Environmental Protection Agency
RULES
Air quality implementation plans:
Preparation, adoption, and submittal—
State capture efficiency ozone testing, 32500–32536
Air quality implementation plans; approval and promulgation; various States:
South Carolina, 32537–32538
PROPOSED RULES
Air quality implementation plans; approval and promulgation; various States:
South Carolina, 32559
NOTICES
Air pollution control; new motor vehicles and engines:
Urban buses (1993 and earlier model years); retrofit/rebuild requirements; equipment certification—
Engelhard Corp., 32599–32602
Engine Control Systems Ltd., 32602–32604
Meetings:
Pesticide Program Dialogue Committee, 32604–32605
Risk Assessment and Risk Management Commission, 32605
Science Advisory Board, 32605–32606

Executive Office of the President
See Central Intelligence Agency
See Presidential Documents
See Trade Representative, Office of United States

Export Administration Bureau
NOTICES
Agency information collection activities:
Proposed collection; comment request, 32581

Family Support Administration
See Refugee Resettlement Office

Farm Credit Administration
RULES
Farm credit system:
Referral of known or suspected criminal violations
Effective date, 32478

Federal Aviation Administration
RULES
Class E airspace, 32478–32479
NOTICES
Airport noise compatibility program:
Noise exposure map—
Burlington International Airport; VT, 32675

Federal Communications Commission
NOTICES
Agency information collection activities:
Submission for OMB review; comment request, 32606–32608

Federal Crop Insurance Corporation
PROPOSED RULES
Common crop insurance regulations:
Tobacco, 32544–32548

Federal Deposit Insurance Corporation
NOTICES
Meetings; Sunshine Act, 32608

Federal Energy Regulatory Commission
NOTICES
Electric rate and corporate regulation filings:
Southern Co. Services, Inc., et al., 32593–32595
UtiliCorp United Inc., et al., 32595–32599
Applications, hearings, determinations, etc.:
Illinova Energy Partners, Inc., 32592
Northern Natural Gas Co., 32592–32593
Tucson Electric Power Co., 32593
Wisconsin Power & Light Co., 32593

Federal Labor Relations Authority
NOTICES
Amicus curiae briefs in representation proceedings pending before FLRA; opportunity to present, 32608–32610

Federal Reserve System
NOTICES
Banks and bank holding companies:
Formations, acquisitions, and mergers, 32610–32611
Permissible nonbanking activities, 32611

Federal Retirement Thrift Investment Board
RULES
Thrift savings plan:
Miscellaneous regulations, 32473

Fish and Wildlife Service
NOTICES
Meetings:
North American Wetlands Conservation Council, 32651–32652

Food and Drug Administration
RULES
Human drugs:
Investigational new drug applications—
Informed consent exception, 32479
NOTICES
Committees; establishment, renewal, termination, etc.:
Veterinary Medicine Advisory Committee, 32617
Guidance documents; availability, etc.:
Pharmacokinetics and pharmacodynamics in patients with impaired renal function:Study design, data analysis, and impact on dosing and labeling; availability, 32617–32618
Meetings:
Advisory committees, panels, etc., 32618–32620
Reports; availability, etc.:
Positron emission tomography drug products; guidance
Comment period availability, 32621

Foreign-Trade Zones Board
NOTICES
Applications, hearings, determinations, etc.:
Illinois
Henkel Corp.; natural vitamin manufacturing plant, 32581–32582
Louisiana
Murphy Oil USA, Inc., oil refinery, 32582
Missouri, 32582–32583
New Jersey
Coastal Eagle Point Oil Co.; oil refinery, 32583
Vermont
Vermont Electromagnetics Corp.; miniature coaxiale cable systems, 32583–32584

Forest Service
NOTICES
Meetings:
Willamette Provincial Interagency Executive Committee Advisory Committee, 32580

General Services Administration
NOTICES
Federal property management:
Commercial antennas on Federal property; placement, 32611–32615

Health and Human Services Department
See Centers for Disease Control and Prevention
See Food and Drug Administration
See National Institutes of Health
See Refugee Resettlement Office
See Substance Abuse and Mental Health Services Administration
NOTICES
Agency information collection activities:
Submission for OMB review; comment request, 32615
Meetings:
Vital and Health Statistics National Committee, 32615–32616
Scientific misconduct findings; administrative actions:
Li, Fugang. Ph.D., 32616

Housing and Urban Development Department
NOTICES
Agency information collection activities:
Proposed collection; comment request, 32649–32651

Interior Department
See Fish and Wildlife Service

See Land Management Bureau
See National Park Service
See Surface Mining Reclamation and Enforcement Office

Internal Revenue Service
NOTICES
Agency information collection activities:
Proposed collection; comment request, 32678–32680

International Trade Administration
NOTICES
Antidumping:
Engineered process gas turbo-compressor systems, assembled or unassembled, and complete or incomplete, from—
Japan, 32584–32585
Secretarial business development mission to Canada, 32585–32586

Justice Department
See Drug Enforcement Administration
NOTICES
Agency information collection activities:
Proposed collection; comment request, 32654–32656

Land Management Bureau
NOTICES
Meetings:
Resource advisory councils—
Northwest Colorado, 32652

Merit Systems Protection Board
NOTICES
Opportunity to file amicus briefs in Fitzgerald et al. v Department of Defense, 32663–32664

National Council on Disability
NOTICES
Meetings; Sunshine Act, 32664

National Highway Traffic Safety Administration
RULES
Motor vehicle safety standards:
Controls and displays, accessibility and visibility; Federal regulatory review, 32538–32543
PROPOSED RULES
Motor vehicle safety standards:
Triangular warning devices; disabled buses and trucks; placement on roadway, 32562–32564
Windshields—
Wiping and washing systems; windshield defrosting and defogging systems, 32559–32562
NOTICES
Insurer reporting requirements:
Theft and recovery of vehicles; theft deterrence assistance and premium reduction plans, 32676
Motor vehicle safety standards; exemption petitions, etc.:
Fleetwood Enterprises, Inc., 32676–32677

National Institutes of Health
NOTICES
Grants and cooperative agreements; availability, etc.:
Human genome research; low-cost, high-accuracy DNA sequencing technologies, 32621–32625
Meetings:
National Cancer Institute, 32625
National Heart, Lung, and Blood Institute, 32625–32626
National Institute of Child Health and Human Devlopment, 32626
National Institute of Mental Health, 32626
National Institutes of General Medical Sciences, 32626
Research Grants Division special emphasis panels, 32626–32627

National Oceanic and Atmospheric Administration
RULES
Fishery conservation and management:
West Coast States and Western Pacific fisheries—
Pacific Coast groundfish, 32543
PROPOSED RULES
Fishery conservation and management:
Alaska; fisheries of Exclusive Economic Zone—
At-sea scale certification program, 32564–32578
Bering Sea and Aleutian Islands groundfish, 32579
NOTICES
Meetings:
Western Pacific Fishery Management Council, 32587
Permits:
Marine mammals, 32586–32587

National Park Service
NOTICES
Native American human remains and associated funerary objects:
Sitka National Historical Park, Sitka, AK—
Inventory completion, 32652
Tallahassee Museum of History & Natural Science, Tallahassee, FL—
Ceramic pot; repatriation, 32652–32653

National Technical Information Service
NOTICES
Meetings:
Advisory Board, 32587

Nuclear Regulatory Commission
RULES
Fee schedules revision; 100% fee recovery (1997 FY)
Correction, 32682
PROPOSED RULES
Byproduct material; domestic licensing:
Radioactive drugs containing one microcurie of carbon-14 urea; distribution to persons for ''in vivo'' diagnostic use, 32552–32558
NOTICES
Environmental statements; availability, etc.:
Portland General Electric Co., 32664–32665
Tennessee Valley Authority, 32665–32666
Regulatory guides; issuance, availability, and withdrawal, 32666–32667

Office of United States Trade Representative
See Trade Representative, Office of United States

Presidential Advisory Committee on Gulf War Veterans' Illnesses
NOTICES
Meetings, 32667

Presidential Documents
EXECUTIVE ORDERS
Organization for the Prohibition of Chemical Weapons (EO 13049), 32471

Public Health Service
See Centers for Disease Control and Prevention
See Food and Drug Administration

See National Institutes of Health
See Substance Abuse and Mental Health Services Administration

Refugee Resettlement Office
NOTICES
Grants and cooperative agreements; availability, etc.:
Refugee resettlement program—
Omnibus discretionary social service program, 32627–32648

Rural Utilities Service
RULES
Electric loans:
Alaska; RUS privatization demonstration prepayment program, 32477–32478
Telecommunications systems construction policies and procedures:
Digital, stored program controlled central office equipment; acceptance test policy, 32476–32477
PROPOSED RULES
Telecommunications systems construction policies and procedures:
Digital, stored program controlled central office equipment; acceptance test policy, 32552

Securities and Exchange Commission
NOTICES
Meetings; Sunshine Act, 32668–32669
Self-regulatory organizations; proposed rule changes:
National Association of Securities Dealers, Inc., 32669–32672
Pacific Exchange, Inc.; correction, 32682
Applications, hearings, determinations, etc.:
AIM Strategic Income Fund, Inc., 32667–32668

Small Business Administration
NOTICES
Applications, hearings, determinations, etc.:
Capitol Health Partners, L.P., 32672

State Department
PROPOSED RULES
Visas; immigrant documentation:
Diversity immigrant visa program; lottery administration fee, 32558–32559

Substance Abuse and Mental Health Services Administration
NOTICES
Grants and cooperative agreement awards:
Farm Resource Center, Inc., Cairo, IL, 32648
Grants and cooperative agreements; availability, etc.:
U.S.-Mexico border four-state substance abuse initiative, 32648–32649

Surface Mining Reclamation and Enforcement Office
NOTICES
Agency information collection activities:
Submission for OMB review; comment request, 32653–32654

Surface Transportation Board
NOTICES
Railroad services abandonment:
Norfolk & Western Railway Co., 32677–32678

Thrift Supervision Office
NOTICES
Agency information collection activities:
Proposed collection; comment request, 32680–32681

Trade Representative, Office of United States
NOTICES
Generalized System of Preferences:
Annual Review (1995)—
Results of annual GSP product review, 32672–32674

Transportation Department
See Federal Aviation Administration
See National Highway Traffic Safety Administration
See Surface Transportation Board
NOTICES
Agreements filed; weekly receipts, 32674
Aviation proceedings:
Hearings, etc.—
Accessair Holdings, Inc., 32674
Certificates of public convenience and necessity and foreign air carrier permits; weekly applications, 32674–32675

Treasury Department
See Internal Revenue Service
See Thrift Supervision Office
NOTICES
Organization, functions, and authority delegations:
Assistant Secretary (Fiscal), 32678
Senior Executive Service:
Legal Division Performance Review Board; membership, 32678

Utah Reclamation Mitigation and Conservation Commission
NOTICES
Environmental statements; availability, etc.:
Annual update; recommendations request, 32681

Reader Aids

Additional information, including a list of public laws, telephone numbers, reminders, and finding aids, appears in the Reader Aids section at the end of this issue.

Electronic Bulletin Board

Free **Electronic Bulletin Board** service for Public Law numbers, **Federal Register** finding aids, and a list of documents on public inspection is available on 202–275–1538 or 275–0920.

CFR PARTS AFFECTED IN THIS ISSUE

A cumulative list of the parts affected this month can be found in the Reader Aids section at the end of this issue.

3 CFR
Executive Orders:
12552 (Revoked by EO 13048).....33471
13049.....32471

5 CFR
1690.....32473

7 CFR
989.....32473
1753.....32476
1786.....32477
Proposed Rules:
401.....32544
457.....32544
927.....32548
1753.....32552

10 CFR
170.....32682
171.....32682
Proposed Rules:
30.....32552
32.....32552

12 CFR
617.....32478

14 CFR
71.....32478

21 CFR
312.....32479

22 CFR
Proposed Rules:
22.....32558

32 CFR
1900.....32479
1901.....32479
1907.....32479
1908.....32479
1909.....32479

40 CFR
51.....32500
52.....32537
Proposed Rules:
52.....32559

49 CFR
571.....32538
Proposed Rules:
571.....32562

50 CFR
660.....32543
Proposed Rules:
679 (2 documents) 32564, 32579

Federal Register
Vol. 62, No. 115
Monday, June 16, 1997

Presidential Documents

Title 3—

The President

Executive Order 13049 of June 11, 1997

Organization for the Prohibition of Chemical Weapons

By the authority vested in me as President by the Constitution and the laws of the United States of America, including section 1 of the International Organizations Immunities Act (22 U.S.C. 288), and having found that the Organization for the Prohibition of Chemical Weapons is a public international organization in which the United States participates within the meaning of the International Organization Immunities Act, I hereby designate the Organization for the Prohibition of Chemical Weapons as a public international organization entitled to enjoy the privileges, exemptions, and immunities conferred by the International Organizations Immunities Act. This designation is not intended to abridge in any respect privileges, exemptions, or immunities that such organization may have acquired or may acquire by international agreements, including the Chemical Weapons Convention, or by congressional action.

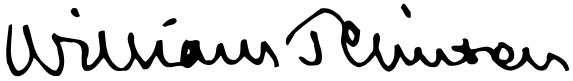

THE WHITE HOUSE,
June 11, 1997.

[FR Doc. 97–15879
Filed 6–13–97; 8:45 am]
Billing code 3195–01–P

Rules and Regulations

Federal Register
Vol. 62, No. 115
Monday, June 16, 1997

This section of the FEDERAL REGISTER contains regulatory documents having general applicability and legal effect, most of which are keyed to and codified in the Code of Federal Regulations, which is published under 50 titles pursuant to 44 U.S.C. 1510.

The Code of Federal Regulations is sold by the Superintendent of Documents. Prices of new books are listed in the first FEDERAL REGISTER issue of each week.

FEDERAL RETIREMENT THRIFT INVESTMENT BOARD

5 CFR Part 1690

Miscellaneous Regulations

AGENCY: Federal Retirement Thrift Investment Board.

ACTION: Final rule.

SUMMARY: The Executive Director of the Federal Retirement Thrift Investment Board (Board) is adopting as final the Board's interim Thrift Savings Plan (TSP) plan year regulations.

DATES: This regulation is effective June 16, 1997.

FOR FURTHER INFORMATION CONTACT: Merritt A. Willing on (202) 942–1666.

SUPPLEMENTARY INFORMATION: The Board administers the TSP, a defined contribution plan for Federal employees established by the Federal Employees' Retirement System Act of 1986, Pub. L. 99–335, 100 Stat. 514 (codified, as amended, largely at 5 U.S.C. 8401–8479).

An employee benefit plan must establish a plan year for accounting and auditing purposes. Under 5 U.S.C. 8439(b), the Board must engage a certified public accountant to perform an annual audit of the Thrift Savings Fund for the preceding year. A plan year must be established by the TSP to allow these necessary audits to be performed. On November 12, 1987, the Board published an interim rule, with a request for comments, in the **Federal Register** (52 FR 43315), establishing a plan year for the TSP. For administrative convenience, the plan year adopted by the Board is the same as the calendar year. Unless otherwise indicated in future regulations, this plan year will apply in all cases where the TSP must be evaluated on an annual basis. The sole exception to this principle will be situations where the Board is subject to Government financial requirements on a fiscal year basis. (The Federal Government's fiscal year is October 1 through September 31.) The Board received no comments on the interim rule and therefore is adopting it as final without change.

Regulatory Flexibility Act

I certify that these regulations will not have a significant economic impact on a substantial number of small entities. They will affect only Federal Government procedures related to the TSP.

Paperwork Reduction Act

I certify that these regulations do not require additional reporting under the criteria of the Paperwork Reduction Act of 1980.

Unfunded Mandates Reform Act of 1995

Pursuant to the Unfunded Mandates Reform Act of 1995, Pub. L. 104–4, section 201, 109 Stat. 48, 64, the effect of these regulations on State, local and tribal governments and on the private sector has been assessed. This regulation will not compel the expenditure in any one year of $100 million or more by any State, local or tribal governments in the aggregate or by the private sector. Therefore, a statement under section 202, 109 Stat. 48, 64–65, is not required.

Submission to Congress and the General Accounting Office

Under 5 U.S.C. 801(a)(1)(A), the Board submitted a report containing this and other required information to the U.S. Senate, the U.S. House of Representatives, and the Comptroller General of the United States before the publication of this rule in today's **Federal Register**. This rule is not a major rule as defined in 5 U.S.C. 804(2).

Federal Retirement Thrift Investment Board.

Roger W. Mehle,

Executive Director.

Accordingly, the interim rule adding 5 CFR Part 1690, which was published at 52 FR 43315 on November 12, 1987, is adopted as final without change.

[FR Doc. 97–15723 Filed 6–13–97; 8:45 am]

BILLING CODE 6760–01–P

DEPARTMENT OF AGRICULTURE

Agricultural Marketing Service

7 CFR Part 989

[FV97–989–1 FIR]

Raisins Produced From Grapes Grown In California; Final Free and Reserve Percentages for the 1996–97 Crop Year for Natural (Sun-Dried) Seedless Raisins

AGENCY: Agricultural Marketing Service, USDA.

ACTION: Final rule.

SUMMARY: The Department of Agriculture (Department) is adopting, as a final rule, without change, the provisions of an interim final rule which established final free and reserve percentages for 1996–97 crop Natural (sun-dried) Seedless raisins. The percentages are 86 percent free and 14 percent reserve. These percentages are intended to stabilize supplies and prices, and strengthen market conditions. This rule was recommended by the Raisin Administrative Committee (Committee), the body which locally administers the marketing order.

EFFECTIVE DATE: July 16, 1997.

FOR FURTHER INFORMATION CONTACT: Maureen Pello, Marketing Specialist, California Marketing Field Office, Fruit and Vegetable Division, AMS, USDA, 2202 Monterey Street, suite 102B, Fresno, California 93721; telephone: 209–487–5901, Fax (209) 487–5906; or Mark A. Slupek, Marketing Specialist, Marketing Order Administration Branch, Fruit and Vegetable Division, AMS, USDA, room 2523–S, P.O. Box 96456, Washington, DC 20090–6456; telephone: 202–205–2830. Small businesses may request information on compliance with this regulation by contacting: Jay Guerber, Marketing Order Administration Branch, Fruit and Vegetable Division, AMS, USDA, P.O. Box 96456, room 2525–S, Washington, DC 20090–6456; telephone (202) 720–2491; Fax # (202) 720–5698.

SUPPLEMENTARY INFORMATION: This rule is issued under marketing agreement and Order No. 989 (7 CFR part 989), both as amended, regulating the handling of raisins produced from grapes grown in California, hereinafter referred to as the ''order.'' The marketing agreement and order are

effective under the Agricultural Marketing Agreement Act of 1937, as amended (7 U.S.C. 601–674), hereinafter referred to as the ''Act.''

The Department of Agriculture (Department) is issuing this rule in conformance with Executive Order 12866.

This rule has been reviewed under Executive Order 12988, Civil Justice Reform. Under the marketing order provisions now in effect, final free and reserve percentages may be established for raisins acquired by handlers during the crop year. This rule finalizes an interim final rule which established final free and reserve percentages for Natural (sun-dried) Seedless raisins for the 1996–97 crop year, beginning August 1, 1996, through July 31, 1997. This rule will not preempt any State or local laws, regulations, or policies, unless they present an irreconcilable conflict with this rule.

The Act provides that administrative proceedings must be exhausted before parties may file suit in court. Under section 608c(15)(A) of the Act, any handler subject to an order may file with the Secretary a petition stating that the order, any provision of the order, or any obligation imposed in connection with the order is not in accordance with law and requesting a modification of the order or to be exempt therefrom. Such handler is afforded the opportunity for a hearing on the petition. After the hearing, the Secretary would rule on the petition. The Act provides that the district court of the United States in any district in which the handler is an inhabitant, or has his or her principal place of business, has jurisdiction in equity to review the Secretary's ruling on the petition, provided an action is filed not later than 20 days after the date of the entry of the ruling.

The order prescribes procedures for computing trade demands and preliminary and final percentages that establish the amount of raisins that can be marketed throughout the season. The regulations apply to all handlers of California raisins. Raisins in the free percentage category may be shipped immediately to any market, while reserve raisins must be held by handlers in a reserve pool for the account of the Committee, which is responsible for local administration of the order. Under the order, reserve raisins may be: Sold at a later date by the Committee to handlers for free use or to replace part of the free raisins they exported; used in diversion programs; exported to authorized countries; carried over as a hedge against a short crop the following year; or disposed of in other outlets noncompetitive with those for free tonnage raisins.

While this rule may restrict the amount of Natural (sun-dried) Seedless raisins that enter domestic markets, final free and reserve percentages are intended to promote stronger marketing conditions, to stabilize prices and supplies, and to improve grower returns. In addition to the quantity of raisins released under the preliminary percentages and the final percentages, the order specifies methods to make available additional raisins to handlers by requiring sales of reserve pool raisins for use as free tonnage raisins under ''10 plus 10'' offers, and authorizing sales of reserve raisins under certain conditions, such as a national emergency, crop failure, change of economic or marketing conditions, or if free tonnage shipments during the current crop year exceed shipments of the prior crop year by more than 5 percent.

The Department's ''Guidelines for Fruit, Vegetable, and Specialty Crop Marketing Orders'' specify that 110 percent of recent years' sales should be made available to primary markets each season before recommendations for volume regulation are approved. This goal is met by the establishment of a final percentage which releases 100 percent of the computed trade demand and the additional release of reserve raisins to handlers under ''10 plus 10'' offers. The ''10 plus 10'' offers are two simultaneous offers of reserve pool raisins which are made available to handlers each season. For each such offer, a quantity of raisins equal to 10 percent of the prior year's shipments is made available for free use. Approximately 59,000 tons of Natural (sun-dried) Seedless were purchased by handlers for free use pursuant to these offers. The quantity available under this rule would be about 406,000 tons natural condition raisins or 381,000 tons packed raisins. This is 129 percent of the quantity shipped in 1995.

Pursuant to section 989.54(a) of the order, the Committee met on August 15, 1996, to review shipment data, inventory data, and the 1995 crop conditions for raisins of all varietal types. The Committee computed a trade demand for each varietal type for which a free tonnage percentage might be recommended. The trade demand is 90 percent of the prior year's shipments of free tonnage and reserve tonnage raisins sold for free use for each varietal type into all market outlets, adjusted by subtracting the carryin of each varietal type on August 1 of the current crop year and by adding to the trade demand the desirable carryout for each varietal type at the end of that crop year. As specified in section 989.154, the desirable carryout for each varietal type shall be equal to the shipments of free tonnage raisins of the prior crop year during the months of August and September. If the prior year's shipments are limited because of crop conditions, the total shipments during that period of time during one of the three years preceding the prior crop year may be used. In accordance with these provisions, the Committee computed and announced a 1996–97 trade demand of 232,765 tons for Natural (sun-dried) Seedless raisins.

As required under section 989.54(b) of the order, the Committee met on October 3, 1996, and computed and announced a preliminary crop estimate and preliminary free and reserve percentages for Natural (sun-dried) Seedless raisins which released 85 percent of the trade demand. On October 3, 1996, the Committee's crop estimate and preliminary free and reserve percentages were as follows: 272,034 tons, and 73 percent free and 27 percent reserve.

Also at that meeting, the Committee computed and announced preliminary crop estimates and preliminary free and reserve percentages for Dipped Seedless, Oleate and Related Seedless, Golden Seedless, Zante Currant, Sultana, Muscat, Monukka, and Other Seedless raisins. The Committee determined, however, that volume control percentages only were warranted for Natural (sun-dried) Seedless raisins. It determined that the supplies of the other varietal types would be less than or close enough to the computed trade demands for each of these varietal types. These varietal types are produced in much smaller quantities than Natural (sun-dried) Seedless raisins. In view of these factors, volume control percentages either would not be necessary to maintain market stability or would not be economically practical for the other varietal types.

Pursuant to section 989.54(c), the Committee may adopt interim free and reserve percentages. Interim percentages may release less than the computed trade demand for each varietal type. Interim percentages for Natural (sun-dried) Seedless raisins of 85.75 percent free and 14.25 percent reserve were announced by the Committee on February 3, 1997. The Committee considered its final estimate of 270,999 tons of 1996–97 production of Natural (sun-dried) Seedless raisins when it established the interim percentages. That action released most, but not all, of the computed trade demand for Natural (sun-dried) Seedless raisins.

In addition, under section 989.54(d) of the order, the Committee is required to recommend to the Secretary, no later than February 15 of each crop year, final free and reserve percentages which, when applied to the final production estimate of a varietal type, will tend to release the full trade demand for any varietal type. The Committee met on February 3, 1997, for this purpose.

The computed trade demand (232,765 tons) is 90 percent of the prior year's shipments of free tonnage and reserve tonnage raisins sold for free use into all market outlets (282,289 tons), adjusted by subtracting the carryin of each varietal type on August 1 of the current crop year (113,697 tons) and by adding to the trade demand the desirable carryout for each varietal type at the end of that crop year (64,173 tons). No information was presented between the August 15, 1996, meeting and the February 3, 1997, meeting to cause the Committee to make any change to the computed trade demand. Thus, the Committee divided the computed trade demand of 232,765 tons by the final production estimate (270,999 tons) and recommended a final free percentage of 86 percent and a final reserve percentage of 14 percent.

The free and reserve percentages established by the interim final rule finalized herein apply uniformly to all handlers in the industry, whether small or large, and there are no known additional costs incurred by small handlers. Although raisin markets are limited, they are available to all handlers, regardless of size. The stabilizing effects of the percentages impact both small and large handlers positively by helping them maintain and expand markets.

Pursuant to requirements set forth in the Regulatory Flexibility Act (RFA), the Agricultural Marketing Service (AMS) has considered the economic impact of this action on small entities. Accordingly, AMS has prepared this final regulatory flexibility analysis.

There are approximately 20 handlers of California raisins who are subject to regulation under the raisin marketing order and approximately 4,500 producers of raisins in the regulated area. Small agricultural service firms, which includes handlers, have been defined by the Small Business Administration (13 CFR 121.601) as those having annual receipts of less than $5,000,000, and small agricultural producers are defined as those having annual receipts of less than $500,000. No more than 8 handlers, and a majority of producers, of California raisins may be classified as small entities. Twelve of the 20 handlers subject to regulation have annual sales estimated to be at least $5,000,000, and the remaining 8 handlers have sales less than $5,000,000, excluding receipts from any other sources.

Committee and subcommittee meetings are widely publicized in advance and are held in a location central to the production area. The meetings are open to all industry members (including small business entities) and other interested persons—who are encouraged to participate in the deliberations and voice their opinions on topics under discussion. Thus, Committee recommendations can be considered to represent the interests of small business entities in the industry.

Many years of marketing experience led to the development of the current volume control procedures. These procedures have helped the industry address its marketing problems by keeping supplies in balance with domestic and export market needs, and strengthening market conditions. The current volume control procedures fully supply the domestic and export markets, provide for market expansion, and help prevent oversupplies in the domestic market.

In discussing the possibility of marketing percentages for the 1996–97 crop year, the Committee considered: (1) The estimated tonnage held by producers, handlers, and for the account of the Committee at the beginning of the crop year (113,697 tons); (2) the estimated tonnage of standard raisins which will be produced in 1996–97 (270,999 tons); (3) the trade demand for raisins in free tonnage outlets in 1996–97 (232,765 tons); (4) the estimated desirable carryout at the end of the 1996–97 crop year for free tonnage (64,173 tons); (5) the estimated world raisin supply and demand situation; (6) the current prices being received and the probable level of prices to be received for raisins by producers and handlers; and (7) the trend and level of consumer income.

The Committee's review of the factors resulted in the computation and announcement in October 1996 of preliminary free and reserve percentages for Natural (sun-dried) Seedless raisins. This varietal type is the major commercial varietal type produced in California. Although the 1996–97 crop was estimated to be down from previous crop years, the total supply available for marketing (270,999 tons) exceeded the computed trade demand (232,765 tons) by a large enough quantity (38,234 tons) to support limiting the quantity available for sale in free tonnage markets by placing a portion of the crop aside to be sold when demand improved in the current or subsequent season.

This rule finalizes an interim final rule which established free and reserve percentages for Natural (sun-dried) Seedless raisins in accordance with the volume control provisions in section 989.54. Raisins in the free percentage category may be shipped immediately to any market, while reserve raisins must be held by handlers in a reserve pool for the account of the Committee, which is responsible for local administration of the order. Under the order, reserve raisins may be: Sold at a later date by the Committee to handlers for free use or to replace part of the free use raisins they exported; used in diversion programs; exported to authorized countries; carried over as a hedge against a short crop the following year; or disposed of in other outlets noncompetitive with those for free tonnage raisins. The percentage releases provide all handlers with the opportunity to benefit from the most profitable domestic market. That market is available to all handlers, regardless of handler size.

Raisin variety grapes can be marketed as fresh grapes, crushed for use in the production of wine or juice concentrate, or dried into raisins. Annual fluctuations in the fresh grape, wine, and concentrate markets cause fluctuations in raisin supply. These supply fluctuations can cause producer price instability and disorderly market conditions. Volume control is helpful to the raisin industry because it lessens the impact of such fluctuations and contributes to orderly marketing. Industry statistics show that Natural (sun-dried) Seedless raisin receipts have varied widely over the last ten years, from a low of 325,911 tons in 1995 to a high of 395,501 tons in 1989. Average receipts for the last 10 years have been around 365,000 tons. As crop size has fluctuated, volume regulations have contributed toward orderly marketing and market stability, and have helped moderate the variation in returns for all growers and handlers, both large and small. For instance, handler receipts in the shortest crop year (1995) were 89 percent of the ten-year average (1986–1995). Handler receipts in the biggest crop year (1989) were 108 percent of the ten-year average.

Free and reserve percentages are established by variety, and only in years when the supply exceeds the trade demand by a large enough margin that the Committee believes volume control is necessary to maintain market stability. Accordingly, in assessing whether to apply volume control regulation or, as an alternative, not to

apply such regulation, the Committee recommended only one of the 9 raisin varietal types defined under the marketing order for volume control regulation this season.

As mentioned earlier, the Department's ''Guidelines for Fruit, Vegetable, and Specialty Crop Marketing Orders'' specify that 110 percent of recent years' sales should be made available to primary markets each season before recommendations for volume regulation are approved. The quantity available under this rule is 129 percent of the quantity shipped in 1995.

The free and reserve percentages established by the interim final rule released the full trade demand and apply uniformly to all handlers in the industry, regardless of size. There are no known additional costs incurred by small handlers that are not incurred by large handlers. The stabilizing effects of the percentages impact all handlers positively by helping them maintain and expand markets, despite seasonal supply fluctuations. Likewise, price stability positively impacts all producers by allowing them to better anticipate the revenues their raisins will generate.

While the level of benefits of this rulemaking are difficult to quantify, the stabilizing effects of the volume regulations impact both small and large handlers positively by helping them maintain markets even though raisin supplies fluctuate widely from season to season.

This rule will not impose any additional reporting or recordkeeping requirements on either small or large raisin handlers. As with all Federal marketing order programs, reports and forms are periodically reviewed to reduce information requirements and duplication by industry and public sectors. In addition, as noted in the initial regulatory flexibility analysis, the Department has not identified any relevant Federal rules that duplicate, overlap, or conflict with this rule.

An interim final rule concerning this action was issued by the Department on April 7, 1997, put on display at the Office of the Federal Register on April 11, 1997, and published in the **Federal Register** on April 14, 1997. Copies of the rule were mailed by the Committee's staff to all Committee members, raisin handlers, and dehydrators. Finally, the rule was made available through the Internet by the Office of the Federal Register. That rule provided for a 30-day comment period which ended May 14, 1997. No comments were received.

After consideration of all relevant material presented, including the Committee's recommendation, and other information, it is found that finalizing the interim final rule, without change, as published in the **Federal Register** (62 FR 18029, April 14, 1997) will tend to effectuate the declared policy of the Act.

List of Subjects in 7 CFR Part 989

Grapes, Marketing agreements, Raisins, Reporting and recordkeeping requirements.

PART 989—RAISINS PRODUCED FROM GRAPES GROWN IN CALIFORNIA

Accordingly, the interim final rule amending 7 CFR part 989 which was published at 62 FR 18029 on April 14, 1997, is adopted as a final rule without change.

Dated: June 6, 1997.

Eric M. Forman,

Acting Director, Fruit and Vegetable Division.

[FR Doc. 97–15669 Filed 6–13–97; 8:45 am]

BILLING CODE 3410–02–P

DEPARTMENT OF AGRICULTURE

Rural Utilities Service

7 CFR Part 1753

Acceptance Test Policy

AGENCY: Rural Utilities Service, USDA.

ACTION: Direct final rule.

SUMMARY: The Rural Utilities Service (RUS) is publishing a minor amendment to its test acceptance procedures to correct 7 CFR part 1753.39, paragraph (c), to reflect new acceptance tests guidelines covered under RUS Bulletin 1753E–201, Acceptance Tests for Digital, Stored Program Controlled Central Office Equipment.

DATES: This rule will become effective on August 15, 1997 unless we receive written adverse comments or notice of intent to submit adverse comments on or before July 16, 1997. Written comments must be received by RUS, or bear a postmark or equivalent, not later than July 16, 1997. If we receive such comment or notice, we will publish a timely notice in the **Federal Register** stating that the rule will not become effective until we have addressed the comments received and published a final rule. A second public comment period will not be held. Parties interested in commenting on this action should do so at this time.

ADDRESSES: Submit any adverse comments or notice of intent to submit adverse comments to Orren E. Cameron III, Director, Telecommunications Standards Division, Rural Utilities Service, STOP 1598, United States Department of Agriculture, 1400 Independence Ave., SW., Washington, DC 20250–1598. RUS requires, in hard copy, a signed original and three copies of all comments (7 CFR part 1700.30(e)). All comments received will be available for public inspection at Room 2835 (address as above) during regular business hours (7 CFR part 1.27(b)).

FOR FURTHER INFORMATION CONTACT: John J. Schell, Chief, Central Office Equipment Branch, Telecommunications Standards Division, Rural Utilities Service, United States Department of Agriculture, STOP 1598, 1400 Independence Avenue, SW., Washington, DC 20250–1598, telephone number (202) 720–0671.

SUPPLEMENTARY INFORMATION:

Executive Order 12866

This rule has been determined to be not significant for the purposes of Executive Order 12866, Regulatory Planning and Review, and, therefore has not been reviewed by the Office of Management and Budget (OMB).

Regulatory Flexibility Act Certification

The Administrator of RUS has determined that this rule is not a rule as defined in the Regulatory Flexibility Act (5 U.S.C. 601 *et seq.*). Therefore, the Regulatory Flexibility Act does not apply to, this action.

National Environmental Policy Act Certification

The Administrator of RUS has determined that this rule will not significantly affect the quality of the human environment as defined by the National Environmental Policy Act of 1969 (42 U.S.C. 4321 *et seq.*). Therefore, this action does not require an environmental impact statement or assessment.

Executive Order 12372

This rule is excluded from the scope of Executive Order 12372, Intergovernmental Consultation, which may require a consultation with State and local officials. A Notice of Final Rule titled Department Programs and Activities Excluded from Executive Order 12372 (50 FR 47034) exempts RUS telephone loans and loan guarantees from coverage under this Order.

Executive Order 12988

This rule has been reviewed under Executive Order 12988, Civil Justice Reform. RUS has determined that this rule meets the applicable standards provided in Sec. 3. of the Executive Order.

Catalog of Federal Domestic Assistance

The program described by this rule is listed in the Catalog of Federal Domestic Assistance Programs under No. 10.851, Rural Telephone Loans and Loan Guarantees. This catalog is available on a subscription basis from the Superintendent of Documents, the United States Government Printing Office, Washington, DC 20402–9325.

Information Collection and Recordkeeping Requirements

The reporting and recordkeeping burdens contained in this rule were approved by the Office of Management and Budget (OMB) pursuant to the Paperwork Reduction Act of 1995 (44 U.S.C. 35, as amended) under control number 0572–0032.

Background

This action is a minor amendment to add the current bulletin number for acceptance testing guidelines and remove information that is no longer valid.

Need for Correction

As published, the final regulation contains errors which may prove to be misleading and are in need of clarification. As this amendment does not impose additional burden or requirements on the public, this is being published as direct final rulemaking. However, RUS would be pleased to receive comments from interested parties.

List of Subjects in 7 CFR Part 1753

Communications equipment, Loan programs—communications, Reporting and recordkeeping requirements, Rural areas, Telephone.

Accordingly, 7 CFR part 1753 is amended as follows:

PART 1753—TELECOMMUNICATIONS SYSTEMS CONSTRUCTION POLICIES AND PROCEDURES

1. The authority citation for part 1753 continues to read as follows:

Authority: 7 U.S.C. 901 *et seq.*; 7 U.S.C. 1921 *et seq.*; Pub. L. 103–354,108 Stat. 3178 (7 U.S.C. 6941 *et seq.*).

2. Section 1753.39(c) is revised to read as follows:

§ 1753.39 Closeout documents.

* * * * *

(c) *Acceptance tests.* The borrower will perform acceptance tests as part of the partial closeout and final closeout of RUS Contract Form 525. Tests that will demonstrate compliance with the requirements of 7 CFR 1755.522 are contained in RUS Bulletin 1753E–201. Other tests demonstrating compliance will be acceptable. RUS Bulletin 1753E–201 is available from RUS, Program Support and Regulatory Analysis, STOP 1522, 1400 Independence Ave. SW, Washington, DC 20250–1522.

* * * * *

Dated: June 9, 1997.

Jill Long Thompson,

Under Secretary, Rural Development.

[FR Doc. 97–15755 Filed 6–13–97; 8:45 am]

BILLING CODE 3410–15–P

DEPARTMENT OF AGRICULTURE

Rural Utilities Service

7 CFR Part 1786

RIN 0572–AB27

RUS Privatization Demonstration Prepayment Program for the State of Alaska

AGENCY: Rural Utilities Service, USDA.

ACTION: Final rule.

SUMMARY: The 1996 Farm Bill, signed into law on April 4, 1996, repealed Section 311 of the Rural Electrification Act of 1936. Section 311 provided the legal authority for a privatization demonstration program for the State of Alaska. Under that demonstration program, electric and telecommunications borrowers in the state of Alaska could prepay certain RUS loans on favorable terms. Borrowers who prepaid under this demonstration program became ineligible for most types of loans from RUS after the prepayment. Because the Farm Bill repealed the statutory authority, regulations implementing this program have become obsolete. Today's rule removes these obsolete regulations.

EFFECTIVE DATE: This rule is effective June 16, 1997.

FOR FURTHER INFORMATION CONTACT: Sue Arnold, Financial Analyst, U.S. Department of Agriculture, Rural Utilities Service, Room 2230-S, 1400 Independence Avenue, SW., Stop 1522, Washington, DC 20250–1522. Telephone: 202–720–0736. FAX: 202–720–4120. E-mail: sarnold@rus.usda.gov.

SUPPLEMENTARY INFORMATION: The Rural Utilities Service (RUS) is taking this regulatory action as part of an ongoing project to eliminate unnecessary regulations and improve those that remain in force. This regulatory action has been determined not to be significant for the purposes of Executive Order 12866, Regulatory Planning and Review, and, therefore has not been reviewed by the Office of Management and Budget (OMB).

The program described by this rule is listed in the Catalog of Federal Domestic Assistance Programs under numbers 10.850, Rural Electrification Loans and Loan Guarantees, 10.851 Rural Telephone Loans and Loan Guarantees, and 10.852, Rural Telephone Bank Loans. This catalog is available on a subscription basis from the Superintendent of Documents, the United States Government Printing Office, Washington, DC 20402–9325.

Information Collection and Recordkeeping Requirements

This rule contains no information collection or recordkeeping requirements.

Background

On October 30, 1986, an Act Making Continuing Appropriations for Fiscal Year of 1987 and For Other Purposes (Pub.L. 99–591, 100 Stat. 3341–333) added a new section 311 (7 U.S.C. 940a) to the Rural Electrification Act of 1936, as amended (7 U.S.C. 901 *et seq.*), (RE Act). Section 311 established a privatization demonstration program that allowed electric and telecommunications borrowers in the State of Alaska to prepay, under favorable terms, certain loans made or guaranteed by the Rural Electrification Administration (REA), the predecessor to RUS. Borrowers who prepaid under this demonstration program were required to prepay all outstanding loans made or guaranteed under the RE Act, and, with a few exceptions, such borrowers are ineligible for future loans or loan guarantees under the RE Act.

RUS rules implementing the Privatization Demonstration Program for the State of Alaska were issued in 7 CFR 1786 subpart D.

On April 4, 1996, Section 780 of the Federal Agriculture Improvement and Reform Act (Pub.L. 104–127) repealed Section 311. Since RUS no longer has the statutory authority for the Privatization Demonstration Program for the State of Alaska, today's rule removes the now obsolete 7 CFR 1786 subpart D. Prepayment provisions established elsewhere in 7 CFR part 1786, and in other RUS regulations are not affected by today's amendment.

Because statutory authority for the Privatization Demonstration Program for the State of Alaska has been repealed, no period of public comment is needed for this conforming amendment to RUS regulations.

List of Subjects in 7 CFR Part 1786

Accounting, Administrative practice and procedure, Electric utilities.

For the reasons set out in the preamble, and under the authority of the Under Secretary for Rural Development, Title 7 of the Code of Federal Regulations is amended as follows:

PART 1786—PREPAYMENT OF RUS GUARANTEED AND INSURED LOANS TO ELECTRIC AND TELEPHONE BORROWERS

1. The authority citation for part 1786 continues to read as follows:

Authority: 7 U.S.C. 901–950b; Title I, subtitle B, Pub.L. 99–509; Pub.L. 101–624, 104 Stat. 4051; Pub.L. 103–354, 108 Stat. 3178 (7 U.S.C. 6941 *et seq.*), unless otherwise noted.

Subpart D 1786.75 through 1786.86 [Removed and Reserved]

2. Subpart D of Part 1786, consisting of sections 1786.75 through 1786.86, is removed and reserved.

Dated: June 9, 1997.

Jill Long Thompson,

Under Secretary, Rural Development.

[FR Doc. 97–15757 Filed 6–13–97; 8:45 am]

BILLING CODE 3410–15–P

FARM CREDIT ADMINISTRATION

12 CFR Part 617

RIN 3052–AB33

Referral of Known or Suspected Criminal Violations; Effective Date

AGENCY: Farm Credit Administration.

ACTION: Notice of effective date.

SUMMARY: The Farm Credit Administration (FCA) published a final rule under part 617 on May 6, 1997 (62 FR 24562). The final rule amends the regulations governing the referral of known or suspected criminal violations. The objective of this final regulation was to promote consistency, efficiencies, and timeliness by Farm Credit System institutions in reporting, investigating, and aiding in the prosecution of known or suspected criminal activities. In accordance with 12 U.S.C. 2252, the effective date of the final rule is 30 days from the date of publication in the **Federal Register** during which either or both Houses of Congress are in session. Based on the records of the sessions of Congress, the effective date of the regulations is June 13, 1997.

EFFECTIVE DATE: The regulation amending 12 CFR part 617 published on May 6, 1997 (62 FR 24562) is effective June 13, 1997.

FOR FURTHER INFORMATION CONTACT:

Eric Howard, Policy Analyst, Policy Development and Risk Control, Farm Credit Administration, McLean, VA 22102–5090, (703) 883–4498; or

Jane Virga, Senior Attorney, Office of General Counsel, Farm Credit Administration, McLean, VA 22102–5090, (703) 883–4020, TDD (703) 883–4444.

(12 U.S.C. 2252(a) (9) and (10))

Dated: June 11, 1997.

Floyd Fithian,

Secretary, Farm Credit Administration Board.

[FR Doc. 97–15725 Filed 6–13–97; 8:45 am]

BILLING CODE 6750–01–P

DEPARTMENT OF TRANSPORTATION

Federal Aviation Administration

14 CFR Part 71

[Airspace Docket No. 97–AWP–19]

Amendment of Class E Airspace; Santa Ynez, CA

AGENCY: Federal Aviation Administration (FAA), DOT.

ACTION: Final rule.

SUMMARY: This action amends the Class E airspace area at Santa Ynez, CA. The development of a Global Positioning System (GPS–A) Standard Instrument Approach Procedure (SIAP) at Santa Ynez Airport has made this action necessary. The intended effect of this action is to provide adequate controlled airspace for Instrument Flight Rules (IFR) operations at Santa Ynez Airport, Santa Ynez, CA.

EFFECTIVE DATE: 0901 UTC July 17, 1997.

FOR FURTHER INFORMATION CONTACT:

Larry Tonish, Airspace Specialist, Airspace Branch, AWP–520, Air Traffic Division, Western-Pacific Region, Federal Aviation Administration, 15000 Aviation Boulevard, Lawndale, California 90261, telephone (310) 725–6555.

SUPPLEMENTARY INFORMATION:

History

On April 22, 1997, the FAA proposed to amend part 71 of the Federal Aviation Regulations (14 CFR part 71) by amending the Class E airspace area at Santa Ynez, CA (62 FR 19529). This action will provide adequate controlled airspace to accommodate a GPS–A SIAP to Santa Ynez Airport, Santa Ynez, CA.

Interested parties were invited to participate in this rulemaking proceeding by submitting written comments on the proposal to the FAA. No comments to the proposal were received. Class E airspace designations are published in paragraph 6005 of FAA Order 7400.9D dated September 4, 1996, and effective September 16, 1996, which is incorporated by reference in 14 CFR 71.1. The Class E airspace designations listed in this document will be published subsequently in this Order.

The Rule

This amendment to part 71 of the Federal Aviation Regulations (14 CFR part 71) amends the Class E airspace area at Santa Ynez, CA. The development of a GPS–A SIAP made this action necessary. The effect of this action will provide adequate airspace for aircraft executing the GPS–A SIAP at Santa Ynez Airport, Santa Ynez, CA.

The FAA has determined that this regulation only involves an established body of technical regulations for which frequent and routine amendments are necessary to keep them operationally current. Therefore, this regulation (1) is not a ''significant regulatory action'' under Executive Order 12866; (2) is not a ''significant rule'' under DOT Regulatory Policies and Procedures (44 FR 10034; February 26, 1979); and (3) does not warrant preparation of a Regulatory Evaluation as the anticipated impact is so minimal. Since this is a routine matter that will only affect air traffic procedures and air navigation, it is certified that this rule will not have a significant economic impact on a substantial number of small entities under the criteria of the Regulatory Flexibility Act.

List of Subjects in 14 CFR Part 71

Airspace, Incorporation by reference, Navigation (air).

Adoption of the Amendment

In consideration of the foregoing, the Federal Aviation Administration amends 14 CFR part 71 as follows:

PART 71—[AMENDED]

1. The authority citation for 14 CFR part 71 continues to read as follows:

Authority: 49 U.S.C. 106(g), 40103, 40113, 40120; E.O. 10854, 24 FR 9565, 3 CFR, 1959–1963 Comp., p. 389; 14 CFR 11.69.

§ 71.1 [Amended]

2. The incorporation by reference in 14 CFR 71.1 of the Federal Aviation Administration Order 7400.9D, Airspace Designations and Reporting Points, dated September 4, 1996, and effective September 16, 1996, is amended as follows:

Paragraph 6005 Class E airspace area extending upward from 700 feet or more above the surface of the earth.

* * * * *

AWP CA E5 Santa Ynez, CA [Revised]

Santa Ynez Airport, CA
(lat. 34°36′25″ N, long. 120°04′32″ W)

That airspace extending upward from 700 feet above the surface beginning at lat. 34°33′24″ N, long. 120°00′50″ W; to lat. 34°29′00″ N, long. 120°06′04″ W; to lat. 34°29′00″ N, long. 120°12′24″ W; to lat. 34°37′10″ N, long. 120°22′34″ W; to lat. 34°45′40″ N, long 120°18′44″ W; to lat. 34°40′25″ N, long. 120°02′37″ W, thence clockwise along the 4.3-mile radius of the Santa Ynez Airport to the point of beginning and within 4.5 miles northeast and 2 miles southwest of the 111° bearing from the Santa Ynez Airport, extending from the 4.3-mile radius to 15 miles southeast of the Santa Ynez Airport, excluding that portion within Santa Barbara, CA, Class C and E airspace areas.

* * * * *

Issued in Los Angeles, California, on June 2, 1997.

Sabra W. Kaulia,

Assistant Manager, Air Traffic Division, Western-Pacific Region.

[FR Doc. 97–15691 Filed 6–13–97; 8:45 am]

BILLING CODE 4910–13–M

DEPARTMENT OF HEALTH AND HUMAN SERVICES

Food and Drug Administration

21 CFR Part 312

[Docket No. 97N–0223]

Investigational New Drug Application; Exception from Informed Consent; Technical Amendment

AGENCY: Food and Drug Administration, HHS.

ACTION: Final rule.

SUMMARY: The Food and Drug Administration (FDA) is amending its investigational new drug application (IND) regulations to clarify that, within 30 days after the receipt of an IND for any clinical investigation involving an exception from informed consent, FDA will provide a written determination as to whether the investigation may begin. This action is intended to clarify a recent amendment to the IND regulations for clinical investigations involving an exception from informed consent that states that FDA will provide a written authorization within 30 days of receipt of the IND.

EFFECTIVE DATE: June 23, 1997.

FOR FURTHER INFORMATION CONTACT: David LePay, Center for Drug Evaluation and Research (HFD–340), Food and Drug Administration, 7520 Standish Pl., Rockville, MD 20855, 301–594–0020.

SUPPLEMENTARY INFORMATION: In the **Federal Register** of October 2, 1996 (61 FR 51498), FDA amended its regulations by adding § 50.24 (21 CFR 50.24) to provide a narrow exception from informed consent requirements for a limited class of emergency research. Under the amendments, certain research activities involving human subjects who are in need of emergency medical intervention, but who cannot give informed consent because of their life-threatening medical condition, and who do not have a legally authorized person to represent them, may be exempt from the informed consent requirements.

The October 2, 1996, final rule also amended the IND regulations at § 312.20(c) by adding paragraph (c) (21 CFR 312.20(c)), which requires a sponsor to submit a separate IND for any clinical investigation involving an exception from informed consent under § 50.24. This requirement is to ensure that FDA has an opportunity to review the protocol and supporting information before the investigation begins. Section 312.20(c) also provides that the clinical investigation may not proceed without the prior written authorization from FDA. The requirement for written authorization is to document that the agency has reviewed the protocol and supporting information and has agreed that the investigation may proceed. To enable sponsors to begin these investigations as expeditiously as possible, current § 312.20 (c) also states that ''FDA shall provide such written authorization 30 days after FDA receives the IND or earlier.''

Current IND regulations at § 312.40(b) (21 CFR 312.40(b)) state that an IND goes into effect 30 days after FDA receives the IND or upon earlier notification by FDA that the investigations may begin, unless FDA notifies the sponsor that the investigations are subject to a clinical hold. Thus, under current IND regulations, FDA may grant or deny permission for the investigations to begin, within 30 days after it receives an IND. The statement in § 312.20(c) that ''FDA shall provide such written authorization 30 days after FDA receives the IND or earlier''suggests that the agency may only grant permission for the investigations to begin. To correct this unintended meaning, FDA is amending the last sentence in § 312.20(c) to state that ''FDA shall provide a written determination 30 days after FDA receives the IND or earlier.''

Because this amendment is nonsubstantive and is intended only to provide consistency with current IND regulations, FDA finds for good cause that notice and public procedure and delayed effective date are unnecessary (5 U.S.C. 553(b)(B) and (d)).

List of Subjects in 21 CFR Part 312

Drugs, Exports, Imports, Investigations, Labeling, Medical research, Reporting and recordkeeping requirements, Safety.

Therefore, under the Federal Food, Drug, and Cosmetic Act and under authority delegated to the Commissioner of Food and Drugs, 21 CFR part 312 is amended as follows:

PART 312—INVESTIGATIONAL NEW DRUG APPLICATION

1. The authority citation for 21 CFR part 312 continues to read as follows:

Authority: Secs. 201, 301, 501, 502, 503, 505, 506, 507, 701 of the Federal Food, Drug, and Cosmetic Act (21 U.S.C 321, 331, 351, 352, 353, 355, 356, 357, 371); sec. 351 of the Public Health Service Act (42 U.S.C. 262).

Section 312.20 is amended by revising the last sentence of paragraph (c) to read as follows:

§ 312.20 Requirement for an IND.

* * * * *

(c) * * * FDA shall provide a written determination 30 days after FDA receives the IND or earlier.

Dated: June 10, 1997.

William K. Hubbard,

Associate Commissioner for Policy Coordination.

[FR Doc. 97–15759 Filed 6–13–97; 8:45 am]

BILLING CODE 4160–01–F

CENTRAL INTELLIGENCE AGENCY

32 CFR Parts 1900, 1901, 1907, 1908, and 1909

Freedom of Information Act; Privacy Act; and Executive Order 12958; Implementation

AGENCY: Central Intelligence Agency.

ACTION: Interim Rule.

SUMMARY: The Central Intelligence Agency is hereby promulgating interim rules and soliciting comments prior to adoption of final rules to implement its obligations under the Freedom of Information Act, the Privacy Act, and Executive Order 12958 (or successor Orders) provisions relating to classification challenges by authorized holders, requests for mandatory

declassification review, and access by historical researchers.

DATES: The interim rules are effective May 29, 1997. Public comments are solicited for the interim rules on or before July 28, 1997.

ADDRESSES: Comments may be submitted to the Information and Privacy Coordinator, Central Intelligence Agency, Washington, DC 20505.

FOR FURTHER INFORMATION CONTACT: Lee S. Strickland, Information and Privacy Coordinator, Central Intelligence Agency, Washington, DC 20505; telephone (703) 613–1287; facsimile (703) 613–3007.

SUPPLEMENTARY INFORMATION: On December 8, 1987, the CIA published in the **Federal Register** the most recent regulations governing public access to its documents and records and its handling of declassification requests. See 32 Code of Federal Regulations (CFR) Chapter XIX parts 1900 and 1901.

This document promulgates interim rules and seeks public comment prior to adoption of a final rule. These rules do not alter substantially any existing rights of members of the public. Rather, certain changes were required, in light of changes in the applicable laws or judicial decisions, in order to clarify provisions that have proven confusing to requesters and to improve the processing of requests. In addition, the Agency is pleased to announce that all sections of the regulations have been rewritten in standard, conversational English. These revisions should greatly enhance the public's understanding of the regulations. The more significant changes are summarized below and the rules in their entirety are set forth in the following sections.

In the Part 1900 Regulations Implementing the Freedom of Information Act

(a) All provisions relating to requests under the Executive Order on classification are removed from part 1900 and codified together in new parts 1907, 1908, and 1909 for greater clarity;

(b) The section entitled *''Definitions''* is amended to include additional terms common to the processing of FOIA requests and to expand the definition of news media to include foreign media having a substantial impact on the American public's understanding of the operations or activities of the United States Government; see *Southam News* v. *Immigration and Naturalization Service,* 674 F. Supp. 881, 882 (D.D.C. 1987) and 32 CFR 1900.02;

(c) The section now entitled *''Contact for general information and requests''* is amended to indicate that the Agency will accept facsimile requests and inquiries; see 32 CFR 1900.03;

(d) The subsections relating to fee waivers are amended to broaden the time a requester may seek a fee waiver or appeal an initial denial of a fee waiver and to permit the processing of a request during the pendancy of a request or appeal, provided that the requester commits to payment of fees in the event of an adverse decision; see 32 CFR 1900.13(b)-(d);

(e) The subsection relating to our schedule of fees is amended in part to reflect current costs and to be more consistent with other federal agencies; personnel costs reflect current average grades and salaries, reproduction costs reflect equipment and personnel costs, and computer costs are unchanged since improvements in capability have generally negated increases in costs; see 32 CFR 1900.13(g);

(f) A new section entitled *''Procedures for information concerning other persons''* is added to reflect the established guidelines utilized by the Agency in the past to address such information and to reflect judicial determinations in this regard; *see, e.g., Beck* v. *Department of Justice,* 997 F.2d 1489, 1492–94 (D.C. Cir. 1993), *The Nation Magazine* v. *Department of State,* Civ. No. 92–2303 (D.D.C. 18 August 1995), and 32 CFR 1900.32;

(g) A new section relating to expedited processing is added; the first subsection concerning requests for expedited processing prior to October 2, 1997 reflects the established guidelines adopted and utilized by the Agency in the past to consider such requests; see 32 CFR 1900.34(b); the second subsection concerning requests for expedited processing on or after October 2, 1997 reflects new statutory provisions set forth in the Electronic Freedom of Information Act Amendments of 1996; see 32 CFR 1900.34(c);

(h) All sections relating to administrative appeals and the CIA Information Review Committee (IRC) are amended to reflect a change of name to the Historical Records Policy Board (HRPB) and a change of membership by inclusion of the Executive Director, the General Counsel, the Director of Congressional Affairs, the Director of the Public Affairs Staff, the Director, Center for the Study of Intelligence, and the Associate Deputy Director for Administration/Information Services, or their designees, and a corresponding deletion of the Inspector General; see 32 CFR 1900.41;

(i) Those sections relating to administrative appeals are also amended to reflect the creation of a new administrative review body, the Agency Release Panel (ARP), subordinate to the HRPB, in order to provide an Agency-wide perspective to the information review and release process and to reduce the time required for the processing of appeals; ee 32 CFR 1900.41 and 32 CFR 1900.44; and

(j) The section now entitled *''Right of appeal and appeal procedures''* is amended to provide that appeals are accepted from requesters who have received a determination that no records were located; see *Oglesby* v. *Department of the Army,* 920 F.2d 57, 67 (D.C. Cir. 1990) and 32 CFR 1900.42(a).

In the Part 1901 Regulations Implementing the Privacy Act

(a) the section entitled *''Definitions''* is amended to include additional terms common to the processing of Privacy Act requests and to reflect a redesignation under the Freedom of Information Reform Act of 1986, Pub. L. 99–570 section 1802(b); see 32 CFR 1901.02;

(b) The section now entitled *''Contact for general information and requests''* is amended to reflect that Privacy Act requests with the required identification statement must be filed in original form by mail, but that subsequent communications and inquiries will be accepted by facsimile; ee 32 CFR 1901.03;

(c) The section now entitled *''Requirements as to form''* is clarified so that it applies clearly to both requests for copies of records and requests to amend records; see 32 CFR 1901.12;

(d) The section now entitled *''Requirements as to identification of requester''* is clarified for requests concerning children, broadened to address requests by attorneys on behalf of clients, and further amended to permit any request to be made under a penalty of perjury declaration pursuant to 28 U.S.C. 1746 in addition to the more familiar notarization procedure; see *Summers* v. *Department of Justice,* 999 F.2d 570, 572–73 (D.C. Cir. 1993) and 32 CFR 1901.13;

(e) The section now entitled *''Special procedures for medical and psychological records''* is amended to conform the release of these types of records to the requester's designated physician who has agreed to (1) Review the records with the requesting individual, (2) explain the meaning of the records, and (3) offer counseling designed to temper any adverse reaction; see *Benavides* v. *Bureau of Prisons,* 995 F. 2d 269, 272 (D.C. Cir. 1993) and 32 CFR 1901.31;

(f) A new section entitled *''Requests for expedited processing''* is added to

reflect the established guidelines adopted and utilized by the Agency in the past to consider such requests; see 32 CFR 1901.32;

(g) All sections relating to administrative appeals and the CIA Information Review Committee (IRC) are amended to reflect a change of name to the Historical Records Policy Board (HRPB) and a change of membership by inclusion of the Executive Director, the General Counsel, the Director of Congressional Affairs, the Director of the Public Affairs Staff, the Director, Center for the Study of Intelligence, and the Associate Deputy Director for Administration/Information Services, or their designees, and a corresponding deletion of the Inspector General; see 32 CFR 1901.41 through 32 CFR 1901.45;

(h) Those sections relating to administrative appeals are also amended to reflect the creation of a new administrative review body, the Agency Release Panel (ARP), subordinate to the HRPB, in order to provide an Agency-wide perspective to the information review and release process and to reduce the time required for the processing of appeals; see 32 CFR 1901.41 through 32 CFR 1901.45;

(i) The section now entitled *''Limitations on disclosure''* is amended to regulate disclosures not only to another person but also to another federal agency or other authorized entity; see 32 CFR 1901.51;

(j) The section entitled *''Criminal penalties''* is amended to authorize the Coordinator and the Inspector General to conduct surveys to ensure that no records or file systems are maintained in contravention of the Privacy Act; see 32 CFR 1901.52;

(k) The sections entitled *''Purpose and authority''* and *''General exemptions''* are amended to add new subsections to implement section 17 of the CIA Act of 1949, as amended, 50 U.S.C. 403q(e)(3) which provides a general exemption for the identity of individuals providing information to the Inspector General of the CIA; see 32 CFR 1901.61(d) and 32 CFR 1901.62(d)(3); and

(l) All sections relating to exemptions are now grouped together for convenience and clarity; see 32 CFR 1901.62.

In the New Part 1907 Regulations Implementing the § 1.9 ''Classification Challenges'' Provisions of Executive Order 12958

This new part is intended to implement the provisions of § 1.9 of Executive Order (E.O.) 12958 which permits authorized holders of classified information to challenge the classified status of that information. This provision and these regulations confer no rights upon members of the general public who shall continue to request reviews of classification under the Mandatory Declassification Review provisions set forth at § 3.6 of E.O. 12958 and at 32 CFR part 1908.

In the New Part 1908 Regulations Implementing the § 3.6 ''Mandatory Declassification Review'' Provisions of Executive Order 12958

This new Part is intended to implement the provisions of § 3.6 of Executive Order (E.O.) 12958 which permits members of the public to request a declassification review of any information classified under this or predecessor orders. While substantially similar to the regulations implementing this provision in prior Orders, it does include new sections addressing the right of appeal to the new Interagency Security Classification Appeals Panel which was established pursuant to § 5.4 of E.O. 12958. This Executive Order provision and these regulations do not create any right or benefit, substantive or procedural, enforceable at law by a party against the United States, its agencies, officers, or employees.

Lastly, in the New Part 1909 Regulations Implementing the § 4.5 ''Access by Historical Researchers and Former Presidential Appointees'' Provision of Executive Order 12958

This new part is intended to implement the provisions of § 4.5 of Executive Order (E.O.) 12958 which provides a waiver of the need-to-know principle in limited circumstances for historical researchers and former Presidential appointees. These rules are substantially similar to those implementing this provision in prior Orders. These rules do not create any right or benefit, substantive or procedural, enforceable at law by a party against the United States, its agencies, officers, or employees. The decision of the Agency in this regard is final.

List of Subjects in 32 CFR Parts 1900, 1901, 1907, 1908, and 1909

Central Intelligence Agency, Executive Order on Classification, Freedom of Information Act, Privacy Act.

Dated: May 29, 1997.

Richard D. Calder,

Deputy Director for Administration.

For the reasons set forth herein, the CIA hereby revises Parts 1900, 1901, 1907 and adds Parts 1908 and 1909 as follows:

PART 1900—PUBLIC ACCESS TO CIA RECORDS UNDER THE FREEDOM OF INFORMATION ACT (FOIA)

General

Sec.
1900.01 Authority and purpose.
1900.02 Definitions.
1900.03 Contact for general information and requests.
1900.04 Suggestions and complaints.

Filing of FOIA Requests

1900.11 Preliminary information.
1900.12 Requirements as to form and content.
1900.13 Fees for record services.
1900.14 Fee estimates (pre-request option).

CIA Action on FOIA Requests

1900.21 Processing of requests for records.
1900.22 Action and determination(s) by originator(s) or any interested party.
1900.23 Payment of fees, notification of decision, and right of appeal.

Additional Administrative Matters

1900.31 Procedures for business information.
1900.32 Procedures for information concerning other persons.
1900.33 Allocation of resources; agreed extensions of time.
1900.34 Requests for expedited processing.

CIA Action on FOIA Administrative Appeals

1900.41 Establishment of appeals structure.
1900.42 Right of appeal and appeal procedures.
1900.43 Determination(s) by Deputy Director(s).
1900.44 Action by appeals authority.
1900.45 Notification of decision and right of judicial review.

Authority: National Security Act of 1947, as amended; Central Intelligence Agency Act of 1949, as amended; Freedom of Information Act, as amended; CIA Information Act of 1984; and Executive Order 12958 , 60 FR 19825, 3 CFR 1996 Comp., p. 333–356 (or successor Orders).

General

§ 1900.01 Authority and purpose.

This part is issued under the authority of and in order to implement the Freedom of Information Act (FOIA), as amended (5 U.S.C. 552); the CIA Information Act of 1984 (50 U.S.C. 431); sec. 102 of the National Security Act of 1947, as amended (50 U.S.C. 403); and sec. 6 of the Central Intelligence Agency Act of 1949, as amended (50 U.S.C. 403g). It prescribes procedures for:

(a) Requesting information on available CIA records, or the CIA administration of the FOIA, or estimates of fees that may become due as a result of a request;

(b) Requesting records pursuant to the FOIA; and

(c) Filing an administrative appeal of an initial adverse decision under the FOIA.

§ 1900.02 Definitions.

For purposes of this part, the following terms have the meanings indicated:

(a) *Agency* or *CIA* means the United States Central Intelligence Agency acting through the CIA Information and Privacy Coordinator;

(b) *Days* means calendar days when the Agency is operating and specifically excludes Saturdays, Sundays, and legal public holidays. Three (3) days may be added to any time limit imposed on a requester by this part if responding by U.S. domestic mail; ten (10) days may be added if responding by international mail;

(c) *Control* means ownership or the authority of the CIA pursuant to federal statute or privilege to regulate official or public access to records;

(d) *Coordinator* means the CIA Information and Privacy Coordinator who serves as the Agency manager of the information review and release program instituted under the Freedom of Information Act;

(e) *Direct costs* means those expenditures which an agency actually incurs in the processing of a FOIA request; it does not include overhead factors such as space; it does include:

(1) *Pages* means paper copies of standard office size or the dollar value equivalent in other media;

(2) *Reproduction* means generation of a copy of a requested record in a form appropriate for release;

(3) *Review* means all time expended in examining a record to determine whether any portion must be withheld pursuant to law and in effecting any required deletions but excludes personnel hours expended in resolving general legal or policy issues; it also means personnel hours of professional time;

(4) *Search* means all time expended in looking for and retrieving material that may be responsive to a request utilizing available paper and electronic indices and finding aids; it also means personnel hours of professional time or the dollar value equivalent in computer searches;

(f) *Expression of interest* means a written communication submitted by a member of the public requesting information on or concerning the FOIA program and/or the availability of documents from the CIA;

(g) *Federal agency* means any executive department, military department, or other establishment or entity included in the definition of agency in 5 U.S.C. 552(f);

(h) *Fees* means those direct costs which may be assessed a requester considering the categories established by the FOIA; requesters should submit information to assist the Agency in determining the proper fee category and the Agency may draw reasonable inferences from the identity and activities of the requester in making such determinations; the fee categories include:

(1) *Commercial* means a request in which the disclosure sought is primarily in the commercial interest of the requester and which furthers such commercial, trade, income or profit interests;

(2) *Non-commercial educational or scientific institution* means a request from an accredited United States educational institution at any academic level or institution engaged in research concerning the social, biological, or physical sciences or an instructor or researcher or member of such institutions; it also means that the information will be used in a specific scholarly or analytical work, will contribute to the advancement of public knowledge, and will be disseminated to the general public;

(3) *Representative of the news media* means a request from an individual actively gathering news for an entity that is organized and operated to publish and broadcast news to the American public and pursuant to their news dissemination function and not their commercial interests; the term *news* means information which concerns current events, would be of current interest to the general public, would enhance the public understanding of the operations or activities of the U.S. Government, and is in fact disseminated to a significant element of the public at minimal cost; freelance journalists are included in this definition if they can demonstrate a solid basis for expecting publication through such an organization, even though not actually employed by it; a publication contract or prior publication record is relevant to such status;

(4) *All other* means a request from an individual not within paragraph (h)(1), (2), or (3) of this section;

(i) *Freedom of Information Act* or ''FOIA'' means the statutes as codified at 5 U.S.C. 552;

(j) *Interested party* means any official in the executive, military, congressional, or judicial branches of government, United States or foreign, or U.S. Government contractor who, in the sole discretion of the CIA, has a subject matter or physical interest in the documents or information at issue;

(k) *Originator* means the U.S. Government official who originated the document at issue or successor in office or such official who has been delegated release or declassification authority pursuant to law;

(l) *Potential requester* means a person, organization, or other entity who submits an expression of interest;

(m) *Reasonably described records* means a description of a document (record) by unique identification number or descriptive terms which permit an Agency employee to locate documents with reasonable effort given existing indices and finding aids;

(n) *Records* or *agency records* means all documents, irrespective of physical or electronic form, made or received by the CIA in pursuance of federal law or in connection with the transaction of public business and appropriate for preservation by the CIA as evidence of the organization, functions, policies, decisions, procedures, operations, or other activities of the CIA or because of the informational value of the data contained therein; it does not include:

(1) *Books, newspapers, magazines, journals, magnetic or printed transcripts of electronic broadcasts, or similar public sector materials* acquired generally and/or maintained for library or reference purposes; to the extent that such materials are incorporated into any form of analysis or otherwise distributed or published by the Agency, they are fully subject to the disclosure provisions of the FOIA;

(2) *Index, filing, or museum documents* made or acquired and preserved solely for reference, indexing, filing, or exhibition purposes; and

(3) *Routing and transmittal sheets and notes and filing or destruction notes* which do not also include information, comment, or statements of substance;

(o) *Responsive records* means those documents (i.e., records) which the Agency has determined to be within the scope of a FOIA request.

§ 1900.03 Contact for general information and requests.

For general information on this part, to inquire about the FOIA program at CIA, or to file a FOIA request (or expression of interest), please direct your communication in writing to the Information and Privacy Coordinator, Central Intelligence Agency, Washington, DC 20505. Such inquiries will also be accepted by facsimile at (703) 613–3007. For general information or status information on pending cases only, the telephone number is (703)

613–1287. Collect calls cannot be accepted.

§ 1900.04 Suggestions and complaints.

The Agency welcomes suggestions or complaints with regard to its administration of the Freedom of Information Act. Many requesters will receive pre-paid, customer satisfaction survey cards. Letters of suggestion or complaint should identify the specific purpose and the issues for consideration. The Agency will respond to all substantive communications and take such actions as determined feasible and appropriate.

Filing of FOIA Requests

§ 1900.11 Preliminary Information.

Members of the public shall address all communications to the CIA Coordinator as specified at 32 CFR 1900.03 and clearly delineate the communication as a request under the Freedom of Information Act and this regulation. CIA employees receiving a communication in the nature of a FOIA request shall expeditiously forward same to the Coordinator. Requests and appeals on requests, referrals, or coordinations received from members of the public who owe outstanding fees for information services at this or other federal agencies will not be accepted and action on all pending requests shall be terminated in such circumstances.

§ 1900.12 Requirements as to form and content.

(a) *Required information.* No particular form is required. A request need only reasonably describe the records of interest. This means that documents must be described sufficiently to enable a professional employee familiar with the subject to locate the documents with a reasonable effort. Commonly this equates to a requirement that the documents must be locatable through the indexing of our various systems. Extremely broad or vague requests or requests requiring research do not satisfy this requirement.

(b) *Additional information for fee determination.* In addition, a requester should provide sufficient personal identifying information to allow us to determine the appropriate fee category. A requester should also provide an agreement to pay all applicable fees or fees not to exceed a certain amount or request a fee waiver.

(c) *Otherwise.* Communications which do not meet these requirements will be considered an expression of interest and the Agency will work with, and offer suggestions to, the potential requester in order to define a request properly.

§ 1900.13 Fees for record services.

(a) *In general.* Search, review, and reproduction fees will be charged in accordance with the provisions below relating to schedule, limitations, and category of requester. Applicable fees will be due even if our search locates no responsive records or some or all of the responsive records must be denied under one or more of the exemptions of the Freedom of Information Act.

(b) *Fee waiver requests.* Records will be furnished without charge or at a reduced rate whenever the Agency determines:

(1) That, as a matter of administrative discretion, the interest of the United States Government would be served, or

(2) That it is in the public interest because it is likely to contribute significantly to the public understanding of the operations or activities of the United States Government and is not primarily in the commercial interest of the requester; the Agency shall consider the following factors when making this determination:

(i) Whether the subject of the request concerns the operations or activities of the United States Government; and, if so,

(ii) Whether the disclosure of the requested documents is likely to contribute to an understanding of United States Government operations or activities; and, if so,

(iii) Whether the disclosure of the requested documents will contribute to public understanding of United States Government operations or activities; and, if so,

(iv) Whether the disclosure of the requested documents is likely to contribute significantly to public understanding of United States Government operations and activities; and

(v) Whether the requester has a commercial interest that would be furthered by the requested disclosure; and, if so,

(vi) Whether the disclosure is primarily in the commercial interest of the requester.

(c) *Fee waiver appeals.* Denials of requests for fee waivers or reductions may be appealed to the Chair of the Agency Release Panel via the Coordinator. A requester is encouraged to provide any explanation or argument as to how his or her request satisfies the statutory requirement set forth above.

(d) *Time for fee waiver requests and appeals.* It is suggested that such requests and appeals be made and resolved prior to the initiation of processing and the incurring of costs. However, fee waiver requests will be accepted at any time prior to the release of documents or the completion of a case, and fee waiver appeals within forty-five (45) days of our initial decision subject to the following condition: If processing has been initiated, then the requester must agree to be responsible for costs in the event of an adverse administrative or judicial decision.

(e) *Agreement to pay fees.* In order to protect requesters from large and/or unanticipated charges, the Agency will request specific commitment when it estimates that fees will exceed $100.00. The Agency will hold in abeyance for forty-five (45) days requests requiring such agreement and will thereafter deem the request closed. This action, of course, would not prevent an individual from refiling his or her FOIA request with a fee commitment at a subsequent date.

(f) *Deposits.* The Agency may require an advance deposit of up to 100 percent of the estimated fees when fees may exceed $250.00 and the requester has no history of payment, or when, for fees of any amount, there is evidence that the requester may not pay the fees which would be accrued by processing the request. The Agency will hold in abeyance for forty-five (45) days those requests where deposits have been requested.

(g) *Schedule of fees*—(1) *In general.* The schedule of fees for services performed in responding to requests for records is established as follows:

Personnel Search and Review		
Clerical/Technical	Quarter hour	$5.00
Professional/Supervisory.	Quarter hour	10.00
Manager/Senior Professional.	Quarter hour	18.00

Computer Search and Production		
Search (on-line)	Flat rate	10.00
Search (off-line)	Flat rate	30.00
Other activity	Per minute	10.00
Tapes (mainframe cassette).	Each	9.00
Tapes (mainframe cartridge).	Each	9.00
Tapes (mainframe reel).	Each	20.00
Tapes (PC 9mm)	Each	25.00
Diskette (3.5″)	Each	4.00
CD (bulk recorded).	Each	10.00
CD (recordable)	Each	20.00
Telecommunications.	Per minute	.50
Paper (mainframe printer).	Per page	.10
Paper (PC b&w laser printer).	Per page	.10
Paper (PC color printer).	Per page	1.00

Paper Production		
Photocopy (standard or legal).	Per page	.10
Microfiche	Per frame	.20
Pre-printed (if available).	Per 100 pages.	5.00
Published (if available).	Per item	NTIS

(2) *Application of schedule.* Personnel search time includes time expended in either manual paper records searches, indices searches, review of computer search results for relevance, personal computer system searches, and various reproduction services. In any event where the actual cost to the Agency of a particular item is less than the above schedule (e.g., a large production run of a document resulted in a cost less than $5.00 per hundred pages), then the actual lesser cost will be charged. Items published and available at the National Technical Information Service (NTIS) are also available from CIA pursuant to this part at the NTIS price as authorized by statute.

(3) *Other services.* For all other types of output, production, or reproduction (e.g., photographs, maps, or published reports), actual cost or amounts authorized by statute. Determinations of actual cost shall include the commercial cost of the media, the personnel time expended in making the item to be released, and an allocated cost of the equipment used in making the item, or, if the production is effected by a commercial service, then that charge shall be deemed the actual cost for purposes of this part.

(h) *Limitations on collection of fees.*—(1) *In general.* No fees will be charged if the cost of collecting the fee is equal to or greater than the fee itself. That cost includes the administrative costs to the Agency of billing, receiving, recording, and processing the fee for deposit to the Treasury Department and, as of the date of these regulations, is deemed to be $10.00.

(2) *Requests for personal information.* No fees will be charged for requesters seeking records about themselves under the FOIA; such requests are processed in accordance with both the FOIA and the Privacy Act in order to ensure the maximum disclosure without charge.

(i) *Fee categories.* There are four categories of FOIA requesters for fee purposes: ''*Commercial use*'' requesters, ''*educational and non-commercial scientific institution*'' requesters, ''*representatives of the news media*'' requesters, and ''*all other*'' requesters. The categories are defined in § 1900.02, and applicable fees, which are the same in two of the categories, will be assessed as follows:

(1) ''*Commercial use*'' requesters: Charges which recover the full direct costs of searching for, reviewing, and duplicating responsive records (if any);

(2) ''*Educational and non-commercial scientific institution*'' requesters as well as ''*representatives of the news media*'' requesters: Only charges for reproduction beyond the first 100 pages;

(3) ''*All other*'' requesters: Charges which recover the full direct cost of searching for and reproducing responsive records (if any) beyond the first 100 pages of reproduction and the first two hours of search time which will be furnished without charge.

(j) *Associated requests.* A requester or associated requesters may not file a series of multiple requests, which are merely discrete subdivisions of the information actually sought for the purpose of avoiding or reducing applicable fees. In such instances, the Agency may aggregate the requests and charge the applicable fees.

§ 1900.14 Fee estimates (pre-request option).

In order to avoid unanticipated or potentially large fees, a requester may submit a request for a fee estimate. The Agency will endeavor within ten (10) days to provide an accurate estimate, and, if a request is thereafter submitted, the Agency will not accrue or charge fees in excess of our estimate without the specific permission of the requester. Effective October 2, 1997, the ten (10) day provision is modified to twenty (20) days pursuant to the Electronic Freedom of Information Act Amendments of 1996.

CIA Action on FOIA Requests

§ 1900.21 Processing of requests for records.

(a) *In general.* Requests meeting the requirements of §§ 1900.11 through 1900.13 shall be accepted as formal requests and processed under the Freedom of Information Act, 5 U.S.C. 552, and these regulations. Upon receipt, the Agency shall within ten (10) days record each request, acknowledge receipt to the requester in writing, and thereafter effect the necessary taskings to the CIA components reasonably believed to hold responsive records. Effective October 2, 1997, the ten (10) day provision is modified to twenty (20) days pursuant to the Electronic Freedom of Information Act Amendments of 1996.

(b) *Database of ''officially released information.''* As an alternative to extensive tasking and as an accommodation to many requesters, the Agency maintains a database of ''officially released information'' which contains copies of documents released by this Agency. Searches of this database, containing currently in excess of 500,000 pages, can be accomplished expeditiously. Moreover, requests that are specific and well-focused will often incur minimal, if any, costs. Requesters interested in this means of access should so indicate in their correspondence. Effective November 1, 1997 and consistent with the mandate of the Electronic Freedom of Information Act Amendments of 1996, on-the public. Detailed information regarding such access will line electronic access to these records will be available to be available at that time from the point of contact specified in § 1900.03.

(c) *Effect of certain exemptions.* In processing a request, the Agency shall decline to confirm or deny the existence or nonexistence of any responsive records whenever the fact of their existence or nonexistence is itself classified under Executive Order 12958 or revealing of intelligence sources and methods protected pursuant to section 103(c)(5) of the National Security Act of 1947. In such circumstances, the Agency, in the form of a final written response, shall so inform the requester and advise of his or her right to an administrative appeal.

(d) *Time for response.* The Agency will utilize every effort to determine within the statutory guideline of ten (10) days after receipt of an initial request whether to comply with such a request. However, the current volume of requests require that the Agency seek additional time from a requester pursuant to 32 CFR 1900.33. In such event, the Agency will inform the requester in writing and further advise of his or her right to file an administrative appeal of any adverse determination. Effective October 2, 1997, the ten (10) day provision is modified to twenty (20) days pursuant to the Electronic Freedom of Information Act Amendments of 1996.

§ 1900.22 Action and determination(s) by originator(s) or any interested party.

(a) *Initial action for access.* CIA components tasked pursuant to a FOIA request shall search all relevant record systems within their cognizance which have not been excepted from search by the provisions of the CIA Information Act of 1984. They shall:

(1) Determine whether a record exists;

(2) Determine whether and to what extent any FOIA exemptions apply;

(3) Approve the disclosure of all non-exempt records or portions of records for which they are the originator; and

(4) Forward to the Coordinator all records approved for release or necessary for coordination with or

referral to another originator or interested party. In making these decisions, the CIA component officers shall be guided by the applicable law as well as the procedures specified at 32 CFR 1900.31 and 32 CFR 1900.32 regarding confidential commercial information and personal information (about persons other than the requester).

(b) *Referrals and coordinations.* As applicable and within ten (10) days of receipt by the Coordinator, any CIA records containing information originated by other CIA components shall be forwarded to those entities for action in accordance with paragraph (a) of this section and return. Records originated by other federal agencies or CIA records containing other federal agency information shall be forwarded to such agencies within ten (10) days of our completion of initial action in the case for action under their regulations and direct response to the requester (for other agency records) or return to the CIA (for CIA records). Effective October 2, 1997, the ten (10) day provision is modified to twenty (20) days pursuant to the Electronic Freedom of Information Act Amendments of 1996.

§ 1900.23 Payment of fees, notification of decision, and right of appeal.

(a) *Fees in general.* Fees collected under this part do not accrue to the Central Intelligence Agency and shall be deposited immediately to the general account of the United States Treasury.

(b) *Notification of decision.* Upon completion of all required review and the receipt of accrued fees (or promise to pay such fees), the Agency will promptly inform the requester in writing of those records or portions of records which may be released and which must be denied. With respect to the former, the Agency will provide copies; with respect to the latter, the Agency shall explain the reasons for the denial, identify the person(s) responsible for such decisions by name and title, and give notice of a right of administrative appeal.

(c) *Availability of reading room.* As an alternative to receiving records by mail, a requester may arrange to inspect the records deemed releasable at a CIA ''reading room'' in the metropolitan Washington, DC area. Access will be granted after applicable and accrued fees have been paid. Requests to review or browse documents in our database of ''officially released records'' will also be honored in this manner to the extent that paper copies or electronic copies in unclassified computer systems exist. All such requests shall be in writing and addressed pursuant to 32 CFR 1900.03. The records will be available at such times as mutually agreed but not less than three (3) days from our receipt of a request. The requester will be responsible for reproduction charges for any copies of records desired.

Additional Administrative Matters

§ 1900.31 Procedures for business information.

(a) *In general.* Business information obtained by the Central Intelligence Agency by a submitter shall not be disclosed pursuant to a Freedom of Information Act request except in accordance with this section. For purposes of this section, the following definitions apply:

(1) *Business information* means commercial or financial information in which a legal entity has a recognized property interest;

(2) *Confidential commercial information* means such business information provided to the United States Government by a submitter which is reasonably believed to contain information exempt from release under exemption (b)(4) of the Freedom of Information Act, 5 U.S.C. 552, because disclosure could reasonably be expected to cause substantial competitive harm;

(3) *Submitter* means any person or entity who provides confidential commercial information to the United States Government; it includes, but is not limited to, corporations, businesses (however organized), state governments, and foreign governments; and

(b) *Designation of confidential commercial information.* A submitter of business information will use good-faith efforts to designate, by appropriate markings, either at the time of submission or at a reasonable time thereafter, any portions of its submission that it considers to be confidential commercial information and hence protected from required disclosure pursuant to exemption (b)(4). Such designations shall expire ten (10) years after the date of the submission unless the submitter requests, and provides justification for, a longer designation period.

(c) *Process in event of FOIA request.*—(1) *Notice to submitters.* The Agency shall provide a submitter with prompt written notice of receipt of a Freedom of Information Act request encompassing business information whenever:

(i) The submitter has in good faith designated the information as confidential commercial information, or

(ii) The Agency believes that disclosure of the information could reasonably be expected to cause substantial competitive harm, and

(iii) The information was submitted within the last ten (10) years unless the submitter requested and provided acceptable justification for a specific notice period of greater duration.

(2) *Form of notice.* This notice shall either describe the exact nature of the confidential commercial information at issue or provide copies of the responsive records containing such information.

(3) *Response by submitter.* (i) Within seven (7) days of the above notice, all claims of confidentiality by a submitter must be supported by a detailed statement of any objection to disclosure. Such statement shall:

(A) Specify that the information has not been disclosed to the public;

(B) Explain why the information is contended to be a trade secret or confidential commercial information;

(C) Explain how the information is capable of competitive damage if disclosed;

(D) State that the submitter will provide the Agency and the Department of Justice with such litigation defense as requested; and

(E) Be certified by an officer authorized to legally bind the corporation or similar entity.

(ii) It should be noted that information provided by a submitter pursuant to this provision may itself be subject to disclosure under the FOIA.

(4) Decision and notice of intent to disclose. (i) The Agency shall consider carefully a submitter's objections and specific grounds for nondisclosure prior to its final determination. If the Agency decides to disclose a document over the objection of a submitter, the Agency shall provide the submitter a written notice which shall include:

(A) A statement of the reasons for which the submitter's disclosure objections were not sustained;

(B) A description of the information to be disclosed; and

(C) A specified disclosure date which is seven (7) days after the date of the instant notice.

(ii) When notice is given to a submitter under this section, the Agency shall also notify the requester and, if the Agency notifies a submitter that it intends to disclose information, then the requester shall be notified also and given the proposed date for disclosure.

(5) *Notice of FOIA lawsuit.* If a requester initiates a civil action seeking to compel disclosure of information asserted to be within the scope of this section, the Agency shall promptly notify the submitter. The submitter, as specified above, shall provide such litigation assistance as required by the Agency and the Department of Justice.

(6) *Exceptions to notice requirement.* The notice requirements of this section

shall not apply if the Agency determines that:

(i) The information should not be disclosed in light of other FOIA exemptions;

(ii) The information has been published lawfully or has been officially made available to the public;

(iii) The disclosure of the information is otherwise required by law or federal regulation; or

(iv) The designation made by the submitter under this section appears frivolous, except that, in such a case, the Agency will, within a reasonable time prior to the specified disclosure date, give the submitter written notice of any final decision to disclose the information.

§ 1900.32 Procedures for information concerning other persons.

(a) *In general.* Personal information concerning individuals other than the requester shall not be disclosed under the Freedom of Information Act if the proposed release would constitute a clearly unwarranted invasion of personal privacy. See 5 U.S.C. 552(b)(6). For purposes of this section, the following definitions apply:

(1) *personal information* means any information about an individual that is not a matter of public record, or easily discernible to the public, or protected from disclosure because of the implications that arise from Government possession of such information.

(2) *public interest* means the public interest in understanding the operations and activities of the United States Government and not simply any matter which might be of general interest to the requester or members of the public.

(b) *Determination to be made.* In making the required determination under this section and pursuant to exemption (b)(6) of the FOIA, the Agency will balance the privacy interests that would be compromised by disclosure against the public interest in release of the requested information.

(c) *Otherwise.* A requester seeking information on a third person is encouraged to provide a signed affidavit or declaration from the third person waiving all or some of their privacy rights. However, all such waivers shall be narrowly construed and the Coordinator, in the exercise of his discretion and administrative authority, may seek clarification from the third party prior to any or all releases.

§ 1900.33 Allocation of resources; agreed extensions of time.

(a) *In general.* Agency components shall devote such personnel and other resources to the responsibilities imposed by the Freedom of Information Act as may be appropriate and reasonable considering:

(1) The totality of resources available to the component,

(2) The business demands imposed on the component by the Director of Central Intelligence or otherwise by law,

(3) The information review and release demands imposed by the Congress or other governmental authority, and

(4) The rights of all members of the public under the various information review and disclosure laws.

(b) *Discharge of FOIA responsibilities.* Components shall exercise due diligence in their responsibilities under the FOIA and must allocate a reasonable level of resources to requests under the Act in a strictly ''first-in, first-out'' basis and utilizing two or more processing queues to ensure that smaller as well as larger (i.e., project) cases receive equitable attention. The Information and Privacy Coordinator is responsible for management of the Agency-wide program defined by this part and for establishing priorities for cases consistent with established law. The Director, Information Management through the Agency Release Panel shall provide policy and resource direction as necessary and render decisions on administrative appeals.

(c) *Requests for extension of time.* When the Agency is unable to meet the statutory time requirements of the FOIA, it will inform the requester that the request cannot be processed within the statutory time limits, provide an opportunity for the requester to limit the scope of the request so that it can be processed within the statutory time limits, or arrange with the requester an agreed upon time frame for processing the request, or determine that exceptional circumstances mandate additional time. In such instances the Agency will, however, inform a requester of his or her right to decline our request and proceed with an administrative appeal or judicial review as appropriate. Effective October 2 1997, the definition of exceptional circumstances is modified per section 552(a)(6)(C) of the Freedom of Information Act, as amended.

§ 1900.34 Requests for expedited processing.

(a) *In general.* All requests will be handled in the order received on a strictly ''first-in, first-out'' basis. Exceptions to this rule will only be made in accordance with the following procedures. In all circumstances, however, and consistent with established judicial precedent, requests more properly the scope of requests under the Federal Rules of Civil or Criminal Procedure (or other federal, state, or foreign judicial or quasi-judicial rules) will not be granted expedited processing under this or related (e.g., Privacy Act) provisions unless expressly ordered by a federal court of competent jurisdiction.

(b) *Procedure prior to October 2, 1997.* Requests for expedited processing shall be granted only in circumstances that the Agency deems to be exceptional. In making this determination, the Agency shall consider and must decide in the affirmative on all of the following factors:

(i) That there is a genuine need for the specific requested records; and

(ii) That the personal need is exceptional; and

(iii) That there are no alternative forums for the records or information sought; and

(iv) That it is reasonably believed that substantive records relevant to the stated needs may exist and be deemed releasable.

(2) In sum, requests shall be considered for expedited processing only when health, humanitarian, or due process considerations involving possible deprivation of life or liberty create circumstances of exceptional urgency and extraordinary need.

(c) *Procedure on or after October 2, 1997.* Requests for expedited processing will be approved only when a compelling need is established to the satisfaction of the Agency. A requester may make such a request with a certification of ''compelling need'' and, within ten (10) days of receipt, the Agency will decide whether to grant expedited processing and will notify the requester of its decision. The certification shall set forth with specificity the relevant facts upon which the requester relies and it appears to the Agency that substantive records relevant to the stated needs may exist and be deemed releasable. A ''compelling need'' is deemed to exist:

(1) When the matter involves an imminent threat to the life or physical safety of an individual; or

(2) When the request is made by a person primarily engaged in disseminating information and the information is relevant to a subject of public urgency concerning an actual or alleged Federal government activity.

CIA Action on FOIA Administrative Appeals

§ 1900.41 Establishment of appeals structure.

(a) *In general.* Two administrative entities have been established by the

Director of Central Intelligence to facilitate the processing of administrative appeals under the Freedom of Information Act. Their membership, authority, and rules of procedure are as follows.

(b) *Historical Records Policy Board (''HRPB'' or ''Board'').* This Board, the successor to the CIA Information Review Committee, acts as the senior corporate board in the CIA on all matters of information review and release.

(1) *Membership.* The HRPB is composed of the Executive Director, who serves as its Chair, the Deputy Director for Administration, the Deputy Director for Intelligence, the Deputy Director for Operations, the Deputy Director for Science and Technology, the General Counsel, the Director of Congressional Affairs, the Director of the Public Affairs Staff, the Director, Center for the Study of Intelligence, and the Associate Deputy Director for Administration/Information Services, or their designees.

(2) *Authorities and activities.* The HRPB, by majority vote, may delegate to one or more of its members the authority to act on any appeal or other matter or authorize the Chair to delegate such authority, as long as such delegation is not to the same individual or body who made the initial denial. The Executive Secretary of the HRPB is the Director, Information Management. The Chair may request interested parties to participate when special equities or expertise are involved.

(c) *Agency Release Panel (''ARP'' or ''Panel'').* The HRPB, pursuant to its delegation of authority, has established a subordinate Agency Release Panel.

(1) *Membership.* The ARP is composed of the Director, Information Management, who serves as its Chair; the Information Review Officers from the Directorates of Administration, Intelligence, Operations, Science and Technology, and the Director of Central Intelligence Area; the CIA Information and Privacy Coordinator; the Chief, Historical Review Group; the Chair, Publications Review Board; the Chief, Records Declassification Program; and representatives from the Office of General Counsel, the Office of Congressional Affairs, and the Public Affairs Staff.

(2) *Authorities and activities.* The Panel shall meet on a regular schedule and may take action when a simple majority of the total membership is present. The Panel shall advise and assist the HRPB on all information release issues, monitor the adequacy and timeliness of Agency releases, set component search and review priorities, review adequacy of resources available to and planning for all Agency release programs, and perform such other functions as deemed necessary by the Board. The Information and Privacy Coordinator also serves as Executive Secretary of the Panel. The Chair may request interested parties to participate when special equities or expertise are involved. The Panel, functioning as a committee of the whole or through individual members, will make final Agency decisions from appeals of initial adverse decisions under the Freedom of Information Act and such other information release decisions made under 32 CFR parts 1901, 1907, and 1908. Issues shall be decided by a majority of members present; in all cases of a divided vote, any member of the ARP then present may refer such matter to the HRPB by written memorandum to the Executive Secretary of the HRPB. Matters decided by the Panel or Board will be deemed a final decision by the Agency.

§ 1900.42 Right of appeal and appeal procedures.

(a) *Right of Appeal.* A right of administrative appeal exists whenever access to any requested record or any portion thereof is denied, no records are located in response to a request, or a request for a fee waiver is denied. The Agency will apprise all requesters in writing of their right to appeal such decisions to the CIA Agency Release Panel through the Coordinator.

(b) *Requirements as to time and form.* Appeals of decisions must be received by the Coordinator within forty-five (45) days of the date of the Agency's initial decision. The Agency may, for good cause and as a matter of administrative discretion, permit an additional thirty (30) days for the submission of an appeal. All appeals shall be in writing and addressed as specified in 32 CFR 1900.03. All appeals must identify the documents or portions of documents at issue with specificity and may present such information, data, and argument in support as the requester may desire.

(c) *Exceptions.* No appeal shall be accepted if the requester has outstanding fees for information services at this or another federal agency. In addition, no appeal shall be accepted if the information in question has been the subject of a review within the previous two (2) years or is the subject of pending litigation in the federal courts.

(d) *Receipt, recording, and tasking.* The Agency shall promptly record each request received under this part, acknowledge receipt to the requester in writing, and thereafter effect the necessary taskings to the Deputy Director(s) in charge of the directorate(s) which originated or has an interest in the record(s) subject to the appeal. As used herein, the term Deputy Director includes an equivalent senior official in the DCI-area as well as a designee known as the Information Review Officer for a directorate or area.

(e) *Time for response.* The Agency shall attempt to complete action on an appeal within twenty (20) days of the date of receipt. The current volume of requests, however, often requires that the Agency request additional time from the requester pursuant to 32 CFR 1900.33. In such event, the Agency will inform the requester of the right to judicial review.

§ 1900.43 Determination(s) by Deputy Director(s).

Each Deputy Director in charge of a directorate which originated or has an interest in any of the records subject to the appeal, or designee, is a required party to any appeal; other interested parties may become involved through the request of the Coordinator when it is determined that some or all of the information is also within their official cognizance. These parties shall respond in writing to the Coordinator with a finding as to the exempt status of the information. This response shall be provided expeditiously on a ''first-in, first-out'' basis taking into account the business requirements of the parties and consistent with the information rights of members of the general public under the various information review and release laws.

§ 1900.44 Action by appeals authority.

(a) *Preparation of docket.* The Coordinator, acting in the capacity of Executive Secretary of the Agency Release Panel, shall place administrative appeals of FOIA requests ready for adjudication on the agenda at the next occurring meeting of that Panel. The Executive Secretary shall provide a summation memorandum for consideration of the members; the complete record of the request consisting of the request, the document(s) (sanitized and full text) at issue, and the findings of the concerned Deputy Director(s) or designee(s).

(b) *Decision by the Agency Release Panel.* The Agency Release Panel shall meet and decide requests sitting as a committee of the whole. Decisions are by majority vote of those present at a meeting and shall be based on the written record and their deliberations; no personal appearances shall be permitted without the express permission of the Panel.

(c) *Decision by the Historical Records Policy Board*. In any cases of divided vote by the ARP, any member of that body is authorized to refer the request to the CIA Historical Records Policy Board which acts as the senior corporate board for the Agency. The record compiled (the request, the memoranda filed by the originator and interested parties, and the previous decision(s)) as well as any memorandum of law or policy the referent desires to be considered, shall be certified by the Executive Secretary of the Agency Release Panel and shall constitute the official record of the proceedings and must be included in any subsequent filings.

§ 1900.45 Notification of decision and right of judicial review.

The Executive Secretary of the Agency Release Panel shall promptly prepare and communicate the decision of the Panel or Board to the requester. With respect to any decision to deny information, that correspondence shall state the reasons for the decision, identify the officer responsible, and include a notice of a right to judicial review.

PART 1901—PUBLIC RIGHTS UNDER THE PRIVACY ACT OF 1974

General

Sec.
1901.01 Authority and purpose.
1901.02 Definitions.
1901.03 Contact for general information and requests.
1901.04 Suggestions and complaints.

Filing of Privacy Act Requests

1901.11 Preliminary information.
1901.12 Requirements as to form.
1901.13 Requirements as to identification of requester.
1901.14 Fees.

Action on Privacy Act Requests

1901.21 Processing requests for access to or amendment of records.
1901.22 Action and determination(s) by originator(s) or any interested party.
1901.23 Notification of decision and right of appeal.

Additional Administrative Matters

1901.31 Special procedures for medical *and psychological* records.
1901.32 Requests for expedited processing.
1901.33 Allocation of resources; agreed extensions of time.

Action on Privacy Act Administrative Appeals

1901.41 Establishment of appeals structure.
1901.42 Right of appeal and appeal procedures.
1901.43 Determination(s) by Deputy Director(s).
1901.44 Action by appeals authority.
1901.45 Notification of decision and right of judicial review.

Prohibitions

1901.51 Limitations on disclosure.
1901.52 Criminal penalties.

Exemptions

1901.61 Purpose and authority.
1901.62 General exemptions.
1901.63 Specific exemptions.

Authority: National Security Act of 1947, as amended; Central Intelligence Agency Act of 1949, as amended; Privacy Act, as amended; and Executive Order 12958 (or successor Orders).

General

§ 1901.01 Authority and purpose.

(a) *Authority*. This part is issued under the authority of and in order to implement the Privacy Act of 1974 (5 U.S.C. 552a); sec. 102 of the National Security Act of 1947, as amended (50 U.S.C. 403); and sec. 6 of the Central Intelligence Agency Act of 1949, as amended (50 U.S.C. 403g).

(b) *Purpose in general*. This part prescribes procedures for a requester, as defined herein:

(1) To request notification of whether the Central Intelligence Agency maintains a record concerning them in any non-exempt portion of a system of records or any non-exempt system of records;

(2) To request a copy of all non-exempt records or portions of records;

(3) To request that any such record be amended or augmented; and

(4) To file an administrative appeal to any initial adverse determination to deny access to or amend a record.

(c) *Other purposes*. This part also sets forth detailed limitations on how and to whom the Agency may disclose personal information and gives notice that certain actions by officers or employees of the United States Government or members of the public could constitute criminal offenses.

§ 1901.02 Definitions.

For purposes of this part, the following terms have the meanings indicated:

(a) *Agency* or *CIA* means the United States Central Intelligence Agency acting through the CIA Information and Privacy Coordinator;

(b) *Days* means calendar days when the Agency is operating and specifically excludes Saturdays, Sundays, and legal public holidays. Three (3) days may be added to any time limit imposed on a requester by this part if responding by U.S. domestic mail; ten (10) days may be added if responding by international mail;

(c) *Control* means ownership or the authority of the CIA pursuant to federal statute or privilege to regulate official or public access to records;

(d) *Coordinator* means the CIA Information and Privacy Coordinator who serves as the Agency manager of the information review and release program instituted under the Privacy Act;

(e) *Federal agency* means any executive department, military department, or other establishment or entity included in the definition of agency in 5 U.S.C. 552(f);

(f) *Interested party* means any official in the executive, military, congressional, or judicial branches of government, United States or foreign, or U.S. Government contractor who, in the sole discretion of the CIA, has a subject matter or physical interest in the documents or information at issue;

(g) *Maintain* means maintain, collect, use, or disseminate;

(h) *Originator* means the U.S. Government official who originated the document at issue or successor in office or such official who has been delegated release or declassification authority pursuant to law;

(i) *Privacy Act* or *PA* means the statute as codified at 5 U.S.C. 552a;

(j) *Record* means an item, collection, or grouping of information about an individual that is maintained by the Central Intelligence Agency in a system of records;

(k) *Requester* or *individual* means a citizen of the United States or an alien lawfully admitted for permanent residence who is a living being and to whom a record might pertain;

(l) *responsive record* means those documents (records) which the Agency has determined to be within the scope of a Privacy Act request;

(m) *Routine use* means, with respect to the disclosure of a record, the use of such record for a purpose which is compatible with the purpose for which the record is maintained;

(n) *system of records* means a group of any records under the control of the Central Intelligence Agency from which records are retrieved by the name of an individual or by some identifying number, symbol, or other identifying particular assigned to that individual.

§ 1901.03 Contact for general information and requests.

For general information on this part, to inquire about the Privacy Act program at CIA, or to file a Privacy Act request, please direct your communication in writing to the Information and Privacy Coordinator, Central Intelligence Agency, Washington, DC. 20505. Requests with the required identification statement

pursuant to 32 CFR 1901.13 must be filed in original form by mail. Subsequent communications and any inquiries will be accepted by mail or facsimile at (703) 613–3007 or by telephone at (703) 613–1287. Collect calls cannot be accepted.

§ 1901.04 Suggestions and complaints.

The Agency welcomes suggestions or complaints with regard to its administration of the Privacy Act. Many requesters will receive pre-paid, customer satisfaction survey cards. Letters of suggestion or complaint should identify the specific purpose and the issues for consideration. The Agency will respond to all substantive communications and take such actions as determined feasible and appropriate.

Filing of Privacy Act Requests

§ 1901.11 Preliminary information.

Members of the public shall address all communications to the contact specified at § 1901.03 and clearly delineate the communication as a request under the Privacy Act and this regulation. Requests and administrative appeals on requests, referrals, and coordinations received from members of the public who owe outstanding fees for information services at this or other federal agencies will not be accepted and action on existing requests and appeals will be terminated in such circumstances.

§ 1901.12 Requirements as to form.

(a) *In general.* No particular form is required. All requests must contain the identification information required at § 1901.13.

(b) *For access.* For requests seeking access, a requester should, to the extent possible, describe the nature of the record sought and the record system(s) in which it is thought to be included. Requesters may find assistance from information described in the Privacy Act Issuances Compilation which is published biannually by the **Federal Register**. In lieu of this, a requester may simply describe why and under what circumstances it is believed that this Agency maintains responsive records; the Agency will undertake the appropriate searches.

(c) *For amendment.* For requests seeking amendment, a requester should identify the particular record or portion subject to the request, state a justification for such amendment, and provide the desired amending language.

§ 1901.13 Requirements as to identification of requester.

(a) *In general.* Individuals seeking access to or amendment of records concerning themselves shall provide their full (legal) name, address, date and place of birth, and current citizenship status together with a statement that such information is true under penalty of perjury or a notarized statement swearing to or affirming identity. If the Agency determines that this information is not sufficient, the Agency may request additional or clarifying information.

(b) *Requirement for aliens.* Only aliens lawfully admitted for permanent residence (PRAs) may file a request pursuant to the Privacy Act and this part. Such individuals shall provide, in addition to the information required under paragraph (a) of this section, their Alien Registration Number and the date that status was acquired.

(c) *Requirement for representatives.* The parent or guardian of a minor individual, the guardian of an individual under judicial disability, or an attorney retained to represent an individual shall provide, in addition to establishing the identity of the minor or individual represented as required in paragraph (a) or (b) of this section, evidence of such representation by submission of a certified copy of the minor's birth certificate, court order, or representational agreement which establishes the relationship and the requester's identity.

(d) *Procedure otherwise.* If a requester or representative fails to provide the information in paragraph (a), (b), or (c) of this section within forty-five (45) days of the date of our request, the Agency will deem the request closed. This action, of course, would not prevent an individual from refiling his or her Privacy Act request at a subsequent date with the required information.

§ 1901.14 Fees.

No fees will be charged for any action under the authority of the Privacy Act, 5 U.S.C. 552a, irrespective of the fact that a request is or may be processed under the authority of both the Privacy Act and the Freedom of Information Act.

Action on Privacy Act Requests

§ 1901.21 Processing requests for access to or amendment of records.

(a) *In general.* Requests meeting the requirements of 32 CFR 1901.11 through 1901.13 shall be processed under both the Freedom of Information Act, 5 U.S.C. 552, and the Privacy Act, 5 U.S.C. 552a, and the applicable regulations, unless the requester demands otherwise in writing. Such requests will be processed under both Acts regardless of whether the requester cites one Act in the request, both, or neither. This action is taken in order to ensure the maximum possible disclosure to the requester.

(b) *Receipt, recording and tasking.* Upon receipt of a request meeting the requirements of §§ 1901.11 through 1901.13, the Agency shall within ten (10) days record each request, acknowledge receipt to the requester, and thereafter effect the necessary taskings to the components reasonably believed to hold responsive records.

(c) *Effect of certain exemptions.* In processing a request, the Agency shall decline to confirm or deny the existence or nonexistence of any responsive records whenever the fact of their existence or nonexistence is itself classified under Executive Order 12958 or revealing of intelligence sources and methods protected pursuant to section 103(c)(5) of the National Security Act of 1947. In such circumstances, the Agency, in the form of a final written response, shall so inform the requester and advise of his or her right to an administrative appeal.

(d) *Time for response.* Although the Privacy Act does not mandate a time for response, our joint treatment of requests under both the Privacy Act and the FOIA means that the Agency should provide a response within the FOIA statutory guideline of ten (10) days on initial requests and twenty (20) days on administrative appeals. However, the current volume of requests require that the Agency often seek additional time from a requester pursuant to 32 CFR 1901.33. In such event, the Agency will inform the requester in writing and further advise of his or her right to file an administrative appeal.

§ 1901.22 Action and determination(s) by originator(s) or any interested party.

(a) *Initial action for access.* CIA components tasked pursuant to a Privacy Act access request shall search all relevant record systems within their cognizance. They shall:

(1) Determine whether responsive records exist;

(2) Determine whether access must be denied in whole or part and on what legal basis under both Acts in each such case;

(3) Approve the disclosure of records for which they are the originator; and

(4) Forward to the Coordinator all records approved for release or necessary for coordination with or referral to another originator or interested party as well as the specific determinations with respect to denials (if any).

(b) *Initial action for amendment.* CIA components tasked pursuant to a

Privacy Act amendment request shall review the official records alleged to be inaccurate and the proposed amendment submitted by the requester. If they determine that the Agency's records are not accurate, relevant, timely or complete, they shall promptly:

(1) Make the amendment as requested;

(2) Write to all other identified persons or agencies to whom the record has been disclosed (if an accounting of the disclosure was made) and inform of the amendment; and

(3) Inform the Coordinator of such decisions.

(c) *Action otherwise on amendment request.* If the CIA component records manager declines to make the requested amendment or declines to make the requested amendment but agrees to augment the official records, that manager shall promptly:

(1) Set forth the reasons for refusal; and

(2) Inform the Coordinator of such decision and the reasons therefore.

(d) *Referrals and coordinations.* As applicable and within ten (10) days of receipt by the Coordinator, any CIA records containing information originated by other CIA components shall be forwarded to those entities for action in accordance with paragraphs (a), (b), or (c) of this section and return. Records originated by other federal agencies or CIA records containing other federal agency information shall be forwarded to such agencies within ten (10) days of our completion of initial action in the case for action under their regulations and direct response to the requester (for other agency records) or return to the CIA (for CIA records).

(e) *Effect of certain exemptions.* This section shall not be construed to allow access to systems of records exempted by the Director of Central Intelligence pursuant to subsections (j) and (k) of the Privacy Act or where those exemptions require that the CIA can neither confirm nor deny the existence or nonexistence of responsive records.

§ 1901.23 Notification of decision and right of appeal.

Within ten (10) days of receipt of responses to all initial taskings and subsequent coordinations (if any), and dispatch of referrals (if any), the Agency will provide disclosable records to the requester. If a determination has been made not to provide access to requested records (in light of specific exemptions) or that no records are found, the Agency shall so inform the requester, identify the denying official, and advise of the right to administrative appeal.

Additional Administrative Matters

§ 1901.31 Special procedures for medical and psychological records.

(a) *In general.* When a request for access or amendment involves medical or psychological records and when the originator determines that such records are not exempt from disclosure, the Agency will, after consultation with the Director of Medical Services, determine:

(1) Which records may be sent directly to the requester and

(2) Which records should not be sent directly to the requester because of possible medical or psychological harm to the requester or another person.

(b) *Procedure for records to be sent to physician.* In the event that the Agency determines, in accordance with paragraph (a)(2) of this section, that records should not be sent directly to the requester, the Agency will notify the requester in writing and advise that the records at issue can be made available only to a physician of the requester's designation. Upon receipt of such designation, verification of the identity of the physician, and agreement by the physician:

(1) To review the documents with the requesting individual,

(2) To explain the meaning of the documents, and

(3) To offer counseling designed to temper any adverse reaction, the Agency will forward such records to the designated physician.

(c) *Procedure if physician option not available.* If within sixty (60) days of the paragraph (a)(2) of this section, the requester has failed to respond or designate a physician, or the physician fails to agree to the release conditions, the Agency will hold the documents in abeyance and advise the requester that this action may be construed as a technical denial. The Agency will also advise the requester of the responsible official and of his or her rights to administrative appeal and thereafter judicial review.

§ 1901.32 Requests for expedited processing.

(a) All requests will be handled in the order received on a strictly ''first-in, first-out'' basis. Exceptions to this rule will only be made in circumstances that the Agency deems to be exceptional. In making this determination, the Agency shall consider and must decide in the affirmative on all of the following factors:

(1) That there is a genuine need for the records; and

(2) That the personal need is exceptional; and

(3) That there are no alternative forums for the records sought; and

(4) That it is reasonably believed that substantive records relevant to the stated needs may exist and be deemed releasable.

(b) In sum, requests shall be considered for expedited processing only when health, humanitarian, or due process considerations involving possible deprivation of life or liberty create circumstances of exceptional urgency and extraordinary need. In accordance with established judicial precedent, requests more properly the scope of requests under the Federal Rules of Civil or Criminal Procedure (or equivalent state rules) will not be granted expedited processing under this or related (e.g., Freedom of Information Act) provisions unless expressly ordered by a federal court of competent jurisdiction.

§ 1901.33 Allocation of resources; agreed extensions of time.

(a) *In general.* Agency components shall devote such personnel and other resources to the responsibilities imposed by the Privacy Act as may be appropriate and reasonable considering:

(1) The totality of resources available to the component,

(2) The business demands imposed on the component by the Director of Central Intelligence or otherwise by law,

(3) The information review and release demands imposed by the Congress or other governmental authority, and

(4) The rights of all members of the public under the various information review and disclosure laws.

(b) *Discharge of Privacy Act responsibilities.* Components shall exercise due diligence in their responsibilities under the Privacy Act and must allocate a reasonable level of resources to requests under the Act in a strictly ''first-in, first-out'' basis and utilizing two or more processing queues to ensure that smaller as well as larger (i.e., project) cases receive equitable attention. The Information and Privacy Coordinator is responsible for management of the Agency-wide program defined by this Part and for establishing priorities for cases consistent with established law. The Director, Information Management through the Agency Release Panel shall provide policy and resource direction as necessary and shall make determinations on administrative appeals.

(c) *Requests for extension of time.* While the Privacy Act does not specify time requirements, our joint treatment of requests under the FOIA means that when the Agency is unable to meet the statutory time requirements of the FOIA,

the Agency may request additional time from a requester. In such instances the Agency will inform a requester of his or her right to decline our request and proceed with an administrative appeal or judicial review as appropriate.

Action on Privacy Act Administrative Appeals

§ 1901.41 Establishment of appeals structure.

(a) *In general.* Two administrative entities have been established by the Director of Central Intelligence to facilitate the processing of administrative appeals under the Freedom of Information Act. Their membership, authority, and rules of procedure are as follows.

(b) *Historical Records Policy Board (''HRPB'' or ''Board'').* This Board, the successor to the CIA Information Review Committee, acts as the senior corporate board in the CIA on all matters of information review and release.

(1) *Membership.* The HRPB is composed of the Executive Director, who serves as its Chair, the Deputy Director for Administration, the Deputy Director for Intelligence, the Deputy Director for Operations, the Deputy Director for Science and Technology, the General Counsel, the Director of Congressional Affairs, the Director of the Public Affairs Staff, the Director, Center for the Study of Intelligence, and the Associate Deputy Director for Administration/Information Services, or their designees.

(2) *Authorities and activities.* The HRPB, by majority vote, may delegate to one or more of its members the authority to act on any appeal or other matter or authorize the Chair to delegate such authority, as long as such delegation is not to the same individual or body who made the initial denial. The Executive Secretary of the HRPB is the Director, Information Management. The Chair may request interested parties to participate when special equities or expertise are involved.

(c) *Agency Release Panel (''ARP'' or ''Panel'').* The HRPB, pursuant to its delegation of authority, has established a subordinate Agency Release Panel.

(1) *Membership.* The ARP is composed of the Director, Information Management, who serves as its Chair; the Information Review Officers from the Directorates of Administration, Intelligence, Operations, Science and Technology, and the Director of Central Intelligence Area; the CIA Information and Privacy Coordinator; the Chief, Historical Review Group; the Chair, Publications Review Board; the Chief, Records Declassification Program; and representatives from the Office of General Counsel, the Office of Congressional Affairs, and the Public Affairs Staff.

(2) *Authorities and activities.* The Panel shall meet on a regular schedule and may take action when a simple majority of the total membership is present. The Panel shall advise and assist the HRPB on all information release issues, monitor the adequacy and timeliness of Agency releases, set component search and review priorities, review adequacy of resources available to and planning for all Agency release programs, and perform such other functions as deemed necessary by the Board. The Information and Privacy Coordinator also serves as Executive Secretary of the Panel. The Chair may request interested parties to participate when special equities or expertise are involved. The Panel, functioning as a committee of the whole or through individual members, will make final Agency decisions from appeals of initial adverse decisions under the Freedom of Information Act and such other information release decisions made under 32 CFR parts 1901, 1907, and 1908. Issues shall be decided by a majority of members present; in all cases of a divided vote, any member of the ARP then present may refer such matter to the HRPB by written memorandum to the Executive Secretary of the HRPB. Matters decided by the Panel or Board will be deemed a final decision by the Agency.

§ 1901.42 Right of appeal and appeal procedures.

(a) *Right of Appeal.* A right of administrative appeal exists whenever access to any requested record or any portion thereof is denied, no records are located in response to a request, or a request for amendment is denied. The Agency will apprise all requesters in writing of their right to appeal such decisions to the CIA Agency Release Panel through the Coordinator.

(b) *Requirements as to time and form.* Appeals of decisions must be received by the Coordinator within forty-five (45) days of the date of the Agency's initial decision. The Agency may, for good cause and as a matter of administrative discretion, permit an additional thirty (30) days for the submission of an appeal. All appeals to the Panel shall be in writing and addressed as specified in 32 CFR 1901.03. All appeals must identify the documents or portions of documents at issue with specificity, provide the desired amending language (if applicable), and may present such information, data, and argument in support as the requester may desire.

(c) *Exceptions.* No appeal shall be accepted if the requester has outstanding fees for information services at this or another federal agency. In addition, no appeal shall be accepted if the information in question has been the subject of an administrative review within the previous two (2) years or is the subject of pending litigation in the federal courts.

(d) *Receipt, recording, and tasking.* The Agency shall promptly record each administrative appeal, acknowledge receipt to the requester in writing, and thereafter effect the necessary taskings to the Deputy Director(s) in charge of the directorate(s) which originated or has an interest in the record(s) subject to the appeal. As used herein, the term Deputy Director includes an equivalent senior official within the DCI-area as well as a designee known as the Information Review Officer for a directorate or area.

§ 1901.43 Determination(s) by Deputy Director(s).

Each Deputy Director in charge of a directorate which originated or has an interest in any of the records subject to the appeal, or designee, is a required party to any appeal; other interested parties may become involved through the request of the Coordinator when it is determined that some or all of the information is also within their official cognizance. These parties shall respond in writing to the Coordinator with a finding as to the exempt or non-exempt status of the information including citations to the applicable exemption and/or their agreement or disagreement as to the requested amendment and the reasons therefore. Each response shall be provided expeditiously on a ''first-in, first-out'' basis taking into account the business requirements of the parties and consistent with the information rights of members of the general public under the various information review and release laws.

§ 1901.44 Action by appeals authority.

(a) *Preparation of docket.* The Coordinator, acting as the Executive Secretary of the Agency Release Panel, shall place administrative appeals of Privacy Act requests ready for adjudication on the agenda at the next occurring meeting of that Panel. The Executive Secretary shall provide a summation memorandum for consideration of the members; the complete record of the request consisting of the request, the document(s) (sanitized and full text) at

issue, and the findings of the concerned Deputy Director(s) or designee(s).

(b) *Decision by the Agency Release Panel.* The Agency Release Panel shall meet and decide requests sitting as a committee of the whole. Decisions are by majority vote of those present at a meeting and shall be based on the written record and their deliberations; no personal appearances shall be permitted without the express permission of the Panel.

(c) *Decision by the Historical Records Policy Board.* In any cases of divided vote by the ARP, any member of that body is authorized to refer the request to the CIA Historical Records Policy Board which acts as the senior corporate board for the Agency. The record compiled (the request, the memoranda filed by the originator and interested parties, and the previous decision(s)) as well as any memorandum of law or policy the referent desires to be considered, shall be certified by the Executive Secretary of the Agency Release Panel and shall constitute the official record of the proceedings and must be included in any subsequent filings.

§ 1901.45 Notification of decision and right of judicial review.

(a) *In general.* The Executive Secretary of the Agency Release Panel shall promptly prepare and communicate the decision of the Panel or Board to the requester. With respect to any decision to deny information or deny amendment, that correspondence shall state the reasons for the decision, identify the officer responsible, and include a notice of the right to judicial review.

(b) *For amendment requests.* With further respect to any decision to deny an amendment, that correspondence shall also inform the requester of the right to submit within forty-five (45) days a statement of his or her choice which shall be included in the official records of the CIA. In such cases, the applicable record system manager shall clearly note any portion of the official record which is disputed, append the requester's statement, and provide copies of the statement to previous recipients (if any are known) and to any future recipients when and if the disputed information is disseminated in accordance with a routine use.

Prohibitions

§ 1901.51 Limitations on disclosure.

No record which is within a system of records shall be disclosed by any means of communication to any individual or to another agency, except pursuant to a written request by, or with the prior written consent of, the individual to whom the record pertains, unless disclosure of the record would be:

(a) To those officers and employees of this Agency which maintains the record who have a need for the record in the performance of their duties;

(b) Required under the Freedom of Information Act, 5 U.S.C. 552;

(c) For a routine use as defined in § 1901.02(m), as contained in the Privacy Act Issuances Compilation which is published biennially in the **Federal Register**, and as described in §§ (a)(7) and (e)(4)(D) of the Act;

(d) To the Bureau of the Census for purposes of planning or carrying out a census or survey or related activity pursuant to the provisions of U.S.C. Title 13;

(e) To a recipient who has provided the Agency with advance adequate written assurance that the record will be used solely as a statistical research or reporting record, and the record is to be transferred in a form that is not individually identifiable;

(f) To the National Archives and Records Administration as a record which has sufficient historical or other value to warrant its continued preservation by the United States Government, or for evaluation by the Archivist of the United States or designee to determine whether the record has such value;

(g) To another agency or to an instrumentality of any governmental jurisdiction within or under the control of the United States for a civil or criminal law enforcement activity if the activity is authorized by law, and if the head of that agency or instrumentality has made a written request to the CIA specifying the particular information desired and the law enforcement activity for which the record is sought;

(h) To a person pursuant to a showing of compelling circumstances affecting the health or safety of an individual if upon such disclosure notification is transmitted to the last known address of such individual;

(i) To either House of Congress, or, to the extent of matter within its jurisdiction, any committee or subcommittee thereof, any joint committee of Congress or subcommittee of any such joint committee;

(j) To the Comptroller General or any of his authorized representatives in the course of the performance of the duties of the General Accounting Office; or

(k) To any agency, government instrumentality, or other person or entity pursuant to the order of a court of competent jurisdiction of the United States or constituent states.

§ 1901.52 Criminal penalties.

(a) *Unauthorized disclosure.* Criminal penalties may be imposed against any officer or employee of the CIA who, by virtue of employment, has possession of or access to Agency records which contain information identifiable with an individual, the disclosure of which is prohibited by the Privacy Act or by these rules, and who, knowing that disclosure of the specific material is so prohibited, willfully discloses the material in any manner to any person or agency not entitled to receive same.

(b) *Unauthorized maintenance.* Criminal penalties may be imposed against any officer or employee of the CIA who willfully maintains a system of records without meeting the requirements of section (e)(4) of the Privacy Act, 5 U.S.C.552a. The Coordinator and the Inspector General are authorized independently to conduct such surveys and inspect such records as necessary from time to time to ensure that these requirements are met.

(c) *Unauthorized requests.* Criminal penalties may be imposed upon any person who knowingly and willfully requests or obtains any record concerning an individual from the CIA under false pretenses.

Exemptions

§ 1901.61 Purpose and authority.

Purpose of exemptions. This Part sets forth those systems of records or portions of systems of records which the Director of Central Intelligence has determined to exempt from the procedures established by this regulation and from certain provisions of the Privacy Act:

(a) The purpose of the following specified general exemption of polygraph records is to prevent access and review of records which intimately reveal CIA operational methods. The purpose of the general exemption from the provisions of sections (c)(3) and (e)(3) (A)–(D) of the Privacy Act is to avoid disclosures that may adversely affect ongoing operational relationships with other intelligence and related organizations and thus reveal or jeopardize intelligence sources and methods or risk exposure of intelligence sources and methods in the processing of covert employment applications.

(b) The purpose of the general exemption from sections (d), (e)(4)(G), (f)(1), and (g) of the Privacy Act is to protect only those portions of systems of records which if revealed would risk exposure of intelligence sources and methods or hamper the ability of the CIA to effectively use information

received from other agencies or foreign governments.

(c) It should be noted that by subjecting information which would consist of, reveal, or pertain to intelligence sources and methods to separate determinations by the Director of Central Intelligence under the provision entitled *''General exemptions,''* 32 CFR 1901.62 regarding access and notice, an intent is established to apply the exemption from access and notice only in those cases where notice in itself would constitute a revelation of intelligence sources and methods; in all cases where only access to information would reveal such source or method, notice will be given upon request.

(d) The purpose of the general exemption for records that consist of, pertain to, or would otherwise reveal the identities of employees who provide information to the Office of the Inspector General is to implement section 17 of the CIA Act of 1949, as amended, 50 U.S.C. 403q(e)(3), and to ensure that no action constituting a reprisal or threat of reprisal is taken because an employee has cooperated with the Office of Inspector General.

(e) The purpose of the specific exemptions provided for under section (k) of the Privacy Act is to exempt only those portions of systems of records which would consist of, reveal, or pertain to that information which is enumerated in that section of the Act.

(f) In each case, the Director of Central Intelligence currently or then in office has determined that the enumerated classes of information should be exempt in order to comply with dealing with the proper classification of national defense or foreign policy information; protect the identification of persons who provide information to the CIA Inspector General; protect the privacy of other persons who supplied information under an implied or express grant of confidentiality in the case of law enforcement or employment and security suitability investigations (or promotion material in the case of the armed services); protect information used in connection with protective services under 18 U.S.C. 3056; protect the efficacy of testing materials; and protect information which is required by statute to be maintained and used solely as statistical records.

§ 1901.62 General exemptions.

(a) Pursuant to authority granted in section (j) of the Privacy Act, the Director of Central Intelligence has determined to exempt from all sections of the Act—except sections 552a(b); (c) (1) and (2); (e) (1), (4) (A)–(F), (5), (6), (7), (9), (10), and (11); and (i)—the following systems of records or portions of records in a system of record:

(1) Polygraph records.

(b) Pursuant to authority granted in section (j) of the Privacy Act, the Director of Central Intelligence has determined to exempt from sections (c)(3) and (e)(3) (A)–(D) of the Act all systems of records maintained by this Agency.

(c) Pursuant to authority granted in section (j) of the Privacy Act, the Director of Central Intelligence has determined to exempt from notification under sections (e)(4)(G) and (f)(1) those portions of each and all systems of records which have been exempted from individual access under section (j) in those cases where the Coordinator determines after advice by the responsible components that confirmation of the existence of a record may jeopardize intelligence sources and methods. In such cases the Agency must neither confirm nor deny the existence of the record and will advise a requester that there is no record which is available pursuant to the Privacy Act of 1974.

(d) Pursuant to authority granted in section (j) of the Privacy Act, the Director of Central Intelligence has determined to exempt from access by individuals under section (d) of the Act those portions and only those portions of all systems of records maintained by the CIA that:

(1) Consist of, pertain to, or would otherwise reveal intelligence sources and methods;

(2) Consist of documents or information provided by any foreign government entity, international organization, or, any United States federal, state, or other public agency or authority; and

(3) Consist of information which would reveal the identification of persons who provide information to the CIA Inspector General.

(e) Pursuant to authority granted in section (j) of the Privacy Act, the Director of Central Intelligence has determined to exempt from judicial review under section (g) of the Act all determinations to deny access under section (d) of the Act and all decisions to deny notice under sections (e)(4)(G) and (f)(1) of the Act pursuant to determination made under paragraph (c) of this section when it has been determined by an appropriate official of the CIA that such access would disclose information which would:

(1) Consist of, pertain to, or otherwise reveal intelligence sources and methods;

(2) Consist of documents or information provided by any foreign government entity, international organization, or, any United States federal, state, or other public agency or authority; and

(3) Consist of information which would reveal the identification of persons who provide information to the CIA Inspector General.

§ 1901.63 Specific exemptions.

Pursuant to authority granted in section (k) of the Privacy Act, the Director of Central Intelligence has determined to exempt from section (d) of the Privacy Act those portions and only those portions of all systems of records maintained by the CIA that would consist of, pertain to, or otherwise reveal information that is:

(a) Classified pursuant to Executive Order 12958 (or successor or prior Order) and thus subject to the provisions of 5 U.S.C. 552(b)(1) and 5 U.S.C. 552a(k)(1);

(b) Investigatory in nature and compiled for law enforcement purposes, other than material within the scope of section (j)(2) of the Act; provided however, that if an individual is denied any right, privilege, or benefit to which they are otherwise eligible, as a result of the maintenance of such material, then such material shall be provided to that individual except to the extent that the disclosure would reveal the identity of a source who furnished the information to the United States Government under an express promise of confidentiality, or, prior to the effective date of this section, under an implied promise of confidentiality;

(c) Maintained in connection with providing protective services to the President of the United States or other individuals pursuant to 18 U.S.C. 3056;

(d) Required by statute to be maintained and used solely as statistical records;

(e) Investigatory in nature and compiled solely for the purpose of determining suitability, eligibility, or qualifications for federal civilian employment, military service, federal contracts, or access to classified information, but only to the extent that the disclosure of such material would reveal the identity of a source who furnished information to the United States Government under an express promise of confidentiality, or, prior to the effective date of this section, under an implied promise of confidentiality;

(f) Testing or examination material used solely to determine individual qualifications for appointment or promotion in the federal service the disclosure of which would compromise

the objectivity or fairness of the testing or examination process; or

(g) Evaluation material used to determine potential for promotion in the armed services, but only to the extent that the disclosure of such material would reveal the identity of a source who furnished information to the United States Government under an express promise of confidentiality, or, prior to the effective date of this section, under an implied promise of confidentiality.

PART 1907—CHALLENGES TO CLASSIFICATION OF DOCUMENTS BY AUTHORIZED HOLDERS PURSUANT TO § 1.9 OF EXECUTIVE ORDER 12958

General

Sec.
1907.01 Authority and purpose.
1907.02 Definitions.
1907.03 Contact for general information and requests.
1907.04 Suggestions and complaints.

Filing of Challenges

1907.11 Prerequisites.
1907.12 Requirements as to form.
1907.13 Identification of material at issue.
1907.14 Transmission.

Action on Challenges

1907.21 Receipt, recording, and tasking.
1907.22 Challenges barred by res judicata.
1907.23 Response by originator(s) and/or any interested party.
1907.24 Designation of authority to hear challenges.
1907.25 Action on challenge.
1907.26 Notification of decision and prohibition on adverse action.

Right of Appeal

1907.31 Right of appeal.

Authority: Executive Order 12958, 60 FR 19825, 3 CFR 1996 Comp., P. 333–356 (or successor orders).

General

§ 1907.01 Authority and purpose.

(a) *Authority.* This Part is issued under the authority of and in order to implement § 1.9 of Executive Order (E.O.) 12958, sec. 102 of the National Security Act of 1947, and sec. 6 of the CIA Act of 1949.

(b) *Purpose.* This part prescribes procedures for authorized holders of information classified under the various provisions of E.O. 12958, or predecessor Orders, to seek a review or otherwise challenge the classified status of information to further the interests of the United States Government. This part and § 1.9 of E.O. 12958 confer no rights upon members of the general public, or authorized holders acting in their personal capacity, both of whom shall continue to request reviews of classification under the mandatory declassification review provisions set forth at § 3.6 of E.O. 12958.

§ 1907.02 Definitions.

For purposes of this part, the following terms have the meanings as indicated:

(a) *Agency* or *CIA* means the United States Central Intelligence Agency acting through the CIA Information and Privacy Coordinator;

(b) *authorized holders* means any member of any United States executive department, military department, the Congress, or the judiciary (Article III) who holds a security clearance from or has been specifically authorized by the Central Intelligence Agency to possess and use on official business classified information, or otherwise has Constitutional authority pursuant to their office;

(c) *days* means calendar days when the Agency is operating and specifically excludes Saturdays, Sundays, and legal public holidays. Three (3) days may be added to any time limit imposed on a requester by this CFR Part if responding by U.S. domestic mail; ten (10) days may be added if responding by international mail;

(d) *challenge* means a request in the individual's official, not personal, capacity and in furtherance of the interests of the United States;

(e) *control* means ownership or the authority of the CIA pursuant to federal statute or privilege to regulate official or public access to records;

(f) *Coordinator* means the CIA Information and Privacy Coordinator acting in the capacity of Executive Secretary of the Agency Release Panel;

(g) *Information* means any knowledge that can be communicated or documentary material, regardless of its physical form, that is:

(1) Owned by, produced by or for, or under the control of the United States Government, and

(2) Lawfully and actually in the possession of an authorized holder and for which ownership and control has not been relinquished by the CIA;

(h) *Interested party* means any official in the executive, military, congressional, or judicial branches of government, United States or foreign, or U.S. Government contractor who, in the sole discretion of the CIA, has a subject matter or physical interest in the documents or information at issue;

(i) *Originator* means the CIA officer who originated the information at issue, or successor in office, or a CIA officer who has been delegated declassification authority for the information at issue in accordance with the provisions of this Order;

(j) *This Order* means Executive Order 12958 of April 17, 1995 and published at 60 FR 19825–19843 (or successor Orders).

§ 1907.03 Contact for general information and requests.

For information on this part or to file a challenge under this part, please direct your inquiry to the Executive Secretary, Agency Release Panel, Central Intelligence Agency, Washington, DC 20505. The commercial (non-secure) telephone is (703) 613–1287; the classified (secure) telephone for voice and facsimile is (703) 613–3007.

§ 1907.04 Suggestions and complaints.

The Agency welcomes suggestions or complaints with regard to its administration of the Executive Order. Letters of suggestion or complaint should identify the specific purpose and the issues for consideration. The Agency will respond to all substantive communications and take such actions as determined feasible and appropriate.

Filing of Challenges

§ 1907.11 Prerequisites.

The Central Intelligence Agency has established liaison and procedures with many agencies for declassification issues. Prior to reliance on this Part, authorized holders are required to first exhaust such established administrative procedures for the review of classified information. Further information on these procedures is available from the point of contact, see 32 CFR 1907.03.

§ 1907.12 Requirements as to form.

The challenge shall include identification of the challenger by full name and title of position, verification of security clearance or other basis of authority, and an identification of the documents or portions of documents or information at issue. The challenge shall also, in detailed and factual terms, identify and describe the reasons why it is believed that the information is not protected by one or more of the § 1.5 provisions, that the release of the information would not cause damage to the national security, or that the information should be declassified due to the passage of time. The challenge must be properly classified; in this regard, until the challenge is decided, the authorized holder must treat the challenge, the information being challenged, and any related or explanatory information as classified at the same level as the current classification of the information in dispute.

§ 1907.13 Identification of material at issue.

Authorized holders shall append the documents at issue and clearly mark those portions subject to the challenge. If information not in documentary form is in issue, the challenge shall state so clearly and present or otherwise refer with specificity to that information in the body of the challenge.

§ 1907.14 Transmission.

Authorized holders must direct challenge requests to the CIA as specified in § 1907.03. The classified nature of the challenge, as well as the appended documents, require that the holder transmit same in full accordance with established security procedures. In general, registered U.S. mail is approved for SECRET, non-compartmented material; higher classifications require use of approved Top Secret facsimile machines or CIA-approved couriers. Further information is available from the CIA as well as corporate or other federal agency security departments.

Action on Challenges

§ 1907.21 Receipt, recording, and tasking.

The Executive Secretary of the Agency Release Panel shall within ten (10) days record each challenge received under this Part, acknowledge receipt to the authorized holder, and task the originator and other interested parties. Additional taskings, as required during the review process, shall be accomplished within five (5) days of notification.

§ 1907.22 Challenges barred by res judicata.

The Executive Secretary of the Agency Release Panel shall respond on behalf of the Panel and deny any challenge where the information in question has been the subject of a classification review within the previous two (2) years or is the subject of pending litigation in the federal courts.

§ 1907.23 Response by originator(s) and/or any interested party.

(a) *In general.* The originator of the classified information (document) is a required party to any challenge; other interested parties may become involved through the request of the Executive Secretary or the originator when it is determined that some or all of the information is also within their official cognizance.

(b) *Determination.* These parties shall respond in writing to the Executive Secretary of the Agency Release Panel with a mandatory unclassified finding, to the greatest extent possible, and an optional classified addendum. This finding shall agree to a declassification or, in specific and factual terms, explain the basis for continued classification including identification of the category of information, the harm to national security which could be expected to result from disclosure, and, if older than ten (10) years, the basis for the extension of classification time under §§ 1.6 and 3.4 of this Order. These parties shall also provide a statement as to whether or not there is any other statutory, common law, or Constitutional basis for withholding as required by § 6.1(c) of this Order.

(c) *Time.* The determination(s) shall be provided on a ''first-in, first-out'' basis with respect to all challenges pending under this section and shall be accomplished expeditiously taking into account the requirements of the authorized holder as well as the business requirements of the originator including their responsibilities under the Freedom of Information Act, the Privacy Act, or the mandatory declassification review provisions of this Order.

§ 1907.24 Designation of authority to hear challenges.

The Deputy Director for Administration has designated the Agency Release Panel and the Historical Records Policy Board, established pursuant to 32 CFR 1900.41, as the Agency authority to hear and decide challenges under these regulations.

§ 1907.25 Action on challenge.

(a) *Action by Agency Release Panel.* The Executive Secretary shall place challenges ready for adjudication on the agenda at the next occurring meeting of the Agency Release Panel. The Executive Secretary shall provide a summation memorandum for consideration of the members; the complete package consisting of the challenge, the information at issue, and the findings of the originator and interested parties shall also be provided. The Agency Release Panel shall meet and decide challenges sitting as a committee of the whole. Decisions are by majority vote of those present at a meeting and shall be based on the written record and their deliberations; no personal appearances shall be permitted without the express permission of the Panel.

(b) *Action by Historical Records Policy Board.* In any cases of divided vote by the ARP, any member of that body is authorized to refer the request to the CIA Historical Records Policy Board which acts as the senior corporate board for the Agency. The record compiled (the request, the memoranda filed by the originator and interested parties, and the previous decision(s)) as well as any memorandum of law or policy the referent desires to be considered, shall be certified by the Executive Secretary of the Agency Release Panel and shall constitute the official record of the proceedings and must be included in any subsequent filings.

§ 1907.26 Notification of decision and prohibition on adverse action.

The Executive Secretary of the Agency Release Panel shall communicate the decision of the Agency to the authorized holder, the originator, and other interested parties within ten (10) days of the decision by the Panel or Board. That correspondence shall include a notice that no adverse action or retribution can be taken in regard to the challenge and that an appeal of the decision may be made to the Interagency Security Classification Appeals Panel (ISCAP) established pursuant to § 5.4 of this Order.

Right of Appeal

§ 1907.31 Right of appeal.

A right of appeal is available to the ISCAP established pursuant to § 5.4 of this Order. Action by that body will be the subject of rules to be promulgated by the Information Security Oversight Office (ISOO).

PART 1908—PUBLIC REQUESTS FOR MANDATORY DECLASSIFICATION REVIEW OF CLASSIFIED INFORMATION PURSUANT TO § 3.6 OF EXECUTIVE ORDER 12958

General

Sec.
1908.01 Authority and purpose.
1908.02 Definitions.
1908.03 Contact for general information and requests.
1908.04 Suggestions and complaints.

Filing of Mandatory Declassification Review (MDR) Requests

1908.11 Preliminary information.
1908.12 Requirements as to form.
1908.13 Fees.

Agency Action on MDR Requests

1908.21 Receipt, recording, and tasking.
1908.22 Requests barred by res judicata.
1908.23 Determination by originator or interested party.
1908.24 Notification of decision and right of appeal.

Agency Action on MDR Appeals

1908.31 Requirements as to time and form.
1908.32 Receipt, recording, and tasking.
1908.33 Determination by Deputy Director(s).

1908.34 Establishment of appeals structure.
1908.35 Action by appeals authority.
1908.36 Notification of decision and right of further appeal.

Further Appeals

1908.41 Right of further appeal.

Authority: Executive Orders 12958, 60 FR 19825, 3 CFR 1996 Comp., p. 333–356 (or successor Orders).

General

§ 1908.01 Authority and Purpose.

(a) *Authority.* This part is issued under the authority of and in order to implement § 3.6 of Executive Order (E.O.) 12958 (or successor Orders); the CIA Information Act of 1984 (50 U.S.C. 431); sec. 102 of the National Security Act of 1947, as amended (50 U.S.C. 403); and sec. 6 of the CIA Act of 1949, as amended (5 U.S.C. 403g).

(b) *Purpose.* This part prescribes procedures, subject to limitations set forth below, for members of the public to request a declassification review of information classified under the various provisions of this or predecessor Orders. Section 3.6 of E.O. 12958 and these regulations do not create any right or benefit, substantive or procedural, enforceable at law by a party against the United States, its agencies, officers, or employees.

§ 1908.02 Definitions.

For purposes of this part, the following terms have the meanings as indicated:

(a) *Agency* or *CIA* means the United States Central Intelligence Agency acting through the CIA Information and Privacy Coordinator;

(b) *Days* means calendar days when the Agency is operating and specifically excludes Saturdays, Sundays, and legal public holidays. Three (3) days may be added to any time limit imposed on a requester by this part if responding by U.S. domestic mail; ten (10) days may be added if responding by international mail;

(c) *Control* means ownership or the authority of the CIA pursuant to Federal statute or privilege to regulate official or public access to records;

(d) *Coordinator* means the CIA Information and Privacy Coordinator who serves as the Agency manager of the information review and release program instituted under the mandatory declassification review provisions of Executive Order 12958;

(e) *Federal agency* means any executive department, military department, or other establishment or entity included in the definition of agency in 5 U.S.C. 552(f);

(f) *Information* means any knowledge that can be communicated or documentary material, regardless of its physical form that is owned by, produced by or for, or under the control of the United States Government; it does not include:

(1) Information within the scope of the CIA Information Act, or

(2) Information originated by the incumbent President, White House Staff, appointed committees, commissions or boards, or any entities within the Executive Office that solely advise and assist the incumbent President;

(g) *Interested party* means any official in the executive, military, congressional, or judicial branches of government, United States or foreign, or U.S. Government contractor who, in the sole discretion of the CIA, has a subject matter or physical interest in the documents or information at issue;

(h) *NARA* means the National Archives and Records Administration;

(i) *Originator* means the CIA officer who originated the information at issue, or successor in office, or a CIA officer who has been delegated declassification authority for the information at issue in accordance with the provisions of this Order;

(j) *Presidential libraries* means the libraries or collection authorities established by statute to house the papers of former Presidents Hoover, Roosevelt, Truman, Eisenhower, Kennedy, Nixon, Ford, Carter, Reagan, Bush and similar institutions or authorities as may be established in the future;

(k) *Referral* means coordination with or transfer of action to an interested party;

(l) *This Order* means Executive Order 12958 of April 17, 1995 and published at 60 FR 19825–19843 (or successor Orders);

§ 1908.03 Contact for general information and requests.

For general information on this Part or to request a declassification review, please direct your communication to the Information and Privacy Coordinator, Central Intelligence Agency, Washington, DC 20505. Such inquiries will also be accepted by facsimile at (703) 613–3007. For general or status information only, the telephone number is (703) 613–1287. Collect calls cannot be accepted.

§ 1908.04 Suggestions and complaints.

The Agency welcomes suggestions or complaints with regard to its administration of the mandatory declassification review program established under Executive Order 12958. Many requesters will receive pre-paid, customer satisfaction survey cards. Letters of suggestion or complaint should identify the specific purpose and the issues for consideration. The Agency will respond to all substantive communications and take such actions as determined feasible and appropriate.

Filing of Mandatory Declassification Review (MDR) Requests

§ 1908.11 Preliminary information.

Members of the public shall address all communications to the point of contact specified above and clearly delineate the communication as a request under this regulation. Requests and appeals on requests received from members of the public who owe outstanding fees for information services under this Order or the Freedom of Information Act at this or another federal agency will not be accepted until such debts are resolved.

§ 1908.12 Requirements as to form.

The request shall identify the document(s) or material(s) with sufficient specificity (e.g., National Archives and Records Administration (NARA) Document Accession Number or other applicable, unique document identifying number) to enable the Agency to locate it with reasonable effort. Broad or topical requests for records on a particular subject may not be accepted under this provision. A request for documents contained in the various Presidential libraries shall be effected through the staff of such institutions who shall forward the document(s) in question for Agency review. The requester shall also provide sufficient personal identifying information when required by the Agency to satisfy requirements of this part.

§ 1908.13 Fees.

Requests submitted via NARA or the various Presidential libraries shall be responsible for reproduction costs required by statute or regulation. Requests made directly to this Agency will be liable for costs in the same amount and under the same conditions as specified in 32 CFR part 1900.

Agency Action on MDR Requests

§ 1908.21 Receipt, recording, and tasking.

The Information and Privacy Coordinator shall within ten (10) days record each mandatory declassification review request received under this part, acknowledge receipt to the requester in writing (if received directly from a requester), and shall thereafter task the originator and other interested parties. Additional taskings, as required during

the review process, shall be accomplished within ten (10) days of notification.

§ 1908.22 Requests barred by res judicata.

The Coordinator shall respond to the requester and deny any request where the information in question has been the subject of a classification review within the previous two (2) years or is the subject of pending litigation in the federal courts.

§ 1908.23 Determination by originator or interested party.

(a) *In general.* The originator of the classified information (document) is a required party to any mandatory declassification review request; other interested parties may become involved through a referral by the Coordinator when it is determined that some or all of the information is also within their official cognizance.

(b) *Required determinations.* These parties shall respond in writing to the Coordinator with a finding as to the classified status of the information including the category of protected information as set forth in § 1.5 of this Order, and, if older than ten (10) years, the basis for the extension of classification time under §§ 1.6 and 3.4 of this Order. These parties shall also provide a statement as to whether or not there is any other statutory, common law, or Constitutional basis for withholding as required by § 6.1(c) of this Order.

(c) *Time.* This response shall be provided expeditiously on a ''first-in, first-out'' basis taking into account the business requirements of the originator or interested parties and consistent with the information rights of members of the general public under the Freedom of Information Act and the Privacy Act.

§ 1908.24 Notification of decision and right of appeal.

The Coordinator shall communicate the decision of the Agency to the requester within ten (10) days of completion of all review action. That correspondence shall include a notice of a right of administrative appeal to the Agency Release Panel pursuant to § 3.6(d) of this Order.

Agency Action on MDR Appeals

§ 1908.31 Requirements as to time and form.

Appeals of decisions must be received by the Coordinator within forty-five (45) days of the date of mailing of the Agency's initial decision. It shall identify with specificity the documents or information to be considered on appeal and it may, but need not, provide a factual or legal basis for the appeal.

§ 1908.32 Receipt, recording, and tasking.

The Coordinator shall promptly record each appeal received under this part, acknowledge receipt to the requester, and task the originator and other interested parties. Additional taskings, as required during the review process, shall be accomplished within ten (10) days of notification.

§ 1908.33 Determination by Deputy Director(s).

Each Deputy Director in charge of a directorate which originated or has an interest in any of the records subject to the appeal, or designee, is a required party to any appeal; other interested parties may become involved through the request of the Coordinator when it is determined that some or all of the information is also within their official cognizance. These parties shall respond in writing to the Coordinator with a finding as to the classified status of the information including the category of protected information as set forth in § 1.5 of this Order, and, if older than ten (10) years, the basis for continued classification under §§ 1.6 and 3.4 of this Order. These parties shall also provide a statement as to whether or not there is any other statutory, common law, or Constitutional basis for withholding as required by § 6.1(c) of this Order. This response shall be provided expeditiously on a ''first-in, first-out'' basis taking into account the business requirements of the parties and consistent with the information rights of members of the general public under the Freedom of Information Act and the Privacy Act.

§ 1908.34 Establishment of appeals structure.

(a) *In general.* Two administrative entities have been established by the Director of Central Intelligence to facilitate the processing of administrative appeals under the mandatory declassification review provisions of this Order. Their membership, authority, and rules of procedure are as follows.

(b) *Historical Records Policy Board (''HRPB'' or ''Board'').* This Board, the successor to the CIA Information Review Committee, acts as the senior corporate board in the CIA on all matters of information review and release. It is composed of the Executive Director, who serves as its Chair, the Deputy Director for Administration, the Deputy Director for Intelligence, the Deputy Director for Operations, the Deputy Director for Science and Technology, the General Counsel, the Director of Congressional Affairs, the Director of the Public Affairs Staff, the Director, Center for the Study of Intelligence, and the Associate Deputy Director for Administration/Information Services, or their designees. The Board, by majority vote, may delegate to one or more of its members the authority to act on any appeal or other matter or authorize the Chair to delegate such authority, as long as such delegation is not to the same individual or body who made the initial denial. The Executive Secretary of the HRPB is the Director, Information Management. The Chair may request interested parties to participate when special equities or expertise are involved.

(c) *Agency Release Panel (''ARP'' or ''Panel'').* The HRPB, pursuant to its delegation of authority, has established a subordinate Agency Release Panel. This Panel is composed of the Director, Information Management, who serves as its Chair; the Information Review Officers from the Directorates of Administration, Intelligence, Operations, Science and Technology, and the Director of Central Intelligence Area; the CIA Information and Privacy Coordinator; the Chief, Historical Review Group; the Chair, Publications Review Board; the Chief, Records Declassification Program; and representatives from the Offices of General Counsel and Congressional Affairs, and the Public Affairs Staff. The Information and Privacy Coordinator also serves as the Executive Secretary of the Panel. The Panel advises and assists the HRPB on all information release issues, monitors the adequacy and timeliness of Agency releases, sets component search and review priorities, reviews adequacy of resources available to and planning for all Agency release programs, and performs such other functions as deemed necessary by the Board. The Chair may request interested parties to participate when special equities or expertise are involved. The Panel, functioning as a committee of the whole or through individual members, will make final Agency decisions from appeals of initial denial decisions under E.O. 12958. Issues not resolved by the Panel will be referred by the Panel to the HRPB. Matters decided by the Panel or Board will be deemed a final decision by the Agency.

§ 1908.35 Action by appeals authority.

(a) *Action by Agency Release Panel.* The Coordinator, in his or her capacity as Executive Secretary of the Agency Release Panel, shall place appeals of mandatory declassification review requests ready for adjudication on the

agenda at the next occurring meeting of the Agency Release Panel. The Executive Secretary shall provide a summation memorandum for consideration of the members, the complete record of the request consisting of the request, the document(s) (sanitized and full text) at issue, and the findings of the originator and interested parties. The Panel shall meet and decide requests sitting as a committee of the whole. Decisions are by majority vote of those present at a meeting and shall be based on the written record and their deliberations; no personal appearances shall be permitted without the express permission of the Panel.

(b) *Action by Historical Records Policy Board.* In any cases of divided vote by the ARP, any member of that body is authorized to refer the request to the CIA Historical Records Policy Board which acts as the senior corporate board for the Agency. The record compiled (the request, the memoranda filed by the originator and interested parties, and the previous decision(s)) as well as any memorandum of law or policy the referent desires to be considered, shall be certified by the Executive Secretary of the Agency Release Panel and shall constitute the official record of the proceedings and must be included in any subsequent filings.

§ 1908.36 Notification of decision and right of further appeal.

The Coordinator shall communicate the decision of the Panel or Board to the requester, NARA, or the particular Presidential Library within ten (10) days of such decision. That correspondence shall include a notice that an appeal of the decision may be made to the Interagency Security Classification Appeals Panel (ISCAP) established pursuant to § 5.4 of this Order.

Further Appeals

§ 1908.41 Right of Further Appeal.

A right of further appeal is available to the ISCAP established pursuant to § 5.4 of this Order. Action by that Panel will be the subject of rules to be promulgated by the Information Security Oversight Office (ISOO).

PART 1909—ACCESS BY HISTORICAL RESEARCHERS AND FORMER PRESIDENTIAL APPOINTEES PURSUANT TO § 4.5 OF EXECUTIVE ORDER 12958

General

Sec.
1909.01 Authority and purpose.
1909.02 Definitions.
1909.03 Contact for general information and requests.
1909.04 Suggestions and complaints.

Requests for Historical Access

1909.11 Requirements as to who may apply.
1909.12 Designations of authority to hear requests.
1909.13 Receipt, recording, and tasking.
1909.14 Determinations by tasked officials.
1909.15 Action by hearing authority.
1909.16 Action by appeal authority.
1909.17 Notification of decision.
1909.18 Termination of access.

Authority: Executive Order 12958, 60 FR 19825. 3 CFR 1996 Comp., p. 333–356 (or successor Orders).

General

§ 1909.01 Authority and purpose.

(a) **Authority.** This part is issued under the authority of and in order to implement § 4.5 of Executive Order 12958 (or successor Orders); the CIA Information Act of 1984 (50 U.S.C. 431); sec. 102 of the National Security Act of 1947, as amended (50 U.S.C. 403); and sec. 6 of the Central Intelligence Agency Act of 1949, as amended (50 U.S.C. 403g).

(b) *Purpose.* (1) This part prescribes procedures for:

(i) Requesting access to CIA records for purposes of historical research, or

(ii) Requesting access to CIA records as a former Presidential appointee.

(2) Section 4.5 of Executive Order 12958 and these regulations do not create any right or benefit, substantive or procedural, enforceable at law by a party against the United States, its agencies, officers, or employees.

§ 1909.02 Definitions.

For purposes of this part, the following terms have the meanings indicated:

(a) *Agency* or *CIA* means the United States Central Intelligence Agency acting through the CIA Information and Privacy Coordinator;

(b) *Agency Release Panel* or *Panel* or *ARP* means the CIA Agency Release Panel established pursuant to 32 CFR 1900.41;

(c) *Days* means calendar days when the Agency is operating and specifically excludes Saturdays, Sundays, and legal public holidays. Three (3) days may be added to any time limit imposed on a requester by this part if responding by U.S. domestic mail; ten (10) days may be added if responding by international mail;

(d) *Control* means ownership or the authority of the CIA pursuant to federal statute or privilege to regulate official or public access to records;

(e) *Coordinator* means the CIA Information and Privacy Coordinator who serves as the Agency manager of the historical access program established pursuant to § 4.5 of this Order;

(f) *Director, Center for the Study of Intelligence* or ''D/CSI'' means the Agency official responsible for the management of the CIA's various historical programs including the management of access granted under this section;

(g) *Director of Personnel Security* means the Agency official responsible for making all security and access approvals and for effecting the necessary non-disclosure and/or pre-publication agreements as may be required;

(h) *Federal agency* means any executive department, military department, or other establishment or entity included in the definition of agency in 5 U.S.C. 552(f);

(i) *Former Presidential appointee* means any person who has previously occupied a policy-making position in the executive branch of the United States Government to which they were appointed by the current or former President and confirmed by the United States Senate;

(j) *Historian* or *historical researcher* means any individual with professional training in the academic field of history (or related fields such as journalism) engaged in a research project leading to publication (or any similar activity such as academic course development) reasonably intended to increase the understanding of the American public into the operations and activities of the United States government;

(k) *Information* means any knowledge that can be communicated or documentary material, regardless of its physical form that is owned by, produced by or for, or is under the control of the United States Government;

(l) *Interested party* means any official in the executive, military, congressional, or judicial branches of government, United States or foreign, or U.S. Government contractor who, in the sole discretion of the CIA, has a subject matter or physical interest in the documents or information at issue;

(m) *Originator* means the CIA officer who originated the information at issue, or successor in office, or a CIA officer who has been delegated declassification authority for the information at issue in accordance with the provisions of this Order;

(n) *This Order* means Executive Order 12958 of April 17 1995 and published at 60 FR 19825-19843 (or successor Orders).

§ 1909.03 Contact for general information and requests.

For general information on this Part, to inquire about historical access to CIA records, or to make a formal request for such access, please direct your communication in writing to the Information and Privacy Coordinator, Central Intelligence Agency, Washington, DC. 20505. Inquiries will also be accepted by facsimile at (703) 613–3007. For general information only, the telephone number is (703) 613–1287. Collect calls cannot be accepted.

§ 1909.04 Suggestions and complaints.

The Agency welcomes suggestions or complaints with regard to its administration of the historical access program established pursuant to Executive Order 12958. Letters of suggestion or complaint should identify the specific purpose and the issues for consideration. The Agency will respond to all substantive communications and take such actions as determined feasible and appropriate.

Requests for Historical Access

§ 1909.11 Requirements as to who may apply.

(a) *Historical researchers:*—(1) *In general.* Any historian engaged in a historical research project as defined above may submit a request in writing to the Coordinator to be given access to classified information for purposes of that research. Any such request shall indicate the nature, purpose, and scope of the research project.

(2) *Additional considerations.* In light of the very limited resources for the Agency's various historical programs, it is the policy of the Agency to consider applications for historical research privileges only in those instances where the researcher's needs cannot be satisfied through requests for access to reasonably described records under the Freedom of Information Act or the mandatory declassification review provisions of Executive Order 12958 *and* where issues of internal resource availability and fairness to all members of the historical research community militate in favor of a particular grant.

(b) *Former Presidential appointees.* Any former Presidential appointee as defined herein may also submit a request to be given access to any classified records which they originated, reviewed, signed, or received while serving in that capacity. Such appointees may also request approval for a research associate but there is no entitlement to such enlargement of access and the decision in this regard shall be in the sole discretion of the Agency. Requests from appointees shall be in writing to the Coordinator and shall identify the records of interest.

§ 1909.12 Designations of authority to hear requests.

The Deputy Director for Administration has designated the Coordinator, the Agency Release Panel, and the Historical Records Policy Board, established pursuant to 32 CFR 1900.41, as the Agency authorities to decide requests for historical and former Presidential appointee access under Executive Order 12958 (or successor Orders) and these regulations.

§ 1909.13 Receipt, recording, and tasking.

The Information and Privacy Coordinator shall within ten (10) days record each request for historical access received under this Part, acknowledge receipt to the requester in writing and take the following action:

(a) *Compliance with general requirements.* The Coordinator shall review each request under this part and determine whether it meets the general requirements as set forth in 32 CFR 1909.11; if it does not, the Coordinator shall so notify the requester and explain the legal basis for this decision.

(b) *Action on requests meeting general requirements.* For requests which meet the requirements of 32 CFR 1909.11, the Coordinator shall thereafter task the D/CSI, the originator(s) of the materials for which access is sought, and other interested parties. Additional taskings, as required during the review process, shall be accomplished within ten (10) days of notification.

§ 1909.14 Determinations by tasked officials.

(a) *Required determinations.* The tasked parties as specified below shall respond in writing to the Coordinator with recommended findings to the following issues:

(1) That a serious professional or scholarly research project by the requester is contemplated (by D/CSI);

(2) That such access is clearly consistent with the interests of national security (by originator and interested party, if any);

(3) That a non-disclosure agreement has been or will be executed by the requester (or research associate, if any) and other appropriate steps have been taken to assure that classified information will not be disclosed or otherwise compromised (by Director of Personnel Security and representative of the Office of General Counsel);

(4) That a pre-publication agreement has been or will be executed by the requester (or research associate, if any) which provides for a review of notes and any resulting manuscript (by Director of Personnel Security and representative of the Office of General Counsel);

(5) That the information requested is reasonably accessible and can be located and compiled with a reasonable effort (by D/CSI and originator);

(6) That it is reasonably expected that substantial and substantive government documents and/or information will be amenable to declassification and release and/or publication (by D/CSI and originator);

(7) That sufficient resources are available for the administrative support of the researcher given current mission requirements (by D/CSI and originator); and,

(8) That the request cannot be satisfied to the same extent through requests for access to reasonably described records under the Freedom of Information Act or the mandatory declassification review provisions of Executive Order 12958 (by Coordinator, D/CSI and originator).

(b) *Time.* These responses shall be provided expeditiously on a ''first-in, first-out'' basis taking into account the business requirements of the tasked offices and consistent with the information rights of members of the general public under the Freedom of Information Act and the Privacy Act. The Agency will utilize its best efforts to complete action on requests under this part within thirty (30) days of date of receipt.

§ 1909.15 Action by hearing authority.

Action by Agency Release Panel. The Coordinator, in his or her capacity as Executive Secretary of the Agency Release Panel, shall place historical access requests ready for adjudication on the agenda at the next occurring meeting of the Agency Release Panel. The Executive Secretary shall provide a summation memorandum for consideration of the members, the complete record of the request consisting of the request and the findings of the tasked parties. The Panel shall meet and decide requests sitting as a committee of the whole on the basis of the eight factors enumerated at 32 CFR 1909.14(a). Decisions are by majority vote of those present at a meeting and shall be based on the written record and their deliberations; no personal appearances shall be permitted without the express permission of the Panel.

§ 1909.16 Action by appeal authority.

In any cases of divided vote by the ARP, any member of that body is authorized to refer the request to the

CIA Historical Records Policy Board which acts as the senior corporate board for the Agency. The record compiled (the request, the memoranda filed by the originator and interested parties, and the previous decision(s)) as well as any memorandum of law or policy the referent desires to be considered, shall be certified by the Executive Secretary of the Agency Release Panel and shall constitute the official record of the proceedings and must be included in any subsequent filings. In such cases, the factors to be determined as specified in 32 CFR 1909.14(a) will be considered by the Board de novo and that decision shall be final.

§ 1909.17 Notification of decision.

The Coordinator shall inform the requester of the decision of the Agency Release Panel or the Historical Records Policy Board within ten (10) days of the decision and, if favorable, shall manage the access for such period as deemed required but in no event for more than two (2) years unless renewed by the Panel or Board in accordance with the requirements of 32 CFR 1909.14(a).

§ 1909.18 Termination of access.

The Coordinator shall cancel any authorization whenever the Director of Personnel Security cancels the security clearance of a requester (or research associate, if any) or whenever the Agency Release Panel determines that continued access would not be in compliance with one or more of the requirements of 32 CFR 1909.14(a).

[FR Doc. 97–14883 Filed 6–13–97; 8:45 am]

BILLING CODE 6310–02–M

ENVIRONMENTAL PROTECTION AGENCY

40 CFR Part 51

[FRL–5836–1]

RIN 2060–AF02

Preparation, Adoption, and Submittal of State Implementation Plans; Appendix M, Test Methods 204, 204A–204F

AGENCY: Environmental Protection Agency (EPA).

ACTION: Final rule.

SUMMARY: This rule adds seven methods to Appendix M of 40 CFR Part 51 for capture efficiency (CE) testing to assist States in adopting enforceable CE measurement protocols into their State implementation plans (SIP's) for ozone. These final methods, in conjunction with the protocols, would also improve EPA's ability to enforce State regulations to reduce volatile organic compounds (VOC) emissions in ozone nonattainment areas.

EFFECTIVE DATE: These methods are effective June 16, 1997.

ADDRESSES: *Docket.* A Docket A–91–70, containing materials relevant to this rulemaking, is available for public inspection and copying between 8:00 a.m.–5:30 p.m., Monday through Friday, at the EPA's Air Docket Section Mail Code: 6102, Room M–1500, Waterside Mall (ground floor), 401 M Street, S.W., Washington D.C. 20460. A reasonable fee may be charged for copying.

FOR FURTHER INFORMATION CONTACT: Candace Sorrell, Source Characterization Group A (MD–19), Emissions, Monitoring, and Analysis Division, U.S. Environmental Protection Agency, Research Triangle Park, North Carolina 27711, telephone (919) 541–1064.

SUPPLEMENTARY INFORMATION:

I. The Rulemaking

This rulemaking adds seven methods for measuring CE to Appendix M of 40 CFR Part 51 to provide methods that States can use in their SIP's.

II. Public Participation

The proposed rulemaking was published in the **Federal Register** (FR) on August 2, 1995 (60 FR 39297).

The opportunity to hold a public hearing on August 30, 1995 at 10 a.m. was presented in the proposal notice, but no one desired to make an oral presentation. The public comment period was from August 2, 1995 to October 2, 1995.

III. Electronic Access

The background information document for the promulgated test methods is available on the Technology Transfer Network (TTN) on the EPA's electronic bulletin boards. The document is entitled ''Summary of Comments and Responses for Methods 204, 204A–F.'' If necessary, a limited number of copies are available from Candace Sorrell, MD–19, U.S. EPA, Research Triangle Park, North Carolina 27711, telephone number (919) 541–1064.

IV. Significant Comments and Changes to the Proposed Rulemaking

Six comment letters were received from the proposal rulemaking. A detailed discussion of these comments is contained in the background document entitled ''Summary of Comments and Responses for Methods 204, 204A–F,'' which is referred to in the **SUPPLEMENTARY INFORMATION** section of this preamble. The major comments raised in these letters and the Agency's responses follow.

One commenter points out that even though Methods 204B and 204C measure the same parameter, captured VOC stream, the applicability sections of the methods were not consistent with respect to what type of material balance is permissible.

The EPA reviewed the applicability section for both methods and determined that there was an error in Method 204B. Method 204B is intended to be used only in a gas/gas protocol, not in a liquid/gas protocol. The method has been revised to correct this error.

One commenter suggests for Method 204D, section 8.2.4, and Method 204E, section 8.4, that EPA make it explicit that if on site gas chromatography (GC) is used as an alternative to flame ionization analyzers (FIA) than GC must also be used to measure the VOC concentration of the other gas or liquid steams.

The Agency agrees that further explanation is needed to explain that if a facility is conducting a gas/gas test and chooses to use the alternative GC procedure, it must use the GC procedure for both the captured and fugitive stream. If a facility wishes to conduct a liquid/gas test using GC, the facility must use Method 204F for the liquid steam. A GC is not an acceptable alternative to the FIA in Method 204A.

Another commenter suggests that Figure 204–1 of Method 204 be expanded to address capture efficiencies less than 80 percent since lower values are allowed in the current Reasonably Available Control Technology (RACT) rules.

The EPA agrees that further guidance is needed and has added an equation to section 7.2 to help in estimating the ventilation rate at different capture efficiencies.

Three commenters mention that Method 204A, section 11, the estimated uncertainty of 12 percent for the VOC fraction seemed too high.

The EPA went back and reviewed the method evaluation report and discovered that the 12 percent is an error. The estimated uncertainty for this method is 4.0 percent. The method has been revised to correct this error.

Two commenters note that several references in Method 204, sections 5.5 and 6.1, were incorrect.

The EPA agrees that several references in those sections are incorrect. The method has been revised to correct these errors.

A commenter suggests that section 8.4 of Method 204 be revised to be consistent with the Aerospace NESHAP concerning the verification of air flow direction.

The EPA agrees with the comment and the method has been revised to reflect these changes.

One commenter feels that dilutions systems calibrated using Method 205 should be allowed without approval of the Administrator in Methods 204A–E, section 5.1 and Method 204F, section 5.3.

The EPA agrees that calibration gas can be prepared using dilution systems calibrated using Method 205 without approval of the Administrator and the methods have been revised.

A commenter requested that Methods 204A–204F be revised to not automatically invalidate the CE results if the drift check is in excess of the proposed 3 percent calibration drift requirement. In such situations the method should allow the FIA to be recalibrated and whichever calibration results in the ''worst case'' results be reported.

The EPA agrees with the comment and the methods have been revised.

One commenter suggests that Methods 204A–E, section 5.1.1 and Method 204F, section 5.3.1, be revised to allow for the use of hydrogen in air if appropriate adjustments are made to eliminate the oxygen synergism effect.

The Agency agrees that alternative mixtures should be allowed if the user can demonstrate to the Administrator that there is no oxygen synergism effect. The method has been revised to allow alternative mixtures.

One commenter notes that in Methods 204, 204A–F the term ''fugitive emissions'' is used in a manner inconsistent with the definition contained in 40 CFR 51.165(a)(1)(ix). The commenter suggests the word ''fugitive'' should be changed to ''uncaptured.''

The Agency agrees and the methods have been revised to change ''fugitive'' to ''uncaptured.''

A commenter feels that in Method 204A and 204F the required accuracy of the input weight determinations should be changed to allow the balance/digital scales to weigh within 2 lbs instead of the proposed 0.2 lb.

The Agency believes that it is very important to get an accurate measurement of the amount of coating used during a test and that scales that read to within 2 lbs are not accurate enough in most test situations. However, after reviewing this issue, the Agency also feels that the 0.2 lb limit may be too restrictive in some situations. Therefore, the method has been revised to read ''within 0.2 lb or 1.0 percent of the total weight of VOC liquid used.''

The EPA has recently discovered that the pressure drop specified in section 8.3 of Method 204, which is suppose to correspond to the minimum required face velocity of 3,600 m/hr (200 fpm), is too low. According to the twenty first edition of the ''Industrial Ventilation'' handbook dated 1992 the required pressure drop is 0.013 mm Hg (0.007 in. H_2O). Therefore, Method 204 has been revised to reflect this finding.

IV. Administrative Requirements

A. Docket

The docket is an organized and complete file for all information submitted or otherwise considered by EPA in the development of this promulgated rulemaking. The principal purposes of the docket are: (1) To allow interested parties to identify and locate documents so that they can effectively participate in the rulemaking process, and

(2) To serve as the record in case of judicial review (except for interagency review materials) [Clean Air Act Section 307(d)(7)(A)].

B. Office of Management and Budget Review

Under Executive Order 12866 (58 FR 51735 October 4, 1993), the EPA is required to judge whether a regulation is ''significant'' and therefore subject to Office of Management and Budget (OMB) review and the requirements of this Executive Order to prepare a regulatory impact analysis (RIA). The Order defines ''significant regulatory action'' as one that is likely to result in a rule that may: (1) Have an annual effect on the economy of $100 million or more or adversely affect in a material way the economy, a sector of the economy, productivity, competition, jobs, the environment, public health or safety, or State, local, or tribal governments or communities; (2) create a serious inconsistency or otherwise interfere with an action taken or planned by another agency; (3) materially alter the budgetary impact of entitlements, grants, user fees, or loan programs, or the rights and obligation of recipients thereof; or (4) raise novel legal or policy issues arising out of legal mandates, the President's priorities, or the principles set forth in the Executive Order. Pursuant to the terms of the Executive Order, this action has been determined to be ''not significant.''

C. Regulatory Flexibility Act Compliance

The EPA has determined that it is not necessary to prepare a regulatory flexibility analysis in connection with this final rule. The EPA has also determined that this rule will not have a significant adverse impact on a substantial number of small businesses. This rulemaking does not impose emission measurement requirements beyond those specified in the current regulations, nor does it change any emission standard. As such, it will not present a significant economic impact on a substantial number of small businesses.

D. Paperwork Reduction Act

The rule does not change any information collection requirements subject of Office of Management and Budget review under the Paperwork Reduction Act of 1980, 44 U.S.C. 3501 *et seq.*

E. Unfunded Mandates

Under Section 202 of the Unfunded Mandates Reform Act of 1995 (''Unfunded Mandates Act''), signed into law on March 22, 1995, EPA must prepare a budgetary impact statement to accompany any proposed or final rule that includes a Federal mandate that may result in estimated costs to State, local, or tribal governments in the aggregate; or to the private sector, of $100 million or more. Under Section 205, EPA must select the most cost-effective and least burdensome alternative that achieves the objectives of the rule and is consistent with statutory requirements. Section 203 requires EPA to establish a plan for significantly or uniquely impacted by the rule.

EPA has determined that this final action does not include a Federal mandate that may result in estimated costs of $100 million or more to either State, local, or tribal governments in the aggregate, or to the private sector, nor does this action significantly or uniquely impact small governments, because this action contains no requirements that apply to such governments or impose obligations upon them. Therefore, the requirements of the Unfunded Mandates Act do not apply to this action.

F. Submission to Congress and the General Accounting Office

Under 5 U.S.C. 801(a)(1)(A) of the Administrative Procedures Act (APA), as added by the Small Business Regulatory Enforcement Fairness Act of 1996, the EPA submitted a report containing this rule and other required

information to the U.S. Senate, the U.S. House of Representatives and the Comptroller General of the General Accounting Office prior to publication of the rule in today's **Federal Register**. This rule is not a ''major rule'' as defined by 5 U.S.C. 804(2).

List of Subjects in 40 CFR Part 51

Environmental protection, Administrative practice and procedure, Air pollution control, Capture efficiency, Carbon monoxide, Intergovernmental relations, Lead, Nitrogen dioxide, Ozone, Particulate matter, Printing operations, Reporting and recordkeeping requirements, Surface coating operations, Sulfur oxides, Volatile organic compounds.

Dated: May 30, 1997.

Carol M. Browner,

Administrator.

For the reasons set out in the preamble, Appendix M of 40 CFR Part 51 is amended as follows:

1. The authority citation for part 51 continues to read as follows:

Authority: 42 U.S.C. 7410.

2. Appendix M, Table of Contents is amended by adding seven entries to read as follows:

Appendix M to Part 51—Recommended Test Methods for State Implementation Plans

* * * * *

Method 204—Criteria for and Verification of a Permanent or Temporary Total Enclosure.

Method 204A—Volatile Organic Compounds Content in Liquid Input Stream.

Method 204B—Volatile Organic Compounds Emissions in Captured Stream.

Method 204C—Volatile Organic Compounds Emissions in Captured Stream (Dilution Technique).

Method 204D—Volatile Organic Compounds Emissions in Uncaptured Stream from Temporary Total Enclosure.

Method 204E—Volatile Organic Compounds Emissions in Uncaptured Stream from Building Enclosure.

Method 204F—Volatile Organic Compounds Content in Liquid Input Stream (Distillation Approach).

* * * * *

3. By adding Method 204 to read as follows:

Method 204—Criteria for and Verification of a Permanent or Temporary Total Enclosure

1. Scope and Application

This procedure is used to determine whether a permanent or temporary enclosure meets the criteria for a total enclosure. An existing building may be used as a temporary or permanent enclosure as long as it meets the appropriate criteria described in this method.

2. Summary of Method

An enclosure is evaluated against a set of criteria. If the criteria are met and if all the exhaust gases from the enclosure are ducted to a control device, then the volatile organic compounds (VOC) capture efficiency (CE) is assumed to be 100 percent, and CE need not be measured. However, if part of the exhaust gas stream is not ducted to a control device, CE must be determined.

3. Definitions

3.1 Natural Draft Opening (NDO). Any permanent opening in the enclosure that remains open during operation of the facility and is not connected to a duct in which a fan is installed.

3.2 Permanent Total Enclosure (PE). A permanently installed enclosure that completely surrounds a source of emissions such that all VOC emissions are captured and contained for discharge to a control device.

3.3 Temporary Total Enclosure (TTE). A temporarily installed enclosure that completely surrounds a source of emissions such that all VOC emissions that are not directed through the control device (i.e. uncaptured) are captured by the enclosure and contained for discharge through ducts that allow for the accurate measurement of the uncaptured VOC emissions.

3.4 Building Enclosure (BE). An existing building that is used as a TTE.

4. Safety

An evaluation of the proposed building materials and the design for the enclosure is recommended to minimize any potential hazards.

5. Criteria for Temporary Total Enclosure

5.1 Any NDO shall be at least four equivalent opening diameters from each VOC emitting point unless otherwise specified by the Administrator.

5.2 Any exhaust point from the enclosure shall be at least four equivalent duct or hood diameters from each NDO.

5.3 The total area of all NDO's shall not exceed 5 percent of the surface area of the enclosure's four walls, floor, and ceiling.

5.4 The average facial velocity (FV) of air through all NDO's shall be at least 3,600 m/hr (200 fpm). The direction of air flow through all NDO's shall be into the enclosure.

5.5 All access doors and windows whose areas are not included in section 5.3 and are not included in the calculation in section 5.4 shall be closed during routine operation of the process.

6. Criteria for a Permanent Total Enclosure

6.1 Same as sections 5.1 and 5.3 through 5.5.

6.2 All VOC emissions must be captured and contained for discharge through a control device.

7. Quality Control

7.1 The success of this method lies in designing the TTE to simulate the conditions that exist without the TTE (i.e., the effect of the TTE on the normal flow patterns around the affected facility or the amount of uncaptured VOC emissions should be minimal). The TTE must enclose the application stations, coating reservoirs, and all areas from the application station to the oven. The oven does not have to be enclosed if it is under negative pressure. The NDO's of the temporary enclosure and an exhaust fan must be properly sized and placed.

7.2 Estimate the ventilation rate of the TTE that best simulates the conditions that exist without the TTE (i.e., the effect of the TTE on the normal flow patterns around the affected facility or the amount of uncaptured VOC emissions should be minimal). Figure 204–1 or the following equation may be used as an aid.

$$CE = \frac{Q_G C_G}{Q_G C_G + Q_F C_F} \qquad \text{Eq. 204-1}$$

Measure the concentration (C_G) and flow rate (Q_G) of the captured gas stream, specify a safe concentration (C_F) for the uncaptured gas stream, estimate the CE, and then use the plot in Figure 204–1 or Equation 204–1 to determine the volumetric flow rate of the uncaptured gas stream (QF). An exhaust fan that has a variable flow control is desirable.

7.3 Monitor the VOC concentration of the captured gas steam in the duct before the capture device without the TTE. To minimize the effect of temporal variation on the captured emissions, the baseline measurement should be made over as long a time period as practical. However, the process conditions must be the same for the measurement in section 7.5 as they are for this baseline measurement. This may require short measuring times for this quality control check before and after the construction of the TTE.

7.4 After the TTE is constructed, monitor the VOC concentration inside the TTE. This concentration should not continue to increase, and must not exceed the safe level according to

Occupational Safety and Health Administration requirements for permissible exposure limits. An increase in VOC concentration indicates poor TTE design.

7.5 Monitor the VOC concentration of the captured gas stream in the duct before the capture device with the TTE. To limit the effect of the TTE on the process, the VOC concentration with and without the TTE must be within 10 percent. If the measurements do not agree, adjust the ventilation rate from the TTE until they agree within 10 percent.

8. Procedure

8.1 Determine the equivalent diameters of the NDO's and determine the distances from each VOC emitting point to all NDO's. Determine the equivalent diameter of each exhaust duct or hood and its distance to all NDO's. Calculate the distances in terms of equivalent diameters. The number of equivalent diameters shall be at least four.

8.2 Measure the total surface area (A_T) of the enclosure and the total area (A_N) of all NDO's in the enclosure. Calculate the NDO to enclosure area ratio (NEAR) as follows:

$$NEAR = \frac{A_N}{A_T} \qquad \text{Eq. 204-2}$$

The NEAR must be ≤10.05.

8.3 Measure the volumetric flow rate, corrected to standard conditions, of each gas stream exiting the enclosure through an exhaust duct or hood using EPA Method 2. In some cases (e.g., when the building is the enclosure), it may be necessary to measure the volumetric flow rate, corrected to standard conditions, of each gas stream entering the enclosure through a forced makeup air duct using Method 2. Calculate FV using the following equation:

$$FV = \frac{Q_O - Q_I}{A_N} \qquad \text{Eq. 204-3}$$

where:

Q_O = the sum of the volumetric flow from all gas streams exiting the enclosure through an exhaust duct or hood.

Q_I = the sum of the volumetric flow from all gas streams into the enclosure through a forced makeup air duct; zero, if there is no forced makeup air into the enclosure.

A_N = total area of all NDO's in enclosure.

The FV shall be at least 3,600 m/hr (200 fpm). Alternatively, measure the pressure differential across the enclosure. A pressure drop of 0.013 mm Hg (0.007 in. H_2O) corresponds to an FV of 3,600 m/hr (200 fpm).

8.4 Verify that the direction of air flow through all NDO's is inward. If FV is less than 9,000 m/hr (500 fpm), the continuous inward flow of air shall be verified using streamers, smoke tubes, or tracer gases. Monitor the direction of air flow for at least 1 hour, with checks made no more than 10 minutes apart. If FV is greater than 9,000 m/hr (500 fpm), the direction of air flow through the NDOs shall be presumed to be inward at all times without verification.

9. Diagrams

BILLING CODE 6560–50–P

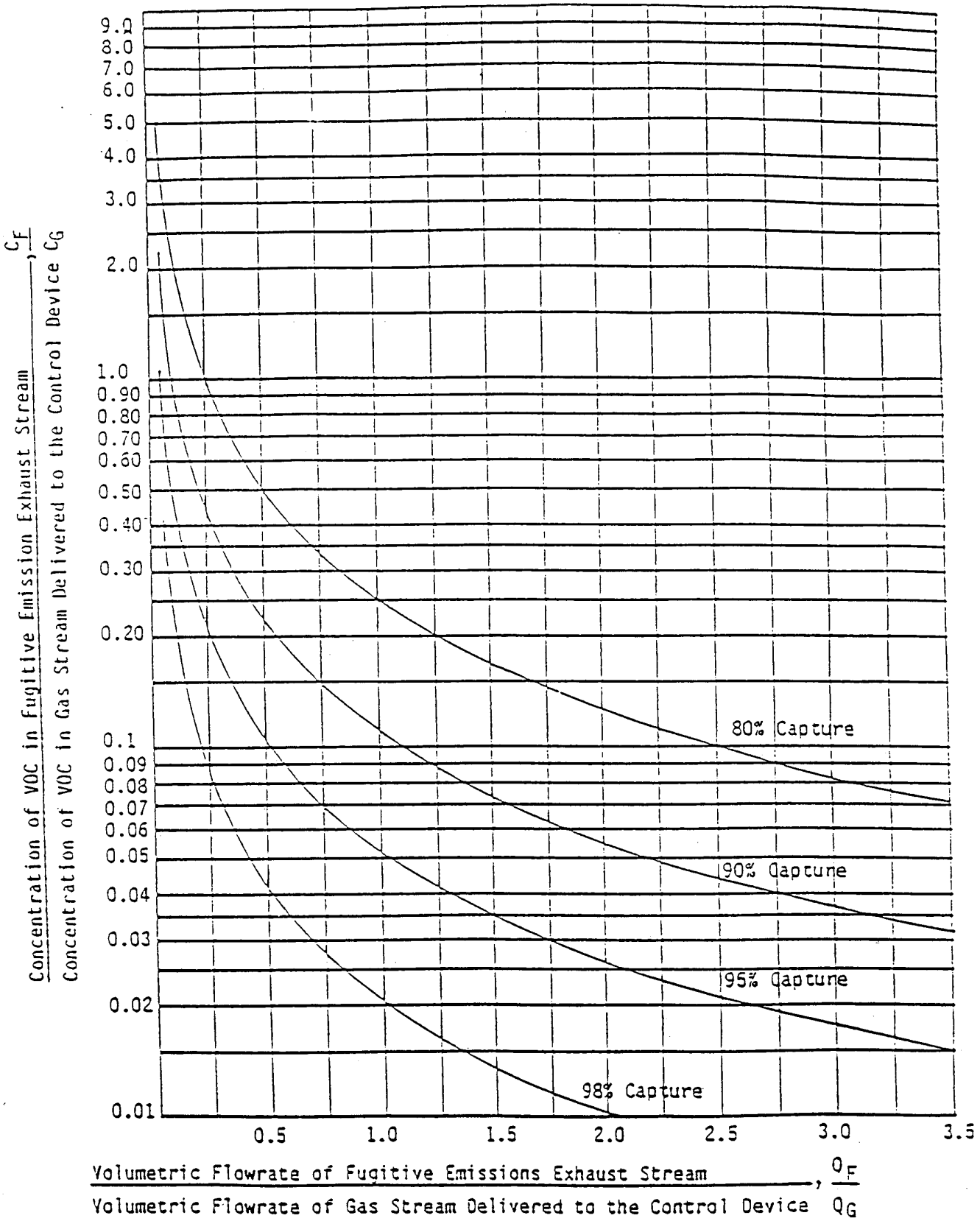

Figure 204-1. The crumpler chart.

BILLING CODE 6560–50–C

Method 204A—Volatile Organic Compounds Content in Liquid Input Stream

1. Scope and Application

1.1 Applicability. This procedure is applicable for determining the input of volatile organic compounds (VOC). It is intended to be used in the development of liquid/gas protocols for determining VOC capture efficiency (CE) for surface coating and printing operations.

1.2 Principle. The amount of VOC introduced to the process (L) is the sum of the products of the weight (W) of each VOC containing liquid (ink, paint, solvent, etc.) used and its VOC content (V).

1.3 Sampling Requirements. A CE test shall consist of at least three sampling runs. Each run shall cover at least one complete production cycle, but shall be at least 3 hours long. The sampling time for each run need not exceed 8 hours, even if the production cycle has not been completed. Alternative sampling times may be used with the approval of the Administrator.

2. Summary of Method

The amount of VOC containing liquid introduced to the process is determined as the weight difference of the feed material before and after each sampling run. The VOC content of the liquid input material is determined by volatilizing a small aliquot of the material and analyzing the volatile material using a flame ionization analyzer (FIA). A sample of each VOC containing liquid is analyzed with an FIA to determine V.

3. Safety

Because this procedure is often applied in highly explosive areas, caution and care should be exercised in choosing, installing, and using the appropriate equipment.

4. Equipment and Supplies

Mention of trade names or company products does not constitute endorsement. All gas concentrations (percent, ppm) are by volume, unless otherwise noted.

4.1 Liquid Weight.

4.1.1 Balances/Digital Scales. To weigh drums of VOC containing liquids to within 0.2 lb or 1.0 percent of the total weight of VOC liquid used.

4.1.2 Volume Measurement Apparatus (Alternative). Volume meters, flow meters, density measurement equipment, etc., as needed to achieve the same accuracy as direct weight measurements.

4.2 VOC Content (FIA Technique). The liquid sample analysis system is shown in Figures 204A–1 and 204A–2. The following equipment is required:

4.2.1 Sample Collection Can. An appropriately-sized metal can to be used to collect VOC containing materials. The can must be constructed in such a way that it can be grounded to the coating container.

4.2.2 Needle Valves. To control gas flow.

4.2.3 Regulators. For carrier gas and calibration gas cylinders.

4.2.4 Tubing. Teflon or stainless steel tubing with diameters and lengths determined by connection requirements of equipment. The tubing between the sample oven outlet and the FIA shall be heated to maintain a temperature of 120±5 °C.

4.2.5 Atmospheric Vent. A tee and 0- to 0.5-liter/min rotameter placed in the sampling line between the carrier gas cylinder and the VOC sample vessel to release the excess carrier gas. A toggle valve placed between the tee and the rotameter facilitates leak tests of the analysis system.

4.2.6 Thermometer. Capable of measuring the temperature of the hot water bath to within 1 °C.

4.2.7 Sample Oven. Heated enclosure, containing calibration gas coil heaters, critical orifice, aspirator, and other liquid sample analysis components, capable of maintaining a temperature of 120±5 °C.

4.2.8 Gas Coil Heaters. Sufficient lengths of stainless steel or Teflon tubing to allow zero and calibration gases to be heated to the sample oven temperature before entering the critical orifice or aspirator.

4.2.9 Water Bath. Capable of heating and maintaining a sample vessel temperature of 100±5 °C.

4.2.10 Analytical Balance. To measure ±0.001 g.

4.2.11 Disposable Syringes. 2-cc or 5-cc.

4.2.12 Sample Vessel. Glass, 40-ml septum vial. A separate vessel is needed for each sample.

4.2.13 Rubber Stopper. Two-hole stopper to accommodate 3.2-mm (⅛-in.) Teflon tubing, appropriately sized to fit the opening of the sample vessel. The rubber stopper should be wrapped in Teflon tape to provide a tighter seal and to prevent any reaction of the sample with the rubber stopper. Alternatively, any leak-free closure fabricated of nonreactive materials and accommodating the necessary tubing fittings may be used.

4.2.14 Critical Orifices. Calibrated critical orifices capable of providing constant flow rates from 50 to 250 ml/min at known pressure drops. Sapphire orifice assemblies (available from O'Keefe Controls Company) and glass capillary tubing have been found to be adequate for this application.

4.2.15 Vacuum Gauge. Zero to 760-mm (0- to 30-in.) Hg U-Tube manometer or vacuum gauge.

4.2.16 Pressure Gauge. Bourdon gauge capable of measuring the maximum air pressure at the aspirator inlet (e.g., 100 psig).

4.2.17 Aspirator. A device capable of generating sufficient vacuum at the sample vessel to create critical flow through the calibrated orifice when sufficient air pressure is present at the aspirator inlet. The aspirator must also provide sufficient sample pressure to operate the FIA. The sample is also mixed with the dilution gas within the aspirator.

4.2.18 Soap Bubble Meter. Of an appropriate size to calibrate the critical orifices in the system.

4.2.19 Organic Concentration Analyzer. An FIA with a span value of 1.5 times the expected concentration as propane; however, other span values may be used if it can be demonstrated that they would provide more accurate measurements. The FIA instrument should be the same instrument used in the gaseous analyses adjusted with the same fuel, combustion air, and sample back-pressure (flow rate) settings. The system shall be capable of meeting or exceeding the following specifications:

4.2.19.1 Zero Drift. Less than ±3.0 percent of the span value.

4.2.19.2 Calibration Drift. Less than ±3.0 percent of the span value.

4.2.19.3 Calibration Error. Less than ±5.0 percent of the calibration gas value.

4.2.20 Integrator/Data Acquisition System. An analog or digital device or computerized data acquisition system used to integrate the FIA response or compute the average response and record measurement data. The minimum data sampling frequency for computing average or integrated values is one measurement value every 5 seconds. The device shall be capable of recording average values at least once per minute.

4.2.21 Chart Recorder (Optional). A chart recorder or similar device is recommended to provide a continuous analog display of the measurement results during the liquid sample analysis.

5. Reagents and Standards

5.1 Calibration and Other Gases. Gases used for calibration, fuel, and combustion air (if required) are contained in compressed gas cylinders. All calibration gases shall be traceable to National Institute of Standards and Technology standards and shall be

certified by the manufacturer to ±1 percent of the tag value. Additionally, the manufacturer of the cylinder should provide a recommended shelf life for each calibration gas cylinder over which the concentration does not change more than ±2 percent from the certified value. For calibration gas values not generally available, dilution systems calibrated using Method 205 may be used. Alternative methods for preparing calibration gas mixtures may be used with the approval of the Administrator.

5.1.1 Fuel. The FIA manufacturer's recommended fuel should be used. A 40 percent H2/60 percent He or 40 percent H_2/60 percent N_2 gas mixture is recommended to avoid an oxygen synergism effect that reportedly occurs when oxygen concentration varies significantly from a mean value. Other mixtures may be used provided the tester can demonstrate to the Administrator that there is no oxygen synergism effect.

5.1.2 Carrier Gas. High purity air with less than 1 ppm of organic material (as propane) or less than 0.1 percent of the span value, whichever is greater.

5.1.3 FIA Linearity Calibration Gases. Low-, mid-, and high-range gas mixture standards with nominal propane concentrations of 20–30, 45–55, and 70–80 percent of the span value in air, respectively. Other calibration values and other span values may be used if it can be shown to the Administrator's satisfaction that equally accurate measurements would be achieved.

5.1.4 System Calibration Gas. Gas mixture standard containing propane in air, approximating the undiluted VOC concentration expected for the liquid samples.

6. Sample Collection, Preservation and Storage

6.1 Samples must be collected in a manner that prevents or minimizes loss of volatile components and that does not contaminate the coating reservoir.

6.2 Collect a 100-ml or larger sample of the VOC containing liquid mixture at each application location at the beginning and end of each test run. A separate sample should be taken of each VOC containing liquid added to the application mixture during the test run. If a fresh drum is needed during the sampling run, then obtain a sample from the fresh drum.

6.3 When collecting the sample, ground the sample container to the coating drum. Fill the sample container as close to the rim as possible to minimize the amount of headspace.

6.4 After the sample is collected, seal the container so the sample cannot leak out or evaporate.

6.5 Label the container to clearly identify the contents.

7. Quality Control

7.1 Required instrument quality control parameters are found in the following sections:

7.1.1 The FIA system must be calibrated as specified in section 8.1.

7.1.2 The system drift check must be performed as specified in section 8.2.

7.2 Audits.

7.2.1 Audit Procedure. Concurrently, analyze the audit sample and a set of compliance samples in the same manner to evaluate the technique of the analyst and the standards preparation. The same analyst, analytical reagents, and analytical system shall be used both for compliance samples and the EPA audit sample. If this condition is met, auditing of subsequent compliance analyses for the same enforcement agency within 30 days is not required. An audit sample set may not be used to validate different sets of compliance samples under the jurisdiction of different enforcement agencies, unless prior arrangements are made with both enforcement agencies.

7.2.2 Audit Samples and Audit Sample Availability. Audit samples will be supplied only to enforcement agencies for compliance tests. The availability of audit samples may be obtained by writing: Source Test Audit Coordinator (STAC) (MD–77B), Quality Assurance Division, Atmospheric Research and Exposure Assessment Laboratory, U.S. Environmental Protection Agency, Research Triangle Park, NC 27711 or by calling the STAC at (919) 541–7834. The request for the audit sample must be made at least 30 days prior to the scheduled compliance sample analysis.

7.2.3 Audit Results. Calculate the audit sample concentration according to the calculation procedure described in the audit instructions included with the audit sample. Fill in the audit sample concentration and the analyst's name on the audit response form included with the audit instructions. Send one copy to the EPA Regional Office or the appropriate enforcement agency, and a second copy to the STAC. The EPA Regional Office or the appropriate enforcement agency will report the results of the audit to the laboratory being audited. Include this response with the results of the compliance samples in relevant reports to the EPA Regional Office or the appropriate enforcement agency.

8. Calibration and Standardization

8.1 FIA Calibration and Linearity Check. Make necessary adjustments to the air and fuel supplies for the FIA and ignite the burner. Allow the FIA to warm up for the period recommended by the manufacturer. Inject a calibration gas into the measurement system and adjust the back-pressure regulator to the value required to achieve the flow rates specified by the manufacturer. Inject the zero- and the high-range calibration gases and adjust the analyzer calibration to provide the proper responses. Inject the low- and mid-range gases and record the responses of the measurement system. The calibration and linearity of the system are acceptable if the responses for all four gases are within 5 percent of the respective gas values. If the performance of the system is not acceptable, repair or adjust the system and repeat the linearity check. Conduct a calibration and linearity check after assembling the analysis system and after a major change is made to the system.

8.2 Systems Drift Checks. After each sample, repeat the system calibration checks in section 9.2.7 before any adjustments to the FIA or measurement system are made. If the zero or calibration drift exceeds ±3 percent of the span value, discard the result and repeat the analysis.

Alternatively, recalibrate the FIA as in section 8.1 and report the results using both sets of calibration data (i.e., data determined prior to the test period and data determined following the test period). The data that results in the lowest CE value shall be reported as the results for the test run.

8.3 Critical Orifice Calibration.

8.3.1 Each critical orifice must be calibrated at the specific operating conditions under which it will be used. Therefore, assemble all components of the liquid sample analysis system as shown in Figure 204A–3. A stopwatch is also required.

8.3.2 Turn on the sample oven, sample line, and water bath heaters, and allow the system to reach the proper operating temperature. Adjust the aspirator to a vacuum of 380 mm (15 in.) Hg vacuum. Measure the time required for one soap bubble to move a known distance and record barometric pressure.

8.3.3 Repeat the calibration procedure at a vacuum of 406 mm (16 in.) Hg and at 25-mm (1-in.) Hg intervals until three consecutive determinations provide the same flow rate. Calculate the critical flow rate for the orifice in ml/min at standard conditions. Record the vacuum necessary to achieve critical flow.

9. Procedure

9.1 Determination of Liquid Input Weight.

9.1.1 Weight Difference. Determine the amount of material introduced to the process as the weight difference of the feed material before and after each sampling run. In determining the total VOC containing liquid usage, account for:

(a) The initial (beginning) VOC containing liquid mixture.

(b) Any solvent added during the test run.

(c) Any coating added during the test run.

(d) Any residual VOC containing liquid mixture remaining at the end of the sample run.

9.1.1.1 Identify all points where VOC containing liquids are introduced to the process. To obtain an accurate measurement of VOC containing liquids, start with an empty fountain (if applicable). After completing the run, drain the liquid in the fountain back into the liquid drum (if possible) and weigh the drum again. Weigh the VOC containing liquids to ±0.5 percent of the total weight (full) or ±1.0 percent of the total weight of VOC containing liquid used during the sample run, whichever is less. If the residual liquid cannot be returned to the drum, drain the fountain into a preweighed empty drum to determine the final weight of the liquid.

9.1.1.2 If it is not possible to measure a single representative mixture, then weigh the various components separately (e.g., if solvent is added during the sampling run, weigh the solvent before it is added to the mixture). If a fresh drum of VOC containing liquid is needed during the run, then weigh both the empty drum and fresh drum.

9.1.2 Volume Measurement (Alternative). If direct weight measurements are not feasible, the tester may use volume meters or flow rate meters and density measurements to determine the weight of liquids used if it can be demonstrated that the technique produces results equivalent to the direct weight measurements. If a single representative mixture cannot be measured, measure the components separately.

9.2 Determination of VOC Content in Input Liquids

9.2.1 Assemble the liquid VOC content analysis system as shown in Figure 204A–1.

9.2.2 Permanently identify all of the critical orifices that may be used. Calibrate each critical orifice under the expected operating conditions (i.e., sample vacuum and temperature) against a volume meter as described in section 8.3.

9.2.3 Label and tare the sample vessels (including the stoppers and caps) and the syringes.

9.2.4 Install an empty sample vessel and perform a leak test of the system. Close the carrier gas valve and atmospheric vent and evacuate the sample vessel to 250 mm (10 in.) Hg absolute or less using the aspirator. Close the toggle valve at the inlet to the aspirator and observe the vacuum for at least 1 minute. If there is any change in the sample pressure, release the vacuum, adjust or repair the apparatus as necessary, and repeat the leak test.

9.2.5 Perform the analyzer calibration and linearity checks according to the procedure in section 5.1. Record the responses to each of the calibration gases and the back-pressure setting of the FIA.

9.2.6 Establish the appropriate dilution ratio by adjusting the aspirator air supply or substituting critical orifices. Operate the aspirator at a vacuum of at least 25 mm (1 in.) Hg greater than the vacuum necessary to achieve critical flow. Select the dilution ratio so that the maximum response of the FIA to the sample does not exceed the high-range calibration gas.

9.2.7 Perform system calibration checks at two levels by introducing compressed gases at the inlet to the sample vessel while the aspirator and dilution devices are operating. Perform these checks using the carrier gas (zero concentration) and the system calibration gas. If the response to the carrier gas exceeds ±0.5 percent of span, clean or repair the apparatus and repeat the check. Adjust the dilution ratio as necessary to achieve the correct response to the upscale check, but do not adjust the analyzer calibration. Record the identification of the orifice, aspirator air supply pressure, FIA back-pressure, and the responses of the FIA to the carrier and system calibration gases.

9.2.8 After completing the above checks, inject the system calibration gas for approximately 10 minutes. Time the exact duration of the gas injection using a stopwatch. Determine the area under the FIA response curve and calculate the system response factor based on the sample gas flow rate, gas concentration, and the duration of the injection as compared to the integrated response using Equations 204A–2 and 204A–3.

9.2.9 Verify that the sample oven and sample line temperatures are 120± 5°C and that the water bath temperature is 100± 5°C.

9.2.10 Fill a tared syringe with approximately 1 g of the VOC containing liquid and weigh it. Transfer the liquid to a tared sample vessel. Plug the sample vessel to minimize sample loss. Weigh the sample vessel containing the liquid to determine the amount of sample actually received. Also, as a quality control check, weigh the empty syringe to determine the amount of material delivered. The two coating sample weights should agree within 0.02 g. If not, repeat the procedure until an acceptable sample is obtained.

9.2.11 Connect the vessel to the analysis system. Adjust the aspirator supply pressure to the correct value. Open the valve on the carrier gas supply to the sample vessel and adjust it to provide a slight excess flow to the atmospheric vent. As soon as the initial response of the FIA begins to decrease, immerse the sample vessel in the water bath. (Applying heat to the sample vessel too soon may cause the FIA response to exceed the calibrated range of the instrument and, thus, invalidate the analysis.)

9.2.12 Continuously measure and record the response of the FIA until all of the volatile material has been evaporated from the sample and the instrument response has returned to the baseline (i.e., response less than 0.5 percent of the span value). Observe the aspirator supply pressure, FIA back-pressure, atmospheric vent, and other system operating parameters during the run; repeat the analysis procedure if any of these parameters deviate from the values established during the system calibration checks in section 9.2.7. After each sample, perform the drift check described in section 8.2. If the drift check results are acceptable, calculate the VOC content of the sample using the equations in section 11.2. Alternatively, recalibrate the FIA as in section 8.1 and report the results using both sets of calibration data (i.e., data determined prior to the test period and data determined following the test period). The data that results in the lowest CE value shall be reported as the results for the test run. Integrate the area under the FIA response curve, or determine the average concentration response and the duration of sample analysis.

10. Data Analysis and Calculations

10.1 Nomenclature.

A_L=area under the response curve of the liquid sample, area count.

A_S=area under the response curve of the calibration gas, area count.

C_S=actual concentration of system calibration gas, ppm propane.

$K=1.830 \times 10^{-9}$ g/(ml-ppm).

L=total VOC content of liquid input, kg.

M_L=mass of liquid sample delivered to the sample vessel, g.
q = flow rate through critical orifice, ml/min.
RF=liquid analysis system response factor, g/area count.
θ_S=total gas injection time for system calibration gas during integrator calibration, min.
V_{Fj}=final VOC fraction of VOC containing liquid j.
V_{Ij}=initial VOC fraction of VOC containing liquid j.
V_{Aj}=VOC fraction of VOC containing liquid j added during the run.
V=VOC fraction of liquid sample.
W_{Fj}=weight of VOC containing liquid j remaining at end of the run, kg.
W_{Ij}=weight of VOC containing liquid j at beginning of the run, kg.
W_{Aj}=weight of VOC containing liquid j added during the run, kg.

10.2 Calculations

10.2.1 Total VOC Content of the Input VOC Containing Liquid.

$$L = \sum_{j=1}^{n} V_{rj} W_{rj} - \sum_{j=1}^{n} V_{Fj} W_{Fj} + \sum_{j=1}^{n} V_{Aj} W_{Aj} \qquad \text{Eq. 204A-1}$$

10.2.2 Liquid Sample Analysis System Response Factor for Systems Using Integrators, Grams/Area Count.

$$RF = \frac{C_S q \theta_S K}{A_S} \qquad \text{Eq. 204A-2}$$

10.2.3 VOC Content of the Liquid Sample.

$$V = \frac{A_L RF}{M_L} \qquad \text{Eq. 204A-3}$$

11. Method Performance

The measurement uncertainties are estimated for each VOC containing liquid as follows: W = ±2.0 percent and V = ±4.0 percent. Based on these numbers, the probable uncertainty for L is estimated at about ±4.5 percent for each VOC containing liquid.

12. Diagrams

BILLING CODE 6560–50–P

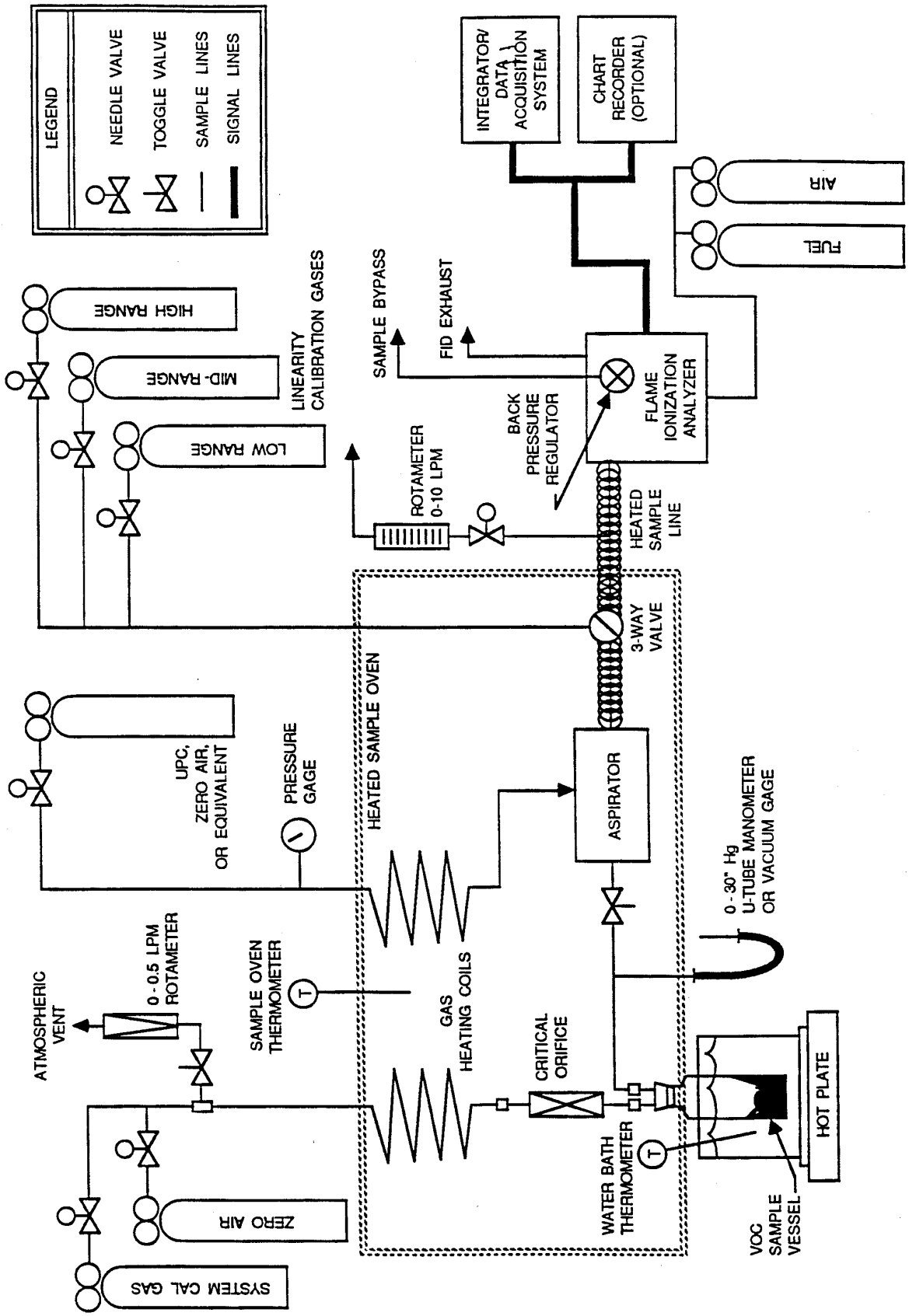

Figure 204A-1. Liquid analysis sample system.

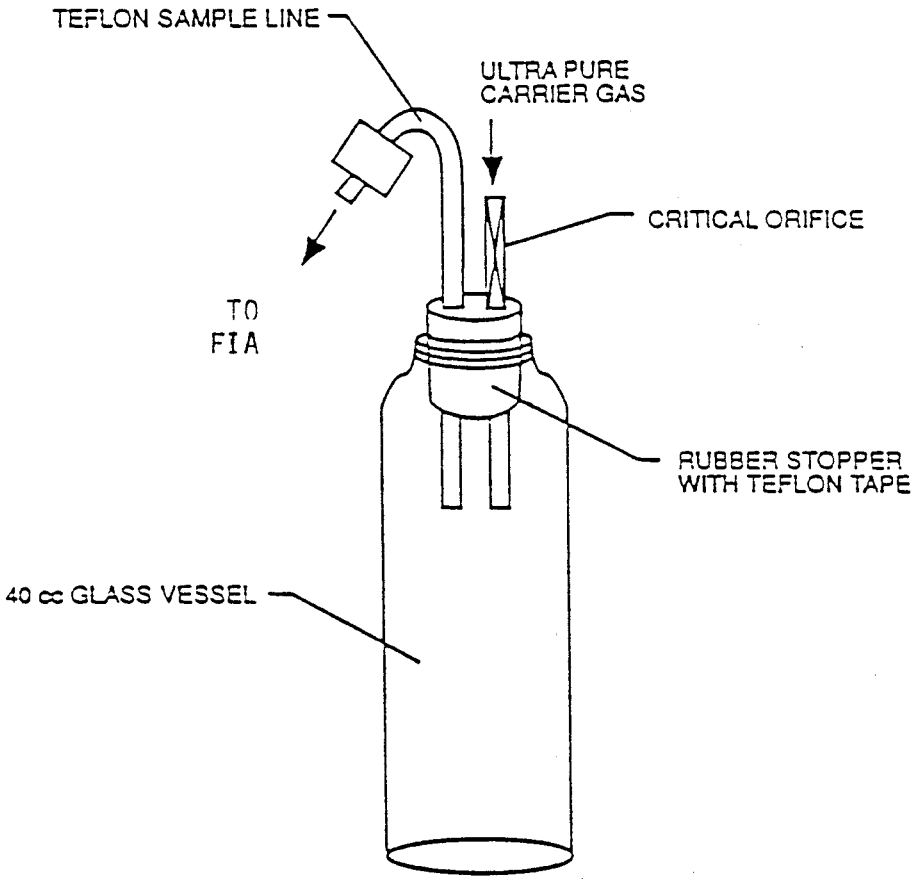

Figure 204A-2. VOC sampling vessel.

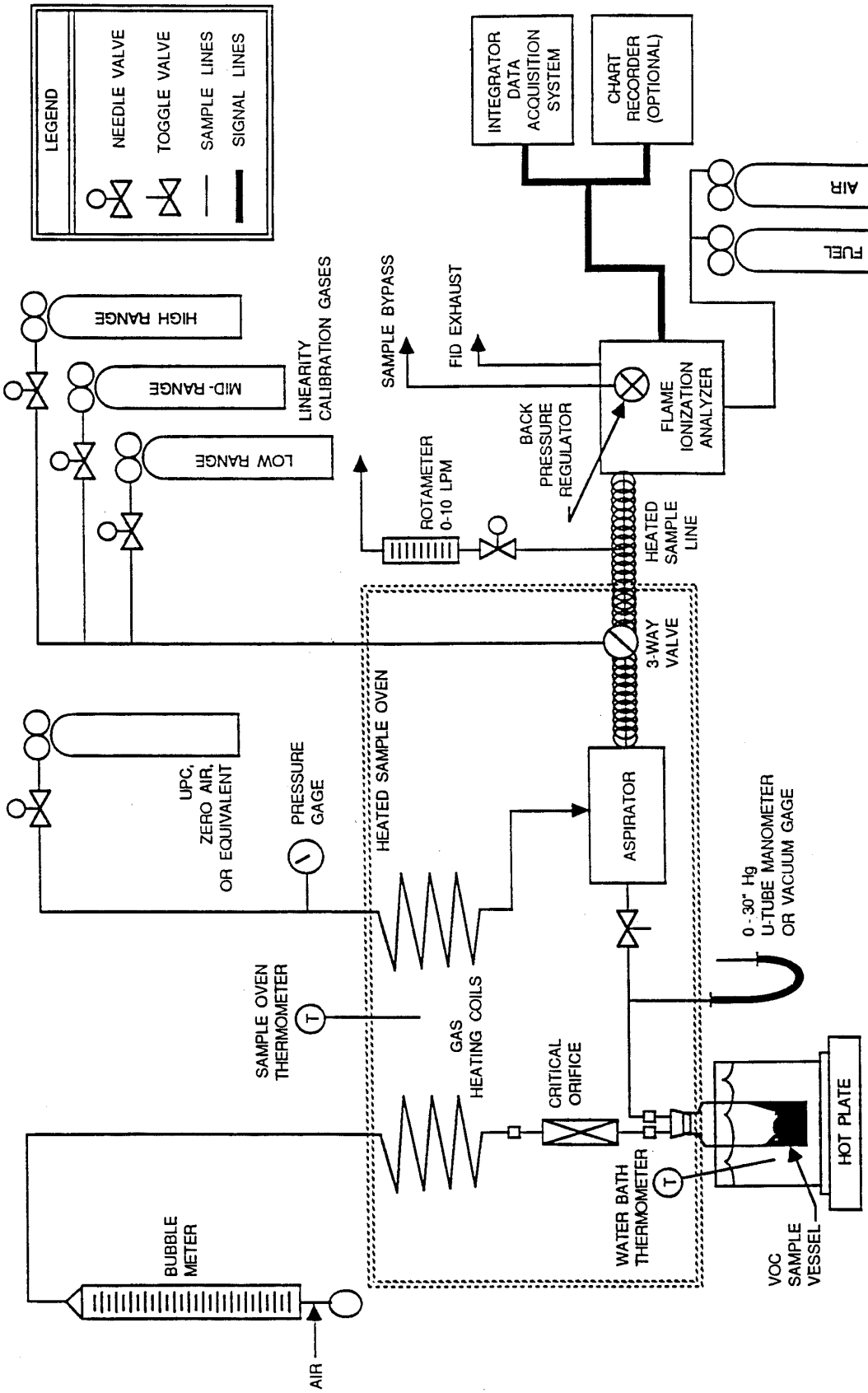

Figure 204A-3. Critical orifice calibration apparatus.

BILLING CODE 6560–50–C

Method 204B—Volatile Organic Compounds Emissions in Captured Stream

1. Scope and Application

1.1 Applicability. This procedure is applicable for determining the volatile organic compounds (VOC) content of captured gas streams. It is intended to be used in the development of a gas/gas protocol for determining VOC capture efficiency (CE) for surface coating and printing operations. The procedure may not be acceptable in certain site-specific situations [e.g., when: (1) direct-fired heaters or other circumstances affect the quantity of VOC at the control device inlet; and (2) particulate organic aerosols are formed in the process and are present in the captured emissions].

1.2 Principle. The amount of VOC captured (G) is calculated as the sum of the products of the VOC content (C_{Gj}), the flow rate (Q_{Gj}), and the sample time (Θ_C) from each captured emissions point.

1.3 Sampling Requirements. A CE test shall consist of at least three sampling runs. Each run shall cover at least one complete production cycle, but shall be at least 3 hours long. The sampling time for each run need not exceed 8 hours, even if the production cycle has not been completed. Alternative sampling times may be used with the approval of the Administrator.

2. Summary of Method

A gas sample is extracted from the source though a heated sample line and, if necessary, a glass fiber filter to a flame ionization analyzer (FIA).

3. Safety

Because this procedure is often applied in highly explosive areas, caution and care should be exercised in choosing, installing, and using the appropriate equipment.

4. Equipment and Supplies

Mention of trade names or company products does not constitute endorsement. All gas concentrations (percent, ppm) are by volume, unless otherwise noted.

4.1 Gas VOC Concentration. A schematic of the measurement system is shown in Figure 204B–1. The main components are as follows:

4.1.1 Sample Probe. Stainless steel or equivalent. The probe shall be heated to prevent VOC condensation.

4.1.2 Calibration Valve Assembly. Three-way valve assembly at the outlet of the sample probe to direct the zero and calibration gases to the analyzer. Other methods, such as quick-connect lines, to route calibration gases to the outlet of the sample probe are acceptable.

4.1.3 Sample Line. Stainless steel or Teflon tubing to transport the sample gas to the analyzer. The sample line must be heated to prevent condensation.

4.1.4 Sample Pump. A leak-free pump, to pull the sample gas through the system at a flow rate sufficient to minimize the response time of the measurement system. The components of the pump that contact the gas stream shall be constructed of stainless steel or Teflon. The sample pump must be heated to prevent condensation.

4.1.5 Sample Flow Rate Control. A sample flow rate control valve and rotameter, or equivalent, to maintain a constant sampling rate within 10 percent. The flow rate control valve and rotameter must be heated to prevent condensation. A control valve may also be located on the sample pump bypass loop to assist in controlling the sample pressure and flow rate.

4.1.6 Organic Concentration Analyzer. An FIA with a span value of 1.5 times the expected concentration as propane; however, other span values may be used if it can be demonstrated to the Administrator's satisfaction that they would provide equally accurate measurements. The system shall be capable of meeting or exceeding the following specifications:

4.1.6.1 Zero Drift. Less than ±3.0 percent of the span value.

4.1.6.2 Calibration Drift. Less than ±3.0 percent of the span value.

4.1.6.3 Calibration Error. Less than ±5.0 percent of the calibration gas value.

4.1.6.4 Response Time. Less than 30 seconds.

4.1.7 Integrator/Data Acquisition System. An analog or digital device, or computerized data acquisition system used to integrate the FIA response or compute the average response and record measurement data. The minimum data sampling frequency for computing average or integrated values is one measurement value every 5 seconds. The device shall be capable of recording average values at least once per minute.

4.2 Captured Emissions Volumetric Flow Rate.

4.2.1 Method 2 or 2A Apparatus. For determining volumetric flow rate.

4.2.2 Method 3 Apparatus and Reagents. For determining molecular weight of the gas stream. An estimate of the molecular weight of the gas stream may be used if approved by the Administrator.

4.2.3 Method 4 Apparatus and Reagents. For determining moisture content, if necessary.

5. Reagents and Standards

5.1 Calibration and Other Gases. Gases used for calibration, fuel, and combustion air (if required) are contained in compressed gas cylinders. All calibration gases shall be traceable to National Institute of Standards and Technology standards and shall be certified by the manufacturer to ±1 percent of the tag value. Additionally, the manufacturer of the cylinder should provide a recommended shelf life for each calibration gas cylinder over which the concentration does not change more than ±2 percent from the certified value. For calibration gas values not generally available, dilution systems calibrated using Method 205 may be used. Alternative methods for preparing calibration gas mixtures may be used with the approval of the Administrator.

5.1.1 Fuel. The FIA manufacturer's recommended fuel should be used. A 40 percent H_2/60 percent He or 40 percent H_2/60 percent N_2 gas mixture is recommended to avoid an oxygen synergism effect that reportedly occurs when oxygen concentration varies significantly from a mean value. Other mixtures may be used provided the tester can demonstrate to the Administrator that there is no oxygen synergism effect.

5.1.2 Carrier Gas. High purity air with less than 1 ppm of organic material (as propane or carbon equivalent) or less than 0.1 percent of the span value, whichever is greater.

5.1.3 FIA Linearity Calibration Gases. Low-, mid-, and high-range gas mixture standards with nominal propane concentrations of 20–30, 45–55, and 70–80 percent of the span value in air, respectively. Other calibration values and other span values may be used if it can be shown to the Administrator's satisfaction that equally accurate measurements would be achieved.

5.2 Particulate Filter. An in-stack or an out-of-stack glass fiber filter is recommended if exhaust gas particulate loading is significant. An out-of-stack filter must be heated to prevent any condensation unless it can be demonstrated that no condensation occurs.

6. Quality Control

6.1 Required instrument quality control parameters are found in the following sections:

6.1.1 The FIA system must be calibrated as specified in section 7.1.

6.1.2 The system drift check must be performed as specified in section 7.2.

6.1.3 The system check must be conducted as specified in section 7.3.

6.2 Audits.

6.2.1 Analysis Audit Procedure. Immediately before each test, analyze an audit cylinder as described in section 7.2. The analysis audit must agree with the audit cylinder concentration within 10 percent.

6.2.2 Audit Samples and Audit Sample Availability. Audit samples will be supplied only to enforcement agencies for compliance tests. The availability of audit samples may be obtained by writing: Source Test Audit Coordinator (STAC) (MD–77B), Quality Assurance Division, Atmospheric Research and Exposure Assessment Labortory, U.S. Environmental Protection Agency, Research Triangle Park, NC 27711 or by calling the STAC at (919) 541–7834. The request for the audit sample must be made at least 30 days prior to the scheduled compliance sample analysis.

6.2.3 Audit Results. Calculate the audit sample concentration according to the calculation procedure described in the audit instructions included with the audit sample. Fill in the audit sample concentration and the analyst's name on the audit response form included with the audit instructions. Send one copy to the EPA Regional Office or the appropriate enforcement agency, and a second copy to the STAC. The EPA Regional Office or the appropriate enforcement agency will report the results of the audit to the laboratory being audited. Include this response with the results of the compliance samples in relevant reports to the EPA Regional Office or the appropriate enforcement agency.

7. Calibration and Standardization

7.1 FIA Calibration and Linearity Check. Make necessary adjustments to the air and fuel supplies for the FIA and ignite the burner. Allow the FIA to warm up for the period recommended by the manufacturer. Inject a calibration gas into the measurement system and adjust the back-pressure regulator to the value required to achieve the flow rates specified by the manufacturer. Inject the zero-and the high-range calibration gases and adjust the analyzer calibration to provide the proper responses. Inject the low- and mid-range gases and record the responses of the measurement system. The calibration and linearity of the system are acceptable if the responses for all four gases are within 5 percent of the respective gas values. If the performance of the system is not acceptable, repair or adjust the system and repeat the linearity check. Conduct a calibration and linearity check after assembling the analysis system and after a major change is made to the system.

7.2 Systems Drift Checks. Select the calibration gas that most closely approximates the concentration of the captured emissions for conducting the drift checks. Introduce the zero and calibration gases at the calibration valve assembly and verify that the appropriate gas flow rate and pressure are present at the FIA. Record the measurement system responses to the zero and calibration gases. The performance of the system is acceptable if the difference between the drift check measurement and the value obtained in section 7.1 is less than 3 percent of the span value. Alternatively, recalibrate the FIA as in section 7.1 and report the results using both sets of calibration data (i.e., data determined prior to the test period and data determined following the test period). The data that results in the lowest CE value shall be reported as the results for the test run. Conduct the system drift checks at the end of each run.

7.3 System Check. Inject the high-range calibration gas at the inlet of the sampling probe and record the response. The performance of the system is acceptable if the measurement system response is within 5 percent of the value obtained in section 7.1 for the high-range calibration gas. Conduct a system check before and after each test run.

8. Procedure

8.1. Determination of Volumetric Flow Rate of Captured Emissions.

8.1.1 Locate all points where emissions are captured from the affected facility. Using Method 1, determine the sampling points. Be sure to check each site for cyclonic or swirling flow.

8.1.2 Measure the velocity at each sampling site at least once every hour during each sampling run using Method 2 or 2A.

8.2 Determination of VOC Content of Captured Emissions.

8.2.1 Analysis Duration. Measure the VOC responses at each captured emissions point during the entire test run or, if applicable, while the process is operating. If there are multiple captured emission locations, design a sampling system to allow a single FIA to be used to determine the VOC responses at all sampling locations.

8.2.2 Gas VOC Concentration.

8.2.2.1 Assemble the sample train as shown in Figure 204B–1. Calibrate the FIA according to the procedure in section 7.1.

8.2.2.2 Conduct a system check according to the procedure in section 7.3.

8.2.2.3 Install the sample probe so that the probe is centrally located in the stack, pipe, or duct, and is sealed tightly at the stack port connection.

8.2.2.4 Inject zero gas at the calibration valve assembly. Allow the measurement system response to reach zero. Measure the system response time as the time required for the system to reach the effluent concentration after the calibration valve has been returned to the effluent sampling position.

8.2.2.5 Conduct a system check before, and a system drift check after, each sampling run according to the procedures in sections 7.2 and 7.3. If the drift check following a run indicates unacceptable performance (see section 7.3), the run is not valid. Alternatively, recalibrate the FIA as in section 7.1 and report the results using both sets of calibration data (i.e., data determined prior to the test period and data determined following the test period). The data that results in the lowest CE value shall be reported as the results for the test run. The tester may elect to perform system drift checks during the run not to exceed one drift check per hour.

8.2.2.6 Verify that the sample lines, filter, and pump temperatures are 120±5 °C.

8.2.2.7 Begin sampling at the start of the test period and continue to sample during the entire run. Record the starting and ending times and any required process information as appropriate. If multiple captured emission locations are sampled using a single FIA, sample at each location for the same amount of time (e.g., 2 minutes) and continue to switch from one location to another for the entire test run. Be sure that total sampling time at each location is the same at the end of the test run. Collect at least four separate measurements from each sample point during each hour of testing. Disregard the measurements at each sampling location until two times the response time of the measurement system has elapsed. Continue sampling for at least 1 minute and record the concentration measurements.

8.2.3 Background Concentration.

Note: Not applicable when the building is used as the temporary total enclosure (TTE).

8.2.3.1 Locate all natural draft openings (NDO's) of the TTE. A sampling point shall be at the center of each NDO, unless otherwise specified by the Administrator. If there are more than six NDO's, choose six sampling points evenly spaced among the NDO's.

8.2.3.2 Assemble the sample train as shown in Figure 204B–2. Calibrate the FIA and conduct a system check according to the procedures in sections 7.1 and 7.3.

Note: This sample train shall be separate from the sample train used to measure the captured emissions.

8.2.3.3 Position the probe at the sampling location.

8.2.3.4 Determine the response time, conduct the system check, and sample according to the procedures described in sections 8.2.2.4 through 8.2.2.7.

8.2.4 Alternative Procedure. The direct interface sampling and analysis procedure described in section 7.2 of Method 18 may be used to determine the gas VOC concentration. The system must be designed to collect and analyze at least one sample every 10 minutes. If the alternative procedure is used to determine the VOC concentration of the captured emissions, it must also be used to determine the VOC concentration of the uncaptured emissions.

9. Data Analysis and Calculations

9.1 Nomenclature.

A_i=area of NDO i, ft^2.

A_N=total area of all NDO's in the enclosure, ft^2.

C_{Bi}=corrected average VOC concentration of background emissions at point i, ppm propane.

C_B=average background concentration, ppm propane.

C_{Gj}=corrected average VOC concentration of captured emissions at point j, ppm propane.

C_{DH}=average measured concentration for the drift check calibration gas, ppm propane.

C_{DO}=average system drift check concentration for zero concentration gas, ppm propane.

C_H=actual concentration of the drift check calibration gas, ppm propane.

C_i=uncorrected average background VOC concentration measured at point i, ppm propane.

C_j=uncorrected average VOC concentration measured at point j, ppm propane.

G=total VOC content of captured emissions, kg.

$K_1=1.830\times10^{-6}$ kg/(m^3-ppm).

n=number of measurement points.

Q_{Gj}=average effluent volumetric flow rate corrected to standard conditions at captured emissions point j, m^3/min.

Θ_C=total duration of captured emissions.

9.2 Calculations.

9.2.1 Total VOC Captured Emissions.

$$G = \sum_{j=1}^{n} \left(C_{Gj} - C_B\right) Q_{Gj} \theta_C K_1 \quad \text{Eq. 204B-1}$$

9.2.2 VOC Concentration of the Captured Emissions at Point j.

$$C_{Gj} = \left(C_j - C_{DO}\right) \frac{C_H}{C_{DH} - C_{DO}} \quad \text{Eq. 204B-2}$$

9.2.3 Background VOC Concentration at Point i.

$$C_{Bi} = \left(C_i - C_{DO}\right) \frac{C_H}{C_{DH} - C_{DO}} \quad \text{Eq. 204B-3}$$

9.2.4 Average Background Concentration.

$$C_B = \frac{\sum_{i=1}^{n} C_{Bi} A_i}{A_N} \quad \text{Eq. 204B-4}$$

Note: If the concentration at each point is within 20 percent of the average concentration of all points, then use the arithmetic average.

10. Method Performance

The measurement uncertainties are estimated for each captured or uncaptured emissions point as follows: Q_{Gj}=±5.5 percent and C_{Gj}=±5.0 percent. Based on these numbers, the probable uncertainty for G is estimated at about ±7.4 percent.

11. Diagrams

BILLING CODE 6560–50–P

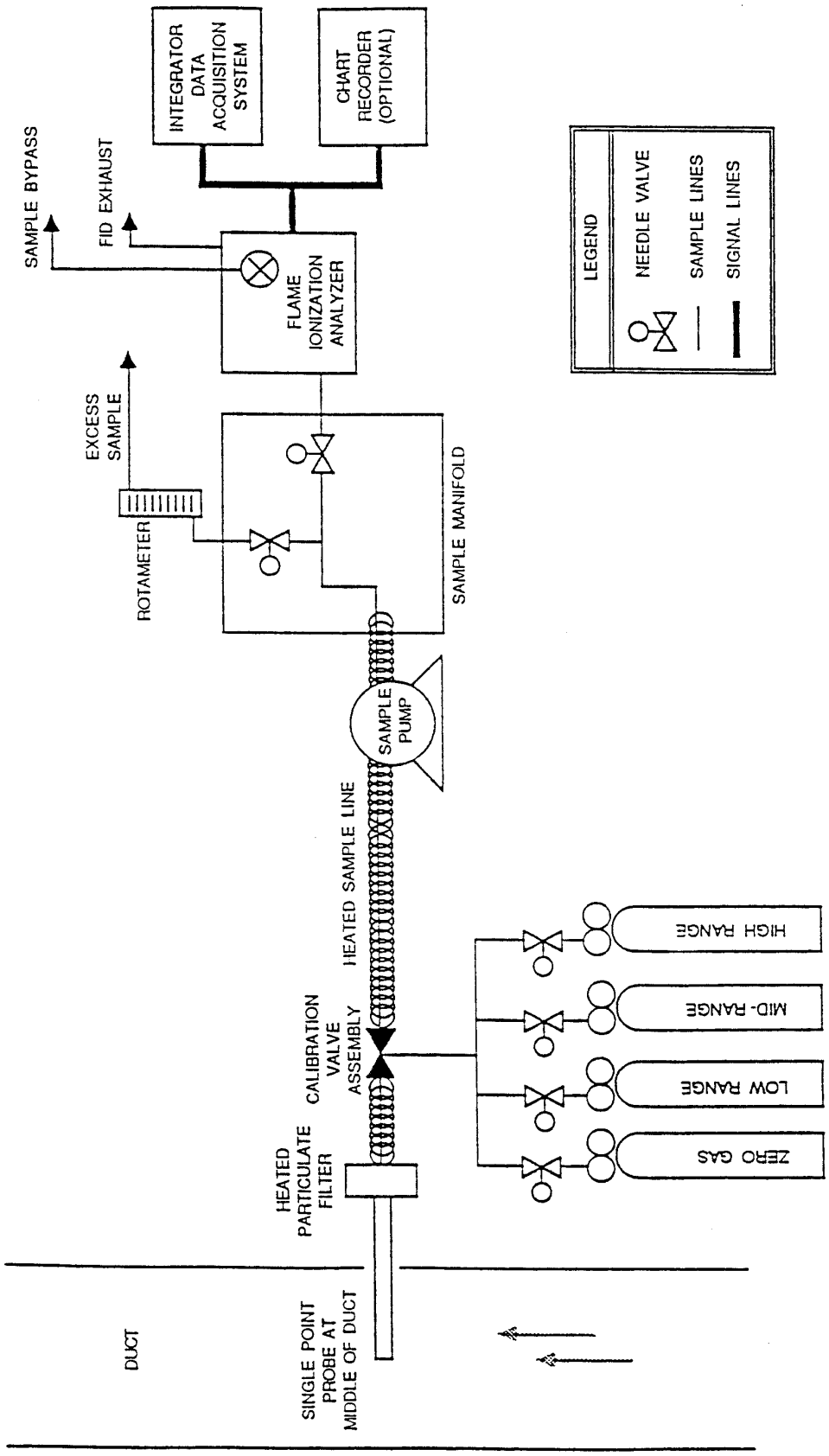

Figure 204B-1. Gas VOC concentration measurement system.

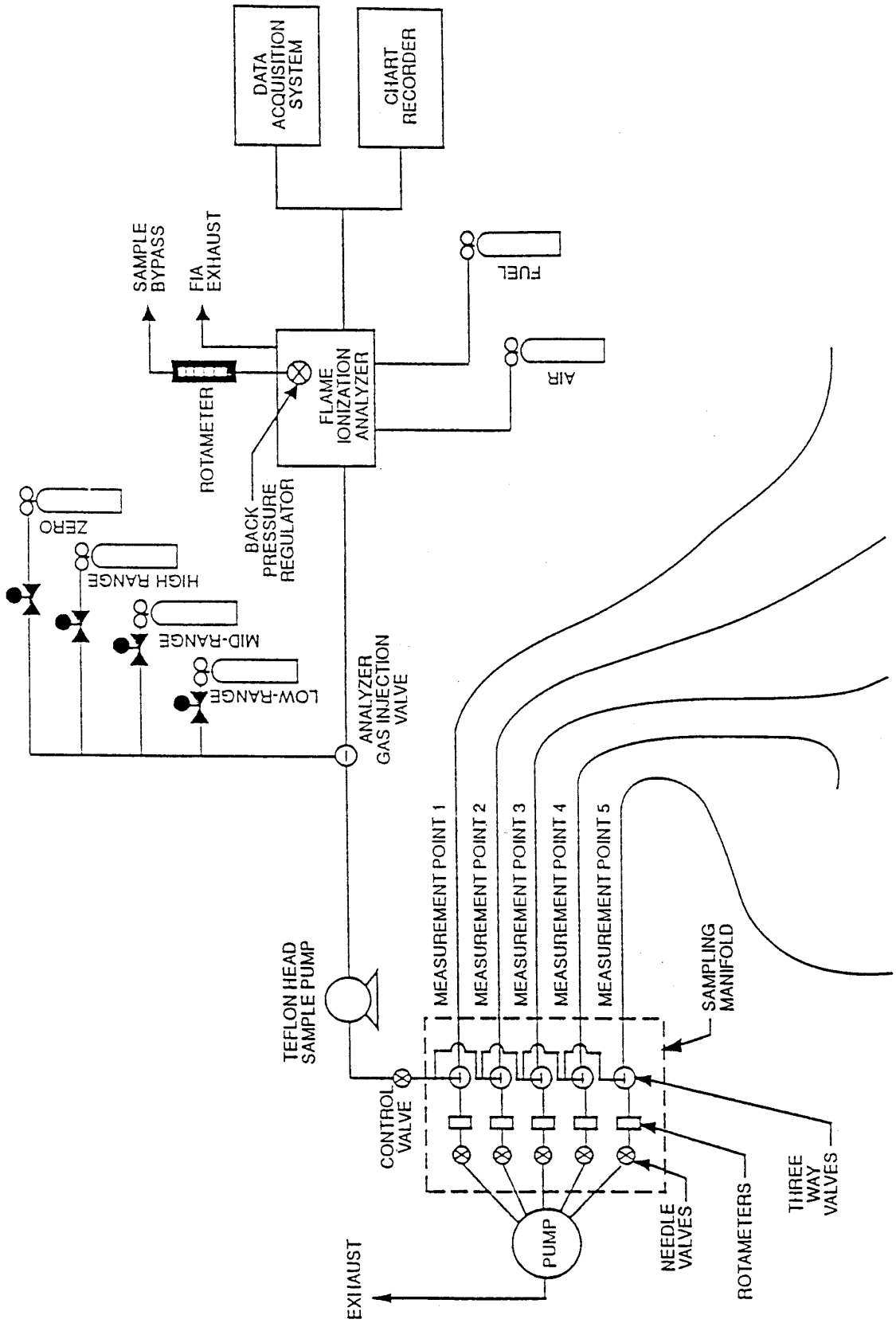

Figure 204B-2. Background measurement system.

BILLING CODE 6560–50–C

Method 204C—Volatile Organic Compounds Emissions in Captured Stream (Dilution Technique)

1. Scope and Application

1.1 Applicability. This procedure is applicable for determining the volatile organic compounds (VOC) content of captured gas streams. It is intended to be used in the development of a gas/gas protocol in which uncaptured emissions are also measured for determining VOC capture efficiency (CE) for surface coating and printing operations. A dilution system is used to reduce the VOC concentration of the captured emissions to about the same concentration as the uncaptured emissions. The procedure may not be acceptable in certain site-specific situations [e.g., when: (1) direct-fired heaters or other circumstances affect the quantity of VOC at the control device inlet; and (2) particulate organic aerosols are formed in the process and are present in the captured emissions].

1.2 Principle. The amount of VOC captured (G) is calculated as the sum of the products of the VOC content (C_{Gj}), the flow rate (Q_{Gj}), and the sampling time (Θ_C) from each captured emissions point.

1.3 Sampling Requirements. A CE test shall consist of at least three sampling runs. Each run shall cover at least one complete production cycle, but shall be at least 3 hours long. The sampling time for each run need not exceed 8 hours, even if the production cycle has not been completed. Alternative sampling times may be used with the approval of the Administrator.

2. Summary of Method

A gas sample is extracted from the source using an in-stack dilution probe through a heated sample line and, if necessary, a glass fiber filter to a flame ionization analyzer (FIA). The sample train contains a sample gas manifold which allows multiple points to be sampled using a single FIA.

3. Safety

Because this procedure is often applied in highly explosive areas, caution and care should be exercised in choosing, installing, and using the appropriate equipment.

4. Equipment and Supplies

Mention of trade names or company products does not constitute endorsement. All gas concentrations (percent, ppm) are by volume, unless otherwise noted.

4.1 Gas VOC Concentration. A schematic of the measurement system is shown in Figure 204C–1. The main components are as follows:

4.1.1 Dilution System. A Kipp in-stack dilution probe and controller or similar device may be used. The dilution rate may be changed by substituting different critical orifices or adjustments of the aspirator supply pressure. The dilution system shall be heated to prevent VOC condensation. Note: An out-of-stack dilution device may be used.

4.1.2 Calibration Valve Assembly. Three-way valve assembly at the outlet of the sample probe to direct the zero and calibration gases to the analyzer. Other methods, such as quick-connect lines, to route calibration gases to the outlet of the sample probe are acceptable.

4.1.3 Sample Line. Stainless steel or Teflon tubing to transport the sample gas to the analyzer. The sample line must be heated to prevent condensation.

4.1.4 Sample Pump. A leak-free pump, to pull the sample gas through the system at a flow rate sufficient to minimize the response time of the measurement system. The components of the pump that contact the gas stream shall be constructed of stainless steel or Teflon. The sample pump must be heated to prevent condensation.

4.1.5 Sample Flow Rate Control. A sample flow rate control valve and rotameter, or equivalent, to maintain a constant sampling rate within 10 percent. The flow control valve and rotameter must be heated to prevent condensation. A control valve may also be located on the sample pump bypass loop to assist in controlling the sample pressure and flow rate.

4.1.6 Sample Gas Manifold. Capable of diverting a portion of the sample gas stream to the FIA, and the remainder to the bypass discharge vent. The manifold components shall be constructed of stainless steel or Teflon. If captured or uncaptured emissions are to be measured at multiple locations, the measurement system shall be designed to use separate sampling probes, lines, and pumps for each measurement location and a common sample gas manifold and FIA. The sample gas manifold and connecting lines to the FIA must be heated to prevent condensation.

Note: Depending on the number of sampling points and their location, it may not be possible to use only one FIA. However to reduce the effect of calibration error, the number of FIA's used during a test should be keep as small as possible.

4.1.7 Organic Concentration Analyzer. An FIA with a span value of 1.5 times the expected concentration as propane; however, other span values may be used if it can be demonstrated to the Administrator's satisfaction that they would provide equally accurate measurements. The system shall be capable of meeting or exceeding the following specifications:

4.1.7.1 Zero Drift. Less than ±3.0 percent of the span value.

4.1.7.2 Calibration Drift. Less than ±3.0 percent of the span value.

4.1.7.3 Calibration Error. Less than ±5.0 percent of the calibration gas value.

4.1.7.4 Response Time. Less than 30 seconds.

4.1.8 Integrator/Data Acquisition System. An analog or digital device or computerized data acquisition system used to integrate the FIA response or compute the average response and record measurement data. The minimum data sampling frequency for computing average or integrated values is one measurement value every 5 seconds. The device shall be capable of recording average values at least once per minute.

4.2 Captured Emissions Volumetric Flow Rate.

4.2.1 Method 2 or 2A Apparatus. For determining volumetric flow rate.

4.2.2 Method 3 Apparatus and Reagents. For determining molecular weight of the gas stream. An estimate of the molecular weight of the gas stream may be used if approved by the Administrator.

4.2.3 Method 4 Apparatus and Reagents. For determining moisture content, if necessary.

5. Reagents and Standards

5.1 Calibration and Other Gases. Gases used for calibration, fuel, and combustion air (if required) are contained in compressed gas cylinders. All calibration gases shall be traceable to National Institute of Standards and Technology standards and shall be certified by the manufacturer to ±1 percent of the tag value. Additionally, the manufacturer of the cylinder should provide a recommended shelf life for each calibration gas cylinder over which the concentration does not change more than ±2 percent from the certified value. For calibration gas values not generally available, dilution systems calibrated using Method 205 may be used. Alternative methods for preparing calibration gas mixtures may be used with the approval of the Administrator.

5.1.1 Fuel. The FIA manufacturer's recommended fuel should be used. A 40 percent H_2/60 percent He or 40 percent H_2/60 percent N_2 gas mixture is recommended to avoid an oxygen synergism effect that reportedly occurs when oxygen concentration varies

significantly from a mean value. Other mixtures may be used provided the tester can demonstrate to the Administrator that there is no oxygen synergism effect

5.1.2 Carrier Gas and Dilution Air Supply. High purity air with less than 1 ppm of organic material (as propane or carbon equivalent), or less than 0.1 percent of the span value, whichever is greater.

5.1.3 FIA Linearity Calibration Gases. Low-, mid-, and high-range gas mixture standards with nominal propane concentrations of 20–30, 45–55, and 70–80 percent of the span value in air, respectively. Other calibration values and other span values may be used if it can be shown to the Administrator's satisfaction that equally accurate measurements would be achieved.

5.1.4 Dilution Check Gas. Gas mixture standard containing propane in air, approximately half the span value after dilution.

5.2 Particulate Filter. An in-stack or an out-of-stack glass fiber filter is recommended if exhaust gas particulate loading is significant. An out-of-stack filter must be heated to prevent any condensation unless it can be demonstrated that no condensation occurs.

6. Quality Control

6.1 Required instrument quality control parameters are found in the following sections:

6.1.1 The FIA system must be calibrated as specified in section 7.1.

6.1.2 The system drift check must be performed as specified in section 7.2.

6.1.3 The dilution factor must be determined as specified in section 7.3.

6.1.4 The system check must be conducted as specified in section 7.4.

6.2 Audits.

6.2.1 Analysis Audit Procedure. Immediately before each test, analyze an audit cylinder as described in section 7.2. The analysis audit must agree with the audit cylinder concentration within 10 percent.

6.2.2 Audit Samples and Audit Sample Availability. Audit samples will be supplied only to enforcement agencies for compliance tests. The availability of audit samples may be obtained by writing: Source Test Audit Coordinator (STAC) (MD–77B), Quality Assurance Division, Atmospheric Research and Exposure Assessment Laboratory, U.S. Environmental Protection Agency, Research Triangle Park, NC 27711 or by calling the STAC at (919) 541–7834. The request for the audit sample must be made at least 30 days prior to the scheduled compliance sample analysis.

6.2.3 Audit Results. Calculate the audit sample concentration according to the calculation procedure described in the audit instructions included with the audit sample. Fill in the audit sample concentration and the analyst's name on the audit response form included with the audit instructions. Send one copy to the EPA Regional Office or the appropriate enforcement agency, and a second copy to the STAC. The EPA Regional Office or the appropriate enforcement agency will report the results of the audit to the laboratory being audited. Include this response with the results of the compliance samples in relevant reports to the EPA Regional Office or the appropriate enforcement agency.

7. Calibration and Standardization

7.1 FIA Calibration and Linearity Check. Make necessary adjustments to the air and fuel supplies for the FIA and ignite the burner. Allow the FIA to warm up for the period recommended by the manufacturer. Inject a calibration gas into the measurement system after the dilution system and adjust the back-pressure regulator to the value required to achieve the flow rates specified by the manufacturer. Inject the zero-and the high-range calibration gases and adjust the analyzer calibration to provide the proper responses. Inject the low-and mid-range gases and record the responses of the measurement system. The calibration and linearity of the system are acceptable if the responses for all four gases are within 5 percent of the respective gas values. If the performance of the system is not acceptable, repair or adjust the system and repeat the linearity check. Conduct a calibration and linearity check after assembling the analysis system and after a major change is made to the system.

7.2 Systems Drift Checks. Select the calibration gas that most closely approximates the concentration of the diluted captured emissions for conducting the drift checks. Introduce the zero and calibration gases at the calibration valve assembly, and verify that the appropriate gas flow rate and pressure are present at the FIA. Record the measurement system responses to the zero and calibration gases. The performance of the system is acceptable if the difference between the drift check measurement and the value obtained in section 7.1 is less than 3 percent of the span value. Alternatively, recalibrate the FIA as in section 7.1 and report the results using both sets of calibration data (i.e., data determined prior to the test period and data determined following the test period). The data that results in the lowest CE value shall be reported as the results for the test run. Conduct the system drift check at the end of each run.

7.3 Determination of Dilution Factor. Inject the dilution check gas into the measurement system before the dilution system and record the response. Calculate the dilution factor using Equation 204C–3.

7.4 System Check. Inject the high-range calibration gas at the inlet to the sampling probe while the dilution air is turned off. Record the response. The performance of the system is acceptable if the measurement system response is within 5 percent of the value obtained in section 7.1 for the high-range calibration gas. Conduct a system check before and after each test run.

8. Procedure

8.1 Determination of Volumetric Flow Rate of Captured Emissions

8.1.1 Locate all points where emissions are captured from the affected facility. Using Method 1, determine the sampling points. Be sure to check each site for cyclonic or swirling flow.

8.2.2 Measure the velocity at each sampling site at least once every hour during each sampling run using Method 2 or 2A.

8.2 Determination of VOC Content of Captured Emissions

8.2.1 Analysis Duration. Measure the VOC responses at each captured emissions point during the entire test run or, if applicable, while the process is operating. If there are multiple captured emissions locations, design a sampling system to allow a single FIA to be used to determine the VOC responses at all sampling locations.

8.2.2 Gas VOC Concentration.

8.2.2.1 Assemble the sample train as shown in Figure 204C–1. Calibrate the FIA according to the procedure in section 7.1.

8.2.2.2 Set the dilution ratio and determine the dilution factor according to the procedure in section 7.3.

8.2.2.3 Conduct a system check according to the procedure in section 7.4.

8.2.2.4 Install the sample probe so that the probe is centrally located in the stack, pipe, or duct, and is sealed tightly at the stack port connection.

8.2.2.5 Inject zero gas at the calibration valve assembly. Measure the system response time as the time required for the system to reach the effluent concentration after the calibration valve has been returned to the effluent sampling position.

8.2.2.6 Conduct a system check before, and a system drift check after,

each sampling run according to the procedures in sections 7.2 and 7.4. If the drift check following a run indicates unacceptable performance (see section 7.4), the run is not valid. Alternatively, recalibrate the FIA as in section 7.1 and report the results using both sets of calibration data (i.e., data determined prior to the test period and data determined following the test period). The data that results in the lowest CE value shall be reported as the results for the test run. The tester may elect to perform system drift checks during the run not to exceed one drift check per hour.

8.2.2.7 Verify that the sample lines, filter, and pump temperatures are 120 ±5 °C.

8.2.2.8 Begin sampling at the start of the test period and continue to sample during the entire run. Record the starting and ending times and any required process information as appropriate. If multiple captured emission locations are sampled using a single FIA, sample at each location for the same amount of time (e.g., 2 min.) and continue to switch from one location to another for the entire test run. Be sure that total sampling time at each location is the same at the end of the test run. Collect at least four separate measurements from each sample point during each hour of testing. Disregard the measurements at each sampling location until two times the response time of the measurement system has elapsed. Continue sampling for at least 1 minute and record the concentration measurements.

8.2.3 Background Concentration.

Note: Not applicable when the building is used as the temporary total enclosure (TTE).

8.2.3.1 Locate all natural draft openings (NDO's) of the TTE. A sampling point shall be at the center of each NDO, unless otherwise approved by the Administrator. If there are more than six NDO's, choose six sampling points evenly spaced among the NDO's.

8.2.3.2 Assemble the sample train as shown in Figure 204C–2. Calibrate the FIA and conduct a system check according to the procedures in sections 7.1 and 7.4.

8.2.3.3 Position the probe at the sampling location.

8.2.3.4 Determine the response time, conduct the system check, and sample according to the procedures described in sections 8.2.2.4 through 8.2.2.8.

8.2.4 Alternative Procedure. The direct interface sampling and analysis procedure described in section 7.2 of Method 18 may be used to determine the gas VOC concentration. The system must be designed to collect and analyze at least one sample every 10 minutes. If the alternative procedure is used to determine the VOC concentration of the captured emissions, it must also be used to determine the VOC concentration of the uncaptured emissions.

9. Data Analysis and Calculations

9.1 Nomenclature.

A_i=area of NDO i, ft^2.

A_N=total area of all NDO's in the enclosure, ft^2.

C_A = actual concentration of the dilution check gas, ppm propane.

C_{Bi}=corrected average VOC concentration of background emissions at point i, ppm propane.

C_B=average background concentration, ppm propane.

C_{DH}=average measured concentration for the drift check calibration gas, ppm propane.

C_{D0}=average system drift check concentration for zero concentration gas, ppm propane.

C_H=actual concentration of the drift check calibration gas, ppm propane.

C_i=uncorrected average background VOC concentration measured at point i, ppm propane.

C_j=uncorrected average VOC concentration measured at point j, ppm propane.

C_M=measured concentration of the dilution check gas, ppm propane.

DF=dilution factor.

G=total VOC content of captured emissions, kg.

K_1=1.830×10^{-6} kg/(m^3 − ppm).

n=number of measurement points.

Q_{Gj}=average effluent volumetric flow rate corrected to standard conditions at captured emissions point j, m^3/min.

Θ_C=total duration of CE sampling run, min.

9.2 Calculations.

9.2.1 Total VOC Captured Emissions.

$$G = \sum_{j=1}^{n} \left(C_{Gj} - C_B\right) Q_{Gj} \theta_C K_1 \quad \text{Eq. 204C-1}$$

9.2.2 VOC Concentration of the Captured Emissions at Point j.

$$C_{Gj} = DF\left(C_j - C_{DO}\right) \frac{C_H}{C_{DH} - C_{DO}} \quad \text{Eq. 204C-2}$$

9.2.3 Dilution Factor.

$$DF = \frac{C_A}{C_M} \quad \text{Eq. 204C-3}$$

9.2.4 Background VOC Concentration at Point i.

$$C_{Bi} = \left(C_i - C_{DO}\right) \frac{C_H}{C_{DH} - C_{DO}} \quad \text{Eq. 204C-4}$$

9.2.5 Average Background Concentration.

$$C_B = \frac{\sum_{i=1}^{n} C_{Bi} A_i}{A_N} \quad \text{Eq. 204C-5}$$

Note: If the concentration at each point is within 20 percent of the average concentration of all points, then use the arithmetic average.

10. Method Performance

The measurement uncertainties are estimated for each captured or uncaptured emissions point as follows: Q_{Gj}=±5.5 percent and C_{Gj}= ±5 percent. Based on these numbers, the probable uncertainty for G is estimated at about ±7.4 percent.

11. Diagrams

BILLING CODE 6560–SO–P

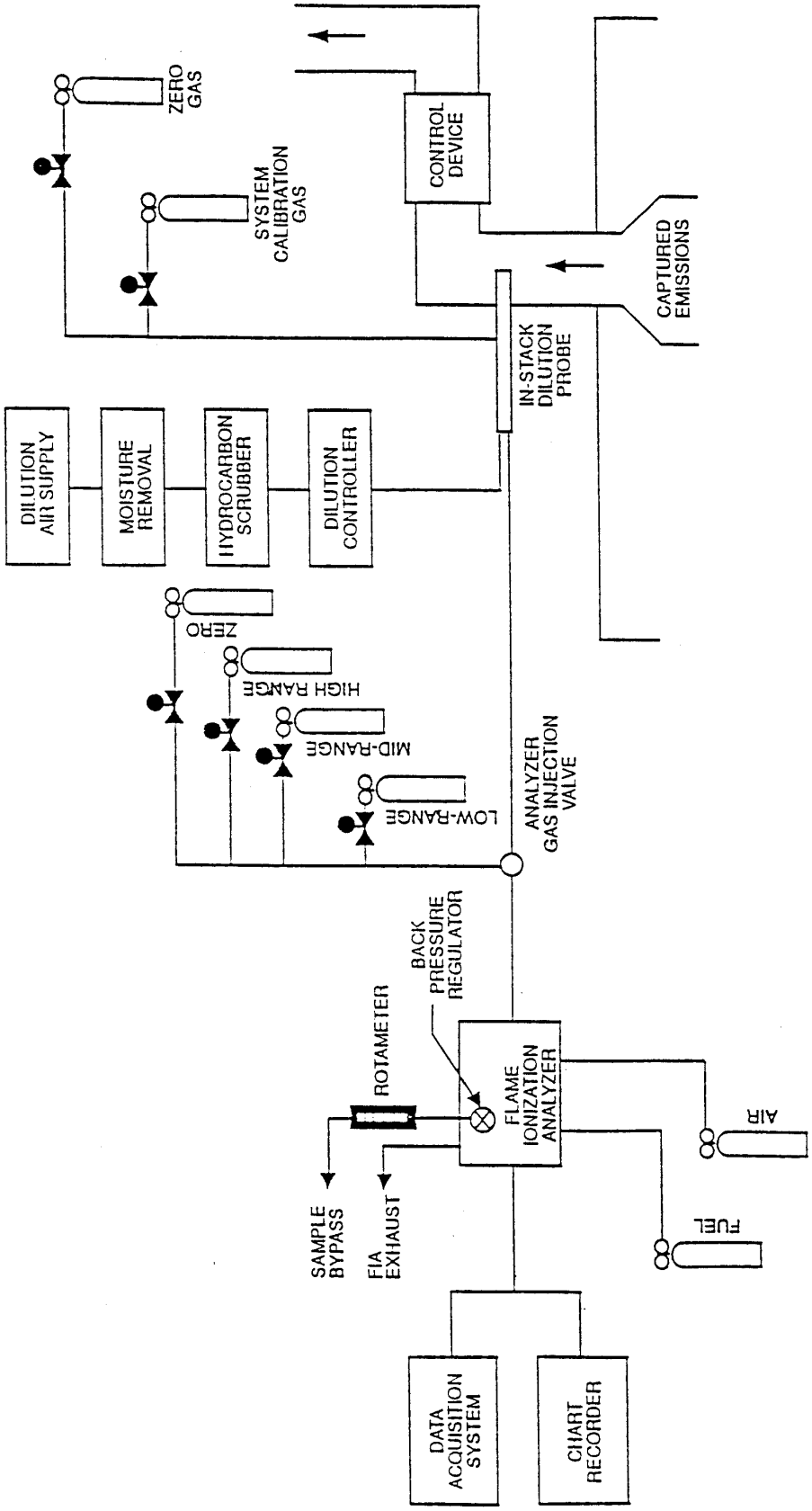

Figure 204C-1. Captured emissions measurement system.

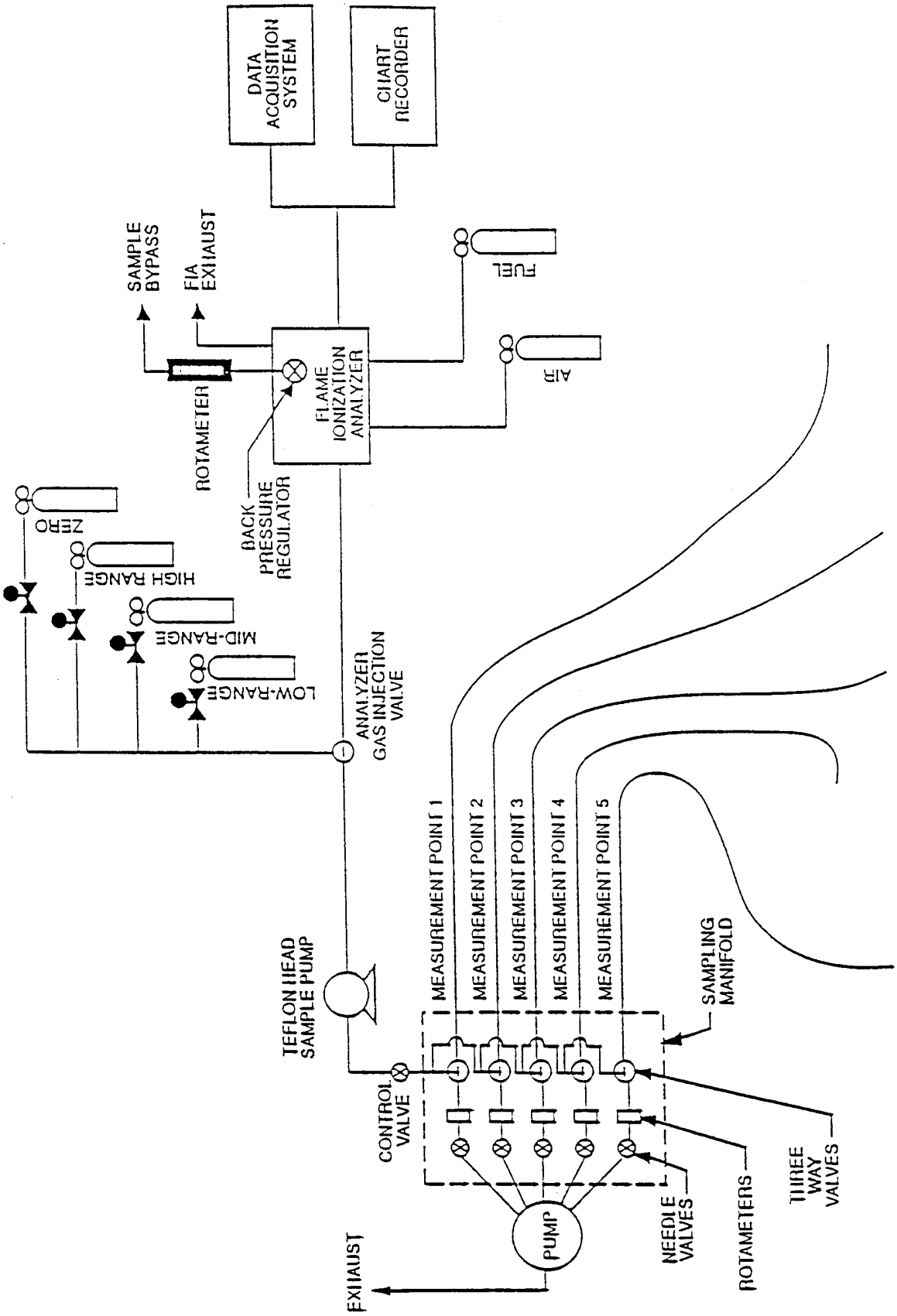

Figure 204C-2. Background measurement system.

BILLING CODE 6560–50–C

Method 204D—Volatile Organic Compounds Emissions in Uncaptured Stream From Temporary Total Enclosure

1. Scope and Application

1.1 Applicability. This procedure is applicable for determining the uncaptured volatile organic compounds (VOC) emissions from a temporary total enclosure (TTE). It is intended to be used as a segment in the development of liquid/gas or gas/gas protocols for determining VOC capture efficiency (CE) for surface coating and printing operations.

1.2 Principle. The amount of uncaptured VOC emissions (F) from the TTE is calculated as the sum of the products of the VOC content (C_{Fj}), the flow rate (Q_{Fj}) from each uncaptured emissions point, and the sampling time (Θ_F).

1.3 Sampling Requirements. A CE test shall consist of at least three sampling runs. Each run shall cover at least one complete production cycle, but shall be at least 3 hours long. The sampling time for each run need not exceed 8 hours, even if the production cycle has not been completed. Alternative sampling times may be used with the approval of the Administrator.

2. Summary of Method

A gas sample is extracted from the uncaptured exhaust duct of a TTE through a heated sample line and, if necessary, a glass fiber filter to a flame ionization analyzer (FIA).

3. Safety

Because this procedure is often applied in highly explosive areas, caution and care should be exercised in choosing, installing, and using the appropriate equipment.

4. Equipment and Supplies

Mention of trade names or company products does not constitute endorsement. All gas concentrations (percent, ppm) are by volume, unless otherwise noted.

4.1 Gas VOC Concentration. A schematic of the measurement system is shown in Figure 204D–1. The main components are as follows:

4.1.1 Sample Probe. Stainless steel or equivalent. The probe shall be heated to prevent VOC condensation.

4.1.2 Calibration Valve Assembly. Three-way valve assembly at the outlet of the sample probe to direct the zero and calibration gases to the analyzer. Other methods, such as quick-connect lines, to route calibration gases to the outlet of the sample probe are acceptable.

4.1.3 Sample Line. Stainless steel or Teflon tubing to transport the sample gas to the analyzer. The sample line must be heated to prevent condensation.

4.1.4 Sample Pump. A leak-free pump, to pull the sample gas through the system at a flow rate sufficient to minimize the response time of the measurement system. The components of the pump that contact the gas stream shall be constructed of stainless steel or Teflon. The sample pump must be heated to prevent condensation.

4.1.5 Sample Flow Rate Control. A sample flow rate control valve and rotameter, or equivalent, to maintain a constant sampling rate within 10 percent. The flow control valve and rotameter must be heated to prevent condensation. A control valve may also be located on the sample pump bypass loop to assist in controlling the sample pressure and flow rate.

4.1.6 Sample Gas Manifold. Capable of diverting a portion of the sample gas stream to the FIA, and the remainder to the bypass discharge vent. The manifold components shall be constructed of stainless steel or Teflon. If emissions are to be measured at multiple locations, the measurement system shall be designed to use separate sampling probes, lines, and pumps for each measurement location and a common sample gas manifold and FIA. The sample gas manifold and connecting lines to the FIA must be heated to prevent condensation.

4.1.7 Organic Concentration Analyzer. An FIA with a span value of 1.5 times the expected concentration as propane; however, other span values may be used if it can be demonstrated to the Administrator's satisfaction that they would provide more accurate measurements. The system shall be capable of meeting or exceeding the following specifications:

4.1.7.1 Zero Drift. Less than ±3.0 percent of the span value.

4.1.7.2 Calibration Drift. Less than ±3.0 percent of the span value.

4.1.7.3 Calibration Error. Less than ±5.0 percent of the calibration gas value.

4.1.7.4 Response Time. Less than 30 seconds.

4.1.8 Integrator/Data Acquisition System. An analog or digital device or computerized data acquisition system used to integrate the FIA response or compute the average response and record measurement data. The minimum data sampling frequency for computing average or integrated values is one measurement value every 5 seconds. The device shall be capable of recording average values at least once per minute.

4.2 Uncaptured Emissions Volumetric Flow Rate.

4.2.1 Method 2 or 2A Apparatus. For determining volumetric flow rate.

4.2.2 Method 3 Apparatus and Reagents. For determining molecular weight of the gas stream. An estimate of the molecular weight of the gas stream may be used if approved by the Administrator.

4.2.3 Method 4 Apparatus and Reagents. For determining moisture content, if necessary.

4.3 Temporary Total Enclosure. The criteria for designing an acceptable TTE are specified in Method 204.

5. Reagents and Standards

5.1 Calibration and Other Gases. Gases used for calibration, fuel, and combustion air (if required) are contained in compressed gas cylinders. All calibration gases shall be traceable to National Institute of Standards and Technology standards and shall be certified by the manufacturer to ±1 percent of the tag value. Additionally, the manufacturer of the cylinder should provide a recommended shelf life for each calibration gas cylinder over which the concentration does not change more than ±2 percent from the certified value. For calibration gas values not generally available, dilution systems calibrated using Method 205 may be used. Alternative methods for preparing calibration gas mixtures may be used with the approval of the Administrator.

5.1.1 Fuel. The FIA manufacturer's recommended fuel should be used. A 40 percent H_2/60 percent He or 40 percent H_2/60 percent N_2 gas mixture is recommended to avoid an oxygen synergism effect that reportedly occurs when oxygen concentration varies significantly from a mean value. Other mixtures may be used provided the tester can demonstrate to the Administrator that there is no oxygen synergism effect.

5.1.2 Carrier Gas. High purity air with less than 1 ppm of organic material (as propane or carbon equivalent) or less than 0.1 percent of the span value, whichever is greater.

5.1.3 FIA Linearity Calibration Gases. Low-, mid-, and high-range gas mixture standards with nominal propane concentrations of 20–30, 45–55, and 70–80 percent of the span value in air, respectively. Other calibration values and other span values may be used if it can be shown to the Administrator's satisfaction that equally accurate measurements would be achieved.

5.2 Particulate Filter. An in-stack or an out-of-stack glass fiber filter is recommended if exhaust gas particulate

loading is significant. An out-of-stack filter must be heated to prevent any condensation unless it can be demonstrated that no condensation occurs.

6. Quality Control

6.1 Required instrument quality control parameters are found in the following sections:

6.1.1 The FIA system must be calibrated as specified in section 7.1.

6.1.2 The system drift check must be performed as specified in section 7.2.

6.1.3 The system check must be conducted as specified in section 7.3.

6.2 Audits.

6.2.1 Analysis Audit Procedure. Immediately before each test, analyze an audit cylinder as described in section 7.2. The analysis audit must agree with the audit cylinder concentration within 10 percent.

6.2.2 Audit Samples and Audit Sample Availability. Audit samples will be supplied only to enforcement agencies for compliance tests. The availability of audit samples may be obtained by writing: Source Test Audit Coordinator (STAC) (MD–77B) Quality Assurance Division, Atmospheric Research and Exposure Assessment Laboratory, U.S. Environmental Protection Agency, Research Triangle Park, NC 27711 or by calling the STAC at (919) 541–7834. The request for the audit sample must be made at least 30 days prior to the scheduled compliance sample analysis.

6.2.3 Audit Results. Calculate the audit sample concentration according to the calculation procedure described in the audit instructions included with the audit sample. Fill in the audit sample concentration and the analyst's name on the audit response form included with the audit instructions. Send one copy to the EPA Regional Office or the appropriate enforcement agency, and a second copy to the STAC. The EPA Regional Office or the appropriate enforcement agency will report the results of the audit to the laboratory being audited. Include this response with the results of the compliance samples in relevant reports to the EPA Regional Office or the appropriate enforcement agency.

7. Calibration and Standardization

7.1 FIA Calibration and Linearity Check. Make necessary adjustments to the air and fuel supplies for the FIA and ignite the burner. Allow the FIA to warm up for the period recommended by the manufacturer. Inject a calibration gas into the measurement system and adjust the back-pressure regulator to the value required to achieve the flow rates specified by the manufacturer. Inject the zero-and the high-range calibration gases and adjust the analyzer calibration to provide the proper responses. Inject the low-and mid-range gases and record the responses of the measurement system. The calibration and linearity of the system are acceptable if the responses for all four gases are within 5 percent of the respective gas values. If the performance of the system is not acceptable, repair or adjust the system and repeat the linearity check. Conduct a calibration and linearity check after assembling the analysis system and after a major change is made to the system.

7.2 Systems Drift Checks. Select the calibration gas concentration that most closely approximates that of the uncaptured gas emissions concentration to conduct the drift checks. Introduce the zero and calibration gases at the calibration valve assembly and verify that the appropriate gas flow rate and pressure are present at the FIA. Record the measurement system responses to the zero and calibration gases. The performance of the system is acceptable if the difference between the drift check measurement and the value obtained in section 7.1 is less than 3 percent of the span value. Alternatively, recalibrate the FIA as in section 7.1 and report the results using both sets of calibration data (i.e., data determined prior to the test period and data determined following the test period). The data that results in the lowest CE value shall be reported as the results for the test run. Conduct a system drift check at the end of each run.

7.3 System Check. Inject the high-range calibration gas at the inlet of the sampling probe and record the response. The performance of the system is acceptable if the measurement system response is within 5 percent of the value obtained in section 7.1 for the high-range calibration gas. Conduct a system check before each test run.

8. Procedure

8.1 Determination of Volumetric Flow Rate of Uncaptured Emissions

8.1.1 Locate all points where uncaptured emissions are exhausted from the TTE. Using Method 1, determine the sampling points. Be sure to check each site for cyclonic or swirling flow.

8.1.2 Measure the velocity at each sampling site at least once every hour during each sampling run using Method 2 or 2A.

8.2 Determination of VOC Content of Uncaptured Emissions.

8.2.1 Analysis Duration. Measure the VOC responses at each uncaptured emission point during the entire test run or, if applicable, while the process is operating. If there are multiple emission locations, design a sampling system to allow a single FIA to be used to determine the VOC responses at all sampling locations.

8.2.2 Gas VOC Concentration.

8.2.2.1 Assemble the sample train as shown in Figure 204D–1. Calibrate the FIA and conduct a system check according to the procedures in sections 7.1 and 7.3, respectively.

8.2.2.2 Install the sample probe so that the probe is centrally located in the stack, pipe, or duct, and is sealed tightly at the stack port connection.

8.2.2.3 Inject zero gas at the calibration valve assembly. Allow the measurement system response to reach zero. Measure the system response time as the time required for the system to reach the effluent concentration after the calibration valve has been returned to the effluent sampling position.

8.2.2.4 Conduct a system check before, and a system drift check after, each sampling run according to the procedures in sections 7.2 and 7.3. If the drift check following a run indicates unacceptable performance (see section 7.3), the run is not valid. Alternatively, recalibrate the FIA as in section 7.1 and report the results using both sets of calibration data (i.e., data determined prior to the test period and data determined following the test period). The data that results in the lowest CE value shall be reported as the results for the test run. The tester may elect to perform system drift checks during the run not to exceed one drift check per hour.

8.2.2.5 Verify that the sample lines, filter, and pump temperatures are 120±5 °C.

8.2.2.6 Begin sampling at the start of the test period and continue to sample during the entire run. Record the starting and ending times and any required process information, as appropriate. If multiple emission locations are sampled using a single FIA, sample at each location for the same amount of time (e.g., 2 min.) and continue to switch from one location to another for the entire test run. Be sure that total sampling time at each location is the same at the end of the test run. Collect at least four separate measurements from each sample point during each hour of testing. Disregard the response measurements at each sampling location until 2 times the response time of the measurement system has elapsed. Continue sampling for at least 1 minute and record the concentration measurements.

8.2.3 Background Concentration.

8.2.3.1 Locate all natural draft openings (NDO's) of the TTE. A sampling point shall be at the center of each NDO, unless otherwise approved by the Administrator. If there are more than six NDO's, choose six sampling points evenly spaced among the NDO's.

8.2.3.2 Assemble the sample train as shown in Figure 204D–2. Calibrate the FIA and conduct a system check according to the procedures in sections 7.1 and 7.3.

8.2.3.3 Position the probe at the sampling location.

8.2.3.4 Determine the response time, conduct the system check, and sample according to the procedures described in sections 8.2.2.3 through 8.2.2.6.

8.2.4 Alternative Procedure. The direct interface sampling and analysis procedure described in section 7.2 of Method 18 may be used to determine the gas VOC concentration. The system must be designed to collect and analyze at least one sample every 10 minutes. If the alternative procedure is used to determine the VOC concentration of the uncaptured emissions in a gas/gas protocol, it must also be used to determine the VOC concentration of the captured emissions. If a tester wishes to conduct a liquid/gas protocol using a gas chromatograph, the tester must use Method 204F for the liquid steam. A gas chromatograph is not an acceptable alternative to the FIA in Method 204A.

9. Data Analysis and Calculations

9.1 Nomenclature.

A_i=area of NDO i, ft².

A_N=total area of all NDO's in the enclosure, ft².

C_{Bi}=corrected average VOC concentration of background emissions at point i, ppm propane.

C_B=average background concentration, ppm propane.

C_{DH}=average measured concentration for the drift check calibration gas, ppm propane.

C_{D0}=average system drift check concentration for zero concentration gas, ppm propane.

C_{Fj}=corrected average VOC concentration of uncaptured emissions at point j, ppm propane.

C_H=actual concentration of the drift check calibration gas, ppm propane.

C_i=uncorrected average background VOC concentration at point i, ppm propane.

C_j=uncorrected average VOC concentration measured at point j, ppm propane.

F=total VOC content of uncaptured emissions, kg.

K_1=1.830 x 10^{-6} kg/(m³-ppm).

n=number of measurement points.

Q_{Fj}=average effluent volumetric flow rate corrected to standard conditions at uncaptured emissions point j, m³/min.

Θ_F=total duration of uncaptured emissions sampling run, min.

9.2 Calculations.

9.2.1 Total Uncaptured VOC Emissions.

$$F = \sum_{j=1}^{n} \left(C_{Fj} - C_B\right) Q_{Fj} \theta_F K_1 \qquad \text{Eq. 204D-1}$$

9.2.2 VOC Concentration of the Uncaptured Emissions at Point j.

$$C_{Fj} = \left(C_j - C_{DO}\right) \frac{C_H}{C_{DH} - C_{DO}} \qquad \text{Eq. 204D-2}$$

9.2.3 Background VOC Concentration at Point i.

$$C_{Bi} = \left(C_i - C_{DO}\right) \frac{C_H}{C_{DH} - C_{DO}} \qquad \text{Eq. 204D-3}$$

9.2.4 Average Background Concentration.

$$C_B = \frac{\sum_{i=1}^{n} C_{Bi} A_i}{A_N} \qquad \text{Eq. 204D-4}$$

Note: If the concentration at each point is within 20 percent of the average concentration of all points, use the arithmetic average.

10. Method Performance

The measurement uncertainties are estimated for each uncaptured emission point as follows: Q_{Fj}=±5.5 percent and C_{Fj}=±5.0 percent. Based on these numbers, the probable uncertainty for F is estimated at about ±7.4 percent.

11. Diagrams

BILLING CODE 6560–50–P

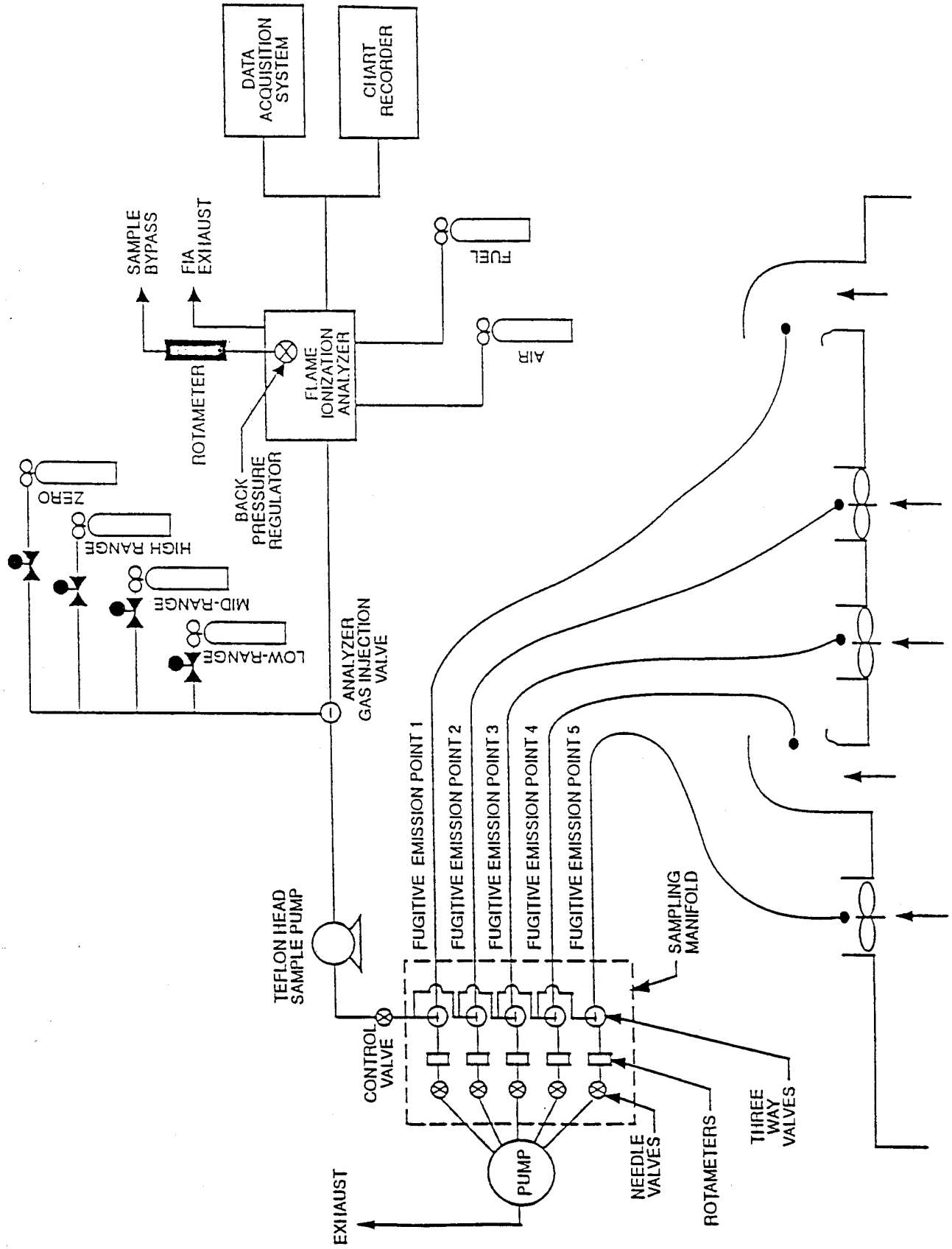

Figure 204D-1. Fugitive emissions measurement system.

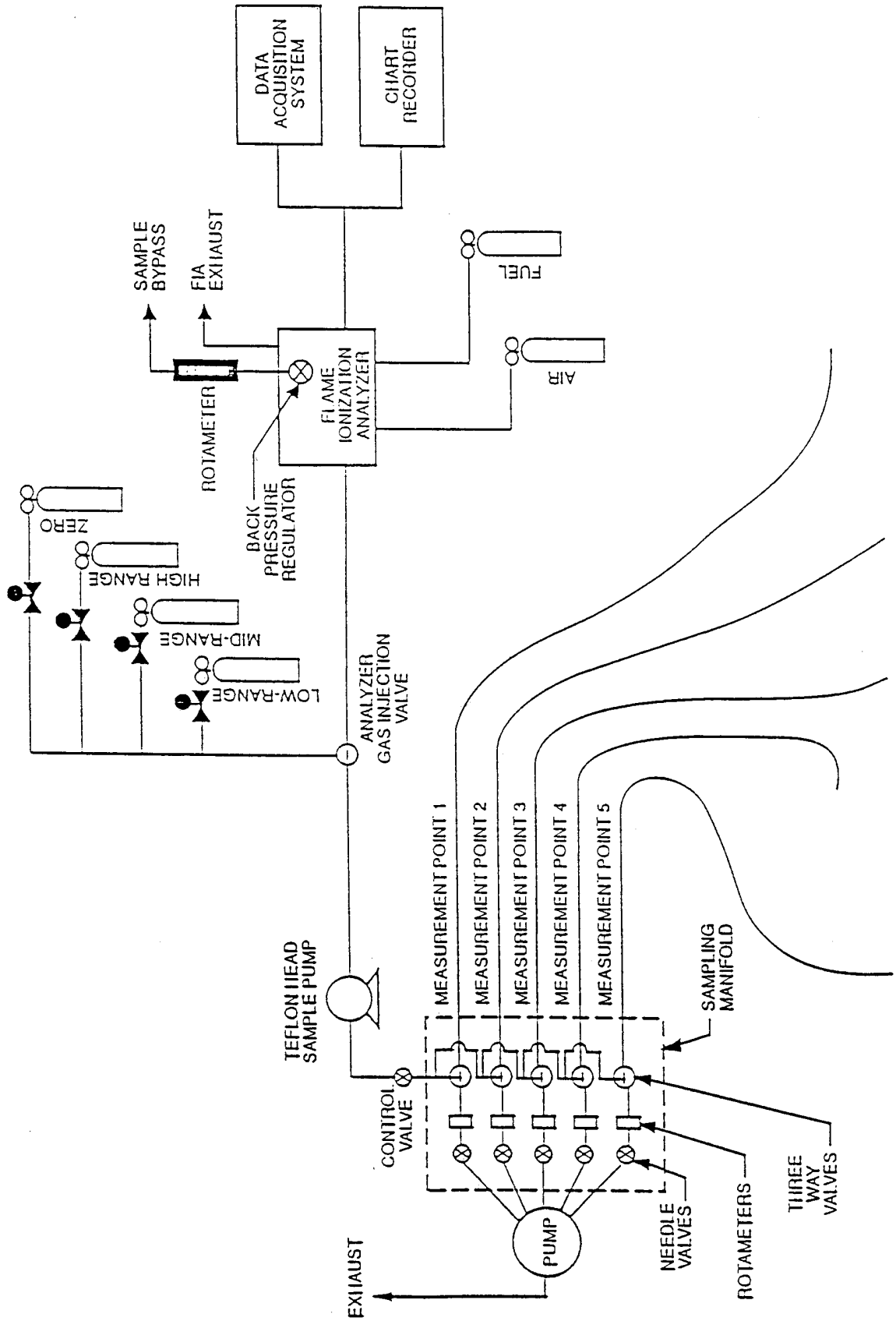

Figure 204D-2. Background measurement system.

BILLING CODE 6560–50–C

Method 204E—Volatile Organic Compounds Emissions in Uncaptured Stream From Building Enclosure

1. Scope and Application

1.1 Applicability. This procedure is applicable for determining the uncaptured volatile organic compounds (VOC) emissions from a building enclosure (BE). It is intended to be used in the development of liquid/gas or gas/gas protocols for determining VOC capture efficiency (CE) for surface coating and printing operations.

1.2 Principle. The total amount of uncaptured VOC emissions (F_B) from the BE is calculated as the sum of the products of the VOC content (C_{Fj}) of each uncaptured emissions point, the flow rate (Q_{Fj}) at each uncaptured emissions point, and time (Θ_F).

1.3 Sampling Requirements. A CE test shall consist of at least three sampling runs. Each run shall cover at least one complete production cycle, but shall be at least 3 hours long. The sampling time for each run need not exceed 8 hours, even if the production cycle has not been completed. Alternative sampling times may be used with the approval of the Administrator.

2. Summary of Method

A gas sample is extracted from the uncaptured exhaust duct of a BE through a heated sample line and, if necessary, a glass fiber filter to a flame ionization analyzer (FIA).

3. Safety

Because this procedure is often applied in highly explosive areas, caution and care should be exercised in choosing, installing, and using the appropriate equipment.

4. Equipment and Supplies

Mention of trade names or company products does not constitute endorsement. All gas concentrations (percent, ppm) are by volume, unless otherwise noted.

4.1 Gas VOC Concentration. A schematic of the measurement system is shown in Figure 204E–1. The main components are as follows:

4.1.1 Sample Probe. Stainless steel or equivalent. The probe shall be heated to prevent VOC condensation.

4.1.2 Calibration Valve Assembly. Three-way valve assembly at the outlet of the sample probe to direct the zero and calibration gases to the analyzer. Other methods, such as quick-connect lines, to route calibration gases to the outlet of the sample probe are acceptable.

4.1.3 Sample Line. Stainless steel or Teflon tubing to transport the sample gas to the analyzer. The sample line must be heated to prevent condensation.

4.1.4 Sample Pump. A leak-free pump, to pull the sample gas through the system at a flow rate sufficient to minimize the response time of the measurement system. The components of the pump that contact the gas stream shall be constructed of stainless steel or Teflon. The sample pump must be heated to prevent condensation.

4.1.5 Sample Flow Rate Control. A sample flow rate control valve and rotameter, or equivalent, to maintain a constant sampling rate within 10 percent. The flow rate control valve and rotameter must be heated to prevent condensation. A control valve may also be located on the sample pump bypass loop to assist in controlling the sample pressure and flow rate.

4.1.6 Sample Gas Manifold. Capable of diverting a portion of the sample gas stream to the FIA, and the remainder to the bypass discharge vent. The manifold components shall be constructed of stainless steel or Teflon. If emissions are to be measured at multiple locations, the measurement system shall be designed to use separate sampling probes, lines, and pumps for each measurement location, and a common sample gas manifold and FIA. The sample gas manifold must be heated to prevent condensation.

4.1.7 Organic Concentration Analyzer. An FIA with a span value of 1.5 times the expected concentration as propane; however, other span values may be used if it can be demonstrated to the Administrator's satisfaction that they would provide equally accurate measurements. The system shall be capable of meeting or exceeding the following specifications:

4.1.7.1 Zero Drift. Less than ±3.0 percent of the span value.

4.1.7.2 Calibration Drift. Less than ±3.0 percent of the span value.

4.1.7.3 Calibration Error. Less than ±5.0 percent of the calibration gas value.

4.1.7.4 Response Time. Less than 30 seconds.

4.1.8 Integrator/Data Acquisition System. An analog or digital device or computerized data acquisition system used to integrate the FIA response or compute the average response and record measurement data. The minimum data sampling frequency for computing average or integrated values is one measurement value every 5 seconds. The device shall be capable of recording average values at least once per minute.

4.2 Uncaptured Emissions Volumetric Flow Rate.

4.2.1 Flow Direction Indicators. Any means of indicating inward or outward flow, such as light plastic film or paper streamers, smoke tubes, filaments, and sensory perception.

4.2.2 Method 2 or 2A Apparatus. For determining volumetric flow rate. Anemometers or similar devices calibrated according to the manufacturer's instructions may be used when low velocities are present. Vane anemometers (Young-maximum response propeller), specialized pitots with electronic manometers (e.g., Shortridge Instruments Inc., Airdata Multimeter 860) are commercially available with measurement thresholds of 15 and 8 mpm (50 and 25 fpm), respectively.

4.2.3 Method 3 Apparatus and Reagents. For determining molecular weight of the gas stream. An estimate of the molecular weight of the gas stream may be used if approved by the Administrator.

4.2.4 Method 4 Apparatus and Reagents. For determining moisture content, if necessary.

4.3 Building Enclosure. The criteria for an acceptable BE are specified in Method 204.

5. Reagents and Standards

5.1 Calibration and Other Gases. Gases used for calibration, fuel, and combustion air (if required) are contained in compressed gas cylinders. All calibration gases shall be traceable to National Institute of Standards and Technology standards and shall be certified by the manufacturer to ±1 percent of the tag value. Additionally, the manufacturer of the cylinder should provide a recommended shelf life for each calibration gas cylinder over which the concentration does not change more than ±2 percent from the certified value. For calibration gas values not generally available, dilution systems calibrated using Method 205 may be used. Alternative methods for preparing calibration gas mixtures may be used with the approval of the Administrator.

5.1.1 Fuel. The FIA manufacturer's recommended fuel should be used. A 40 percent H_2/60 percent He or 40 percent H_2/60 percent N_2 gas mixture is recommended to avoid an oxygen synergism effect that reportedly occurs when oxygen concentration varies significantly from a mean value. Other mixtures may be used provided the tester can demonstrate to the Administrator that there is no oxygen synergism effect.

5.1.2 Carrier Gas. High purity air with less than 1 ppm of organic material (propane or carbon equivalent) or less than 0.1 percent of the span value, whichever is greater.

5.1.3 FIA Linearity Calibration Gases. Low-, mid-, and high-range gas mixture standards with nominal propane concentrations of 20–30, 45–55, and 70–80 percent of the span value in air, respectively. Other calibration values and other span values may be used if it can be shown to the Administrator's satisfaction that equally accurate measurements would be achieved.

5.2 Particulate Filter. An in-stack or an out-of-stack glass fiber filter is recommended if exhaust gas particulate loading is significant. An out-of-stack filter must be heated to prevent any condensation unless it can be demonstrated that no condensation occurs.

6. Quality Control

6.1 Required instrument quality control parameters are found in the following sections:

6.1.1 The FIA system must be calibrated as specified in section 7.1.

6.1.2 The system drift check must be performed as specified in section 7.2.

6.1.3 The system check must be conducted as specified in section 7.3.

6.2 Audits.

6.2.1 Analysis Audit Procedure. Immediately before each test, analyze an audit cylinder as described in section 7.2. The analysis audit must agree with the audit cylinder concentration within 10 percent.

6.2.2 Audit Samples and Audit Sample Availability. Audit samples will be supplied only to enforcement agencies for compliance tests. The availability of audit samples may be obtained by writing: Source Test Audit Coordinator (STAC) (MD–77B), Quality Assurance Division, Atmospheric Research and Exposure Assessment Laboratory, U.S. Environmental Protection Agency, Research Triangle Park, NC 27711 or by calling the STAC at (919) 541–7834. The request for the audit sample must be made at least 30 days prior to the scheduled compliance sample analysis.

6.2.3 Audit Results. Calculate the audit sample concentration according to the calculation procedure described in the audit instructions included with the audit sample. Fill in the audit sample concentration and the analyst's name on the audit response form included with the audit instructions. Send one copy to the EPA Regional Office or the appropriate enforcement agency, and a second copy to the STAC. The EPA Regional Office or the appropriate enforcement agency will report the results of the audit to the laboratory being audited. Include this response with the results of the compliance samples in relevant reports to the EPA Regional Office or the appropriate enforcement agency.

7. Calibration and Standardization

7.1 FIA Calibration and Linearity Check. Make necessary adjustments to the air and fuel supplies for the FIA and ignite the burner. Allow the FIA to warm up for the period recommended by the manufacturer. Inject a calibration gas into the measurement system and adjust the back-pressure regulator to the value required to achieve the flow rates specified by the manufacturer. Inject the zero-and the high-range calibration gases, and adjust the analyzer calibration to provide the proper responses. Inject the low-and mid-range gases and record the responses of the measurement system. The calibration and linearity of the system are acceptable if the responses for all four gases are within 5 percent of the respective gas values. If the performance of the system is not acceptable, repair or adjust the system and repeat the linearity check. Conduct a calibration and linearity check after assembling the analysis system and after a major change is made to the system.

7.2 Systems Drift Checks. Select the calibration gas that most closely approximates the concentration of the captured emissions for conducting the drift checks. Introduce the zero and calibration gases at the calibration valve assembly and verify that the appropriate gas flow rate and pressure are present at the FIA. Record the measurement system responses to the zero and calibration gases. The performance of the system is acceptable if the difference between the drift check measurement and the value obtained in section 7.1 is less than 3 percent of the span value. Alternatively, recalibrate the FIA as in section 7.1 and report the results using both sets of calibration data (i.e., data determined prior to the test period and data determined following the test period). The data that results in the lowest CE value shall be reported as the results for the test run. Conduct a system drift check at the end of each run.

7.3 System Check. Inject the high-range calibration gas at the inlet of the sampling probe and record the response. The performance of the system is acceptable if the measurement system response is within 5 percent of the value obtained in section 7.1 for the high-range calibration gas. Conduct a system check before each test run.

8. Procedure

8.1 Preliminary Determinations. The following points are considered exhaust points and should be measured for volumetric flow rates and VOC concentrations:

8.1.1 Forced Draft Openings. Any opening in the facility with an exhaust fan. Determine the volumetric flow rate according to Method 2.

8.1.2 Roof Openings. Any openings in the roof of a facility which does not contain fans are considered to be exhaust points. Determine volumetric flow rate from these openings. Use the appropriate velocity measurement devices (e.g., propeller anemometers).

8.2 Determination of Flow Rates.

8.2.1 Measure the volumetric flow rate at all locations identified as exhaust points in section 8.1. Divide each exhaust opening into nine equal areas for rectangular openings and into eight equal areas for circular openings.

8.2.2 Measure the velocity at each site at least once every hour during each sampling run using Method 2 or 2A, if applicable, or using the low velocity instruments in section 4.2.2.

8.3 Determination of VOC Content of Uncaptured Emissions.

8.3.1 Analysis Duration. Measure the VOC responses at each uncaptured emissions point during the entire test run or, if applicable, while the process is operating. If there are multiple emissions locations, design a sampling system to allow a single FIA to be used to determine the VOC responses at all sampling locations.

8.3.2 Gas VOC Concentration.

8.3.2.1 Assemble the sample train as shown in Figure 204E–1. Calibrate the FIA and conduct a system check according to the procedures in sections 7.1 and 7.3, respectively.

8.3.2.2 Install the sample probe so that the probe is centrally located in the stack, pipe, or duct, and is sealed tightly at the stack port connection.

8.3.2.3 Inject zero gas at the calibration valve assembly. Allow the measurement system response to reach zero. Measure the system response time as the time required for the system to reach the effluent concentration after the calibration valve has been returned to the effluent sampling position.

8.3.2.4 Conduct a system check before, and a system drift check after, each sampling run according to the procedures in sections 7.2 and 7.3. If the drift check following a run indicates unacceptable performance (see section 7.3), the run is not valid. Alternatively, recalibrate the FIA as in section 7.1 and report the results using both sets of calibration data (i.e., data determined prior to the test period and data determined following the test period). The data that results in the lowest CE value shall be reported as the results for

the test run. The tester may elect to perform drift checks during the run, not to exceed one drift check per hour.

8.3.2.5 Verify that the sample lines, filter, and pump temperatures are 120 ±5 °C.

8.3.2.6 Begin sampling at the start of the test period and continue to sample during the entire run. Record the starting and ending times, and any required process information, as appropriate. If multiple emission locations are sampled using a single FIA, sample at each location for the same amount of time (e.g., 2 minutes) and continue to switch from one location to another for the entire test run. Be sure that total sampling time at each location is the same at the end of the test run. Collect at least four separate measurements from each sample point during each hour of testing. Disregard the response measurements at each sampling location until 2 times the response time of the measurement system has elapsed. Continue sampling for at least 1 minute, and record the concentration measurements.

8.4 Alternative Procedure. The direct interface sampling and analysis procedure described in section 7.2 of Method 18 may be used to determine the gas VOC concentration. The system must be designed to collect and analyze at least one sample every 10 minutes. If the alternative procedure is used to determine the VOC concentration of the uncaptured emissions in a gas/gas protocol, it must also be used to determine the VOC concentration of the captured emissions. If a tester wishes to conduct a liquid/gas protocol using a gas chromatograph, the tester must use Method 204F for the liquid steam. A gas chromatograph is not an acceptable alternative to the FIA in Method 204A.

9. Data Analysis and Calculations

9.1 Nomenclature.

C_{DH}=average measured concentration for the drift check calibration gas, ppm propane.

C_{D0}=average system drift check concentration for zero concentration gas, ppm propane.

C_{Fj}=corrected average VOC concentration of uncaptured emissions at point j, ppm propane.

C_H=actual concentration of the drift check calibration gas, ppm propane.

C_j=uncorrected average VOC concentration measured at point j, ppm propane.

F_B=total VOC content of uncaptured emissions from the building, kg.

K_1=1.830×10^{-6} kg/(m^3–ppm).

n=number of measurement points.

Q_{Fj}=average effluent volumetric flow rate corrected to standard conditions at uncaptured emissions point j, m^3/min.

Θ_F=total duration of CE sampling run, min.

9.2 Calculations

9.2.1 Total VOC Uncaptured Emissions from the Building.

$$F_B = \sum_{j=1}^{n} C_{Fj} Q_{Fj} \theta_F K_1 \qquad \text{Eq. 204E-1}$$

9.2.2 VOC Concentration of the Uncaptured Emissions at Point j.

$$C_{Fj} = \left(C_j - C_{DO}\right) \frac{C_H}{C_{DH} - C_{DO}} \qquad \text{Eq. 204E-2}$$

10. Method Performance

The measurement uncertainties are estimated for each uncaptured emissions point as follows: Q_{Fj}=±10.0 percent and C_{Fj}=± 5.0 percent. Based on these numbers, the probable uncertainty for F_B is estimated at about ±11.2 percent.

11. Diagrams

BILLING CODE 6560–50–P

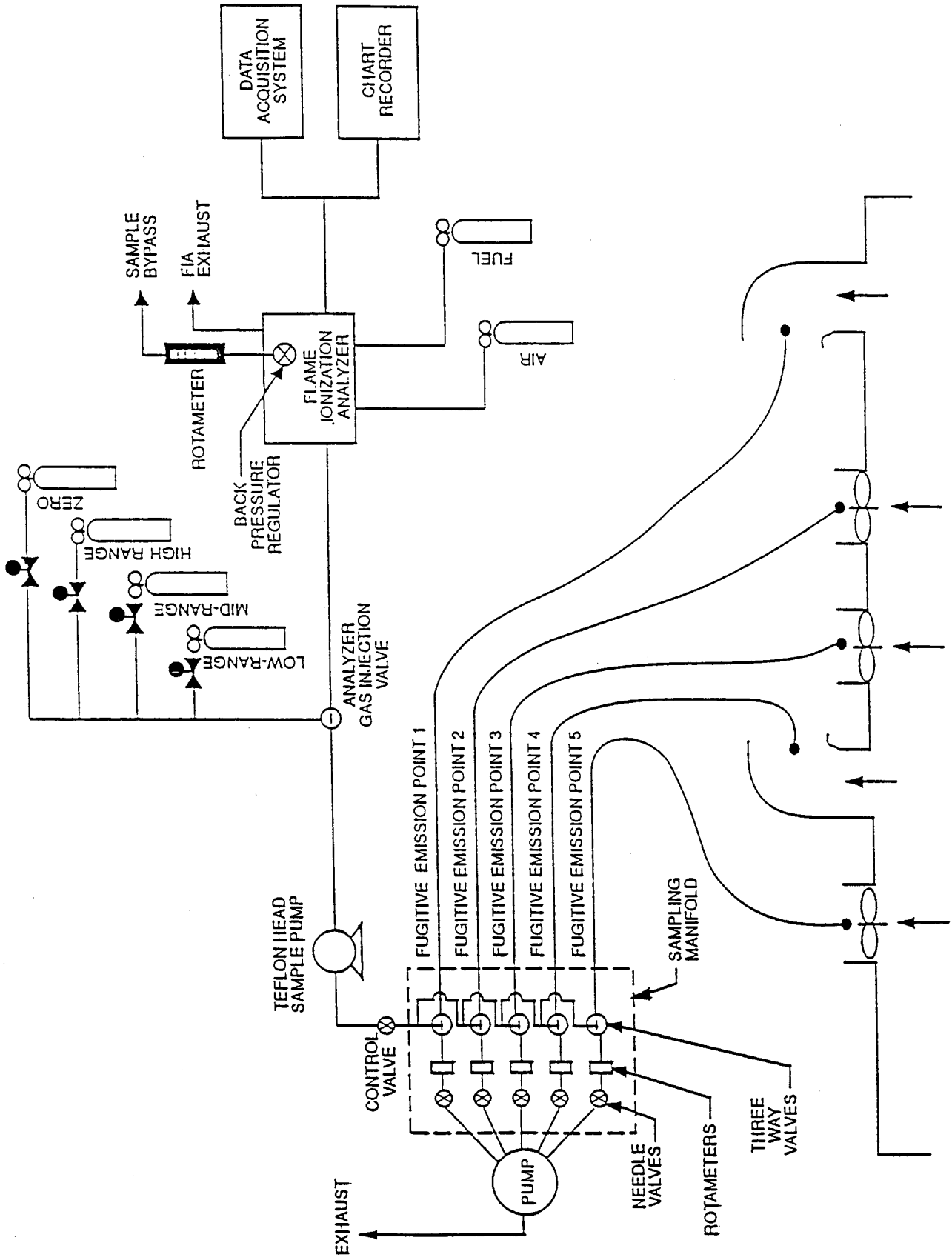

Figure 204E-1. Fugitive emissions measurement system.

BILLING CODE 6560–50–C

Method 204F—Volatile Organic Compounds Content in Liquid Input Stream (Distillation Approach)

1. Introduction

1.1 Applicability. This procedure is applicable for determining the input of volatile organic compounds (VOC). It is intended to be used as a segment in the development of liquid/gas protocols for determining VOC capture efficiency (CE) for surface coating and printing operations.

1.2 Principle. The amount of VOC introduced to the process (L) is the sum of the products of the weight (W) of each VOC containing liquid (ink, paint, solvent, etc.) used, and its VOC content (V), corrected for a response factor (RF).

1.3 Sampling Requirements. A CE test shall consist of at least three sampling runs. Each run shall cover at least one complete production cycle, but shall be at least 3 hours long. The sampling time for each run need not exceed 8 hours, even if the production cycle has not been completed. Alternative sampling times may be used with the approval of the Administrator.

2. Summary of Method

A sample of each coating used is distilled to separate the VOC fraction. The distillate is used to prepare a known standard for analysis by an flame ionization analyzer (FIA), calibrated against propane, to determine its RF.

3. Safety

Because this procedure is often applied in highly explosive areas, caution and care should be exercised in choosing, installing, and using the appropriate equipment.

4. Equipment and Supplies

Mention of trade names or company products does not constitute endorsement. All gas concentrations (percent, ppm) are by volume, unless otherwise noted.

4.1 Liquid Weight.

4.1.1 Balances/Digital Scales. To weigh drums of VOC containing liquids to within 0.2 lb or 1.0 percent of the total weight of VOC liquid used.

4.1.2 Volume Measurement Apparatus (Alternative). Volume meters, flow meters, density measurement equipment, etc., as needed to achieve the same accuracy as direct weight measurements.

4.2 Response Factor Determination (FIA Technique). The VOC distillation system and Tedlar gas bag generation system apparatuses are shown in Figures 204F–1 and 204F–2, respectively. The following equipment is required:

4.2.1 Sample Collection Can. An appropriately-sized metal can to be used to collect VOC containing materials. The can must be constructed in such a way that it can be grounded to the coating container.

4.2.2 Needle Valves. To control gas flow.

4.2.3 Regulators. For calibration, dilution, and sweep gas cylinders.

4.2.4 Tubing and Fittings. Teflon and stainless steel tubing and fittings with diameters, lengths, and sizes determined by the connection requirements of the equipment.

4.2.5 Thermometer. Capable of measuring the temperature of the hot water and oil baths to within 1 °C.

4.2.6 Analytical Balance. To measure ±0.01 mg.

4.2.7 Microliter Syringe. 10–µl size.

4.2.8 Vacuum Gauge or Manometer. 0– to 760–mm (0– to 30–in.) Hg U-Tube manometer or vacuum gauge.

4.2.9 Hot Oil Bath, With Stirring Hot Plate. Capable of heating and maintaining a distillation vessel at 110 ± 3 °C.

4.2.10 Ice Water Bath. To cool the distillation flask.

4.2.11 Vacuum/Water Aspirator. A device capable of drawing a vacuum to within 20 mm Hg from absolute.

4.2.12 Rotary Evaporator System. Complete with folded inner coil, vertical style condenser, rotary speed control, and Teflon sweep gas delivery tube with valved inlet. Buchi Rotavapor or equivalent.

4.2.13 Ethylene Glycol Cooling/Circulating Bath. Capable of maintaining the condenser coil fluid at –10 °C.

4.2.14 Dry Gas Meter (DGM). Capable of measuring the dilution gas volume within 2 percent, calibrated with a spirometer or bubble meter, and equipped with a temperature gauge capable of measuring temperature within 3 °C.

4.2.15 Activated Charcoal/Mole Sieve Trap. To remove any trace level of organics picked up from the DGM.

4.2.16 Gas Coil Heater. Sufficient length of 0.125-inch stainless steel tubing to allow heating of the dilution gas to near the water bath temperature before entering the volatilization vessel.

4.2.17 Water Bath, With Stirring Hot Plate. Capable of heating and maintaining a volatilization vessel and coil heater at a temperature of 100 ± 5 °C.

4.2.18 Volatilization Vessel. 50–ml midget impinger fitted with a septum top and loosely filled with glass wool to increase the volatilization surface.

4.2.19 Tedlar Gas Bag. Capable of holding 30 liters of gas, flushed clean with zero air, leak tested, and evacuated.

4.2.20 Organic Concentration Analyzer. An FIA with a span value of 1.5 times the expected concentration as propane; however, other span values may be used if it can be demonstrated that they would provide equally accurate measurements. The FIA instrument should be the same instrument used in the gaseous analyses adjusted with the same fuel, combustion air, and sample back-pressure (flow rate) settings. The system shall be capable of meeting or exceeding the following specifications:

4.2.20.1 Zero Drift. Less than ±3.0 percent of the span value.

4.2.20.2 Calibration Drift. Less than ±3.0 percent of the span value.

4.2.20.3 Calibration Error. Less than ±3.0 percent of the calibration gas value.

4.2.21 Integrator/Data Acquisition System. An analog or digital device or computerized data acquisition system used to integrate the FIA response or compute the average response and record measurement data. The minimum data sampling frequency for computing average or integrated value is one measurement value every 5 seconds. The device shall be capable of recording average values at least once per minute.

4.2.22 Chart Recorder (Optional). A chart recorder or similar device is recommended to provide a continuous analog display of the measurement results during the liquid sample analysis.

5. Reagents and Standards

5.1 Zero Air. High purity air with less than 1 ppm of organic material (as propane) or less than 0.1 percent of the span value, whichever is greater. Used to supply dilution air for making the Tedlar bag gas samples.

5.2 THC Free N_2. High purity N_2 with less than 1 ppm THC. Used as sweep gas in the rotary evaporator system.

5.3 Calibration and Other Gases. Gases used for calibration, fuel, and combustion air (if required) are contained in compressed gas cylinders. All calibration gases shall be traceable to National Institute of Standards and Technology standards and shall be certified by the manufacturer to ±1 percent of the tag value. Additionally, the manufacturer of the cylinder should provide a recommended shelf life for each calibration gas cylinder over which the concentration does not change more than ±2 percent from the certified value. For calibration gas values not generally available, dilution systems calibrated using Method 205 may be used. Alternative methods for preparing

calibration gas mixtures may be used with the approval of the Administrator.

5.3.1 Fuel. The FIA manufacturer's recommended fuel should be used. A 40 percent H_2/60 percent He, or 40 percent H_2/60 percent N_2 mixture is recommended to avoid fuels with oxygen to avoid an oxygen synergism effect that reportedly occurs when oxygen concentration varies significantly from a mean value. Other mixtures may be used provided the tester can demonstrate to the Administrator that there is no oxygen synergism effect.

5.3.2 Combustion Air. High purity air with less than 1 ppm of organic material (as propane) or less than 0.1 percent of the span value, whichever is greater.

5.3.3 FIA Linearity Calibration Gases. Low-, mid-, and high-range gas mixture standards with nominal propane concentration of 20–30, 45–55, and 70–80 percent of the span value in air, respectively. Other calibration values and other span values may be used if it can be shown that equally accurate measurements would be achieved.

5.3.4 System Calibration Gas. Gas mixture standard containing propane in air, approximating the VOC concentration expected for the Tedlar gas bag samples.

6. Quality Control

6.1 Required instrument quality control parameters are found in the following sections:

6.1.1 The FIA system must be calibrated as specified in section 7.1.

6.1.2 The system drift check must be performed as specified in section 7.2.

6.2 Precision Control. A minimum of one sample in each batch must be distilled and analyzed in duplicate as a precision control. If the results of the two analyses differ by more than ±10 percent of the mean, then the system must be reevaluated and the entire batch must be redistilled and analyzed.

6.3 Audits.

6.3.1 Audit Procedure. Concurrently, analyze the audit sample and a set of compliance samples in the same manner to evaluate the technique of the analyst and the standards preparation. The same analyst, analytical reagents, and analytical system shall be used both for compliance samples and the EPA audit sample. If this condition is met, auditing of subsequent compliance analyses for the same enforcement agency within 30 days is not required. An audit sample set may not be used to validate different sets of compliance samples under the jurisdiction of different enforcement agencies, unless prior arrangements are made with both enforcement agencies.

6.3.2 Audit Samples. Audit Sample Availability. Audit samples will be supplied only to enforcement agencies for compliance tests. The availability of audit samples may be obtained by writing: Source Test Audit Coordinator (STAC) (MD–77B), Quality Assurance Division, Atmospheric Research and Exposure Assessment Laboratory, U.S. Environmental Protection Agency, Research Triangle Park, NC 27711 or by calling the STAC at (919) 541–7834. The request for the audit sample must be made at least 30 days prior to the scheduled compliance sample analysis.

6.3.3 Audit Results. Calculate the audit sample concentration according to the calculation procedure described in the audit instructions included with the audit sample. Fill in the audit sample concentration and the analyst's name on the audit response form included with the audit instructions. Send one copy to the EPA Regional Office or the appropriate enforcement agency, and a second copy to the STAC. The EPA Regional Office or the appropriate enforcement agency will report the results of the audit to the laboratory being audited. Include this response with the results of the compliance samples in relevant reports to the EPA Regional Office or the appropriate enforcement agency.

7. Calibration and Standardization

7.1 FIA Calibration and Linearity Check. Make necessary adjustments to the air and fuel supplies for the FIA and ignite the burner. Allow the FIA to warm up for the period recommended by the manufacturer. Inject a calibration gas into the measurement system and adjust the back-pressure regulator to the value required to achieve the flow rates specified by the manufacturer. Inject the zero-and the high-range calibration gases and adjust the analyzer calibration to provide the proper responses. Inject the low-and mid-range gases and record the responses of the measurement system. The calibration and linearity of the system are acceptable if the responses for all four gases are within 5 percent of the respective gas values. If the performance of the system is not acceptable, repair or adjust the system and repeat the linearity check. Conduct a calibration and linearity check after assembling the analysis system and after a major change is made to the system. A calibration curve consisting of zero gas and two calibration levels must be performed at the beginning and end of each batch of samples.

7.2 Systems Drift Checks. After each sample, repeat the system calibration checks in section 7.1 before any adjustments to the FIA or measurement system are made. If the zero or calibration drift exceeds ±3 percent of the span value, discard the result and repeat the analysis. Alternatively, recalibrate the FIA as in section 7.1 and report the results using both sets of calibration data (i.e., data determined prior to the test period and data determined following the test period). The data that results in the lowest CE value shall be reported as the results for the test run.

8. Procedures

8.1 Determination of Liquid Input Weight

8.1.1 Weight Difference. Determine the amount of material introduced to the process as the weight difference of the feed material before and after each sampling run. In determining the total VOC containing liquid usage, account for: (a) The initial (beginning) VOC containing liquid mixture; (b) any solvent added during the test run; (c) any coating added during the test run; and (d) any residual VOC containing liquid mixture remaining at the end of the sample run.

8.1.1.1 Identify all points where VOC containing liquids are introduced to the process. To obtain an accurate measurement of VOC containing liquids, start with an empty fountain (if applicable). After completing the run, drain the liquid in the fountain back into the liquid drum (if possible), and weigh the drum again. Weigh the VOC containing liquids to ±0.5 percent of the total weight (full) or ±1.0 percent of the total weight of VOC containing liquid used during the sample run, whichever is less. If the residual liquid cannot be returned to the drum, drain the fountain into a preweighed empty drum to determine the final weight of the liquid.

8.1.1.2 If it is not possible to measure a single representative mixture, then weigh the various components separately (e.g., if solvent is added during the sampling run, weigh the solvent before it is added to the mixture). If a fresh drum of VOC containing liquid is needed during the run, then weigh both the empty drum and fresh drum.

8.1.2 Volume Measurement (Alternative). If direct weight measurements are not feasible, the tester may use volume meters and flow rate meters (and density measurements) to determine the weight of liquids used if it can be demonstrated that the technique produces results equivalent to the direct weight measurements. If a single representative mixture cannot be

measured, measure the components separately.

8.2 Determination of VOC Content in Input Liquids

8.2.1 Collection of Liquid Samples.

8.2.1.1 Collect a 1-pint or larger sample of the VOC containing liquid mixture at each application location at the beginning and end of each test run. A separate sample should be taken of each VOC containing liquid added to the application mixture during the test run. If a fresh drum is needed during the sampling run, then obtain a sample from the fresh drum.

8.2.1.2 When collecting the sample, ground the sample container to the coating drum. Fill the sample container as close to the rim as possible to minimize the amount of headspace.

8.2.1.3 After the sample is collected, seal the container so the sample cannot leak out or evaporate.

8.2.1.4 Label the container to identify clearly the contents.

8.2.2 Distillation of VOC.

8.2.2.1 Assemble the rotary evaporator as shown in Figure 204F–1.

8.2.2.2 Leak check the rotary evaporation system by aspirating a vacuum of approximately 20 mm Hg from absolute. Close up the system and monitor the vacuum for approximately 1 minute. If the vacuum falls more than 25 mm Hg in 1 minute, repair leaks and repeat. Turn off the aspirator and vent vacuum.

8.2.2.3 Deposit approximately 20 ml of sample (inks, paints, etc.) into the rotary evaporation distillation flask.

8.2.2.4 Install the distillation flask on the rotary evaporator.

8.2.2.5 Immerse the distillate collection flask into the ice water bath.

8.2.2.6 Start rotating the distillation flask at a speed of approximately 30 rpm.

8.2.2.7 Begin heating the vessel at a rate of 2 to 3°C per minute.

8.2.2.8 After the hot oil bath has reached a temperature of 50°C or pressure is evident on the mercury manometer, turn on the aspirator and gradually apply a vacuum to the evaporator to within 20 mm Hg of absolute. Care should be taken to prevent material burping from the distillation flask.

8.2.2.9 Continue heating until a temperature of 110°C is achieved and maintain this temperature for at least 2 minutes, or until the sample has dried in the distillation flask.

8.2.2.10 Slowly introduce the N_2 sweep gas through the purge tube and into the distillation flask, taking care to maintain a vacuum of approximately 400-mm Hg from absolute.

8.2.2.11 Continue sweeping the remaining solvent VOC from the distillation flask and condenser assembly for 2 minutes, or until all traces of condensed solvent are gone from the vessel. Some distillate may remain in the still head. This will not affect solvent recovery ratios.

8.2.2.12 Release the vacuum, disassemble the apparatus and transfer the distillate to a labeled, sealed vial.

8.2.3 Preparation of VOC standard bag sample.

8.2.3.1 Assemble the bag sample generation system as shown in Figure 204F–2 and bring the water bath up to near boiling temperature.

8.2.3.2 Inflate the Tedlar bag and perform a leak check on the bag.

8.2.3.3 Evacuate the bag and close the bag inlet valve.

8.2.3.4 Record the current barometric pressure.

8.2.3.5 Record the starting reading on the dry gas meter, open the bag inlet valve, and start the dilution zero air flowing into the Tedlar bag at approximately 2 liters per minute.

8.2.3.6 The bag sample VOC concentration should be similar to the gaseous VOC concentration measured in the gas streams. The amount of liquid VOC required can be approximated using equations in section 9.2. Using Equation 204F–4, calculate C_{VOC} by assuming RF is 1.0 and selecting the desired gas concentration in terms of propane, C_{C3}. Assuming B_V is 20 liters, M_L, the approximate amount of liquid to be used to prepare the bag gas sample, can be calculated using Equation 204F–2.

8.2.3.7 Quickly withdraw an aliquot of the approximate amount calculated in section 8.2.3.6 from the distillate vial with the microliter syringe and record its weight from the analytical balance to the nearest 0.01 mg.

8.2.3.8 Inject the contents of the syringe through the septum of the volatilization vessel into the glass wool inside the vessel.

8.2.3.9 Reweigh and record the tare weight of the now empty syringe.

8.2.3.10 Record the pressure and temperature of the dilution gas as it is passed through the dry gas meter.

8.2.3.11 After approximately 20 liters of dilution gas have passed into the Tedlar bag, close the valve to the dilution air source and record the exact final reading on the dry gas meter.

8.2.3.12 The gas bag is then analyzed by FIA within 1 hour of bag preparation in accordance with the procedure in section 8.2.4.

8.2.4 Determination of VOC response factor.

8.2.4.1 Start up the FIA instrument using the same settings as used for the gaseous VOC measurements.

8.2.4.2 Perform the FIA analyzer calibration and linearity checks according to the procedure in section 7.1. Record the responses to each of the calibration gases and the back-pressure setting of the FIA.

8.2.4.3 Connect the Tedlar bag sample to the FIA sample inlet and record the bag concentration in terms of propane. Continue the analyses until a steady reading is obtained for at least 30 seconds. Record the final reading and calculate the RF.

8.2.5 Determination of coating VOC content as VOC (V_{IJ}).

8.2.5.1 Determine the VOC content of the coatings used in the process using EPA Method 24 or 24A as applicable.

9. Data Analysis and Calculations

9.1. Nomenclature.

B_V=Volume of bag sample volume, liters.

C_{C3}=Concentration of bag sample as propane, mg/liter.

C_{VOC}=Concentration of bag sample as VOC, mg/liter.

K=0.00183 mg propane/(liter-ppm propane)

L=Total VOC content of liquid input, kg propane.

M_L=Mass of VOC liquid injected into the bag, mg.

M_V=Volume of gas measured by DGM, liters.

P_M=Absolute DGM gas pressure, mm Hg.

P_{STD}=Standard absolute pressure, 760 mm Hg.

R_{C3}=FIA reading for bag gas sample, ppm propane.

RF=Response factor for VOC in liquid, weight VOC/weight propane.

RF_J=Response factor for VOC in liquid J, weight VOC/weight propane.

T_M=DGM temperature, °K.

T_{STD}=Standard absolute temperature, 293°K.

V_{IJ}=Initial VOC weight fraction of VOC liquid J.

V_{FJ}=Final VOC weight fraction of VOC liquid J.

V_{AJ}=VOC weight fraction of VOC liquid J added during the run.

W_{IJ}=Weight of VOC containing liquid J at beginning of run, kg.

W_{FJ}=Weight of VOC containing liquid J at end of run, kg.

W_{AJ}=Weight of VOC containing liquid J added during the run, kg.

9.2 Calculations.

9.2.1 Bag sample volume.

$$B_V = \frac{M_V T_{STD} P_M}{T_M P_{STD}} \qquad \text{Eq. 204F-1}$$

9.2.2 Bag sample VOC concentration.

$$C_{VOC} = \frac{M_L}{B_V} \qquad \text{Eq. 204F-2}$$

9.2.3 Bag sample VOC concentration as propane.

$$C_{C_3} = R_{C_3} K \qquad \text{Eq. 204F-3}$$

9.2.4 Response Factor.

$$RF = \frac{C_{VOC}}{C_{C_3}} \qquad \text{Eq. 204F-4}$$

9.2.5 Total VOC Content of the Input VOC Containing Liquid.

$$L = \sum_{j=1}^{n} \frac{V_{rj} W_{rj}}{RF_J} - \sum_{j=1}^{n} \frac{V_{Fj} W_{Fj}}{RF_J} + \sum_{j=1}^{n} \frac{V_{Aj} W_{Aj}}{RF_J} \qquad \text{Eq. 204F-5}$$

10. Diagrams

BILLING CODE 6560–50–P

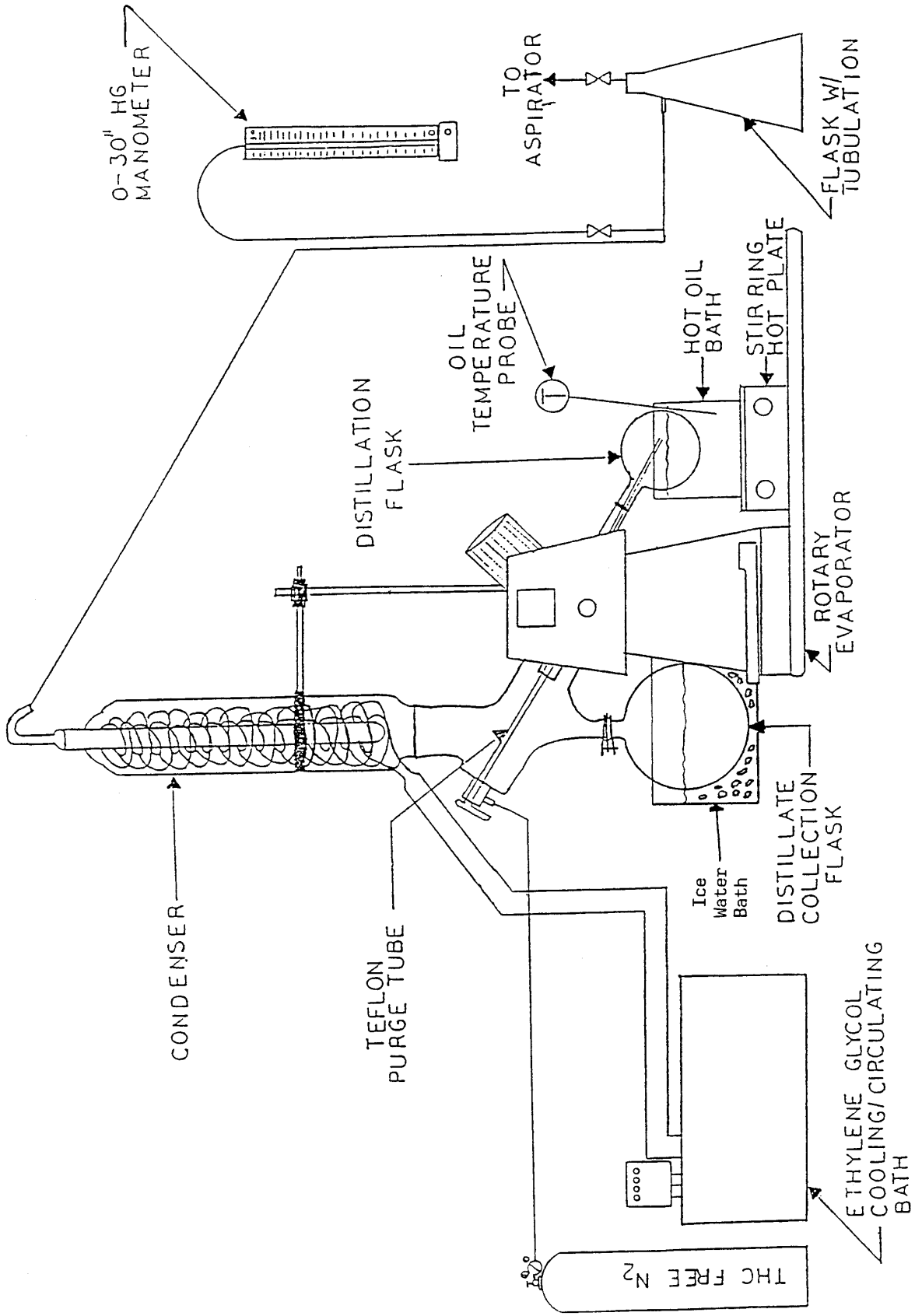

Figure 204F-1. VOC distillation system apparatus.

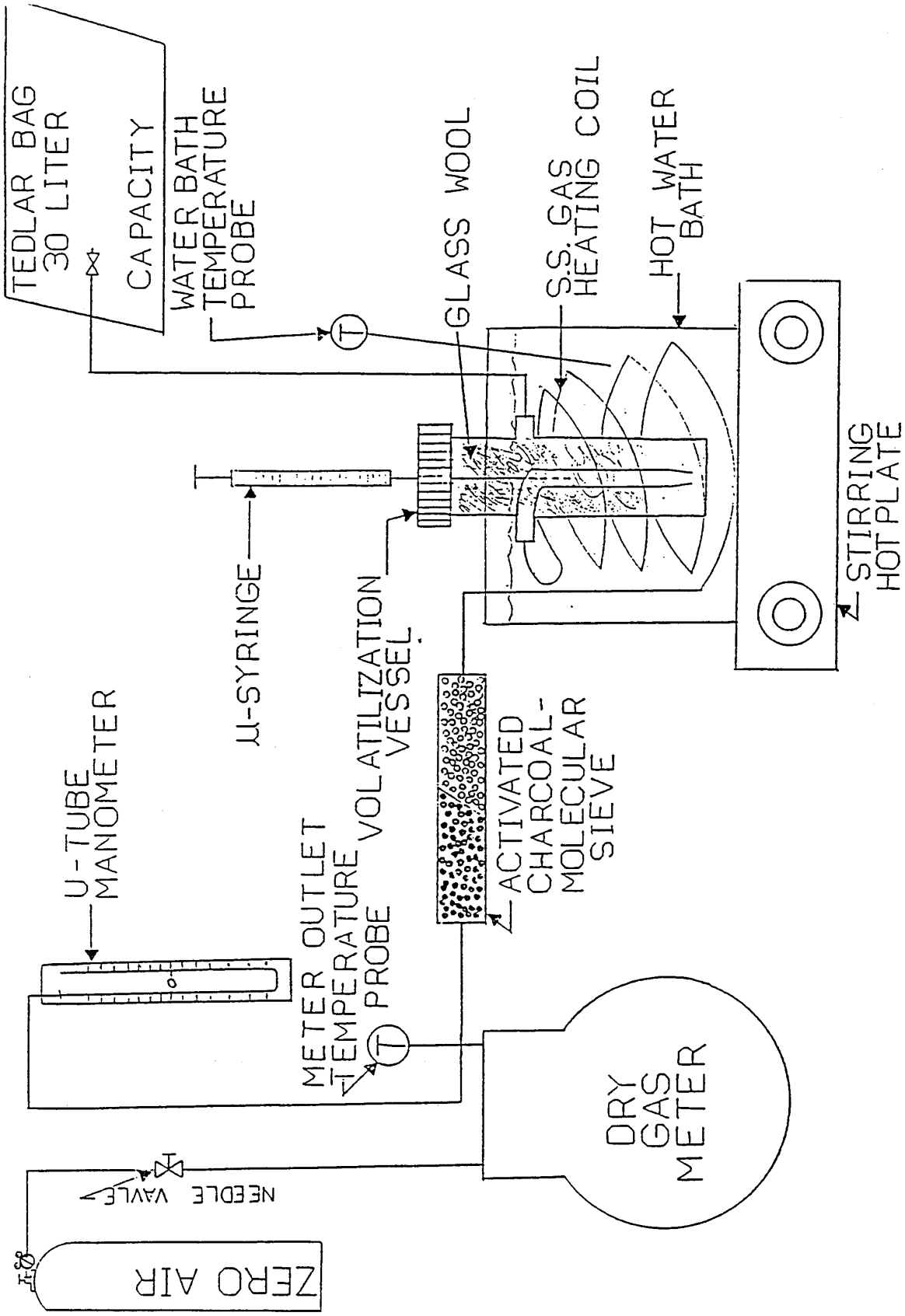

Figure 204F-2. Tedlar gas bag generation system apparatus.

[FR Doc. 97–15374 Filed 6–13–97; 8:45 am]

BILLING CODE 6560–50–C

ENVIRONMENTAL PROTECTION AGENCY

40 CFR Part 52

[SC33–1–9714a; FRL–5840–5]

Approval and Promulgation of State Implementation Plan, South Carolina: Adoption of General Conformity Regulations

AGENCY: Environmental Protection Agency (EPA).

ACTION: Direct final rule.

SUMMARY: On November 8, 1996, the South Carolina Department of Health and Environmental Control (SCDHEC) submitted revisions to the U.S. Environmental Protection Agency (EPA) concerning the adoption of general conformity rules into the South Carolina State Implementation Plan (SIP). Since general conformity rules are required by Section 176 of the Clean Air Act (CAA) in all nonattainment and maintenance areas, these revisions are being incorporated into the Federally approved South Carolina SIP.

DATES: This final rule is effective August 15, 1997 unless adverse or critical comments are received by July 16, 1997. If the effective date is delayed, timely notice will be published in the **Federal Register**.

ADDRESSES: Written comments on this action should be addressed to Mr. Gregory O. Crawford at the EPA Regional Office listed below.

Copies of the documents relative to this action are available for public inspection during normal business hours at the following locations. The interested persons wanting to examine these documents should make an appointment with the appropriate office at least 24 hours before the visiting day.

Air and Radiation Docket and Information Center (Air Docket 6102), U.S. Environmental Protection Agency, 401 M Street, SW, Washington DC 20460

Environmental Protection Agency, Region 4, Air Planning Branch, 61 Forsyth Street, Atlanta, Georgia 30303, (404) 562–9042

South Carolina Department of Health and Environmental Control, 2600 Bull Street, Columbia, South Carolina, 29201, (803) 734–4750.

FOR FURTHER INFORMATION CONTACT: Gregory O. Crawford, Regulatory Planning Section, Air Planning Branch, Air, Pesticides & Toxics Management Division, Region 4 Environmental Protection Agency, 61 Forsyth Street, Atlanta, Georgia, 30303. The telephone number is (404) 562–9042.

SUPPLEMENTARY INFORMATION: On November 6, 1991, EPA designated Cherokee County, South Carolina, as a nonattainment area for the ozone National Ambient Air Quality Standard (NAAQS). Cherokee County was officially redesignated to attainment and classified as a maintenance area on February 16, 1993. In the November 30, 1993, **Federal Register** (58 FR 63214), EPA issued a final rule establishing criteria and procedures for determining conformity of general Federal actions to state or Federal implementation plans. Because Cherokee County is a maintenance area, the general conformity rule is applicable. Before any industrial development requiring approval from a Federal agency can occur, a determination must be reached that such action, when taken, will conform to the South Carolina SIP to maintain the NAAQS for ozone. The State was therefore required to revise their SIP, to include general conformity criteria and procedures that are consistent with those in the Federal rule. On September 27, 1996, SCDHEC formally adopted criteria and procedures for demonstrating and assuring the ''Conformity of General Federal Actions to the South Carolina Air Quality Implementation Plan.'' These regulations were submitted to EPA on November 8, 1996 for adoption into the Federally enforceable state implementation plan.

EPA has evaluated this SIP revision and has determined that the SCDHEC has fully adopted by reference, the provisions of the Federal general conformity rules specified in 40 CFR part 51, subpart W. Therefore, EPA believes that the State has met all applicable requirements, and is approving the SIP revision concerning the adoption of the general conformity regulations.

Final Action

EPA is approving South Carolina's general conformity rule because it meets the Agency's requirements. The EPA is publishing this action without prior proposal because the Agency views this as a noncontroversial amendment and anticipates no adverse comments. However, in a separate document in this **Federal Register** publication, the EPA is proposing to approve the SIP revision should adverse or critical comments be filed. This action will be effective August 15, 1997 unless, by July 16, 1997 adverse or critical comments are received.

If the EPA receives such comments, this action will be withdrawn before the effective date by publishing a subsequent document that will withdraw the final action. All public comments received will then be addressed in a subsequent final rule based on this action serving as a proposed rule. The EPA will not institute a second comment period on this action. Any parties interested in commenting on this action should do so at this time. If no such comments are received, the public is advised that this action will be effective August 15, 1997.

The Agency has reviewed this request for revision of the Federally-approved SIP for conformance with the provisions of the 1990 Amendments enacted on November 15, 1990. The Agency has determined that this action conforms with those requirements.

Nothing in this action shall be construed as permitting or allowing or establishing a precedent for any future request for a revision to any SIP. Each request for revision to the SIP shall be considered separately in light of specific technical, economic, and environmental factors and in relation to relevant statutory and regulatory requirements.

I. Administrative Requirements

A. Executive Order 12866

This action has been classified as a Table 3 action for signature by the Regional Administrator under the procedures published in the **Federal Register** on January 19, 1989 (54 FR 2214–2225), as revised by a July 10, 1995 memorandum from Mary Nichols, Assistant Administrator for Air and Radiation. The Office of Management and Budget (OMB) has exempted this regulatory action from E.O. 12866 review.

B. Regulatory Flexibility Act

Under the Regulatory Flexibility Act, 5 U.S.C. 600 *et. seq.*, EPA must prepare a regulatory flexibility analysis assessing the impact of any proposed or final rule on small entities. 5 U.S.C. 603 and 604. Alternatively, EPA may certify that the rule will not have a significant impact on a substantial number of small entities. Small entities include small businesses, small not-for-profit enterprises, and government entities with jurisdiction over populations of less than 50,000.

SIP approvals under section 110 and subchapter I, part D of the CAA do not create any new requirements, but simply approve requirements that the State is already imposing. Therefore, because the Federal SIP approval does not impose any new requirements, I certify that it does not have a significant impact on any small entities affected. Moreover, due to the nature of the Federal-state relationship under the

CAA, preparation of a flexibility analysis would constitute Federal inquiry into the economic reasonableness of state action. The CAA forbids EPA to base its actions concerning SIPs on such grounds. *Union Electric Co.* v. *U.S.* EPA, 427 U.S. 246, 256–66 1976; 42 U.S.C. 7410(a)(2) and 7410 (k)(3).

C. Unfunded Mandates

Under Section 202 of the Unfunded Mandates Reform Act of 1995 (''Unfunded Mandates Act''), signed into law on March 22, 1995, EPA must prepare a budgetary impact statement to accompany any proposed or final rules that include a Federal mandate that may result in estimated costs to State, Local, or tribal governments in the aggregate; or to the private sector, of $100 million or more. Under Section 205, EPA must select the most cost-effective and least burdensome alternative that achieves the objectives of the rule and is consistent with statutory requirements. Section 203 requires EPA to establish a plan for informing and advising any small governments that may be significantly or uniquely impacted by the rule.

EPA has determined that the approval action promulgated does not include a Federal mandate that may result in estimated costs of $100 million or more to either State, Local, or tribal governments in the aggregate, or to the private sector. This Federal action approves pre-existing requirements under State or local law, and imposes no new federal requirements. Accordingly, no additional costs to State, Local, or tribal governments, or to the private sector, result from this action.

D. Submission to Congress and the General Accounting Office

Under 5 U.S.C. 801(a)(1)(A) as added by the Small Business Regulatory Enforcement Fairness Act of 1996, EPA submitted a report containing this rule and other required information to the U.S. Senate, the U.S. House of Representatives and the Comptroller General of the General Accounting Office prior to publication of the rule in today's **Federal Register**. This rule is not a ''major rule'' as defined by 5 U.S.C. 804(2).

E. Petitions for Judicial Review

Under section 307(b)(1) of the Clean Air Act, petitions for judicial review of this action must be filed in the United States Court of Appeals for the appropriate circuit by August 15, 1997. Filing a petition for reconsideration by the Administrator of this final rule does not affect the finality of this rule for the purposes of judicial review nor does it extend the time within which a petition for judicial review may be filed, and shall not postpone the effectiveness of such rule or action. This action may not be challenged later in the proceedings to enforce its requirements. (See section 307(b)(2).)

List of Subjects in 40 CFR Part 52

Environmental protection, Air pollution control, Carbon monoxide, Hydrocarbons, Intergovernmental relations, Lead, Nitrogen dioxide, Ozone, Particulate matter, Reporting and record keeping requirements, Sulfur oxides.

Dated: May 19, 1997.

A. Stanley Meiburg,

Acting Regional Administrator.

Part 52 of chapter I, title 40, Code of Federal Regulations, is amended as follows:

PART 52—[AMENDED]

1. The authority citation for part 52 continues to read as follows:

Authority: 42.U.S.C. 7401–7671q.

Subpart PP—South Carolina

2. Section 52.2133 is added to read as follows:

§ 52.2133 General conformity.

The General Conformity regulations adopted into the South Carolina State Implementation Plan which were submitted on November 8, 1996. South Carolina incorporated by reference regulations 40 CFR part 51, subpart W—determining conformity of General Federal Actions to State or Federal Implementation Plans.

[FR Doc. 97–15732 Filed 6–13–97; 8:45 am]

BILLING CODE 6560–50–P

DEPARTMENT OF TRANSPORTATION

National Highway Traffic Safety Administration

49 CFR Part 571

[Docket No. 96–52; Notice 2]

RIN 2127–AF86

Federal Motor Vehicle Safety Standards; Controls and Displays

AGENCY: National Highway Traffic Safety Administration (NHTSA), Transportation.

ACTION: Final rule.

SUMMARY: In this document, NHTSA amends the Federal Motor Vehicle Safety Standard on motor vehicle controls and displays by removing two tables and certain regulatory text, all of which apply to motor vehicles manufactured before September 1, 1989. The agency makes no other changes to the Standard. This rulemaking action is undertaken as part of NHTSA's efforts to implement the President's Regulatory Reinvention Initiative to remove unnecessary regulatory language.

DATES: *Effective date:* This final rule is effective July 31, 1997.

Petitions for reconsideration: Any petitions for reconsideration of this final rule must be received by NHTSA no later than July 31, 1997.

ADDRESSES: Any petition for reconsideration of this final rule should refer to the docket and notice number set forth in the heading and be submitted to: Administrator, NHTSA, 400 Seventh Street, S.W., Washington, D.C. 20590.

FOR FURTHER INFORMATION CONTACT:

For technical issues: Mr. Chris Flanigan, Office of Crash Avoidance Standards, NPS–21. Mr. Flanigan's telephone number is (202) 366–4918 and his FAX number is (202) 366–4329.

For legal issues: Ms. Dorothy Nakama, Office of Chief Counsel, NCC–20, telephone (202) 366–2992, FAX (202) 366–3820.

Both may be reached at the National Highway Traffic Safety Administration, 400 Seventh Street, S.W., Washington, D.C. 20590.

SUPPLEMENTARY INFORMATION:

President's Regulatory Reinvention Initiative

Pursuant to the March 4, 1995 directive ''Regulatory Reinvention Initiative,'' from the President to the heads of departments and agencies, NHTSA undertook a review of its regulations and directives. During the course of this review, NHTSA identified regulations that it could propose to eliminate as unnecessary or to amend to improve their comprehensibility, application, or appropriateness. Among these regulations is Federal Motor Vehicle Safety Standard No. 101, Controls and displays (49 CFR 571.101).

Standard No. 101

Standard No. 101 was issued in 1967 (32 FR 2408) as one of the initial Federal Motor Vehicle Safety Standards (FMVSS's). The standard applies to passenger cars, multipurpose passenger vehicles (MPVs), trucks, and buses. Its purpose is to assure the accessibility and visibility of motor vehicle controls and displays under daylight and nighttime conditions. The standard is

intended to reduce the risk of safety hazards caused by the diversion of the driver's attention from the driving task in order to locate the desired control or display, and by mistakes in selecting controls. The standard also seeks to ensure that a driver restrained by a seat belt can reach certain controls.

Standard No. 101 specifies location requirements (S5.1), identification requirements (S5.2), and illumination requirements (S5.3). It specifies that the controls and displays must be accessible and visible to a driver restrained in accordance with Standard No. 208, *Occupant crash protection* (S6). In addition, Table 1 ''Identification and Illumination of Controls'' and Table 2 ''Identification and Illumination of Displays'' further specify which controls and displays are subject to the identification requirements, and how they are to be identified and illuminated.

Notice of Proposed Rulemaking

In a **Federal Register** document published on May 30, 1996 (61 FR 27039) NHTSA proposed five alternatives for changes to the Standard and sought public comment on each proposal. The proposals were: (1) Rescind the standard; (2) regulate only those controls and displays related to motor vehicle safety; (3) regulate only those controls and displays required by other Federal Motor Vehicle Safety Standards; (4) consolidate all control and display requirements into Standard No. 101 and (5) permit International Standards Organization (ISO) symbols on some or all controls and displays requiring identification. NHTSA identified none of the five proposals as the preferred agency position.

NHTSA stated that if it decides not to rescind Standard No. 101, it may decide to adopt one or more of the other proposals. Since some of the proposals, (for example, Proposals Three and Five) address different matters in Standard No. 101, NHTSA stated the proposals are not mutually exclusive. NHTSA stated that due to the relative simplicity of the proposals, it would propose no regulatory language to implement the proposals.

1. Proposal One—Rescind Standard No. 101

In the NPRM, NHTSA tentatively concluded that even if Standard No. 101 were rescinded, manufacturers would continue to provide appropriate means of identifying and illuminating controls and displays and place those controls and displays in accessible locations. Except for some required controls and displays listed in other standards, there is none specifically required by Standard No. 101. The standard only addresses the visibility, access and illumination of controls and displays *if* they are provided. NHTSA stated that while the initial premise for the standard was that these aspects need to be regulated for minimizing driver distractions, the controls and displays have in effect become an industry practice that may not require continued Federal regulation. NHTSA stated its belief that market forces will ensure manufacturers continue the currently specified practices, citing the changing location of the horn button as an example.

NHTSA noted that if Standard No. 101 were rescinded, some States might adopt regulations requiring controls and displays or regulating their identification, illumination or accessibility, which would subject manufacturers to multiple, conflicting rules and increase vehicle production costs. NHTSA further noted that were the States to adopt such regulations, there would not be any express preemption under 49 U.S.C. section 30103(b), which preempts State standards if they conflict with an existing Federal standard.

2. Proposal Two—Regulate Only Those Controls and Displays Related to Motor Vehicle Safety

The second proposal was to update Standard No. 101 by removing obsolete provisions and regulating only those controls and displays related to safety. Standard No. 101 includes references to vehicles manufactured before September 1, 1987 and September 1, 1989. NHTSA proposed to remove all references to vehicles manufactured before September 1, 1987 and September 1, 1989.

After references to vehicles manufactured before September 1, 1989 are removed, NHTSA proposed that S3, *Application,* of Standard No. 101 be shortened to state: ''This standard applies to passenger cars, multipurpose passenger vehicles, trucks, and buses.'' NHTSA further proposed to amend S5.(b), and S5.3.3(d), by removing references to vehicles manufactured before September 1, 1987 and September 1, 1989. Finally, NHTSA proposed to remove Table 1(a) ''Identification and Illumination of Controls'' and Table 2(a) ''Identification and Illumination of Internal Displays,'' since each table applies to vehicles manufactured before September 1, 1987.

Additionally, the standard currently regulates aspects of controls and displays not required to be on vehicles and that may not have a direct effect on motor vehicle safety. Under Proposal Two, NHTSA proposed to amend Standard No. 101 so that it would regulate only controls and displays that directly bear on the need for motor vehicle safety, whether they are specified in another Federal Motor Vehicle Safety Standard or not.

Accordingly, NHTSA proposed to remove the following controls from Table 1 ''Identification and Illumination of Controls'': the heating and air conditioning control; the hand throttle; the heating and air conditioning fan control; and the manual choke. It also proposed to remove the coolant temperature display from Table 2 ''Identification and Illumination of Displays.'' NHTSA cited as examples of displays that would continue to be regulated the seat belt and turn signal displays (both specified in other safety standards) and the fuel level display and speedometer (if they are provided), neither of which is specified in a safety standard.

3. Proposal Three—Regulate Only Controls and Displays Required by Other Federal Motor Vehicle Safety Standards

NHTSA's proposed changes under Proposal Three were similar to Proposal Two, but would have limited Standard No. 101 to regulating controls and displays specified in another safety standard. Thus, under proposal three, the following controls presently listed in Table 1 ''Identification and Illumination of Controls'' were proposed to be removed: horn; heating and/or air conditioning fan; rear window defrosting and defogging system; manual choke; engine start; engine stop; hand throttle; automatic vehicle speed; and heating and air conditioning system.

The following displays specified in Table 2 ''Identification and Illumination of Displays'' were proposed to be removed: fuel level telltale and gauge; oil pressure telltale and gauge; coolant temperature telltale and gauge; electrical charge telltale and gauge; the speedometer; and the odometer.

NHTSA's rationale was that if enacted, Proposal Three would not affect the placement in vehicles of controls and displays no longer specified in Standard No. 101. NHTSA stated market forces (in the form of customer demand) would be highly likely to ensure that vehicle manufacturers would continue to provide appropriately identified, illuminated, and located controls and displays.

4. Proposal Four—Consolidate in Standard No. 101 Controls and Displays Specified in Other Standards

Under Proposal Four, NHTSA proposed to include in Standard No. 101 reference to the controls and displays specified in other standards; today only Standard No. 208, *Occupant crash protection,* has such requirements. At present, Standard No. 101 does not include certain controls or displays specified in Standard No. 208, *Occupant crash protection.*

Specifically, NHTSA proposed to incorporate the readiness indicator specified in Standard No. 208 into Standard No. 101 and to specify the means of identifying the indicator and whether it must be illuminated. To keep Standard No. 101 consistent with requirements in other Federal motor vehicle safety standards, NHTSA proposed to amend Table 2 ''Identification and Illumination of Displays'' by specifying the air bag readiness indicator. NHTSA proposed to amend Column 3 (''Identifying Words or Abbreviation'') to indicate that the air bag readiness indicator must be identified with the words ''AIR BAG'', and to amend Column 4 to indicate that the air bag readiness indicator display must be illuminated. The agency did not propose to specify a color (Column 2) or an identifying symbol (Column 4) for the air bag readiness indicator.

NHTSA also proposed to include in Standard No. 101, the air bag manual cutoff device specified in Standard No. 208 at S4.5.4, *Passenger Air Bag Manual Cutoff Device.* Paragraph S4.5.4.2 describes the device as being separate from the vehicle ignition switch and operable by means of the ignition key for the vehicle. Paragraph S4.5.4.3 specifies that a telltale light on the dashboard shall be clearly visible from all front seating positions and shall be illuminated whenever the passenger air bag is deactivated. Paragraph S4.5.4.3 further requires the air bag manual cut off device's telltale to be yellow, identified with ''AIR BAG OFF,'' and illuminated the entire time that the passenger air bag is deactivated. The air bag manual cutoff device telltale is further not to be combined with the air bag readiness indicator.

NHTSA proposed to transfer the specifications for the air bag manual cutoff device telltale from Standard No. 208 to Standard No. 101. NHTSA proposed to include the air bag manual cutoff telltale in Table 2 (''Identification and Illumination of Displays'') of Standard No. 101. NHTSA did not propose to specify a symbol for the device in Table 2. The agency proposed to amend the column on illumination to indicate, by stating ''yes'', that illumination is required. NHTSA proposed to add a footnote indicating the telltale is to be illuminated only when the air bag manual cutoff device is activated.

NHTSA further proposed that the air bag manual cutoff device be described in Table 1 (''Identification and Illumination of Controls'') of Standard No. 101. NHTSA proposed that the device be identified in Column 2 (''Identifying Words or Abbreviation'') with the words ''Air Bag Cutoff.'' NHTSA did not propose to specify an identifying symbol or to specify illumination for the air bag manual cutoff device.

5. Proposal Five—Permit ISO Symbols to Identify Controls and Displays

Many of the symbols specified in Tables 1 and 2 of Standard No. 101 are based on symbols developed by the International Standards Organization (ISO). In the interests of international harmonization of vehicle safety standards, under Proposal Five, NHTSA proposed to permit any ISO symbol to be used to identify a control or display. NHTSA proposed to require that each ISO symbol used be described in the owner's manual. NHTSA stated that the description may be necessary to ensure that the driver understands the meaning of the symbol.

Public Comments

In response to the NPRM, NHTSA received comments from the following ten commenters: Advocates for Highway and Auto Safety (Advocates), American Automobile Manufacturers Association (AAMA), Center for Auto Safety (CAS), Chrysler, Coalition of Small Volume Automobile Manufacturers (COSVAM), Mitsubishi, National Automobile Dealers Association (NADA), Toyota, Truck Manufacturers Association (TMA), and Volkswagen. With a few exceptions, the commenters generally raised objections to all five proposals raised in the NPRM. The commenters offered the following reasons for their opposition.

Necessity for the Rulemaking

Two commenters expressed skepticism about the need for proposed changes to Standard No. 101 as described in the NPRM. Advocates stated that they did not understand why the rulemaking was being conducted, stating that NHTSA has shown no ''pressing safety need being unmet by the current standard.'' Advocates urged NHTSA not to disturb the regulatory status quo with a ''proposal that appears to be a frivolous use of agency resources.''

CAS described Standard No. 101 as having ''30 years of success'' and NHTSA's invoking the Regulatory Reinvention Initiative to rescind the standard as ''misplaced.'' CAS further stated that NHTSA itself acknowledges Standard No. 101 imposes little cost on industry, and NHTSA has not shown that eliminating the Standard ''would not open the door for the introduction of irregular and inadequate designs and configurations of instrument panel controls and displays.''

Public Comments on Proposal One—Rescind Standard No. 101

No commenter supported rescission of Standard No. 101. The most often cited reason for opposing rescission was that a Federal Motor Vehicle Safety Standard on controls and displays was needed to preempt potentially conflicting and confusing State requirements. Advocates viewed Proposal One as having ''no merit whatever'' and particularly objected to NHTSA's reliance on ''market forces'' having a role in maintaining controls and displays. Advocates cited a public comment by General Motors (on another NHTSA matter) for the proposition that State regulation (in the absence of a Federal standard) is ''undesirable.'' Chrysler stated it was desirable to have a certain level of control and display consistency in the national fleet. Toyota stated that its vehicle production costs would increase if it had to meet differing state requirements.

TMA did not support rescission, asserting that in the future, numerous intelligent transportation systems (ITS) will likely be introduced, and ''human factors considerations'' may mean ITS-based collision warning/avoidance systems would require more standardization. The ITS may incorporate a large number of automatic collision avoidance systems, such as side, frontal, and lane change/merge with their accompanying in-vehicle warnings and sensors, which could confuse vehicle operators. Standardized controls and displays could minimize operator confusion. CAS opposed Proposal One stating that no legally sufficient rationale for rescission had been articulated in the notice.

Public Comments on Proposal Two—Regulate Only Those Controls and Displays Related to Motor Vehicle Safety

NHTSA received mixed comments on this proposal. Among those writing in favor of Proposal Two were Volkswagen, TMA and AAMA. AAMA

stated that even if NHTSA were to no longer regulate controls and displays not related to motor vehicle safety, manufacturers would continue to provide identification, illumination, and accessible locations for controls and displays.

Many others, however, objected to this proposal because NHTSA did not specify what it meant by a control or display with no bearing on safety. Advocates asserted NHTSA has the burden of defining which controls and displays are ''safety-related'' and that to make ''conclusory opinions'' about which controls and displays can be removed from Standard No. 101 is ''capricious'' and ''a violation of agency responsibilities.'' Advocates provided an example of when a display NHTSA had proposed for removal (the temperature display) may have a bearing on motor vehicle safety.

CAS opposed Proposal Two stating that at a minimum, NHTSA should have explained ''what attributes it believes distinguish a vehicle control and display which directly affects or bears on safety from one which does not.'' CAS also raised objections to specific controls and displays NHTSA identified for removal under Proposal Two. Toyota stated that since it could not determine which controls and displays ''directly bear on the need for motor vehicle safety,'' it would withhold comment.

Under Proposal Two, NHTSA also proposed to remove outdated tables and regulatory provisions from Standard No. 101, referring to motor vehicles manufactured before September 1, 1987 and September 1, 1989. No commenter opposed removing the outdated provisions.

Public Comments on Proposal Three—Regulate Only Controls and Displays Required by Other FMVSS

NHTSA received various responses to this proposal. Among those writing in favor of Proposal Three were Volkswagen and AAMA. NADA stated that Standard No. 101 should serve as a ''consolidated reference'' to controls and displays regulated elsewhere. Advocates opposed Proposal Three, characterizing the proposal as ''a fundamental dereliction of agency obligations to protect and advance the safety of motor vehicle occupants.'' Toyota stated that it did not agree with Proposal Three since all controls and displays specified in the current standard are ''all equally important in maintaining motor vehicle safety.'' TMA opposed Proposal Three, stating that there may be a safety need to regulate controls and displays beyond those in the FMVSSs. CAS commented that although the criterion for selecting the controls and displays under Proposal Three was ''unambiguous,'' before it can remove ''critical'' controls and displays such as the horn, fuel level indicator, or speedometer from Standard No. 101, NHTSA should offer more than its boilerplate ''market forces'' assertions, and provide ''concrete evidence and data justifying the benefits of its proposed actions.''

Public Comments on Proposal Four—Consolidate in Standard No. 101 Controls and Displays Specified in Other Standards

Although NHTSA received mixed comments on this proposal, more commenters favored Proposal Four than any other proposal. Mitsubishi stated that controls and displays for safety devices in other standards (such as brakes and air bags) should not be included in Standard No. 101 to avoid redundancy and ''to make all the requirements easier to understand.'' Advocates, the AAMA, Chrysler, and TMA on the other hand, favored Proposal Four. Advocates stated it would ''improve comprehension of the requirements for the controls and displays by integrating specific FMVSS control/display requirements from other standards into No. 101.'' TMA stated that Proposal Four would be especially helpful to those who are not intimately familiar with the complete range of standards. CAS stated that it would reserve judgment on Proposal Four until it can review NHTSA's proposed regulatory text implementing Proposal Four.

As part of Proposal Four, NHTSA also proposed that certain controls and displays, presently specified in Standard No. 208, should instead be specified in Standard No. 101. Many commenters, including Advocates and Toyota, offered comments on attributes that the air bag readiness indicator display and air bag manual cutoff device should have, if they are specified in Standard No. 101.

Public Comments on Proposal Five—Permit ISO Symbols to Identify Controls and Displays

Although commenters addressed the issue of ISO standards in Standard No. 101, the broader issue of harmonizing the Standard with international standards was also addressed. As an example, Chrysler generally wrote in support of international harmonization of the FMVSSs by allowing use of ISO symbols. Volkswagen stated that NHTSA should permit ISO symbols to identify controls and displays for which requirements are prescribed in Standard No. 101. NADA stated that ISO symbols should be allowed ''whenever possible.''

AAMA supported Proposal Five, stating most ISO symbols are already permitted by Standard No. 101. AAMA further stated that symbols not specified in Standard No. 101 have been in U.S. vehicles for years and that the ''motoring public has been educated as to the meaning of these symbols.'' TMA stated that it supported Proposal Five for practical reasons, ''e.g., the difficulty in assuring that every custom truck configuration is matched to unique documentation, cannot support the requirement for each ISO symbol to be described in the owner's manual.''

CAS, on the other hand, urged NHTSA not to permit (presumably unfamiliar) ISO symbols because of potential adverse safety consequences if the driver is uncertain about the information the symbol is meant to convey. Advocates wrote that it ''strongly opposes'' Proposal Five, commenting that ''all three versions of rescission of the current requirements of No. 101 would open the door to the use of ISO symbols that NHTSA has already recognized as inadequate for motor vehicle safety.''

Both commenters who did not support the proposal to permit any International Standards Organization (ISO) symbol cited NHTSA's own past rulemakings, especially on the brake standard, to show NHTSA has in the past sometimes been reluctant to permit certain ISO symbols because it did not believe those symbols were intuitively evident.

Among the commenters writing on behalf of making Standard No. 101 harmonize with international standards was COSVAM. COSVAM asked NHTSA to add a new paragraph to Standard No. 101 that would state that ''compliance with ECE, EEC or Japanese requirements on the subject of controls and displays will be deemed to be compliance with FMVSS 101. Similarly, Toyota recommended that Standard No. 101 be revised to incorporate ISO 275 ''Road vehicles—symbols for controls, indicators, and tell-tales'' to be harmonized with the Japanese and European standards.

NHTSA Decision and Final Rule

The purpose of the President's Regulatory Reinvention Initiative was to have the Federal government take a careful look at its regulations to identify and remove any unnecessary provisions. In response to that Initiative, NHTSA examined Standard No. 101. NHTSA was concerned that Standard No. 101 might be imposing a needless regulatory burden on the public by regulating

aspects of motor vehicle design that were beyond what was needed to assure safety. To explore these concerns further, the agency proposed a number of alternative ways that might reduce the regulatory burden of this standard. These alternatives included rescinding Standard No. 101, regulating only the controls and displays related to safety or required by other safety standards, consolidating controls and displays required in other standards, and permitting the use of ISO symbols to identify controls and displays.

The public comments on the proposal indicate that the current requirements are not imposing unnecessary regulatory burdens. Further, there was no broad consensus, even among the vehicle manufacturers, in support of any of the proposals.

Several commenters urged the agency to further international harmonization by adopting the proposal to permit the use of recognized international symbols for the controls and displays inside a vehicle. Although NHTSA is not adopting that proposal for the reasons explained below, the agency is committed to exploring the possibilities of harmonizing its regulatory requirements with the regulatory requirements of other nations, provided that such harmonization does not reduce the safety protection afforded to the American public. As evidence of that commitment, the agency has held a public meeting on July 10 and July 11, 1996 and a public workshop on January 16, 1997 on the subject of harmonizing the requirements of the Federal motor vehicle safety standards with the counterpart requirements in other countries' safety standards. The agency used the meeting and workshop to explain to the public what factors the agency would consider in deciding whether the U.S. safety standard and some other nation's safety standard are ''functionally equivalent,'' and to get public comments on the process the agency proposes to use to make functional equivalence determinations.

NHTSA believes it is more appropriate for the agency to establish a comprehensive approach and process for considering functional equivalence of the Federal motor vehicle safety standards and other nations' standards before the agency considers the functional equivalence of any standard or group of standards. Once the agency's comprehensive approach and process are in place for functional equivalence decisions, NHTSA will consider any requests for functional equivalence determinations of Standard No. 101 that are made according to the established process. It would be premature to consider that subject in this rulemaking, outside the overall process for considering functional equivalence.

Accordingly, rulemaking to change Standard No. 101 is hereby terminated except with respect to the proposal to remove outdated language. The outdated language is hereby removed.

Implementation of Proposal Two—Removing Outdated Provisions

No commenter opposed removal of the outdated provisions. Removing unnecessary regulatory language is consistent with the Regulatory Reinvention Initiative. As described in the NPRM, the outdated language includes references to vehicles manufactured before September 1, 1987 and September 1, 1989. In addition, two tables, Table 1(a) ''Identification and Illumination of Controls'' and Table 2(a) ''Identification and Illumination of Internal Displays'' apply to vehicles manufactured before September 1, 1987.

Effective Date

The agency determines that there is good cause shown that an effective date earlier than 180 days after issuance is in the public interest. This final rule only removes outdated provisions from Standard No. 101 and makes no substantive changes to the Standard. Recently, the agency amended its provisions in 49 CFR section 553.35 regarding petitions for reconsideration to extend the period within which petitions may be filed to 45 days. Accordingly, the final rule will take effect 45 days after its publication in the **Federal Register**.

Rulemaking Analyses and Notices

1. Executive Order 12866 and DOT Regulatory Policies and Procedures

This notice of proposed rulemaking was not reviewed under Executive Order 12866 (Regulatory Planning and Review). NHTSA has analyzed the impact of this rulemaking action and determined that it is not ''significant'' within the meaning of the Department of Transportation's regulatory policies and procedures. This final rule has no effect on the costs associated with controls and displays because it only removes outdated regulatory language from Standard No. 101. No substantive changes are made in Standard No. 101.

2. Regulatory Flexibility Act

NHTSA has also considered the impacts of this final rule under the Regulatory Flexibility Act. For the reasons explained above, I hereby certify that this final rule does not have a significant economic impact on a substantial number of small entities. Accordingly, there is no significant effect on small organizations, jurisdictions or other entities which purchase new motor vehicles. For this reason, a final regulatory flexibility analysis has not been prepared.

3. National Environmental Policy Act

NHTSA has also analyzed this final rule under the National Environmental Policy Act and determined that it would not have any significant impact on the quality of the environment.

4. Executive Order 12612 (Federalism)

NHTSA has analyzed this final rule in accordance with the principles and criteria contained in E.O. 12612, and has determined that it would not have significant federalism implications to warrant the preparation of a Federalism Assessment.

5. Civil Justice Reform

This final rule does not have any retroactive effect. Under 49 U.S.C. 30103, whenever a Federal motor vehicle safety standard is in effect, a State may not adopt or maintain a safety standard applicable to the same aspect of performance which is not identical to the Federal standard, except to the extent that the State requirement imposes a higher level of performance and applies only to vehicles procured for the State's use. 49 U.S.C. 30161 sets forth a procedure for judicial review of final rules establishing, amending or revoking Federal motor vehicle safety standards. That section does not require submission of a petition for reconsideration or other administrative proceedings before parties may file suit in court.

List of Subjects in 49 CFR Part 571

Imports, Motor vehicle safety, Motor vehicles, Rubber and rubber products, Tires.

In consideration of the foregoing, NHTSA amends 49 CFR part 571 as follows:

1. The authority section for part 571 continues to read as follows:

Authority: 49 U.S.C. 322, 30111, 30115, 30117, and 30166; delegation of authority at 49 CFR 1.50.

2. Section 571.101 is amended by revising S3., revising S5., and revising S5.3.3 to read as follows:

§ 571.101 Standard No. 101; Controls and displays.

* * * * *

S3. *Application*. This standard applies to passenger cars, multipurpose passenger vehicles, trucks, and buses.

* * * * *

S5. *Requirements.* Each passenger car, multipurpose passenger vehicle, truck and bus manufactured with any control listed in S5.1 or in column 1 of Table 1, and each passenger car, multipurpose passenger vehicle and truck or bus less than 10,000 pounds GVWR with any display listed in S5.1 or in column 1 of Table 2, shall meet the requirements of this standard for the location, identification, and illumination of such control or display.

* * * * *

S5.3.3 (a) Means shall be provided for making controls, gauges, and the identification of those items visible to the driver under all driving conditions.

(b) The means for providing the required visibility—

(1) Shall be adjustable to provide at least two levels of brightness, one of which is barely discernible to a driver who has adapted to dark ambient roadway conditions.

(2) May be operable manually or automatically, and

(3) May have levels of brightness at which those items and identification are not visible.

(c) If the level of brightness is adjusted by automatic means to a point where those items or their identification are not visible to the driver, a means shall be provided to enable the driver to restore visibility.

* * * * *

3. Section 571. 101 is revised by removing Table 1(a) ''Identification and Illumination of Controls'' following Table 1.

4. Section 571.101 is revised by removing Table 2(a) ''Identification and Illumination of Internal Displays'' following Table 2.

Issued on: June 6, 1997.

Ricardo Martinez,

Administrator.

[FR Doc. 97–15675 Filed 6–13–97; 8:45 am]

BILLING CODE 4910–59–P

DEPARTMENT OF COMMERCE

National Oceanic and Atmospheric Administration

50 CFR Part 660

[Docket No. 970403076–7114–02; I.D. 061097D]

Fisheries Off West Coast States and in the Western Pacific; Pacific Coast Groundfish Fishery; Whiting Closure for the Catcher/Processor Sector

AGENCY: National Marine Fisheries Service (NMFS), National Oceanic and Atmospheric Administration (NOAA), Commerce.

ACTION: Fishing restrictions; request for comments.

SUMMARY: NMFS announces closure of the 1997 catcher/processor fishery for whiting at 12:00 noon June 11, 1997, because the allocation for the catcher/processor sector will be reached by that time. This action is authorized by regulations implementing the Pacific Coast Groundfish Fishery Management Plan (FMP), which governs the groundfish fishery off Washington, Oregon, and California. This action is intended to keep the harvest of whiting at levels announced by the Secretary of Commerce on May 20, 1997.

DATES: Effective from 12:00 noon (local time) June 11, 1997, until the start of the 1998 primary season for the catcher/processor sector, unless modified, superseded or rescinded. Comments will be accepted through July 1, 1997.

ADDRESSES: Submit comment to William Stelle, Jr., Administrator, Northwest Region (Regional Administrator), National Marine Fisheries Service, 7600 Sand Point Way NE., Seattle, WA 98115–0070; or William Hogarth, Acting Regional Administrator, Southwest Region, National Marine Fisheries Service, 501 West Ocean Blvd., Suite 4200, Long Beach, CA 90802–4213.

FOR FURTHER INFORMATION CONTACT: William L. Robinson at 206–526–6140 or Rodney McInnis at 562–980–4040.

SUPPLEMENTARY INFORMATION: The regulations at 50 CFR 660.323(a)(4) (62 FR 27519, May 20, 1997) established separate allocations for the catcher/processor, mothership, and shore-based sectors of the whiting fishery. Each allocation is a harvest guideline, which, when reached, results in the end of the primary season for that sector. The catcher/processor sector is composed of catcher/processors, which are vessels that harvest and process whiting. The mothership sector is composed of motherships and catcher vessels that harvest whiting for delivery to motherships. Motherships are vessels that process, but do not harvest, whiting. The shoreside sector is composed of vessels that harvest whiting for delivery to shore-based processors. The allocations, which are based on the 1997 commercial harvest guideline for whiting of 207,000 metric tons (mt), are: 70,400 mt (34 percent) for the catcher/processor sector; 49,700 mt (24 percent) for the mothership sector; and 86,900 mt (42 percent) for the shoreside sector. The best available information on June 9, 1997, indicated that the 70,400–mt catcher/processor allocation would be reached by 12:00 noon June 11, 1997. The mothership fishery reached its allocation and was closed on June 1, 1997 (62 FR 30776). Attainment of the shore-based sector allocation is not announced at this time. (The regulations at 50 CFR 600.323(a)(3)(i) describe the primary season for catcher/processors as the period(s) when at-sea processing is allowed and the fishery is open for the catcher/processor sector.)

NMFS Action

For the reasons stated above, and in accordance with the regulations at 50 CFR 660.323(a)(4)(iii)(A), NMFS herein announces: Effective 12:00 noon (local time) June 11, 1997—(1) Further taking and retaining, receiving or at-sea processing of whiting by a catcher/processor is prohibited. No additional unprocessed whiting may be brought on board after at-sea processing is prohibited, but a catcher/processor may continue to process whiting that was on board before at-sea processing was prohibited. which time further taking and retaining, receiving, or at-sea processing of whiting by a catcher/processor is prohibited.

Classification

This action is authorized by the regulations implementing the FMP. The determination to take this action is based on the most recent data available. The aggregate data upon which the determination is based are available for public inspection at the Office of the Regional Administrator (see **ADDRESSES**) during business hours. This action is taken under the authority of 50 CFR 660.323(a)(4)(iii)(A) and is exempt from review under E.O. 12866.

Authority: 16 U.S.C. 1801 *et seq.*

Dated: June 11, 1997.

Gary C. Matlock,

Director, Office of Sustainable Fisheries, National Marine Fisheries Service.

[FR Doc. 97–15735 Filed 6–11–97; 4:30 pm]

BILLING CODE 3510–22–F

Proposed Rules

Federal Register
Vol. 62, No. 115
Monday, June 16, 1997

This section of the FEDERAL REGISTER contains notices to the public of the proposed issuance of rules and regulations. The purpose of these notices is to give interested persons an opportunity to participate in the rule making prior to the adoption of the final rules.

DEPARTMENT OF AGRICULTURE

Federal Crop Insurance Corporation

7 CFR Parts 401 and 457

Tobacco (Guaranteed Plan) Endorsement; and Common Crop Insurance Regulations, Guaranteed Tobacco Crop Insurance Provisions

AGENCY: Federal Crop Insurance Corporation, USDA.

ACTION: Proposed rule.

SUMMARY: The Federal Crop Insurance Corporation (FCIC) proposes specific crop provisions for the insurance of guaranteed tobacco. The provisions will be used in conjunction with the Common Crop Insurance Policy Basic Provisions, which contain standard terms and conditions common to most crops. The intended effect of this action is to provide policy changes to better meet the needs of the insured, include the current tobacco (guaranteed plan) endorsement with the Common Crop Insurance Policy for ease of use and consistency of terms, and to restrict the effect of the current tobacco (guaranteed plan) endorsement to the 1997 and prior crop years.

DATES: Written comments and opinions on this proposed rule will be accepted until close of business July 16, 1997 and will be considered when the rule is to be made final.

ADDRESSES: Interested persons are invited to submit written comments to the Director, Product Development Division, Federal Crop Insurance Corporation, United States Department of Agriculture, 9435 Holmes Road, Kansas City, MO 64131.

FOR FURTHER INFORMATION CONTACT: Gary Johnson, Insurance Management Specialist, Research and Development, Product Development Division, Federal Crop Insurance Corporation, at the Kansas City, MO, address listed above, telephone (816) 926–7730.

SUPPLEMENTARY INFORMATION:

Executive Order 12866

The Office of Management and Budget (OMB) has determined this rule to be exempt for the purpose of Executive Order 12866, and, therefore, this rule has not been reviewed by OMB.

Paperwork Reduction Act of 1995

The amendments set forth in this proposed rule contains information collection that requires clearance by OMB under the provisions of 44 U.S.C. chapter 35.

The title of this information collection is ''Multiple Peril Crop Insurance.'' The information to be collected includes a crop insurance application and acreage report. Information collected from the application and acreage report is electronically submitted to FCIC by the reinsured companies. Potential respondents to this information collection are producers of guaranteed tobacco that are eligible for Federal crop insurance.

The information requested is necessary for the reinsured companies and FCIC to provide insurance and reinsurance, determine eligibility, determine the correct parties to the agreement or contract, determine and collect premiums or other monetary amounts, and pay benefits.

All information is reported annually. The reporting burden for this collection of information is estimated to average 16.9 minutes per response for each of the 3.6 responses from approximately 1,755,000 respondents. The total annual burden on the public for this information collection is 2,676,932 hours.

FCIC is requesting comments on the following: (a) whether the proposed collection of information is necessary for the proper performance of the functions of the agency, including whether the information shall have practical utility; (b) the accuracy of the agency's estimate of the burden of the proposed collection of information; (c) ways to enhance the quality, utility, and clarity of the information to be collected; and (d) ways to minimize the burden of the collection of information on respondents, including through the use of automated collection techniques or other forms of information gathering technology.

Comments regarding paperwork reduction should be submitted to the Desk Officer for Agriculture, Office of Information and Regulatory Affairs, Office of Management and Budget, Washington, D.C. 20503.

OMB is required to make a decision concerning the collections of information contained in these proposed regulations between 30 and 60 days after submission to OMB. Therefore, a comment to OMB is best assured of having full effect if OMB receives it within 30 days of publication. This does not affect the deadline for the public to comment on the proposed regulation.

Unfunded Mandates Reform Act of 1995

Title II of the Unfunded Mandates Reform Act of 1995 (UMRA), Public Law 104–4, establishes requirements for Federal agencies to assess the effects of their regulatory actions on State, local, and tribal governments and the private sector. This rule contains no Federal mandates (under the regulatory provisions of title II of the UMRA) for State, local, and tribal governments or the private sector. Thus, this rule is not subject to the requirements of sections 202 and 205 of the UMRA.

Executive Order 12612

It has been determined under section 6(a) of Executive Order No. 12612, Federalism, that this rule does not have sufficient federalism implications to warrant the preparation of a Federalism Assessment. The provisions contained in this rule will not have a substantial direct effect on States or their political subdivisions, or on the distribution of power and responsibilities among the various levels of government.

Regulatory Flexibility Act

This regulation will not have a significant impact on a substantial number of small entities. New provisions included in this rule will not impact small entities to a greater extent than large entities. Under the current regulations, a producer is required to complete an application and acreage report. If the crop is damaged or destroyed, the insured is required to give notice of loss and provide the necessary information to complete a claim for indemnity. The insured must also annually certify to the previous years production if adequate records are available to support the certification. The producer must maintain the

production records to support the certification information for at least three years. This regulation does not alter those requirements. The amount of work required of the insurance companies delivering and servicing these policies will not increase significantly from the amount of work currently required. This rule does not have any greater or lesser impact on the producer. Therefore, this action is determined to be exempt from the provisions of the Regulatory Flexibility Act (5 U.S.C. 605), and no Regulatory Flexibility Analysis was prepared.

Federal Assistance Program

This program is listed in the Catalog of Federal Domestic Assistance under No. 10.450.

Executive Order 12372

This program is not subject to the provisions of Executive Order No. 12372, which require intergovernmental consultation with State and local officials. See the Notice related to 7 CFR part 3015, subpart V, published at 48 FR 29115, June 24, 1983.

Executive Order 12988

This proposed rule has been reviewed in accordance with Executive Order No. 12988 on civil justice reform. The provisions of this rule will not have a retroactive effect prior to the effective date. The provisions of this rule will preempt State and local laws to the extent such State and local laws are inconsistent herewith. The administrative appeal provisions published at 7 CFR part 11 must be exhausted before any action for judicial review may be brought.

Environmental Evaluation

This action is not expected to have a significant impact on the quality of the human environment, health, and safety. Therefore, neither an Environmental Assessment nor an Environmental Impact Statement is needed.

National Performance Review

This regulatory action is being taken as part of the National Performance Review Initiative to eliminate unnecessary or duplicative regulations and improve those that remain in force.

Background

FCIC proposes to add to the Common Crop Insurance Regulations (7 CFR part 457), a new section, 7 CFR 457.136, Guaranteed Tobacco Crop Insurance Provisions. The new provisions will be effective for the 1998 and succeeding crop years. These provisions will replace and supersede the current provisions for insuring guaranteed tobacco found at 7 CFR 401.129 (Tobacco (Guaranteed Plan) Endorsement). FCIC also proposes to amend 7 CFR 401.129 to limit its effect to the 1997 and prior crop years. This rule makes minor editorial and format changes to improve the Tobacco (Guaranteed Plan) Endorsement's compatibility with the Common Crop Insurance Policy. In addition, FCIC is proposing substantive changes in the provisions for insuring guaranteed tobacco as follows:

1. The Late Planting Agreement Option (LPAO) has been discontinued because the final planting date is late enough to allow anyone with tobacco plants to timely transplant them, and the reduction in guarantee under the LPAO is not sufficient to cover the increased risks of a shorter growing season.

2. Section 1—Add definitions for terms ''adequate stand,'' ''approved yield,'' ''average value per pound,'' ''carryover tobacco,'' ''days,'' ''discount variety,'' ''FSA,'' ''fair market value,'' ''final planting date,'' ''good farming practices,'' ''harvest,'' ''irrigated practice,'' ''planted acreage,'' ''practical to replant,'' ''priming,'' ''production guarantee,'' ''replanting,'' ''season average market price,'' ''support price per pound,'' ''tobacco bed,'' ''USDA,'' and ''written agreement'' for clarification. The definition of ''harvest'' was revised to remove the requirement that 20 percent of the production guarantee per acre must be cut from each acre in order for the unit to be considered harvested. Since the harvest incentive of 35 percent of the guarantee has been deleted, this provision is no longer necessary. Added the definition of ''hydroponic plants'' to identify seedlings grown in a liquid nutrient solution.

3. Section 3(b)—Allow the use of actual production history to determine the approved yield for insurance purposes. The most accurate determination of the yield for the unit uses insured's records of production.

4. Section 4—Change the contract date from December 31 to November 30 in order to maintain an adequate time period between this date and the sales closing or cancellation date to permit the insured to make informed insurance decisions.

5. Section 5—Change the cancellation and termination dates to March 15. This conforms to the required movement of the spring planted crop sales closing dates 30 days earlier by the Federal Crop Insurance Reform Act of 1994.

6. Section 7(d)—Clarify that any acreage damaged prior to the final planting date must be replanted unless replanting is not practical to replant.

7. Section 9 (c) and (d)—Clarify that insects and plant disease are insurable causes of loss, but not if damage was due to insufficient or improper application of pest or disease control measures.

8. Section 10(a)—Require the producer to leave, until the earlier of insurer's inspection or 15 days after harvest, representative samples of each unharvested tobacco types of at least 5 feet wide, (instead of 10 feet wide) the entire length of each field in the unit. The smaller sample size is reasonable given the small acreage allotments of tobacco.

9. Section 11(d)—Clarify that quality adjustment for mature tobacco damaged by insurable causes and yielding an average value per pound less than the market price will be based on USDA Official Standard Grades for the insured type.

10. Section 11(h)—Require that once the insurance provider agrees that any current year's or carryover tobacco has no market value, the insured must destroy it. This eliminates the opportunity to falsely report carryover and current year's tobacco as of no value to increase indemnity payments. This provision is consistent with FSA's requirement that tobacco that having no value must be destroyed.

11. Section 12—Provide insurance coverage by written agreement. FCIC has a long standing policy of permitting certain modifications of insurance contracts by written agreement for some policies. This amendment allows FCIC to tailor the policy to a specific insured in certain instances. The new section will cover the procedures for, and duration of, written agreements.

Good cause is shown to allow 30 days for comments after this rule is published in the **Federal Register**. This rule improves guaranteed tobacco crop insurance coverage and brings it under the Common Crop Insurance Policy Provisions for consistency among policies. Although, the contract change date is December 31, 1997, the final rule must be published by July 7, 1997. Publication is required by this date to achieve revision and timely distribution of the actuarial documents thereby allowing the reinsured companies and insureds sufficient time to implement the new provisions. Therefore, public interest requires the agency to act immediately to make these provisions available for the 1988 crop year.

List of Subjects in 7 CFR Parts 401 and 457

Crop insurance, Guaranteed tobacco, Tobacco (guaranteed plan) endorsement.

Proposed Rule

Accordingly, for the reasons set forth in the preamble, the Federal Crop Insurance Corporation hereby proposes to amend 7 CFR parts 401 and 457, as follows:

PART 401—GENERAL CROP INSURANCE REGULATIONS; REGULATIONS FOR THE 1988 AND SUBSEQUENT CONTRACT YEARS

1. The authority citation for 7 CFR part 401 continues to read as follows:

Authority: 7 U.S.C. 1506(1), 1506(p).

2. Section 401.129 introductory paragraph is revised to read as follows:

§ 401.129 Tobacco (guaranteed plan) endorsement.

The provisions of the Tobacco (Guaranteed Plan) Endorsement for the 1990 through the 1997 crop years are as follows:

* * * * *

PART 457—COMMON CROP INSURANCE REGULATIONS; REGULATIONS FOR THE 1994 AND SUBSEQUENT CONTRACT YEARS

4. The authority citation for 7 CFR part 457 continues to read as follows:

Authority: 7 U.S.C. 1506(1), 1506(p).

5. Section 457.136 is added to read as follows:

§ 457.136 Guaranteed tobacco crop insurance provisions.

The Guaranteed Tobacco Crop Provisions for the 1998 and succeeding crop years are follows:

FCIC policies:

UNITED STATES DEPARTMENT OF AGRICULTURE

Federal Crop Insurance Corporation

Reinsured policies

(Appropriate title for insurance provider)

Both FCIC and reinsured policies:

Guaranteed Tobacco Crop Provisions

If a conflict exists between the Basic Provisions (§ 457.8), these Crop Provisions, and the Special Provisions; the Special Provisions will control these Crop Provisions and the Basic Provisions; and these Crop Provisions will control the Basic Provisions.

1. Definitions

Adequate stand. A population of live plants per unit of acreage which will produce at least the yield used to establish your production guarantee.

Approved yield. The yield calculated in accordance with 7 CFR part 400, subpart G.

Average value. The total value of all production harvested from the unit divided by the harvested pounds.

Carryover tobacco. Any tobacco produced on the FSA Farm Serial Number in previous years that remained unsold at the end of the most recent marketing year.

Days. Calendar days.

Discount variety. Tobacco defined as such under the provisions of the United States Department of Agriculture tobacco price support program.

FSA. The Farm Service Agency, an agency of the United States Department of Agriculture, or a successor agency.

Fair market value. The current year's tobacco growing season average price for the applicable type of tobacco obtained from the sale of the tobacco through a market other than an auction warehouse.

Final planting date. The date contained in the Special Provisions for the insured crop by which the crop must initially be planted in order to be insured for the full production guarantee.

Good farming practices. The cultural practices generally in use in the county for the crop to make normal progress toward maturity and produce at least the yield used to determine the production guarantee, and are those recognized by the Cooperative State Research, Education, and Extension Service as compatible with agronomic and weather conditions in the county.

Harvest. Cutting or priming and removing all insured tobacco from the field in which it was grown.

Hydroponic plants. Seedlings grown in liquid nutrient solutions.

Market price:

(a) For types 11, 12, 13, 14, 21, 22, 23, 31, 35, 36, 37, 42, 44, 54, and 55 the following price is:

(1) The support price per pound for the insured type of tobacco as announced by the USDA for its tobacco price support program or;

(2) If for any crop year a tobacco price support program is not in effect, the current year's season average market price, if available; if not available, the previous year's season average market price for the applicable insured type tobacco grown in the area.

(b) For types 32, 41, 51, 52, and 61, the current year's season average market price, if available; if not available, the previous year's season average market price for the applicable insured type of tobacco grown in the area.

Planted acreage. Land in which tobacco seedlings, including hydroponic plants, have been transplanted by hand or machine from the tobacco bed to the field.

Practical to Replant. In lieu of the definition of ''Practical to replant'' contained in section 1 of the Basic Provisions (§ 457.8), practical to replant is defined as our determination, after loss or damage to the insured crop, based on factors, including but not limited to moisture availability, condition of the field, time to crop maturity, and marketing window, that replanting the insured crop will allow the crop to attain maturity prior to the calendar date for the end of the insurance period. It will not be considered practical to replant after the final planting date.

Priming. A method of harvesting tobacco by picking the leaves from the stalk as they mature.

Production guarantee (per acre). Either the number of pounds of tobacco for the tobacco type and classification shown on the county actuarial table or the approved yield, as provided in the Special Provisions, multiplied by the coverage level percentage you elect.

Replanting. Performing the cultural practices necessary to replace the tobacco plant, and then replacing the tobacco plant in the insured acreage with the expectation of growing a successful crop.

Season average market price. The average price paid by buyers for a tobacco type for all days tobacco sales occur at public markets during the tobacco sales season in the area in which the farm is located.

Support price. The average price per pound for the type of tobacco as announced by the USDA under its tobacco price support program.

Tobacco bed. An area protected from adverse weather, in which tobacco seeds are sown and seedlings are grown until transplanted into the tobacco field by hand or machine.

USDA. United States Department of Agriculture.

Written agreement. A written document that alters designated terms of this policy in accordance with section 12.

2. Unit Division

(a) Unless limited by the Special Provisions, a unit as defined in section 1 (Definitions) of the Basic Provisions (§ 457.8), will be further divided into basic units by type of tobacco. Basic units may be divided into optional units if, for each optional unit you meet all the conditions of this section.

(b) Basic units may not be divided into optional units on any basis including, but not limited to, production practice, type, variety, and planting period, other than as described in this section.

(c) If you do not comply fully with these provisions, we will combine all optional units that are not in compliance with these provisions into the basic unit from which they were formed. We will combine the optional units at any time we discover that you have failed to comply with these provisions. If failure to comply with these provisions is determined to be inadvertent, and the optional units are combined into a basic unit, that portion of the premium paid for the purpose of electing optional units will be refunded to you for the units combined.

(d) All optional units you selected for the crop year must be identified on the acreage report for that crop year.

(e) The following requirements must be met for each optional unit:

(1) You must have provided records, by the production reporting date, which can be independently verified, of planted acreage and production for each optional unit for at least the last crop year used to determine your production guarantee;

(2) You must plant the crop in a manner that results in a clear and discernable break

in the planting pattern at the boundaries of each optional unit;

(3) For each crop year, records of marketed production or measurement of stored production from each optional unit must be maintained in such manner that permits us to verify the production from each optional unit, or the production from each unit must be kept separate until loss adjustment is completed by us; and

(4) Each optional unit must be located in a separate farm identified by a FSA Farm Serial Number.

3. Insurance Guarantees, Coverage Levels, and Prices for Determining Indemnities

In addition to the requirements of section 3(c) (Insurance Guarantees, Coverage Levels, and Prices for Determining Indemnities) of the Basic Provisions (§ 457.8):

(a) You must select only one price election and coverage level for each guaranteed tobacco type designated in the Special Provisions that you elect to insure.

(b) You may be required to file an annual production report to us, if required by the Special Provisions, to establish an approved yield in lieu of the classification published in the actuarial table. If we require you to file an annual production report, you must do so in accordance with section 3(c) (Insurance Guarantees, Coverage Levels, and Prices for Determining Indemnities) of the Basic Provisions (§ 457.8).

4. Contract Changes

In accordance with section 4 (Contract Changes) in the Basic Provisions (§ 457.8), the contract change date is November 30 preceding the cancellation date.

5. Report of Acreage

In addition to the requirements of section 6 (Report of Acreage) of the Basic Provisions (§ 457.8), you must report any carryover tobacco from previous years on the acreage report.

6. Cancellation and Termination Dates

In accordance with section 2 (Life of Policy, Cancellation, and Termination) of the Basic Provisions (§ 457.8), the cancellation and termination dates are March 15.

7. Insured Crop

In accordance with section 8 (Insured Crop) of the Basic Provisions (§ 457.8), the crop insured will be one or more of the tobacco types designated in the Special Provisions, in which you have a share, that you elect to insure, and for which a premium rate is provided by the actuarial table.

8. Insurable Acreage

In addition to the provisions of section 9 (Insurable Acreage) of the Basic Provisions (§ 457.8), we will not insure any acreage:

(a) Planted to a discount variety;

(b) Planted to a tobacco type for which no premium rate is provided by the actuarial table;

(c) Planted in any manner other than provided in definition of ''planted acreage'' in section 1 of the these crop provisions, unless otherwise provided by the Special Provisions or by written agreement; or

(d) Damaged before the final planting date to the extent that the majority of producers in the area would normally not further care for the crop, unless such crop is replanted or we agree that replanting is not practical.

9. Insurance Period

In accordance with the provisions of section 11 (Insurance Period) of the Basic Provisions (§ 457.8), insurance ceases the earliest of:

(a) Destruction of the tobacco;

(b) Weighing-in at the tobacco warehouse;

(c) Removal of the tobacco from the unit (except for curing, grading, packing, or immediate delivery to the tobacco warehouse); or

(d) The calendar date for the end of the insurance period, which is:

(1) Types 11 and 12—November 30;

(2) Type 13—October 31;

(3) Type 14—October 15;

(4) Types 31 & 36—February 28;

(5) Types 21, 35 and 37—March 15;

(6) Types 22 and 23—April 15;

(7) Type 32—May 15;

(8) All other types—April 30.

10. Causes of Loss

In accordance with the provisions of section 12 (Causes of Loss) of the Basic Provisions (§ 457.8), insurance is provided only against the following causes of loss that occur during the insurance period:

(a) Adverse weather conditions;

(b) Fire;

(c) Insects, but not damage due to insufficient or improper application of pest control measures;

(d) Plant disease, but not damage due to insufficient or improper application of disease control measures;

(e) Wildlife, unless proper measures to control wildlife have not been taken;

(f) Earthquake;

(g) Volcanic eruption; or

(h) Failure of irrigation water supply, if caused by an insured peril that occurs during the insurance period.

11. Duties In The Event of Damage or Loss

(a) In accordance with the requirements of section 14 (Duties in the Event of Damage or Loss) of the Basic Provisions (§ 457.8), any representative samples we may require of each unharvested tobacco type must be at least 5 feet wide and extend the entire length of each field in the unit. The samples must not be harvested or destroyed until the earlier of our inspection or 15 days after harvest of the balance of the unit is completed.

(b) If tobacco types 11, 12, 13, or 14 are insured and you have filed a notice of damage, you also must leave all tobacco stalks and stubble intact for our inspection. The stalks and stubble must not be destroyed until we give you written consent to do so or until 30 days after the end of the insurance period whichever is earlier.

12. Settlement of Claim

(a) We will determine your loss on a unit basis. In the event you are unable to provide separate acceptable production records:

(1) For any optional units, we will combine all optional units for which such production records were not provided; or

(2) For any basic units, we will allocate any commingled production to such units in proportion to our liability on the harvested acreage for the units.

(b) In the event of loss or damage covered by this policy, we will settle your claim by:

(1) Multiplying the insured acreage by its respective production guarantee;

(2) Multiplying each result in section 11(b)(1) by the respective price election;

(3) Subtracting the value of the total production to be counted from section 11(c) from the total in section 11(b)(2); and

(4) Multiplying the result of section 11(b)(3) by your share.

(c) The value of the total production to count (pounds of production appraised or harvested multiplied by the applicable price) for all insurable acreage on the unit will include:

(1) All appraised production as follows:

(i) Not less than the production guarantee per acre for acreage:

(A) That is abandoned;

(B) Put to another use without our consent;

(C) That is damaged solely by uninsured causes;

(D) For which you fail to provide acceptable production records; or

(E) Of types 11, 12, 13, or 14 when the stalks and stubble have been destroyed without our consent;

(ii) Production lost due to uninsured causes;

(iii) Potential production on insured acreage that you intend to put to another use or abandon with our consent, if you and we agree on the appraised amount of production. Upon such agreement, the insurance period for that acreage will end when you put the acreage to another use or abandon the crop. If agreement on the appraised amount of production is not reached:

(A) If you do not elect to continue to care for the crop, we may give you consent to put the acreage to another use if you agree to leave intact, and provide sufficient care for, representative samples of the crop in locations acceptable to us (The amount of production to count for such acreage will be based on the harvested production or appraisals from the samples at the time harvest should have occurred. If you do not leave the required samples intact, or fail to provide sufficient care for the samples, our appraisal made prior to giving you consent to put the acreage to another use will be used to determine the amount of production to count); or

(B) If you elect to continue to care for the crop, the amount of production to count for the acreage will be the harvested production, or our reappraisal if additional damage occurs and the crop is not harvested; and

(2) All harvested production from insurable acreage.

(d) Mature tobacco production that is damaged by insurable causes will be adjusted for quality based on the USDA Official Standard Grades for the insured type if it has an average value per pound less than the market price in the following manner:

(1) Dividing the average value of the damaged harvested production by the market price;

(2) Multiplying the result in section 11(d)(1) (not to exceed 1.0) by the number of pounds of damaged harvested tobacco; and

(3) Multiplying the product by your price election.

If no market price has been established for the grade of the damaged tobacco, its value will be determined by reducing the lowest market price available by 20 percent for each grade that the production falls below the grade for which the lowest price is available.

(e) To enable us to determine the fair market value of tobacco not sold through auction warehouses, we must be given the opportunity to inspect such tobacco before it is sold, contracted to be sold, or otherwise disposed of; failure to provide us the opportunity to inspect such tobacco may result in rejection of any claim for indemnity.

(f) If the best offer you receive for any such tobacco is considered by us to be inadequate, we may obtain additional offers on your behalf.

(g) Once we agree that any carryover or current year's tobacco has no market value due to insured causes, you must destroy it. If you refuse to destroy the tobacco with no value, we will determine the value and include it as production to count.

13. Written Agreements

Terms of this policy that are specifically designated for the use of written agreements may be altered by written agreement in accordance with the following:

(a) You must apply in writing for each written agreement no later than the sales closing date, except as provided in section 12(e);

(b) The application for a written agreement must contain all variable terms of the contract between you and us that will be in effect if the written agreement is not approved;

(c) If approved, the written agreement will include all variable terms of the contract, including, but not limited to, crop type or variety, the guarantee, premium rate, and price election;

(d) Each written agreement will only be valid for one year (if the written agreement is not specifically renewed the following year, insurance coverage for subsequent crop years will be in accordance with the printed policy); and

(e) An application for a written agreement submitted after the sales closing date may be approved if, after a physical inspection of the acreage, it is determined that no loss has occurred and the crop is insurable in accordance with the policy and written agreement provisions.

Signed in Washington, D.C., on June 10, 1997.

Kenneth D. Ackerman,

Manager, Federal Crop Insurance Corporation

[FR Doc. 97–15715 Filed 6–13–97; 8:45 am]

BILLING CODE 3410–08–P

DEPARTMENT OF AGRICULTURE

Agricultural Marketing Service

7 CFR Part 927

[Docket Nos. AO–99–A7; FV96–927–1]

Winter Pears Grown in Oregon, Washington, and California; Recommended Decision and Opportunity To File Written Exceptions To Proposed Further Amendment of Marketing Agreement and Order No. 927

AGENCY: Agricultural Marketing Service, USDA.

ACTION: Proposed rule and opportunity to file exceptions.

SUMMARY: This recommended decision invites written exceptions on proposed amendments to the marketing agreement and order for winter pears grown in Oregon, Washington, and California. The proposed amendments would remove the State of California from the order and make related changes to provisions concerning the production area, districts, and establishment and membership of the Winter Pear Control Committee (Committee). Another amendment would allow the use of telecopiers or other electronic means in Committee voting procedures. The proposed amendments are intended to improve the administration, operation and functioning of the order.

DATES: Written exceptions must be filed by June 26, 1997.

ADDRESSES: Written exceptions should be filed with the Hearing Clerk, U.S. Department of Agriculture, room 1079–S, Washington, DC 20250–9200, Facsimile number (202) 720–9776. Four copies of all written exceptions should be submitted and they should reference the docket numbers and the date and page number of this issue of the **Federal Register**. Exceptions will be made available for public inspection in the Office of the Hearing Clerk during regular business hours.

FOR FURTHER INFORMATION CONTACT: Kathleen M. Finn, Marketing Specialist, Marketing Order Administration Branch, Fruit and Vegetable Division, AMS, USDA, room 2523–S, Washington, DC 20250–0200; telephone: (202) 720–2491, or FAX (202) 720–5698; or Teresa Hutchinson, Marketing Specialist, Northwest Marketing Field Office, Marketing Order Administration Branch, Fruit and Vegetable Division, AMS, USDA, 1220 S.W. Third Avenue, room 369, Portland, OR 97204–2807; telephone (509) 326–2724 or FAX (509) 326–7440. Small businesses may request information on compliance with this regulation by contacting: Jay Guerber, Marketing Order Administration Branch, Fruit and Vegetable Division, AMS, USDA, P.O. Box 96456, room 2523–S, Washington, DC 20090–6456; telephone (202) 720–2491; Fax (202) 720–5698.

SUPPLEMENTARY INFORMATION: Prior documents in this proceeding: Notice of Hearing issued on June 24, 1996, and published in the June 26, 1996, issue of the **Federal Register** (61 FR 33047).

This administrative action is governed by the provisions of sections 556 and 557 of Title 5 of the United States Code and, therefore, is excluded from the requirements of Executive Order 12866.

Preliminary Statement

Notice is hereby given of the filing with the Hearing Clerk of this recommended decision with respect to the proposed further amendment of Marketing Agreement and Order No. 927, regulating the handling of winter pears grown in Oregon, Washington, and California, and the opportunity to file written exceptions thereto. Copies of this decision can be obtained from Kathleen M. Finn or Teresa Hutchinson whose addresses are listed above.

This action is issued pursuant to the provisions of the Agricultural Marketing Agreement Act of 1937, as amended (7 U.S.C. 601 *et seq.*), hereinafter referred to as the ''Act,'' and the applicable rules of practice and procedure governing the formulation of marketing agreements and orders (7 CFR Part 900).

The proposed amendment of Marketing Agreement and Order No. 927 is based on the record of a public hearing held in Sacramento, California, on July 9, 1996, and in Portland, Oregon, on July 10, 1996. Notice of this hearing was published in the **Federal Register** on June 26, 1996. The notice of hearing contained proposals submitted by the Winter Pear Control Committee (Committee), which locally administers the order.

The Committee's proposed amendments would: (1) Revise the definition of ''production area'' to mean only the States of Oregon and Washington; (2) revise ''district'' by removing California, leaving only those districts designated in the States of Oregon and Washington; (3) revise ''establishment and membership'' of the Committee to be consistent with the reduction in size of the regulated production area; (4) revise ''procedure of Control Committee'', ''(a) Quorum and voting'', so that the number of members needed for a quorum is consistent with the revised Committee representation, and amend ''(b) mail

voting'', to allow for the use of telecopiers and other electronic means; and (5) revise the definition of ''pears'' to exclude pears produced in California.

The Notice of Hearing also included a proposal by the Fruit and Vegetable Division, Agricultural Marketing Service (AMS), U.S. Department of Agriculture, to make such changes as are necessary to the order, if any or all of the above amendments are adopted, so that all of its provisions conform with the proposed amendment.

At the conclusion of the hearing, the Administrative Law Judge fixed August 16, 1996, as the final date for interested persons to file proposed findings and conclusions or written arguments and briefs based on the evidence received at the hearing. No briefs were received.

Small Business Considerations

Pursuant to requirements set forth in the Regulatory Flexibility Act (RFA), the Agricultural Marketing Service (AMS) has considered the economic impact of this action on small entities. Accordingly, AMS has prepared this initial regulatory flexibility analysis.

The purpose of the RFA is to fit regulatory actions to the scale of business subject to such actions in order that small businesses will not be unduly or disproportionately burdened. Small agricultural producers have been defined by the Small Business Administration (SBA) (13 CFR 121.601) as those having annual receipts of less than $500,000. Small agricultural service firms, which include handlers regulated under the order, are defined as those with annual receipts of less than $5,000,000.

Interested persons were invited to present evidence at the hearing on the probable regulatory and informational impact of the proposed amendments on small businesses. The record indicates that handlers would not be unduly burdened by any additional regulatory requirements, including those pertaining to reporting and recordkeeping, that might result from this proceeding.

During the 1995–96 crop year, approximately 100 handlers were regulated under Marketing Order No. 927. In addition, there were about 1,800 producers of winter pears in the production area. Production for the 1995–96 season showed that 15,316,776 standard boxes were produced in Oregon and Washington, while California produced 434,380 standard boxes.

The Act requires the application of uniform rules on regulated handlers. Marketing orders and amendments thereto are unique in that they are normally brought about through group action of essentially small entities for their own benefit. Thus, both the RFA and the Act are compatible with respect to small entities.

The proposed amendment to remove the State of California would allow the Northwest winter pear industry to operate more efficiently. There are approximately 60 growers and 19 handlers of winter pears in California who have asked to be removed from the marketing order since the harvesting and marketing seasons for California pears are different than those for pears grown in Oregon and Washington. Production for the 1995–96 season showed that 15,316,776 standard boxes were produced in Oregon and Washington, while California produced 434,380 standard boxes. Revenue generated from assessments collected in 1995–96 would be $175,923 from California compared to $6,203,295 from Oregon and Washington.

Record evidence indicated that during the 1994–95 crop year winter pears were assessed at $.43 per standard box. According to preliminary figures in the record, returns to handlers per standard box for that year were $8.31. The assessment rate is about 5 percent of the preliminary returns.

California growers believe they are funding promotion programs that are in direct competition with their own product. Record evidence showed that there would not be any additional burden imposed on handlers if such an amendment was implemented. In fact, handlers in the State of California would be relieved of any regulatory burden. Those in Oregon and Washington could continue to benefit from operation of the program. There are currently 1700 winter pear growers and 93 winter pear handlers in Oregon and Washington producing over 15 million standard boxes of pears annually. In California, there are approximately 60 winter pear growers and 19 handlers of winter pears producing over 400,000 standard boxes of pears annually.

Record evidence also showed that the collection of information under the marketing order would not be effected if California was removed from the marketing order. A witness testified that there are alternatives that would replace the current information that is being collected from the State of California, if it is needed. Accordingly, this action would not impose any additional reporting or recordkeeping requirements on either small or large pear handlers. As with all Federal marketing order programs, reports and forms are periodically reviewed to reduce information requirements and duplication by industry and public sector agencies.

The Department has not identified any relevant Federal rules that duplicate, overlap or conflict with this proposed rule.

The proposal to allow Committee members to vote by telecopiers or other electronic means would provide members with the option to use these methods if available when voting on an action is to be done quickly. This would allow Committee members to vote without assembling at a meeting place and, therefore, reduce administrative costs and act quickly on a recommendation that needs the Committee's attention. ''Other electronic means'' includes the use of modems, video and teleconferencing. The term is flexible to allow for the use of new technologies by the Committee for voting.

The additional proposals are changes that would need to be made to the marketing order to reflect the removal of the State of California.

All of these changes are designed to enhance the administration and functioning of the marketing agreement and order to the benefit of the industry.

The amendments proposed herein have been reviewed under Executive Order 12988, Civil Justice Reform. They are not intended to have retroactive effect. If adopted, the proposed amendments would not preempt any State or local laws, regulations, or policies, unless they present an irreconcilable conflict with the amendments.

The Act provides that administrative proceedings must be exhausted before parties may file suit in court. Under section 608c(15)(A) of the Act, any handler subject to an order may file with the Secretary a petition stating that the order, any provision of the order, or any obligation imposed in connection with the order is not in accordance with law and request a modification of the order or to be exempted therefrom. A handler is afforded the opportunity for a hearing on the petition. After the hearing the Secretary would rule on the petition. The Act provides that the district court of the United States in any district in which the handler is an inhabitant, or has his or her principal place of business, has jurisdiction to review the Secretary's ruling on the petition, provided an action is filed not later than 20 days after date of the entry of the ruling.

Material Issues

The material issues of record addressed in this decision are as follows:

(1) Whether to revise the definition of ''production area'' to mean only the States of Oregon and Washington;

(2) Whether to revise ''district'' by removing California, leaving only those districts designated in the States of Oregon and Washington;

(3) Whether to revise ''establishment and membership'' of the Committee to be consistent with the reduction in size of the regulated production area;

(4) Whether to revise ''procedure of Control Committee,'' ''(a) quorum and voting'', so that the number of members needed for a quorum is consistent with Committee representation, and amend ''(b) mail voting'', to allow for the use of telecopiers and other electronic means; and

(5) Whether to revise the definition of ''pears'' to exclude pears produced in California.

Findings and Conclusions

The findings and conclusions on the material issues, all of which are based on evidence presented at the hearing and the record thereof, are:

Material Issue Number 1

The definition of production area under § 927.10 should be amended by removing the State of California from the production area. The new production area would include only the States of Oregon and Washington.

Currently, § 927.10 defines the production area to include the States of Oregon, Washington and California. The winter pear marketing order has been in effect since the early 1930's. Record evidence showed that the primary operations of the marketing order have changed since the inception of the order from establishing minimum quality requirements within the industry to primarily providing an extensive promotion and research program.

Record evidence indicated that there is also a Pear Bureau (Bureau) that works in conjunction with the marketing order. The Bureau has been in existence for 60 years. Its purpose is to represent the winter pear industry in Oregon, Washington and California, and the Bartlett industry in Oregon and Washington, in market development and promotion and advertising throughout the international marketplace. The Bureau, through contractual agreement, is responsible for conducting market development and paid advertising activities authorized by the Committee.

Currently, § 927.4 of the order defines the varietal types of pears that are covered under the order to be the Beurre, D'Anjou, Beurre Bosc, Winter Nelis, and Doyenne du Comice varieties of pears grown in Oregon, Washington, and California. Also, the Forelle and Seckel varieties that are grown in Washington and Oregon are covered by the order. The major variety grown in California that is covered under the marketing order is the Beurre Bosc pear. The marketing order does not cover Bartlett pears, however there are programs conducted for Northwest Bartlett pears by the Bureau.

Record evidence showed that California Bartlett pears are included under a California pear promotion program and therefore, are not part of the Bureau's programs. In the past, the California Bartlett industry has been encouraged to be represented by the Bureau but they have not wished to be part of the Bureau. Record evidence indicated that Oregon, Washington and California winter pear handlers work in conjunction with each other to market most varieties of winter pears, but are segregated where Bartlett pears are concerned. A witness testified that California winter pear and Bartlett pear growers question why they should pay assessments promoting winter pears as well as Northwest Bartlett pears.

Record evidence also indicated that the harvest and marketing seasons are different for California pears and Northwest pears (i.e., those grown in Oregon and Washington). Winter pears grown in California are typically harvested and marketed from late July through October although the season sometimes extends into November. Northwest pears are harvested and marketed beginning late in September and continuing through the following June.

Record evidence showed that the timing of the promotional activities for winter pears are not as effective for California handlers of winter pears. For example, the majority of Bosc promotional activities conducted under the order are scheduled to commence in September or October each season. Bosc pears produced in the Greater Sacramento District of California are typically harvested and shipped by August. Therefore, California handlers are not able to take advantage of such promotional activities.

Record evidence also indicated that the pesticide research programs conducted under the marketing order may not benefit the California grower or handler. The Committee has assessed additional money to retain the registration of post-harvest fungicides, Ethoxyquin and Sodium O-Phenyl phenate (SOPP). These two materials may not be used by California shippers because of State regulatory differences. However, the California handler is still required to pay such assessment.

Record evidence showed that there are currently 1,700 winter pear growers in Oregon and Washington and 60 growers of winter pears in California. There are also 93 handlers of winter pears in Oregon and Washington and 19 handlers of winter pears in California. Production for the 1995–96 season showed that 15,316,776 standard boxes were produced in Oregon and Washington, while California produced 434,380 standard boxes. Revenue generated from assessments collected in 1995–96 would be $175,923 from California and $6,203,295 from Oregon and Washington, for a total of $6,379,218. Record evidence showed that the loss of revenue would be approximately 2.76 percent of the total current assessment income if California was excluded from the production area. A proponent testified that this loss of revenue to the total program would be relatively insignificant. Such a loss would not effect the current level of promotional and research activities and would not adversely effect the Northwest pear industry.

Record evidence showed that the production area of Oregon and Washington is the smallest practicable area which should be regulated under the marketing order for winter pears.

Material Issue Number 2

Section 927.11 should be amended by deleting paragraph (e) which specifies the district of the State of California. Section 927.11 states the districts to be covered under the marketing order. The districts are specified under the order for purposes of representation on the Committee. If California is removed from the production area as proposed by the proponents, such a change would have to be made to this section to reflect the amendment.

Material Issue Number 3

Section 927.20 should be amended by decreasing the number of Committee members from 14 members to 12 members. Also, the number of grower and handler members on the Committee would be decreased from seven members to six members for each category. Currently, the district of California is represented by one grower member and one handler member on the Committee. Since the proposed amendment would remove the State of California from coverage under the marketing order, record evidence also

supports decreasing the Committee membership by the two California members. A corresponding change would be made in the number of grower and handler members. The number would be decreased from seven to six members for each category. If California is removed from the production area as proposed by the proponents, such a change would have to be made to this section to reflect the amendment.

Material Issue Number 4

Section 927.33 should be amended by revising paragraph (a) to reflect the number of Committee members that need to be present for a quorum. Also, paragraph (b) should be revised by allowing for the use of telecopiers when Committee members need to vote on an action.

Currently, § 927.33(a) states that 10 members need to be present to constitute a quorum. Record evidence supports decreasing the quorum size to reflect the change in the Committee membership due to the removal of California. The amendment would decrease the quorum size to nine members. If California is removed from the production area as proposed by the proponents, such a change should be made to this section to reflect the amendment.

Section 927.33(b) states that the Committee may provide for members to vote by mail, telephone, or telegraph, upon due notice to all members. Record evidence supported adding the use of telecopiers as a method of voting by Committee members. This would allow the Committee to vote without being assembled at a meeting place and, therefore, reduce administrative costs and act quickly on a recommendation that needs the Committee's attention. ''Other electronic means'' is envisioned to include the use of modems, video and teleconferencing. The term is flexible to allow for the use of new technologies by the Committee for voting.

Material Issue Number 5

Section 927.4 should be amended by deleting the reference to the State of California. Currently, § 927.4 lists the varieties of pears that are covered under the marketing order. Record evidence showed that Forelle and Seckel pear varieties are exclusively grown in Oregon and Washington and are referenced as such under § 927.4. Other pear varieties are listed and are specified as being grown in the States of Oregon, Washington and California. If California is removed from the production area as proposed by the proponents, such a change would have to be made to this section to reflect the amendment.

The Notice of Hearing also included a proposal by the Fruit and Vegetable Division, Agricultural Marketing Service (AMS) to make such changes as are necessary to the order, if any or all of the above amendments are adopted, so that all of its provisions conform with the proposed amendment. One proposed amendment has been made deleting California from the title of the marketing order.

General Findings

(1) The findings hereinafter set forth are supplementary to the previous findings and determinations which were made in connection with the issuance of the marketing agreement and order and each previously issued amendment thereto. Except insofar as such findings and determinations may be in conflict with the findings and determinations set forth herein, all of the said prior findings and determinations are hereby ratified and affirmed;

(2) The marketing agreement and order, as amended, and as hereby proposed to be further amended, and all of the terms and conditions thereof, would tend to effectuate the declared policy of the Act;

(3) The marketing agreement and order, as amended, and as hereby proposed to be further amended, regulate the handling of pears grown in the production area in the same manner as, and are applicable only to, persons in the respective classes of commercial and industrial activity specified in the marketing order and agreement and order upon which a hearing has been held;

(4) The marketing agreement and order, as amended, and as hereby proposed to be further amended, are limited in their application to the smallest regional production area which is practicable, consistent with carrying out the declared policy of the Act, and the issuance of several orders applicable to subdivision of the production area would not effectively carry out the declared policy of the Act; and

(5) All handling of winter pears grown in Oregon and Washington as defined in the marketing agreement and order, as amended, and as hereby proposed to be further amended, is in the current of interstate or foreign commerce or directly burdens, obstructs, or affects such commerce.

Ten days has been determined to be an appropriate comment period for this rule because: (1) The fiscal period of the marketing order begins on July 1, 1997, and shipments of winter pears for the 1997–98 season begin in July. It would be difficult for the committee to administer this amendment part-way into the season, especially after shipments have begun. In addition, making this amendment effective as close to the beginning of the annual pear shipments would be more equitable to all handlers; (2) these issues were presented at a public hearing before an administrative law judge and no opposing testimony was presented; and (3) any comments received will be considered and a producer referendum will be conducted prior to finalization of this rule.

List of Subjects in 7 CFR Part 927

Marketing agreements, Pears, Reporting and recordkeeping requirements.

Recommended Further Amendment of the Marketing Agreement and Order

For the reasons set forth in the preamble, 7 CFR part 927 is proposed to be amended as follows:

1. The authority citation for 7 CFR part 927 continues to read as follows:

Authority: 7 U.S.C. 601–674.

PART 927—[AMENDED]

2. The part heading is revised to read as follows:

PART 927—WINTER PEARS GROWN IN OREGON AND WASHINGTON

3. Section 927.4 is revised to read as follows:

§ 927.4 Pears.

Pears means and includes any and all of the Beurre D'Anjou, Beurre Bosc, Winter Nelis, Doyenne du Comice, Forelle, and Seckel varieties of pears, and any other winter pear varieties or subvarieties that are recognized by the Control Committee and approved by the Secretary.

4. Section 927.10 is revised to read as follows:

§ 927.10 Production area.

Production area means and includes the States of Oregon and Washington.

§ 927.11 [Amended]

5. In § 927.11, paragraph (e) is removed.

§ 927.20 [Amended]

6. Section 927.20 is amended by removing the number ''14'' in the first sentence and adding in its place the number ''12'', and removing the word ''seven'' each time it appears in the third sentence and adding in its place the word ''six''.

§ 927.33 [Amended]

7. In § 927.33, paragraph (a) is amended by removing the word ''ten'' in the first sentence and adding in its place the word ''nine''; and adding the words ''telecopier or other electronic means,'' and a comma after the word ''mail'' in paragraph (b) first sentence.

Dated: June 9, 1997.

Lon Hatamiya,

Administrator, Agricultural Marketing Service.

[FR Doc. 97–15663 Filed 6–13–97; 8:45 am]

BILLING CODE 3410–02–P

DEPARTMENT OF AGRICULTURE

Rural Utilities Service

7 CFR Part 1753

Acceptance Test Policy

AGENCY: Rural Utilities Service, USDA.

ACTION: Proposed rule.

SUMMARY: The Rural Utilities Service (RUS) is proposing a minor amendment to its test acceptance procedures to correct 7 CFR part 1753.39, paragraph (c), to reflect new acceptance tests guidelines covered under RUS Bulletin 1753E–201, Acceptance Tests for Digital, Stored Program Controlled Central Office Equipment.

In the final rules section of this **Federal Register**, RUS is publishing this action as a direct final rule without prior proposal because RUS views this as a noncontroversial action and anticipates no adverse comments. If no adverse comments are received in response to the direct final rule, no further action will be taken on this proposed rule and the action will become effective at the time specified in the direct final rule. If RUS receives adverse comments, a document will be published withdrawing the effective date of the direct final rule and all public comments received will be addressed in a subsequent final rule based on this action. Any parties interested in commenting on this action should do so at this time.

DATES: Comments on this proposed action must be received July 16, 1997.

ADDRESSES: Written comments should be sent to Orren E. Cameron III, Director, Telecommunications Standards Division, Rural Utilities Service, STOP 1598, United States Department of Agriculture, 1400 Independence Ave., SW, Washington, DC, 20250–1598. RUS requires, in hard copy, a signed original and three copies of all comments (7 CFR part 1700.30(e)). All comments received will be available for public inspection at room 2835 (address as above) during regular business hours (7 CFR part 1.27(b)).

FOR FURTHER INFORMATION CONTACT: John J. Schell, Chief, Central Office Equipment Branch, Telecommunications Standards Division, Rural Utilities Service, United States Department of Agriculture, STOP 1598, 1400 Independence Avenue, SW, Washington, DC 20250–1598, telephone number (202) 720–0671.

SUPPLEMENTARY INFORMATION: See the Supplementary Information provided in the direct final rule located in the final rules section of this **Federal Register** for the applicable supplementary information on this section.

Dated: June 9, 1997.

Jill Long Thompson,

Under Secretary, Rural Development.

[FR Doc. 97–15756 Filed 6–13–97; 8:45 am]

BILLING CODE 3410–15–P

NUCLEAR REGULATORY COMMISSION

10 CFR Parts 30 and 32

RIN 3150–AF70

Exempt Distribution of a Radioactive Drug Containing One Microcurie of Carbon-14 Urea

AGENCY: Nuclear Regulatory Commission.

ACTION: Proposed rule; request for comments.

SUMMARY: The Nuclear Regulatory Commission (NRC) is proposing an amendment to its regulations that would permit NRC licensees to distribute a radioactive drug containing one microcurie of carbon-14 urea to any person for ''in vivo'' diagnostic use. The NRC has determined that the radioactive component of such a drug in capsule form presents a minimal radiation risk and, therefore, regulatory control of the drug for radiation safety is not necessary. If adopted, this amendment would make the drug more widely available, and reduce costs to patients, insurers, and the health care industry. This action is being taken in response to a petition for rulemaking (PRM–35–12) submitted by Tri-Med Specialties, Inc.

DATES: Submit comments by July 16, 1997. Comments received after this date will be considered if it is practicable to do so, but the Commission is able to assure consideration only for comments received on or before this date.

ADDRESSES: Send comments to: Secretary, U.S. Nuclear Regulatory Commission, Washington, DC 20555–0001, Attention: Rulemakings and Adjudications Staff.

Hand deliver comments to: 11555 Rockville Pike, Rockville, Maryland, between 7:30 am and 4:15 pm on Federal workdays.

The public may examine comments received, the environmental assessment and finding of no significant impact, and the regulatory analysis at the NRC Public Document Room, 2120 L Street NW., (Lower Level), Washington, DC.

FOR FURTHER INFORMATION CONTACT: Dr. Anthony N. Tse, Office of Nuclear Regulatory Research, U.S. Nuclear Regulatory Commission, Washington, DC 20555–0001, telephone (301) 415–6233 or e-mail at ANT@nrc.gov.

SUPPLEMENTARY INFORMATION:

I. Background
II. Discussion
III. Summary of Proposed Amendments
IV. Agreement State Compatibility
V. Electronic Access
VI. Finding of No Significant Environmental Impact: Availability
VII. Paperwork Reduction Act Statement
VIII. Regulatory Analysis
IX. Regulatory Flexibility Certification
X. Backfit Analysis
XI. List of Subjects

I. Background

The Petition for Rulemaking

On October 6, 1994, the Commission docketed a petition for rulemaking (Docket No. PRM–35–12) from Tri-Med Specialties, Inc (Tri-Med). In a letter dated August 23, 1994, Tri-Med petitioned the NRC to amend its regulations ''to allow for the general licensing and/or exemption for the commercial distribution by licensed pharmaceutical manufacturers of a capsule containing one micro-Curie (μCi) of ^{14}C-urea for in vivo diagnostic testing.'' The purpose of this diagnostic test is to detect the presence of the bacterium Helicobacter pylori (H. pylori), a cause of peptic ulcers.

''Peptic ulcer disease is a chronic inflammatory condition of the stomach and duodenum that affects as many as 10 percent of people in the United States at some time in their lives. The disease has relatively low mortality, but it results in substantial human suffering and high economic costs.'' (Source: Article included as an appendix to the petition, from JAMA, July 6, 1994, Vol-272, No. 1, ''H. pylori in Peptic Ulcer Disease—NIH Consensus Conference'').

In the petition, the petitioner stated the following:

Recent medical research has found that peptic ulcers are commonly caused by a bacterium called H. pylori. This

bacterium lives in the stomach of most ulcer sufferers. By treating ulcer patients with antibiotics, doctors can now cure most ulcer problems.

It is therefore necessary to detect the presence of H. pylori bacteria in ulcer patients so that the new treatment can be given appropriately. In the past, this was done by a gastroenterologist who took biopsy samples of the stomach lining at endoscopy, a procedure which was uncomfortable and expensive ($1,000).

With the new test, H. pylori can be detected non-invasively using a ^{14}C-urea tracer. ^{14}C-urea is broken down by H. pylori to form labeled CO_2 which is expired in the breath. To do the test, a doctor asks the patient to swallow the capsule with 30 mls of water. After 15 minutes the patient blows 2 liters of breath into a collection bag (a mylar balloon) which is mailed to a testing laboratory. If $^{14}C—CO_2$ more than twice background is present in the breath sample, then the patient must be infected with H. pylori.

This proposed rule, should it become final, would grant the petition for rulemaking (PRM–35–12) from Tri-Med and complete action on the petition.

Public Comments on the Petition

Following the receipt of the petition, the NRC published for public comment a notice of receipt of petition for rulemaking in the **Federal Register** on December 2, 1994 (59 FR 61831). The comment period closed on February 15, 1995. The NRC received 315 public comment letters, of which 313 support the petition (they were mostly form letters) and 2 letters opposed the petition. The two letters opposing the petition stated that the product should not receive an exempt status because the uncontrolled distribution and application of this product could lead to significant risk to the public and that the medical uses should be restricted to short-lived isotopes because of disposal problems presented by long-lived isotopes.

The NRC has considered the two opposing comments and has determined the following:

(1) The resulting radiation dose from the capsules to workers, patients, and the public is very low (see Regulatory Analysis).

(2) The impacts associated with any releases of ^{14}C to the surrounding environment are expected to be very small and the expected risks are minimal (see Environmental Assessment). Similarly, the small doses from naturally occurring ^{14}C are of little significance to human health and the environment. Also, the Commission concludes that the potential long-term impacts from widespread releases of the long-lived ^{14}C (5,730-year radiological half-life) from breath tests are insignificant.

Comments From Advisory Committee on the Medical Uses of Isotopes

This petition was discussed with NRC's Advisory Committee on the Medical Uses of Isotopes (ACMUI) at its October 1995 meeting. The ACMUI indicated that it endorsed the wide availability of this diagnostic test and that the radioactive drug could be used under a general license or an exemption, whichever the NRC may determine to be procedurally easier.

II. Discussion

Regulatory Issue

The regulatory issue is whether capsules containing one microcurie of carbon-14 urea present a sufficiently small radiation risk that they can be safely distributed to any person (including physicians who are not ''authorized users'' under Part 35).

Current NRC Regulations for the Manufacture and Commercial Distribution of Radioactive Drugs Containing Byproduct Material

NRC regulations in 10 CFR 32.72 address the manufacture, preparation, or transfer for commercial distribution of radioactive drugs containing byproduct material. This regulation requires manufacturers or preparers of radioactive drugs for commercial distribution to be:

(1) Registered or licensed with the U.S. Food and Drug Administration (FDA) as a drug manufacturer;

(2) Registered or licensed with a State agency as a drug manufacturer;

(3) Licensed as a pharmacy by a State Board of Pharmacy; or

(4) Operating as a nuclear pharmacy within a Federal medical institution.

These facilities have a specific license with the NRC. Under the specific license, the manufacturer or pharmacy can distribute radioactive drugs only to persons authorized pursuant to Part 35, ''Medical Use of Byproduct Material.''

Current NRC Regulations for the Medical Use of Radioactive Drugs Containing Byproduct Material

Currently, 10 CFR Part 35 only permits physicians who are authorized users (e.g., physicians who meet certain training and experience criteria regarding the safe use of radioactive drugs) or persons working under the supervision of an authorized user to administer radioactive drugs for medical use. The Agreement States have similar requirements.

Current NRC Regulations on Exemptions From Licensing

Existing exemptions from licensing requirements for the use of byproduct material include exemptions for specific products (e.g., time pieces), exemption for classes of products (e.g., gas and aerosol detectors) and broader materials exemptions in § 30.14, ''Exempt concentrations,'' and § 30.18, ''Exempt quantities.'' These two broad materials exemptions specifically exclude the transfer of byproduct material contained in any food, beverage, cosmetic, drug, or any product designed for ingestion or inhalation by, or application to, a human being. (In the case of exempt quantities, this prohibition is contained in § 32.18, ''Manufacture, distribution and transfer of exempt quantities of byproduct material; Requirements for a license,'' § 32.18(b)).

Capsules containing one microcurie of carbon-14 urea would not qualify as an ''exempt quantity'' in accordance with § 30.18 because of their intended use (as a drug) even though they contain a smaller quantity than that set forth in § 30.71, Schedule B. This use is outside the intent of the exemption currently in § 30.18. It would introduce needless complexity to the regulations and confusion to accommodate this unique use under the aforementioned sections.

However, because the capsules present an insignificant radiological risk to the public and the environment, the NRC believes they could be distributed to persons exempt from licensing for ''in vivo'' diagnostic use.

Proposed Amendments for Permitting the Distribution of the Capsules to Persons Exempt From Licensing

Proposed Amendment to 10 CFR Part 32

The regulations in 10 CFR Part 32 would be amended to add a new § 32.21, to provide requirements for a specific license to manufacture, prepare, process, produce, package, repackage, or transfer for commercial distribution capsules containing one microcurie of carbon-14 urea, as a radioactive drug, to be distributed to any person for ''in vivo'' diagnostic use. These requirements are consistent with the existing requirements on other items under the heading ''Exemptions'' in 10 CFR Part 30. The proposed regulation would include a reminder that licensees distributing the radioactive drug to persons exempt from licensing would not be relieved from other applicable Federal (e.g., FDA) or State

requirements governing the manufacture and distribution of drugs.

The NRC has decided that the manufacture or preparation of capsules containing one microcurie of carbon-14 urea should continue to be prepared by persons who meet the current NRC regulations to manufacture and commercially distribute radioactive drugs. The NRC believes regulatory control is needed to provide high confidence that the drug contains only one microcurie of carbon-14 urea and does not contain any other radioactive contaminants.

Proposed Amendment for Exempting ''Any Person'' From Licensing Requirements To Receive the Drug

Proposed Amendment to 10 CFR Part 30

The NRC has determined that the drug in capsule form presents no significant radiological safety or environmental risk, and that it is not necessary to regulate the use of this drug for its radioactive component. Therefore, the NRC can not justify requiring physicians, or any other person, to meet NRC training and experience criteria directed at the safe use of radioactive drugs, or to become an ''authorized user.'' Hence, the capsules can be distributed to any person. However, other Federal or State agencies may limit the receipt and use of the capsules in accordance with their own requirements.

The regulations in 10 CFR Part 30 would be amended to add a new § 30.21, to permit any person to receive, possess, use, transfer, own, or acquire for ''in vivo'' diagnostic use, capsules containing one microcurie of carbon-14 urea without a license. The proposed regulation would include a reminder that persons receiving the capsules would not be relieved from other Federal or State law governing drugs. Further, in accordance with the NRC's provisions for research involving human subjects (10 CFR 35.6), the exemption permitting receipt and use of the capsules for ''in vivo'' diagnostic use does not extend to use of the capsules for research involving human subjects. Any person desiring to use the capsules for human research would still be required to submit an application for a specific license under Part 35 in order to protect human subjects.

The phrase ''in vivo diagnostic use'' is being used in § 30.21 instead of ''medical use'' for two reasons. First, the term ''medical use'' has a specific meaning and is defined in § 35.2 to mean ''the intentional internal or external administration of byproduct material or the radiation therefrom to patients or human research subjects under the supervision of an authorized user.'' This term would be inappropriate because:

(1) ''Medical use'' limits administration to authorized users; use of this drug would not be so limited; and

(2) ''Medical use'' includes the administration of the drug to a human research subject, which would be prohibited by this rulemaking.

Effects of the Proposed Amendments

The effect of these proposed amendments would be to make the drug available to any person, for ''in vivo'' diagnostic use, without need for an NRC or Agreement State license. Because the receipt and use of the drug would be exempt from NRC licensing, Agreement States would need to make appropriate provisions in their regulations to recognize the exempt distribution of the drug, for ''in vivo'' diagnostic use. Thus, after the manufacture and distribution of the drug, the NRC and the Agreement States would not regulate the use of the drug as long as its use was for ''in vivo'' diagnostic use. This means that, under NRC and Agreement State regulations, primary-care physicians would not need to be ''authorized users'' in order to administer the drug, and would not necessarily need to refer their patients to nuclear medicine physicians. This should result in cost savings to patients. Other Federal and State organizations with responsibilities for regulating drugs would be left to determine and regulate who could receive and use the drug for ''in vivo'' diagnostic use. NRC would regulate the use of the drug for research involving human subjects under a specific Part 35 license.

III. Summary of Proposed Amendments

Manufacturer and Distributors

A new section would be added to 10 CFR Part 32 to permit the distribution of the capsules to persons who are exempt from licensing.

Section 32.21 Radioactive Drug: Manufacture, Preparation, or Transfer for Commercial Distribution of Carbon-14 Urea Capsules Not Exceeding One Microcurie Each for ''In Vivo'' Diagnostic Use for Humans to Persons Exempt From Licensing; Requirements for a License

Paragraph (a)

This paragraph would establish the requirements for approval of a license application to manufacture, prepare, process, produce, package, repackage, or transfer for commercial distribution carbon-14 urea capsules not exceeding one microcurie each for ''in vivo'' diagnostic use, to persons exempt from licensing.

Paragraph (a)(1)

This paragraph would limit issuance of an ''exempt distribution license'' for distribution of the capsules to persons exempt from licensing to only those who possess either a NRC or Agreement State ''specific license'' for possession and use of byproduct material.

Paragraph (a)(2)

To assure that the capsules contain no more than one microcurie of carbon-14 and present no other radiological risks, this paragraph would require that the persons manufacturing and/or commercially distributing the capsules for ''in vivo'' diagnostic use must also meet the requirements of § 32.72(a)(2). Specifically, these persons must be:

(1) Registered with or licensed by the FDA as a drug manufacturer; or

(2) Registered with or licensed by a state agency as a drug manufacturer; or

(3) Licensed as a pharmacy by a State Board of Pharmacy; or

(4) Operating as a nuclear pharmacy within a Federal medical institution.

Paragraph (a)(3)

This paragraph would require applicants to provide evidence that each carbon-14 urea capsule will not exceed one microcurie. The NRC's evaluation that the capsules would not result in significant radiation risks was based on the capsules containing one microcurie of carbon-14 urea. Therefore, applicants must demonstrate that the activity of each carbon-14 capsule will not exceed one microcurie.

Paragraph (a)(4)

This paragraph would prohibit carbon-14 urea from being contained in any food, beverage, cosmetic, drug or other commodity designed for ingestion or inhalation by, or topical application to, a human being except for the capsules as described in this section, because exempt distribution of this drug has only been evaluated for ''in vivo'' diagnostic use in the form of a capsule containing one microcurie of carbon-14 urea. Because of the capsule's ''in vivo'' diagnostic use, there is no prohibition against the capsule being combined with food or beverage at the time of administration so that the capsule can be ingested by the patient.

Paragraph (a)(5)

Because the exempt distribution of this drug has only been evaluated for ''in vivo'' diagnostic use in the form of a capsule containing one microcurie of

carbon-14 urea, this paragraph would prohibit incorporation of the capsules into any manufactured or assembled commodity, product, or device intended for commercial distribution. Further, although the drug is being distributed to persons exempt from licensing, this paragraph would require the carbon-14 urea to be identified as radioactive because the drug is being used for its radioactive content; therefore, the end user must be provided with information that the drug contains a radioactive material.

Paragraph (a)(6)

As with any product approved for distribution to persons exempt from licensing, this paragraph would require persons who apply for a license to manufacture or commercially distribute these capsules to submit copies of prototype labels or brochures for NRC approval. This will allow the NRC to confirm that the labels or brochures meet the requirements of § 32.21a (a) and (b).

Paragraph (b)

This paragraph declares that the regulations do not relieve licensees or license applicants from complying with applicable FDA, other Federal, and State requirements governing the manufacture and distribution of drugs.

Section 32.21a Same: Conditions of License

This section would establish the conditions required for a license to commercially distribute the capsules to persons exempt from licensing.

Paragraph (a)

To inform the end user of the identity of the radioisotope, the physical and chemical form, and the dosage of radioactivity, this paragraph would establish that the immediate container of each capsule or capsules must bear a durable, legible label that:

(1) Identifies the radioisotope, the physical and chemical form of the radioisotope, the quantity of radioactivity contained in each container at a specific date; and

(2) Bears the words ''Radioactive Material.''

The date requirement is consistent with labeling requirements for other radioactive drugs with a half life of greater than 100 days.

Paragraph (b)

This paragraph would establish that, consistent with the intended use of the capsules, the label affixed to the immediate container, or an accompanying brochure, must:

(1) State that the contents are exempt from NRC or Agreement State licensing requirements;

(2) Bear the words ''Radioactive Material. For ''In Vivo'' Diagnostic Use Only. This Material Is Not To Be Used for Research Involving Human Subjects, and Must Not Be Introduced into Foods, Beverages, Cosmetics, or Other Drugs or Medicinals, or into Products Manufactured for Commercial Distribution.''

The intent of the requirement set out in (b)(2) is to make clear that the capsule must remain in the form of a capsule and is not to be combined with one of the listed items such as food or beverages which would result in a radioactive product other than in the form of a capsule for commercial distribution. Because of the capsule's ''in vivo'' diagnostic use, there is no prohibition against the capsule being combined with food or beverage at the time of administration so that the capsule can be ingested by the patient.

''In Vivo'' Diagnostic Use by Persons Exempt From Licensing

A new section would be added to 10 CFR Part 30 to exempt any person from NRC or the Agreement State regulations to receive the drug for ''in vivo'' diagnostic use for humans.

Section 30.21 Radioactive Drug: Capsules Containing One Microcurie of Carbon-14 Urea for ''In Vivo'' Diagnostic Use for Humans Would Be Added To Permit any Person To Receive the Capsules

Paragraph (a)

This paragraph would provide an exemption to any person from the requirements for a license to receive, possess, use, transfer, own, or acquire capsules containing one microcurie of carbon-14 urea for ''in vivo'' diagnostic purposes. It should be noted that the ''transfer'' in this paragraph does not include ''transfer for commercial distribution,'' which is covered in paragraph (c) below.

Paragraph (b)

This paragraph would establish that persons exempt from licensing would be prohibited from using the drug for research involving humans subjects. A specific Part 35 license would be needed to use the drug in any research involving human subjects.

Paragraph (c)

This paragraph would specify that a specific license is needed to manufacture, prepare, process, produce, package, repackage or transfer such capsules for commercial distribution.

Paragraph (d)

This paragraph declares that the regulations do not relieve end users from complying with applicable FDA, other Federal, or State requirements governing the receipt, administration, and use of drugs.

IV. Agreement State Compatibility

Under the Atomic Energy Act, certain regulatory functions are reserved to the NRC. Among these are the distribution of products to persons exempt from licensing, as discussed in 10 CFR Part 150. Hence, the proposed rule, if adopted, would be a Division 4 item of compatibility, with regard to the manufacture and commercial distribution of the capsules (10 CFR Part 32). Because of the need for nationwide consistency in the use of products which are widely distributed, the proposed rule, if adopted, would be a Division 1 item of compatibility with regard to possession and use (10 CFR Part 30). Therefore, the Agreement States will need to make appropriate provisions in their regulations to allow any person to receive capsules containing one microcurie of carbon-14 urea for ''in vivo'' diagnostic use without need for a license.

V. Electronic Access

Comments may be submitted electronically, in either ASCII text or WordPerfect format (version 5.1 or later), by calling the NRC Electronic Bulletin Board on FedWorld or connecting to the NRC interactive rulemaking web site, ''Rulemaking Forum.'' The bulletin board may be accessed using a personal computer, a modem, and one of the commonly available communications software packages, or directly via Internet.

If using a personal computer and modem, the NRC subsystem on FedWorld can be accessed directly by dialing the toll free number: 1–800–303–9672. Communication software parameters should be set as follows: parity to none, data bits to 8, and stop bits to 1 (N,8,1). Using ANSI or VT–100 terminal emulation, the NRC NUREGs and Reg Guides for Comment subsystem can then be accessed by selecting the ''Rules Menu'' option from the ''NRC Main Menu.'' For further information about options available for NRC at FedWorld, consult the ''Help/Information Center'' from the ''NRC Main Menu.'' Users will find the ''FedWorld Online User's Guides'' particularly helpful. Many NRC subsystems and databases also have a ''Help/Information Center'' option that is tailored to the particular subsystem.

The NRC subsystem on FedWorld can also be accessed by a direct-dial telephone number for the main FedWorld BBS, 703–321–3339, or by using Telnet via Internet, fedworld.gov. If using 703–321–3339 to contact FedWorld, the NRC subsystem will be accessed from the main FedWorld menu by selecting the ''Regulatory, Government Administration and State Systems,'' then selecting ''Regulatory Information Mall.'' At that point, a menu will be displayed that has an option ''U.S. Nuclear Regulatory Commission'' that will take you to the NRC Online main menu. The NRC Online area also can be accessed directly by typing ''/go nrc'' at a FedWorld command line. If you access NRC from FedWorld's main menu, you may return to FedWorld by selecting the ''Return to FedWorld'' option from the NRC Online Main Menu. However, if you access NRC at FedWorld by using NRC's toll-free number, you will have full access to all NRC systems but you will not have access to the main FedWorld system.

If you contact FedWorld using Telnet, you will see the NRC area and menus, including the Rules menu. Although you will be able to download documents and leave messages, you will not be able to write comments or upload files (comments). If you contact FedWorld using FTP, all files can be accessed and downloaded but uploads are not allowed; all you will see is a list of files without descriptions (normal Gopher look). An index file listing all files within a subdirectory, with descriptions, is included. There is a 15-minute time limit for FTP access.

Although FedWorld can be accessed through the World Wide Web, like FTP that mode only provides access for downloading files and does not display the NRC Rules menu.

You may also access the NRC's interactive rulemaking web site through the NRC home page (http://www.nrc.gov). This site provides the same access as the FedWorld bulletin board, including the facility to upload comments as files (any format), if your web browser supports that function.

For more information on NRC bulletin boards call Mr. Arthur Davis, Systems Integration and Development Branch, U.S. Nuclear Regulatory Commission, Washington, DC 20555, telephone (301) 415–5780; e-mail AXD3@nrc.gov. For information about the interactive rulemaking site, contact Ms. Carol Gallagher, (301) 415–6215; e-mail CAG@nrc.gov.

VI. Finding of No Significant Environmental Impact: Availability

The Commission has determined under the National Environmental Policy Act of 1969, as amended, and the Commission's regulations in Subpart A of 10 CFR Part 51, that the proposed amendments, if adopted, would not be a major Federal action significantly affecting the quality of the human environment; therefore, an environmental impact statement is not required. The proposed rule would establish requirements for the manufacture and commercial distribution of ^{14}C-urea capsules to persons exempt from licensing and establish regulations to permit any person to receive the capsules without an NRC license. The Commission believes that the radioactive component of this drug presents no significant radiation risk and, therefore, regulatory control of the ''in vivo'' diagnostic use of the capsules for radiation safety is not necessary. It is expected that this proposed rule, if adopted, would not cause any significant increase in radiation exposure to the public or radiation release to the environment beyond the exposures or releases resulting from the use of the Carbon-14 capsules under the current regulations. Also, it is expected that there would be no non-radiological impacts if the proposed rule is adopted.

The draft environmental assessment and finding of no significant impact on which this determination is based is available for inspection at the NRC Public Document Room, 2120 L Street NW., (Lower Level), Washington, DC. Single copies of the draft environmental assessment and the finding of no significant impact are available from Dr. Anthony N. Tse, Office of Nuclear Regulatory Research, U.S. Nuclear Regulatory Commission, Washington, DC 20555–0001, telephone (301) 415–6233 or e-mail at ANT@nrc.gov.

VII. Paperwork Reduction Act Statement

This proposed rule amends information collection requirements that are subject to the Paperwork Reduction Act of 1995 (44 U.S.C. 3501 *et seq.*). This rule has been submitted to the Office of Management and Budget for review and approval of the information collection requirements.

The public reporting burden for this collection of information is estimated to average 16 hours per response, including the time for reviewing instructions, searching existing data sources, gathering and maintaining the data needed, and completing and reviewing the collection of information. The Nuclear Regulatory Commission is seeking public comment on the potential impact of the collection of information contained in the proposed rule and on the following issues:

1. Is the proposed collection of information necessary for the proper performance of the functions of the NRC, including whether the information will have practical utility?
2. Is the estimate of the burden correct?
3. Is there a way to enhance the quality, utility, and the clarity of the information to be collected?
4. How can the burden of the collection of information be minimized, including the use of automated collection techniques?

Send comments on any aspect of this proposed information collection, including suggestions for reducing the burden, to the Information and Records Management Branch (T–6 F33), U.S. Nuclear Regulatory Commission, Washington, DC 20555–0001, or by Internet electronic mail at BJS1@NRC.GOV; and to the Desk Officer, Office of Information and Regulatory Affairs, NEOB–10202, (3150–0001, 3150–0017, and 3150–0120), Office of Management and Budget, Washington, DC 20503.

Comments to OMB on the information collections or on the above issues should be submitted by July 16, 1997. Comments received after this date will be considered if it is practical to do so, but assurance of consideration cannot be given to comments received after this date.

Public Protection Notification

The NRC may not conduct or sponsor, and a person is not required to respond to, a collection of information unless it displays a currently valid OMB control number.

VIII. Regulatory Analysis

The NRC has prepared a regulatory analysis for the proposed rule. The analysis examines the benefits and impacts considered by the NRC. The regulatory analysis is available for inspection at the NRC Public Document Room, 2120 L Street NW. (Lower Level), Washington, DC. Single copies of the regulatory analysis are available from Dr. Anthony N. Tse, Office of Nuclear Regulatory Research, U.S. Nuclear Regulatory Commission, Washington, DC 20555–0001, telephone (301) 415–6233 or e-mail at ANT@nrc.gov.

IX. Regulatory Flexibility Certification

As required by the Regulatory Flexibility Act of 1980, 5 U.S.C. 605(b),

the Commission certifies that this rule does not have a significant economic impact upon a substantial number of small entities. The proposed rule would permit physicians and other health care providers to use an additional diagnostic test without having to obtain an NRC license, thus, would provide cost savings to patients, insurers, and the health care industry. Any small entity subject to this regulation which determines that, because of its size, it is likely to bear a disproportionate adverse economic impact should notify the Commission of this in a comment that indicates the following:

(a) The licensee's size and how the regulation would result in a significant economic burden upon the licensee as compared to the economic burden on a larger licensee.

(b) How the regulations could be modified to take into account the licensee's differing needs or capabilities.

(c) The benefits that would accrue, or the detriments that would be avoided, if the regulations were modified as suggested by the licensee.

(d) How the regulation, as modified, would more closely equalize the impact of regulations or create more equal access to the benefits of Federal programs as opposed to providing special advantages to any individual or group.

(e) How the regulation, as modified, would still adequately protect public health and safety.

X. Backfit Analysis

The NRC has determined that the backfit rule, 10 CFR 50.109, does not apply to this rule, and therefore, a backfit analysis is not required because these amendments do not involve any provisions that would impose backfits as defined in 10 CFR 50.109(a)(1).

List of Subjects

10 CFR Part 30

Byproduct material, Criminal penalties, Government contracts, Intergovernmental relations, Isotopes, Nuclear materials, Radiation protection, Reporting and record keeping requirements.

10 CFR Part 32

Byproduct material, Criminal penalties, Labeling, Nuclear materials, Radiation protection, Reporting and recordkeeping requirements.

For the reasons set out in the preamble and under the authority of the Atomic Energy Act of 1954, as amended, the Energy Reorganization Act of 1974, as amended, and 5 U.S.C. 553, the NRC is proposing to adopt the following amendments to 10 CFR Parts 30 and 32.

PART 30—RULES OF GENERAL APPLICABILITY TO DOMESTIC LICENSING OF BYPRODUCT MATERIAL

1. The authority citation for Part 30 continues to read as follows:

Authority: Secs. 81, 82, 161, 182, 183, 186, 68 Stat. 935, 948, 953, 954, 955, as amended, sec. 234, 83 Stat. 444, as amended (42 U.S.C. 2111, 2112, 2201, 2232, 2233, 2236, 2282); secs. 201, as amended, 202, 206, 88 Stat. 1242, as amended, 1244, 1246 (42 U.S.C. 5841, 5842, 5846).

Section 30.7 also issued under Pub. L. 95–601, sec.10, 92 Stat. 2951 as amended by Pub. L. 102–486, sec. 2902, 106 Stat. 3123, (42 U.S.C. 5851). Section 30.34(b) also issued under sec. 184, 68 Stat. 954, as amended (42 U.S.C. 2234). Section 30.61 also issued under sec. 187, 68 Stat. 955 (42 U.S.C. 2237).

2. In § 30.8, paragraph (b) is revised to read as follows:

§ 30.8 Information collection requirements: OMB approval.

* * * * *

(b) The approved information collection requirements contained in this part appear in §§ 30.9, 30.11, 30.15, 30.18, 30.19, 30.20, 30.21, 30.32, 30.34, 30.35, 30.36, 30.37, 30.38, 30.41, 30.50, 30.51, 30.55, appendices A and C to this part.

* * * * *

3. A new § 30.21 is added under the undesignated center heading ''Exemptions'' to read as follows:

§ 30.21 Radioactive drug: Capsules containing one microcurie of carbon-14 urea for ''in vivo'' diagnostic use for humans.

(a) Except as provided in paragraphs (b) and (c) of this section, any person is exempt from the requirements for a license set forth in Section 81 of the Act and from the regulations in this part and part 35 of this chapter provided that such person receives, possesses, uses, transfers, owns, or acquires carbon-14 urea capsules, not exceeding one microcurie each, for ''in vivo'' diagnostic use for humans.

(b) Any person who desires to use the capsules for research involving human subjects shall apply for and receive a specific license pursuant to part 35 of this chapter.

(c) Any person who desires to manufacture, prepare, process, produce, package, repackage, or transfer for commercial distribution such capsules shall apply for and receive a specific license pursuant to § 32.21 of this chapter.

(d) Nothing in this section relieves persons from complying with applicable FDA, other Federal, and State requirements governing receipt, administration, and use of drugs.

PART 32—SPECIFIC DOMESTIC LICENSES TO MANUFACTURE OR TRANSFER CERTAIN ITEMS CONTAINING BYPRODUCT MATERIAL

4. The authority citation for Part 32 continues to read as follows:

Authority: Secs. 81, 161, 182, 183, 68 Stat. 935, 948, 953, 954, as amended (42 U.S.C. 2111, 2201, 2232, 2233); sec. 201, 88 Stat. 1242, as amended (42 U.S.C. 5841).

5. In § 32.8, paragraph (b) is revised to read as follows:

§ 32.8 Information collection requirements: OMB approval.

* * * * *

(b) The approved information collection requirements contained in this part appear in §§ 32.11, 32.12, 32.14, 32.15, 32.16, 32.17, 32.18, 32.19, 32.20, 32.21, 32.21a, 32.22, 32.23, 32.25, 32.26, 32.27, 32.29, 32.51, 32.51a, 32.52, 32.53, 32.54, 32.55, 32.56, 32.57, 32.58, 32.61, 32.62, 32.71, 32.72, 32.74, and 32.210.

* * * * *

6. A new § 32.21 is added to read as follows:

§ 32.21 Radioactive drug: Manufacture, preparation, or transfer for commercial distribution of carbon-14 urea capsules not exceeding one microcurie each for ''in vivo'' diagnostic use for humans to persons exempt from licensing; Requirements for a license.

(a) An application for a specific license to manufacture, prepare, process, produce, package, repackage, or transfer for commercial distribution carbon-14 urea capsules not exceeding one microcurie each for ''in vivo'' diagnostic use, to persons exempt from licensing under § 30.21 or the equivalent regulations of an Agreement State will be approved if:

(1) The applicant satisfies the general requirements specified in § 30.33 of this chapter, provided that the requirements of § 30.33(a) (2) and (3) of this chapter do not apply to an application for a license to transfer byproduct material manufactured, prepared, processed, produced, packaged, or repackaged pursuant to a license issued by an Agreement State;

(2) The applicant meets the requirements under § 32.72(a)(2);

(3) The applicant provides evidence that each carbon-14 urea capsule will not exceed one microcurie;

(4) The carbon-14 urea is not contained in any food, beverage, cosmetic, drug (except as described in this section) or other commodity designed for ingestion or inhalation by, or topical application to, a human being;

(5) The carbon-14 urea is in the form of a capsule, identified as radioactive,

and to be used for its radioactive properties, but is not incorporated into any manufactured or assembled commodity, product, or device intended for commercial distribution; and

(6) The applicant submits copies of prototype labels and brochures and the NRC approves these labels and brochures.

(b) Nothing in this section relieves the licensee from complying with applicable FDA, other Federal, and State requirements governing drugs.

7. A new § 32.21a is added to read as follows:

§ 32.21a Same: Conditions of license.

Each license issued under § 32.21 is subject to the following conditions:

(a) The immediate container of the capsule(s) must bear a durable, legible label which:

(1) Identifies the radioisotope, the physical and chemical form, the quantity of radioactivity of each capsule at a specific date; and

(2) Bears the words ''Radioactive Material.''

(b) In addition to the labeling information required by paragraph (a) of this section, the label affixed to the immediate container, or an accompanying brochure also must:

(1) State that the contents are exempt from NRC or Agreement State licensing requirements; and

(2) Bear the words ''Radioactive Material. For 'In Vivo' Diagnostic Use Only. This Material Is Not To Be Used for Research Involving Human Subjects and Must Not Be Introduced into Foods, Beverages, Cosmetics, or Other Drugs or Medicinals, or into Products Manufactured for Commercial Distribution.''

Dated at Rockville, Maryland this 10th day of June, 1997.

For the Nuclear Regulatory Commission.

John C. Hoyle,

Secretary of the Commission.

[FR Doc. 97–15697 Filed 6–13–97; 8:45 am]

BILLING CODE 7590–01–P

DEPARTMENT OF STATE

Bureau of Consular Affairs

22 CFR Part 22

[Public Notice 2555]

Schedule of Fees for Consular Services, Department of State and Overseas Embassies and Consulates, Diversity Lottery Fee

AGENCY: Bureau of Consular Affairs, State.

ACTION: Proposed rule.

SUMMARY: On September 30, 1996, the Immigration and Nationality Act (INA) was amended by section 636 of the Illegal Immigration Reform and Immigrant Responsibility Act of 1996, (IIRIRA) to authorize the collection of a fee for administering the diversity immigrant visa lottery. The Department is, therefore, amending their regulations accordingly by instituting a $75.00 fee, in the nature of a surcharge, to be paid by applicants issued diversity immigrant visas. Collection of the fee would commence as of October 1, 1997.

DATES: Written comments should be received by July 16, 1997. The anticipated effective date of the final rule is October 1, 1997.

ADDRESSES: Interested persons are invited to submit comments to: Office of the Executive Director, Bureau of Consular Affairs, Room 4820A, Department of State, Washington, D.C. 20520.

FOR FURTHER INFORMATION CONTACT: Sally Light, Office of the Executive Director, Bureau of Consular Affairs, telephone (202) 647–1148; telefax (202) 647–3677.

SUPPLEMENTARY INFORMATION: The Department is instituting a new fee, in the nature of a surcharge, to be paid by applicants for diversity immigrant visas. This additional fee will recover the full costs of the visa lottery conducted pursuant to INA 203 and 222, 8 U.S.C. 1153, 1202, from those successful lottery entrants who actually apply for diversity visas. The fee was authorized by section 636 of the Illegal Immigration Reform and Immigrant Responsibility Act of 1996, Pub. L. 104–208, 110 Stat. 3009–703–704 (Sept. 30, 1996). A single fee imposed on actual diversity visa applicants will ensure that the costs of administering the lottery and allocating diversity visas are recovered from actual users of the lottery, while avoiding the impracticable imposition of a fee on all visa lottery entrants (technically, visa ''petitioners''). The imposition of a fee on all entrants rather than actual applicants is not feasible, given the millions of entrants, the problems of collecting a uniform fee from individuals all over the world (who will have varying access to U.S. or other international currency), and the burden of having to collect and account for what would be a very small fee from a large number of persons. Roughly seven million entrants have entered the 1998 diversity lottery. Approximately 100,000 of those will be invited to apply for a visa, and of those, approximately 87,000 will apply and pay the fee. The Department's projected cost to administer the 1998 diversity lottery is about $6,500,000, which will be covered by the diversity visa surcharge of $75.00

Provision has already been made in the visa regulations (22 CFR 42.33(i)) governing the diversity visa lottery for a fee of this nature. (See 61 FR 1523.) Thus no regulatory amendments other than an addition of the Schedule of Fees for Consular Services published at 22 CFR 22.1 are required to establish this fee. The new fee is being added as item number 19 on the Schedule of Fees. This will locate it immediately before the other fees for immigrant visas, which diversity visa applicants will also be required to pay (i.e., before the fees for immigrant visa application and issuance).

With the exception of nonimmigrant visa reciprocity fees, which are established based on the practices of other countries, all consular fees are established on a basis of cost recovery and in a manner consistent with general user charges principles, regardless of the specific statutory authority under which they are promulgated. The proposed fee is consistent with these principles and the guidance in OMB Circular A–25, which addressed the establishment of user charges. The fee is based on a cost-of-service study using fiscal year 1995 data that documented and projected into fiscal year 1998 the direct and indirect costs associated with administration of the diversity visa lottery, so as to capture the full cost of service.

Proposed Rule

This rule is not considered to be a major rule for purposes of E.O. 12291, nor is it expected to have a significant impact on a substantial number of small entities under the criteria of the regulatory Flexibility Act, 5 U.S.C. 605(b). This rule does not impose information collection requirements under the provisions of the Paperwork Reduction Act, 44 U.S.C. Chapter 35. This rule has been reviewed as required by E.O. 12988 and determined to be in compliance therewith. This rule is exempt from review under E.O. 12866, but has been reviewed internally by the Department to ensure consistency with the objectives thereof.

List of Subjects in 22 CFR Part 22

Fees, Foreign Service, Passports and visas, Schedule of fees for consular services.

In view of the foregoing, 22 CFR is proposed to be amended as follows:

PART 22—[AMENDED]

1. The authority citation for Part 22 is revised to read:

Authority: Sec. 3, 63 Stat. 222, as amended; 22 U.S.C. 211a; 214, 2651, 2651a; 2921; 4219; 31 U.S.C. 9701; E.O. 10718, 22 FR 4632, 3 CFR, 1954–1958 Comp., p. 382; E.O. 11295, 31 FR 10603, 3 CFR, 1966–1970 Comp., p 570; sec. 636, Pub. L. 104–208, 110 Stat. 3009–703–704; 8 U.S.C. 1351; sec. 140(a), Pub. L. 103–236, 108 Stat. 399, as amended.

2. Section 22.1 is amended by revising the phrase ''(Item Nos. 15 through 19 vacant.)'' immediately following item 14 to read ''(Item Nos. 15 through 18 vacant.)'' and by inserting a new item 19 under the header ''Visa Services for Aliens'' to read as follows:

§ 22.1 Schedule of fees.

Item No.	Fee
* * * * *	
Visa Services for Aliens	
19. Immigrant visa application surcharge for Diversity Visa Lottery	$75.00
* * * * *	

Dated: June 2, 1997.

Patrick F. Kennedy,

Under Secretary for Management.

[FR Doc. 97–15555 Filed 6–13–97; 8:45 am]

BILLING CODE 4710–06–P

ENVIRONMENTAL PROTECTION AGENCY

40 CFR Part 52

[SC 33–1–9714b; FRL–5840–4]

Approval and Promulgation of State Implementation Plan, South Carolina: Adoption of General Conformity Rules

AGENCY: Environmental Protection Agency (EPA).

ACTION: Proposed rule.

SUMMARY: On November 8, 1996, the South Carolina Department of Health and Environmental Control submitted revisions to the South Carolina State Implementation Plan (SIP) concerning the adoption of criteria and procedures for demonstrating and assuring the ''Conformity of General Federal Actions.'' In the final rules section of this **Federal Register**, the EPA is approving the State of South Carolina's SIP revision as a direct final rule without prior proposal because the Agency views this as a noncontroversial revision amendment and anticipates no adverse comments. A detailed rationale for the approval is set forth in the direct final rule. If no adverse comments are received in response to that direct final rule, no further activity is contemplated in relation to this proposed rule. If EPA receives adverse comments, the direct final rule will be withdrawn and all public comments received will be addressed in a subsequent final rule based on this proposed rule. The EPA will not institute a second comment period on this document. Any parties interested in commenting on this document should do so at this time.

DATES: To be considered, comments on this proposed action must be received by July 16, 1997.

ADDRESSES: Written comments on this action should be addressed to Mr. Gregory Crawford at the EPA Regional Office listed below.

Copies of the documents relative to this action are available for public inspection during normal business hours at the following locations. The interested persons wanting to examine these documents should make an appointment with the appropriate office at least 24 hours before the visiting day.

Air and Radiation Docket and Information Center (Air Docket 6102), U.S. Environmental Protection Agency, 401 M Street, SW, Washington DC 20460.

Environmental Protection Agency, Region 4 Air Planning Branch 61 Forsyth Street, SW, Atlanta, Georgia 30303.

South Carolina Department of Health and Environmental Control, 600 Bull Street, Columbia, South Carolina 29201–1708.

FOR FURTHER INFORMATION CONTACT: Mr. Gregory Crawford, Regulatory Planning Section, Air Planning Branch, Air, Pesticides, and Toxics Management Division, Region 4, Environmental Protection Agency, 61 Forsyth Street SW, Atlanta, Georgia 30303. The telephone number is 404/562–9042.

SUPPLEMENTARY INFORMATION: For additional information see the direct final rule which is published in the rules section of this **Federal Register**.

Dated: May 19, 1997.

A. Stanley Meiburg,

Acting Regional Administrator

[FR Doc. 97–15731 Filed 6–13–97; 8:45 am]

BILLING CODE 6560–50–P

DEPARTMENT OF TRANSPORTATION

National Highway Traffic Safety Administration

49 CFR Part 571

[Docket No. 97–40; Notice 1]

RIN 2127–AF87, 2127–AF88

Federal Motor Vehicle Safety Standards; Windshield Defrosting and Defogging Systems; Windshield Wiping and Washing Systems

AGENCY: National Highway Traffic Safety Administration (NHTSA), DOT.

ACTION: Terminations of rulemaking.

SUMMARY: In April 1996, NHTSA set forth alternative proposals for amending the Federal Motor Vehicle Safety Standards on windshield defrosting and defogging systems and on windshield washing and wiping. The proposals (61 FR 15446 and 15449, April 8, 1996) were undertaken as part of NHTSA's efforts to implement the President's Regulatory Reinvention Initiative to eliminate unnecessary Federal Regulations. In this notice, NHTSA terminates rulemaking on both Standards because the comments show that the current regulatory requirements are not imposing needless regulatory burdens.

FOR FURTHER INFORMATION CONTACT: For technical issues: Mr. Richard Van Iderstine, Office of Vehicle Safety Standards, NPS–21, telephone (202) 366–5280, FAX (202) 366–4329.

For legal issues: Ms. Dorothy Nakama, Office of Chief Counsel, NCC–20, telephone (202) 366–2992, FAX (202) 366–3820.

Both may be reached at the National Highway Traffic Safety Administration, 400 Seventh Street, S.W., Washington, D.C. 20590.

SUPPLEMENTARY INFORMATION:

Requirements of Standard No. 103

Standard No. 103's basic requirement, applicable to passenger cars, multipurpose passenger vehicles (MPVs), trucks, and buses, specifies that each vehicle shall have a windshield defrosting and defogging system.

Standard No. 103 also specifies performance requirements for the windshield defrosting and defogging systems, but only those in passenger cars. S4.2 of Standard No. 103 specifies that each passenger car windshield defrosting and defogging system shall meet specified provisions of SAE Recommended Practice J902 (SAE J902), ''Passenger Car Windshield Defrosting Systems,'' August 1964.

SAE J902 establishes uniform test procedures and minimum performance requirements for the ''critical area'' of the windshield and for the ''entire windshield.'' SAE J902 prescribes a laboratory evaluation of defroster systems during which a known quantity of water is sprayed on the windshield, forming an ice coating, to provide uniform and repeatable test results. However, while Standard No. 103 incorporates the test procedures and performance requirements of SAE J902, it does not incorporate the SAE J902's definition of ''critical area'' and ''entire windshield.'' Instead, Standard No. 103 substitutes areas of the windshield determined in accordance with Standard No. 104, ''Windshield Wiping and Washing Systems.'' It substitutes Area C from Standard No. 104 for the ''critical area'' and Area A for the ''entire windshield.''

Requirements of Standard No. 104

Standard No. 104 applies to passenger cars, multipurpose passenger vehicles (MPVs), trucks, and buses. Standard No. 104 specifies that each vehicle shall have a power-driven windshield wiping system that meets S4.1.1's requirement that each system shall have at least two speeds, each of which wipes at a different number of cycles per minute.

Standard No. 104 specifies additional wiping requirements for passenger cars, but not for the other vehicle types subject to the standard. The passenger car windshield areas to be wiped are specified in paragraphs S4.1.2 and S4.1.2.1 of the standard. S4.1.2 specifies three areas for passenger car windshields, designated as areas ''A'', ''B'', and ''C.'' A specified percentage of the glazing in each area is required to be wiped, as shown in Figures 1 and 2 of SAE Recommended Practice J903a, May 1966, which the standard incorporates by reference. The location of those areas is determined using the angles specified in Tables I, II, III, and IV of Standard No. 104, as applicable. Those tables apply to passenger cars of varying overall widths, namely, from less than 60 inches to more than 68 inches. The angles set forth in the tables vary according to the overall width of the vehicle. Finally, paragraph S4.1.2 provides that all of the glazing counted toward meeting the percentage of each area required to be wiped must lie within the area bounded by a perimeter line on the glazing surface one inch from the edge of the daylight opening.

Standard No. 104 also specifies requirements for windshield washing systems on passenger cars, MPVs, trucks, and buses. Each of those vehicles is required in S4.2.1 or S4.2.2 to have a windshield washing system that meets the requirements of SAE Recommended Practice J942 (SAE J942), ''Passenger Car Windshield Washing Systems,'' November 1965, with a few modifications.

NHTSA's Review of Standards No. 103 and 104 and Proposals for Change

Based on its review of Standards Nos. 103 and 104 under the President's Regulatory Reinvention Initiative, NHTSA sought public comments on three proposals for changes to each Standard. The proposals were: (1) rescinding each Standard; (2) upgrading the light truck and MPV requirements in each Standard to make them equivalent to the passenger car requirements; and (3) combining Standards Nos. 103 and 104 into a single safety standard and titling it ''*Windshield clearance systems*.'' NHTSA stated that since each proposal was relatively simple, it was not setting forth precise regulatory language for implementing the proposals. In addition to seeking comments on each of the three proposals, NHTSA also sought comment on the option of making no changes to each Standard.

The discussion for the three options for each of the Standards is summarized below.

1. Proposal One—Rescind Each Standard

NHTSA indicated in the NPRM that if it were to adopt this proposal, it would likely conclude that even if the Standard should be rescinded, manufacturers would continue to provide the equipment and performance specified by the Standard.

NHTSA noted that if Standard No. 103 or 104 were rescinded, the States could adopt regulations requiring windshield defrosting and defogging and/or wiping and washing systems or even regulate their performance. The States would be free to do so because the absence of a Standard would mean that there would no longer be any express preemption under 49 U.S.C. section 30103(b), Preemption, of State requirements different from those currently in Standards Nos. 103 or 104.

2. Proposal Two—Upgrade the MPV and Light Truck Requirements in Each Standard To Make Them Equivalent to the Passenger Car Requirements

NHTSA noted that it has amended some of its Standards to ensure that the public is afforded the same level of protection regardless of whether they ride in a passenger car, light truck, or MPV. For example, by model year 1998, the requirements for key Standards such as Standard No. 208, *Occupant crash protection*, and Standard No. 214, *Side impact protection*, will be virtually identical for passenger cars, light trucks, and MPVs.

In keeping with the trend to make Standard requirements uniform for all three of these types of vehicles, NHTSA would specify performance requirements in Standards No. 103 and 104 for light trucks and MPVs. As noted above, Standard No. 103 presently specifies no requirements for light trucks and MPVs, other than that they have a windshield defrosting and defogging system. Standard No. 104 presently specifies no windshield wiping requirements for light trucks and MPVs other than that they have a power driven windshield wiping and washing system, with at least two speeds, each wiping at a different rate.

For each proposal, NHTSA would establish minimum performance requirements for windshield defrosting and defogging systems or wiping and washing systems in light trucks and MPVs, including minimum requirements regarding the portions of the windshield that must be cleared. The proposal for each Standard was as follows:

Standard No. 103—The agency proposed to extend passenger car requirements in S4.3 to light trucks and MPVs. However, the minimum windshield areas to be defrosted for light trucks and MPVs might differ somewhat than those for passenger cars, since the windshields of these various vehicle types differ, and the driver views different windshield areas of each vehicle type while viewing the road ahead. Because of potential differences in windshield viewing areas between the passenger cars and other vehicle types, NHTSA sought public comment on extending S.4.3 to light trucks and MPVs.

NHTSA stated any minimum requirements for windshield defrosting in light trucks and MPVs would likely be based on the defrosted areas specified in SAE Recommended Practice J382 (SAE J382) ''Windshield Defrosting Systems Performance Requirements—Trucks, Buses, and Multipurpose Vehicle'' (January 1971). Paragraph 3.1 of SAE J382 describes the portions of the windshield that must be defrosted as follows: Area A (the largest area, encompassing both the driver's and front passenger's view), Area B (an area somewhat smaller than Area A) and Area C (the smallest area, in front of the driver), described in Table 1 of SAE J382.

NHTSA did not propose to extend Standard No. 103 to heavier trucks and

buses because it is not aware of an SAE or other standard for windshield defrosting and defogging systems on heavier trucks and buses. NHTSA therefore requested information whether there are any industry (or other) standards for windshield defrosting and defogging systems on trucks and buses with a gross vehicle weight rating (GVWR) over 10,000 lbs. NHTSA asked whether, if such a standard exists, the standard should be included in Standard No. 103, making Standard No. 103 apply to trucks and buses with a GVWR over 10,000 lbs.

Standard No. 104—To adopt equivalent requirements for light trucks and MPVs, whose windshields and driver seating positions may differ from those of passenger cars, NHTSA proposed to incorporate a different set of SAE recommended practices than those applicable to passenger cars.

For minimum windshield wiped area requirements for light trucks and MPVs, NHTSA proposed to incorporate relevant provisions of SAE Recommended Practice J198 (SAE J198) ''Windshield Wiper Systems—Trucks, Buses, and Multipurpose Vehicles'' January 1971. In Paragraph 3.1.1, SAE J198 describes the portions of the exterior windshield glazing surface that must be wiped as follows: area A (the largest area, encompassing both the driver's and front passenger's view), area B (an area somewhat smaller than area A) and area C (the smallest area, in front of the driver's view). Each area is established using angles in Table 1 of SAE J198 applied as shown in Figure 1 of SAE J198.

3. Proposal Three—Combining Standards Nos. 103 and 104

NHTSA's third proposal was to combine Standards Nos. 103 and 104 since they are already substantially interconnected. Standard No. 103 references tables in Standard No. 104 to establish the angles used in locating the defrosted areas. If the two standards were combined, the single standard would be titled ''windshield clearance systems.''

Summary of Public Comments

NHTSA received comments from fifteen commenters. The following commented on both Standards: Advocates for Highway and Auto Safety (Advocates), the American Automobile Manufacturers Assn., the Center for Auto Safety (CAS), Chrysler Corporation, the Coalition of Small Volume Automobile Manufacturers (COSVAM), The Flxible Corporation, the Houston Texas Transit Authority, National Association of State Directors of Pupil Transportation Services (NASDPTS), Subaru, Truck Manufacturers Assn. (TMA), Volkswagen, and Volvo. In addition, Mr. Bob Morrow, and Standard Motor Products, Inc. provided comments regarding Standard No. 103.

Advocates and CAS suggested that the NPRMs were in fact advance notices of proposed rulemaking because no proposed regulatory text for either Standard No. 103 or 104 was provided.

On the issue of whether the Standards should be rescinded, most commenters' views were similar to TMA's. TMA stated that although there would be no degradation of safety if Standards Nos. 103 or 104 were rescinded, the Standards should be retained in order to preempt the States from regulating windshields. NASDPTS, Subaru, and Volkswagen favored rescinding both Standards.

Advocates and the CAS opposed rescinding either Standard No. 103 or 104. Houston opposed rescinding Standard No. 103, commenting that the Standard ''rank(s) high on the list of important safety items.''

Advocates and CAS favored Proposal Two, i.e., upgrading the requirements for light trucks and MPVs so that they were equivalent to those for passenger cars. CAS further stated that Standards Nos. 103 and 104 should be amended to regulate rear windows. Flxible favored Proposal Two for both Standards Nos. 103 and 104 insofar as they would apply to over 10,000 lb. gross vehicle weight rating vehicles. Houston recommended that both Standards be extended to ''heavier trucks and buses.'' Although Subaru produces no MPVs or light trucks, it had no objection to upgrading MPV and light truck requirements to make them equivalent to the passenger car requirements. AAMA did not support extending the performance requirements of either Standard to other vehicles. NASDPTS stated that there was ''no justification'' to upgrade either Standard 103 or 104.

NHTSA received mixed comments on Proposal Three, i.e., combining Standards Nos. 103 and 104. For different reasons, NASDPTS, TMA, Flxible and Volkswagen opposed combining the two standards. NASDPTS stated that there would be no ''value added'' in combining the standards. TMA stated that combining the two standards would result in differences with the Canadian Motor Vehicle Safety Standards, and ''require some totally unnecessary paperwork changes.'' Flxible did not favor combining the two standards because it contracts out testing for the two standards and keeping the two standards separate would ''remove the potential for any confusion between the contracting parties.'' Volkswagen stated that combining the two standards would involve NHTSA and industry time and effort without any safety benefit.

CAS stated that whether it favors combining Standards Nos. 103 and 104 would depend on NHTSA's draft language in combining the two. The following commenters either favored or did not oppose combining the two Standards: Houston, Standard Motor Products, Advocates, AAMA, Subaru (''. . . as long as no additional requirements are added''), and Chrysler (''combining the two Standards appears to offer the best overall approach because the focus of these two standards is so common.'')

Finally, some commenters suggested that NHTSA should have raised the issue of harmonizing Standards Nos. 103 or 104 with international regulatory requirements. Volvo suggested changes to Standards Nos. 103 and 104's regulatory texts that would make each Standard harmonize with international standards. AAMA, Volkswagen and COSVAM expressly favored harmonizing Standards Nos. 103 and 104 with international standards. AAMA cited the European and Japanese standards that are the counterparts of Standards Nos. 103 and 104. Chrysler noted its disappointment that NHTSA did not offer international harmonization as an option for Standards Nos. 103 and 104.

NHTSA's Decision To Terminate Standards No. 103 and 104 Rulemakings

The purpose of the President's Regulatory Reinvention Initiative was to have the Federal government take a careful look at its regulations to identify and remove any unnecessary provisions. In response to that Initiative, NHTSA examined Standards No. 103 and 104. NHTSA was concerned that these standards might be imposing a needless regulatory burden on the public either by regulating in an area where no regulation was needed or by being needlessly complicated. To explore these concerns further, the agency proposed rescinding the standards or simplifying them, either by combining the two standards into one or by specifying performance requirements for multipurpose passenger vehicles and light trucks that are equivalent to those currently specified for passenger cars.

The public comments on the proposal indicate that the current requirements are not imposing unnecessary regulatory burdens. Further, there was no broad consensus, even among the vehicle manufacturers, in support of any of the

proposals. Some commenters expressed disappointment that the agency had not raised the issue of harmonizing Standards No. 103 and 104 with the counterpart requirements in the European and Japanese standards. NHTSA wants to make clear that the agency is committed to exploring the possibilities of harmonizing its regulatory requirements with the regulatory requirements of other nations, provided that such harmonization does not reduce the safety protection afforded to the American public. As evidence of that commitment, the agency has held a public meeting on July 10 and July 11, 1996 and a public workshop on January 16, 1997 on the subject of harmonizing the requirements of the Federal motor vehicle safety standards with the counterpart requirements in other countries' safety standards. The agency used the meeting and workshop to explain to the public what factors the agency would consider in deciding whether the U.S. safety standard and some other nation's safety standard are ''functionally equivalent,'' and to get public comments on the process the agency proposes to use to make functional equivalence determinations.

NHTSA believes it is more appropriate for the agency to establish a comprehensive approach and process for considering functional equivalence of the Federal motor vehicle safety standards and other nations' standards before the agency considers the functional equivalence of any standard or group of standards. Once the agency's comprehensive approach and process are in place for functional equivalence decisions, NHTSA will consider any requests for functional equivalence determinations of Standards No. 103 and 104 that are made according to the established process. Thus, the absence of a proposal for harmonization of Standards No. 103 and 104 with other national standards should be understood as an agency desire to avoid dealing with ''functional equivalence'' harmonization issues on an ad hoc, case by case basis, not as an absence of agency interest in pursuing international harmonization of motor vehicle safety standards.

For these reasons, the proposed rulemaking to change Standards No. 103 and 104 is hereby terminated.

Authority: 49 U.S.C. 322, 30111, 30115, 30117, and 30166; delegation of authority at 49 CFR 1.50.

Issued on: June 10, 1997.

L. Robert Shelton,

Associate Administrator for Safety Performance Standards.

[FR Doc. 97–15747 Filed 6–13–97; 8:45 am]

BILLING CODE 4910–59–P

DEPARTMENT OF TRANSPORTATION

National Highway Traffic Safety Administration

49 CFR Part 571

[Docket No. 95–56, Notice 02]

RIN 2127–AF77

Federal Motor Vehicle Safety Standards; Warning Devices

AGENCY: National Highway Traffic Safety Administration, DOT.

ACTION: Termination of rulemaking.

SUMMARY: In this document, NHTSA terminates rulemaking to rescind the Federal Motor Vehicle Safety Standard on triangular warning devices intended to be placed on the roadway behind disabled buses and trucks that have a gross vehicle weight rating (GVWR) greater than 10,000 lbs. Terminating this rulemaking relieves the Federal Highway Administration (FHWA) of the necessity for conducting a rulemaking proceeding to adopt its own requirements on triangular warning devices. Further, terminating this rulemaking will give the Department more effective enforcement authority regarding the performance of those devices. This rulemaking (61 FR 29337, June 10, 1996) was initiated as part of the agency's efforts to implement the President's Regulatory Reinvention Initiative.

FOR FURTHER INFORMATION CONTACT: For technical issues: Mr. Richard Van Iderstine, Office of Vehicle Safety Standards, NPS–21, telephone (202) 366–5280, FAX (202) 366–4329.

For legal issues: Ms. Dorothy Nakama, Office of Chief Counsel, NCC–20, telephone (202) 366–2992, FAX (202) 366–3820.

Both may be reached at NHTSA, 400 Seventh Street, SW, Washington, DC 20590.

SUPPLEMENTARY INFORMATION:

President's Regulatory Reinvention Initiative

Pursuant to the March 4, 1995 directive ''Regulatory Reinvention Initiative'' from the President to the heads of departments and agencies, NHTSA undertook a review of its regulations and directives. During the course of this review, NHTSA identified regulations that it could propose to rescind as unnecessary or to amend to improve their comprehensibility, application, or appropriateness. Among the regulations identified for potential rescission is Federal Motor Vehicle Safety Standard No. 125, *Warning devices* (49 CFR § 571.125).

Background of Standard No. 125

Federal Motor Vehicle Safety Standard (FMVSS) No. 125, *Warning devices,* specifies requirements for warning devices that do not have self-contained energy sources (unpowered warning devices) and that are designed to be carried in buses and trucks that have a gross vehicle weight rating (GVWR) greater than 10,000 lbs. The unpowered warning devices are intended to be placed on the roadway behind a disabled vehicle to warn approaching traffic of the vehicle's presence. The Standard does not apply to unpowered warning devices designed to be permanently affixed to the vehicle. The purpose of the Standard is to reduce deaths and injuries due to rear-end collisions between moving traffic and stopped vehicles.

The standard requires that the unpowered warning devices be triangular, covered with orange fluorescent and red reflex reflective material, and open in the center. These characteristics are intended to assure that the warning device has a standardized shape for quick message recognition, can be readily observed during both daytime and nighttime, and provides limited wind resistance so that it does not blow over when deployed.

NHTSA has never required that any new vehicle be equipped with the Standard No. 125 warning device or any other warning device. However, as explained below, FHWA, which has authority to regulate interstate commercial vehicles-in-use, mandates that operators of those vehicles carry and use unpowered warning devices meeting Standard No. 125, fusees or flares.

Previous Changes to Standard No. 125

Before 1994, Standard No. 125 applied to unpowered warning devices that are designed to be carried in any type of motor vehicle. On May 10, 1993 (58 FR 27314), NHTSA issued a notice of proposed rulemaking (NPRM) to amend Standard No. 125 so that the Standard applied only to warning devices that are designed to be carried in buses and trucks that have a gross vehicle weight rating (GVWR) greater than 10,000 lbs.

NHTSA proposed to narrow the scope of Standard No. 125 in order to provide manufacturers of unpowered warning devices with greater design freedom and to relieve an unnecessary regulatory burden on industry. At the specific request of FHWA, the agency proposed to retain the requirements for warning devices for buses and trucks with a GVWR greater than 10,000 lbs. This aspect of NHTSA's proposal supported FHWA's regulation of commercial motor vehicles under the Federal Motor Carrier Safety Regulations (FMCSR) (49 CFR parts 350–399). Section 393.95 of the FMCSR requires either that three Standard No. 125 warning devices or specified numbers of fusees or flares be carried on all trucks and buses used in interstate commerce.

NHTSA limited the applicability of Standard No. 125, as proposed, in a final rule published on September 29, 1994 (59 FR 49586). In the final rule, NHTSA stated that it was retaining Standard No. 125 in its narrowed form largely to ensure the continued availability of standardized unpowered warning devices which FHWA could specify as a means of complying with its warning device requirements for commercial vehicle operators.

Proposed Rescission of Standard No. 125

After reviewing Standard No. 125 in light of the President's Regulatory Review Initiative, NHTSA tentatively determined that retaining Standard No. 125 is not necessary to ensure the continued availability of unpowered warning devices. Accordingly, the agency developed a rescission proposal which reflected written and oral comments from FHWA staff. It published the NPRM on June 10, 1996 (61 FR 29337).

In the NPRM, NHTSA suggested that if Standard No. 125 were rescinded, FHWA would have two options. First, instead of specifying warning devices meeting NHTSA's Standard No. 125, FHWA could specify devices meeting criteria adopted by FHWA and placed in its own regulations. More specifically, FHWA could adopt the current manufacturing standards for the warning devices, i.e., those in Standard No. 125, as an appendix to the Federal Motor Carrier Safety Regulations. Section 393.95 would be revised to reference the newly created appendix as opposed to Section 571.125.

Second, FHWA could work with an industry voluntary standards setting organization such as the Society of Automotive Engineers (SAE) to develop an industry standard on unpowered warning devices containing requirements similar to those in Standard No. 125. Once those requirements were developed, FHWA could incorporate them by reference in Section 393.95.

Public Comments on Proposed Rescission

NHTSA received mixed comments in response to its proposal to rescind Standard No. 125. Two commenters, Chrysler and Ford, supported NHTSA's proposal to rescind the Standard. Chrysler stated its agreement with NHTSA that Standard No. 125 is unnecessary ''since devices meeting these requirements are already stipulated by the FHWA for commercial carriers.'' Ford suggested that Standard No. 125's provisions could be transferred to FHWA's Federal Motor Carrier Safety Regulations (FMCSR).

Other commenters, including 3M Company, Advocates for Highway and Auto Safety (Advocates), Dr. Merrill J. Allen, American Highway Users Alliance (AHUA), American Trucking Associations (ATA), Automotive Parts and Accessories Association (APAA), Center for Auto Safety (CAS), Cortina Tool and Molding and James King Company (in one submission) (Cortina/King), National Private Truck Council (NPTC), Sate-Lite Manufacturing Company, Transportation Safety Equipment Institute (TSEI), Truck Manufacturers Association (TMA) and several members of the U.S. House of Representatives opposed the proposed rescission of Standard No. 125. The commenters offered the following reasons for their opposition:

1. Standard No. 125 Has Value

The commenters opposed to rescinding Standard No. 125 generally stated that the Standard has value, and expressed various reasons for their belief. Sate-Lite, a triangular warning device manufacturer, stated that it did not consider the Standard's performance requirements unnecessary or a burden. 3M, which operates a fleet of over 5200 vehicles, stated that: ''Each of the criteria in the standard represent items of value to the users of those devices.'' 3M stated that deviations from these criteria would reduce and possibly eliminate this value.

Other commenters stated that Standard No. 125 is needed simply because it ensures uniformity in the triangular warning devices. Erosion of uniformity would impair the ability of those devices designed to meet the current standard to communicate hazards effectively. 3M and APAA stated that with the recent increases in the nation's speed limits, there is a greater need for motorists to have advance, distinctive warning of a disabled vehicle ahead, and the triangular warning device meets that need. Cortina/King commented that Standard No. 125 devices are the only safe warning devices for deployment in conjunction with a stopped vehicle carrying flammable materials.

TSEI commented that NHTSA appears ready to adopt an ''anything goes'' approach that would confuse motorists and violate the agency's longstanding policy of maintaining consistency in visual signals to motorists. TSEI contrasted the present rulemaking with NHTSA's past interpretations of Standard No. 108, *Lamps, reflective devices, and associated equipment.* Those interpretations emphasized the safety importance of avoiding even momentary confusion of motorists as to the meaning of the supplemental lighting signals.

2. State Regulation and International Harmonization Issues

Related to the lack of uniformity issue, Advocates, ATA, and TSEI expressed concern that the States would regulate in the absence of Standard No. 125. Advocates, AHUA, and TSEI also suggested that rescinding Standard No. 125 would conflict with NHTSA's recently announced efforts (see 61 FR 30657, June 17, 1996) to harmonize the FMVSSs with international standards.

3. NHTSA Administration and Enforcement of Triangular Warning Devices is Preferred

Many commenters expressed the view that NHTSA has more effective statutory authority to administer and enforce a unpowered triangular warning device standard than FHWA. Some commenters raised the possibility that there could be a period after NHTSA rescinds the Standard and before FHWA enacts it, when there would be no triangular warning device regulation at all. Some commenters incorrectly speculated that there had not been any consultation between NHTSA and FHWA during NHTSA's development of its proposal.

4. Rescinding the Standard Would Be ''Arbitrary and Capricious

Some commenters stated that in its proposed rescission of Standard No. 125, NHTSA did not show that there is no safety need for the Standard, and in absence of showing no safety need, NHTSA has no legal authority to rescind the standard.

Agency Decision

In response to the President's Regulatory Reinvention Initiative, NHTSA carefully examined Standard No. 125. Although NHTSA has a safety standard for warning triangles, FHWA is the part of the Department that has the greatest program responsibilities for warning triangles. It is FHWA that requires vehicle operators to carry warning triangles or other warning devices in vehicles and it is FHWA that requires vehicle operators to use warning triangles or other warning devices to alert other motorists of the presence of a disabled vehicle. In issuing its proposal, NHTSA believed it would make the government program for warning triangles more effective and more efficient if the FHWA were also responsible for establishing the performance requirements for these warning devices.

After reviewing the public comments on this proposal and after further consultation with FHWA, NHTSA believes that the current division of program responsibilities and regulatory requirements has served the public well. In fact, the current division of responsibilities assures the public the benefits of the joint expertise of NHTSA and FHWA working together on issues that arise in connection with these warning devices. In addition, the proposal would have forced FHWA to expend resources to promulgate a rule that would be identical to the rule NHTSA rescinded. After reconsidering all these factors, NHTSA has concluded that its proposal to rescind the warning triangle standard should be terminated. This notice announces that termination.

Potential rulemaking actions may arise from one or more pending petitions. Because it will retain Standard No. 125, NHTSA will proceed with its consideration of pending petitions for rulemaking to amend Standard No. 125 from the TSEI and Gault Industries.

Authority: 49 U.S.C. 322, 30111, 30115, 30117, and 30166; delegations of authority at 49 CFR 1.50 and 501.8.

Issued on: June 10, 1997.

L. Robert Shelton,

Associate Administrator for Safety Performance Standards.

[FR Doc. 97–15746 Filed 6–13–97; 8:45 am]

BILLING CODE 4910–59–P

DEPARTMENT OF COMMERCE

National Oceanic and Atmospheric Administration

50 CFR Part 679

[Docket No. 960206024–7123–02; I.D. 043097A]

RIN 0648–AG32

Fisheries of the Exclusive Economic Zone Off Alaska; At-Sea Scale Certification Program

AGENCY: National Marine Fisheries Service (NMFS), National Oceanic and Atmospheric Administration (NOAA), Commerce.

ACTION: Proposed rule; request for comments.

SUMMARY: NMFS proposes amendments to the regulations implementing the Fishery Management Plan for Groundfish of the Gulf of Alaska and the Fishery Management Plan for the Groundfish Fishery of the Bering Sea and Aleutian Islands Area (FMPs). This proposed regulatory amendment would implement the requirements for certification and at-sea testing of scales used to weigh groundfish catch at sea. This action is intended to promote the objectives of the FMPs.

DATES: Comments must be received by July 16, 1997.

ADDRESSES: Comments on the proposed rule should be sent to Ronald J. Berg, Chief, Fisheries Management Division, Alaska Region, NMFS, P.O. Box 21668, Juneau, AK 99802, Attn: Lori J. Gravel, or delivered to the Federal Building, 709 West 9th Street, Juneau, AK.

Send comments regarding burden estimates or any other aspect of the data requirements, including suggestions for reducing the burdens, to NMFS and to the Office of Information and Regulatory Affairs, Office of Management and Budget (OMB), Washington, D.C. 20503, Attn: NOAA Desk Officer.

FOR FURTHER INFORMATION CONTACT: Sally Bibb, 907–586–7228.

SUPPLEMENTARY INFORMATION:

Background

Fishing for groundfish by U.S. vessels in the exclusive economic zone of the Gulf of Alaska (GOA) and the Bering Sea and Aleutian Islands Management Area (BSAI) is managed by NMFS according to the FMPs. The FMPs were prepared by the North Pacific Fishery Management Council (Council) under authority of the Magnuson-Stevens Fishery Conservation and Management Act (Magnuson-Stevens Act). Fishing by U.S. vessels is governed by regulations implementing the FMPs at subpart H of 50 CFR part 600 and 50 CFR part 679.

In 1990 the Council requested that NMFS analyze a requirement to weigh catch processed at sea. NMFS implemented regulations on May 16, 1994 (59 FR 25346), requiring processor vessels in the pollock Community Development Quota (CDQ) fisheries to either provide certified bins for volumetric estimates of catch or scales to weigh catch. In September 1994, the Council recommended that NMFS require processor vessels participating in the BSAI pollock fisheries to weigh their catch before discard or processing. In response to this request, NMFS published an Advance Notice of Proposed Rulemaking (ANPR), which requested public comment on a three-part scale evaluation and approval process on February 20, 1996 (61 FR 6337). Public comment was invited through March 21, 1996. Comments relevant to this proposed rulemaking are summarized and responded to below in the ''Response to Comments'' section.

The proposed at-sea scale certification program described in this rulemaking is designed in response to comments on the ANPR, NMFS research evaluating the use of scales on processor vessels, further experience using scales on two processor vessels in the CDQ fisheries, and the recommendations of a technical advisor hired by NMFS.

NMFS specifically seeks public comment on the proposed process for determining whether a particular scale is capable of weighing accurately at sea, the performance and technical requirements in the At-Sea Scales Handbook, and the proposed procedures for testing scales at sea.

Specifying Which Processors Must Weigh

This proposed rulemaking does not require specific processors or vessels to use certified scales to weigh catch at sea. NMFS currently is considering proposing requirements for at-sea weighing in the proposed multispecies CDQ fisheries and in the BSAI pollock fisheries as recommended by the Council. However, a program for inspecting and certifying scales for use in weighing at sea must be established before NMFS proceeds with proposed requirements for specific processors or vessels to weigh catch at sea.

Response to Comments

Six letters were received in response to the request for public comment on the ANPR. Many of the comments in these letters related to whether NMFS should require processor vessels in the BSAI pollock fisheries to weigh catch at

sea. Eight comments related to specific questions in the ANPR about the technical or operational aspects of a certified scale program, which is the subject of this proposed rulemaking. These comments are addressed below.

Comment 1. Any method of evaluating a scale must first establish specifications in detail.

Response. NMFS concurs. NMFS hired a technical advisor with expertise in developing specifications for many different types of scales to revise the specifications originally proposed in the ANPR. NMFS believes that the level of detail and the applicability of performance and technical requirements for scales used to weigh catch at sea have been improved in the proposed rule and the At-Sea Scales Handbook. NMFS continues to seek public comment in this regard.

Comment 2. Personnel with the National Type Evaluation Program (NTEP) do not have the expertise to evaluate at-sea scales.

Response. NMFS concurs that NTEP personnel have not evaluated a scale designed to compensate for vessel motion, although appropriate expertise and test procedures could be developed at accredited laboratories in the future. Unlike the ANPR, the proposed rule would allow laboratory tests to be conducted at any accredited laboratory.

Comment 3. It is not feasible to use groundfish as a test material for the initial inspection of motion-compensated belt scales on vessels because it would require travel to Alaska well in advance of the fishing seasons to harvest a small amount of fish for the tests.

Response. NMFS concurs. The proposed rule would allow initial and periodic scale inspections to be conducted at any time during the year in either Seattle or Dutch Harbor. Because fish would not be available at the time of initial inspection, the proposed rule would allow the use of alternative material. However, fish could still be used in daily materials tests conducted during the fishing seasons.

Comment 4. The fishing industry is unwilling to fund the inspection and certification program for scales used to weigh catch in the open access fisheries.

Response. The proposed rule does not include a provision that would require the fishing industry to pay for scale inspections and certifications, although provisions to recover the costs of the scale inspections could be added by NMFS in the future if the collection of fees for this service were authorized by the Magnuson-Stevens Act. NMFS would not pay for laboratory tests conducted under type approval requirements. These tests would be the responsibility of the scale manufacturer.

Comment 5. Knowledgeable inspectors must be available to conduct scale tests.

Response. NMFS concurs and intends to designate an agency such as the State of Alaska, Division of Measurement Standards, to provide trained personnel to inspect and certify at-sea scales. Weights and measures inspectors would require little additional training to inspect hopper scales, platform scales, and hanging scales as they regularly certify these types of scales for use on land. The inspectors are less familiar with belt scales. However, the specific requirements listed in the At-Sea Scales Handbook combined with written procedures for conducting the inspections would assist the inspectors. In addition, training on inspecting and certifying belt scales would be provided.

Comment 6. Results of initial experience with motion-compensating scales are not good.

Response. NMFS has had experience with scales used to weigh catch on three processor vessels. In one case, the processor vessel installed the scale voluntarily and used it to monitor product recovery rates. This processor has reported no problems with the scale in over 5 years of use. The other two processor vessels installed scales during the 1995 pollock nonroe season in order to comply with regulations governing the pollock CDQ program. One of these scales was improperly installed. An initial inspection of the scale as described in this proposed rule would have identified the installation problem before the vessel went fishing. The other scale was modified during the fishing season in a manner that prevented it from weighing accurately. Education of the vessel crew as to how the scale operates appears to have resolved this problem.

Since the ANPR was published, NMFS has contracted with a processor vessel to use a motion-compensated belt scale to evaluate the accuracy of various methods for making volumetric estimates of catch weight in the pollock fisheries. The belt scale was tested nearly every day for approximately 14 weeks and weighed the test material within 3 percent of its known weight each time it was tested.

Comment 7. Daily tests of the scale would be costly to industry in terms of the lost production time.

Response. Based on experience testing the scale, NMFS estimates that the time required for daily scale tests would be 15 minutes or less. NMFS believes testing the scales each day is necessary to determine whether they are continuing to weigh accurately at sea.

Comment 8. Only one scale company manufactures a scale reliable enough to accurately weigh catch at sea. This will result in high costs for the scale and scale repair and a shortage of qualified technicians.

Response. NMFS agrees that, thus far, only one company has demonstrated that its scale can weigh large quantities of fish at sea and pass daily accuracy tests. However, several scale companies are developing at-sea scales of various types including belt scales and automatic hopper scales. Implementation of specific performance and technical requirements is expected to provide the information necessary for other scale companies to develop competing products.

At-Sea Scale Certification Program

Scales used in commerce in the United States are regulated by state and local government agencies, based on national standards established by the National Conference on Weights and Measures (NCWM) and published by the U.S. Department of Commerce, National Institute for Standards and Technology (NIST) in Handbook 44. Handbook 44 includes design, use, and performance standards for many different weighing and measuring devices, including several different types of scales. Scales used by processors buying fish in Alaska are required to be certified by the State of Alaska, Division of Measurement Standards, based on Alaska regulations and Handbook 44.

Although Handbook 44 contains standards for scales of the general description of those that will be used to weigh catch at sea (i.e., belt, hopper, platform, and hanging scales), it does not provide adequate standards for at-sea scales for several reasons. First, it contains no requirement for motion compensation technology, which NMFS believes is necessary to weigh accurately at sea. Second, it contains no standards appropriate to evaluate the type of belt scale that has been designed for use on processor vessels. NMFS believes this type of scale should be an option for vessel owners. Finally, accuracy standards or tolerances for scales used in commerce are higher than NMFS believes can be achieved at sea.

The lack of appropriate standards for at-sea scales led NMFS to develop the proposed standards for at-sea scale certification in the At-Sea Scales Handbook. This handbook was prepared by NMFS with the assistance of a technical advisor who was formerly employed with NIST. The proposed standards are modeled after

requirements in Handbook 44 and other international scale standards but have been modified to reflect the unique environment in which at-sea weighing will occur.

The proposed rule would add a new § 679.28 to 50 CFR part 679, titled ''Equipment and Operational Requirements for Catch Weight Measurement'' and would codify the At-Sea Scales Handbook as Appendix A to part 679. Section 679.28 would contain vessel owner and operator responsibilities for scale certification, at-sea testing, and recordkeeping and reporting and would define a scale certified to weigh at sea as one that meets the performance and technical requirements in Appendix A to part 679, the At-Sea Scales Handbook.

Compliance with the performance and technical requirements in the At-Sea Scales Handbook would be evaluated through both laboratory tests and scale inspections. First, the model of scale would be tested in a laboratory to verify that it meets technical requirements and weighs accurately under some of the environmental factors expected on commercial fishing and processing vessels. This process is know as ''type evaluation''.

Second, each installed scale would be certified by an inspector authorized by the Administrator, Alaska Region, NMFS (Regional Administrator) in initial and periodic inspections. A certified scale would be required to be recertified each year. In addition, the scale would have to be recertified if it is modified or removed from the vessel and reinstalled. Further, to being certified, the scale would be required to weigh accurately at sea as determined by tests performed each day by the vessel crew and witnessed by the NMFS-certified observer.

Compliance with § 679.28 would require successful completion of all three elements described above. The scale would be required to successfully meet both the type evaluation and inspection requirements to be certified. Once certified, the scale would be required to continue to weigh accurately at sea. A certified scale that did not pass daily scale performance tests would not comply with the regulations and an uncertified scale could not be used even if it passed daily scale tests.

NMFS believes that the three-part scale testing and inspection process is necessary to prevent the installation and use of equipment that is not suited for the environment in which it will be used and to minimize the number of scales that develop problems during a fishery. The type-evaluation process would evaluate how a scale performs under laboratory simulation of the at-sea environment—tests that cannot be performed by a scale inspector on the vessel. Type evaluation also would provide the vessel owners added assurance that the model of scale they are purchasing has been designed to perform on a vessel and that it meets some of the minimum technical and performance requirements for at-sea scales. The initial and periodic inspections would verify that each scale installed on a particular vessel complies with all technical requirements and weighs test material or test weights accurately. The inspection also would identify improper installations or malfunctioning scales and verify that the vessel owner has provided the test material required for the at-sea scale tests. The at-sea scales tests would be the only tests that would determine whether the scale weighs accurately at sea. NMFS is not proposing to require laboratory simulation of vessel motion due to the complexity and cost of this type of testing. The scale inspections would occur at the dock, under conditions of minimal vessel motion.

The At-Sea Scales Handbook contains requirements for four different types of scales that may be used to weigh fish on a vessel. They are (1) belt scales, (2) automatic hopper scales, (3) platform scales, and (4) hanging scales. The handbook has a separate section for belt scales and automatic hopper scales. The requirements for platform and hanging scales are combined in a third section. Type evaluation requirements for all scales are included in an annex to Appendix A.

Only these four types of scales could be certified under the proposed program. No other type of weighing or measuring device could be certified under this program until certification standards are developed and added to § 679.28 and Appendix A.

Performance standards and technical requirements for four different types of scales are necessary because of the many possible applications for at-sea scales. Belt scales are most appropriate for high volume, continuous flow operations such as trawl catcher/processors or motherships. However, these scales may not weigh as accurately in low volume or discontinuous flow operations such as on longline or pot catcher/processors. Automatic hopper scales could be used for both types of operations because they accumulate fish in a hopper until a certain target weight is reached, then fish are released back onto the factory line. Platform and hanging scales are included because they could be used to weigh fish in small quantities.

Type Evaluation

Type evaluation is a one-time test of a model or type of scale to determine whether the scale meets technical requirements and functions within specified parameters under the environmental conditions expected on a vessel. In order to obtain type approval, a scale company would submit one scale of a particular model or type for laboratory tests. If that scale met the performance and technical requirements, the laboratory certification would cover all scales of this particular model. The proposed regulations would not require laboratory testing of each individual scale.

One of the most important technical requirements that would be verified by the laboratory would be whether the scale was designed to compensate adequately for the effect of motion on the weight indicated by the scale. NMFS proposes to require that scales be equipped with automatic means to compensate for the motion of a vessel at-sea in the form of a reference load cell and a reference mass weight or other equally effective means. The reference mass weight would be weighed by the reference load cell and a motion-compensation adjustment factor would be calculated and applied to the fish weight. For example, assume that the reference mass weight actually weighed 10 kg, but the motion of the vessel was such that the reference load cell sensed that it weighed only 9.9 kg. In this case, the scale would adjust the weight of the fish it was weighing by the same ratio as the indicated error in the reference weight (see sections 2.3.2.6, 3.3.4.3, and 4.3.2.3 in the At-Sea Scales Handbook). Scale manufacturers who wish to use a different but at least as effective means of motion-compensation as described above would be required to provide NMFS with laboratory or field test results demonstrating that the scale is capable of weighing accurately at sea.

One scale manufacturer has submitted laboratory test results to NMFS for a motion-compensated belt-conveyor scale. The tests were performed at a Danish laboratory and would comply with many of the requirements proposed in this rulemaking. Other types of motion-compensated scales would have to be submitted to a laboratory for evaluation, which could take up to 3 months to complete. Certification of successful completion of laboratory tests would be required before the an inspector could test and certify a scale installed on a vessel.

Requirements for the laboratory tests are contained in two different areas of the handbook. Requirements specific to

a particular type of scale are found in sections 2, 3, and 4. Test procedures common to all scales are found in the annex to the handbook. For example, section 2 contains specific requirements for belt scales. Section 2.2 contains performance standards for belt scales. Section 2.2.1 contains the maximum permissible errors (mpe) for tests of the belt scale and section 2.2.1.1 contains the mpes for the laboratory tests of the belt scale. Similarly, section 3.2.1.1 contains the mpes for the laboratory tests of automatic hopper scales and section 4.2.1.1 contains the mpes for laboratory tests for platform and hanging scales.

The laboratory tests, described in the annex, are divided into disturbance tests and influence quantity tests. Disturbances refer to events that may occur while the scale is being used, but that are not within the rated operating conditions of the scale, such as short time power reduction, power bursts, electrostatic discharge, and electromagnetic susceptibility. Influence quantities refer to factors that may affect the accuracy of the scale weight and are within the rated operating conditions of the scale, such as temperature, humidity, and power voltage fluctuations.

Each scale submitted for type evaluation would be tested for disturbances and influence quantities based on the performance requirements of applicable sections of the handbook and on the test procedures in the annex. The scales also would be evaluated for compliance with the technical requirements in each section, such as scale markings, printed output, display units and capacity, permanence of marking, event loggers to record scale adjustments, and means to retain information in memory in the event of a power loss.

Complete, signed type-evaluation certification documents would be required to be received by the Regional Administrator before any scale of the particular model could undergo an initial inspection by the authorized inspector. The Regional Administrator would maintain a list of scales that had successfully completed type-evaluation requirements and make this list available to the public upon request. The type-evaluation certification documents would include an application form, checklists to verify compliance with all performance and technical requirements, and test report forms to record the results of specific tests. NMFS would provide the blank forms to scale manufacturers, laboratories, and vessel owners upon request.

Laboratories certifying compliance with type-evaluation requirements would have to be accredited by the U.S. Government or by the government of the country in which the laboratory is located. For example, in the United States, a laboratory may be accredited by programs recognized by the NIST such as the National Voluntary Laboratory Accreditation Program. Information about laboratory accreditation must be provided on the type evaluation certification documents and would be evaluated by the Regional Administrator through consultation with NIST or the national weights and measures agency of the country in which the laboratory is located.

The performance and technical requirements for laboratory tests for belt scales specified in the At-Sea Scales Handbook are based, in part, on the International Organization of Legal Metrology's (OIML) international recommendations for continuous totalizing automatic weighing instruments (R–50). Manufacturers of belt scales may request that the Regional Administrator accept laboratory tests performed to demonstrate compliance with OIML R–50 standards in lieu of laboratory tests in the At-Sea Scales Handbook. These manufacturers would have to submit written and signed copies of the laboratory test results. Any requirements in the At-Sea Scales Handbook that are not in the OIML R–50 standards would be required to be verified by an independent laboratory. NMFS would have these requests reviewed by a technical advisor to verify that the proposed laboratory test results met the requirements of the At-Sea Scales Handbook.

NMFS seeks public comment on whether existing laboratory certification processes in the United States or elsewhere could similarly be used in lieu of the proposed type evaluation certification requirements for automatic hopper scales, platform scales, or hanging scales. Comments must specifically address the source of the alternative laboratory test specifications and the type of certification documents that could be accepted by NMFS.

Initial and Periodic Inspections

The initial inspection of each scale installed on a vessel would be performed by an authorized weights and measures inspector designated by the Regional Administrator based on the performance and technical requirements in the At-Sea Scales Handbook. The inspector would complete certification forms including a checklist and test report forms. The vessel owner would be required to maintain a copy of the scale certification documents on the vessel at all times when a certified at-sea scale was required to be used and to submit a copy to NMFS. NMFS would maintain a list of vessels with current scale certifications.

The initial inspection would occur while the vessel is in drydock or tied up in either Seattle or Dutch Harbor. The vessel owner would be responsible to schedule inspections with the authorized weights and measures inspectors designated by the Regional Administrator. The vessel owner would be required to give the scale inspectors at least 10 working day's notice prior to the inspection to allow for scheduling and travel from anchorage to Seattle or Dutch Harbor. At the time of the inspection, the vessel owner would be required to assist the inspector in moving test equipment to and from the inspector's vehicle and the location on the vessel where the scale is installed.

Each scale would be inspected to determine compliance with technical requirements such as level installation; proper marking of information such as name, model designation, and serial number; the required indicators and printer; and the proper sealing of adjustable components. A ''zero test'' would be performed on all scales to determine whether the scale accumulated weight while empty.

Each scale would be tested for accuracy based on the procedures appropriate for the particular type of scale. Belt scales would be tested with a ''materials test'' in which an amount of material would be first weighed on a certified scale to determine its known weight and then weighed on the belt scale. The difference between the known weight and the weight indicated by the belt scale would be the error of the belt scale. Belt scales would be required to weigh material to within 1 percent of its known weight in the initial and periodic inspections in stationary installations.

Automatic hopper scales, platform scales, and hanging scales would be tested by placing standard test weights in or on the scale in different amounts and locations. These scales would be required to weigh the standard test weights to within 1 percent of their known weight. All test material and weights needed for scales tests during the inspection would be provided by the scale inspector.

Each scale would be tested to determine compliance with requirements for printed output. Printed output of the catch weight including vessel name and Federal fisheries or processor permit number, haul or set number, date and time weighing catch

from haul or set started and ended, and the weight of fish in each haul or set would be required for all scales. In addition, a printed record of any tests, adjustments, calibrations, or other procedures performed on the scale including month, day, year, and time of procedure, name or description of procedure, and result of procedure would be required. The inspector also would verify that the test material required to be provided by the vessel owner for the at-sea scale tests was on board the vessel and in compliance with requirements discussed below.

Each scale would be required to be certified every year, within 12 months of the date of the most recent certification. An inspection also would be required if the scale is moved to a different location on the vessel, undergoes major modifications, or is reinstalled after being removed from the vessel.

At-Sea Scale Tests

At-sea scale tests would be required to determine whether the scale weighed accurately in motion. Tests would be performed each day by the vessel crew and witnessed by the observer. Each scale would be required to weigh the test material within 3 percent of its known weight. If the scale did not meet this performance standard, it would be required to be recalibrated or repaired and retested. Any material or test weights required for the at-sea tests would be provided and maintained by the vessel owner. Test material other than fish or any standard test weights that will be used to test the scale at sea must be inspected and approved by the authorized weights and measures inspector at the time of initial or periodic inspections.

The vessel operator may conduct the scale test at any time that does not interfere with the observer's sampling or related duties, however, the observer must be notified of a test at least 15 minutes before it is conducted and the observer must be present for the test. The observer would not be required to determine the time of the test or to perform any of the physical labor associated with the test.

Classification

The Assistant General Counsel for Legislation and Regulation of the Department of Commerce certified to the Chief Counsel for Advocacy of the Small Business Administration that this proposed rule, if adopted, would not have a significant economic impact on a substantial number of small entities, as follows:

The proposed rule would establish a testing and certification program for scales to weigh catch at sea in the groundfish fisheries off Alaska. It does not include any requirements for specific vessels or processors to install or use at-sea scales.

Because there are no requirements imposed on vessel operators or processors, it does not affect the way they do business. There are no compliance costs, and there will be no impact on revenues. It merely establishes a procedure to be used in the future, if such requirements are imposed on vessels and/or processors. Therefore, no Initial Regulatory Flexibility Analysis was prepared.

This proposed rule has been determined to be not significant for purposes of E.O. 12866.

This proposed rule contains a new collection-of-information requirement subject to review and approval by OMB under the Paperwork Reduction Act (PRA). This collection-of-information requirement has been submitted to OMB for approval. The new information requirements include the following: (1) Scale manufacturers must submit completed At-Sea Scales Type Evaluation Certification documents to the Regional Administrator prior to being placed on the list of eligible at-sea scales; (2) vessel owners must submit a copy of the scale certification document issued by a scale inspector approved by the Regional Administrator to NMFS prior to participating in a fishery in which a certified at-sea scale is required; (3) vessel operators must maintain a record of the results of daily at-sea scale tests; and (4) vessel operators must maintain printed output from the scale. The public reporting burden for this collection of information is estimated to average 176 hours per response for the type evaluation certification documents, 15 minutes per response to submit the scale certification to NMFS, 45 minutes per response for the at-sea scale tests, and 3 minutes per response for the printed output from the scale. These estimates include the time for reviewing instructions, searching existing data sources, gathering and maintaining the data needed, and completing and reviewing the collection of information. Send comments regarding these burden estimates or any other aspect of the data requirements including suggestions for reducing the burden, to NMFS (see **ADDRESSES**) and to the Office of Information and Regulatory Affairs, OMB, Washington, DC 20503 (Attention: NOAA Desk Officer).

Public comment is sought regarding: Whether this proposed collection of information is necessary for the proper performance of the functions of the agency, including whether the information has practical utility; the accuracy of the burden estimate; ways to enhance the quality, utility, and clarity of the information to be collected; and ways to minimize the burden of the collection of information, including through the use of automated collection techniques or other forms of information technology.

Notwithstanding any other provision of the law, no person is required to respond to, nor shall any person be subject to a penalty for failure to comply with, a collection-of-information subject to the requirements of the PRA, unless that collection-of-information displays a currently valid OMB control number.

The Regional Administrator determined that fishing activities conducted under this rule will not affect endangered and threatened species listed or critical habitat designated pursuant to the Endangered Species Act in any manner not considered in prior consultations on the groundfish fisheries of the GOA or BSAI.

List of Subjects in 50 CFR Part 679

Fisheries, Reporting and recordkeeping requirements.

Dated: June 10, 1997.

David L. Evans,

Deputy Assistant Administrator for Fisheries, National Marine Fisheries Service.

For the reasons set out in the preamble, 50 CFR part 679 is proposed to be amended as follows:

PART 679—FISHERIES OF THE EXCLUSIVE ECONOMIC ZONE OFF ALASKA

1. The authority citation for part 679 continues to read as follows:

Authority: 16 U.S.C. 773 *et seq.*, 1801 *et seq.*, and 3631 *et seq.*

§ 679.27 [Reserved]

2. In subpart B, § 679.27 is reserved.

3. In subpart B, § 679.28 is added to read as follows:

§ 679.28 Equipment and operational requirements for catch weight measurement.

(a) *Applicability*. This section contains the requirements for motion-compensated, NMFS-certified scales to weigh catch at sea. This section applies only to vessels required to use at-sea scales elsewhere in the regulations.

(b) *At-sea scales certification program*—(1) *List of eligible at-sea scales.* The model of scale must be on the Regional Administrator's list of eligible at-sea scales before an inspector will test or certify a scale installed on a vessel under paragraph (b)(2) of this section. A scale will be included on the list of eligible at-sea scales when the

Regional Administrator receives the information specified in paragraph (b)(1) (i) or (ii) of this section from a testing laboratory accredited by the government of the country in which the tests are conducted. Each model of scale on the list of eligible at-sea scales will be assigned a NMFS type evaluation certification number by the Regional Administrator.

(*i*) *Type evaluation certification documents.* The following information must be submitted on forms provided by the Regional Administrator.

(A) *Type Evaluation Certificate*—(1) *Information about the scale.* (*i*) Name of scale manufacturer.

(*ii*) Name of manufacturer's representative.

(*iii*) Mailing address of scale manufacturer and manufacturer's representative.

(*iv*) Telephone and facsimile number of manufacturer's representative.

(*v*) Model of scale.

(*vi*) Serial number of scale being tested.

(*vii*) Type of scale, choosing among belt, automatic hopper, platform or hanging scale.

(*2*) *Information about the certifying laboratory.* (*i*) Name of laboratory. (*ii*) Mailing address of laboratory. (*iii*) Telephone and facsimile number of laboratory's representative. (*iv*) Name and address of government agency accrediting the laboratory. (*v*) Name and signature of person responsible for type evaluation certification and date of signature.

(B) *Type Evaluation Checklist.* The certifying laboratory's representative must indicate on the Type Evaluation Checklist form whether the scale met applicable performance and technical requirements specified in Appendix A (At-Sea Scales Handbook).

(C) *Type Evaluation Test Report Forms.* The certifying laboratory's representative must provide the results of each applicable test specified in Appendix A (At-Sea Scales Handbook) on the Type Evaluation Test Report Form.

(ii) *Alternative type evaluation certification documents.* Scale manufacturers may request that the Regional Administrator consider tests performed on belt scales to meet the International Organization of Legal Metrology's recommendations for continuous totalizing automatic weighing instruments (OIML R–50) in accuracy class 2 as a substitute for the requirements specified in Appendix A (At-Sea Scales Handbook). The Regional Administrator will review these proposals to determine whether the proposed test procedures and results comply with the requirements in paragraph (b)(1) of this section.

(2) *At-sea scale inspection certificate.* Each scale or scale system used to weigh catch at sea must be tested and certified by a scale inspector authorized by the Regional Administrator upon initial installation. The scale must be recertified each year within 12 months of the date of the most recent certification. The scale also must be certified after major modification or installation of the scale at a different location on the vessel. An at-sea scale inspection certificate will be issued by the inspector if the scale meets all applicable requirements specified in Appendix A (At-Sea Scales Handbook). In order to obtain an at-sea scale inspection certification, the vessel owner must:

(i) Make the vessel and scale available for inspection by a scale inspector authorized by the Regional Administrator after the vessel owner has installed a model of scale on the Regional Administrator's list of eligible at-sea scales described in paragraph (b)(1) of this section. The time and place of the inspection may be arranged by contacting the authorized scale inspectors. Scale inspections will be scheduled no later than 10 working days after the day that the vessel owner requests an inspection. Identity of authorized scale inspectors can be obtained from NMFS.

(ii) Transport test weights, test material, and equipment required to perform the test to and from the inspector's vehicle and the location on the vessel where the scale is installed.

(iii) Apply test weights to the scale or convey test materials across the scale, as requested by the scale inspector.

(iv) Assist the scale inspector in performing the scale inspection and testing.

(v) Submit a copy of scale certification documents signed by the weights and measures inspector to the Regional Administrator and maintain a copy of these documents on board the vessel at all times when the processor or vessel is required to use a certified scale. These documents must be made available to the observer, NMFS personnel, or an authorized officer upon request.

(vi) Make test material or test weights required for the at-sea scale tests under paragraph (b)(3)(ii) of this section available to the inspector at the time of the inspection.

(3) *At-sea scale tests.* Each scale or scale system used to weigh catch at sea must be tested each 24-hour period in which fish are weighed on the scale to verify that the scale is weighing test material within 3 percent of its known weight. The vessel operator must:

(i) Notify the observer at least 15 minutes before the test will be conducted and conduct the test while the observer is present.

(ii) Provide and maintain the following equipment or materials to conduct the test on board the vessel at all times while a daily test is required.

(A) *Belt scales.* The vessel operator must provide one of the following to conduct a daily materials test.

(*1*) At least 400 kg of fish whose weight has been determined to the nearest kg on a scale other than the scale under test. The scale used to determine the known weight of the fish must weigh test weights to within 1 percent of their known weight, or

(*2*) At least 400 kg of test material whose weight has been determined to the nearest kg on a scale certified under this section or certified by a state or local weights and measures official. The test material must be described in writing. If the test material is comprised of more than one package or unit of test material, each unit must have a unique identification number or letter, and weight of the unit indelibly marked on the exterior of the unit. The identification number and weight of each unit of test material must be certified in writing by the authorized scale inspector at the time of initial or periodic inspection. Replacement units of test material manufactured on board the vessel must be marked and weighed on a scale that meets the requirements of paragraph (b)(3)(ii)(A)(*1*) of this section. The NMFS-certified observer must witness the weighing of the replacement test material. Written information including the date the replacement material was weighed, the identification number and weight of the replacement material, and the identification number and weight of test material being replaced must be signed by the vessel operator and maintained with the original scale certification documents on the vessel.

(B) *Other Types of Scales.* The vessel operator must provide certified test weights in an amount equal to the largest amount of fish that will be weighed on the scale in one weighment. Each test weight must have its weight stamped on or otherwise permanently affixed to it. The weight of each test weight must be verified annually at the initial or periodic scale inspection required under paragraph (b)(2) of this section by the authorized weights and measures inspector.

(iii) Conduct the scale test by placing the test material or test weights on or across the scale and recording the

following information on the at-sea scale test report form.

(A) Vessel name.

(B) Month, day, and year of test.

(C) Time test started to the nearest minute.

(D) Known weight of test material or test weights.

(E) Weight of test material or test weights recorded by scale.

(F) Percent error as determined by subtracting the known weight of the test material or test weights from the weight recorded on the scale, dividing that amount by the known weight of the test material or test weights, and multiplying by 100.

(iv) Verify that the percent error in each scale test as determined in paragraph (b)(3)(iii)(F) of this section is less than or equal to 3 percent. If the error exceeds this amount the scale may be retested, recalibrated, or repaired. A scale test verifying that the scale is weighing accurately must be conducted and recorded before the vessel can continue weighing catch.

(v) Maintain the test report form on board the vessel until the end of the fishing year during which the tests were conducted and make the report forms available to observers, NMFS personnel, or an authorized officer. In addition, the scale test report forms must be retained by the vessel owner for 3 years after the end of the fishing year during which the tests were performed. All scale test report forms must be signed by the vessel operator.

(4) *Scale maintenance*. The vessel operator must maintain the scale in proper operating condition throughout the period of its use and assure that adjustments made to the scale are made so as to bring the performance errors as close as practicable to a zero value.

(5) *Printed reports from the scale*. Printed reports from the scale must be maintained on board the vessel until the end of the fishing year during which the reports were made and be made available to observers, NMFS personnel, or an authorized officer. In addition, printed reports must be retained by the vessel owner for 3 years after the end of the fishing year during which the printouts were made. All printed reports from the scale must be signed by the vessel operator.

(i) *Reports of catch weight*. Reports must be printed at least once each 24-hour period in which the scale is being used to weigh catch or before any information stored in the scale computer memory is replaced. The printed catch report must include the information specified in Appendix A, sections 2.3.1.8, 3.3.1.7, or 4.3.1.5. The haul or set number recorded on the scale print-out must correspond with haul or set numbers recorded in the processor's daily cumulative production logbook. Scale weights indicated by the scale may not be adjusted.

(ii) *Printed report of scale tests or adjustments*. The printed report must include the information specified in Appendix A, sections 2.3.1.11(b), 3.3.1.12(b), and 4.3.1.8(b). 3. Appendix A to Part 679 is added to read as follows:

Appendix A to Part 679—At-Sea Scales Handbook: Performance and Technical Requirements for At-Sea Scales in the Groundfish Fisheries off Alaska

Table of Contents

1.0 Introduction
2.0 Belt Scales
2.1 Applicability
2.2 Performance Requirements
2.2.1 Maximum Permissible Errors (mpe)
2.2.1.1 Laboratory Tests
2.2.1.2 Zero Load Tests
2.2.1.3 Material Tests
2.2.2 Minimum Flow Rate (Qmin)
2.2.3 Minimum Totalized Load (Σmin)
2.2.4 Influence Quantities
2.2.4.1 Temperature
2.2.4.2 Power Supply
2.3 Technical Requirements
2.3.1 Indicators and Printers
2.3.1.1 General
2.3.1.2 Values Defined
2.3.1.3 Units
2.3.1.4 Value of the Scale Division
2.3.1.5 Range of Indication
2.3.1.6 Resettable
2.3.1.7 Rate of Flow Indicator
2.3.1.8 Printed Information
2.3.1.9 Permanence of Markings
2.3.1.10 Power Loss
2.3.1.11 Adjustable Components
2.3.2 Weighing Elements
2.3.2.1 Speed Measurement
2.3.2.2 Conveyer Belt
2.3.2.3 Overload Protection
2.3.2.4 Speed Control
2.3.2.5 Adjustable Components
2.3.2.6 Motion Compensation
2.3.3 Installation Conditions
2.3.4 Marking
2.3.4.1 Presentation
2.4 Tests
2.4.1 Minimum Test Load
2.4.2 Laboratory Tests
2.4.2.1 Influence Quantity and Disturbance Tests
2.4.2.2 Zero Load Tests
2.4.2.3 Material Tests
2.4.3 Initial and Periodic Scale Inspections
2.4.3.1 Zero Load Tests
2.4.3.2 Material Tests
3.0 Automatic Hopper Scales
3.1 Applicability
3.2 Performance Requirements
3.2.1 Maximum Permissible Errors (mpe)
3.2.1.1 Laboratory Tests
3.2.1.2 Increasing and Decreasing Load Tests
3.2.2 Minimum Weighment (Σmin)
3.2.3 Minimum Totalized Load (Lot)
3.2.4 Influence Quantities
3.2.4.1 Temperature
3.2.4.2 Power Supply
3.3 Technical Requirements
3.3.1 Indicators and Printers
3.3.1.1 General
3.3.1.2 Values Defined
3.3.1.3 Units
3.3.1.4 Value of the Scale Division
3.3.1.5 Weighing Sequence
3.3.1.6 Printing Sequence
3.3.1.7 Printed Information
3.3.1.8 Permanence of Markings
3.3.1.9 Range of Indication
3.3.1.10 Non-resettable Values
3.3.1.11 Power Loss
3.3.1.12 Adjustable Components
3.3.1.13 Zero-Load Adjustment
3.3.1.14 Damping Means
3.3.2 Interlocks and Gate Control
3.3.3 Overfill Sensor
3.3.4 Weighing Elements
3.3.4.1 Overload Protection
3.3.4.2 Adjustable Components
3.3.4.3 Motion Compensation
3.3.5 Installation Conditions
3.3.6 Marking
3.3.6.1 Presentation
3.4 Tests
3.4.1 Standards
3.4.2 Laboratory Tests
3.4.2.1 Influence Quantity and Disturbance Tests
3.4.2.2 Performance Tests
3.4.3 Initial and Periodic Scale Inspections
4.0 Platform Scales and Hanging Scales
4.1 Applicability
4.2 Performance Requirements
4.2.1 Maximum Permissible Errors (mpe)
4.2.1.1 Laboratory Tests
4.2.1.2 Increasing and Decreasing Load and Shift Tests
4.2.2 Minimum Load
4.2.3 Influence Quantities
4.2.3.1 Temperature
4.2.3.2 Power Supply
4.3 Technical Requirements
4.3.1 Indicators and Printers
4.3.1.1 General
4.3.1.2 Values Defined
4.3.1.3 Units
4.3.1.4 Value of the Scale Division
4.3.1.5 Printed Information
4.3.1.6 Permanence of Markings
4.3.1.7 Power Loss
4.3.1.8 Adjustable Components
4.3.1.9 Zero-Load Adjustment
4.3.1.10 Damping Means
4.3.2 Weighing Elements
4.3.2.1 Overload Protection
4.3.2.2 Adjustable Components
4.3.2.3 Motion Compensation
4.3.3 Installation Conditions
4.3.4 Marking
4.3.4.1 Presentation
4.4 Tests
4.4.1 Standards
4.4.2 Laboratory Tests
4.4.2.1 Influence Quantities and Disturbance Tests
4.4.2.2 Performance Tests
4.4.3 Initial and Periodic Scale Inspections
5.0 Definitions
Annex A to Appendix A of Part 679—Influence Quantity and Disturbance Tests

A.1 General
A.2 Test considerations
A.3 Tests
A.3.1 Static Temperatures
A.3.2 Damp Heat, Steady State
A.3.3 Power Voltage Variation
A.3.4 Short Time Power Reduction
A.3.5 Bursts
A.3.6 Electrostatic Discharge
A.3.7 Electromagnetic Susceptibility

1.0 *Introduction*

(a) This handbook contains the performance and technical requirements for scales required under 50 CFR part 679 to weigh, at sea, catch from the groundfish fisheries off Alaska. These commercial fisheries are managed under the *Fishery Management Plan for Groundfish of the Gulf of Alaska* and the *Fishery Management Plan for the Groundfish Fishery of the Bering Sea and Aleutian Islands Area* which were prepared by the North Pacific Fishery Management Council under the Magnuson-Stevens Fishery Conservation and Management Act (16 U.S.C. 1801, *et seq.*).

(b) This handbook was prepared by the National Marine Fisheries Service, Alaska Regional Office, with the assistance of a contracted technical advisor. The performance and technical requirements in this document have not been reviewed or endorsed by the National Conference on Weights and Measures. The handbook is published by NMFS because specifications for scales used to weigh at sea have not been developed by any national or international weights and measures agency or organization.

(c) Revisions, amendments, or additions to this document may be made by notification in the **Federal Register** and an opportunity for public comment prior to a final decision on the amendments. Persons wishing to propose amendments should submit proposals in writing to the Administrator, Alaska Region, NMFS, P.O. Box 21668, Juneau, AK 99802.

(d) *Types of scales covered by handbook*—This handbook contains performance and technical requirements for four types of scales. Section 2 contains requirements for belt scales. Section 3 contains requirements for automatic hopper scales. Section 4 contains requirements for platform and hanging scales. Certification of any other devices for use to weigh catch at sea will require an amendment to § 679.28 and this handbook (Appendix A).

(e) *Testing and Certification Requirements for At-Sea Scales*—Scales used to weigh catch at sea are required to comply with performance and technical requirements in four categories:

(1) Type evaluation or laboratory tests of each model of scale,

(2) initial inspection by an authorized weights and measures inspector of each scale installed on a vessel; (3) periodic re-inspection by an authorized weights and measures inspector; and (4) at-sea tests of the scale's accuracy performed by vessel crew and witnessed by a NMFS-certified observer. This handbook contains only the performance and technical requirements for type evaluation and certification by a weights and measures inspector. Regulations implementing the requirements in this handbook and additional requirements for scales certified to weigh catch at sea are found at § 679.28.

2.0 *Belt Scales*

2.1 *Applicability*. The requirements in this section apply to a scale or scale system that employs a conveyor belt in contact with a weighing element to determine the weight of a bulk commodity being conveyed across the scale.

2.2 *Performance Requirements*—2.2.1 *Maximum Permissible Errors (mpe).* The following mpes are specified for laboratory tests and initial and periodic inspections of scales in a stationary installation. A stationary vessel refers to a vessel that is tied up at a dock or anchored near shore and is not under power at sea.

2.2.1.1 *Laboratory Tests.* Procedures for disturbance tests and influence factors are in Annex A. The following mpes are specified for these tests.

a. *Disturbances.* The mpe is ±0.18 percent of the weight of the load totalized.

b. *Influence Factors.* The mpe is ±0.25 percent of the weight of the load totalized.

c. *Temperature Effect at Zero Flow Rate.* The difference between the values obtained at zero flow rate taken at temperatures that differ by 10° C must not be greater than 0.035 percent of the weight of the load totalized at the maximum flow-rate for the time of the test.

2.2.1.2 *Zero Load Tests.* The mpe for zero load tests conducted in a laboratory or on a scale installed on a stationary vessel is ±0.1 percent or 1 scale division (d).

2.2.1.3 *Material Tests.* The mpe for material tests conducted in a laboratory or on a scale installed on a stationary vessel is ±1.0 percent of the known weight of the test material.

2.2.2 *Minimum Flow Rate (Qmin).* The minimum flow rate must be specified by the manufacturer and must not be greater than 35 percent of the rated capacity of the scale in kilograms (kg) or metric tons per hour (mt/hr).

2.2.3 *Minimum Totalized Load (*Σmin). The minimum totalized load must not be less than the greater of:

a. 2 percent of the load totalized in 1 hour at the maximum flow rate,

b. the load obtained at the maximum flow rate in 1 revolution of the belt, or

c. a load equal to 800 scale divisions (d).

2.2.4 *Influence Quantities.* The following requirements apply to influence factor tests conducted in the laboratory.

2.2.4.1 *Temperature.* A belt scale must comply with the performance and technical requirements at a range of temperatures from -10° C to +40° C. However, for special applications the temperature range may be different, but the range must not be less than 30° C and must be so specified on the descriptive markings.

2.2.4.2 *Power Supply.* A belt scale must comply with the performance and technical requirements when operated within a range of –15 percent to +10 percent of the power supply specified on the descriptive markings.

2.3 *Technical Requirements.*

2.3.1 *Indicators and Printers.*

2.3.1.1 *General.* A belt scale must be equipped with a primary indicator in the form of a master weight totalizer, a printer, and a rate of flow indicator. It must also be equipped with auxiliary means to indicate or print values for specified partial loads. The indications and printed representations must be clear, definite, accurate, and easily read under any conditions of normal operation of the belt scale.

2.3.1.2 *Values Defined.* If indications or printed representations are intended to have specific values, these must be defined by a sufficient number of figures, words, or symbols, uniformly placed with reference to the indications or printed representations and as close as practicable to the indications or printed representations, but not so positioned as to interfere with the accuracy of reading.

2.3.1.3 *Units.* The weight units indicated must be in terms of kilograms.

2.3.1.4 *Value of the Scale Division.* The value of the scale division (d) expressed in a unit of weight must be equal to 1, 2, or 5, or a decimal multiple or sub-multiple of 1, 2, or 5.

2.3.1.5 *Range of Indication.* The master weight totalizer must be capable of indicating at least 99,999,999 kilograms. The auxiliary means must be capable of indicating at least the weight of the amount of fish that can be harvested in 1 haul or set.

2.3.1.6 *Resettable.* The master weight totalizer must not be resettable to zero without breaking a security means. The auxiliary means to indicate or print specified partial loads must be resettable to zero.

2.3.1.7 *Rate of Flow Indicator.* Permanent means must be provided to produce an audio or visual signal when the rate of flow is less than the minimum flow rate or greater than 98 percent of the maximum flow rate.

2.3.1.8 *Printed Information.* The information printed must include:

a. For fish weight:

i. the Federal fisheries or processor permit number;

ii. the haul or set number;

iii. month, day, year, and time (to the nearest minute) weighing catch from the haul or set started;

iv. month, day, year, and time (to the nearest minute) weighing catch from the haul or set ended; and

v. the total cumulative weight of catch in the haul or set for each haul or set.

b. For the event logger: information specified in Section 2.3.1.11.b.

2.3.1.9 *Permanence of Markings.* All required indications, markings, and instructions must be distinct and easily readable and must be of such character that they will not tend to become obliterated or illegible.

2.3.1.10 *Power Loss.* In the event of a power failure, means must be provided to retain in a memory the totalized load.

2.3.1.11 *Adjustable Components.*

a. An adjustable component that can affect the performance of the scale must be held securely in position and must not be capable of adjustment without breaking a security means, or

b. An audit trail in the form of an event logger must provide the following information in electronic and printed form:

1. a unique identifying number from 000 to 999 to identify the type of adjustment being made to any parameter that affects the performance of the scale,

2. the parameter and amount of change,

3. the source of the change, and

4. the date and time (to the nearest minute) of the change.

2.3.2 *Weighing Elements.*

2.3.2.1 *Speed Measurement.* A belt scale must be equipped with means to accurately sense the belt travel and/or speed whether the belt is loaded or empty.

2.3.2.2 *Conveyer Belt.* The weight per unit length of the conveyor belt must be practically constant. Belt joints must be such that there are no significant effects on the weighing results.

2.3.2.3 *Overload Protection.* The load receiver must be equipped with means so that an overload of 150 percent or more of the capacity must not affect the metrological characteristics of the belt scale.

2.3.2.4 *Speed Control.* The speed of the belt must not vary by more than 5 percent of the nominal speed.

2.3.2.5 *Adjustable Components.* An adjustable component that can affect the performance of the belt scale must be held securely in position and must not be capable of adjustment without breaking a security means.

2.3.2.6 *Motion Compensation.* A belt scale must be equipped with automatic means to compensate for the motion of a vessel at sea so that the weight values indicated are within the maximum permissible errors. Such means shall be a reference load cell and a reference mass weight or other equally effective means. When equivalent means are utilized, the manufacturer must provide NMFS with laboratory or field test results demonstrating that the scale can weigh accurately at sea.

2.3.3 *Installation Conditions.* A belt scale must be rigidly installed in a level condition.

2.3.4 *Marking.* A belt scale must be marked with the following:

a. Name, initials, or trademark of the manufacturer or distributer.

b. Model designation.

c. Non-repetitive serial number.

d. Maximum flow rate (Qmax).

e. Minimum flow rate (Qmin).

f. Minimum totalized load (Σmin).

g. Belt speed.

h. Weigh length.

i. Maximum capacity (Max).

j. Temperature range (if applicable).

k. Mains voltage.

2.3.4.1 *Presentation.* The markings must be reasonably permanent and of such size, shape, and clarity to provide easy reading in normal conditions of use. They must be grouped together in a place visible to the operator.

2.4 *Tests.*

2.4.1 *Minimum Test Load.* The minimum test load must be the greater of:

a. 2 percent of the load totalized in 1 hour at the maximum flow rate,

b. the load obtained at maximum flow rate in one revolution of the belt, or

c. a load equal to 800 scale divisions.

2.4.2 *Laboratory Tests.*

2.4.2.1 *Influence Quantity and Disturbance Tests.* Tests must be conducted according to Annex A and the results of these tests must be within the values specified in section 2.2.1.1.

2.4.2.2 *Zero Load Tests.* A zero load test must be conducted for a time equal to that required to deliver the minimum totalized load (Σmin). At least two zero load tests must be conducted prior to a material test. The results of these tests must be within the values specified in section 2.2.1.2.

2.4.2.3 *Material Tests.* At least one material test must be conducted with the weight of the material or simulated material equal to or greater than the minimum test load. The results of these tests must be within the values specified in section 2.2.1.3.

2.4.3 *Initial and Periodic Scale Inspections.*

2.4.3.1 *Zero Load Tests.* A zero load test must be conducted for a time equal to that required to deliver the minimum totalized load (Σmin). At least one zero load test must be conducted prior to each material test. The results of this test must be within the values specified in section 2.2.1.2.

2.4.3.2 *Material Tests.* At least one material or simulated material test must be conducted with the weight of the material or simulated material equal to or greater than the minimum test load. The results of these tests must be within the values specified in section 2.2.1.3.

3.0 Automatic Hopper Scales

3.1 *Applicability.* The requirements in this section apply to a scale or scale system that is designed for automatic weighing of a bulk commodity in predetermined amounts.

3.2 *Performance Requirements*—3.2.1 *Maximum Permissible Errors (mpe).* The following mpes are specified for laboratory tests and initial and periodic inspections of scales in a stationary installation. A stationary vessel refers to a vessel that is tied up at a dock or anchored near shore and is not under power at sea.

3.2.1.1 *Laboratory Tests.* Procedures for disturbance tests and influence factors are in Annex A. The following mpes are specified for these tests.

a. *Disturbances.* Significant fault (sf) (±1 scale division).

b. *Influence Factors.* The mpe is ±0.1 percent of test load.

3.2.1.2 *Increasing and Decreasing Load Tests.* The mpe for increasing and decreasing load tests conducted in a laboratory or on a scale installed on a stationary vessel is ±1.0 percent of the test load.

3.2.2 *Minimum Weighment (*Σmin). The minimum weighment must not be less than 20 percent of the weighing capacity, or a load equal to 100 scale intervals (d), except for the final weighment of a lot.

3.2.3 *Minimum Totalized Load (Lot).* The minimum totalized load must not be less than 4 weighments.

3.2.4 *Influence Quantities.* The following requirements apply to influence factor tests conducted in the laboratory.

3.2.4.1 *Temperature.* A hopper scale must comply with the metrological and technical requirements at temperatures from −10° C to +40° C. However, for special applications the temperature range may be different, but the range must not be less than 30° C and must be so specified on the descriptive markings.

3.2.4.1.1 *Operating Temperature.* A hopper scale must not display or print any usable weight values until the operating temperature necessary for accurate weighing and a stable zero-balance condition have been attained.

3.2.4.2 *Power Supply.* A hopper scale must comply with the performance and technical requirements when operated within −15 percent to +10 percent of the power supply specified on the descriptive markings.

3.3 *Technical Requirements*—3.3.1 *Indicators and Printers*—3.3.1.1 *General.* A hopper scale must be equipped with an indicator and a printer that indicates and prints the weight of each load and a no-load reference value and also the total accumulated weight of a lot. It must also be equipped with auxiliary means to indicate or print values for a final partial load. The indications and printed information must be clear, definite, accurate, and easily read under any conditions of normal operation of the hopper scale.

3.3.1.2 *Values Defined.* If indications or printed representations are intended to have specific values, these must be defined by a sufficient number of figures, words, or symbols, uniformly placed with reference to the indications or printed representations and as close as practicable to the indications or printed representations but not so positioned as to interfere with the accuracy of reading.

3.3.1.3 *Units.* The weight units indicated must be in terms of kilograms.

3.3.1.4 *Value of the Scale Division.* The value of the scale division (d) expressed in a unit of weight must be equal to 1, 2, or 5, or a decimal multiple or sub-multiple of 1, 2, or 5.

3.3.1.5 *Weighing Sequence.* For hopper scales used to receive (weigh in), the no-load reference value must be determined and printed only at the beginning of each weighing cycle. For hopper scales used to deliver (weigh out), the no-load reference value must be determined and printed only after the gross load weight value for each weighing cycle has been indicated and printed.

3.3.1.6 *Printing Sequence.* Provision must be made so that all weight values are indicated until the completion of the printing of the indicated values.

3.3.1.7 *Printed Information.* The information printed must include:

a. For fish weight:

i. The Federal fisheries or processor permit number.

ii. The haul or set number.

iii. Month, day, year, and time (to the nearest minute) that weighing catch from the haul or set started.

iv. Month, day, year, and time (to the nearest minute) that weighing catch from the haul or set ended.

v. Net weight of the individual loads and the totalized weight of the fish in a haul or set.

b. For the event logger: Information specified in Section 3.3.1.12.b.

3.3.1.8 *Permanence of Markings.* All required indications, markings, and instructions must be distinct and easily readable and must be of such character that

they will not tend to become obliterated or illegible.

3.3.1.9 *Range of Indication.* The total accumulated weight indicator and printer must be capable of indicating and printing at least 99,999,999 kg. The auxiliary means must be capable of indicating at least the weight of the amount of fish that can be harvested in 1 haul or set.

3.3.1.10 *Non-resettable Values.* The totalized accumulated weight must not be resettable to zero without breaking a security means.

3.3.1.11 *Power Loss.* In the event of a power failure, means must be provided to retain in a memory the total accumulated weight.

3.3.1.12 *Adjustable Components.*

a. An adjustable component that can affect the performance of the hopper scale must be held securely in position and must not be capable of adjustment without breaking a security means, or

b. An audit trail in the form of an event logger must provide the following information in electronic and printed form:

1. A unique identifying number from 000 to 999 to identify the type of adjustment being made to any parameter that affects the performance of the scale.
2. The parameter and amount of change.
3. The source of the change.
4. The date and time (to the nearest minute) of the change.

3.3.1.13 *Zero-Load Adjustment.* A hopper scale must be equipped with a manual or semi-automatic (push-button) means that can be used to adjust the zero-load balance or no-load reference value.

3.3.1.13.1 *Manual.* A manual means must be operable or accessible only by a tool outside of, or entirely separate from, this mechanism or enclosed in a cabinet.

3.3.1.13.2 *Semi-automatic.* A semi-automatic means must only be operable when the indication is stable within ±1 scale division, and cannot be operated during a weighing cycle (operation).

3.3.1.14 *Damping Means.* A hopper scale must be equipped with effective automatic means to bring the indications quickly to a readable stable equilibrium. Effective automatic means must also be provided to permit the recording of weight values only when the indication is stable within plus or minus one scale division.

3.3.2 *Interlocks and Gate Control.* A hopper scale must have operating interlocks so that:

a. Product cannot be weighed if the printer is disconnected or subject to a power loss.

b. The printer cannot print a weight if either of the gates leading to or from the weigh hopper is open.

c. The low paper sensor of the printer is activated.

d. The system will operate only in the sequence intended.

e. If the overfill sensor is activated, this condition is indicated to the operator and printed.

3.3.3 *Overfill Sensor.* The weigh hopper must be equipped with an overfill sensor that will cause the feed gate to close, activate an alarm, and stop the weighing operation until the overfill condition has been corrected.

3.3.4 *Weighing Elements.*

3.3.4.1 *Overload Protection.* The weigh hopper must be equipped with means so that an overload of 150 percent or more of the capacity of the hopper must not affect the metrological characteristics of the belt scale.

3.3.4.2 *Adjustable Components.* An adjustable component that can affect the performance of the hopper scale must be held securely in position and must not be capable of adjustment without breaking a security means.

3.3.4.3 *Motion Compensation.* A hopper scale must be equipped with automatic means to compensate for the motion of a vessel at sea so that the weight values indicated are within the maximum permissible errors. Such means shall be a reference load cell and a reference mass weight or other equally effective means. When equivalent means are utilized, the manufacturer must provide NMFS with laboratory or field test results demonstrating that the scale can weigh accurately at sea.

3.3.5 *Installation Conditions.* A hopper scale must be rigidly installed in a level condition.

3.3.6 *Marking.* A hopper scale must be marked with the following:

a. Name, initials, or trademark of the manufacturer or distributer.
b. Model designation.
c. Non-repetitive serial number.
d. Maximum capacity (Max).
e. Minimum capacity (min).
f. Minimum totalized load (Σmin).
g. Minimum weighment.
h. Value of the scale division (d).
i. Temperature range (if applicable).
j. Mains voltage.

3.3.6.1 *Presentation.* Descriptive markings must be reasonably permanent and grouped together in a place visible to the operator.

3.4 *Tests.*

3.4.1 *Standards.* The error of the standards used must not exceed 25 percent of the mpe to be applied.

3.4.2 *Laboratory Tests.*

3.4.2.1 *Influence Quantity and Disturbance Tests.* Tests must be conducted according to Annex A and the results of these tests must be within the values specified in section 3.2.1.1.

3.4.2.2 *Performance Tests.* Performance tests must be conducted as follows:

a. *Increasing load test.* At least five increasing load tests must be conducted with test loads at the minimum load, at a load near capacity, and at 2 or more critical points in between.

b. *Decreasing load test.* A decreasing load test must be conducted with a test load approximately equal to one-half capacity when removing the test loads of an increasing load test.

3.4.3 *Initial and Periodic Scale Inspections.*

At least two increasing load tests and two decreasing load tests must be conducted as specified in 3.4.2.2. Additionally, tests must be conducted with test loads approximately equal to the weight of loads at which the scale is normally used.

4.0 *Platform Scales and Hanging Scales*

4.1 *Applicability.* The requirements in this section apply to platform and hanging scales.

4.2 *Performance Requirements.*

4.2.1 *Maximum Permissible Errors (mpe).* The following mpes are specified for laboratory tests and initial and periodic inspections of scales in a stationary installation. A stationary vessel refers to a vessel that is tied up at a dock or anchored near shore and is not under power at sea.

4.2.1.1 *Laboratory Tests.* Procedures for disturbance tests and influence factors are in Annex A. The following mpes are specified for these tests.

a. *Disturbances.* Significant fault (±1 scale division)

b. *Influence Factors.* Mpes are in Table 1 below.

4.2.1.2 *Increasing and Decreasing Load and Shift Tests.* The mpes for increasing and decreasing load and shift tests conducted in a laboratory or on a scale installed on a stationary vessel are in Table 1.

TABLE 1

Test load in scale divisions (d)		Maximum permissible error (d)	
Class III	Class IIII	Type Evaluation and Initial verification	In-service
0 < m* ≤ 500	0 < m ≤ 50	0.5	1
500 < m ≤ 2000	50 < m ≤ 200	1.0	2
2000 < m	200 < m	1.5	3

*Mass or weight of the test load.

4.2.2 *Minimum Load:* Class III scale 20 d, Class III scale 10 d.

4.2.3 *Influence Quantities.* The following requirements apply to influence factor tests conducted in the laboratory.

4.2.3.1 *Temperature.* A scale must comply with the performance and technical requirements at temperatures from −10° C to +40° C. However, for special applications the temperature range may be different, but the range must not be less than 30° C and must be so specified on the descriptive markings.

4.2.3.1.1 *Operating Temperature.* A scale must not display or print any usable weight values until the operating temperature necessary for accurate weighing and a stable zero-balance condition have been attained.

4.2.3.2 *Power Supply.* A scale must comply with the performance and technical requirements when operated within −15 percent to +10 percent of the power supply specified on the descriptive markings.

4.3 *Technical Requirements*—4.3.1 *Indicators and Printers*—4.3.1.1 *General.* A scale must be equipped with an indicator and a printer. The indications and printed information must be clear, definite, accurate, and easily read under any conditions of normal operation of the scale.

4.3.1.2 *Values Defined.* If indications or printed representations are intended to have specific values, these must be defined by a sufficient number of figures, words, or symbols, uniformly placed with reference to the indications or printed representations and as close as practicable to the indications or printed representations, but not so positioned as to interfere with the accuracy of reading.

4.3.1.3 *Units.* The weight units indicated must be in terms of kilograms and decimal subdivisions.

4.3.1.4 *Value of the Scale Division.* The value of the scale division (d) expressed in a unit of weight must be equal to 1, 2, or 5, or a decimal multiple or sub-multiple of 1, 2, or 5.

4.3.1.5 *Printed Information.* The information printed must include:

a. For fish weight:

i. The Federal fisheries or processor permit number.

ii. The haul or set number.

iii. Month, day, year, and time (to the nearest minute) of weighing.

iv. Net weight of the fish.

v. For the event logger: information specified in section 4.3.1.8.

4.3.1.6 *Permanence of Markings.* All required indications, markings, and instructions must be distinct and easily readable and must be of such character that they will not tend to become obliterated or illegible.

4.3.1.7 *Power Loss.* In the event of a power failure, means must be provided to retain in a memory the weight of the last weighment if it is a non-repeatable weighment.

4.3.1.8 *Adjustable Components.*

a. An adjustable component that can affect the performance of the scale must be held securely in position and must not be capable of adjustment without breaking a security means, or

b. An audit trail in the form of an event logger must provide the following information in electronic and printed form:

1. A unique identifying number from 000 to 999 to identify the type of adjustment being made to any parameter that affects the performance of the scale.

2. The parameter and amount of change.

3. The source of the change.

4. The date and time (to the nearest minute) of the change.

4.3.1.9 *Zero-Load Adjustment.* A scale must be equipped with a manual or semi-automatic (push-button) means that can be used to adjust the zero-load balance or no-load reference value.

4.3.1.9.1 *Manual.* A manual means must be operable or accessible only by a tool outside of or entirely separate from this mechanism or enclosed in a cabinet.

4.3.1.9.2 *Semi-automatic.* A semi-automatic means must meet the provisions of 3.1.8 or must only be operable when the indication is stable within ±1 scale division and cannot be operated during a weighing cycle (operation).

4.3.1.10 *Damping Means.* A scale must be equipped with effective automatic means to bring the indications quickly to a readable stable equilibrium. Effective automatic means must also be provided to permit the recording of weight values only when the indication is stable within plus or minus one scale division.

4.3.2 *Weighing Elements*—4.3.2.1 *Overload Protection.* The scale must be so designed that an overload of 150 percent or more of the capacity must not affect the metrological characteristics of the scale.

4.3.2.2 *Adjustable Components.* An adjustable component that can affect the performance of the scale must be held securely in position and must not be capable of adjustment without breaking a security means.

4.3.2.3 *Motion Compensation.* A hopper scale must be equipped with automatic means to compensate for the motion of a vessel at sea so that the weight values indicated are within the maximum permissible errors. Such means shall be a reference load cell and a reference mass weight or other equally effective means. When equivalent means are utilized, the manufacturer must provide NMFS with laboratory or field test results demonstrating that the scale can weigh accurately at sea.

4.3.3 *Installation Conditions.* A platform scale must be rigidly installed in a level condition. A hanging scale must be freely suspended from a fixed support or a crane when in use.

4.3.4 *Marking.* A scale must be marked with the following:

a. Name, initials, or trademark of the manufacturer or distributer.

b. Model designation.

c. Non-repetitive serial number.

d. Maximum capacity (Max).

e. Minimum capacity (min).

f. Temperature range (if applicable).

g. Mains voltage.

4.3.4.1 *Presentation.* Descriptive markings must be reasonably permanent and grouped together in a place visible to the operator.

4.4 *Tests.*

4.4.1 *Standards.* The error of the standards used must not exceed 25 percent of the mpe applied.

4.4.2 *Laboratory Tests*—4.4.2.1 *Influence Quantities and Disturbance Tests.* Tests must be conducted according to Annex A and the results of these tests must be within the values specified in section 4.2.1.1.

4.4.2.2 *Performance Tests.* Performance tests must be conducted as follows:

a. *Increasing load test.* At least five increasing load tests must be conducted with test loads at the minimum load, at a load near capacity, and at 2 or more critical points in between.

b. *Shift test (platform scales only).* A shift test must be conducted during the increasing load test at one-third capacity test load centered in each quadrant of the platform.

c. *Decreasing load test.* A decreasing load test must be conducted with a test load approximately equal to one-half capacity when removing the test loads of an increasing load test.

4.4.3 *Initial and Periodic Scale Inspections.*

At least two increasing load tests, shift tests, and decreasing load tests must be conducted as specified in 4.4.2.2. Additionally tests must be conducted with test loads approximately equal to the weight of loads at which the scale is normally used. The results of all tests must be as specified in Table 1.

5.0 *Definitions*

Audit trail—An electronic count and/or information record of the changes to the values of the calibration or configuration parameters of a device.

Automatic Hopper Scale—A hopper scale adapted to the automatic weighing of a bulk commodity (fish) in predetermined amounts. Capacities vary from 50 lb (22.7 kg) to 100,000 lb (45.36 mt). Generally equipped with a control panel, with functions to be set by an operator, including the start of an automatic operation. (See definition of hopper scale).

Belt Scale—A scale that employs a conveyor belt in contact with a weighing element to determine the weight of a bulk commodity being conveyed. It is generally a part of a system comprised of an input conveyor, the flow scale, and an output conveyor. The conveyor belt may be constructed of various materials, including vulcanized rubber, canvas, and plastic. The capacity is generally specified in terms of the amount of weight that can be determined in a specified time, and can vary from for example 1 ton per hour to 100 or more tons per hour. An operator generally directs the flow of product onto the input conveyor.

Calibration Mode—A means by which the span of a scale can be adjusted by placing a known ''test weight'' on the scale and manually operating a key on a key board.

Disturbances—An influence that may occur during the use of a scale but is not within the rated operating conditions of the scale.

Event logger—A form of audit trail containing a series of records where each record contains the number from the event counter corresponding to the change to a

sealable parameter, the identification of the parameter that was changed, the time and date when the parameter was changed, and the new value of the parameter.

Final Weighment—The last partial load weighed on a hopper scale that is part of the weight of many loads (haul, set, etc.).

Hanging Scale—A scale that is designed to weigh a load that is freely suspended from an overhead crane or it may be permanently installed in an overhead position. The load receiver may be a part of the scale such as a pan suspended on chains, or simply a hook that is used to ''pick-up'' the container of the commodity to be weighed. The technology employed may be mechanical, electro-mechanical, or electronic. The loads can be applied either manually or by such means as a crane.

Hopper Scale—A scale designed for weighing individual loads of a bulk commodity (fish). The load receiver is a cylindrical or rectangular container mounted on a weighing element. The weighing element may be mechanical levers, a combination of levers and a load cell, or all load cells. The capacity can vary from ≤ 50 lb (22.7 kg) to > 100,000 lb (45.36 mt). The loads are applied from a bulk source by such means as a conveyor or storage hopper. Each step of the weighing process, that is the loading and unloading of the weigh hopper, is controlled by an operator.

Indicator—That part of a scale that indicates the quantity that is being weighed.

Influence Factor—A value of an influence quantity, e.g., 10°, that specifies the limits of the rated operating conditions of the scale.

Influence Quantity—A quantity that is not the subject of the measurement but which influences the measurement obtained within the rated operating conditions of the scale.

Influence Quantity and Disturbance Tests—Type evaluation tests conducted in a laboratory to determine the capability of the scale under test to perform correctly in the environmental influences in which they are used and when subjected to certain disturbances that may occur during the use of the scale.

Initial Verification—The first evaluation (inspection and test) of a production model of a weighing instrument that has been type evaluated to determine that the production model is consistent with the model that had been submitted for type evaluation.

Known Weight Test—A test in which the load applied is a test weight with a known value simulating the weight of the material that is usually weighed.

Load Receiver—That part of the scale in which the quantity is placed when being weighed.

Material Test—A test using a material that is the same or similar to the material that is usually weighed, the weight of which has been determined by a scale other than the scale under test.

Maximum flow-rate—The maximum flow-rate of material specified by the manufacturer at which a belt scale can perform correctly.

Minimum flow-rate—The minimum flow-rate specified by the manufacturer at which a belt scale can perform correctly.

Minimum Load—The smallest weight load that can be determined by the scale that is considered to be metrologically acceptable.

Minimum Totalized Load—The smallest weight load that can be determined by a belt scale that is considered to be metrologically acceptable.

Minimum Weighment—The smallest weight that can be determined by a hopper scale that is considered to be metrologically acceptable.

Motion Compensation—The means used to compensate for the motion of the vessel at sea.

No-load Reference Value—A weight value obtained by a hopper scale when the load receiver (hopper) is empty of the product that was or is to be weighed.

Non-repeatable Weighment—A process where the product after being weighed is disposed with in such a manner that it cannot be retrieved to be reweighed.

Number of Scale Divisions (n)—The number of scale divisions of a scale in normal operation. It is the quotient of the scale capacity divided by the value of the scale division. n = Max/d

Performance Requirements—A part of the regulations or standards that applies to the weighing performance of a scale, e.g., maximum permissible errors.

Performance Test—A test conducted to determine that the scale is performing within the maximum permissible errors applicable.

Periodic Verification—A verification of a weighing instrument at an interval that is specified by regulation or administrative ruling.

Platform Scale—A scale by the nature of its physical size, arrangement of parts, and relatively small capacity (generally 500 lb (226.8 kg) or less) that is adapted for use on a bench or counter or on the floor. Load receiver dimensions include, for example, 5 × 5 inches (12.25 × 12.24 cm), 18 × 24 inches (45.7 × 61.0 cm), and 30 × 30 inches (76.2 × 76.2 cm). A platform scale can be self contained, that is, the indicator and load receiver and weighing elements are all comprised of a single unit, or the indicator can be connected by cable to a separate load receiver and weighing element. The technology used may be mechanical, electro-mechanical, or electronic. Loads are applied manually.

Rated Capacity—The maximum flow-rate in terms of weight per unit time specified by the manufacturer at which a belt scale can perform correctly.

Scale Division (d)—The smallest digital subdivision in units of mass that is indicated by the weighing instrument in normal operation.

Sealing—A method used to prevent the adjustment of certain operational characteristics or to indicate that adjustments have been made to those operational characteristics.

Security Seals or Means—A physical seal such as a lead and wire seal or a key or code that when a change is made in the operating or performance characteristics of a scale it becomes evident.

Significant Fault—An error greater than the value specified for a particular scale. For a belt scale: A fault greater than 0.18 percent of the weight value equal to the minimum totalized load. For all other scales: 1 scale division (d). A significant fault does not include faults that result from simultaneous and mutually independent causes in the belt scale; faults that imply the impossibility of performing any measurement; transitory faults that are momentary variations in the indications that cannot be interpreted, memorized, or transmitted as a measurement result; faults so serious that they will inevitably be noticed by those interested in the measurement.

Simulated Material Test—A test in which the load applied is test material simulating the weight of the material that is usually weighed.

Simulated Test—A test in which the weight indications are developed by means other than weight, e.g., a load cell simulator.

Stationary Installation—An installation of a scale in a facility on land or a vessel that is tied-up to a dock or in dry dock.

Subsequent Verification—Any evaluation of a weighing instrument following the initial verification.

Suitability for Use—A judgement that must be made that certain scales by nature of their design are appropriate for given weighing applications.

Technical Requirements—A part of the regulations or standards that applies to the operational functions and characteristics of a scale, e.g., capacity, scale division, tare.

Testing Laboratory—A facility for conducting type evaluation examinations of a scale that can establish its competency and proficiency by such means as ISO Guide 25, ISO 9000, EN 45011, NVLAP, NTEP).

Type Evaluation—A process for evaluating the compliance of a weighing instrument with the appropriate standard or regulation.

User Requirements—A part of the regulations or standards that applies to the operator/owner of the scale.

Weighment—A single complete weighing operation.

Annex A to Appendix A—Influence Quantity and Disturbance Tests

A.1 General—Included in this Annex are tests that are intended to ensure that electronic scales can perform and function as intended in the environment and under the conditions specified. Each test indicates, where appropriate, the reference condition under which the intrinsic error is determined.

A.2 Test Considerations

A.2.1 All electronic scales of the same category must be subjected to the same performance test program.

A.2.2 Tests must be carried out on fully operational equipment in their normal operational state. When connected in other than a normal configuration, the procedure must be mutually agreed to by NMFS and the applicant.

A.2.3 When the effect of one factor is being evaluated, all other factors are to be held relatively constant, at a value close to normal.

A.2.3.1 The temperature is deemed to be practically constant when the difference between the extreme temperatures noted during the test does not exceed 5° C and the variation in time does not exceed 5° C per hour.

A.2.4 Energize the equipment under test (EUT) for a period of time at least equal to the warm-up time specified by the manufacturer and maintain throughout the duration of the test.

A.3 Tests

Test	Characteristics under test	Conditions applied
A.3.1 Static temperatures.	Influence factor.	mpe
A.3.2 Damp heat, steady state.	Influence factor.	mpe
A.3.3 Power voltage variation.	Influence factor.	mpe
A.3.4 Short time power reduction.	Disturbance	sf
A.3.5 Bursts	Disturbance	sf
A.3.6 Electrostatic discharge.	Disturbance	sf
A.3.7 Electromagnetic susceptibility.	Disturbance	sf

A.3 Tests

A.3.1 Static Temperatures

Test method: Dry heat (non condensing) and cold.

Object of the test: To verify compliance with the applicable maximum permissible under conditions of high and low temperature.

Reference to standard: See Bibliography (1).

Test procedure in brief: The test consists of exposure of the EUT to the high and low temperatures specified in section 2.2.4.1 for belt scales, section 3.2.4.1 for automatic hopper scales, and section 4.2.3.1 for platform scales and hanging scales, under ''free air'' condition for a 2-hour period after the EUT has reached temperature stability. The EUT must be tested during a weighing operation consisting of:

For belt scales—the totalization of the Σ_{min}, 2 times each at approximately the minimum flow rate, an intermediate flow rate, and the maximum flow rate.

For platform, hanging, and automatic hopper scales—tested with at least five different test loads or simulated loads under the following conditions:

a. At a reference temperature of 20 °C following conditioning.

b. At the specified high temperature, 2 hours after achieving temperature stabilization.

c. At the specified low temperature, 2 hours after achieving temperature stabilization.

d. At a temperature of 5° C, 2 hours after achieving temperature stabilization.

e. After recovery of the EUT at the reference temperature of 20° C.

Test severities: Duration: 2 hours.

Number of test cycles: At least one cycle.

Maximum allowable variations:

All functions must operate as designed.

All indications must be within the applicable maximum permissible errors.

Conduct of test: Refer to the International Electrotechnical Commission (IEC) Publications mentioned in Bibliography (1) for detailed test procedures.

Supplementary information to the IEC test procedures

Preconditioning: 16 hours.

Condition of EUT: Normal power supplied and ''on'' for a time period equal to or greater than the warm-up time specified by the manufacturer. Power is to be ''on'' for the duration of the test.

Adjust the EUT as close to a zero indication as practicable prior to the test.

Test sequence:

Stabilize the EUT in the chamber at a reference temperature of 20° C. Conduct the tests as specified in the test procedure in brief and record the following data:

a. Date and time.

b. Temperature.

c. Relative humidity.

d. Test load.

e. Indication.

f. Errors.

g. Functions performance.

Increase the temperature in the chamber to the high temperature specified. Check by measurement that the EUT has reached temperature stability and maintain the temperature for 2 hours. Following the 2 hours, repeat the tests and record the test data indicated above.

Reduce the temperature in the chamber as per the IEC procedures to the low temperature specified. After temperature stabilization, allow the EUT to soak for 2 hours. Following the 2 hours, repeat the tests and record the test data as indicated above.

Raise the temperature in the chamber as per the IEC procedures to 5° C. After temperature stabilization, allow the EUT to soak for 2 hours. Following the 2 hours, repeat the tests and record the test data as indicated above. Note: This test relates to a −10° C to +40° C range. For special ranges, it may not be necessary.

Raise the temperature in the chamber as per the IEC procedures and to the 20° C reference temperature. After recovery, repeat the tests and record the test data as indicated above.

A.3.2 Damp Heat, Steady State

Test method: Damp heat, steady state.

Object of the test: To verify compliance with the applicable maximum permissible errors under conditions of high humidity and constant temperature.

Reference to standard: See Bibliography (2).

Test procedure in brief: The test consists of exposure of the EUT to a constant temperature at the upper limit of the temperature range and a constant relative humidity of 85 percent for a two day period. The EUT must be tested during a weighing operation consisting of:

For belt scales—the totalization of the Σ_{min}, 2 times each at approximately the minimum flow rate, an intermediate flow rate, and the maximum flow rate.

For platform, hanging, and automatic hopper scales—tested with at least five different test loads or simulated loads at a reference temperature of 20° C and a relative humidity of 50 percent following conditioning, and at the upper limit temperature and a relative humidity of 85 percent, 2 days following temperature and humidity stabilization.

Test severities:

Temperature: upper limit.

Humidity: 85 percent (non-condensing).

Duration: 2 days.

Number of test cycles: At least one test.

Maximum allowable variations:

All functions must operate as designed.

All indications must be within the applicable maximum permissible errors.

Conduct of the test: Refer to the IEC Publications mentioned in Bibliography (2) for detailed test procedures.

Supplementary information to the IEC test procedures

Preconditioning: None required.

Condition of EUT:

Normal power supplied and ''on'' for a time period equal to or greater than the warm-up time specified by the manufacturer. Power is to be ''on'' for the duration of the test.

The handling of the EUT must be such that no condensation of water occurs on the EUT.

Adjust the EUT as close to a zero indication as practicable prior to the test.

Test sequence:

Allow 3 hours for stabilization of the EUT at a reference temperature of 20° C and a relative humidity of 50 percent. Following stabilization, conduct the tests as specified in the test procedures in brief and record the following data:

a. Date and time.

b. Temperature.

c. Relative humidity.

d. Test load.

e. Indication.

f. Errors.

g. Functions performance.

Increase the temperature in the chamber to the specified high temperature and a relative humidity of 85 percent. Maintain the EUT at no load for a period of 2 days. Following the 2 days, repeat the tests and record the test data as indicated above.

Allow full recovery of the EUT before any other tests are performed.

A.3.3 *Power Voltage Variation*

A.3.3.1 *AC power supply*

Test method: Variation in AC mains power supply (single phase).

Object of the test: To verify compliance with the applicable maximum permissible errors under conditions of varying AC mains power supply.

Reference to standard: See Bibliography (3)

Test procedure in brief: The test consists of subjecting the EUT to AC mains power during a weighing operation consisting of:

For belt scales—while totalizing the Σ_{min} at the maximum flow rate.

For platform, hanging, and automatic hopper scales—at no load and a test load between 50 percent and 100 percent of weighing capacity.

Test severities: Mains voltage: upper limit U (nom) +10 percent; lower limit U (nom) −15 percent.

Number of test cycles: At least one cycle.

Maximum allowable variations:

All functions must operate correctly.

All indications must be within maximum permissible errors specified in sections 2, 3, or 4 of this handbook.

Conduct of the test:

Preconditioning: None required.

Test equipment: Variable power source, Calibrated voltmeter, Load cell simulator, if applicable.

Condition of EUT:

Normal power supplied and ''on'' for a time period equal to or greater than the warm-up time specified by the manufacturer.

Adjust the EUT as close to a zero indication as practicable prior to the test.

Test sequence:

Stabilize the power supply at nominal voltage ±2 percent.

Conduct the tests specified in the test procedure in brief and record the following data:

date and time,
temperature,
relative humidity,
power supply voltage,
test load,
indications,
errors,
functions performance.

Reduce the power supply to −15 percent nominal.

Repeat the test and record the test data as indicated above.

Increase the power supply to +10 percent nominal.

Repeat the test and record the test data as indicated above.

Unload the EUT and decrease the power supply to nominal power ±2 percent.

Repeat the test and record the test data as indicated above.

Note: In case of three phase power supply, the voltage variation must apply for each phase successively. Frequency variation applies for all phases simultaneously.

A.3.3.2 *DC power supply*

Under consideration.

A.3.4 *Short Time Power Reduction*

Test method: Short time interruptions and reductions in mains voltage.

Object of the test: To verify compliance with the applicable significant fault under conditions of short time mains voltage interruptions and reductions.

Reference to standard: See Bibliography (4) IEC Publication 1000–4–11 (1994).

Test procedure in brief: The test consists of subjecting the EUT to voltage interruptions from nominal voltage to zero voltage for a period equal to 8–10 ms, and from nominal voltage to 50 percent of nominal for a period equal to 16–20 ms. The mains voltage interruptions and reductions must be repeated ten times with a time interval of at least 10 seconds. This test is conducted during a weighing operation consisting of:

For belt scales—while totalizing at the maximum flow rate at least the Σ_{min} (or a time sufficient to complete the test).

For platform, hanging, and automatic hopper scales—tested with one small test load or simulated load.

Test severities: One hundred percent voltage interruption for a period equal to 8–10 ms. Fifty percent voltage reduction for a period equal to 16–20 ms.

Number of test cycles: Ten tests with a minimum of 10 seconds between tests.

Maximum allowable variations: The difference between the weight indication due to the disturbance and the indication without the disturbance either must not exceed 1 d or the EUT must detect and act upon a significant fault.

Conduct of the test:

Preconditioning: None required.

Test equipment:

A test generator suitable to reduce the amplitude of the AC voltage from the mains. The test generator must be adjusted before connecting the EUT.

Load cell simulator, if applicable.

Condition of EUT:

Normal power supplied and ''on'' for a time period equal to or greater than the warm-up time specified by the manufacturer.

Adjust the EUT as close to zero indication as practicable prior to the test.

Test sequence:

Stabilize all factors at nominal reference conditions.

Totalize as indicated above and record the following data:

date and time,
temperature,
relative humidity,
power supply voltage,
test load,
indications,
errors,
functions performance.

Interrupt the power supply to zero voltage for a period equal to 8–10 ms. During interruption observe the effect on the EUT and record, as appropriate.

Repeat the above 4 additional times making sure that there is a 10 second interval between repetitions. Observe the effect on the EUT.

Reduce the power supply to 50 percent of nominal voltage for a period equal to 16–20 ms. During reduction observe the effect on the EUT and record, as appropriate.

Repeat the above 4 additional times making sure that there is a 10 second interval between repetitions. Observe the effect on the EUT.

A.3.5 *Bursts*

Test method: Electrical bursts.

Object of the test: To verify compliance with the provisions in this manual under conditions where electrical bursts are superimposed on the mains voltage.

Reference to standard: See Bibliography (5)

Test procedure in brief:

The test consists of subjecting the EUT to bursts of double exponential wave-form transient voltages. Each spike must have a rise in time of 5 ns and a half amplitude duration of 50 ns. The burst length must be 15 ms, the burst period (repetition time interval) must be 300 ms. This test is conducted during a weighing operation consisting of:

For belt scales—while totalizing at the maximum flow rate at least the Σ_{min} (or a time sufficient to complete the test).

For platform, hanging, and automatic hopper scales—tested with one small test load or simulated load.

Test severities: Amplitude (peak value) 1000 V.

Number of test cycles: At least 10 positive and 10 negative randomly phased bursts must be applied at 1000 V.

Maximum allowable variations: The difference between the indication due to the disturbance and the indication without the disturbance either must not exceed the values given in section T.5.5, or the EUT must detect and act upon a significant fault.

Conduct of the test: Refer to the IEC Publication referenced in Bibliography (5) for detailed test procedures.

Supplementary information to the IEC test procedures:

Test equipment:

A burst generator having an output impedance of 50 ohms.

Test conditions:

The burst generator must be adjusted before connecting the EUT. The bursts must be coupled to the EUT both on common mode and differential mode interference.

Condition of EUT: Normal power supplied and ''on'' for a time period equal to or greater than the warm-up time specified by the manufacturer.

Adjust the EUT as close to a zero indication as practicable prior to the test.

Test sequence:

Stabilize all factors at nominal reference conditions.

Conduct the test as indicated above and record the following data:

date and time,
temperature,
relative humidity,
test load,
indication,
errors,
functions performance.

Subject the EUT to at least 10 positive and 10 negative randomly phased bursts at the 1000 V mode. Observe the effect on the EUT and record, as appropriate.

Stabilize all factors at nominal reference conditions.

Repeat the test and record the test data as indicated above.

A.3.6 Electrostatic Discharge

Test method: Electrostatic discharge (ESD).

Object of the test: To verify compliance with the provisions of this manual under conditions of electrostatic discharges.

Reference to standard: See Bibliography (6)

Test procedure in brief:

A capacitor of 150 pF is charged by a suitable DC voltage source. The capacitor is then discharged through the EUT by connecting one terminal to ground (chassis) and the other via 150 ohm to surfaces which are normally accessible to the operator. This test is conducted during a weighing operation consisting of:

For belt scales—while totalizing at the maximum flow rate at least the Σ_{min} (or a time sufficient to complete the test).

For platform, hanging, and automatic hopper scales—test with one small test load or simulated load.

Test severities:

Air Discharge: up to and including 8 kV.

Contact Discharge: up to and including 6 kV.

Number of test cycles: At least 10 discharges must be applied at intervals of at least 10 seconds between discharges.

Maximum allowable variations:

The difference between the indication due to the disturbance and the indication without the disturbance either must not exceed the values indicated in section T.5.5, or the EUT must detect and act upon a significant fault.

Conduct of the test: Refer to the IEC Publication mentioned in Bibliography (4) for detailed test procedures.

Supplementary information to the IEC test procedures

Preconditioning: None required.

Condition of EUT:

The EUT without a ground terminal must be placed on a grounded plate which projects beyond the EUT by at least 0.1 m on all sides. The ground connection to the capacitor must be as short as possible.

Normal power supplied and ''on'' for a time period equal to or greater than the warm-up time specified by the manufacturer. Power is to be ''on'' for the duration of the test.

The EUT must be operating under standard atmospheric conditions for testing.

Adjust the EUT as close to a zero indication as practicable prior to the test.

Test sequence:

Stabilize all factors at nominal reference conditions.

Conduct test as indicated above and record and the following data:

date and time,
temperature,
relative humidity,
power supply voltage,
test load,
indication,
errors,
functions performance.

Approach the EUT with the discharge electrode until discharge occurs and then remove it before the next discharge. Observe the effect of the discharge on the EUT and record, as appropriate.

Repeat the above step at least 9 more times, making sure to wait at least 10 seconds between successive discharges. Observe the effect on the EUT and record as appropriate.

Stabilize all factors at nominal reference conditions.

Repeat the test and record the test data as indicated above.

A.3.7 *Electromagnetic Susceptibility*

Test method: Electromagnetic fields (radiated).

Object of the test:

To verify compliance with the provisions in this manual under conditions of electromagnetic fields.

Reference to standard: See Bibliography (7)

Test procedure in brief:

The EUT is placed in an EMI chamber and tested under normal atmospheric conditions. This test is first conducted at one load in a static mode and the frequencies at which susceptibility is evident are noted. Then tests are conducted at the problem frequencies, if any, during a weighing operation consisting of:

For belt scales—while totalizing at the maximum flow rate at least the Σ_{min} (or a time sufficient to complete the test). It is then exposed to electromagnetic field strengths as specified in the ''Test severities'' section below.

For platform, hanging, and automatic hopper scales—tested with one small test load.

The field strength can be generated in various ways:

1. the strip line is used at low frequencies (below 30 MHz or in some cases 150 MHz) for small EUT's;

2. the long wire is used at low frequencies (below 30 MHz) for larger EUT's;

3. dipole antennas or antennas with circular polarization placed 1 m from the EUT are used at high frequencies.

Under exposure to electromagnetic fields the EUT is again tested as indicated above.

Test severities: Frequency range: 26—1000 MHz

Field strength: 3 V/m

Modulation: 80 percent AM, 1 kHz sine wave

Number of test cycles: Conduct test by continuously scanning the specified frequency range while maintaining the field strength.

Maximum allowable variations: The difference between the indication due to the disturbance and the indication without the disturbance either must not exceed the values given in this manual, or the EUT must detect and act upon a significant fault.

Conduct of the test: Refer to the IEC Publication referenced in Bibliography (7) for detailed information on test procedures.

Supplementary information to the IEC test procedures.

Test conditions:

The specified field strength must be established prior to the actual testing (without the EUT in the field). At least 1 m of all external cables must be included in the exposure by stretching them horizontally from the EUT.

The field strength must be generated in two orthogonal polarizations and the frequency range scanned slowly. If antennas with circular polarization, i.e., log-spiral or helical antennas, are used to generate the electromagnetic field, a change in the position of the antennas is not required. When the test is carried out in a shielded enclosure to comply with international laws prohibiting interference to radio communications, care needs to be taken to handle reflections from the walls. Anechoic shielding might be necessary.

Condition of EUT: Normal power supplied and ''on'' for a time period equal to or greater than the warm-up time specified by the manufacturer. Power is to be ''on'' for the duration of the test. The EUT must be operating under standard atmospheric conditions for testing.

Adjust the EUT as close to a zero indication as practicable prior to the test.

Test sequence: Stabilize all factors at nominal reference conditions.

Conduct the test as indicated above and record the following data:

date and time,
temperature,
relative humidity,
test load,
indication,
errors,
functions performance.

Following the IEC test procedures, expose the EUT at zero load to the specified field strengths while slowly scanning the three indicated frequency ranges.

Observe and record the effect on the EUT.

Repeat the test as indicated above and observe and record the effect.

Stabilize all factors at nominal reference conditions.

Repeat the test and record the test data as indicated above.

Bibliography

Below are references to Publications of the International Electrotechnical Commission (IEC), where mention is made in the tests in Annex A.

1. IEC Publication 68–2–1 (1974): Basic environmental testing procedures. Part 2: Tests, Test Ad: Cold, for heat dissipating equipment under test (EUT), with gradual change of temperature.

IEC Publication 68–2–2 (1974): Basic environmental testing procedures, Part 2: Tests, Test Bd: Dry heat, for heat dissipating equipment under test (EUT) with gradual change of temperature.

IEC Publication 68–3–1 (1974): Background information, Section 1: Cold and dry heat tests.

2. IEC Publication 68–2–56 (1988): Environmental testing, Part 2: Tests, Test Cb: Damp heat, steady state. Primarily for equipment.

IEC Publication 68–2–28 (1980): Guidance for damp heat tests.

3. IEC Publication 1000–4–11 (1994): Electromagnetic compatibility (EMC) Part 4: Testing and measurement techniques, Section 11. Voltage dips, short interruptions and voltage variations immunity tests. Section 5.2 (Test levels—Voltage variation). Section 8.2.2 (Execution of the test-voltage variation).

4. IEC Publication 1000–4–11 (1994): Electromagnetic compatibility (EMC) Part 4: Testing and measurement techniques, Section 11. Voltage dips, short interruptions and voltage variations immunity tests. Section 5.1 (Test levels—Voltage dips and short interruptions. Section 8.2.1 (Execution of the test-voltage dips and short interruptions) of the maximum transit speed and the range of operating speeds.

5. IEC Publication 1000–4–4 (1995): Electromagnetic compatibility (EMC) Part 4: Testing and measurement techniques—Section 4: Electrical fast transient/burst immunity test. Basic EMC publication.

6. IEC Publication 1000–4–2 (1995): Electromagnetic compatibility (EMC) Part 4: Testing and measurement techniques—Section 2: Electrostatic discharge immunity test. Basic EMC Publication.

7. IEC Publication 1000–4–3 (1995): Electromagnetic compatibility (EMC) Part 4: Testing and measurement techniques—Section 3: Radiated, radio-frequency electromagnetic field immunity test.

[FR Doc. 97–15659 Filed 6–13–97; 8:45 am]

BILLING CODE 3510–22–P

DEPARTMENT OF COMMERCE

National Oceanic and Atmospheric Administration

50 CFR Part 679

[I.D. 060997A]

RIN 0648–AH65

Fisheries of the Exclusive Economic Zone Off Alaska; License Limitation Program (LLP); Community Development Quota (CDQ) Program

AGENCY: National Marine Fisheries Service (NMFS), National Oceanic and Atmospheric Administration (NOAA), Commerce.

ACTION: Notice of availability of amendments to fishery management plans; request for comments.

SUMMARY: The North Pacific Fishery Management Council (Council) has submitted Amendment 39 to the Fishery Management Plan for the Groundfish Fishery of the Bering Sea and Aleutian Islands (BSAI) Area, Amendment 41 to the Fishery Management Plan for Groundfish of the Gulf of Alaska (GOA), and Amendment 5 to the Fishery Management Plan for the Commercial King and Tanner Crab Fisheries in the BSAI. If approved by NMFS, these amendments would establish two Council-recommended regulatory programs affecting groundfish fisheries in the BSAI and GOA and crab fisheries in the BSAI. Comments are requested from the public. Copies of the amendments may be obtained from the Council (see **ADDRESSES**).

DATES: Comments on the amendments must be received by August 15, 1997.

ADDRESSES: Comments on the proposed amendments must be submitted to Ronald J. Berg, Chief, Fisheries Management Division, Alaska Region, NMFS, 709 W. 9th Street, Room 405, Juneau, AK 99801, or P.O. Box 21668, Juneau, AK 99802, Attention: Lori J. Gravel. Copies of the proposed amendments and the Environmental Assessment/Regulatory Impact Review (EA/RIR) prepared for the amendments may be obtained from the North Pacific Fishery Management Council, 605 West 4th Avenue, Suite 306, Anchorage, AK 99510–2252.

FOR FURTHER INFORMATION CONTACT: John Lepore, with respect to the LLP, or David C. Ham, with respect to the CDQ Program, at 907–586–7228.

SUPPLEMENTARY INFORMATION: The Magnuson-Stevens Fishery Conservation and Management Act (Magnuson-Stevens Act) requires that each Regional Fishery Management Council submit any fishery management plan (FMP) or FMP amendment that it prepares to NMFS for review and approval, disapproval, or partial approval. The Magnuson-Stevens Act also requires that NMFS, upon reviewing an FMP or amendment, must immediately publish a notice that the FMP or amendment is available for public review and comment. NMFS will consider the public comments received during the comment period in determining whether to approve the plan or amendment.

The three proposed FMP amendments would establish two fishery management programs that would provide exclusive fishing privileges to persons or groups of persons who meet specified qualifications. Under one system, the LLP, a limited number of licenses would be granted to persons who owned vessels that harvested and landed fish in the FMP fisheries during specified qualifying periods. The program would be implemented through the issuance of Federal vessel licenses. Except for certain exemptions, using a vessel in one of the FMP fisheries without a valid license would be prohibited. Qualification for a BSAI or GOA groundfish license would require a vessel to have made a legal landing of groundfish during a general qualification period and an area endorsement qualification period. Licensed vessels would be limited to fishing only in the areas for which they have endorsements. Qualification for a BSAI crab fishing license similarly would require a specified number of landings during general and endorsement qualification periods. Crab fishing license endorsements would limit a vessel to fishing only for the species and in the area specified on the endorsement. Licenses would be initially issued to persons who owned qualified vessels on June 17, 1995. The transfer of licenses would be allowed within certain limitations. Potentially affected persons are requested to review all proposed licensing provisions and exceptions in the FMP amendments and proposed implementing regulations, which will soon be published in the **Federal Register**.

The proposed LLP is designed to halt the increase in the number of participating fishing vessels and to limit their fishing capacity. This program evolved from a longstanding Council concern that excess harvesting capacity in the fisheries governed by the FMPs increases the risk of management failure and inability to achieve optimum yield (OY) in these fisheries. The problem statement that guided the Council's analysis of management alternatives indicated that the domestic harvesting fleet had expanded beyond the size necessary to efficiently harvest the OY of the FMP fisheries. The problem statement also confirmed the Council's commitment to the long-term health and productivity of the fisheries and other living marine resources in North Pacific and Bering Sea ecosystems. Establishment of the LLP form of limited access system is authorized under section 303(b)(6) of the Magnuson-Stevens Act.

The other proposed regulatory program would extend the existing CDQ programs for pollock, halibut, and sablefish, at 50 CFR 679 subpart C, to all other groundfish fisheries in the BSAI groundfish FMP and to the crab fisheries in the crab FMP. The proposed multi-species CDQ program is modeled on the existing pollock CDQ program, established originally in 1992, in that a specified percentage of the annually specified total allowable catch would be reserved for the exclusive use of persons fishing for qualified communities under approved community development plans. Unlike the pollock CDQ program, the multi-species CDQ program would not be scheduled to cease, but would continue until modified or revoked by a future regulatory action. The existing CDQ programs for halibut and sablefish would be merged into the multi-species CDQ program, but integration of the pollock CDQ program would depend on Council action to propose its re-authorization after 1998.

The overall goal of the CDQ programs (existing and proposed) is to provide the means for starting or supporting commercial seafood activities in western Alaska that will result in ongoing, regionally-based commercial seafood or related businesses. The multi-species CDQ proposal is specifically authorized under section 305 of the Magnuson-Stevens Act.

NMFS will consider the public comments received during the comment period in determining whether to approve the proposed amendments. The proposed regulations are scheduled to be published within 15 days of this notice.

Dated: June 11, 1997.

Gary Matlock,

Director, Office of Sustainable Fisheries, National Marine Fisherie Service.

[FR Doc. 97–15736 Filed 6–13–97; 8:45 am]

BILLING CODE 3510–22–F

Notices

Federal Register
Vol. 62, No. 115
Monday, June 16, 1997

This section of the FEDERAL REGISTER contains documents other than rules or proposed rules that are applicable to the public. Notices of hearings and investigations, committee meetings, agency decisions and rulings, delegations of authority, filing of petitions and applications and agency statements of organization and functions are examples of documents appearing in this section.

DEPARTMENT OF AGRICULTURE

Forest Service

Williamette Provincial Interagency Executive Committee (PIEC), Advisory Committee

AGENCY: Forest Service, USDA.

ACTION: Notice of meeting.

SUMMARY: The Williamette PIEC Advisory Committee will meet on Thursday, June 19, 1997 at Cascade Hall at the Oregon State Fairgrounds, 2330 NE 17th Street, Salem, Oregon. This is a change from the previously announced location of this meeting.

The time of the meeting and agenda remains unchanged from the original notice and is as follows The meeting is scheduled to begin at 9:00 a.m., and will conclude at approximately 4:00 p.m. The tentative agenda includes: (1) Report from the Little Sandy Watershed Subcommittee, (2) Public Forum, (3) Advisory Committee discussion on Little Sandy, and (4) Status of Province implementation monitoring for 1997. The public forum is tentatively scheduled to begin at 10:30 a.m. Time allotted for individual presentations will be limited to 3–4 minutes. Written comments are encouraged, particularly if the material cannot be presented within the time limits for the Public Forum.

FOR FURTHER INFORMATION CONTACT:

For more information regarding this meeting, contact Designated Federal Official Neal Forrester; Williamette National Forest, 211 East Seventh Avenue; Eugene, Oregon 97401; (541) 465–6924.

Dated: June 10, 1997.

Richard Sawaya,

Acting Forest Supervisor.

[FR Doc. 97–15679 Filed 6–13–97; 8:45 am]

BILLING CODE 3410–11–M

DEPARTMENT OF COMMERCE

Submission for OMB Review; Comment Request

The Department of Commerce (DoC) has submitted to the Office of Management and Budget (OMB) for clearance the following proposal for collection of information under provisions of the Paperwork Reduction Act (44 U.S.C. Chapter 35).

Agency: Economic Development Administration (EDA).

Title: Area Designations and Overall Economic Development Program Guidelines.

Agency Form Number: Not Applicable.

OMB Approval Number: 0610–0093.

Type of Request: Extension of a currently approved collection.

Burden: 176,100 hours.

Average Hours Per Response: Varies depending on the requirement but ranges between 120 and 240 hours.

Number of Respondents: Approximately 865 respondents and recordkeepers.

Needs and Uses: This information collection is needed to ascertain if an area has a planning process in place and has thoroughly thought out what type of economic development needs to take place in the area to alleviate unemployment, underemployment, and to increase incomes. The information requested is used by EDA program officials to determine eligibility for the following: area designations, approval of boundary changes for designated areas, and approval of Overall Economic Development Programs. The information is required under the Public Works and Economic Development Act of 1965 (P.L. 89–136), as amended.

Affected Public: State, local or tribal governments and not-for-profit organizations.

Frequency: On occasion, annually, every five years.

Respondent's Obligation: Required to obtain or retain benefits.

OMB Desk Officer: Victoria Baecher-Wassmer, (202) 395–7340.

Copies of the above information collection proposal can be obtained by calling or writing Linda Engelmeier, DoC Forms Clearance Officer, (202) 482–3272, U.S. Department of Commerce, Room 5327, 14th and Constitution Avenue, N.W., Washington, D.C. 20230.

Written comments and recommendations for the proposed information collection should be sent within 30 days of publication of this notice to Victoria Baecher-Wassmer, OMB Desk Officer, Room 10202, New Executive Office Building, Washington, D.C. 20503.

Dated: June 9, 1997.

Linda Engelmeier,

Departmental Forms Clearance Officer, Office of Management and Organization.

[FR Doc. 97–15650 Filed 6–13–97; 8:45 am]

BILLING CODE 3510–34–P

DEPARTMENT OF COMMERCE

Submission for OMB Review; Comment Request

The Department of Commerce (DOC) has submitted to the Office of Management and Budget (OMB) for clearance the following proposal for collection of information under provisions of the Paperwork Reduction Act (44 U.S.C. Chapter 35).

Agency: National Oceanic and Atmospheric Administration (NOAA).

Title: Northeast Region Federal Fishery Permits Family of Forms.

Agency Form Number: N/A.

OMB Approval Number: 0648–0202.

Type of Request: Revision of a currently approved collection.

Burden: 40,996 hours—the new requirement is 37 hours of this total.

Avg. Hours Per Response: 2 minutes per call for the new requirement.

Number of Respondents: 119,159 respondents for the total collection—the new requirement consists of 567 respondents.

Needs and Uses: The National Marine Fisheries Service will issue a final rule to implement measures contained in Framework Adjustment 9 to the Atlantic Sea Scallop Fishery Management Plan. The intent of these regulations is to exempt general sea scallop permit holders fishing exclusively under the State Waters Exemption Program (SWEP) from the 400 lb. trip limit. This exemption would require general sea scallop vessels to notify NMFS through the call-in system before and after fishing under SWEP. Limited access scallop permit holders are already required to use either the VTS or call-in system in order to qualify for the state waters exemption.

Affected Public: Individuals, businesses or other for-profit organizations; federal government; state, local or tribal government.

Frequency: On occasion.

Respondent's Obligation: Mandatory.

OMB Desk Officer: Brett Hauber, (202) 395–6466.

Copies of the above information collection proposal can be obtained by calling or writing Linda Engelmeier, DOC Forms Clearance Officer, (202) 482–3272, Department of Commerce, Room 5327, 14th and Constitution Avenue, N.W., Washington, D.C. 20230.

Written comments and recommendations for the proposed information collection should be sent within 30 days of publication of this notice to Brett Hauber, OMB Desk Officer, Room 10202, New Executive Office Building, Washington, D.C. 20230.

Dated: June 9, 1997.

Linda Engelmeier,

Departmental Forms Clearance Officer, Office of Management and Organization.

[FR Doc. 97–15651 Filed 6–13–97; 8:45 am]

BILLING CODE: 350–22–P

DEPARTMENT OF COMMERCE

Bureau of Export Administration

Short Supply Regulations, Unprocessed Western Red Cedar

ACTION: Proposed collection; comment request.

SUMMARY: The Department of Commerce, as part of its continuing effort to reduce paperwork and respondent burden, invites the general public and other Federal agencies to take this opportunity to comment on proposed and/or continuing information collections, as required by the Paperwork Reduction Act of 1995, Public Law 104–13 (44 U.S.C. 3506(c)(2)(A)).

DATES: Written comments must be submitted on or before August 15, 1997.

ADDRESSES: Direct all written comments to Linda Engelmeier, Departmental Clearance Officer, Department of Commerce, Room 5327, 14th and Constitution Avenue, NW, Washington DC 20230.

FOR FURTHER INFORMATION CONTACT: Requests for additional information or copies of the information collection instrument(s) and instructions should be directed to Stephen Baker, Department of Commerce, 14th and Constitution Avenue, NW, Room 6877, Washington, DC 20230.

SUPPLEMENTAL INFORMATION:

I. Abstract

The information is collected as supporting documentation for license applications to export western red cedar logs to enforce the Export Administration Act's prohibition against the export of such logs from state or Federal lands.

II. Data

OMB Number: 0694–0025.

Form Number: BXA–748P.

Type of Review: Regular submission for extension of a currently approved collection.

Affected Public: Individuals, businesses or other for-profit institutions.

Estimated Number of Respondents: 1.

Estimated Time Per Response: 1 hour per response.

Estimated Total Annual Burden Hours: 11.

Estimated Total Annual Cost: $272 (no equipment or other materials will need to be purchased to comply with the requirement).

III. Request for Comments

Comments are invited on: (a) Whether the proposed collection of information is necessary for the proper performance of the functions of the agency, including whether the information shall have practical utility; (b) the accuracy of the agency's estimate of the burden (including hours and cost) of the proposed collection of information; (c) ways to enhance the quality, utility, and clarity of the information to be collected; and (d) ways to minimize the burden of the collection of information on respondents, including through the use of automated collection techniques or other forms of information technology.

Comments submitted in response to this notice will be summarized and/or included in the request for OMB approval of this information collection; they will also become a matter of public record.

Dated: June 10,1997.

Linda Engelmeier,

Departmental Forms Clearance Officer, Office of Management and Organization.

[FR Doc. 97–15647 Filed 6–13–97; 8:45 am]

BILLING CODE 3510–DEBT–P

DEPARTMENT OF COMMERCE

Foreign-Trade Zones Board

[Docket 46–97]

Foreign-Trade Zone 22, Chicago, Illinois; Application for Subzone Status Henkel Corporation (Natural Vitamin E), Kankakee, Illinois

An application has been submitted to the Foreign-Trade Zones Board (the Board) by the Illinois International Port District, grantee of FTZ 22, requesting special-purpose subzone status for the natural Vitamin E manufacturing facility of Henkel Corporation (Henkel) in Kankakee, Illinois. Henkel is a wholly-owned subsidiary of Henkel of America, Inc., which is a wholly-owned subsidiary of Henkel KgaA (Germany), a global manufacturer of oleochemicals and organic specialty chemicals. The application was submitted pursuant to the provisions of the Foreign-Trade Zones Act, as amended (19 U.S.C. 81a-81u), and the regulations of the Board (15 CFR part 400). It was formally filed on June 4, 1997.

Henkel's plant (177,500 mfg. sq. ft./306 acres) is located on South Kensington Road in the city of Kankakee (Kankakee County), Illinois, some 60 miles south of Chicago. The facility (400 employees) produces thermoplastic resins, adhesives, dimer acid products, natural vitamin E, sterols, fatty acids, sulfation products and plastic additive products. The facility also serves as Henkel's Midwest Distribution Center. The application requests authority to manufacture only Vitamin E, sterols and fatty acids under zone procedures. Some of the vegetable oil distillate is sourced abroad, accounting for approximately 15 to 25 percent of the value of the natural vitamin E produced at the facility. Some 20 to 40 percent of production is exported.

Zone procedures would exempt Henkel from Customs duty payments on foreign materials used in production for export. On domestic shipments, the company would be able to choose the duty rates that apply to the finished products (duty-free to 4.1%) instead of the rates otherwise applicable to the foreign material (deodorizer distillate rates could range from duty-free to 11.5% + 2.6¢/kg., depending on Customs classification and GSP status). The application indicates that the savings from zone procedures will help improve the international competitiveness of Henkel's Kankakee plant and will help increase exports.

In accordance with the Board's regulations, a member of the FTZ Staff has been designated examiner to

investigate the application and report to the Board.

Public comment is invited from interested parties. Submissions (original and 3 copies) shall be addressed to the Board's Executive Secretary at the address below. The closing period for their receipt is August 15, 1997. Rebuttal comments in response to material submitted during the foregoing period may be submitted during the subsequent 15-day period (to September 2, 1997).

A copy of the application and accompanying exhibits will be available for public inspection at each of the following locations:

U.S. Department of Commerce Export Assistance Center, Suite 2440, 55 West Monroe St., Chicago, Illinois 60603

Office of the Executive Secretary, Foreign-Trade Zones Board, U.S. Department of Commerce, Room 3716, 14th & Pennsylvania Avenue, NW., Washington, DC 20230.

Dated: June 5, 1997.

John J. Da Ponte, Jr.,

Executive Secretary.

[FR Doc. 97–15749 Filed 6–13–97; 8:45 am]

BILLING CODE 3510–DS–P

DEPARTMENT OF COMMERCE

Foreign-Trade Zones Board

[Order No. 895]

Grant of Authority for Subzone Status; Murphy Oil USA, Inc. (Oil Refinery) St. Bernard Parish, LA

Pursuant to its authority under the Foreign-Trade Zones Act of June 18, 1934, as amended (19 U.S.C. 81a–81u), the Foreign-Trade Zones Board (the Board) adopts the following Order:

Whereas, by an Act of Congress approved June 18, 1934, an Act ''To provide for the establishment * * * of foreign-trade zones in ports of entry of the United States, to expedite and encourage foreign commerce, and for other purposes,'' as amended (19 U.S.C. 81a-81u) (the Act), the Foreign-Trade Zones Board (the Board) is authorized to grant to qualified corporations the privilege of establishing foreign-trade zones in or adjacent to U.S. Customs ports of entry;

Whereas, the Board's regulations (15 CFR Part 400) provide for the establishment of special-purpose subzones when existing zone facilities cannot serve the specific use involved;

Whereas, an application from the Board of Commissioners of the Port of New Orleans, grantee of Foreign-Trade Zone 2, for authority to establish special-purpose subzone status at the oil refinery complex of Murphy Oil USA, Inc., located in St. Bernard Parish, Louisiana, was filed by the Board on July 1, 1996, and notice inviting public comment was given in the **Federal Register** (FTZ Docket 55–96, 61 FR 36550, 7–11–96); and,

Whereas, the Board adopts the findings and recommendations of the examiner's report, and finds that the requirements of the FTZ Act and Board's regulations would be satisfied, and that approval of the application would be in the public interest if approval is subject to the conditions listed below;

Now, Therefore, the Board hereby authorizes the establishment of a subzone (Subzone 2J) at the oil refinery complex of Murphy Oil USA, Inc., located in St. Bernard Parish, Louisiana, at the location described in the application, subject to the FTZ Act and the Board's regulations, including § 400.28, and subject to the following conditions:

1. Foreign status (19 CFR 146.41, 146.42) products consumed as fuel for the refinery shall be subject to the applicable duty rate.

2. Privileged foreign status (19 CFR § 146.41) shall be elected on all foreign merchandise admitted to the subzone, except that non-privileged foreign (NPF) status (19 CFR 146.42) may be elected on refinery inputs covered under HTSUS Subheadings # 2709.00.1000—# 2710.00.1050, # 2710.00.2500 and # 2710.00.4510 which are used in the production of:

—Petrochemical feedstocks and refinery by-products (examiners report, Appendix C);

—Products for export; and,

—Products eligible for entry under HTSUS # 9808.00.30 and 9808.00.40 (U.S. Government purchases).

3. The authority with regard to the NPF option is initially granted until September 30, 2000, subject to extension.

Signed at Washington, DC, this 2nd day of June 1997.

Robert S. LaRussa,

Acting Assistant Secretary of Commerce for Import Administration, Alternate Chairman, Foreign-Trade Zones Board.

[FR Doc. 97–15752 Filed 6–13–97; 8:45 am]

BILLING CODE 3510–DS–P

DEPARTMENT OF COMMERCE

Foreign-Trade Zones Board

[Docket 44–97]

Foreign-Trade Zone 15; Kansas City, Missouri Area; Application for Expansion

An application has been submitted to the Foreign-Trade Zones Board (the Board) by the Greater Kansas City Foreign Trade Zone, Inc., grantee of Foreign-Trade Zone 15, requesting authority to expand its zone in the Kansas City, Missouri area, adjacent to the St. Louis, Missouri, Customs port of entry. The application was submitted pursuant to the provisions of the Foreign-Trade Zones Act, as amended (19 U.S.C. 81a–81u), and the regulations of the Board (15 CFR Part 400). It was formally filed on May 29, 1997.

FTZ 15 was approved on March 23, 1973 (Board Order 93, 38 FR 8622, 4/4/73) and expanded on October 25, 1974 (Board Order 102, 39 FR 39487, 11/7/74); February 28, 1996 (Board Order 804, 61 FR 9676, 3/11/96); and, May 31, 1996 (Board Order 824, 61 FR 29529, 6/11/96). The zone project includes 4 general-purpose sites in the Kansas City, Missouri, port of entry area: *Site 1* (250,000 sq. ft.)—Midland International Corp. warehouse, 1690 North Topping, Kansas City; *Site 2* (2,815,000 sq. ft.)—surface/underground warehouse complex, 8300 N.E. Underground Drive, Kansas City; *Site 3* (10,000 acres)—Kansas City International Airport complex, Kansas City; and, *Site 4* (416 acres)—surface/underground business park (Carefree Industrial Park), 1600 N. M–291 Highway, Sugar Creek. An application is currently pending with the Board for an additional site in Carthage, Missouri (Docket 7–97).

The applicant is now requesting authority to further expand the general-purpose zone to include an additional site: (proposed *Site 6* (28,000 sq. ft., 11 acres)—Laser Light Technologies, Inc. facility, located within the Hermann Industrial Park, 5 Danuser Drive, Hermann. The facility is to provide laser engraving, marking and bar coding services, as well as warehousing, storage and product distribution services. No specific manufacturing requests are being made at this time. Such requests would be made to the Board on a case-by-case basis.

In accordance with the Board's regulations, a member of the FTZ Staff has been designated examiner to investigate the application and report to the Board.

Public comment on the application is invited from interested parties.

Submissions (original and 3 copies) shall be addressed to the Board's Executive Secretary at the address below. The closing period for their receipt is August 15, 1997. Rebuttal comments in response to material submitted during the foregoing period may be submitted during the subsequent 15-day period (to September 2, 1997).

A copy of the application and accompanying exhibits will be available for public inspection at each of the following locations:

Office of the City of Hermann, Administrator, 207 Schiller Street, Hermann, MO 65041

Office of the Executive Secretary, Foreign-Trade Zones Board, Room 3716, U.S. Department of Commerce, 14th & Pennsylvania Avenue, NW, Washington, DC 20230.

Dated: June 3, 1997.

John J. Da Ponte, Jr.,

Executive Secretary.

[FR Doc. 97–15748 Filed 6–13–97; 8:45 am]

BILLING CODE 6540–DS–P

DEPARTMENT OF COMMERCE

Foreign-Trade Zones Board

[Order No. 894]

Grant of Authority for Subzone Status; Coastal Eagle Point Oil Company (Oil Refinery), Gloucester County, New Jersey

Pursuant to its authority under the Foreign-Trade Zones Act of June 18, 1934, as amended (19 U.S.C. 81a-81u), the Foreign-Trade Zones Board (the Board) adopts the following Order:

Whereas, by an Act of Congress approved June 18, 1934, an Act ''To provide for the establishment . . . of foreign-trade zones in ports of entry of the United States, to expedite and encourage foreign commerce, and for other purposes,'' as amended (19 U.S.C. 81a-81u) (the Act), the Foreign-Trade Zones Board (the Board) is authorized to grant to qualified corporations the privilege of establishing foreign-trade zones in or adjacent to U.S. Customs ports of entry;

Whereas, the Board's regulations (15 CFR Part 400) provide for the establishment of special-purpose subzones when existing zone facilities cannot serve the specific use involved;

Whereas, an application from the South Jersey Port Corporation, grantee of Foreign-Trade Zone 142, for authority to establish special-purpose subzone status at the oil refinery complex of Coastal Eagle Point Oil Company, located in Gloucester County, New Jersey, was filed by the Board on June 25, 1996, and notice inviting public comment was given in the **Federal Register** (FTZ Docket 54–96, 61 FR 35710, 7–8–96); and,

Whereas, the Board adopts the findings and recommendations of the examiner's report, and finds that the requirements of the FTZ Act and Board's regulations would be satisfied, and that approval of the application would be in the public interest if approval is subject to the conditions listed below;

Now, Therefore, the Board hereby authorizes the establishment of a subzone (Subzone 142C) at the oil refinery complex of Coastal Eagle Point Oil Company, located in Gloucester County, New Jersey, at the location described in the application, subject to the FTZ Act and the Board's regulations, including § 400.28, and subject to the following conditions:

1. Foreign status (19 CFR 146.41, 146.42) products consumed as fuel for the refinery shall be subject to the applicable duty rate.

2. Privileged foreign status (19 CFR § 146.41) shall be elected on all foreign merchandise admitted to the subzone, except that non-privileged foreign (NPF) status (19 CFR § 146.42) may be elected on refinery inputs covered under HTSUS Subheadings # 2709.00.1000—# 2710.00.1050, # 2710.00.2500 and # 2710.00.4510 which are used in the production of:

—petrochemical feedstocks and refinery by-products (examiners report, Appendix C);

—products for export; and,

—products eligible for entry under HTSUS # 9808.00.30 and 9808.00.40 (U.S. Government purchases).

3. The authority with regard to the NPF option is initially granted until September 30, 2000, subject to extension.

Signed at Washington, DC, this 2nd day of June 1997.

Robert S. LaRussa,

Acting Assistant Secretary of Commerce for Import Administration, Alternate Chairman, Foreign-Trade Zones Board.

Attest:

John J. Da Ponte, Jr.,

Executive Secretary

[FR Doc. 97–15751 Filed 6–13–97; 8:45 am]

BILLING CODE 3510–DS–P

DEPARTMENT OF COMMERCE

Foreign-Trade Zones Board

[Docket 45–97]

Foreign-Trade Zone 55; Burlington, Vermont Application for Subzone, Vermont Electromagnetics Corporation (Manufacturer of Cable Systems/ Assemblies) Williston, Vermont

An application has been submitted to the Foreign-Trade Zones Board (the Board) by the Greater Burlington Industrial Corporation (GBIC), grantee of FTZ 55, requesting special-purpose subzone status for export activity at the cable manufacturing/assembly facility of Vermont Electromagnetics Corporation (VEMCO), located in Williston, Vermont. The application was submitted pursuant to the provisions of the Foreign-Trade Zones Act, as amended (19 U.S.C. 81a–81u), and the regulations of the Board (15 CFR part 400). It was formally filed on June 3, 1997.

The facility (15,200 sq. ft. on 4.4 acres; 140 employees) is located at Whitcomb Industrial Park, 7 Avenue D, in Williston, some 10 miles east of Burlington. It is used to design and manufacture miniature coaxial cable systems, CCD camera and high-speed video cable assemblies, and miniature high performance coaxial jumper cable assemblies for the medical and dental industries. Some of the materials used in the production process are sourced abroad including cables and connectors. Foreign materials account for some 50–99 percent of the value of total materials. All of the products processed under zone procedures would be exported.

Zone procedures would exempt VEMCO from Customs duty payments on foreign materials used in production for export. The application indicates that the savings from zone procedures will help improve the international competitiveness of the VEMCO plant and will help increase exports.

In accordance with the Board's regulations, a member of the FTZ staff has been appointed examiner to investigate the application and report to the Board.

Public comment is invited from interested parties. Submissions (original and 3 copies) shall be addressed to the Board's Executive Secretary at the address below. The closing period for their receipt is August 15, 1997. Rebuttal comments in response to material submitted during the foregoing period may be submitted during the subsequent 15-day period (to September 2, 1997).

A copy of the application and accompanying exhibits will be available for public inspection at each of the following locations:

U.S. Department of Commerce Export Assistance Center, 109 State Street, 4th Floor, Montpelier, Vermont 05609

Office of the Executive Secretary, Foreign-Trade Zones Board, Room 3716, U.S. Department of Commerce 14th & Pennsylvania Avenue, N.W., Washington, D.C. 20230.

Dated: June 5, 1997.

John J. Da Ponte, Jr.,

Executive Secretary.

[FR Doc. 97–15750 Filed 6–13–97; 8:45 am]

BILLING CODE 3510–DS–P

DEPARTMENT OF COMMERCE

International Trade Administration

[A–588–840]

Notice of Antidumping Duty Order and Amended Final Determination of Sales at Less Than Fair Value: Engineered Process Gas Turbo-Compressor Systems, Whether Assembled or Unassembled, and Whether Complete or Incomplete, From Japan

AGENCY: Import Administration, International Trade Administration, Department of Commerce.

EFFECTIVE DATE: June 16, 1997.

FOR FURTHER INFORMATION CONTACT: David Genovese, Office of Antidumping/Countervailing Duty Enforcement, Import Administration, International Trade Administration, U.S. Department of Commerce, 14th Street and Constitution Avenue, N.W., Washington, D.C. 20230; telephone (202) 482–4697.

The Applicable Statute

Unless otherwise indicated, all citations to the statute are references to the provisions effective January 1, 1995, the effective date of the amendments made to the Tariff Act of 1930 (the Act) by the Uruguay Round Agreements Act (URAA). In addition, unless otherwise indicated, all citations to the Department's regulations are to the current regulations, as amended by the interim regulations published in the **Federal Register** on May 11, 1995 (60 FR 25130).

Amended Final Determination

In accordance with section 735(a) of the Act, on April 24, 1997, the Department made its final determination that engineered process gas turbo-compressor systems (EPGTS), whether assembled or unassembled, and whether complete or incomplete from Japan, are being, or are likely to be, sold in the United States at less than fair value (62 FR 24394, May 5, 1997). Subsequent to the final determination, on May 5, 1997, we received a submission, timely filed pursuant to 19 CFR 353.28(b), from the respondent, Mitsubishi Heavy Industries Ltd. (MHI), alleging ministerial errors in the Department's final determination. No ministerial error allegations were submitted by the petitioner. We received comments from the petitioner rebutting MHI's allegations on May 9, 1997.

We have determined, in accordance with 19 CFR 353.28(d), that ministerial errors were made in our margin calculations for MHI. Specifically, the Department made three ministerial errors in its final determination with respect to the following issues: 1) the indirect selling expenses incurred by Mitsubishi Corporation (MC); 2) the U.S. imputed credit expense; and 3) the calculation of the constructed value (CV) profit rate. For a detailed discussion of the above-cited ministerial errors and the Department's analysis, see Memorandum for Jeffrey Bialos from Irene Darzenta, *et al.*, dated May 26, 1997. In accordance with 19 CFR 353.28(c), we are amending the final determination of the antidumping duty investigation of EPGTS from Japan to correct these ministerial errors. The revised final weighted-average dumping margins are as follows:

Company	Weighted average margin percentage
Mitsubishi Heavy Industries, Ltd.	38.32
All-Others	38.32

Scope of Order

The products covered by this investigation are turbo-compressor systems (*i.e.*, one or more ''assemblies'' or ''trains'') which are comprised of various configurations of process gas compressors, drivers (*i.e.*, steam turbines or motor-gear systems designed to drive such compressors), and auxiliary control systems and lubrication systems for use with such compressors and compressor drivers, whether assembled or unassembled, and whether complete or incomplete. One or more of these turbo-compressor assemblies or trains, may be combined. The systems covered are only those used in the petrochemical and fertilizer industries, in the production of ethylene, propylene, ammonia, urea, methanol, refinery and other petrochemical products. This order does not encompass turbo-compressor systems incorporating gas turbine drivers, which are typically used in pipeline transmission, injection, gas processing, and liquid natural gas service.

The scope of this order excludes spare parts that are sold separately from a contract for an EPGTS. Parts or components imported for the revamp or repair of an existing EPGTS, or otherwise not included in the original contract of sale for the EPGTS of which they are intended to be a part, are expressly excluded from the scope.

Compressors are machines used to increase the pressure of a gas or vapor, or mixture of gases and vapors. Compressors are commonly classified as reciprocating, rotary, jet, centrifugal, or axial (classified by the mechanical means of compressing the fluid), or as positive-displacement or dynamic-type (classified by the manner in which the mechanical elements act on the fluid to be compressed). Subject compressors include only centrifugal compressors engineered for process gas compression, *e.g.*, ammonia, urea, methanol, propylene, or ethylene service.

Turbines are classified (1) as steam or gas; (2) by mechanical arrangement as single-casing, multiple shaft, or tandem-compound (more than one casing with a single shaft); (3) by flow direction (axial or radial); (4) by steam cycle, whether condensing, non-condensing, automatic extraction, or reheat; and (5) by number of exhaust flows of a condensing unit. Steam and gas turbines are used in various applications. Only steam turbines dedicated for a turbo-compressor system are subject to this order.

A motor and gear box may be used as a compressor driver in lieu of a steam turbine. A control system is used to monitor and control the operation of a turbo-compressor system. A lubrication system is engineered to support a subject compressor and steam turbine (or motor/gear box).

A typical EPGTS consists of one or more compressors driven by a turbine (or in some cases a motor drive). A compressor is usually installed on a base plate and the drive is installed on a separate base plate. The turbine (or motor drive) base plate will typically also include any governing or safety systems, couplings, and a gearbox, if any. The lube and oil seal systems for the turbine and compressor(s) are usually mounted on a separate base plate.

The scope of this order covers both assembled and unassembled EPGTS from Japan. Because of their large size, EPGTS and their constituent parts are typically shipped partially assembled (or unassembled) to their destination where they are assembled and/or completed prior to their commissioning.

The scope of this order also covers ''complete and incomplete'' EPGTS from Japan. A ''complete'' EPGTS covered by the scope consists of all of the components of an EPGTS (*i.e.*, process gas compressor(s), driver(s), auxiliary control system(s) and lubrication system(s)) and their constituent parts, which are imported from Japan in assembled or unassembled form, individually or in combination, pursuant to a contract for a complete EPGTS in the United States. An ''incomplete'' EPGTS covered by the scope of this order consists of parts of an EPGTS imported from Japan pursuant to a contract for a complete EPGTS in the United States, which taken altogether, constitute at least 50 percent of the cost of manufacture of the complete EPGTS of which they are a part. (*See Comment* 1 of the ''Interested Party Comments'' section of the final determination notice (62 FR 24394, May 5, 1997) for a discussion on the definition of ''incomplete EPGTS'' covered by the scope of this order and the methodology the Department will use to calculate the cost of manufacture.)

EPGTS imported from Japan as an assembly or train (*i.e.*, including turbines, compressors, motor and gear boxes, control systems and lubrication systems, and auxiliary equipment) may be classified under Harmonized Tariff Schedule of the United States (''HTSUS'') subheading 8414.80.2015, which provides for centrifugal and axial compressors. The Customs Service may view the combination of turbine driver and compressor as ''more than'' a compressor and, as a result, classify the combination under HTSUS subheading 8419.60.5000.

Compressors for use in EPGTS, if imported separately, may also be classified under HTSUS subheading 8414.80.2015. Parts for such compressors, including rotors or impellers and housing, are classified under HTSUS subheading 8414.90.4045 and 8414.90.4055.

Steam turbines for use in EPGTS, if imported separately, may be classified under the following HTSUS subheadings: 8406.81.1020 (steam turbines, other than marine turbines, stationary, condensing type, of an output exceeding 40 MW); 8406.82.1010 (steam turbines, other than marine turbines, stationary, condensing type, exceeding 7,460 Kw); 8406.82.1020 (steam turbines, other than marine turbines, stationary, condensing type, exceeding 7,460 Kw, but not exceeding 40 MW); 8406.82.1050 (steam turbines, other than marine turbines, stationary, other than condensing type, not exceeding 7,460 Kw); 8406.82.1070 (steam turbines, other than marine turbines, stationary, other than condensing type, exceeding 7,460 Kw, but not exceeding 40 MW). Parts for such turbines are classified under HTSUS subheading 8406.90.2000 through 8406.90.4580.

Control and other auxiliary systems may be classified under HTSUS 9032.89.6030 (''automatic regulating or controlling instruments and apparatus: complete process control systems'').

Motor and gear box entries may be classified under HTSUS subheading 8501.53.4080, 8501.53.6000, 8501.53.8040, or 8501.53.8060. Gear speed changers used to match the speed of an electric motor to the shaft speed of a driven compressor, would be classified under HTSUS subheading 8483.40.5010.

Lubrication systems may be classified under HTSUS subheading 8414.90.4075.

Although the HTSUS subheadings are provided for convenience and customs purposes, our written description of the scope of this order is dispositive.

Antidumping Duty Order

On June 10, 1997, the International Trade Commission (ITC) notified the Department of its final determination, pursuant to section 735(b)(1)(A)(i) of the Act, that an industry in the United States is materially injured by reason of imports of the subject merchandise from Japan.

In accordance with section 736(a)(1) of the Act, the Department will direct Customs officers to assess, upon further advice by the administering authority, antidumping duties equal to the amount by which the normal value of the merchandise exceeds the constructed export price of the merchandise for all entries of EPGTS from Japan. These antidumping duties will be assessed on all unliquidated entries of EPGTS from Japan entered, or withdrawn from warehouse, for consumption on or after December 10, 1996, the date on which the Department published its preliminary determination in the **Federal Register** (61 FR 65013). On or after the date of publication of this notice in the **Federal Register**, Customs officers must require, at the same time as importers would normally deposit estimated duties on this merchandise, a cash deposit equal to the estimated weighted-average antidumping duty margins as noted below. The ''All Others'' rate applies to all exporters of EPGTS not specifically listed below.

The ad valorem weighted-average dumping margins are as follows:

Manufacturer/producer/exporter	Revised margin percentage
Mitsubishi Heavy Industries/ Mitsubishi Corporation	38.32
All Others	38.32

This notice constitutes the antidumping duty order with respect to EPGTS from Japan, pursuant to section 736(a) of the Act. Interested parties may contact the Central Records Unit, Room B–099 of the Main Commerce Building, for copies of an updated list of antidumping duty orders currently in effect.

This order is published pursuant to section 736(a) of the Act and 19 CFR 353.21.

Dated: June 10, 1997.

Robert S. LaRussa,

Acting Assistant Secretary for Import Administration.

[FR Doc. 97–15753 Filed 6–13–97; 8:45 am]

BILLING CODE 3510–DS–P

DEPARTMENT OF COMMERCE

International Trade Administration

Secretarial Business Development Mission to Canada.

AGENCY: International Trade Administration, Commerce.

ACTION: Notice.

SUMMARY: This notice serves to inform the public of a Secretarial Business Development Mission to Canada, August 3–7, 1997 (''the mission'' or ''trade mission'') and the opportunity to apply for participation in the mission; sets forth objectives, procedures, and participation criteria for the mission; and requests applications.

DATES: Applications should be submitted to Cheryl Bruner by Monday, June 30, 1997, in order to ensure sufficient time to obtain in-country appointments for applicants selected to participate in the mission. Applications received after that date will be considered only if space and scheduling constraints permit. The mission to Canada is scheduled August 3–7, 1997.

ADDRESSES: Request for and submission of applications—Applications are available from: Cheryl Bruner, Director of the Office of Business Liaison or Jennifer Johnson at 202–482–1360 or via

facsimile at 202–482–4054. Numbers listed in this notice are not toll-free. The Original of the required application materials should be sent to Cheryl Bruner as noted above. Applications sent by facsimile must be immediately followed by submission of the original application to Ms. Bruner at the following address: Office of Business Liaison, Room 5062, U.S. Department of Commerce, 14th and Constitution, N.W., Washington, D.C. 20230.

FOR FURTHER INFORMATION CONTACT: Cheryl Bruner or Jennifer Johnson at 202–482–1360. Information is also available via the International Trade Administration's (ITA) Internet home page at ''http://www.ita.doc.gov/uscs/doctm''.

SUPPLEMENTARY INFORMATION:

Trade Mission Description

Secretary of Commerce, William M. Daley, will lead a trade mission to Canada in August with a U.S. business delegation. The mission to Canada will include stops in Montreal, Ottawa, Toronto, and possibly Vancouver. The overall focus of the trip will be to promote expanded trade opportunities for U.S. technology firms afforded under the North American Free Trade Agreement (NAFTA). With stops in Montreal, Ottawa, Toronto and possibly Vancouver, the Secretary's mission will cover the largest and most dynamic markets for U.S. technology products in Canada focusing on commercial opportunities for small and medium-sized U.S. firms. Specific sectors to be highlighted include computer software, computers and peripherals, electronic components, aerospace equipment, pollution control equipment, telecommunications equipment and related services, all of which are included in Canada's key growth sectors for U.S. products over the next 12 months. The Commerce Department's U.S. and Foreign Commercial Service will provide logistical support for these activities at each stop. The itinerary for the Canada Mission will be as follows:

August 3 (Sun)—Arrive Montreal
August 4 (Mon)—Montreal
August 5 (Tues)—Leave Montreal
Arrive/Depart Ottawa
Arrive Toronto
August 6 (Wed)—Toronto
Depart Toronto
August 7 (Thurs)—Vancouver (possible business delegation participation) Mission Concludes

The goals for the mission are:

- Increase sales of U.S. products and services to Canada with focus in the areas of computers, software and peripherals; electronic components; pollution control equipment, telecommunications equipment and related services;
- Seek resolution of outstanding bilateral commercial issues where appropriate, discuss multilateral issues of mutual interest and advocate U.S. interests regarding specific government procurements;
- Highlight opportunities for U.S. technology exports to America's largest and most accessible trading partner, particularly for the U.S. Small and Medium Size Enterprises (SME);
- Introduce participating U.S. companies to Canadian federal and provincial leaders and to representatives of U.S. firms in Canada;
- Promote U.S.-Canadian cooperation in pursuing strategic alliance opportunities in third-countries leading to the expansion of U.S. exports; and
- Highlight achievements under NAFTA and this Administration's commitment to its continued implementation.

A full description of the mission is set forth in the Mission Statement, which is available from Cheryl Bruner, Director of the Office of Business Liaison, at the above address.

Trade Mission Participation Criteria

The recruitment and selection of private sector participants in the mission will be conducted according to the Statement of Policy Governing Department of Commerce Overseas Trade Missions announced by Secretary Daley on March 3, 1997 and reflected herein. Company representatives should be senior level executives appropriate to the goals of the mission with authority to execute sales and other marketing agreements. Company participation will be determined on the basis of:

- Consistency of the company's goals with the scope and desired outcome of the mission as described herein;
- Relevance of a company's business line to the plan for the mission;
- Past, present and prospective business activity in Canada;
- Diversity of company size, type, location, demographics and traditional under-representation in business.

An applicant's partisan political activities (including political contributions) are irrelevant to the selection process. An interested party must fill out an application to be considered for participation in the mission.

Endorsements/Referrals

Third parties may nominate or endorse potential applicants, but companies that are nominated or endorsed must themselves submit an application to be eligible for consideration. Referrals from political organizations will not be considered.

Costs

The fees to participate in the mission have not yet been determined, and will be based on the number of participants and participation in all three, or possibly four stops. The fees will not cover travel, lodging, or other personal expenses.

Authority: 15 U.S.C. 1512.

Dated: June 10, 1997.

Anita K. Blackman,

Acting Regional Director, Office of International Operations-Western Hemisphere, U.S. and Foreign Commercial Service.

[FR Doc. 97–15644 Filed 6–13–97; 8:45 am]

BILLING CODE 3510–FP–P

DEPARTMENT OF COMMERCE

National Oceanic and Atmospheric Administration

[I.D. 052397D]

Marine Mammals

AGENCY: National Marine Fisheries Service (NMFS), National Oceanic and Atmospheric Administration (NOAA), Commerce.

ACTION: Issuance of scientific research permit no. 848–1335.

SUMMARY: Notice is hereby given that the Southwest Fisheries Science Center, Honolulu Laboratory, NMFS, 2570 Dole Street, Honolulu, Hawaii 96822–2396, has been issued a permit to ''take'' Hawaiian monk seals (*Monachus schauinslandi*) for purposes of scientific research.

ADDRESSES: The permit and related documents are available for review upon written request or by appointment in the following offices:

Permits Division, Office of Protected Resources, NMFS,

1315 East-West Highway, Room 13130, Silver Spring, MD 20910 (301/713–2289);

Regional Administrator, Southwest Region, NMFS, 501 West Ocean Boulevard, Suite 4200, Long Beach, CA 90802–4213 (310/980–4001); and

Protected Species Program Coordinator, Pacific Area Office, Southwest Region, NMFS, 2570 Dole Street, Room 106, Honolulu, HI 96822–2396 (808/973–2987).

SUPPLEMENTARY INFORMATION: On March 6, 1997, notice was published in the **Federal Register** (62 FR 10259) that the above-named applicant had submitted a

request for a scientific research and enhancement permit to ''take'' Hawaiian monk seals (*Monachus schauinslandi*) at all locations within the Hawaiian Archipelago and at Johnston Atoll. The research will be conducted over a 5-year period and will involve population assessment, disease assessment, recovery actions, and pelagic ecology studies of Hawaiian monk seals (*Monachus schauinslandi*) at all locations within the Hawaiian Archipelago and at Johnston Atoll. Research methods include: observation and monitoring; capture; physical and chemical restraint; flipper tagging and retagging; instrumentation; bleach marking; measuring and weighing; blood and tissue sampling; swabbing; biopsy sampling (blubber); lavage; capture for the purpose of rehabilitation and release to the wild; and experimental medical treatment. The research will be conducted over a 5-year period. The requested permit has been issued under the authority of the Marine Mammal Protection Act of 1972, as amended (16 U.S.C. 1361 *et seq.*), the Regulations Governing the Taking and Importing of Marine Mammals (50 CFR Part 216), the Endangered Species Act (ESA) of 1973, as amended (16 U.S.C. 1531 *et seq.*), and the Regulations Governing the Taking, Importing, and Exporting of Endangered Fish and Wildlife (50 CFR part 222).

Issuance of this permit, as required by the ESA, was based on a finding that such permit: (1) Was applied for in good faith; (2) will not operate to the disadvantage of the endangered species which is the subject of this permit; and (3) is consistent with the purposes and policies set forth in section 2 of the ESA.

Dated: June 10, 1997.

Ann D. Terbush,

Chief, Permits and Documentation Division, Office of Protected Resources, National Marine Fisheries Service.

[FR Doc. 97–15734 Filed 6–13–97; 8:45 am]

BILLING CODE 3510–22–F

DEPARTMENT OF COMMERCE

National Oceanic and Atmospheric Administration

[I.D. 060997B]

Western Pacific Fishery Management Council; Public Meeting

AGENCY: National Marine Fisheries Service (NMFS), National Oceanic and Atmospheric Administration (NOAA), Commerce.

ACTION: Notice of public meeting.

SUMMARY: The Western Pacific Fishery Management Council (Council) will hold a meeting of its Vessel Monitoring Systems (VMS) Committee.

DATES: The meeting will be held on July 8, 1997, from 9:00 a.m. to 12:00 p.m.

ADDRESSES: The meeting will be held at the Pauahi Tower, Nortel Conference Room, 1001 Bishop Street, Suite 2650, Honolulu, HI; telephone: (808) 532–6306.

Council address: Western Pacific Fishery Management Council, 1164 Bishop St., Suite 1405, Honolulu, HI 96813.

FOR FURTHER INFORMATION CONTACT: Kitty M. Simonds, Executive Director; telephone: 808–522–8220.

SUPPLEMENTARY INFORMATION: The VMS Committee will hold a meeting to discuss and formulate recommendations for the Council to consider at it's 93rd meeting to be held August 19–21, 1997. The VMS committee plans to discuss Hawaii longline VMS Data confidentiality, VMS data for fisheries research, future direction of the VMS program, and consider other business as required.

Special Accommodations

This meeting is physically accessible to people with disabilities. Requests for sign language interpretation or other auxiliary aids should be directed to Kitty M. Simonds, 808–522–8220 (voice) or 808–522–8226 (fax), at least 5 days prior to meeting date.

Dated: June 9, 1997.

Bruce C. Morehead,

Acting Director, Office of Sustainable Fisheries, National Marine Fisheries Service.

[FR Doc. 97–15643 Filed 6–13–97; 8:45 am]

BILLING CODE 3510–22–F

DEPARTMENT OF COMMERCE

National Technical Information Service

NTIS Advisory Board Meeting

AGENCY: National Technical Information Service, Technology Administration, U.S. Department of Commerce.

ACTION: Notice of partially closed meeting.

SUMMARY: Pursuant to the Federal Advisory Committee Act, 5 U.S.C. app. 2, notice is hereby given that the National Technical Information Service Advisory Board (the ''Board'') will meet on Monday, July 28, 1997, from 9:00 a.m. to 4:00 p.m., and Tuesday, July 29, 1997, from 9:00 a.m. to 4:00 p.m. The session on Tuesday, July 29, 1997, will be closed to the Public.

The Board was established under the authority of 15 U.S.C. 3704b(c), and was Chartered on September 15, 1989. The Board is composed of five members appointed by the Secretary of Commerce who are eminent in such fields as information resources management, information technology, and library and information services. The purpose of the meeting is to review and make recommendations regarding general policies and operations of NTIS, including policies in connection with fees and charges for its services. The agenda will include a progress report on NTIS activities, an update on the progress of FedWorld, and a discussion of NTIS' long range plans. The closed session discussion is scheduled to begin at 9:00 a.m. and end at 4:00 p.m. on July 29, 1997. The session will be closed because premature disclosure of the information to be discussed would be likely to significantly frustrate implementation of NTIS' business plans.

DATES: the meeting will convene on July 28, 1997, at 9:00 a.m. and adjourn at 4:00 p.m. and convene again on July 29, 1997, at 9:00 a.m. and adjourn at 4:00 p.m.

ADDRESSES: The meeting will be held in Room 2029 Sills Building, National Technical Information Service, 5285 Port Royal Road, Springfield, Virginia 22161.

PUBLIC PARTICIPATION: The meeting will be open to public participation on July 28, 1997, and closed on July 29, 1997. Approximately thirty minutes will be set aside on July 28, 1997, for comments or questions from the public. Seats will be available for the public and for the media on a first-come, first-served basis. Any member of the public may submit written comments concerning the Board's affairs at any time. Copies of the minutes of the open session meeting will be available within thirty days of the meeting from the address given below.

FOR FURTHER INFORMATION CONTACT: Linda Lucas, NTIS Advisory Board Secretary, National Technical Information Service, 5285 Port Royal Road, Springfield, Virginia 22161 Telephone: (703) 487-4636; FAX (703) 487-4093.

Dated: June 10, 1997.

Donald R. Johnson,

Director.

[FR Doc. 97–15689 Filed 6–13–97; 8:45 am]

BILLING CODE 3510–04–M

COMMODITY FUTURES TRADING COMMISSION

Sunshine Act Meeting

AGENCY HOLDING THE MEETING: Commodity Futures Trading Commission.

TIME AND DATE: 10:00 a.m., Tuesday, June 24, 1997.

PLACE: 1155 21st St., NW., Washington, DC, 9th Floor Conference Room.

STATUS: Closed.

MATTERS TO BE CONSIDERED: Enforcement matters.

CONTACT PERSON FOR MORE INFORMATION: Jean A. Webb, 202–418–5100.

Jean A. Webb,

Secretary of the Commission.

[FR Doc. 97–15884 Filed 6–12–97; 3:40 pm]

BILLING CODE 6351–01–M

COMMODITY FUTURES TRADING COMMISSION

Sunshine Act Meeting

AGENCY HOLDING THE MEETING: Commodity Futures Trading Commission.

TIME AND DATE: 10:00 a.m., Tuesday, June 17, 1997.

PLACE: 1155 21st St., N.W., Washington, D.C., 9th Floor Conference Room.

STATUS: Closed.

MATTERS TO BE CONSIDERED: Enforcement Matters.

CONTACT PERSON FOR MORE INFORMATION: Jean A. Webb, 202–418–5100.

Jean A. Webb,

Secretary of the Commission.

[FR Doc. 97–15885 Filed 6–12–97; 3:40 pm]

BILLING CODE 6351–01–M

DEPARTMENT OF DEFENSE

Department of the Army

Reserve Officers' Training Corps (ROTC) Program Subcommittee

AGENCY: U.S. Army Cadet Command.

ACTION: Notice of meeting.

SUMMARY: In accordance with Section 10(a)(2) of the Federal Advisory Committee Act (P.L. 92–463), announcement is made of the following committee meeting:

Name of Committee: Reserve Officers' Training Corps (ROTC) Program Subcommittee.

Dates of Meeting: July 15 & 16, 1997.

Place: The Pentagon, Room 1A1079.

Time: 8:30 a.m. to 5:00 p.m. (July 15, 1997); 8:30 a.m. to 12:00 p.m. (July 16, 1997)

Proposed Agenda: Review and discussion of changes to the major ROTC programs since the April 1996 meeting at the Radisson Hotel, Hampton, Virginia.

FOR FURTHER INFORMATION CONTACT: Mr. Roger Spadafora, U.S. Army Cadet command, ATCC–TE, Fort Monroe, Virginia 23651–5000; phone (757) 727–4595.

SUPPLEMENTARY INFORMATION:

1. The subcommittee will review the significant changes in ROTC scholarships, missioning, advertising strategy, marketing, camps and on-campus training, the Junior High School Program and ROTC Nursing.

2. Meeting of the ROTC Program Subcommittee is open to the public. Due to space limitations, attendance may be limited to those persons who have notified the Advisory Committee management Office in writing at least five days prior to the meeting of their intent to attend the July 15 & 16 meeting.

3. Any members of the public may file a written statement with the subcommittee before, during or after the meeting. To the extent that time permits, the subcommittee chairman may allow public presentations or oral statements at the meeting.

4. All communications regarding this advisory subcommittee should be directed to the above address.

Gregory D. Showalter,

Army Federal Register Liaison Officer.

[FR Doc. 97–15686 Filed 6–13–97; 8:45 am]

BILLING CODE 3710–08–M

DEPARTMENT OF DEFENSE

Department of the Army

Protective Service and Accessorial Service Rate Tenders

AGENCY: Military Traffic Management Command, Department of the Army.

ACTION: Notice.

SUMMARY: The Military Traffic Management Command (MTMC), on behalf of the Department of Defense (DOD), intends to modify the procedures used to receive protective and accessorial service rates and charges from the commercial transportation industry. Effective October 1, 1997, motor and rail carriers will no longer be allowed to file protective and accessorial 1000 and 2000 tenders. All 1000 and 2000 tenders must be cancelled by supplement allowing 30 days notice. Carriers may cancel at any time; however, the effective date of the cancellation must not be later than September 30, 1997. All protective and accessorial services will be filed in Section F of the carrier's individual rate tenders.

DATES: These instructions are effective June 16, 1997.

ADDRESSES: Headquarters, Military Traffic Management Command, ATTN: MTOP–T, Room 617, 5611 Columbia Pike, Falls Church, VA 22041–5050.

FOR FURTHER INFORMATION CONTACT: Mr. Walt Scullion, (201) 823–5471 or Ms. Eunice Anderson, (703) 681–9397.

SUPPLEMENTARY INFORMATION: 1000 and 2000 tenders were established to reduce the carriers manual tender filing workload. With the advent of computer and electronic tender filing capabilities via Electronic Data Interchange (EDI), MTMC does not see the necessity of the 1000 and 2000 tenders. MSTIP No. 364–A and all rules publications will be modified to remove reference to the 1000 and 2000 tenders. Upon publication of this notice, carriers will be expected to comply with the above new policy.

Gregory D. Showalter,

Army Federal Register Liaison Officer.

[FR Doc. 97–15684 Filed 5–13–97; 8:45 am]

BILLING CODE 3710–08–M

DEPARTMENT OF DEFENSE

Department of the Army

Availability of U.S. Patents for Non-Exclusive, Exclusive, or Partially Exclusive Licensing

AGENCY: U.S. Army Research Laboratory, Adelphi, Maryland.

ACTION: Notice.

SUMMARY: In accordance with 37 CFR 404.6, announcement is made of the availability of the following U.S. patents for non-exclusive, partially exclusive or exclusive licensing. All of the listed patents have been assigned to the United States of America as represented by the Secretary of the Army, Washington, DC.

These patents cover a wide variety of technical arts including (1) RADAR Interference Chaff (2) Buried Pipe Location (3) Shaped Charges (4) Preform Encapsulation (5) LADAR, as well as many other different technical arts.

Under the authority of Section 11(a)(2) of the Federal Technology Transfer Act of 1986 (Public Law 99–502) and Section 207 of Title 35, United States Code, the Department of the Army, as represented by the U.S. Army Research Laboratory, wishes to license the U.S. patents listed below in a non-

exclusive, exclusive or partially exclusive manner to any party interested in manufacturing, using, and/or selling devices or processes covered by these patents.

Title: Microarc Chaff.
Inventor: Richard N. Johnson.
Patent Number: 5,619,205.
Issue Date: April 8, 1997.

Title: Buried Pipe Locator Utilizing a Change in Ground Capacitance.
Inventor: John E.B. Tuttle.
Patent Number: 5,617,031.
Issue Date: April 1, 1997.

Title: Apparatus for Dispersing a Jet From a Shaped Charge Liner via Non-Uniform Charge Confinement.
Inventor(s): William Walters and Richard Summers.
Patent Number: 5,616,885.
Issue Date: April 1, 1997.

Title: Process for Encapsulating a Shaped Body for Hot Isostatic Pressing by Sol-Gel Method.
Inventor: Kerry Richard.
Patent Number: 5,613,993.
Issue Date: March 25, 1997.

Title: High Range Resolution Ladar.
Inventor(s): Barry L. Stann, William C. Ruff and Zoltan G. Sztankay.
Patent Number: 5,608,514.
Issue Date: March 4, 1997.

FOR FURTHER INFORMATION CONTACT: Ms. Norma Vaught, Technology Transfer Office, AMSRL–CS–TT, U.S. Army Research Laboratory, Adelphi, MD 20783–1197; tel: (301) 394–2952; fax: (301) 394–5815; e-mail: nvaught@arl.mil

SUPPLEMENTARY INFORMATION: None.

Gregory D. Showalter,

Army Federal Register Liaison Officer.

[FR Doc. 97–15685 Filed 6–13–97; 8:45 am]

BILLING CODE 3710–08–M

DEPARTMENT OF DEFENSE

Department of the Army; Corps of Engineers

Intent to Prepare a Draft Environmental Impact Statement (DEIS) for the Indian River Lagoon Restoration Feasibility Study

AGENCY: U.S. Army Corps of Engineers, DoD.

ACTION: Notice of Intent.

SUMMARY: The Jacksonville District, U.S. Army Corps of Engineers (Corps) intends to prepare a Draft Environmental Impact Statement for the Indian River Lagoon Restoration Feasibility Study. The study is a cooperative effort between the Corps and the South Florida Water Management District (SFWMD) which is also a cooperating agency for this DEIS.

FOR FURTHER INFORMATION CONTACT: Steve Traxler, 561–683–2178, or Elmar Kurzbach, 904–232–2325 Environmental Branch, Planning Division, P.O. Box 4970, Jacksonville, Florida 32232–0019.

SUPPLEMENTARY INFORMATION: a. The Central and Southern Florida (C&SF) Project is a multi-purpose project which was first authorized in 1948 to provide flood control, water control, water supply, and other services to the area which stretches from around Orlando to Florida Bay (the southern part of the Florida peninsula). The project has performed its intended purposes well. However, the project has also contributed to the decline of the south Florida ecosystems. The purpose of the C&SF Project Comprehensive Review Study is to holistically re-examine the C&SF Project to determine the feasibility of providing water resources infrastructure that supports the sustainability of south Florida ecosystems. Specifically, the study will investigate structural and operational modifications to the C&SF Project to improve the quality of the environment; protect the aquifer; improve the integrity, capability, and conservation of urban and agricultural water supplies; and improve other water-related purposes. The C&SF Reconnaissance Report described a number of potential feasibility studies including the Indian River Lagoon Restoration.

b. The geographic area encompassed by the Indian River Lagoon Restoration Feasibility Study is generally described as hydrologically removed from the Everglades and Florida Bay ecosystems. The only existing hydraulic connection between those ecosystems is the project Canal (C–44 or St. Lucie Canal) which discharges water from Lake Okeechobee to the St. Lucie Estuary. The Comprehensive Review Study will evaluate alternative regulation schedules for Lake Okeechobee on a comprehensive system-wide basis with due consideration being given to the needs of St. Lucie Estuary and Indian River Lagoon. These two studies will be underway concurrently, the Lake Okeechobee regulation schedules evaluated in the Comprehensive Review Study will be incorporated into the specific benefits and impacts analysis performed for alternatives considered in this study. Similarly, system-wide benefits identified by plan alternatives evaluated in this study will be incorporated into the Comprehensive Review Study. A plan recommended in this study can be considered as a separable element to the overall comprehensive plan for restoration of South Florida.

c. The Indian River Lagoon Restoration Feasibility Study will incorporate components previously identified in the C&SF Project Comprehensive Review Study Reconnaissance Report. Known concepts that will be considered in this feasibility study are summarized in the following paragraphs.

Alternative Actions to be Considered in the Indian River Lagoon Feasibility Study

Alternatives to consider include no action, non-structural measures, and the structural components discussed below, as well as potential, as-yet-unidentified measures or combinations of features to be developed during the study.

Water Preserve Areas (Regional Attenuation Facilities)

a. The Water Preserve Area (WPA) concept, referred to in the Reconnaissance Report as Regional Attenuation Facilities (RAFs), would provide for the diversion of surplus rainfall runoff from the C–23, C–24, C–25, and C–44 drainage basins to storage areas where the water could be treated prior to discharge for environmental base flow for estuarine and other water supply purposes. RAF's would also attempt to reduce the damaging effects of uncontrolled basin runoff during storm events. The reconnaissance phase of the C&SF Project Comprehensive Review Study investigated concepts to capture and store excess surface waters by backpumping stormwater that is normally released directly to tide through the C&SF Project canal system into WPA's along the eastern edge of the Water Conservation Areas. Although the WPA concept for the upper east coast area has not been fully formulated or designed, the concept is analogous to the proposed Water Preserve Areas for the lower east coast which are very important components of the Comprehensive Review Study. These WPA's are expected to serve a number of objectives, including improved water supply for environmental base flow to the estuary, improved water supply for urban and agricultural use, increased short hydroperiod wetlands, reduced sediment loading to the estuary and improved flow control in the region.

b. The Water Preserve Area Task Force jointly established by Martin and St. Lucie County Commissioners has completed a preliminary study of potential locations for WPAs to address the much needed upland retention of stormwater runoff to prevent further degradation of the Indian River Lagoon

and St. Lucie River. The WPA Task Force identified 20 potential sites totaling approximately 65,600 acres. Sites were classified according to basic environmental and engineering design characteristics. The WPA Task Force draft report was published on August 31, 1995 and updated on December 31, 1996. The Task Force recommendations will be investigated further during this feasibility study.

c. Alternative WPA sites will be studied to identify other potential sites that may be less costly, less impacting on wetlands or provide additional water uses. In addition, individual upland runoff storage could be divided among the sub-basins of the study area, interconnected by the existing canal networks, to allow water transfer between sub-basins. Various combinations of facilities and operation scenarios will be evaluated during this feasibility study.

Upper East Coast Flowway (C–131)

a. The concept presented in the reconnaissance report included a 10,500 acre water quality treatment facility (flowway) located at the western juncture of Martin and St. Lucie counties, and a feature that would allow excess treated water to be backpumped into Lake Okeechobee when other needs are being met.

b. The C–131 concept was first documented in the Survey-Review Report on Central and Southern Florida Project Martin County Florida, September 22, 1967. It was further discussed in the Corps' Central and Southern Florida Project, Part III, Supplement II, General Design Memorandum (GDM), Martin County (St. Lucie County Water Supply Element), dated June 1984. The basic plan in the GDM was the backpumping of stormwater from C–23, C–24, and C–25 through a flowway, or nutrient consuming marsh, before discharging the water into Lake Okeechobee through the proposed C–131 canal. This concept will be revisited during the feasibility study. The C–131 canal plan was deferred from further consideration until the completion of other water resource studies which would assure the availability of water for irrigation uses in the general area.

On-Site Detention/Retention

On-site detention/retention is similar to the water preserve area proposal except that the detention/retention facilities would generally be individually constructed on privately developed land as opposed to large publicly owned regional facilities. The analysis conducted by this study will assume that the on-site facilities will be designed according to the applicable regulatory criteria of the SFWMD. On a site by site basis, benefits similar to those provided by RAF's may be realized. Stormwater discharges would be reduced and water quality would be improved. On-site detention/retention could also be designed to provide water supply benefits. However, any water supply benefits would probably be limited to the owner of the land where the on-site facility was located. The present study will evaluate whether a sufficient number of on-site facilities could significantly reduce stormwater discharges and improve water quality enough to benefit St. Lucie Estuary and the Indian River Lagoon. This alternative would require regulatory action by SFWMD. It is included in this study to evaluate the cost effectiveness of on-site detention and will be compared to providing regionally based solutions.

St. Lucie Flowway

a. The St. Lucie Flowway proposed in the reconnaissance study would capture some excess runoff in the C–44 basin that is now diverted to tide and divert the flow to the Loxahatchee National Wildlife Refuge (Water Conservation Area 1). The flowway would originate at C–44 near Indiantown and divert flows south through the Corbett Wildlife Management Area to the proposed Everglades Construction Project divide structure S–316 that is intended to divert flows south to WCA–1. Diverted water would then be available for use in the Everglades system via WCA–1. The reconnaissance study also concluded that alternative sites for the flowway should be investigated to minimize adverse effects on existing natural areas, such as the Corbett Wildlife Management Areas. An alternative proposed in the reconnaissance study was to divert excess C–44 basin runoff to the north to a proposed regional attenuation facility.

b. The St. Lucie Flowway can be expected to serve a number of objectives including water quality improvement, increased supply, restoration of short hydroperiod wetlands, reduced sediment loading to the estuary and improved flood control.

Removal of St. Lucie Organic Sediments

a. Fine, organic-rich sediments (ooze or muck) have accumulated in the St. Lucie Estuary. Organic sediments, which are carried to the estuary as suspended load through the C–44, C–23 and C–24 canals, settle out in the estuary as the result of the interaction between the fresh and estuarine water. The highly organic sediment depletes the dissolved oxygen in the water column through natural chemical processes. The fine particulate sediments, composed of organic matter and silt, can also be re-suspended in the water column by wind and current action, creating turbidity conditions which diminish light penetration needed to maintain seagrass communities.

b. In a 1994 report on a muck removal demonstration project, the South Florida Water Management District concluded that large-scale sediment removal may improve water quality by reducing re-suspension of fine sediments during periods of physical disturbance, and would reduce oxygen demands in the water column. Further, exposing a courser grained substrate along the littoral shelf may promote a more diverse and abundant benthic macroinvertebrate community which would increase feeding opportunities for bottom feeding fish. However, the report recommended that further studies be undertaken prior to proceeding with the demonstration project. This study will further investigate the feasibility of a muck removal project.

Water Supply Alternatives

The exiting C&SF Project was designed to provide regional water supply for the study area. Consequently, alternatives developed for this feasibility study will identify urban and agricultural water supply demands and will include water supply features to help meet identified regional needs, including environmental needs and the potential conflicts that this may create with other water users. All of the alternatives described above have features related to the C&SF Project that are consistent with water supply and will be further evaluated as part of the plan formulation process during this feasibility study. These alternatives could be further developed for water supply by adding features such as aquifer storage and recovery.

Issues

The DEIS will consider impacts on protected species, wetlands health and safety, water quality, aesthetics and recreation, fish and wildlife resources, cultural resources, energy conservation, land use, socioeconomic resources, and other impacts identified through scoping, public involvement, and interagency coordination.

Scoping

A scoping letter was sent to interested parties on December 2, 1996. In addition, all parties are invited to

participate in the scoping process by identifying any additional concerns on issues, studies needed, alternatives, procedures, and other matters related to the scoping process. At this time, there are no plans for a public scoping meeting.

Public Involvement

We invite the participation of affected Federal, state and local agencies, affected Indian tribes, and other interested private organizations and parties.

Coordination

The proposed action is being coordinated with the U.S. Fish and Wildlife Service (FWS) and the National Marine Fisheries Service under Section 7 of the Endangered Species Act, with the FWS under the Fish and Wildlife Coordination Act, and with the State Historic Preservation Officer under the Natural Historic Preservation Act. On a working level, the proposed action is being conducted by an interdisciplinary/interagency team combining local, state, and federal organizations.

Other Environmental Review and Consultation

The proposed action would involve evaluation for compliance with guidelines pursuant to Section 404(b) of the Clean Water Act; application (to the State of Florida) for Environmental Resource Permits pursuant to Section 401 of the Clean Water Act; certification of state lands, easements, and rights of way; and determination of Coastal Zone Management Act consistency.

Agency Role

As cooperating agency, non-Federal sponsor, and leading local expert; SFWD will provide extensive information and assistance on the resources to be impacted and alternatives.

DEIS Preparation

It is estimated that the DEIS will be available to the public in September, 1999.

Gregory D. Showalter,

Army Federal Register Liaison Officer.

[FR Doc. 97–15683 Filed 6–13–97; 8:45 am]

BILLING CODE 3710–AS–M

DEFENSE NUCLEAR FACILITIES SAFETY BOARD

Privacy Act; Systems of Records

AGENCY: Defense Nuclear Facilities Safety Board.

ACTION: New system of records.

SUMMARY: Each Federal agency is required by the Privacy Act of 1974, 5 U.S.C. 552a, to publish a description of the systems of records it maintains containing personal information. In this notice the Board announces a new system of records.

FOR FURTHER INFORMATION CONTACT: Richard A. Azzaro, Acting General Counsel, Defense Nuclear Facilities Safety Board, 625 Indiana Avenue, N.W., Suite 700, Washington, D.C. 20004–2901, (202) 208–6387.

SUPPLEMENTARY INFORMATION:

The new system of records, designated NDFSB–6, is described below.

DNFSB–6

SYSTEM NAME:

DNFSB Staff Resume Book.

SECURITY CLASSIFICATION:

Unclassified materials.

SYSTEM LOCATION:

Defense Nuclear Facilities Safety Board, 625 Indiana Avenue, N.W., Washington, D.C. 20004–2901.

CATEGORIES OF INDIVIDUALS COVERED BY THE SYSTEM:

Members of the Board's technical and legal staff.

CATEGORIES OF RECORDS IN THE SYSTEM:

A summary of each employee's educational background and work experience, with emphasis on areas relevant to the individual's work at the Board.

AUTHORITY FOR MAINTENANCE OF THE SYSTEM.

National Defense Authorization Act, Fiscal Year 1989 (amended the Atomic Energy Act of 1954 (42 U.S.C. § 2011 et seq.) by adding new Chapter 21—Defense Nuclear Facilities Safety Board).

ROUTINE USES OF RECORDS MAINTAINED IN THE SYSTEM, INCLUDING CATEGORIES OF USERS AND THE PURPOSE OF SUCH USES:

The Resume Book may be distributed to representatives of the press, Congressional staff, representatives of State and local governments, and to any member of the public or any organization having a legitimate interest in understanding the technical and legal qualifications of the Board's staff.

POLICIES AND PRACTICES FOR STORING, RETRIEVING, ACCESSING, RETAINING, AND DISPOSING OF RECORDS IN THE SYSTEM:

STORAGE:

Paper records and computer files.

RETRIEVABILITY:

By employee name.

SAFEGUARDS:

Copies of the Resume Book will be sequentially numbered and all copies will be stored under the control of a Board employee. A record will be kept of each disclosure of the book by name of the receiving party and purpose for which the information is provided. The Resume Book will not be available via Internet nor will it be placed in the Board's Public Reading Room.

RETENTION AND DISPOSAL:

The Resume Book will be periodically updated, and out-of-date copies will be destroyed when updated copies are printed.

SYSTEM MANAGER AND ADDRESS:

Defense Nuclear Facilities Safety Board, 625 Indiana Avenue, N.W., Suite 700, Washington, D.C. 20004–2901. Attention: Andrew Thibadeau.

NOTIFICATION PROCEDURE:

Board employees covered by the Resume Book may examine it at any time. They may also examine the list of disclosures maintained by the System Manager.

RECORD ACCESS PROCEDURE:

Same as Notification Procedure.

CONTESTING RECORD PROCEDURE:

Any Board employee covered by the Resume Book may request that corrections be made in his/here resume at any time.

RECORD SOURCE CATEGORIES:

Subject individuals.

SYSTEM EXEMPTED FROM CERTAIN PROVISIONS OF THE ACT:

None.

Dated: June 11, 1997.

John T. Conway,

Chairman.

[FR Doc. 97–15722 Filed 6–13–97; 8:45 am]

BILLING CODE 3670–01–M

DEPARTMENT OF ENERGY

Bonneville Power Administration

Transmission System Vegetation Management Program

AGENCY: Bonneville Power Administration (BPA), Department of Energy (DOE).

ACTION: Notice of intent to prepare an Environmental Impact Statement (EIS).

SUMMARY: This notice announces BPA's intention to prepare an EIS on

principles for implementing BPA's Transmission System Vegetation Management Program. In accordance with the Federal Columbia River Transmission System Act of 1974, the Administrator ''shall operate and maintain the Federal transmission system to * * * maintain the electrical stability and electrical reliability of the Federal (transmission) system * * *.'' In order to ensure safe and reliable power, BPA must control the vegetation on land around the electrical transmission facilities.

BPA has invited the U.S. Forest Service and the Bureau of Land Management to be cooperating agencies in this EIS process. They have been asked to participate in the formal scoping process; to review resource analysis; and to assist in developing alternative principles to guide the standards, techniques, and procedures used in BPA's Transmission System Vegetation Management Program. These agencies were invited because they manage some of the land where BPA transmission facilities are located.

BPA invites public comment on the range of actions, alternatives, and impacts to be addressed in the Transmission System Vegetation Management Program EIS.

DATES: BPA has established a scoping period during which affected landowners, concerned citizens, special interest groups, local governments, and any other interested parties are invited to comment on the scope of the EIS. BPA will hold one scoping meeting (possibly more depending on public interest) and will contact tribes, agencies, and groups interested in BPA's Vegetation Management Program. Written comments are due to the address below no later than July 23, 1997.

ADDRESSES: Send comment letters and requests to be placed on the project mailing list to Communications, Bonneville Power Administration—ACS–7, P.O. Box 12999, Portland, Oregon, 97212. The phone number of the Communications office is 503–230–3478 in Portland (toll-free 1–800–622–4519 outside of Portland); or comment at our internet address at: comment@bpa.gov.

FOR FURTHER INFORMATION, CONTACT: Tammie Vincent at (503) 230–3469, Bonneville Power Administration—ECN–4, P.O. Box 3621, Portland, Oregon, 97208–3621.

SUPPLEMENTARY INFORMATION: BPA owns and operates a high-voltage transmission system throughout Washington and Oregon, and in parts of Idaho, Montana, Wyoming, and California. To ensure safe, reliable service, vegetation is managed as part of the normal operation of the transmission system.

Proposed Action

BPA proposes to review its Transmission System Vegetation Management Program and set principles to guide the planning and implementation of vegetation management techniques used in the program. The objective of the proposed action is to provide the most cost-effective, efficient, and environmentally acceptable means of controlling vegetation that may threaten transmission system safety and reliability. General issues the EIS may address include the following: vegetation management, land management, water quality management, fish and wildlife management, threatened and endangered species management, cultural resources management, and economic effects. Additional issues may be identified by the public scoping process; scoping may also eliminate some issues from in-depth analysis. The EIS will develop broad, program-wide standards and practices for planning and implementing vegetation management. Site-specific analysis would then be tiered to the Program EIS, when needed.

Information developed from other environmental reviews, especially concerning vegetation management in the Pacific Northwest, may be included in the BPA Transmission System Vegetation Management Program EIS, as appropriate.

Current Practice

BPA currently manages vegetation with a mix of techniques on a project-by-project basis. This approach does not foster consistency across projects, jurisdictions, BPA's regions, or over time. BPA needs to find a way to ensure consistency.

Alternatives Proposed for Consideration

Alternatives to be considered in the BPA Transmission System Vegetation Management Program EIS would include alternative vegetation management planning and implementation principles for each management issue addressed. The EIS will also consider a No Action alternative, i.e., continuing project-by-project vegetation management without defined program-or region-wide standards and guidelines.

Identification of Environmental Issues

The environmental issues associated with transmission system vegetation management include potential effects on land use, vegetation communities, water quality, human health and safety, and wildlife populations.

Issued in Portland, Oregon, on June 6, 1997.

Randall W. Hardy,

Administrator and Chief Executive Officer.

[FR Doc. 97–15711 Filed 6–13–97; 8:45 am]

BILLING CODE 6540–01–P

DEPARTMENT OF ENERGY

Federal Energy Regulatory Commission

[Docket No. ER97–1546–001]

Illinova Energy Partners, Inc.; Notice of Filing

June 10, 1997.

Take notice that on May 5, 1997, Illinova Energy Partners, Inc. tendered for filing its compliance filling in the above-referenced docket.

Any person desiring to be heard or to protest said filing should file a motion to intervene or protest with the Federal Energy Regulatory Commission, 888 First Street, NE., Washington, DC 20426, in accordance with Rules 211 and 214 of the Commission's Rules of Practice and Procedure (18 CFR 385.211 and 18 CFR 385.214). All such motions or protests should be filed on or before June 20, 1997. Protests will be considered by the Commission in determining the appropriate action to be taken, but will not serve to make protestants parties to the proceeding. Any person wishing to become a party must file a motion to intervene. Copies of this filing are on file with the Commission and are available for public inspection.

Lois D. Cashell,

Secretary.

[FR Doc. 97–15657 Filed 6–13–97; 8:45 am]

BILLING CODE 6717–01–M

DEPARTMENT OF ENERGY

Federal Energy Regulatory Commission

[Docket No. CP97–558–000]

Northern Natural Gas Company; Notice of Request Under Blanket Authorization

June 10, 1997.

Take notice that on June 2, 1997, Northern Natural Gas Company

(Northern), 1111 South 103rd Street, Omaha, Nebraska 68124–1000, filed in Docket No. CP97–558–000 a request pursuant to Sections 157.205, 157.212 and 157.216 of the Commission's Regulations under the Natural Gas Act (18 CFR 157.205, 157.212 and 157.216) for authorization to upgrade the Baldwin #1 TBS and to retire the existing meter and appurtenant facilities associated with the proposed upgrade, under Northern's blanket certificate issued in Docket No. CP82–401–000 pursuant to Section 7 of the Natural Gas Act, all as more fully set forth in request on file with the Commission and open to public inspection.

Northern proposes to upgrade the Baldwin #1 TBS, an existing delivery point located in St. Croix County, Wisconsin, to accommodate increased natural gas deliveries to Wisconsin Gas Company (WGC) under Northern's currently effective throughput service agreement(s). Northern states that WGC requested that the Baldwin #1 TBS be upgraded due to a growth of natural gas requirements in that area. The proposed increase in volumes to be delivered to WGC at the Baldwin #1 TBS are 60 MMBtu on a peak day and 5,414 MMBtu on an annual basis. The total estimated upgrade is $90,000 and all construction will be completed within the existing station yard with minimal ground disturbance.

Northern states that the proposed activity is not prohibited by its existing tariff, that it has sufficient capacity for deliveries without detriment or disadvantage to other customers and that the total volumes delivered will not exceed total volumes authorized prior to this request.

Any person or the Commission's staff may, within 45 days after issuance of the instant notice by the Commission, file pursuant to Rule 214 of the Commission's Procedural Rules (18 CFR 385.214) a motion to intervene or notice of intervention and pursuant to Section 157.205 of the Regulations under the Natural Gas Act (18 CFR 157.205) a protest to the request. If no protest is filed within the time allowed therefore, the proposed activity shall be deemed to be authorized effective the day after the time allowed for filing a protest. If a protest is filed and not withdrawn within 30 days after the time allowed for filing a protest, the instant request shall be treated as an application for authorization pursuant to Section 7 of the Natural Gas Act.

Lois D. Cashell,

Secretary.

[FR Doc. 97–15655 Filed 6–13–97; 8:45 am]

BILLING CODE 6717–01–M

DEPARTMENT OF ENERGY

Federal Energy Regulatory Commission

[Docket No. EC97–37–000]

Tucson Electric Power Company; Notice of Filing

June 10, 1997.

Take notice that on June 2, 1997, Tucson Electric Power Company (TEP) submitted an application pursuant to Section 203 of the Federal Power Act for authority to effect a ''disposition of facilities'' that would be deemed to occur as a result of the implementation of a proposed holding company structure.

Any person desiring to be heard or to protest said filing should file a motion to intervene or protest with the Federal Energy Regulatory Commission, 888 First Street, N.E., Washington, D.C. 20426, in accordance with Rules 211 and 214 of the Commission's Rules of Practice and Procedure (18 CFR 385.211 and 18 CFR 385.214). All such motions or protests should be filed on or before July 7, 1997. Protests will be considered by the Commission in determining the appropriate action to be taken, but will not serve to make protestants parties to the proceedings. Copies of this filing are on file with the Commission and are available for public inspection.

Lois D. Cashell,

Secretary.

[FR Doc. 97–15656 Filed 6–13–97; 8:45 am]

BILLING CODE 6717–01–M

DEPARTMENT OF ENERGY

Federal Energy Regulatory Commission

[Docket No. ER97–2936–000]

Wisconsin Power & Light Company; Notice of Filing

June 10, 1997.

Take notice that on May 14, 1997, Wisconsin Power & Light Company tendered for filing a temporary revision to its Emergency Energy Service Schedules in its Bulk Power Sales Tariff and its Interconnection/Interchange Agreements with Wisconsin Electric Power Company, Madison Gas and Electric, and Wisconsin Public Power Inc. System. This change will allow WP&L to recover costs incurred in the Share the Pain program. WP&L is requesting an effective date of May 15, 1997, and a termination date of September 30, 1997.

Any person desiring to be heard or to protest said filing should file a motion to intervene or protest with the Federal Energy Regulatory Commission, 888 First Street, N.E., Washington, D.C. 20426, in accordance with Rules 211 and 214 of the Commission's Rules of Practice and Procedure (18 CFR 385.211 and 18 CFR 305.214). All such motions or protests should be filed on or before June 20, 1997. Protests will be considered by the Commission in determining the appropriate action to be taken, but will not serve to make protestants parties to the proceeding. Any person wishing to become a party must file a motion to intervene. Copies of this filing are on file with the Commission and are available for public inspection.

Lois D. Cashell,

Secretary.

[FR Doc. 97–15658 Filed 6–13–97; 8:45 am]

BILLING CODE 6717–01–M

DEPARTMENT OF ENERGY

Federal Energy Regulatory Commission

[Docket No. ER97–3060–000, et al.]

Southern Company Services, Inc., et al. Electric Rate and Corporate Regulation Filings

June 9, 1997.

Take notice that the following filings have been made with the Commission:

1. Southern Company Services, Inc.

[Docket No. ER97–3060–000]

Take notice that on May 27, 1997, Southern Company Services, Inc. (''SCS''), acting on behalf of Alabama Power Company, Georgia Power Company, Gulf Power Company, Mississippi Power Company, and Savannah Electric and Power Company (collectively referred to as ''Southern Companies'') filed one (1) service agreement between SCS, as agent for Southern Companies, and the City of Tallahassee, Florida for firm point-to-point transmission service and one (1) service agreement between SCS, as agent for Southern Companies, and Kentucky Utilities Company for non-firm point-to-point transmission service under Part II of the Open Access Transmission Tariff of Southern Companies.

Comment date: June 23, 1997, in accordance with Standard Paragraph E at the end of this notice.

2. Central Illinois Public Service Company

[Docket No. ER97–3065–000]

Take notice that on May 27, 1997, Central Illinois Public Service Company

(''CIPS''), submitted service agreements establishing AYP Energy, Inc. and Plum Street Marketing, Inc. as new customers under the terms of CIPS' Coordination Sales Tariff CST–1 (''CST–1 Tariff'').

CIPS requests an effective date of May 16, 1997, for the two service agreements with new customers and the revised Index of Customers. Accordingly, CIPS requests waiver of the Commission's notice requirements. Copies of this filing were served upon the two customers and the Illinois Commerce Commission.

Comment date: June 23, 1997, in accordance with Standard Paragraph E at the end of this notice.

3. South Carolina Electric & Gas Company

[Docket No. ER97–3066–000]

Take notice that on May 27, 1997, South Carolina Electric & Gas Company (''SCE&G''), submitted a service agreement establishing South Carolina Public Service Authority (''SCPSA'') as a customer under the terms of SCE&G's Open Access Transmission Tariff.

SCE&G requests an effective date of one day subsequent to the filing of the service agreement. Accordingly, SCE&G requests waiver of the Commission's notice requirements. Copies of this filing were served upon SCPSA and the South Carolina Public Service Commission.

Comment date: June 23, 1997, in accordance with Standard Paragraph E at the end of this notice.

4. Southwestern Electric Power Company

[Docket No. ER97–3068–000]

Take notice that on May 27, 1997, Southwestern Electric Power Company (SWEPCO), tendered for filing a letter agreement, dated April 30, 1997, between SWEPCO and East Texas Electric Cooperative, Inc. (''ETEC''). The letter agreement amends the February 10, 1993, Power Supply Agreement (PSA) between SWEPCO and ETEC by waiving the May 1997 monthly facilities charge that ETEC would have incurred under the PSA.

SWEPCO requests that the Amendment be accepted to become effective May 1, 1997. Copies of the filing were served upon ETEC and the Public Utility Commission of Texas.

Comment date: June 23, 1997, in accordance with Standard Paragraph E at the end of this notice.

5. Cinergy Services, Inc.

[Docket No. ER97–3069–000]

Take notice that on May 27, 1997, Cinergy Services, Inc. (Cinergy), tendered for filing on behalf of its operating companies, The Cincinnati Gas & Electric Company (CG&E) and PSI Energy, Inc. (PSI), an Interchange Agreement, dated April 1, 1997 between Cinergy, CG&E, PSI and The Utility—Trade Corp. (UTC).

The Interchange Agreement provides for the following service between Cinergy and UTC:

1. Exhibit A—Power Sales by UTC
2. Exhibit B—Power Sales by Cinergy

Cinergy and UTC have requested an effective date of one day after this initial filing of the Interchange Agreement.

Copies of the filing were served on The Utility—Trade Corp., the Kentucky Public Service Commission, the National Energy Board (Canada), the Public Utilities Commission of Ohio and the Indiana Utility Regulatory Commission.

Comment date: June 23, 1997, in accordance with Standard Paragraph E at the end of this notice.

6. Duquesne Light Company

[Docket No. ER97–3070–000]

Take notice that on May 27, 1997, Duquesne Light Company (''DLC''), filed a Service Agreement dated May 21, 1997 with CMS Marketing, Service and Trading Company under DLC's Open Access Transmission Tariff (''Tariff''). The Service Agreement adds CMS Marketing, Service and Trading Company as a customer under the Tariff. DLC requests an effective date of May 21, 1997, for the Service Agreement.

Comment date: June 23, 1997, in accordance with Standard Paragraph E at the end of this notice.

7. Duquesne Light Company

[Docket No. ER97–3071–000]

Take notice that on May 27, 1997, Duquesne Light Company (''DLC''), filed a Service Agreement dated May 21, 1997 with Delhi Energy Services, Inc. under DLC's Open Access Transmission Tariff (''Tariff''). The Service Agreement adds Delhi Energy Services, Inc. as a customer under the Tariff. DLC requests an effective date of May 21, 1997, for the Service Agreement.

Comment date: June 23, 1997, in accordance with Standard Paragraph E at the end of this notice.

8. Union Electric Company

[Docket No. ER97–3072–000]

Take notice that on May 28, 1997, Union Electric Company (UE), tendered for filing Service Agreements for Firm Point-to-Point Transmission Services between Koch Energy Trading, Inc. (Koch) and UE. UE asserts that the purpose of the Agreements is to permit UE to provide transmission service to Koch pursuant to UE's Open Access Transmission Tariff filed in Docket No. OA96–50.

Comment date: June 23, 1997, in accordance with Standard Paragraph E at the end of this notice.

9. Duke Power Company

[Docket No. ER97–3073–000]

Take notice that on May 28, 1997, Duke Power Company (''Duke''), tendered for filing a Transmission Service Agreement between Duke, on its own behalf and acting as agent for its wholly-owned subsidiary, Nantahala Power and Light Company, and New York State Electric and Gas Corporation, dated as of April 14, 1997 (''TSA''). The parties have not engaged in any transactions under the TSA as of the date of filing. Duke states that the TSA sets out the transmission arrangements under which Duke will provide New York State Electric and Gas Corporation non-firm point-to-point transmission service under Duke's Pro Forma Open Access Transmission Tariff. Duke requests that the Agreement be made effective as of May 1, 1997.

Comment date: June 23, 1997, in accordance with Standard Paragraph E at the end of this notice.

10. The Detroit Edison Company

[Docket No. ER97–3074–000]

Take notice that on May 28, 1997, The Detroit Edison Company (''Detroit Edison''), tendered for filing a Service Agreement for wholesale power sales transactions (the ''Service Agreement'') under Detroit Edison's Wholesale Power Sales Tariff (WPS–1), FERC Electric Tariff No. 4 (the ''WPS–1 Tariff''), between Detroit Edison and Duquesne Light Company (''Duquesne''), dated as of April 28, 1997. Detroit Edison requests that the Service Agreement be made effective as of April 28, 1997.

Comment date: June 23, 1997, in accordance with Standard Paragraph E at the end of this notice.

11. The Detroit Edison Company

[Docket No. ER97–3075–000]

Take notice that on May 28, 1997, The Detroit Edison Company (''Detroit Edison''), tendered for filing a Service Agreement for wholesale power sales transactions (the ''Service Agreement'') under Detroit Edison's Wholesale Power Sales Tariff (WPS–2), FERC Electric Tariff No. 3 (the ''WPS–2 Tariff''), between Detroit Edison and The Cleveland Electric Illuminating Company (''Cleveland''), dated as of February 27, 1997. The parties did not

engage in any transactions under the TSA prior to May 7, 1997. Detroit Edison requests that the Service Agreement be made effective as of May 7, 1997.

Comment date: June 23, 1997, in accordance with Standard Paragraph E at the end of this notice.

12. Northern States Power Company (Minnesota)

[Docket No. ER97–3076–000]

Take notice that on May 28, 1997, Northern States Power Company (Minnesota) (''NSP''), tendered for filing a Firm Point-to-Point Transmission Service Agreement between NSP and Sonat Power Marketing L.P.

NSP requests that the Commission accept the agreement effective April 29, 1997, and requests waiver of the Commission's notice requirements in order for the agreements to be accepted for filing on the date requested.

Comment date: June 23, 1997, in accordance with Standard Paragraph E at the end of this notice.

13. Northern States Power Company (Minnesota)

[Docket No. ER97–3077–000]

Take notice that on May 28, 1997, Northern States Power Company (Minnesota) (''NSP''), tendered for filing a Firm Point-to-Point Transmission Service Agreement between NSP and Wisconsin Public Service Corporation.

NSP requests that the Commission accept the agreement effective May 1, 1997, and requests waiver of the Commission's notice requirements in order for the agreements to be accepted for filing on the date requested.

Comment date: June 23, 1997, in accordance with Standard Paragraph E at the end of this notice.

14. Entergy Services, Inc.

[Docket No. ER97–3078–000]

Take notice that on May 28, 1997, Entergy Services, Inc. (''Entergy Services''), acting as agent for Entergy Arkansas, Inc., Entergy Gulf States, Inc., Entergy Louisiana, Inc., Entergy Mississippi, Inc., Entergy New Orleans, Inc. (collectively, the ''Entergy Operating Companies''), tendered for filing a Short-Term Market Rate (Schedule SP) Sales Agreement (''Service Agreement'') by and between Entergy Services and South Mississippi Electric Power Association, dated May 1, 1997. Entergy Services requests that the Service Agreement be made effective as of May 1, 1997.

Comment date: June 23, 1997, in accordance with Standard Paragraph E at the end of this notice.

15. Entergy Services, Inc.

[Docket No. ER97–3079–000]

Take notice that on May 28, 1997, Entergy Services, Inc. (''Entergy Services''), on behalf of Entergy Arkansas, Inc., Entergy Gulf States, Inc., Entergy Louisiana, Inc., Entergy Mississippi, Inc., and Entergy New Orleans, Inc. (collectively, the ''Entergy Operating Companies''), tendered for filing a Non-Firm Point-To-Point Transmission Service Agreement between Entergy Services, as agent for the Entergy Operating Companies, and Carolina Power & Light Company.

Comment date: June 23, 1997, in accordance with Standard Paragraph E at the end of this notice.

16. Entergy Services, Inc.

[Docket No. ER97–3080–000]

Take notice that on May 28, 1997, Entergy Services, Inc. (''Entergy Services''), on behalf of Entergy Arkansas, Inc., Entergy Gulf States, Inc., Entergy Louisiana, Inc., Entergy Mississippi, Inc., and Entergy New Orleans, Inc. (collectively, the ''Entergy Operating Companies''), tendered for filing a Non-Firm Point-To-Point Transmission Service Agreement between Entergy Services, as agent for the Entergy Operating Companies, and American Energy Solutions, Inc.

Comment date: June 23, 1997, in accordance with Standard Paragraph E at the end of this notice.

Standard Paragraph

E. Any person desiring to be heard or to protest said filing should file a motion to intervene or protest with the Federal Energy Regulatory Commission, 888 First Street, N.E., Washington, D.C. 20426, in accordance with Rules 211 and 214 of the Commission's Rules of Practice and Procedure (18 CFR 385.211 and 18 CFR 385.214). All such motions or protests should be filed on or before the comment date. Protests will be considered by the Commission in determining the appropriate action to be taken, but will not serve to make protestants parties to the proceeding. Any person wishing to become a party must file a motion to intervene. Copies of this filing are on file with the Commission and are available for public inspection.

Lois D. Cashell,

Secretary.

[FR Doc. 97–15654 Filed 6–13–97; 8:45 am]

BILLING CODE 6717–01–P

DEPARTMENT OF ENERGY

Federal Energy Regulatory Commission

[Docket No. ER97–3037–000, et al.]

UtiliCorp United Inc., et al.; Electric Rate and Corporate Regulation Filings

June 6, 1997.

Take notice that the following filings have been made with the Commission:

1. UtiliCorp United Inc.

[Docket No. ER97–3037–000]

Take notice that on May 21, 1997, UtiliCorp United Inc. (UtiliCorp) filed service agreements with Vastar Power Marketing, Inc. for service tariff for its operating divisions, Missouri Public Service, WestPlains Energy-Kansas and WestPlains Energy-Colorado.

Comment date: June 20, 1997, in accordance with Standard Paragraph E at the end of this notice.

2. Central Illinois Light Company

[Docket No. ER97–3038–000]

Take notice that on May 22, 1997, Central Illinois Light Company (CILCO), 300 Liberty Street, Peoria, Illinois 61202, tendered for filing with the Commission a substitute Index of Customers under its Coordination Sales Tariff and service agreements for one new customer.

CILCO requested an effective date of May 23, 1997.

Copies of the filing were served on all affected customers parties and the Illinois Commerce Commission.

Comment date: June 20, 1997, in accordance with Standard Paragraph E at the end of this notice.

3. Additional Signatories to PJM Interconnection, L.L.C. Operating Agreement

[Docket No. ER97–3039–000]

Take notice that on May 21, 1997, the PJM Interconnection, L.L.C. (PJM) filed, on behalf of the Members of the LLC, membership applications of Morgan Stanley Capital Group, Inc. and Consolidated Edison Company of New York, Inc. PJM requests an effective date of March 31, 1997.

Comment date: June 20, 1997, in accordance with Standard Paragraph E at the end of this notice.

4. Dayton Power and Light Company

[Docket No. ER97–3040–000]

Take notice that on May 21, 1997, Dayton Power and Light Company (DPL), tendered for filing an amendment to DPL's Market Based Sales Tariff.

Comment date: June 20, 1997, in accordance with Standard Paragraph E at the end of this notice.

5. Dayton Power and Light Company

[Docket No. ER97–3041–000]

Take notice that on May 21, 1997, Dayton Power and Light Company (Dayton), tendered for filing an amendment to Dayton's Market Based Sales Tariff.

Comment date: June 20, 1997, in accordance with Standard Paragraph E at the end of this notice.

6. Nevada Power Company

[Docket No. ER97–3042–000]

Take notice that on May 21, 1997, Nevada Power Company (Nevada Power), tendered for filing a proposed revised price sheet to the Purchased Power Agreement between the Colorado River Commission (CRC) and Nevada Power Company (Exhibit A) having a proposed effective date of June 1, 1997.

Exhibit A provides for an increase in rates to the CRC and an increase in the maximum on-peak firm capacity take for the period June 1, 1997 to May 31, 1998.

Copies of this filing have been served on the CRC and the Nevada Public Service Commission.

Comment date: June 20, 1997, in accordance with Standard Paragraph E at the end of this notice.

7. Cinergy Services, Inc.

[Docket No. ER97–3043–000]

Take notice that on May 22, 1997, Cinergy Services, Inc. (Cinergy), tendered for filing a service agreement under Cinergy's Open Access Transmission Service Tariff (the Tariff) entered into between Cinergy and The Detroit Edison Company (Detroit).

Cinergy and Detroit are requesting an effective date of May 21, 1997.

Comment date: June 20, 1997, in accordance with Standard Paragraph E at the end of this notice.

8. Wisconsin Electric Power Company

[Docket No. ER97–3044–000]

Take notice that on May 22, 1997, Wisconsin Electric Power Company (Wisconsin Electric), tendered for filing a Non-Firm Transmission Service Agreement between itself and PacifiCorp Power Marketing, Inc. The Transmission Service Agreement allows PacifiCorp Power Marketing, Inc. to receive non-firm transmission service under Wisconsin Electric's FERC Electric Tariff, volume No. 7.

Wisconsin Electric requests an effective date of sixty days from date of filing. Copies of the filing have been served on PacifiCorp Power Marketing, Inc., the Public Service Commission of Wisconsin and the Michigan Public Service Commission.

Comment date: June 20, 1997, in accordance with Standard Paragraph E at the end of this notice.

9. Tucson Electric Power Company

[Docket No. ER97–3045–000]

Take notice that on May 22, 1997, Tucson Electric Power Company (TEP), tendered for filing a service agreement with Texas-New Mexico Power Company for non-firm point-to-point transmission service under Part II of its Open Access Transmission Tariff filed in Docket No. OA96–140–000. TEP requests waiver of notice to permit the service agreement to become effective as of April 22, 1997.

A copy of this filing has been served on Texas-New Mexico Power Company.

Comment date: June 20, 1997, in accordance with Standard Paragraph E at the end of this notice.

10. Pennsylvania Power & Light Company

[Docket No. ER97–3046–000]

Take Notice that on May 22, 1997, Pennsylvania Power & Light Company (PP&L), filed a Service Agreement dated May 19, 1997 with Eastern Power Distribution, Inc. under PP&L's FERC Electric Tariff, Original Volume No. 1. The Service Agreement adds Eastern Power Distribution, Inc. as an eligible customer under the Tariff.

PP&L requests an effective date of May 22, 1997, for the Service Agreement.

PP&L states that copies of this filing have been supplied to Eastern Power Distribution, Inc. and to the Pennsylvania Public Utility Commission.

Comment date: June 20, 1997, in accordance with Standard Paragraph E at the end of this notice.

11. Pennsylvania Power & Light Company

[Docket No. ER97–3047–000]

Take Notice that on May 22, 1997, Pennsylvania Power & Light Company (PP&L), filed a Service Agreement dated May 19, 1997 with The Toledo Edison Company under PP&L's FERC Electric Tariff, Original Volume No. 1. The Service Agreement adds The Toledo Edison Company as an eligible customer under the Tariff.

PP&L requests an effective date of May 22, 1997, for the Service Agreement.

PP&L states that copies of this filing have been supplied to The Toledo Edison Company and to the Pennsylvania Public Utility Commission.

Comment date: June 20, 1997, in accordance with Standard Paragraph E at the end of this notice.

12. Cadillac Renewable Energy LLC

[Docket No. ER97–3048–000]

Take notice that on May 22, 1997, Cadillac Renewable Energy LLC (CRE), submitted for filing a Notice of Succession pursuant to which it will assume the rights and obligations of Beaver Michigan Associates Limited Partnership (BMALP) under a power purchase agreement between BMALP as seller and Consumers Energy Company (Consumers) for the sale of power from a 34 MW qualifying small power production facility. CRE also submitted an amendment to the power purchase agreement.

CRE has also requested waiver of certain regulations of the Federal Energy Regulatory Commission (Commission) to the same extent that waiver of such regulations has been granted to other entities owning qualifying small power production facilities having a power production capacity between 30 and 80 MW including waivers pursuant to Parts 41, 45, 101, and 141 of the Commission's regulations. CRE has also requested blanket approval to issue securities and assume liabilities pursuant to Section 204 of the Federal Power Act and Part 34 of the Commission's regulations.

Comment date: June 20, 1997, in accordance with Standard Paragraph E at the end of this notice.

13. Pennsylvania Power & Light Co.

[Docket No. ER97–3049–000]

Take notice that on May 23, 1997, Pennsylvania Power & Light Company (PP&L) filed a Service Agreement dated May 19, 1997 with The Cleveland Electric Illuminating Company (Cleveland) under PP&L's FERC Electric Tariff, Original Volume No. 1. The Service Agreement adds Cleveland as an eligible customer under the Tariff.

PP&L requests an effective date of May 23, 1997, for the Service Agreement.

PP&L states that copies of this filing have been supplied to Cleveland and to the Pennsylvania Public Utility Commission.

Comment date: June 20, 1997, in accordance with Standard Paragraph E at the end of this notice.

14. Kentucky Utilities Company

[Docket No. ER97–3050–000]

Take notice that on May 23, 1997, Kentucky Utilities Company (KU) ,

tendered for filing service agreements between KU and New York State Electric & Gas and KU and the Ohio Edison Company and Pennsylvania Power Company (collectively the Ohio Edison System) under its Transmission Services (TS) Tariff and its Power Services (PS) Tariff.

Comment date: June 20, 1997, in accordance with Standard Paragraph E at the end of this notice.

15. Northeast Utilities Service Company

[Docket No. ER97–3051–000]

Take notice that on May 23, 1997, Northeast Utilities Service Company (NUSCO) , tendered for filing, a Service Agreement with Nissequogue Cogen Partners under the NU System Companies' Sale for Resale, Tariff No. 7.

NUSCO states that a copy of this filing has been mailed to the Nissequogue Cogen Partners.

NUSCO requests that the Service Agreement become effective April 25, 1997.

Comment date: June 20, 1997, in accordance with Standard Paragraph E at the end of this notice.

16. Northeast Utilities Service Company

[Docket No. ER97–3052–000]

Take notice that on May 23, 1997, Northeast Utilities Service Company (NUSCO) , tendered for filing, a Service Agreement with Nissequogue Cogen Partners under the NU System Companies' Sale for Resale, Tariff No. 7.

NUSCO states that a copy of this filing has been mailed to the Nissequogue Cogen Partners.

NUSCO requests that the Service Agreement become effective April 25, 1997.

Comment date: June 20, 1997, in accordance with Standard Paragraph E at the end of this notice.

17. Union Electric Company

[Docket No. ER97–3054–000]

Take notice that on May 23, 1997, Union Electric Company (UE) tendered for filing a Service Agreement for Non-Firm Point-to-Point Transmission Service between CMS Marketing, Services and Trading Company and UE. UE asserts that the purpose of the Agreement is to permit UE to provide transmission service to CMS pursuant to UE's Open Access Transmission Tariff filed in Docket No. OA96–50.

Comment date: June 23, 1997, in accordance with Standard Paragraph E at the end of this notice.

18. R. Hadler and Company, Inc.

[Docket No. ER97–3056–000]

Take notice that R. Hadler and Company, Inc. (Hadler) , on May 23,1997, tendered for filing an application of waivers and blanket approvals under various regulations of the Federal Energy Regulatory Commission (Commission) and for an order accepting its Rate Schedule FERC No. 1 to be effective immediately upon acceptance for filing of its application by the Commission, 60 days from and after the date of filing its application or from and after the date of the Commission's order accepting the Rate Schedule, whichever is earlier.

Hadler intends to act as a power marketer by engaging in market based sales of electricity and capacity.

Comment date: June 20, 1997, in accordance with Standard Paragraph E at the end of this notice.

19. Virginia Electric and Power Company

[Docket No. ER97–3058–000]

Take notice that on May 27, 1997 Virginia Electric and Power Company (Virginia Power) tendered for filing a Service Agreement for Non-Firm Point-to-Point Transmission Service between Pennsylvania Power & Light Co. and Virginia Power under the Open Access Transmission Tariff to Eligible Purchasers dated July 9, 1996. Under the tendered Service Agreement Virginia Power will provide non-firm point-to-point service to as agreed to by the parties under the rates, terms and conditions of the Open Access Transmission Tariff.

Copies of the filing were served upon the Virginia State Corporation Commission, the North Carolina Utilities Commission and the Pennsylvania Public Utility Commission.

Comment date: June 20, 1997, in accordance with Standard Paragraph E at the end of this notice.

20. Virginia Electric and Power Co.

[Docket No. ER97–3059–000]

Take notice that on May 27, 1997, Virginia Electric and Power Company (Virginia Power) tendered for filing a Service Agreement between Virginia Electric and Power Company and SCANA Energy Marketing, Inc. under the Power Sales Tariff to Eligible Purchasers dated May 27, 1994, as revised on December 31, 1996. Under the tendered Service Agreements Virginia Power agrees to provide services to SCANA Energy Marketing, Inc. under the rates, terms and conditions of the Power Sales Tariff as agreed by the parties pursuant to the terms of the applicable Service Schedules included in the Power Sales Tariff.

Copies of the filing were served upon the Virginia State Corporation Commission, and the North Carolina Utilities Commission.

Comment date: June 20, 1997, in accordance with Standard Paragraph E at the end of this notice.

21. PacifiCorp

[Docket No. ER97–3061–000]

Take notice that PacifiCorp on May 27, 1997, tendered for filing in accordance with 18 CFR Part 35 of the Commission's Rules and Regulations, Non-Firm Transmission Service Agreement with Koch Energy Trading, Inc. under PacifiCorp's FERC Electric Tariff, Original Volume No. 11.

Copies of this filing were supplied to the Washington Utilities and Transportation Commission and the Public Utility Commission of Oregon.

A copy of this filing may be obtained from PacifiCorp's Regulatory Administration Department's Bulletin Board System through a personal computer by calling (503) 464–6122 (9600 baud, 8 bits, no parity, 1 stop bit).

Comment date: June 20, 1997, in accordance with Standard Paragraph E at the end of this notice.

22. Wisconsin Electric Power Company

[Docket No. ER97–3062–000]

Take notice that Wisconsin Electric Power Company (Wisconsin Electric) on May 27, 1997, tendered for filing an Electric Service Agreement and a Non-Firm Transmission Service Agreement between itself and Northern Indiana Public Service Company and AYP Energy, Inc., respectively. The Electric Service Agreement provides for service to Northern Indiana Public Service Company under Wisconsin Electric's Coordination Sales Tariff. The Transmission Service Agreement allows AYP Energy, Inc. to receive non-firm transmission service under Wisconsin Electric's FERC Electric Tariff, Volume No. 7.

Wisconsin Electric requests an effective date of sixty days from date of filing. Copies of the filing have been served on Northern Indiana Public Service Company, AYP Energy, Inc., the Public Service Commission of Wisconsin and the Michigan Public Service Commission.

Comment date: June 20, 1997, in accordance with Standard Paragraph E at the end of this notice.

23. Central Hudson Gas and Electric Corporation

[Docket No. ER97–3063–000]

Take notice that Central Hudson Gas and Electric Corporation (CHG&E), on

May 27, 1997, tendered for filing pursuant to Section 35.12 of the Federal Energy Regulatory Commission's (Commission) Regulations in 18 CFR a Service Agreement between CHG&E and Sonat Power Marketing, L.P. The terms and conditions of service under this Agreement are made pursuant to CHG&E's FERC Electric Rate Schedule, Original Volume No. 1 (Power Sales Tariff) accepted by the Commission in Docket No. ER97–890–000. CHG&E also has requested waiver of the 60-day notice provision pursuant to 18 CFR Section 35.11.

A copy of this filing has been served on the Public Service Commission of the State of New York.

Comment date: June 20, 1997, in accordance with Standard Paragraph E at the end of this notice.

24. New York State Electric & Gas Corporation

[Docket No. ER97–3064–000]

Take notice that on May 27, 1997, New York State Electric & Gas Corporation (NYSEG), filed a Service Agreement between NYSEG and PacifiCorp Power Marketing, Inc., (Customer). This Service Agreement specifies that the Customer has agreed to the rates, terms and conditions of the NYSEG open access transmission tariff filed and effective on January 29, 1997 with revised sheets effective on February 7, 1997, in Docket No. OA96–195–000 and ER96–2438–000.

NYSEG requests waiver of the Commission's sixty-day notice requirements and an effective date of May 23, 1997 for the PacifiCorp Power Marketing, Inc., Service Agreement. NYSEG has served copies of the filing on The New York State Public Service Commission and on the Customer.

Comment date: June 20, 1997, in accordance with Standard Paragraph E at the end of this notice.

25. Florida Power Corporation

[Docket No. OA97–360–000]

Take notice that Florida Power Corporation (Florida Power), on May 8, 1997, tendered for filing a fully executed copy of Amendment No. 1 to Contract for Interchange Service between Florida Power and MidCon Power Services Corp. (Amendment No. 1).

On December 31, 1996, Florida Power tendered for filing a partially executed copy of Amendment No. 1. The sole purpose of this filing is to provide the Commission with a fully executed copy.

Comment date: June 23, 1997, in accordance with Standard Paragraph E at the end of this notice.

26. Florida Power Corporation

[Docket No. OA97–364–000]

Take notice that Florida Power Corporation (Florida Power), on May 8, 1997, tendered for filing a fully executed copy of Amendment No. 1 to Contract for Interchange Service between Florida Power and NorAm Energy Services, Inc. (Amendment No. 1).

On December 31, 1996, Florida Power tendered for filing a partially executed copy of Amendment No. 1. The sole purpose of this filing is to provide the Commission with a fully executed copy.

Comment date: June 23, 1997, in accordance with Standard Paragraph E at the end of this notice.

27. Florida Power Corporation

[Docket No. OA97–366–000]

Take notice that Florida Power Corporation (Florida Power), on May 8, 1997, tendered for filing a fully executed copy of Amendment No. 1 to Contract for Interchange Service between Florida Power and AES Power, Inc. (Amendment No. 1).

On December 31, 1996, Florida Power tendered for filing a partially executed copy of Amendment No. 1. The sole purpose of this filing is to provide the Commission with a fully executed copy.

Comment date: June 23, 1997, in accordance with Standard Paragraph E at the end of this notice.

28. Florida Power Corporation

[Docket No. OA97–368–000]

Take notice that Florida Power Corporation (Florida Power), on May 8, 1997, tendered for filing a fully executed copy of Amendment No. 1 to Contract for Interchange Service between Florida Power and Valero Power Services Company (Amendment No. 1).

On December 31, 1996, Florida Power tendered for filing a partially executed copy of Amendment No. 1. The sole purpose of this filing is to provide the Commission with a fully executed copy.

Comment date: June 23, 1997, in accordance with Standard Paragraph E at the end of this notice.

29. Florida Power Corporation

[Docket No. OA97–372–000]

Take notice that Florida Power Corporation (Florida Power), on May 8, 1997, tendered for filing a fully executed copy of Amendment No. 2 to Contract for Interchange Service between Florida Power and Utilities Commission, City of New Smyrna Beach, Florida (Amendment No. 2).

On December 31, 1996, Florida Power tendered for filing a partially executed copy of Amendment No. 2. The sole purpose of this filing is to provide the Commission with a fully executed copy.

Comment date: June 23, 1997, in accordance with Standard Paragraph E at the end of this notice.

30. Florida Power Corporation

[Docket No. OA97–374–000]

Take notice that Florida Power Corporation (Florida Power), on May 8, 1997, tendered for filing a fully executed copy of Amendment No. 2 to Contract for Interchange Service between Florida Power and Orlando Utilities Commission (Amendment No. 2).

On December 31, 1996, Florida Power tendered for filing a partially executed copy of Amendment No. 2. The sole purpose of this filing is to provide the Commission with a fully executed copy.

Comment date: June 23, 1997, in accordance with Standard Paragraph E at the end of this notice.

31. Florida Power Corporation

[Docket No. OA97–376–000]

Take notice that Florida Power Corporation (Florida Power), on May 8, 1997, tendered for filing a fully executed copy of Amendment No. 1 to Contract for Interchange Service between Florida Power and Enron Power Marketing, Inc. (Amendment No. 1).

On December 31, 1996, Florida Power tendered for filing a partially executed copy of Amendment No. 1. The sole purpose of this filing is to provide the Commission with a fully executed copy.

Comment date: June 23, 1997, in accordance with Standard Paragraph E at the end of this notice.

32. Florida Power Corporation

[Docket No. OA97–377–000]

Take notice that Florida Power Corporation (Florida Power), on May 8, 1997, tendered for filing a fully executed copy of Amendment No. 1 to Contract for Interchange Service between Florida Power and CNG Power Services Corporation (Amendment No. 1).

On December 31, 1996, Florida Power tendered for filing a partially executed copy of Amendment No. 1. The sole purpose of this filing is to provide the Commission with a fully executed copy.

Comment date: June 23, 1997, in accordance with Standard Paragraph E at the end of this notice.

33. Florida Power Corporation

[Docket No. OA97–379–000]

Take notice that Florida Power Corporation (Florida Power), on May 8,

1997, tendered for filing a fully executed copy of Amendment No. 1 to Contract for Interchange Service between Florida Power and Western Power Services, Inc. (Amendment No. 1).

On December 31, 1996, Florida Power tendered for filing a partially executed copy of Amendment No. 1. The sole purpose of this filing is to provide the Commission with a fully executed copy.

Comment date: June 23, 1997, in accordance with Standard Paragraph E at the end of this notice.

34. Florida Power Corporation

[Docket No. OA97–380–000]

Take notice that Florida Power Corporation (Florida Power), on May 8, 1997, tendered for filing a fully executed copy of Amendment No. 1 to Contract for Interchange Service between Florida Power and City of Starke (Amendment No. 1).

On December 31, 1996, Florida Power tendered for filing a partially executed copy of Amendment No. 1. The sole purpose of this filing is to provide the Commission with a fully executed copy.

Comment date: June 23, 1997, in accordance with Standard Paragraph E at the end of this notice.

35. Florida Power Corporation

[Docket No. OA97–385–000]

Take notice that Florida Power Corporation (Florida Power), on May 8, 1997, tendered for filing a fully executed copy of Amendment No. 1 to Contract for Interchange Service between Florida Power and Louis Dreyfus Electric Power, Inc. n/k/a Duke/Louis Dreyfus Marketing, L.L.C. (Amendment No. 1).

On December 31, 1996, Florida Power tendered for filing a partially executed copy of Amendment No. 1. The sole purpose of this filing is to provide the Commission with a fully executed copy.

Comment date: June 23, 1997, in accordance with Standard Paragraph E at the end of this notice.

36. Florida Power Corporation

[Docket No. OA97–388–000]

Take notice that Florida Power Corporation (Florida Power), on May 8, 1997, tendered for filing a fully executed copy of Amendment No. 2 to Contract for Interchange Service between Florida Power and Utility Board of the City of Key West (Amendment No. 2).

On December 31, 1996, Florida Power tendered for filing a partially executed copy of Amendment No. 2. The sole purpose of this filing is to provide the Commission with a fully executed copy.

Comment date: June 23, 1997, in accordance with Standard Paragraph E at the end of this notice.

37. Florida Power Corporation

[Docket No. OA97–390–000]

Take notice that Florida Power Corporation (Florida Power), on May 8, 1997, tendered for filing a fully executed copy of Amendment No. 3 to Contract for Interchange Service between Florida Power and Florida Power & Light Company (Amendment No. 3).

On December 31, 1996, Florida Power tendered for filing a partially executed copy of Amendment No. 3. The sole purpose of this filing is to provide the Commission with a fully executed copy.

Comment date: June 23, 1997, in accordance with Standard Paragraph E at the end of this notice.

38. Florida Power Corporation

[Docket No. OA97–393–000]

Take notice that Florida Power Corporation (Florida Power), on May 8, 1997, tendered for filing a fully executed copy of Amendment No. 1 to Contract for Interchange Service between Florida Power and Tampa Electric Company (Amendment No. 1).

On December 31, 1996, Florida Power tendered for filing a partially executed copy of Amendment No. 1. The sole purpose of this filing is to provide the Commission with a fully executed copy.

Comment date: June 23, 1997, in accordance with Standard Paragraph E at the end of this notice.

39. Commonwealth Edison Company

[Docket No. OA97–569–000]

Take notice that on June 2, 1997 Commonwealth Edison Company (ComEd) amended the March 26, 1997 filing and submits for filing a new form of service agreement, Short-Term Firm Service Agreement (Service Agreement), under Docket No. OA96–569–000.

ComEd continues to request an effective date of April 1, 1997, for the reasons set out in the original transmittal letter, dated March 26, 1997. Copies of this filing were served upon all OATT customers and the Illinois Commerce Commission.

Comment date: June 23, 1997, in accordance with Standard Paragraph E at the end of this notice.

Standard Paragraph

E. Any person desiring to be heard or to protest said filing should file a motion to intervene or protest with the Federal Energy Regulatory Commission, 888 First Street, N.E., Washington, D.C. 20426, in accordance with Rules 211 and 214 of the Commission's Rules of Practice and Procedure (18 CFR 385.211 and 18 CFR 385.214). All such motions or protests should be filed on or before the comment date. Protests will be considered by the Commission in determining the appropriate action to be taken, but will not serve to make protestants parties to the proceeding. Any person wishing to become a party must file a motion to intervene. Copies of this filing are on file with the Commission and are available for public inspection.

Lois D. Cashell,

Secretary.

[FR Doc. 97–15653 Filed 6–13–97; 8:45 am]

BILLING CODE 6717–01–P

ENVIRONMENTAL PROTECTION AGENCY

[FRL–5842–4]

Retrofit/Rebuild Requirements for 1993 and Earlier Model Year Urban Buses; Public Review of a Notification of Intent To Certify Equipment

AGENCY: Environmental Protection Agency.

ACTION: Notice of Agency receipt of a notification of intent to certify equipment and initiation of comment period.

SUMMARY: The Agency has received a notification of intent to certify urban bus retrofit/rebuild equipment pursuant to 40 CFR Part 85, Subpart O from the Engelhard Corporation (Engelhard). Pursuant to § 85.1407(a)(7), today's **Federal Register** notice summarizes the notification below, announces that the notification is available for public review and comment, and initiates a 45-day period during which comments can be submitted. The Agency will review this notification of intent to certify, as well as comments received, to determine whether the equipment described in the notification of intent to certify should be certified. If certified, the equipment can be used by urban bus operators to reduce the particulate matter of urban bus engines.

The Engelhard notification of intent to certify, as well as other materials specifically relevant to it, is contained in category XVII–A of Public Docket A–93–42, entitled ''Certification of Urban Bus Retrofit/Rebuild Equipment.'' This docket is at the address below.

Today's notice initiates a 45-day period during which the Agency will accept written comments relevant to whether or not the equipment included in this notification of intent to certify

should be certified. Comments should be provided in writing to Public Docket A–93–42, Category XVII–A, at the address below. An identical copy should be submitted to Anthony Erb, also at the address below.

DATES: Comments must be submitted on or before July 31, 1997.

ADDRESSES: Submit separate copies of comments to the two following addresses:

1. U.S. Environmental Protection Agency, Public Docket A–93–42 (Category VIII–A), Room M–1500, 401 M Street SW., Washington, DC 20460.
2. Anthony Erb, Engine Compliance and Programs Group, Engine Programs & Compliance Division (6403J), 401 M Street SW., Washington, DC 20460.

Docket items may be inspected from 8:00 a.m. until 5:30 p.m., Monday through Friday. As provided in 40 CFR Part 2, a reasonable fee may be charged by the Agency for copying docket materials.

FOR FURTHER INFORMATION CONTACT: Anthony Erb, Engine Programs & Compliance Division (6403J), U.S. Environmental Protection Agency, 401 M Street SW., Washington, DC 20460. Telephone: (202) 233–9259.

SUPPLEMENTARY INFORMATION:

I. Background

On April 21, 1993, the Agency published final Retrofit/Rebuild Requirements for 1993 and Earlier model Year Urban Buses (58 FR 21359). The retrofit/rebuild program is intended to reduce the ambient levels of particulate matter (PM) in urban areas and is limited to 1993 and earlier model year (MY) urban buses operating in metropolitan areas with 1980 populations of 750,000 or more, whose engines are rebuilt or replaced after January 1, 1995. Operators of the affected buses are required to choose between two compliance programs: Program 1 sets particulate matter emissions requirements for each urban bus engine in an operator's fleet which is rebuilt or replaced; Program 2 is a fleet averaging program that establishes specific annual target levels for average PM emissions from urban buses in an operator's fleet.

Certification of retrofit/rebuild equipment is a key element of the retrofit/rebuild. To show compliance under either of the compliance programs, operators of the affected buses must use equipment that has been certified by the Agency. Emissions requirements under either of the two compliance programs depend on the availability of certified retrofit/rebuild equipment for each engine model. To be used for Program 1, equipment must be certified as meeting a 0.10 g/bhp-hr PM standard or as achieving a 25 percent reduction in PM. Equipment used for Program 2 must be certified as providing some level of PM reduction that would in turn be claimed by urban bus operators when calculating their average fleet PM levels attained under the program. For Program 1, information on life cycle costs must be submitted in the notification of intent to certify in order for certification of the equipment to initiate (or trigger) program requirements. To trigger program requirements, the certifier must guarantee that the equipment will be available to all affected operators for a life cycle cost of $7,940 or less at the 0.10 g/bhp-hr PM level, or for a life cycle cost of $2,000 or less for the 25 percent or greater reduction in PM. Both of these values are based on 1992 dollars.

II. Notification of Intent To Certify

By a notification of intent to certify signed November 18, 1996, Engelhard has applied for certification of equipment applicable to all Cummins L–10 engines that were originally manufactured prior to and including 1993.

The notification of intent to certify states that the candidate equipment will reduce PM emissions 25 percent or more on petroleum-fueled diesel engines that have been rebuilt to Cummins specifications. Pricing information has been submitted with the notification, along with a guarantee that the equipment will be offered to all affected operators for less than the incremental life cycle cost ceiling. Therefore, this equipment may trigger program requirements for the 25% reduction standard. If certified as a trigger of this standard, urban bus operators will be required to use this retrofit/rebuild equipment or other equipment certified to provide a PM reduction as discussed below.

The equipment being certified is a ''catalytic Converter Muffler'' or CMX™, that is a muffler containing an oxidation catalyst. The CMX is intended to replace the standard muffler previously installed in the engine eshaust system. The CMX is intended to be maintenance free, requiring no service for the full in-use compliance perior. The engine fuel to be used with this equipment is standard diesel fuel with a maximum sulfur content of 0.05 wt.% sulfur.

Engelhard has requested approval for all Cummins L–10 engines manufactured prior to and including 1993. Engelhard presents exhaust emission data from testing a 1992 280hp Cummins L–10 EC (electronic control) engine. Engelhard states that the engine selected can be considered worst case for an after treatment device because of the extremely low baseline emissions. Engelhard states that the low PM emissions provide less for the catalyst to work on, thus making it harder for the catalyst to achieve the 25% reduction. EPA notes that this interpretation of worst case in not in accordance with the regulation which states that EPA will allow results to be extrapolated to engine types and model years known to have engine out PM levels equal to or less than that of the test engine. In the case at hand, the test engine has a pre-rebuild PM emission level of 0.25 g/bhp-hr. The PM levels listed in the table at § 85.1403(c)(1)(iii)(A) for all Cummins models (other than the L–10 EC) are higher than the stated level for the test engine. Under the regulations, a test engine can serve only as a worst case for engines that have an original certification level that is equal to or less than the emission level of the test engine. Based on the regulations and worst case definition in the regulations, at this time EPA believes that this certification may only be applicable to the 1992–1993 L–10 EC model, as this is the only model that fulfills the worst-case criteria. EPA welcomes comments and supporting information relative to this issue.

Engelhard has stated that it may supply additional testing data on another engine that may meet the worst case criteria in the future which may alter the applicability of this application. EPA will consider such information and provide the opportunity for public comment at that time. However, pending receipt of that additional data, EPA welcomes comments based on the information presented herein.

The test engine was a new 1992 280 hp Cummins L–10 EC (electronic control) engine obtained from the National Institute for Petroleum and Energy Research. The engine had approximately 250 hours of break in time before testing. Two tests were conducted, one test was performed on the engine without the CMX and a second test was performed on the same engine after retrofit with the CMX. The test data show a PM level of 0.105 g/bhp-hr for the base engine without the CMX, and a PM level of 0.073 g/bhp-hr with the candidate equipment installed. This represents a PM reduction of 30% with candidate equipment installed. The test data also show that hydrocarbon (HC), carbon monoxide (CO), and oxides of nitrogen (NO_X) are

less than applicable standards. Fuel consumption is not affected when the candidate equipment is installed based on comparison to the test results. Engelhard presents smoke emission measurements for the engine demonstrating compliance with applicable standards.

TABLE A.—EXHAUST EMISSIONS SUMMARY

[G/BHP–HR]

Gaseous and particulate test	Standards	1992 Cummins L–10 EC baseline	1992 Cummins L–10 EC with CMX
HC	1.3	0.27	0.12
CO	15.5	1.46	0.74
NO_X	5.0	5.0	4.88
PM	0.25	0.105	[1] 0.073
BSFC[2]		0.373	0.368
Smoke Test.			
ACCEL	20 (percent)	3.1 (percent)	3.9 (percent)
LUG	15 (percent)	1.9 (percent)	1.2 (percent)
PEAK	50 (percent)	6.0 (percent)	6.6 (percent)

[1] The PM level listed in Table A differs from the level listed in the notification of intent to certify as the hot start test cited in the original notification was not valid. However, the PM level listed in Table B is based on a valid hot start test (H–2) which was conducted in conjunction with the cold start test.

[2] Brake Specific Fuel Consumption (BSFC) is measured in units of lb/bhp-hr.

Engelhard indicates that the CMX muffler kit equipment will have an incremental maximum cost (in 1992 dollars) to the bus operator of $1,790.00 and will require six hours of installation time @ $35.00 per hours. Thus, the total incremental cost according to Engelhard will be $2,000.00 (1992 dollars). Engelhard states that there will be no incremental fuel cost, or maintenance cost compared to the currently available standard rebuild. Therefore, the candidate equipment will be offered to all affected operators for a maximum life cycle cost of $2,000 (1992 dollars). Currently, no equipment is certified for the 1992 Cummins L–10 EC model engine, accordingly, if certified, this equipment would trigger the 25 percent reduction standard.

If the Agency certifies the candidate Engelhard equipment operators will be affected as follows. Under Program 1, this certification would trigger requirements for all rebuilds of applicable L–10 EC engines performed six months following the effective date of certification requiring the use of this equipment or other equipment certified in the meantime to provide at least a 25 percent reduction. With regard to the L–10 models included in this notification on intent to certify by Engelhard, equipment has already been certified demonstrating the 25% reduction.

The requirement to use certified equipment demonstrating at least a 25% reduction in PM will continue for the applicable engines until such time as equipment is certified to trigger the 0.10 g/bhp-hr emission standard for less than a life cycle cost of $7,940 (in 1992 dollars). If the Agency certifies the candidate Engelhard equipment, operators who choose to comply with Program 2 and install this equipment will use the PM emission level(s) established during the certification review process in their calculations for target or fleet level as specified in the program regulations. Emission levels proposed by Engelhard are provided in Table B. However, as noted above, EPA at this time believes that this certification would only apply to the 1992 and 1993 L–10 EC models.

TABLE B.—CERTIFICATION LEVELS

Cummins engine model	Model year	Baseline PM levels	PM emissions with CMX
L–10	1985–1987	0.65	0.50
L–10	1988–1989	0.55	0.41
L–10	1990–1991	0.46	0.34
L–10 EC	1992–1993	0.25	0.19

At a minimum, EPA expects to evaluate this notification of intent to certify, and other materials submitted as applicable, to determine whether there is adequate demonstration of compliance with: (1) the certification requirements of § 85.1406, including whether the testing accurately proves the claimed emission reduction or emission levels; and, (2) the requirements of § 85.1407 for a notification of intent to certify, including whether the data provided by Engelhard complies with the life cycle cost requirements.

The Agency requests that those commenting also consider these regulatory requirements, plus provide comments on any experience or knowledge concerning: (a) Problems with installing, maintaining, and/or using the candidate equipment on applicable engines; and, (b) Whether the equipment is compatible with affected vehicles.

The date of this notice initiates a 45-day period during which the Agency will accept written comments relevant to whether or not the equipment described in the Engelhard notification of intent to certify should be certified pursuant to the urban bus retrofit/rebuild regulations. Interested parties

are encouraged to review the notification of intent to certify and provide comment during the 45-day period. Please send separate copies of your comments to each of the above two addresses.

The Agency will review this notification of intent to certify, along with comments received from interested parties, and attempt to resolve or clarify issues as necessary. During the review process, the Agency may add additional documents to the docket as a result of the review process. These documents will also be available for public review and comment within the 45-day period.

Mary D. Nichols,

Assistant Administrator for Air and Radiation.

[FR Doc. 97–15729 Filed 6–13–97; 8:45 am]

BILLING CODE 6560–50–P

ENVIRONMENTAL PROTECTION AGENCY

[FRL–5842–5]

Retrofit/Rebuild Requirements for 1993 and Earlier Model Year Urban Buses; Public Review of a Notification of Intent To Certify Equipment and Public Review of a Request To Amend a Current Certification

AGENCY: Environmental Protection Agency.

ACTION: Notice of agency receipt of a notification of intent to certify equipment and initiation of comment period. Notice of Agency receipt of a request to amend a current certification.

SUMMARY: The Agency has received a notification of intent to certify urban bus retrofit/rebuild equipment for 4-stroke petroleum fueled diesel engines pursuant to 40 CFR Part 85, Subpart O from Engine Control Systems Ltd. (ECS). Pursuant to § 85.1407(a)(7), today's **Federal Register** notice summarizes the notification below, announces that the notification is available for public review and comment, and initiates a 45-day period during which comments can be submitted. The Agency will review this notification of intent to certify, as well as comments received, to determine whether the equipment should be certified.

This action is also notifying the public that ECS proposes to amend its current two-stroke engine certification. On January 6, 1997 (62 FR 746) EPA approved certification of the ECS retrofit kit which demonstrated a 25% reduction in PM for 1979 to 1993 DDC 2-stroke engines. On February 11, 1997, ECS requested that this certification be modified to also include 8V71N engines for model years 1973 to 1984.

Today's notice initiates a 45-day period during which the Agency will accept written comments relevant to whether or not the equipment included in this notification of intent to certify for 4-stroke engines should be certified and whether the Agency should approve the ECS request to amend the previously approved 2-stroke application to include the 8V71N model. Comments relevant to the 4-stroke notification should be provided in writing to Public Docket A–93–42, Category XVI–A, at the address below. Comments relevant to the 2-stroke amendment should be provided in writing to Public Docket A–93–42, Category XIV–A, at the address below. An identical copy of each comment should be submitted to Anthony Erb, also at the address below.

DATES: Comments must be submitted on or before July 31, 1997.

ADDRESSES: Submit separate copies of comments to the two following addresses:

1. U.S. Environmental Protection Agency, Public Docket A–93–42 (Category XIV–A or XVI–A), Room M–1500, 401 M Street SW., Washington, DC 20460.

2. Anthony Erb, Engine Compliance and Programs Group, Engine Programs & Compliance Division (6403J), 401 ''M'' Street SW., Washington, DC 20460.

Docket items may be inspected from 8:00 a.m. until 5:30 p.m., Monday through Friday. As provided in 40 CFR Part 2, a reasonable fee may be charged by the Agency for copying docket materials.

FOR FURTHER INFORMATION CONTACT: Anthony Erb, Engine Programs & Compliance Division (6403J), U.S. Environmental Protection Agency, 401 M Street SW., Washington, DC 20460. Telephone: (202) 233–9259.

SUPPLEMENTARY INFORMATION:

I. Background

On April 21, 1993, the Agency published final Retrofit/Rebuild Requirements for 1993 and Earlier Year Urban Buses (58 FR 21359). The retrofit/rebuild program is intended to reduce the ambient levels of particulate matter (PM) in urban areas and is limited to 1993 and earlier year (MY) urban buses operating in metropolitan areas with 1980 populations of 750,000 or more, whose engines are rebuilt or replaced after January 1, 1995. Operators of the affected buses are required to choose between two compliance programs: Program 1 sets particulate matter emissions requirements for each urban bus engine in an operator's fleet which is rebuilt or replaced; Program 2 is a fleet averaging program that establishes specific annual target levels for average PM emissions from urban buses in an operator's fleet.

Certification of retrofit/rebuild equipment is a key element of the retrofit/rebuild program. To show compliance under either of the compliance programs, operators of the affected buses must use equipment that has been certified by the Agency. Emissions requirements under either of the two compliance programs depend on the availability of certified retrofit/rebuild equipment for each engine. To be used for Program 1, equipment must be certified as achieving at least a 25 percent reduction in PM. Equipment used for Program 2 must be certified as providing some level of PM reduction that would in turn be claimed by urban bus operators when calculating their average fleet PM levels attained under the program. For Program 1, information on life cycle costs must be submitted in the notification of intent to certify in order for certification of the equipment to initiate (or trigger) program requirements. To trigger program requirements, the certifier must guarantee that the equipment will be available to all affected operators for a life cycle cost of $7,940 or less at the 0.10 g/bhp-hr PM level, or for a life cycle cost of $2,000 or less for the 25 percent or greater reduction in PM. Both of these values are based on 1992 dollars.

The equipment for which certification is pending for the 4-stroke engine is a catalytic converter muffler which will take the place of the standard muffler in the exhaust system. ECS has requested that this equipment notification be considered for certification for use under Program 2 only. Equipment certified for Program 2 must provide some level of PM reduction that can in turn be claimed by urban bus operators when calculating their average fleet PM levels attained under the program. Certification of this equipment will not trigger or comply with any requirements under Program 1.

With regard to the request from ECS to amend the existing certification for 2-stroke engines, ECS is requesting that the certification be amended to include 8V71N model engines originally produced in model years 1973 through 1984. On August 8,1996 (61 FR 41409), EPA published a notice that it had received a notification of intent to certify equipment providing a 25% reduction in PM for specific DDC model engines. The equipment for which certification was requested was an oxidation converter muffler which was

a direct replacement for the existing muffler. The equipment was stated to provide a 25% reduction in PM on the models listed. On January 6, 1997 (62 FR 746) EPA approved the certification of this equipment to provide a 25% reduction in PM for operators utilizing Program 1 or Program 2 for specified models. On February 11, 1997, ECS requested that the certification be amended to include the DDC 8V71N engines.

II. Notification of Intent To Certify

By a notification of intent to certify signed October 30, 1996, ECS has applied for certification of equipment applicable to all Cummins L–10 engines and all other 4-stroke engines that were originally manufactured prior to and including 1993. The equipment being certified is a converter muffler (CM) containing an oxidation catalyst. The CM is stated to be a direct replacement for the standard muffler installed on the engine exhaust system. The ECS specified PM certification levels are provided in Table B.

The notification of intent to certify states that the candidate equipment will reduce PM emissions by 18 percent or more, on any 1985 to 1993 4-stroke petroleum-fueled diesel engines which either: (a) Have not been rebuilt and are not in need of a rebuild; or (b) have been rebuilt to its original configuration; or, (c) have been rebuilt with the rebuild kit manufactured by the Cummins Engine Company and certified under the urban bus retrofit program (60 FR 64046, December 13, 1995).

This equipment cannot be used in compliance with Program 1 because the emission data does not demonstrate at least a 25% reduction in PM. If certified, the use of this equipment by urban bus operators will be allowed for operators who have chosen to comply using Program 2 only.

The CM is stated to be maintenance free. The engine fuel to be used with this equipment is standard diesel fuel with a maximum sulfur content of 0.05 wt.% sulfur.

ECS presents exhaust emission data from testing performed on a 1987 Cummins LTA10B 240 horsepower urban bus engine. The engine was rebuilt to its original configuration and run for 125 hours prior to testing. Testing was performed at the Southwest Research Institute in San Antonio, Texas. Two tests were conducted. The first test was performed on the rebuilt engine without the CM, and a second test was performed on the same engine after retrofit with the CM. The test data show a PM level of 0.404 g/bhp-hr for the base rebuilt engine without the CM and a PM level of 0.327 g/bhp-hr with the CM installed (a 19% PM reduction). The test data also show that hydrocarbon (HC), carbon monoxide (CO), and oxides of nitrogen (NO_X) are less than applicable standards. Fuel consumption with the candidate equipment installed was 0.403 lb/BHP-hr compared to 0.397 lb/bhp-hr for the baseline test. The exhaust restriction during the baseline test was 2.36 inches of Hg compared to 2.47 inches of Hg for the test after retrofit with the CM. ECS presents smoke emission measurements for the engine demonstrating compliance with applicable standards.

ECS contends that these tests are appropriate to allow for certification on engines in category (c) mentioned above, that have been rebuilt using the certified Cummins rebuild kit, as the tests use ''worst case'' engines, as compared to the engines rebuilt with the Cummins kit. ECS also contends that these tests are appropriate to allow for certification on engines under category (a). The engines under category (a) above will not have been rebuilt and are not in need of a rebuild at the time the candidate equipment is installed. As such, these engines are presumed to emit PM at the level of the original engine configuration. Therefore, these engines are in essence the same as the tested engine, which was rebuilt to the original engine configuration. ECS plans to review the oil consumption for each engine as a primary means of determining which engines will be acceptable under this category. Engines which exceed a specified limit will not be allowed to undergo retrofit without rebuild. Test results are provided in Table A.

TABLE A.—EXHAUST EMISSIONS SUMMARY

	g/bhp-hr		
	1988 Standards	1987 Cummins LTA10B baseline	1987 Cummins LTA10B with converter muffler
Gaseous and Particulate Test:			
HC	1.3	0.378	0.010
CO	15.5	3.374	2.391
NO_X	10.7	5.869	5.719
PM	0.60	0.404	0.327
BSFC [1]		0.397	0.403
Smoke Test:	Standards	Percent Opacity	
ACCEL	20 (percent)	9.7 (percent)	12.2 (percent)
LUG	15 (percent)	1.2 (percent)	1.5 (percent)
PEAK	50 (percent)	21.1 (percent)	27.3 (percent)

[1] Brake Specific Fuel Consumption (BSFC) is measured in units of lb/bhp-hr.

If the Agency certifies the candidate ECS equipment, operators who choose to comply with Program 2 who install this equipment, will use the PM emission level(s) established during the certification review process in their calculations of target or fleet level as specified in the regulations. Table B provides the PM levels proposed by ECS for this equipment.

TABLE B.—ECS RETROFIT/REBUILD CERTIFICATION LEVELS FOR CUMMINS ENGINES [1]

Engine family	Control parts list (CPL)	Manufacture dates	New Engine PM level	Retrofit PM level with CM	Retrofit PM level with CM & Cummins kit
343B	780	11/20/85 to 12/31/87	0.58	0.48	0.28
343B	0781	11/20/85 to 12/31/87	0.59	0.48	0.28
343C	0774	11/20/85 to 12/31/89	0.46	0.38	0.28
343C	0777	11/20/85 to 12/31/89	0.61	0.50	0.28
343C	0996	12/04/87 to 08/19/88	0.61	0.50	0.28
343C	1226	07/26/88 to 12/31/90	0.50	0.41	0.28
343F	1226	07/12/90 to 08/26/92	0.45	0.37	0.28
343F	1441	12/18/90 to 12/31/92	0.46	0.38	0.28
343F	1622	04/24/92 to 12/31/92	0.46	0.38	0.28
343F	1624	04/24/92 to 12/31/92	0.45	0.37	0.28
Other 4-stroke engines		1985 to 1993		18 % reduction from original PM levels	N/A

[1] The New Engine PM certification levels are based on the certification level or the average test audit result for each engine family. It is noted that for engine family 343F, although the PM standard for 1991 and 1992 was 0.25 g/bhp-hr and the NOx standard was 5.0 g/bhp-hr, Cummins certified the 1226, 1441, 1622, and 1624 CPLs to a Federal Emission Limit (FEL) of 0.49 g/bhp-hr PM and 5.6 g/bhp-hr NOx under the averaging, banking and trading program.

III. Request To Amend Previous Certification

With regard to amending the 2-stroke certification, in the original notification, ECS performed testing on a 1987 DDC 6VN71 model engine. This test engine would qualify as a worst case engine when compared to the 8V71N engine and, as such, the results from testing this engine could be extrapolated to the 8V71N models is in question. All other factors involved in the certification including warranties, instructions, costs and maintenance remain the same. ECS states that it believes that the catalyst utilized in the earlier certification will adequately reduce PM from the 8V71N engines by at least 25%. ECS has cited the fact that the displacement of the 8V71N engine family is very similar to the 6V92 for which the equipment is already certified. ECS also states that the 8V71N engine being naturally aspirated will operate with characteristically hotter exhaust temperatures than a 6V92TA which should enhance PM reduction. ECS has requested to amend its certification to include the levels provided in Table C.

TABLE C.—ECS RETROFIT/REBUILD CERTIFICATION LEVELS FOR 8V71N MODEL

Engine model	Model years	PM level with OCM	Code/ Family
8V71N	1973–1984	0.38	All.

It is noted that the ECS proposal to amend the previous certification will not trigger any new requirements for operators because equipment providing a 25% PM reduction has already been certified for the above model and years. The PM level in the triggering certification is identical to the PM level specified above.

At a minimum, EPA expects to evaluate the notification of intent to certify for the 4-stroke engines, and the request to amend the certification for the 2-stroke engines and other materials submitted as applicable, to determine whether there is adequate demonstration of compliance with: (1) The certification requirements of § 85.1406, including whether the testing accurately proves the claimed emission reduction or emission levels; and, (2) the requirements of § 85.1407 for a notification of intent to certify. With regard to the amendment to the 2-stroke certification, comments should be directed to the addition of the 8V71N engine only as this notification is not meant to re-open the comment period for the original notice of intention to certify (NIC).

The Agency requests that those commenting also consider these regulatory requirements, plus provide comments on any experience or knowledge concerning: (a) problems with installing, maintaining, and/or using the candidate equipment on applicable engines; and, (b) whether the equipment is compatible with affected vehicles.

The date of this notice initiates a 45-day period during which the Agency will accept written comments relevant to whether or not the equipment described in the ECS notification of intent to certify for 4-stroke engine should be certified pursuant to the urban bus retrofit/rebuild regulations, and on the issue of the request to amend the prior 2-stroke engine certification. Interested parties are encouraged to review the notification of intent to certify and provide comment during the 45-day period. Please send separate copies of your comments to each of the above two addresses.

The Agency will review this notification of intent to certify and the request to revise the previous certification, along with comments received from interested parties, and attempt to resolve or clarify issues as necessary. During the review process, the Agency may add additional documents to the docket as a result of the review process. These documents will also be available for public review and comment within the 45-day period.

Dated: June 10, 1997.

Mary D. Nichols,

Assistant Administrator for Air and Radiation.

[FR Doc. 97–15730 Filed 6–13–97; 8:45 am]

BILLING CODE 6560–50–P

ENVIRONMENTAL PROTECTION AGENCY

[OPP–00486; FRL–5725–9]

Pesticide Program Dialogue Committee; Open Meeting

AGENCY: Environmental Protection Agency (EPA).

ACTION: Notice.

SUMMARY: As required by section 10(a)(2) of the Federal Advisory Committee Act [Public Law 92–463], EPA's Office of Pesticide Programs

(OPP) is giving notice of a public meeting of the Pesticide Program Dialogue Committee (PPDC).

DATES: The meeting will be held on Tuesday, June 24, 1997 from 1:30 p.m. to 5:15 p.m. and Wednesday, June 25, 2997 from 8:30 a.m. to 12:00 p.m. Workgroup meetings (as described under ''Supplementary Information'') will be held on Tuesday, June 24, from 8:30 a.m. to 12:30 p.m.

ADDRESSES: The meeting will be held at the Ramada Plaza Hotel, 901 N. Fairfax Street, (Old Town) Alexandria, Virginia in the Lee Ballroom.

FOR FURTHER INFORMATION CONTACT: By mail: Margie Fehrenbach or Kathleen Martin, Office of Pesticide Programs (7501C), Environmental Protection Agency, 401 M St., SW., Washington, DC 20460. Office location and telephone number: Rm. 1119, Crystal Mall #2, 1921 Jefferson Davis Highway, Arlington, VA, (703) 305–7090; e-mail: fehrenbach.margie@epamail.epa.gov.

SUPPLEMENTARY INFORMATION: The PPDC is composed of a balanced group of participants from the following sectors: pesticide industry and user groups; federal agencies and state governments; consumer and environmental/public interest groups, including representatives from the general public; academia; the public health community; and, congressional staff. The Committee was formed to foster communication and understanding among the parties represented on the Committee and with OPP. The Committee also provides advice and guidance to OPP regarding pesticide regulatory, policy, and implementation issues.

PPDC meetings are open to the public. Outside statements by observers are welcome. Oral statements will be limited to five minutes, and it is preferred that only one person present the statement. Any person who wishes to file a written statement can do so before or after a Committee meeting. These statements will become part of the permanent file and will be provided to the Committee members for their information. Materials will be available for public review at the following address: U.S. Environmental Protection Agency, Rm. 1128, Crystal Mall #2, 1921 Jefferson Davis Highway, Arlington, VA 22202 (703) 305–5805.

Topics to be discussed at the June meeting are: Reports from PPDC Work Groups on new health standards; safer (reduced risk) pesticides; labelling; Government Performance and Results Act (GPRA) measurement indicators; minor uses/section 18's; right-to-know/communications; and, ecological standards/program. Other topics to be discussed are: tolerance reassessment; and a review of Scientific Advisory Panel (SAP) issues with the Panel Chairperson.

List of Subjects

Environmental protection.

Dated: June 8, 1997.

Daniel M. Barolo,

Director, Office of Pesticide Programs.

[FR Doc. 97–15726 Filed 6–13–97; 8:45 am]

BILLING CODE 6560–50–F

ENVIRONMENTAL PROTECTION AGENCY

[FRL–5842–1]

Risk Assessment and Risk Management Commission

Pursuant to the Federal Advisory Committee Act, Public Law 92–463, notice is hereby given that the Risk Assessment and Risk Management Commission, established as an Advisory Committee under section 303 of the Clean Air Act Amendments of 1990, will hold a public meeting on August 8, 1997 at the Kimball Conference Room, 1400 16th Street, NW., Washington, DC 20036. The meeting will start at 10:00 a.m. and adjourn at 4:30 p.m.

The meeting will be a symposium with two goals: (1) To define a public health approach to environmental protection, including advantages, disadvantages, and barriers to implementation; (2) to examine the potential for an ''environmental health improvement'' market for investments in public health projects for a narrowly defined set of facilities already meeting current air standards. The ''environmental health improvement'' market will be discussed by using the example of EPA's most recently proposed changes to the air standards for particulates and ozone.

Due to limited seating, attendees should notify the Commission's office in advance prior to August 1, 1997, by calling 202–233–9537 or send a fax to 202–233–9540. Please include your phone number and fax number.

For a copy of Volume one or Volume two of the Commission's final report, please fax your request to 202–233–9540, mail your request to the Commission on Risk Assessment and Risk Management, 529 14th Street, NW., Room 420, Washington, DC 20045, or obtain via the Internet at http://www.riskworld.com. Be sure to indicate your complete mailing address and a phone number where you can be reached.

Dated: June 5, 1997.

Gail Charnley,

Executive Director, Commission on Risk Assessment and Risk Management.

[FR Doc. 97–15728 Filed 6–13–97; 8:45 am]

BILLING CODE 6560–50–M

ENVIRONMENTAL PROTECTION AGENCY

[FRL–5842–2]

Science Advisory Board; Notice of Public Teleconference Meetings

Pursuant to the Federal Advisory Committee Act, Public Law 92–463, notice is hereby given that the Advisory Council on Clean Air Compliance Analysis (ACCACA, or the ''Council'') of the Science Advisory Board (SAB) will conduct a public teleconference on the date and times specified below. This meeting is open to the public, however, the number of available phone lines is limited. All times noted are Eastern Time. Documents that are the subject of SAB reviews are normally available from the originating EPA office and are *not* available from the SAB office (see information provided below).

Advisory Council on Clean Air Compliance Analysis

The Advisory Council on Clean Air Compliance Analysis (ACCACA, or the ''Council'') of the Science Advisory Board (SAB) plans to hold a public teleconference meeting on Monday, June 30, 1997, from 11:00 am to 2:00 pm. The topics to be discussed are closure on select edits to the Clean Air Act (CAA) section 812 Retrospective Study and a strategic plan and continued discussions on emissions modeling on the Prospective Study of costs and benefits. The Council expects to receive select draft text edits to the Clean Air Act (CAA) section 812 Retrospective Study in June 1997. The review of these select draft edits to the Retrospective Study document will occupy only a portion of the time available for the teleconference. Most of the remaining time will be spent discussing the Agency's strategic vision, plan and approach to develop the CAA section 812 Prospective Study of costs and benefits. The Council will continue its discussions with the Agency staff of the emissions estimates, modeling assumptions, methodology, results and documentation for the Prospective Study that were the subject of its March and May teleconferences.

This public teleconference is a follow-up to earlier Council face-to-face discussions held on November 7 and 8, 1996, concerning the 1990 Clean Air Act

(CAA) section 812 Retrospective and Prospective Studies (see 61 FR 54196, Thursday, October 17, 1996), as well as public teleconferences held in March 14, 19 and 26, and May 15, 1997 (See 62 FR 10045, Wednesday, March 5, 1997 and 62 FR 19320, Monday, April 21, 1997, for further information). Please note that the previously advertised teleconferences of March 21 and May 16, 1997 were cancelled. Specifically, the March 21, 1997 teleconference was cancelled to give the Agency staff time to prepare select text edits to the Retrospective Study, and have discussion on them at the March 26,1997 public teleconference. The May 16, 1997 teleconference was cancelled so that the Agency staff would have time to prepare a strategic vision and plan to present and discuss with the Council at its June 30, 1997 public teleconference.

The latest revised draft Retrospective Study document, dated April 1997 is not available from the Science Advisory Board, but may be obtained by contacting Ms. Michelle Olawuyi (see below for ordering information). The Prospective Study emissions estimates draft documents, as well as a brief paper on the strategic plan are available from Mr. James DeMocker, Office of Air and Radiation (see below for ordering information).

With regard to closure on the Retrospective Study Report to Congress, the Council identified a number of Retrospective Study issue areas, some of which are listed here as follows: valuation of bronchitis and heart disease; presentation of baseline (''but for'' issues, that is, but for the presence of the 1990 Clean Air Act), choice of study for estimating PM-related mortality (includes physical effects); costs (operations and maintenance costs, cost-of-clean, etc.); ecological effects; valuing changes in intelligence quotient (IQ) issues; presentation of life years lost calculations (life years remaining issue); methodological effects; morbidity effects by age; and research needs. While most of these issues are settled, it is anticipated that the closure discussions will touch on some of these issues. Other related issues may be discussed as time permits.

To discuss technical aspects or obtain copies of the draft EPA documents pertaining to the CAA section 812 Retrospective Study select draft text edits as well as the Prospective Study strategic vision and plan, as well as emissions estimates, please contact Mr. James DeMocker, Office of Policy Analysis and Review (OAR) (MC 6103), US Environmental Protection Agency, 401 M Street, SW, Washington, DC 20460. Tel. (202) 260–8980; FAX (202) 260–9766, or via the Internet at: democker.jim@epamail. epa.gov. To obtain copies of the latest complete draft of the Retrospective Study Report to Congress dated April 1997 and entitled ''The Benefits and Costs of the Clean Air Act, 1970 to 1990,'' please contact Ms. Michelle Olawuyi, Secretary, Office of Economy and Environment (MC 2172), US Environmental Protection Agency, 401 M Street, SW., Washington, DC 20460. Tel. (202) 260–5488; FAX (202) 260–5732, or via the Internet at olawuyi.michelle@epamail.epa.gov.

To obtain copies of the June 30, 1997 teleconference agenda, please contact Mrs. Diana L. Pozun, Secretary to the Council at Tel. (202) 260–8414; FAX (202) 260-7118; or via the Internet: pozun.diana@epamail.epa.gov. To discuss technical or logistical aspects of the Council's review process, please contact Dr. K. Jack Kooyoomjian, Designated Federal Official for the Council, Tel. (202) 260–2560; FAX (202) 260–7118; or via the Internet at: kooyoomjian.jack@epamail.epa.gov. Members of the public who wish to physically be present at the teleconference may do so at the U.S. Environmental Protection Agency (EPA) Headquarters Building, 401 M Street, SW., Washington, DC 20460, Waterside Mall Room Number 2103. Members of the public who wish to obtain teleconference logging-on procedures should contact Mrs. Diana L. Pozun at least one week prior to the teleconference.

Public Speaking

To request time to present public comments at the Council teleconference, please contact Mrs. Diana L. Pozun *in writing* at the mail, FAX or E-Mail addresses given above no later than one week prior to the teleconference.

Providing Oral or Written Comments at SAB Meetings

The Science Advisory Board (SAB) expects that public statements presented at its meetings will not be repetitive of previously submitted oral or written statements. In general, opportunities for oral comment at teleconference meetings will be usually limited to three minutes per speaker and no more than fifteen minutes total. Written comments (at least 35 copies) received in the SAB Staff Office sufficiently prior to a meeting date (usually one week prior to a meeting), may be mailed to the Council prior to its meeting; comments received too close to the meeting date will normally be provided to the Council at its meeting, except for teleconferences, where brief written materials may be FAXed to the participants, with more detailed or lengthy materials received too close to the teleconference to be mailed to the Council or its appropriate subcommittee participants shortly after the teleconference. Written comments may be provided up until the time of the meeting.

Dated: June 4, 1997.

Donald G. Barnes,

Staff Director, Science Advisory Board.

[FR Doc. 97–15727 Filed 6–13–97; 8:45 am]

BILLING CODE 6560–50–P

FEDERAL COMMUNICATIONS COMMISSION

Notice of Public Information Collections Submitted to OMB for Review and Approval

June 10, 1997.

SUMMARY: The Federal Communications Commission, as part of its continuing effort to reduce paperwork burden invites the general public and other Federal agencies to take this opportunity to comment on the following proposed and/or continuing information collections, as required by the Paperwork Reduction Act of 1995, Public Law 104–13. An agency may not conduct or sponsor a collection of information unless it displays a currently valid control number. No person shall be subject to any penalty for failing to comply with a collection of information subject to the Paperwork Reduction Act (PRA) that does not display a valid control number. Comments are requested concerning (a) whether the proposed collection of information is necessary for the proper performance of the functions of the Commission, including whether the information shall have practical utility; (b) the accuracy of the Commissions burden estimates; (c) ways to enhance the quality, utility, and clarity of the information collected and (d) ways to minimize the burden of the collection of information on the respondents, including the use of automated collection techniques or other forms of information technology.

DATES: Written comments should be submitted on or before July 16, 1997. If you anticipate that you will be submitting comments, but find it difficult to do so within the period of time allowed by this notice, you should advise the contact listed below as soon as possible.

ADDRESSES: Direct all comments to Judy Boley, Federal Communications

Commission, Room 234, 1919 M St., NW., Washington, DC 20554 or via internet to jboley@fcc.gov and Timothy Fain, OMB Desk Officer, 10236 NEOB 725 17th Street, NW., Washington, DC 20503 or fain__t@a1.eop.gov.

FOR FURTHER INFORMATION CONTACT: For additional information or copies of the information collections contact Judy Boley at 202–418–0214 or via internet at jboley@fcc.gov.

SUPPLEMENTARY INFORMATION:

OMB Approval No.: 3060–XXX.

Title: Amendment to Part 90 of the Commission's Rules to Provide for Use of the 220–222 MHz Band by Private Land Mobile Radio Service, PR 89–552.

Form No.: N/A.

Type of Review: New Collection.

Respondents: Businesses or other for profit.

Number of Respondents: 27,062.

Estimate Hour Per Response: This collection contains a number of information collection requirements ranging from 1–50 hours per response.

Total Annual Burden: 112,450 hours.

Estimated Cost Total Annual Costs: $28,490,000. This estimate includes costs incurred by respondents hiring consulting engineers to prepare the required information. The estimated costs for hiring these engineers is $200 per hour.

Needs and Uses: The enclosed *Third Report and Order (Third R&O)* adopts rules to govern the future operation and licensing of the 220–222 MHz band (220 MHz service). In establishing this new licensing plan, the Commission's goal is to establish a flexible regulatory framework that will allow for the efficient licensing of the 220 MHz service, eliminate unnecessary regulatory burdens, and enhance the competitive potential of the 220 MHz service in the mobile service marketplace. However, as with any licensing and operational plan for a radio service, a certain number of regulatory burdens are necessary. The various information reporting and verification requirements, and the requirement that licensees coordinate and provide written consent, concurrence or agreement with other licensees will be used by the Commission to verify licensee compliance with Commission rules and regulation and to ensure that licensees continue to fulfill their statutory responsibilities in accordance with the Communications Act of 1934. Such information has been used in the past and will continue to be used to minimize interference, verify that applicants are legally, technically, and financially qualified to hold licenses, and to determine compliance with Commission Rules.

The burden estimates provided in this notice differ from the estimates provided in the **Federal Register** summary of the Third R&O 62 FR 15978, April 3, 1997. In the submission the commission reestimated the burdens to account for respondents hiring consultant engineers, and clarified some of the requirements.

OMB Approval No.: 3060–0757.

Title: FCC Auctions Customer Survey.

Form No.: N/A.

Type of Review: Revision of a currently approved collection.

Respondents: Businesses or other for profit; and individuals or households.

Number of Respondents: 45,000.

Estimate Hour Per Response: 15 minutes.

Total Annual Burden: 10,875 hours.

Estimated Cost Total Annual Costs: There are no estimated cost incurred by the respondents.

Needs and Uses: Section 309(j)(3) of the Communications Act requires the Commission to, under appropriate circumstances, test various methodologies for conducting competitive bidding. By seeking input from auction participants throught the Auctions Customer Survey, the Commission with gather information to evaluate the operation of competitive bidding methodologies used to date and to improve the methodologies used in future auctions.

Federal Communications Commission.

William F. Caton,

Acting Secretary.

[FR Doc. 97–15639 Filed 6–13–97; 8:45 am]

BILLING CODE 6712–01–P

FEDERAL COMMUNICATIONS COMMISSION

Notice of Public Information Collection(s) Being Reviewed by the Federal Communications Commission

June 10, 1997.

SUMMARY: The Federal Communications Commission, as part of its continuing effort to reduce paperwork burden invites the general public and other Federal agencies to take this opportunity to comment on the following information collection(s), as required by the Paperwork Reduction Act of 1995, Public Law 104–13. An agency may not conduct or sponsor a collection of information unless it displays a currently valid control number. No person shall be subject to any penalty for failing to comply with a collection of information subject to the Paperwork Reduction Act (PRA) that does not display a valid control number. Comments are requested concerning (a) whether the proposed collection of information is necessary for the proper performance of the functions of the Commission, including whether the information shall have practical utility; (b) the accuracy of the Commission's burden estimate; (c) ways to enhance the quality, utility, and clarity of the information collected; and (d) ways to minimize the burden of the collection of information on the respondents, including the use of automated collection techniques or other forms of information technology.

DATES: Written comments should be submitted on or before July 16, 1997. If you anticipate that you will be submitting comments, but find it difficult to do so within the period of time allowed by this notice, you should advise the contact listed below as soon as possible.

ADDRESSES: Direct all comments to Judy Boley, Federal Communications Commission, Room 234, 1919 M St., NW., Washington, DC 20544 or via internet to jboleyfcc.gov.

FOR FURTHER INFORMATION CONTACT: For additional information or copies of the information collections contact Judy Boley, at 202–418–0214 or via internet to jboleyfcc.gov.

SUPPLEMENTARY INFORMATION:

OMB Approval No.: 3060–0438.

Title: Transmittal Sheet for Cellular Applications for Unserved Areas.

Form No.: FCC 464.

Type of Review: Revision of a currently approved collection.

Respondents: Business or other for-profit entities.

Number of Respondents: 49

Estimated Hour Per Response: .166 (10 minutes).

Freqency of Response: On occasion reporting requirement.

Estimateed Total Annual Burden: 8 hours.

Needs and Uses: FCC Rules require that applicants submit a transmittal sheet, FCC Form 464, in addition to other filing requirements pursuant to 47 CFR 22. FCC Form 464 is designed to facilitate application intake and other processing functions by serving as a cover sheet to the application. FCC Form 464 is used in Phase I of the licensing scheme for Cellular Applications for Unserved Areas.

The form is being revised to add a space for applicant's Internet or e-mail address and to add a space to collect Taxpayer Identification Number as required by the Debt Collection Improvement Act of 1966.

The Commission has re-evaluated it's receipts of this form which attributes to a significant decrease in the number of respondents from 20,000 to 49 and a decrease in the total annual burden from 34,320 hours to 8 hours. The filing activity of this form has been reduced to more of a maintenance-type function since most of the markets have been disbursed, thus causing a significant decrease in receipts.

The information collected will be used by the Commission to determine whether the applicant is qualified legally, technically and financially to be licensed as a cellular operator.

Federal Communications Commission.

William F. Caton,

Acting Secretary.

[FR Doc. 97–15699 Filed 6–13–97; 8:45 am]

BILLING CODE 6712–01–M

FEDERAL COMMUNICATIONS COMMISSION

Notice of Public Information Collection(s) Being Reviewed by the Federal Communications Commission

June 10, 1997.

SUMMARY: The Federal Communications Commission, as part of its continuing effort to reduce paperwork burden invites the general public and other Federal agencies to take this opportunity to comment on the following information collection(s), as required by the Paperwork Reduction Act of 1995, Public Law 104–13. An agency may not conduct or sponsor a collection of information unless it displays a currently valid control number. No person shall be subject to any penalty for failing to comply with a collection of information subject to the Paperwork Reduction Act (PRA) that does not display a valid control number. Comments are requested concerning (a) whether the proposed collection of information is necessary for the proper performance of the functions of the Commission, including whether the information shall have practical utility; (b) the accuracy of the Commission's burden estimate; (c) ways to enhance the quality, utility, and clarity of the information collected; and (d) ways to minimize the burden of the collection of information on the respondents, including the use of automated collection techniques or other forms of information technology.

DATES: Persons wishing to comment on this information collection should submit comments by August 15, 1997.

ADDRESSES: Direct all comments to Judy Boley, Federal Communications Commissions, Room 234, 1919 M St., N.W., Washington, DC 20554 or via internet to jboley@fcc.gov.

FOR FURTHER INFORMATION CONTACT: For additional information or copies of the information collections contact Judy Boley at 202–418–0214 or via internet at jboley@fcc.gov.

SUPPLEMENTARY INFORMATION:

OMB Approval No.: 3060–0132.

Title: Supplemental Information—72–76 MHz Operational Fixed Stations.

Form Number: FCC Form 1068–A.

Type of Review: Extension of a currently approved collection.

Respondents: Individuals or households; Business or other for-profit; Not-for-profit institutions; State, Local or Tribal Government.

Number of Respondents: 300.

Estimate Hour Per Response: .50 hours.

Frequency of Response: On occasion reporting requirement.

Total Annual Burden: 150 hours.

Needs and Uses: FCC Rules require that the applicant agrees to eliminate any harmful interference caused by the operation to TV reception on either channel 4 or 5 that might develop. This form is required by the Communications Act of 1934, as amended; International Treaties and FCC Rules 47 CFR Part 90.257.

FCC staff will use the data to determine if the information submitted will meet the FCC rule requirements for the assignment of frequencies in the 72–76 MHz band.

OMB Approval No.: 3060–0021.

Title: Civil Air Patrol Radio Station License.

Form Number: FCC Form 480.

Type of Review: Extension of a currently approved collection.

Respondents: Not-for-profit institutions.

Number of Respondents: 12.

Estimate Hour Per Response: .084 hours.

Frequency of Response: On occasion reporting requirement.

Total Annual Burden: 1 hour.

Needs and Uses: FCC Rules require that applicants file the FCC Form 480 to apply for a new, renewed, or modified Civil Air Patrol Radio Station License. This form is required by the Communications Act of 1934, as amended; International Treaties and FCC Rules 47 CFR Parts 1.922, 87.21, and 87.31.

The data will be used by Commission personnel to evaluate the application to issue licenses, to provide information for enforcement and rulemaking proceedings and to maintain a current inventory of licensees.

Federal Communications Commission.

William F. Caton,

Acting Secretary.

[FR Doc. 97–15698 Filed 6–13–97; 8:45 am]

BILLING CODE 6712–01–P

FEDERAL DEPOSIT INSURANCE CORPORATION

Sunshine Act Meeting

Pursuant to the provisions of the ''Government in the Sunshine Act'' (5 U.S.C. 552b), notice is hereby given that at 10:02 a.m. on Tuesday, June 10, 1997, the Board of Directors of the Federal Deposit Insurance Corporation met in closed session to consider certain corporate, supervisory, and administrative enforcement matters.

In calling the meeting, the Board determined, on motion of Director Joseph H. Neely (Appointive), seconded by Mr. John F. Downey, acting in the place and stead of Director Nicolas P. Retsinas (Acting Director, Office of Thrift Supervision), concurred in by Ms. Julie Williams, acting in the place and stead of Eugene A. Ludwig (Comptroller of the Currency), and Acting Chairman Andrew C. Hove, Jr., that Corporation business required its consideration of the matters on less than seven days' notice to the public; that no earlier notice of the meeting was practicable; that the public interest did not require consideration of the matters in a meeting open to public observation; and that the matters could be considered in a closed meeting by authority of subsections (c)(2), (c)(6), (c)(8), and (c)(9)(A)(ii) of the ''Government in the Sunshine Act'' (5 U.S.C. 552b (c)(2), (c)(6), (c)(8), and (c)(9)(A)(ii)).

The meeting was held in the Board Room of the FDIC Building located at 550—17th Street, NW., Washington, DC.

Dated: June 11, 1997.

Federal Deposit Insurance Corporation.

By:

Robert E. Feldman,

Deputy Executive Secretary.

[FR Doc. 97–15777 Filed 6–11–97; 4:27 pm]

BILLING CODE 6714–01–M

FEDERAL LABOR RELATIONS AUTHORITY

[FLRA Docket No. WA–RP–60071]

Notice of Opportunity To Submit Amici Curiae Briefs in Representation Proceeding Pending Before the Federal Labor Relations Authority

AGENCY: Federal Labor Relations Authority.

ACTION: Notice of the opportunity to file briefs as amici curiae in a proceeding before the Federal Labor Relations Authority in which the Authority is determining the representational status of employees who have been geographically relocated from an activity with one bargaining unit to an activity with two bargaining units, both of which are alleged to include the relocated employees.

SUMMARY: The Federal Labor Relations Authority provides an opportunity for all interested persons to file briefs as amici curiae on significant issues arising in a case pending before the Authority. The Authority is considering the case pursuant to its responsibilities under the Federal Service Labor-Management Relations Statute, 5 U.S.C. 7101–7135 (1994) (the Statute) and its regulations, set forth at 5 CFR part 2422 (1997). The issues concern how the Authority should resolve a representation case arising from an agency reorganization where two different unions claim to represent a group of employees who have been geographically relocated from one activity to another and the positions they encumber after the relocation are specifically excluded from the unit represented by one union and included in the unit represented by the other.

DATES: Briefs submitted in response to this notice will be considered if received by mail or personal delivery in the Authority's Office of Case Control by 5 p.m. on Monday, July 7, 1997. Placing submissions in the mail by this deadline will not be sufficient. Extensions of time to submit briefs will not be granted.

ADDRESSES: Mail or deliver briefs to Edward F. Bachman, Acting Director, Case Control Office, Federal Labor Relations Authority, 607 14th Street, NW., Suite 415, Washington, D.C. 20424–0001.

FORMAT: All briefs shall be captioned: *Defense Logistics Agency, Defense Supply Center, Columbus, Ohio, Case No. WA–RP–60071, Amicus Brief.* Briefs shall also contain separate, numbered headings for each issue discussed. An original and four (4) copies of each amicus brief must be submitted, with any enclosures, on 8½x11 inch paper. Briefs must include a signed and dated statement of service that complies with the Authority's regulations showing service of one copy of the brief on all counsel of record or other designated representatives. 5 CFR 2429.27 (a) and (c). Copies of the Authority's decision granting the application for review in this case and a list of the designated representatives for the case may be obtained in the Authority's Case Control Office at the address set forth below. Copies will be forwarded (by mail or by facsimile) to any person who so requests by contacting Edward F. Bachman at the same address.

FOR FURTHER INFORMATION CONTACT: Edward F. Bachman, at the address listed above or by telephone: (202) 482–6540.

SUPPLEMENTARY INFORMATION: On June 6, 1997, the Authority granted an application for review of the Regional Director's Decision and Order in *Defense Logistics Agency, Defense Supply Center, Columbus, Ohio,* Case No. WA–RP–60071 (53 FLRA No. 3 (1997)) (*Columbus Supply Center*). A summary of that case follows.

1. Background

During the summer of 1996, 970 employees, including 212 employees in two job series (GS–1670 equipment specialist and GS–1910 quality assurance specialist) (hereinafter ''the two job series'') accepted jobs through the Department of Defense (DOD) Priority Placement Program (PPP) at the Defense Logistics Agency (DLA), Defense Supply Center, Columbus, Ohio (Activity). These employees had previously been located at DLA, Defense Supply Center, Dayton, Ohio (Dayton Supply Center), where the positions they encumbered had been represented in a portion of a nationwide consolidated unit of the American Federation of Government Employees, AFL–CIO (hereinafter the AFGE consolidated unit). Those positions are excluded from the AFGE consolidated unit at the Activity, where 198 employees in the two job series are represented by the International Federation of Professional and Technical Engineers Local 7, AFL–CIO (IFPTE). The representational status of the remaining employees who were relocated from the Dayton Supply Center is not in dispute.

Separate from the relocation at issue in this case, the Activity changed the manner in which the employees in the two job series perform their work. Prior to 1994, employees in the two job series at the Activity did not work together with employees in other disciplines on interdisciplinary teams. In 1994, a reorganization resulted in the creation of interdisciplinary teams and, since that time, employees in the two job series have worked and been co-located with employees from other disciplines.

In October 1996, AFGE filed the petition in this case, seeking to clarify its consolidated unit at the Activity to include all employees in the two job series, including the 212 former Dayton Supply Center employees and the 198 employees currently represented by IFPTE. According to AFGE, the 1994 reorganization eliminated the separate community of interest previously shared by employees in that unit and resulted in an accretion of those employees into the AFGE consolidated unit. AFGE contends that since 1994 only one unit covering these employees has existed at the Activity and that, as a result, all employees placed in Activity positions after the subsequent disestablishment of the Dayton Supply Center are appropriately included in that unit.

2. The Regional Director's Decision

The Regional Director dismissed the petition. The Regional Director concluded that the IFPTE bargaining unit is an appropriate unit, consistent with section 7112(a) of the Statute. The Regional Director found that the former Dayton Supply Center employees in the two job series are properly included in the IFPTE unit because they are no different from new hires. Citing *U.S. Department of Veterans Affairs, Veterans Affairs Medical Center, Allen Park, Michigan,* 43 FLRA 264, 265 (1991), the Regional Director also concluded that, after the 1994 reorganization, the employees in the two job series did not accrete to the AFGE consolidated unit. Applying the factors for determining successorship set forth in *U.S. Department of the Navy, Fleet and Industrial Supply Center, Norfolk, Virginia,* 52 FLRA 950 (1997), the Regional Director further concluded that the Activity is not a successor employer to Dayton Supply Center and that, therefore, IFPTE retained its status as the exclusive representative of the former Dayton Supply Center employees in the two job series.

3. The Application for Review

AFGE filed the application for review, contending that review of the Regional Director's decision is warranted, under 5 CFR 2422.31(c), because it departs from Authority precedent. Specifically, AFGE contends that the Regional Director erred in determining that the IFPTE unit remained appropriate after the 1994 reorganization. AFGE also contends that the Regional Director's determination that the former Dayton Supply Center employees in the two job series are properly included in the IFPTE unit is contrary to Authority precedent concerning accretion and severance. Finally, AFGE asserts that the Regional Director's determination that the Activity is not a successor employer to Dayton Supply Center is based on a misapplication of the

principles concerning successorship set forth in Authority precedent.

4. Questions on Which Briefs Are Solicited

The Authority granted the application for review under 5 CFR 2422.31(c). The Authority found that there are genuine issues with respect to whether the Regional Director correctly applied principles relating to appropriateness of units, successorship and accretion in determining the representational status of employees in the two job series. In granting the application on these grounds, the Authority found that it appears that there is an absence of precedent that applies where a union seeks to continue to represent a group of employees who have been geographically relocated to an activity and the positions they encumber are specifically excluded from the unit at the activity represented by that union and included in the description of a unit represented by another union.

The Authority has directed the parties in the case to file briefs addressing the following questions, among others:

1. How, if at all, should successorship and accretion principles be applied to determine the representational status of employees who have been geographically relocated from a facility with one bargaining unit to a facility with two bargaining units, both of which are alleged to include the relocated employees?

a. Does the fact that the positions encumbered by the employees are specifically excluded from one of the bargaining units in the gaining facility and specifically included in the other bargaining unit affect the application of these principles? If so, how?

b. Does the fact that, before their reassignment, the employees were represented in the same consolidated unit that specifically excludes their positions at the gaining facility affect the application of these principles? If so, how? Do ''severance'' principles apply to this situation?

c. When, if at all, is an election appropriate in such circumstances? Is this determination affected by the relative size of the employee complements?

2. Do successorship principles apply where employees are relocated under a program such as the DOD Priority Placement Program?

3. Under what circumstances, if at all, should geographically relocated employees be considered comparable to newly hired employees?

4. Has a party waived its right to raise the effects of a reorganization on the appropriateness of a unit if it did not file a petition at the time of the reorganization?

As these matters are likely to be of concern to agencies, labor organizations, and other interested persons, the Authority finds it appropriate to provide for the filing of amicus briefs addressing these issues.

Dated: June 11, 1997.

Edward F. Bachman,

Acting Director, Case Control Office, Federal Labor Relations Authority.

[FR Doc. 97–15690 Filed 6–13–97; 8:45 am]

BILLING CODE 6727–01–P

FEDERAL RESERVE SYSTEM

Formations of, Acquisitions by, and Mergers of Bank Holding Companies

The companies listed in this notice have applied to the Board for approval, pursuant to the Bank Holding Company Act of 1956 (12 U.S.C. 1841 *et seq.*) (BHC Act), Regulation Y (12 CFR Part 225), and all other applicable statutes and regulations to become a bank holding company and/or to acquire the assets or the ownership of, control of, or the power to vote shares of a bank or bank holding company and all of the banks and nonbanking companies owned by the bank holding company, including the companies listed below.

The applications listed below, as well as other related filings required by the Board, are available for immediate inspection at the Federal Reserve Bank indicated. Once the application has been accepted for processing, it will also be available for inspection at the offices of the Board of Governors. Interested persons may express their views in writing on the standards enumerated in the BHC Act (12 U.S.C. 1842(c)). If the proposal also involves the acquisition of a nonbanking company, the review also includes whether the acquisition of the nonbanking company complies with the standards in section 4 of the BHC Act. Unless otherwise noted, nonbanking activities will be conducted throughout the United States.

Unless otherwise noted, comments regarding each of these applications must be received at the Reserve Bank indicated or the offices of the Board of Governors not later than July 10, 1997.

A. Federal Reserve Bank of St. Louis (Randall C. Sumner, Vice President) 411 Locust Street, St. Louis, Missouri 63102-2034:

1. First Eldorado Bancshares, Inc., Eldorado, Illinois; to acquire 100 percent of the voting shares of Dana Bancorp, Inc., Dana, Indiana, and thereby indirectly acquire First National Bank of Dana, Dana, Indiana.

Board of Governors of the Federal Reserve System, June 10, 1997.

Jennifer J. Johnson,

Deputy Secretary of the Board.

[FR Doc. 97–15627 Filed 6–13–97; 10:02 am]

BILLING CODE 6210–01–F

FEDERAL RESERVE SYSTEM

Formations of, Acquisitions by, and Mergers of Bank Holding Companies

The companies listed in this notice have applied to the Board for approval, pursuant to the Bank Holding Company Act of 1956 (12 U.S.C. 1841 *et seq.*) (BHC Act), Regulation Y (12 CFR Part 225), and all other applicable statutes and regulations to become a bank holding company and/or to acquire the assets or the ownership of, control of, or the power to vote shares of a bank or bank holding company and all of the banks and nonbanking companies owned by the bank holding company, including the companies listed below.

The applications listed below, as well as other related filings required by the Board, are available for immediate inspection at the Federal Reserve Bank indicated. Once the application has been accepted for processing, it will also be available for inspection at the offices of the Board of Governors. Interested persons may express their views in writing on the standards enumerated in the BHC Act (12 U.S.C. 1842(c)). If the proposal also involves the acquisition of a nonbanking company, the review also includes whether the acquisition of the nonbanking company complies with the standards in section 4 of the BHC Act. Unless otherwise noted, nonbanking activities will be conducted throughout the United States.

Unless otherwise noted, comments regarding each of these applications must be received at the Reserve Bank indicated or the offices of the Board of Governors not later than July 11, 1997.

A. Federal Reserve Bank of Dallas (Genie D. Short, Vice President) 2200 North Pearl Street, Dallas, Texas 75201-2272:

1. First Marshall Bancshares, Inc., Marshall, Texas, and First Marshall Delaware Bancshares, Inc., Dover, Delaware; to become bank holding companies by acquiring 100 percent of the voting shares of First Marshall Corporation, Marshall, Texas, and thereby indirectly acquire East Texas National Bank of Marshall, Marshall, Texas.

Board of Governors of the Federal Reserve System, June 11, 1997.

Jennifer J. Johnson,

Deputy Secretary of the Board.

[FR Doc. 97–15721 Filed 6–13–97; 8:45 am]

BILLING CODE 6210–01–F

FEDERAL RESERVE SYSTEM

Notice of Proposals to Engage in Permissible Nonbanking Activities or to Acquire Companies that are Engaged in Permissible Nonbanking Activities

The companies listed in this notice have given notice under section 4 of the Bank Holding Company Act (12 U.S.C. 1843) (BHC Act) and Regulation Y, (12 CFR Part 225) to engage *de novo*, or to acquire or control voting securities or assets of a company that engages either directly or through a subsidiary or other company, in a nonbanking activity that is listed in § 225.28 of Regulation Y (12 CFR 225.28) or that the Board has determined by Order to be closely related to banking and permissible for bank holding companies. Unless otherwise noted, these activities will be conducted throughout the United States.

Each notice is available for inspection at the Federal Reserve Bank indicated. Once the notice has been accepted for processing, it will also be available for inspection at the offices of the Board of Governors. Interested persons may express their views in writing on the question whether the proposal complies with the standards of section 4 of the BHC Act.

Unless otherwise noted, comments regarding the applications must be received at the Reserve Bank indicated or the offices of the Board of Governors not later than June 30, 1997.

A. Federal Reserve Bank of Richmond (A. Linwood Gill III, Assistant Vice President) 701 East Byrd Street, Richmond, Virginia 23261-4528:

1. Provident Bankshares Corporation, Baltimore, Maryland; to acquire First Citizens Financial Corporation, Gaithersburg, Maryland, and thereby indirectly acquire Citizens Savings Bank, F.S.B., Gaithersburg, Maryland, and thereby engage in operating a saving association, pursuant to § 225.28(b)(4)(ii) of the Board's Regulation Y; and in originating and selling residential mortgage loans, pursuant to § 225.28(b)(1) of the Board's Regulation Y; and in selling mortgage life insurance to borrowers of Citizens Savings Bank, F.S.B., pursuant to § 225.28(b)(11)(i) of the Board's Regulation Y.

B. Federal Reserve Bank of Chicago (Philip Jackson, Applications Officer) 230 South LaSalle Street, Chicago, Illinois 60690-1413:

1. First Chicago NBD Corporation, Chicago, Illinois; to acquire First Chicago Capital Markets, Inc., Chicago, Illinois, and thereby engage in underwriting and dealing in to a limited extent, equity securities. *See*, 75 Fed. Res. Bull. 192 (1989).

Board of Governors of the Federal Reserve System, June 10, 1997.

Jennifer J. Johnson,

Deputy Secretary of the Board.

[FR Doc. 97–15626 Filed 6–13–97; 10:02 am]

BILLING CODE 6210–01–F

GENERAL SERVICES ADMINISTRATION

[GSA Bulletin FPMR D–242]

Placement of Commercial Antennas on Federal Property

AGENCY: Office of Governmentwide Policy, GSA.

ACTION: Notice of bulletin.

SUMMARY: The attached bulletin provides all Federal agencies with the general guidelines and processes for implementation of President Clinton's memorandum of August 10, 1995, entitled ''Facilitating Access to Federal Property for the Siting of Mobile Services,'' and section 704(c) of the Telecommunications Act of 1996, Public Law 104–104.

EFFECTIVE DATE: June 11, 1997.

FOR FURTHER INFORMATION CONTACT: Stanley C. Langfeld, Director, Real Property Policy, 202–1737.

SUPPLEMENTARY INFORMATION:

GSA Bulletin FPMR D–242; Public Buildings and Space

To: Heads of Federal agencies

Subject: Placement of commercial antennas on Federal property

1. *Purpose.* This bulletin provides all Federal agencies with the general guidelines and processes for implementation of President Clinton's memorandum of August 10, 1995, entitled ''Facilitating Access to Federal Property for the Siting of Mobile Services Antennas'', and section 704(c) of the Telecommunications Act of 1996, Public Law 104–104 (47 U.S.C. §332 note).

2. *Expiration.* This bulletin expires June 30, 1999, unless sooner canceled or revised.

3. *Background.*

a. On August 10, 1995, President Clinton signed a memorandum directing the Administrator of General Services, in consultation with the heads of other Federal agencies, to develop procedures necessary to facilitate access to Federal property for the siting of ''mobile services antennas'' (telecommunications service provider equipment).

b. On February 8, 1996, the President approved the Telecommunications Act of 1996, which included a provision for making Federal property available for placement of telecommunications equipment by duly authorized providers.

c. On March 29, 1996, GSA published a Notice in the **Federal Register** outlining the guiding principles and actions necessary for Federal agencies to implement the antenna siting program promulgated by the Presidential memorandum and the Telecommunications Act of 1996.

d. In response to inquiries from the wireless telecommunications industry regarding the Federal Government's progress in this program, GSA's Office of Governmentwide Policy (OGP) held three Antenna Siting Forums: March 5, 1997, for Federal agencies; March 19, 1997, for the wireless telecommunications industry; and a joint forum on April 15, 1997.

e. A fact-finding working group comprised of industry and Federal agency representatives was established and met to discuss the issues raised during the initial two forums. These issues are:

(1) Development of a uniform evaluation process, including timely response and an appeals process, to facilitate and explain the basic application process;

(2) Site pricing to enable Federal agencies to retain flexibility in establishing the antenna rates;

(3) Site competition to provide timely response to requests and, where feasible, encourage industry collocation;

(4) Fee reimbursement to provide payment to the Federal Government for services and resources provided as part of the siting request review process;

(5) Site security, access, and rights-of-way to identify roles and responsibilities of both the Federal Government and the wireless telecommunications service provider; and

(6) Site request denial tracking to enable GSA and the wireless telecommunications industry to track antenna requests and denials.

f. GSA subsequently identified environmental and historic resource implications as issues to be considered by the working group and these issues are addressed in this document.

g. This collaborative effort, along with further meetings and discussions, has

resulted in a better understanding of processes and procedures between the wireless telecommunications industry and the Federal agencies.

h. The development of the following enhanced guidelines and procedures will further efforts for a more cooperative partnership between the Federal Government and the wireless telecommunications industry and continue to facilitate the implementation of the requirements of section 704(c) of the Telecommunications Act of 1996.

4. *Action.* The following guidelines and procedures should be followed by all Executive departments and agencies. In addition, all independent regulatory commissions and agencies are also requested to comply with the following:

a. *Determining impact to controlled property.* Each Executive department and agency which controls and operates real property, rights-of-way or easements to property under specific statutory authority is responsible individually for determining the extent and programmatic impact of placing commercially owned antennas on their properties.

b. *Review of internal agency rules.* Each Executive department and agency should review their rules, policies and procedures for allowing commercial use of their properties and modify them as necessary to assure they fully support the siting of commercial telecommunications service antennas as provided in these procedures.

c. *Dissemination of antenna guidelines.* Each Executive department and agency should ensure that the appropriate officials within their national, regional, and local offices who are responsible for the siting of commercial telecommunications service antennas comply with the requirements and policies prescribed by the Telecommunications Act of 1996, concerning property, rights-of-way and easements under their agency's control, and comply with the President's memorandum on facilitating access to Federal property.

d. *Preliminary response to siting request.* Each Executive department and agency should provide at least a preliminary written response to any antenna siting request no later than 60 days after receipt of the request. This response should be sent after performing an initial evaluation of the request.

e. *Open communications.* Each Executive department and agency should maintain open communications with the requesting wireless telecommunications provider. Communication is critical once a siting request has been submitted and should be maintained throughout the term of the working relationship.

f. *Points of contact.* Each Executive department and agency should, upon request, provide firms and individuals the owner agency's point of contact for placing commercial telecommunications service antennas on Federal properties. Generally, Federal buildings and courthouses are controlled by the General Services Administration; military posts and bases, by the Department of Defense; Veterans hospitals and clinics, by the Department of Veterans Affairs; and open land areas including National Parks, National Forests and other public lands by the Department of the Interior or the Department of Agriculture.

g. *Headquarters points of contact.* Attachment A is a listing of the agency contact points in the headquarters of Federal real property holding departments and agencies. Anyone interested in placing antennas on specific Federally-owned properties should contact the appropriate agency official.

h. *Information required.* Telecommunications services providers should specifically identify the Federal property and provide the basic information described in Attachment B (Uniform Review Process). Federal agencies should advise the applicants of any specific application procedures, and provide the name of the local site/facility manager to coordinate determination of site suitability as well as the term and instrument (e. g., lease, permit, license) required to complete the siting project.

i. *Assistance in determining property ownership.* In instances where the identity of the department or agency which has the custody and control of the property is unknown, the GSA/OGP Office of Real Property should be contacted. This office maintains a listing of all properties owned by the Federal Government world-wide and will assist in the identification of these properties. This office may be reached at (202) 501–0176, or by writing to the Office of Real Property (MP), Room 6233, General Services Administration, 1800 F Street, NW, Washington, DC 20405. To assist in identifying the appropriate Federal department or agency, inquiries should include the state, city/county, building/property name and mailing address of the property in question.

5. *Applicability.* These guidelines are applicable to Executive departments and agencies for antenna siting requests for rooftops, open land or other requests for access under this program. These guidelines are not intended to apply to lands held by the United States in trust for individual or Native American tribal governments. In order to facilitate compliance with the Telecommunications Act of 1996, the following principles should be used in evaluating requests for antenna siting access:

a. *Property availability.* Upon request, and to the extent permitted by law and to the extent practicable, Executive departments and agencies may make available Federal Government buildings and lands for the siting of telecommunications service antennas. This should be done in accordance with Federal, State and local laws and regulations, and consistent with national security concerns. Care should be exercised to avoid electromagnetic intermodulations and interferences. The evaluation of the siting request will include consideration of environmental and historic preservation issues including, but not limited to:

(1) Public health and safety with respect to the antenna installation and maintenance;

(2) Aesthetics;

(3) Effects on historic districts, sites, buildings, monuments, structures, or other objects pursuant to the National Historic Preservation Act and implementing regulations;

(4) Protection of natural and cultural resources (e.g., National Parks and Wilderness areas, National Wildlife Refuge systems);

(5) Compliance with the appropriate level of review and documentation as necessary under the National Environmental Policy Act and implementing regulations of each Federal department and agency responsible for the antenna siting project, and the Federal Aviation Administration, the National Telecommunications and Information Administration, and other relevant departments and agencies; and

(6) Compliance with the Federal Communications Commission's (FCC) guidelines for radiofrequency exposure (ET Docket No. 93–62 titled ''Guidelines for Evaluating the Environmental Effects of Radiofrequency Radiation'', issued August 1, 1996, and any other order on reconsideration relating to radiofrequency guidelines and their enforcement). These are updated guidelines for meeting health concerns that reflect the latest scientific knowledge in this area, and are supported by Federal health and safety agencies such as the Environmental Protection Agency and the Food and Drug Administration.

b. *Site evaluation.* The evaluation of any siting request will also be subject to

any requirements of the Federal agency managing the facility, FCC, Federal Aviation Administration, National Telecommunications and Information Administration, and other relevant departments and agencies. In addition, the National Capital Planning Commission should be consulted for siting requests within the Washington, D.C. metropolitan area.

c. *Granting siting requests.* Requests for the use of property, rights-of-way, and easements by duly authorized telecommunications service providers should be granted unless there are unavoidable conflicts with the department's or agency's mission, or current or planned use of the property or access to that property. A denial of a siting request based on these criteria should be fully explained in writing as noted in d. below.

d. *Agency discretion for site denial.* Executive departments and agencies shall retain discretion to reject inappropriate siting requests and assure adequate protection of public property. In cases where the antenna siting request has been denied, Executive departments and agencies should allow the service provider to appeal the decision to a higher level of agency authority for review. Written denial of a siting request should be fully explained, and should advise the service provider of the name and mailing address of the appropriate agency official to whom the appeal should be sent.

e. *Site access.* All procedures and mechanisms adopted by Executive departments and agencies regarding access to Federal property should be clear and simple so as to facilitate the efficient build-out of the national wireless communications infrastructure. Obtaining rights of access to Federal properties through non-Federal lands is the responsibility of the telecommunications service provider.

f. *Costs for services.* The telecommunications service provider is responsible for any reasonable costs to Federal agencies associated with providing access to antenna sites, including obtaining appropriate clearance of provider personnel for access to buildings or land deemed to be security sensitive as is done with service contractor personnel. OMB Circular A–25, titled ''User Charges'', revised July 8, 1993, established guidelines for agencies to assess fees for Government services and for the sale or use of Government property or resources.

g. *Site fees.* Pursuant to the Telecommunications Act of 1996, agencies are authorized to charge reasonable fees for antenna sites on Federal property. In accordance with the President's memorandum, Executive departments and agencies should charge fees based on market value. Fee determination can be based on appraisal, use of set rate schedules, or other reasonable means of value determination.

h. *Site requests.* Executive departments and agencies will make antenna sites available on a fair, reasonable, and nondiscriminatory basis. Collocation of antennas should be encouraged where there are multiple antenna siting requests for the same location. In cases where this is not feasible and space availability precludes accommodating all antenna siting applicants, competitive procedures may be used.

i. *Priority for siting antennas.* The siting of telecommunications service provider antennas should not be given priority over other authorized uses of Federal buildings or land.

j. *Advertising prohibition.* Antenna structures on Federal property may not contain any advertising.

k. *Equipment removal.* Terms and provisions of the lease, permit, license, or other legal instrument used should assure the timely removal or transfer of ownership of equipment and structures by the service provider. Unless otherwise expressly provided for, removal of such equipment and structures should be at the sole expense of the telecommunications service providers.

l. *Review process.* In order to provide further guidance to those Federal agencies which are unfamiliar with the siting request application process, Attachment B, Uniform Review Process, provides additional processing information to assist in the antenna siting request review.

m. *One-time reporting.* In order for GSA to ascertain the effectiveness and efficiency of these enhanced implementing guidelines and the uniform review process, all Executive departments and agencies receiving antenna siting requests within 6 months of publication of this document should provide GSA with a one-time summary report to indicate the number of siting requests received, approved, completed and denied during that time period. For those requests which are not approved, a narrative statement or copy of the formal written denial is requested to support your decision. This summary information should be received no later than 30 days after the end of the 6-month reporting period.

n. *Reporting office.* Reports should be sent to the GSA, OGP, Office of Real Property Policy (MP), 1800 F Street, NW, Room 6223, Washington, DC 20405.

o. *Information.* Further information regarding this bulletin may be obtained by contacting, Mr. Stanley C. Langfeld, Director, Real Property Policy on (202) 501–1737.

Dated: June 11, 1997.

G. Martin Wagner,

Associate Administrator for Governmentwide Policy.

Attachment A—Agency Contact Points for the Placement of Antennas on Federal Buildings

Bonneville Power Administration, Office of General Counsel, 905 Northeast 11th Avenue, Portland, OR 97232, (503) 230–5904

Federal Communications Commission, Operations Management and Service Division (1110B), 1919 M St., NW, Room 404, Washington, DC 50554, (202) 418–1950

National Academy of Science, National Research Council, 2101 Constitution Ave., NW, Mail Stop (HA–274), Washington, DC 20418, (202) 334–3384

National Aeronautics & Space Administration, Facilities Engineering Division, NASA Headquarters, Code JX, 300 E Street, SW, Washington, DC 20546–0001, (202) 358–1090

National Archives & Records Administration (NAFM), 8601 Adelphi Road, Room 2320, College Park, MD 20740–6001, (301)713–6470

National Science Foundation, Property Administrator, 4201 Wilson Blvd., Room 295, Arlington, VA 22230, (703) 306–1123

Tennessee Valley Authority, Facilities Services—Asset Management, 1101 Market Street, Mail Stop: (WR4A–C), Chattanooga, TN 37402–2801, (423) 751–2127

U.S. Army Corps of Engineers, Management and Disposal Division in the Real Estate Directorate, 20 Massachusetts Ave., NW, Room 4224, Washington, DC 20314–1000, (202) 761–0511

U.S. Department of Agriculture, Property Management Division, AG Box 9840, Washington, DC 20250, (202) 720–5225

U.S. Department of Commerce, Office of Real Estate, 14th & Constitution Ave., NW, Room 1040, Washington, DC 20230, 202) 482–3580

U.S. Department of Defense: Commercial companies who wish to place antennas on DOD property should first contact that property's Installation Commander. If unknown, please contact the following office. Deputy Assistant Secretary of Defense

(Installations), Attention: Director, Installations Management, 3300 Defense Pentagon, Washington, DC 20301–3340, (703) 604–4616

U.S. Department of Education, Office of the Director for Management, 600 Independence Ave., SW, Room 2164, Washington, DC 20202, (202) 401–0470

U.S. Department of Energy, Engineering & Space Management Branch, 1000 Independence Ave., SW, Mail Stop: HR211, Room 1F–039, Washington, DC 20585, (202) 586–1557

U.S. Department of Health & Human Services, Division of Policy Coordination, 300 Independence Ave., SW, Room 421, Washington, DC 20201, (202) 619–2018

U.S. Department of Interior, Bureau of Land Management, 1849 C Street, NW, Room 1000–LS, Washington, DC 20240–9998, (202) 452–7777

U.S. Department of Interior, National Park Service, Radio Frequency Manager, Field Operations, 12795 W. Alameda Parkway, P.O. Box 25287, Denver, CO 80225–0287, (303) 969–2084

U.S. Department of Justice, Real Property Management Services, Suite 1060, National Place Building, Washington, DC 20530, (202) 616–2266

U.S. Department of Labor, Office of Facility Management, 200 Constitution Ave., NW, Room S 1521/OFM, Washington, DC 20210, (202) 219–6434

U.S. Department of State, Office of Real Property, 2201 C Street, NW, Room 1878, Washington, DC 20520, (202) 647–2810

U.S. Department of Transportation, Office of the Secretary, 400 7th Street, SW, Mail Stop: M72, Room 2318, Washington, DC 20590, (202) 366–9724

U.S. Department of Treasury, Office of Real and Personal Property Management, Office of the Deputy Assistant Secretary for Departmental Finance and Management, 1500 Pennsylvania Ave., NW, Room 6140—ANX, Washington, DC 20220, (202) 622–0500

U.S. Department of Veterans Affairs, Land Management Service, 811 Vermont Ave., NW, Mail Stop: 184A, Washington, DC 20005, (202) 565–5026

U.S. Environmental Protection Agency, Architecture, Engineering and Real Estate Branch, Facilities Management and Services Division, 401 M Street, SW, Room 3204, Washington, DC 20460, 202) 260–2160

U.S. General Services Administration: Commercial companies who wish to place antennas on GSA property should first contact the appropriate Regional Office of the Public Buildings Service. If unknown, please contact the Public Buildings Service, 1800 F St., NW, Washington, DC 20405, (202) 501–1100

U.S. Government Printing Office, Office of Administrative Support, 710 North Capitol St., NW, Mail Stop: OA, Washington, DC 20401–0501, (202) 512–1074

U.S. Information Agency, Office of Administration—B/A, Cohen Building, 330 Independence Ave., SW, Washington, DC 20547, (202) 619–3988

U.S. Postal Service, Realty Asset Management, 475 L'Enfant Plaza West, SW, Washington, DC 20260–6433, (202) 268–5765

Attachment B—Uniform Review Process

The following information may be used as a guide by Federal agencies upon receipt of an antenna siting request. This uniform review process is intended to assist those Federal agencies who are unfamiliar with the review and evaluation of antenna siting proposals. This guidance has been developed based on input from several Federal agencies who have had extensive experience in working with the wireless communications industry and antenna siting requests for both rooftop and open land installations.

a. *Siting request review*. Federal agencies should review the siting request and ensure that sufficient basic evaluation information is provided. This basic information should include the following:

(1) Name, address and telephone number of applicant and authorized or legal representative for the project;

(2) Specific building name and address, or as appropriate, latitude and longitude or other site specific property identifier;

(3) Type and size of antenna installation and support required for the service provider's proposed wireless site including access to site, utility requirements, acreage of land or ft/lb capacity for rooftops, etc.). In cases where the proposed site is to be located on an established building or wireless facility, any special modification requirements unique to the service provider's proposal must be clearly identified;

(4) FCC license number (if a licensed facility), summary of antenna specifications including frequencies;

(5) Proposed term of requirement;

(6) Terms of removal of equipment and structures or property restoration;

(7) Description of project or larger antenna installation program, if applicable; and

(8) As appropriate, proposed method of achieving environmental and historic sensitivity compliance.

b. *Site survey*. (1) Upon agency completion of an initial review for information sufficiency, coordination with the facility manager, and determination that there is no obvious reason to deny the request, a site survey with the wireless telecommunications provider should be scheduled, in part to determine whether the site actually meets the needs of the service provider. If feasible, from the information available, a response should be sent to the applicant as soon as possible, but no later than 60 days after receipt either granting or denying the siting request.

(2) If there is insufficient information to make a decision, the agency should send a preliminary response to the applicant as soon as possible, but no later than 60 days after receipt of the request. This response should inform the applicant of the need for any additional information, unique conditions or restrictions of the property, or other circumstances which may affect the timing or ultimate determination for site approval. In addition, the National Capital Planning Commission should be consulted for siting requests within the Washington, D.C. metropolitan area.

c. *Point of contact*. In all cases, the agency's response should include the name and telephone number of the agency representative or facility manager responsible for the project. This information will enable the applicant to initiate planning for the potential use of the requested site.

d. *Need for additional information*. If the preliminary response indicates additional information is required, the agency should review the applicant's response in a timely manner upon its receipt. The applicant should be advised in writing if there are any other review and reporting requirements necessary due to statutory, legal, or the agency's internal requirements prior to issuing a final decision. This may include an Environmental Assessment or an Environmental Impact Statement and public hearings as part of the National Environmental Policy Act, or any other potential reviews.

e. *Notification of fees*. Applicants should be advised as soon as possible of their responsibility for any charges for Government services provided in the review process or other issues which need to be resolved. This response should provide the applicant with an estimated time frame for completing the

necessary actions and should be based on experience in dealing with projects of similar complexity.

f. *Final decisions.* Final decisions should be rendered in writing in a timely manner and after completion of all required reviews, evaluations or assessments. Denials of requests should provide the applicant with a written explanation of the reasons for denying the request. In addition, the applicant should be advised of the agency's appeal procedure and the name and mailing address of the appropriate agency official to whom the appeal should be sent.

g. *Formal documentation.* After agency determination to approve the project, a lease, permit, license or other legal instrument should be executed to document the terms, conditions, and responsibilities of both the Federal Government and the telecommunications service antenna provider.

[FR Doc. 97–15724 Filed 6–13–97; 8:45 am]

BILLING CODE 6820–34–P

DEPARTMENT OF HEALTH AND HUMAN SERVICES

Office of the Secretary

Agency Information Collection Activities: Submission for OMB Review; Comment Request

The Department of Health and Human Services Office of the Secretary publishes a list of information collections it has submitted to the Office of Management and Budget (OMB) for clearance in compliance with the Paperwork Reduction Act of 1995 (44 U.S.C. Chapter 35) and 5 CFR 1320.5. The following are those information collections recently submitted to OMB.

Public Health Service Acquisition Regulation—PHSAR Part 380—Special Program Requirements Affecting PHS Acquisitions, and Part 352—Solicitation Provisions and Contract Clauses—0990–0128—Extension—This clearance request addresses recordkeeping and reporting requirements in the Public Health Service Acquisition Regulation (PHSAR) for acquisitions involving safety and health, drugs and medical supplies, reusable cylinders and laboratory animals. Respondents: State or local governments, Businesses or other for-profit, non-profit institutions, Small businesses; Burden Information for Drugs and Medical Supplies—*Total Number of Respondents:* 43; *Annual Frequency of Response:* three times; *Average Burden per Response:* 2 hours; *Estimated Annual Burden for Drugs and Medical Supplies Requirement:* 258 hours.— Burden Information for Reusable Cylinders—*Total Number of Respondents:* 8; *Annual Frequency of Response:* five times; *Average Burden per Response:* 1 hour; *Estimated Annual Burden for Reusable Cylinders Requirement:* 40 hours.—Burden Information for Laboratory Animals—*Total Number of Respondents:* 63; *Annual Frequency of Response:* one time; *Average Burden per Response:* 10 hours; *Estimated Annual Burden for Laboratory Animals Requirement:* 630 hours.—Burden Information for Safety and Health—*Total Number of Respondents:* 60; *Annual Frequency of Response:* one time; *Averge Burden per Response:* 8 hours; *Estimated Annual Burden for Health and Safety Requirement:* 480 hours.—*Total Burden:* 1,408 hours.

OMB Desk Officer: Allison Eydt.

Copies of the information collection packages listed above can be obtained by calling the OS Reports Clearance Officer on (202) 690–6207. Written comments and recommendations for the proposed information collection should be sent directly to the OMB desk officer designated above at the following address: Human Resources and Housing Branch, Office of Management and Budget, New Executive Office Building, Room 10235, 725 17th Street N.W., Washington, D.C. 20503.

Comments may also be sent to Cynthia Agens Bauer, OS Reports Clearance Officer, Room 503H, Humphrey Building, 200 Independence Avenue S.W., Washington DC 20201, Written comments should be received on or before July 16, 1997.

Dated: June 9, 1997.

Dennis P. Williams,

Deputy Assistant Secretary, Budget.

[FR Doc. 97–15649 Filed 6–13–97; 8:45 am]

BILLING CODE 4150–04–M

DEPARTMENT OF HEALTH AND HUMAN SERVICES

National Committee on Vital and Health Statistic: Meeting

Pursuant to the Federal Advisory Committee Act, the Department of Health and Human Services announces the following advisory committee meeting

Name: National Committee on Vital and Health Statistics (NCVHS), Subcommittee on Population-Specific Issues.

Time and Dates: 1:00 p.m.–5:30 p.m., June 23, 1997.

Place: Room 337A, Hubert H. Humphrey Building, 200 Independence Avenue S.W., Washington, D.C. 20201.

Status: Open.

Purpose: The Subcommittee is expected to review the results of its San Francisco public hearing and to discuss its future work plan. In addition, the Subcommittee will review the results from federal sample survey tests conducted during the review of potential revisions to OMB Directive 15 governing the standards categories for race and ethnicity reporting in federal programs. The Subcommittee also will consider future agenda topics.

Contact Person for More Information: Substantive program information as well as summaries of the meeting and a roster of committee members may be obtained from James Scanlon, NCVHS Executive Staff Director, Office of the Assistant Secretary for Planning and Evaluation, DHHS, Room 44–D. Humphrey Building, 200 Independence Avenue S.W., Washington, D.C. 20201, telephone (202) 690–7100, or Marjorie S. Greenberg, Acting Executive Secretary, NCVHS, NCHS, CDC, Room 1100, Presidential Building, 6525 Belcrest Road, Hyattsville, Maryland 20782, telephone 301/436–7050.

Dated: June 9, 1997.

James Scanlon,

Director, Division of Data Policy.

[FR Doc. 97–15648 Filed 6–13–97; 8:45 am]

BILLING CODE 4151–04–M

DEPARTMENT OF HEALTH AND HUMAN SERVICES

National Committee on Vital and Health Statistics: Meeting

Pursuant to the Federal Advisory Committee Act, the Department of Health and Human Services announces the following advisory committee meeting.

Name: National Committee on Vital and Health Statistics (NCVHS).

Times and Dates: 8:30 a.m.–5:30 p.m., June 24, 1997. 8:00 a.m.–5:30 p.m., June 25, 1997.

Place: The Washington Marriot, 1221 22nd Street N.W., Washington D.C. 20037, Phone (202) 872–1500.

The hotel is located on 22nd Street between M and N Streets. The closest metro stops are Foggy Bottom (Blue and Orange lines) and Dupont Circle (Red Line). Limited parking is available in the area.

Status: Open.

Purpose: The meeting will focus on the Committee's progress in addressing new responsibilities in health data standards and health information privacy as outlined in the administrative simplification provisions of Public Law 104–191, the Health Insurance Portability and Accountability Act of 1996 (HIPAA), as well as on related matters. Department officials will brief the Committee on recent activities of the HHS Data Council, the status of HHS activities in implementing the administrative simplification provisions of P.L. 104–191, and related data policy activities.

The Committee also will consider subcommittee reports relating to health information privacy and health data

standards to support health care electronic data interchange, pursuant to P.L. 104–191. Based on those reports, the full Committee is planning to consider its HIPAA recommendations to the Secretary of Health and Human Services. Additional discussions are scheduled on State experiences in implementing health data standards for electronic data interchange and medical records privacy laws and initiatives. A status report also is scheduled on the process for review of OMB Directive 15 on race and ethnicity data. The Committee also will discuss its priorities and work plans.

Contact Person for More Information: Substantive program information as well as summaries of the meeting and a roster of committee members may be obtained from James Scanlon, NCVHS Executive Staff Director, Office of the Assistant Secretary for Planning and Evaluation, DHHS, Room 440–D. Humphrey Building, 200 Independence Avenue S.W., Washington, D.C. 20201, telephone (202) 690–7100, or Marjorie S. Greenberg, Acting Executive Secretary, NCVHS, NCHS, CDC, Room 1100, Presidential Building, 6525 Belcrest Road, Hyattsville, Maryland 20782, telephone 301/436–7050.

Dated: June 9, 1997.

James Scanlon,

Director, Division of Data Policy.

[FR Doc. 97–15780 Filed 6–13–97; 8:45 am]

BILLING CODE 4151–04–M

DEPARTMENT OF HEALTH AND HUMAN SERVICES

Office of the Secretary

Findings of Scientific Misconduct

AGENCY: Office of the Secretary, HHS.

ACTION: Notice.

SUMMARY: Notice is hereby given that the Office of Research Integrity (ORI) has made a final finding of scientific misconduct in the following case:

Fugang Li, Ph.D., University of Oklahoma Health Sciences Center: Based upon a report from the University of Oklahoma, information obtained by the Office of Research Integrity (ORI) during its oversight review, and Dr. Li's own admission, ORI found that Dr. Li, a former postdoctoral fellow in the Department of Biochemistry and Molecular Biology, University of Oklahoma Health Sciences Center, engaged in scientific misconduct by fabricating and falsifying data in conducting and reporting research supported by a grant from the National Heart, Lung and Blood Institute (NHLBI), National Institutes of Health (NIH).

Specifically, Dr. Li fabricated and falsified data in a study involving the characterization of glycoprotein binding to P-selectin on the surface of human leukocytes. The questioned data were included in a manuscript that was withdrawn prior to publication.

Dr. Li has accepted the ORI finding and has entered into a Voluntary Exclusion Agreement with ORI in which he has voluntarily agreed to exclude himself, for the three (3) year period beginning June 3, 1997, from:

(1) Any contracting or subcontracting with any agency of the United States Government and from eligibility for, or involvement in, nonprocurement transactions (e.g., grants and cooperative agreements) of the United States Government as defined in 45 CFR Part 76 (debarment Regulations); and

(2) Serving in any advisory capacity to the Public Health Service (PHS), including but not limited to service on any PHS advisory committee, board, and/or peer review committee, or as a consultant.

No scientific publications were required to be corrected as part of this Agreement.

FOR FURTHER INFORMATION CONTACT: Acting Director, Division of Research Investigations, Office of Research Integrity, 5515 Security Lane, Suite 700, Rockville, MD 20852, (301) 443–5330.

Chris B. Pascal,

Acting Director, Office of Research Integrity.

[FR Doc. 97–15758 Filed 6–13–97; 8:45 am]

BILLING CODE 4160–17–P

DEPARTMENT OF HEALTH AND HUMAN SERVICES

Centers for Disease Control and Prevention

Disease, Disability, and Injury Prevention and Control Special Emphasis Panel (SEP); Teleconference Meetings

In accordance with section 10(a)(2) of the Federal Advisory Committee Act (Pub. L. 92–463), the Centers for Disease Control and Prevention (CDC) announces the following committee meetings.

Name: Disease, Disability, and Injury Prevention and Control SEP: Cooperative Agreements for Prevention Research Centers/National Center for Chronic Disease Prevention and Health Promotion—General Special Interest Projects, Panel Number 1, Program Announcements 328, 432, 461, and 641.

Time and Date: 1 p.m.–5 p.m., July 7, 1997.

Place: National Center for Chronic Disease Prevention and Health Promotion (NCCDPHP), CDC, 4770 Buford Highway, NE, Atlanta, Georgia 30345.

Status: Closed.

Matters to be Discussed: The meeting will include the review, discussion, and evaluation of applications received in response to Program Announcements 328, 432, and 461, and 641, as announced in Guidance and Consideration in Planning Application for Fiscal Year 1997.

Contact Person for More Information: R. Brick Lancaster, Division of Adult and Community Health, NCCDPHP, CDC, 4770 Buford Highway, NE, M/S K30, Atlanta, Georgia 30345. Telephone 770/488–5532.

Name: Disease, Disability, and Injury Prevention and Control SEP: Cooperative Agreements for Prevention Research Centers/National Center for Chronic Disease Prevention and Health Promotion—General Special Interest Projects, Panel Number 2, Program Announcements 328, 432, 461, and 641.

Time and Date: 1 p.m.–5 p.m., July 8, 1997.

Place: National Center for Chronic Disease Prevention and Health Promotion (NCCDPHP), CDC, 4770 Buford Highway, NE, Atlanta, Georgia 30345.

Status: Closed.

Matters to be Discussed: The meeting will include the review, discussion, and evaluation of applications received in response to Program Announcements 328, 432, and 461, and 641, as announced in Guidance and Consideration in Planning Application for Fiscal Year 1997.

Contact Person for More Information: Jim Holt, Division of Adult and Community Health, NCCDPHP, CDC, 4770 Buford Highway, NE, M/S K30, Chamblee, Georgia 30341–3724. Telephone 770/488–5595.

Name: Disease, Disability, and Injury Prevention and Control SEP: Cooperative Agreements for Prevention Research Centers/National Center for Chronic Disease Prevention and Health Promotion—General Special Interest Projects, Panel Number 3, Program Announcements 328, 432, 461, and 641.

Time and Date: 1 p.m.–5 p.m., July 9, 1997.

Place: National Center for Chronic Disease Prevention and Health Promotion (NCCDPHP), CDC, 4770 Buford Highway, NE, Atlanta, Georgia 30345.

Status: Closed.

Matters to be Discussed: The meeting will include the review, discussion, and evaluation of applications received in response to Program Announcements 328, 432, and 461, and 641, as announced in Guidance and Consideration in Planning Application for Fiscal Year 1997.

Contact Person for More Information: Michael Gay, Division of Adult and Community Health, NCCDPHP, CDC, 4770 Buford Highway, NE, M/S K30, Chamblee, Georgia 30345. Telephone 770/488–5297.

Name: Disease, Disability, and Injury Prevention and Control SEP: Cooperative Agreements for Prevention Research Centers/National Center for Chronic Disease Prevention and Health Promotion—General Special Interest Projects, Panel Number 4, Program Announcements 328, 432, 461, and 641.

Time and Date: 1 p.m.–5 p.m., July 10, 1997.

Place: National Center for Chronic Disease Prevention and Health Promotion (NCCDPHP), CDC, 4770 Buford Highway, NE., Atlanta, Georgia 30345.

Status: Closed.

Matters to be Discussed: The meeting will include the review, discussion, and evaluation of applications received in response to Program Announcements 328, 432, and 461, and 641, as announced in Guidance and Consideration in Planning Application for Fiscal Year 1997.

Contact Person for More Information: James E. Barrow, Division of Adult and Community Health, NCCDPHP, CDC, 4770 Buford Highway, NE, M/S K30, Chamblee, Georgia 30345. Telephone 770/488–5269.

Name: Disease, Disability, and Injury Prevention and Control SEP: Cooperative Agreements for Prevention Research Centers/National Center for Chronic Disease Prevention and Health Promotion—General Special Interest Projects, Panel Number 5, Program Announcements 328, 432, 461, and 641.

Time and Date: 1 p.m.–5 p.m., July 11, 1997.

Place: National Center for Chronic Disease Prevention and Health Promotion (NCCDPHP), CDC, 4770 Buford Highway, NE, Atlanta, Georgia 30345.

Status: Closed.

Matters to Be Discussed: The meeting will include the review, discussion, and evaluation of applications received in response to Program Announcements 328, 432, 461, and 641, as announced in Guidance and Consideration in Planning Application for Fiscal Year 1997.

Contact Person for More Information: Jim Holt, Division of Adult and Community Health, NCCDPHP, CDC, 4770 Buford Highway, NE, M/S K30, Chamblee, Georgia 30341–3724. Telephone 770/488–5595.

These meetings will be closed to the public in accordance with provisions set forth in section 552b (c)(4) and (6), Title 5 U.S.C., and the Determination of the Associate Director for Management and Operations, CDC, pursuant to Pub. L. 92–463.

Dated: June 10, 1997.

Carolyn J. Russell,

Director, Management Analysis and Services Office, Centers for Disease Control and Prevention (CDC).

[FR Doc. 97–15677 Filed 6–13–97; 8:45 am]

BILLING CODE 4163–18–P

DEPARTMENT OF HEALTH AND HUMAN SERVICES

Food and Drug Administration

Request for Nominations for Members on Public Advisory Committees; Veterinary Medicine Advisory Committee

AGENCY: Food and Drug Administration, HHS.

ACTION: Notice.

SUMMARY: The Food and Drug Administration (FDA) is requesting nominations for members to serve on the Veterinary Medicine Advisory Committee (the committee) in FDA's Center for Veterinary Medicine.

FDA has a special interest in ensuring that women, minority groups, and individuals with disabilities are adequately represented on advisory committees and, therefore, the agency encourages nominations of appropriately qualified candidates from these groups.

DATES: No cutoff date is established for receipt of nominations.

ADDRESSES: All nominations for membership should be sent to Jacquelyn L. Pace (address below).

FOR FURTHER INFORMATION CONTACT: Jacquelyn L. Pace, Center for Veterinary Medicine (HFV–200), Food and Drug Administration, 7500 Standish Pl., Rockville, MD 20855, 301–594–5920.

SUPPLEMENTARY INFORMATION: FDA is requesting nominations for members to serve on the committee. The function of the committee is to review and evaluate available data concerning safety and effectiveness of marketed and investigational new animal drugs, feeds, and devices for use in the treatment and prevention of animal disease and increased animal production.

Criteria for Members

Persons nominated for membership on the committee shall have adequately diversified experience that is appropriate to the work of the committee in such fields as companion animal medicine, food animal medicine, avian medicine, microbiology, biometrics, toxicology, pathology, pharmacology, animal science, epidemiology and chemistry.

The specialized training and experience necessary to qualify the nominee as experts suitable for appointment are subject to review, but may include experience in medical practice, teaching, and/or research relevant to the field of activity of the committee. The term of office is 4 years.

Nomination Procedures

Any interested person may nominate one or more qualified persons for membership on the committee. Nominations shall state that the nominee is aware of the nomination, is willing to serve as a member of the committee, and appears to have no conflict of interest that would preclude committee membership. A current copy of nominee's curriculum vitae should be included. Potential candidates will be asked by FDA to provide detailed information concerning such matters as employment, financial holdings, consultancies, and research grants or contracts in order to permit evaluation of possible sources of conflict of interest.

This notice is issued under the Federal Advisory Committee Act (5 U.S.C. app. 2) and 21 CFR part 14 relating to advisory committees.

Dated: June 9, 1997.

Michael A. Friedman,

Deputy Commissioner for Operations.

[FR Doc. 97–15636 Filed 6–13–97; 8:45 am]

BILLING CODE 4160–01–F

DEPARTMENT OF HEALTH AND HUMAN SERVICES

Food and Drug Administration

[Docket No. 97D–0214]

Draft Guidance for Industry on Pharmacokinetics and Pharmacodynamics in Patients with Impaired Renal Function: Study Design, Data Analysis, and Impact on Dosing and Labeling; Availability

AGENCY: Food and Drug Administration, HHS.

ACTION: Notice.

SUMMARY: The Food and Drug Administration (FDA) is announcing the availability of a draft guidance entitled ''Pharmacokinetics and Pharmacodynamics in Patients with Impaired Renal Function: Study Design, Data Analysis, and Impact on Dosing and Labeling.'' The draft guidance is intended for sponsors planning to conduct studies to assess the influence of renal impairment on the pharmacokinetics and pharmacodynamics of an investigational drug.

DATES: Written comments may be submitted on the draft guidance by August 15, 1997. General comments on the agency guidance documents are welcome at any time.

ADDRESSES: Submit written requests for single copies of ''Pharmacokinetics and Pharmacodynamics in Patients with Impaired Renal Function: Study Design, Data Analysis, and Impact on Dosing and Labeling'' to the Drug Information Branch (HFD–210), Center for Drug Evaluation and Research, Food and Drug Administration, 5600 Fishers Lane, Rockville, MD 20857. Send one self-addressed adhesive label to assist that office in processing your requests. Submit written comments on the guidance to the Dockets Management Branch (HFA–305), Food and Drug

Administration, 12420 Parklawn Dr., rm. 1–23, Rockville, MD 20857.

FOR FURTHER INFORMATION CONTACT: Shiew-Mei Huang, Center for Drug Evaluation and Research (HFD–850), Food and Drug Administration, 5600 Fishers Lane, Rockville, MD 20857, 301–594–5671.

SUPPLEMENTARY INFORMATION: FDA is announcing the availability of a draft guidance entitled ''Pharmacokinetics and Pharmacodynamics in Patients with Impaired Renal Function: Study Design, Data Analysis, and Impact on Dosing and Labeling.''

The pharmacokinetics (PK) and pharmacodynamics (PD) of drugs primarily eliminated through the kidneys may be altered by impaired renal function to the extent that the dosage regimen needs to be changed from that used in patients with normal renal function. Although the most obvious type of change arising from renal impairment is a decrease in renal excretion (or possibly renal metabolism) of a drug or its metabolites, renal impairment also has been associated with other changes, such as changes in hepatic metabolism, plasma protein binding, and drug distribution. These changes may be particularly prominent in patients with severely impaired renal function and have been observed even when the renal route is not the primary route of elimination of a drug. Thus, for most drugs that are likely to be administered to patients with renal impairment, PK/PD characterization may need to be assessed in subjects with such impairment to provide appropriate dosing recommendations.

The draft guidance provides specific information on when studies of PK in patients with impaired renal function should be performed and when they may be unnecessary. It also addresses the design and conduct of PK/PD studies in patients with impaired renal function, the design and conduct of PK/PD studies in end stage renal disease (ESRD) patients treated with hemodialysis, the analysis and reporting of the results of such studies, and representation of these results in approved product labeling.

This draft guidance represents the agency's current thinking on conducting PK/PD studies on patients with impaired renal function. It does not create or confer any rights for or on any person and does not operate to bind FDA or the public. An alternative approach may be used if such approach satisfies the requirement of the applicable statute, regulations, or both.

Interested persons may submit written comments on the draft guidance to the Dockets Management Branch (address above). Two copies of any comments are to be submitted, except that individuals may submit one copy. Comments are to be identified with the docket number found in brackets in the heading of this document. The draft guidance and received comments may be seen in the office above between 9 a.m. and 4 p.m., Monday through Friday.

An electronic version of this draft guidance is available on the Internet using the World Wide Web (www) at http://www.fda.gov/cder/guidance.htm.

Dated: June 6, 1997.

William K. Hubbard,

Associate Commissioner for Policy Coordination.

[FR Doc. 97–15635 Filed 6–13–97; 8:45 am]

BILLING CODE 4160–01–F

DEPARTMENT OF HEALTH AND HUMAN SERVICES

Food and Drug Administration

Advisory Committee; Notice of Meeting

AGENCY: Food and Drug Administration, HHS.

ACTION: Notice.

This notice announces a forthcoming meeting of public advisory committees of the Food and Drug Administration (FDA). The meeting will be open to the public.

Name of Committees: Joint meeting of the Nonprescription Drugs Advisory Committee and the Dermatologic and Ophthalmic Drugs Advisory Committee.

General Function of the Committees: To provide advice and recommendations to the agency on FDA regulatory issues.

Date and Time: The meeting will be held on July 16, 1997, 8:30 a.m. to 5 p.m.

Location: Holiday Inn, Versailles Ballrooms I and II, 8120 Wisconsin Ave., Bethesda, MD.

Contact Person: Andrea G. Neal or Tracy Riley, Center for Drug Evaluation and Research (HFD–21), Food and Drug Administration, 5600 Fishers Lane, Rockville, MD 20857, 301–443–5455, or FDA Advisory Committee Information Line, 1–800–741–8138 (301–443–0572 in the Washington, DC area), codes 12541 and 12534. Please call the Information Line for up-to-date information on this meeting.

Agenda: The committee will hear presentations and discuss data submitted regarding the over-the-counter status of new drug application (NDA) 20-834, Rogaine® (minoxidil 5% topical solution), The Pharmacia & Upjohn Co. for use as a hair growth stimulant by men with androgenetic alopecia.

Procedure: Interested persons may present data, information, or views, orally or in writing, on issues pending before the committee. Written submissions may be made to the contact person by July 3, 1997. Oral presentations from the public will be scheduled between approximately 8:30 a.m. to 9:30 a.m. Time allotted for each presentation may be limited. Those desiring to make formal oral presentations should notify the contact person before July 3, 1997, and submit a brief statement of the general nature of the evidence or arguments they wish to present, the names and addresses of proposed participants, and an indication of the approximate time requested to make their presentation.

Notice of this meeting is given under the Federal Advisory Committee Act (5 U.S.C. app. 2).

Dated: June 9, 1997.

Michael A. Friedman,

Deputy Commissioner for Operations.

[FR Doc. 97–15632 Filed 6–13–97; 8:45 am]

BILLING CODE 4160–01–F

DEPARTMENT OF HEALTH AND HUMAN SERVICES

Food and Drug Administration

Advisory Committee; Notice of Meeting

AGENCY: Food and Drug Administration, HHS

ACTION: Notice.

This notice announces a forthcoming meeting of a public advisory committee of the Food and Drug Administration (FDA). The meeting will be open to the public.

Name of Committee: Circulatory System Devices Panel of the Medical Devices Advisory Committee.

General Function of the Committee: To provide advice and recommendations to the agency on FDA regulatory issues.

Date and Time: The meeting will be held on July 28, 1997, 9:30 a.m. to 6 p.m., and July 29, 1997, 8:30 a.m. to 3:30 p.m.

Location: Holiday Inn—Gaithersburg, Walker/Whetstone Salons, Two Montgomery Village Ave., Gaithersburg, MD.

Contact Person: John E. Stuhlmuller, Center for Devices and Radiological Health (HFZ–450), Food and Drug Administration, 9200 Corporate Blvd., Rockville, MD 20850, 301–443–8243, ext. 157, or FDA Advisory Committee

Information Line, 1–800–741–8138 (301–443–0572 in the Washington, DC area), code 12625. Please call the Information Line for up-to-date information on this meeting.

Agenda: On July 28, 1997, the committee will discuss a premarket approval application (PMA) for a transmyocardial revascularization device. On July 29, 1997, the committee will discuss a PMA for a laser sheath for pacing lead extraction.

Procedure: Interested persons may present data, information, or views, orally or in writing, on issues pending before the committee. Written submissions may be made to the contact person by July 18, 1997. Oral presentations from the public will be scheduled between approximately 9:30 a.m. to 10:30 a.m. on July 28, 1997, and between approximately 8:30 a.m. to 9:30 a.m. on July 29, 1997. Time allotted for each presentation may be limited. Those desiring to make formal oral presentations should notify the contact person before July 18, 1997, and submit a brief statement of the general nature of the evidence or arguments they wish to present, the names and addresses of proposed participants, and an indication of the approximate time requested to make their presentation.

Notice of this meeting is given under the Federal Advisory Committee Act (5 U.S.C. app. 2).

Dated: June 9, 1997.

Michael A. Friedman,

Deputy Commissioner for Operations.

[FR Doc. 97–15633 Filed 6–13–97; 8:45 am]

BILLING CODE 4160–01–F

DEPARTMENT OF HEALTH AND HUMAN SERVICES

Food and Drug Administration

Advisory Committee; Notice of Meeting

AGENCY: Food and Drug Administration, HHS.

ACTION: Notice.

This notice announces a forthcoming meeting of a public advisory committee of the Food and Drug Administration (FDA). The meeting will be open to the public.

Name of Committee: Biological Response Modifiers Advisory Committee.

General Function of the Committee: To provide advice and recommendations to the agency on FDA regulatory issues.

Date and Time: The meeting will be held on July 24 and 25, 1997, 8 a.m. to 5:30 p.m.

Location: Holiday Inn, Versailles Ballrooms I, II, and III, 8120 Wisconsin Ave., Bethesda, MD.

Contact Person: William Freas, Gail M. Dapolito, or Rosanna L. Harvey, Center for Biologics Evaluation and Research (HFM–21), Food and Drug Administration, 1401 Rockville Pike, Rockville, MD 20852, 301–827–0314, or FDA Advisory Committee Information Line, 1–800–741–8138 (301–443–0572 in the Washington, DC area), code 12388. Please call the Information Line for up-to-date information on this meeting.

Agenda: On July 24, 1997, during the morning session, the committee will discuss Neumega® (oprelvekin, recombinant human interleukin eleven, rhIL–11), Genetics Institute. An indication is sought for Neumega® for the prevention of chemotherapy-induced thrombocytopenia and reduction in the need for platelet transfusions in patients with nonmyeloid malignancies. During the afternoon session, the committee will discuss a premarket approval application for a device to concentrate CD34 positive cells in autologous peripheral blood stem cell products used for hematopoietic rescue. General data requirements for cell selection devices for hematopoietic rescue will also be discussed. On July 25, 1997, the committee will discuss Rituximab (C2B8 monoclonal antibody), IDEC. The company is seeking an indication for Rituximab as a treatment for patients with relapsed or refractory low grade or follicular B-cell non-Hodgkin's Lymphoma. The committee will also discuss Neupogen®, (Filgrastim, granulocyte colony-stimulating factor), Amgen. An indication is sought for use of Neupogen® to reduce the duration of neutropenia, fever, hospitalization, and antibiotic use in patients with acute myeloid leukemia.

Procedure: Interested persons may present data, information, or views, orally or in writing, on issues pending before the committee. Written submissions may be made to the contact person by July 17, 1997. Oral presentations from the public will be scheduled between approximately 8 a.m. and 8:30 a.m., both days. Time allotted for each presentation may be limited. Those desiring to make formal oral presentations should notify the contact person before July 17, 1997, and submit a brief statement of the general nature of the evidence or arguments they wish to present, the names and addresses of proposed participants, and an indication of the approximate time requested to make their presentation.

Notice of this meeting is given under the Federal Advisory Committee Act (5 U.S.C. app. 2).

Dated: June 9, 1997.

Michael A. Friedman,

Deputy Commissioner for Operations.

[FR Doc. 97–15634 Filed 6–13–97; 8:45 am]

BILLING CODE 4160–01–F

DEPARTMENT OF HEALTH AND HUMAN SERVICES

Food and Drug Administration

Advisory Committee; Notice of Meeting

AGENCY: Food and Drug Administration, HHS.

ACTION: Notice.

This notice announces a forthcoming meeting of public advisory committees of the Food and Drug Administration (FDA). This meeting will be open to the public.

Name of Committees: Joint meeting of the Nonprescription Drugs Advisory Committee and the Arthritis Advisory Committee with Representation from the Peripheral and Central Nervous System Drugs Advisory Committee.

General Function of the Committees: To provide advice and recommendations to the agency on FDA regulatory issues.

Date and Time: The meeting will be held on July 15, 1997, 8:30 a.m. to 5 p.m.

Location: Holiday Inn, Versailles Rooms I and II, 8120 Wisconsin Ave., Bethesda, MD.

Contact Person: Andrea G. Neal or Kathleen R. Reedy, Center for Drug Evaluation and Research (HFD–21), Food and Drug Administration, 5600 Fishers Lane, Rockville, MD 20857, 301–443–5455, or FDA Advisory Committee Information Line, 1–800–741–8138 (301–443–0572 in the Washington, DC area), codes 12541 and 12532. Please call the Information Line for up-to-date information on this meeting.

Agenda: The committee will hear presentations and discuss data submitted regarding New Drug Application (NDA) 20–802, Excedrin Extra Strength (acetaminophen, aspirin, caffeine) Tablets, Caplets, and Geltabs, 250 milligrams (mg), 250 mg, and 65 mg, respectively, Bristol Myers Squibb, for the pain of migraine.

Procedure: Interested persons may present data, information, or views, orally, or in writing, on issues pending before the committee. Written submissions may be made to the contact person by July 3, 1997. Oral

presentations from the public will be scheduled between approximately 8:30 a.m. and 9:30 a.m. Time allotted for each presentation may be limited. Those desiring to make formal oral presentations should notify the contact person before July 3, 1997, and submit a brief statement on the general nature of the evidence or arguments they wish to present, the names and addresses of proposed participants, and an indication of the approximate time requested to make their presentation.

Notice of this meeting is given under the Federal Advisory Committee Act (5 U.S.C. app. 2).

Dated: June 6, 1997.

Michael A. Friedman,

Deputy Commissioner for Operations.

[FR Doc. 97–15637 Filed 6–13–97; 8:45 am]

BILLING CODE 4160–01–F

DEPARTMENT OF HEALTH AND HUMAN SERVICES

Food and Drug Administration

Advisory Committee; Notice of Meeting

AGENCY: Food and Drug Administration, HHS.

ACTION: Notice.

This notice announces a forthcoming meeting of a public advisory committee of the Food and Drug Administration (FDA). The meeting will be open to the public.

Name of Committee: Dermatologic and Ophthalmic Drugs Advisory Committee.

General Function of the Committee: To provide advice and recommendations to the agency on FDA regulatory issues.

Date and Time: The meeting will be held on July 14 and 15, 1997, 8:30 a.m. to 5:30 p.m..

Location: Holiday Inn, Versailles Ballrooms I and II, 8120 Wisconsin Ave., Bethesda, MD.

Contact Person: Tracy K. Riley or Angie Whitacre, Center for Drug Evaluation and Research (HFD–21), Food and Drug Administration, 5600 Fishers Lane, Rockville, MD 20857, 301–443–5455, or FDA Advisory Committee Information Line, 1–800–741–8138 (301–443–0572 in the Washington, DC area), code 12534. Please call the Information Line for up-to-date information on this meeting.

Agenda: On July 14, 1997, the committee will discuss biologic licensing application (BLA) 96–1408, Regranex® (becaplermin [PDGF–BB], Chiron Corp., in a carboxymethyl cellulose gel), OMJ Pharmaceuticals, Inc., for treatment of chronic diabetic foot ulcers. On July 15, 1997, the committee will participate in a general scientific discussion regarding the development of a possible future guidance document for chronic cutaneous ulcers. This is one segment of an overall effort by the agency to provide guidance on wound healing products, including a future discussion of products for treatment of burns. The agency encourages investigators, academicians, members of the pharmaceutical industry, consumer groups, and others with information relevant to the topics to respond to the contact person.

Procedure: Interested persons may present data, information, or views, orally or in writing, on issues pending before the committee. Written submissions may be made to the contact person by July 3, 1997. Oral presentations from the public will be scheduled between approximately 8:30 a.m. and 9 a.m., on July 14, 1997; between approximately 8:30 a.m. and 9 a.m., and between approximately 1 p.m. and 1:30 p.m., on July 15, 1997. Time allotted for each presentation may be limited. Those desiring to make formal presentations should notify the contact person before July 3, 1997, and submit a brief statement of the general nature of the evidence or arguments they wish to present, the names and addresses of proposed participants, and an indication of the approximate time requested to make their presentation.

Notice of this meeting is given under the Federal Advisory Committee Act (5 U.S.C. app. 2).

Dated: June 9, 1997.

Michael A. Friedman,

Deputy Commissioner for Operations.

[FR Doc. 97–15638 Filed 6–13–97; 8:45 am]

BILLING CODE 4160–01–F

DEPARTMENT OF HEALTH AND HUMAN SERVICES

Food and Drug Administration

Advisory Committee; Notice of Meeting

AGENCY: Food and Drug Administration, HHS.

ACTION: Notice.

This notice announces a forthcoming meeting of a public advisory committee of the Food and Drug Administration (FDA). The meeting will be open to the public.

Name of Committee: Psychopharmacologic Drugs Advisory Committee.

General Function of the Committee: To provide advice and recommendations to the agency on FDA regulatory issues.

Date and Time: The meeting will be held on July 14, 1997, 8:30 a.m. to 5 p.m.

Location: Holiday Inn, Grand Ballroom, Two Montgomery Village Ave., Gaithersburg, MD.

Contact Person: Rhonda W. Stover or Robinette Taylor, Center for Drug Evaluation and Research (HFD–21), Food and Drug Administration, 5600 Fishers Lane, Rockville, MD 20857, 301–443–5455, or FDA Advisory Committee Information Line, 1–800–741–8138 (301–443–0572 in the Washington, DC area), code 12544. Please call the Information Line for up-to-date information on this meeting.

Agenda: The committee will consider proposals to reduce the frequency of required white blood cell count monitoring for Clozaril® (clozapine), new drug application (NDA) 19–758, Sandoz Pharmaceutical Corp.

Procedure: Interested persons may present data, information, or views, orally or in writing, on issues pending before the committee. Written submissions may be made to the contact person by July 7, 1997. Oral presentations from the public will be scheduled between approximately 8:30 a.m. and 9:30 a.m. Time allotted for each presentation may be limited. Those desiring to make formal oral presentations should notify the contact person before July 7, 1997, and submit a brief statement of the general nature of the evidence or arguments they wish to present, the names and addresses of proposed participants, and an indication of the approximate time requested to make their presentation.

Notice of this meeting is given under the Federal Advisory Committee Act (5 U.S.C. app. 2).

Dated: June 9, 1997.

Michael A. Friedman,

Deputy Commissioner for Operations

[FR Doc. 97–15761 Filed 6–13–97; 8:45 am]

BILLING CODE 4160–01–F

DEPARTMENT OF HEALTH AND HUMAN SERVICES

Food and Drug Administration

[Docket No. 97D–0164]

Positron Emission Tomography Drug Products; Draft Guidance for Industry on Content and Format of an Abbreviated New Drug Application; Availability; Extension of Comment Period

AGENCY: Food and Drug Administration, HHS.

ACTION: Notice; extension of comment period.

SUMMARY: The Food and Drug Administration (FDA) is extending to August 27, 1997, the comment period on the agency's draft guidance entitled ''Guidance for Industry: Content and Format of an Abbreviated New Drug Application (ANDA)—Positron Emission Tomography (PET) Drug Products.'' FDA published a notice of availability of the draft guidance in the **Federal Register** of April 23, 1997 (62 FR 19767). FDA is extending the comment period in response to a request by the Institute for Clinical PET for additional time for the PET community to review the agency's proposed guidance on the submission of ANDA's for PET drugs.

DATES: Written comments by August 27, 1997. General comments on agency guidance documents are welcomed at any time.

ADDRESSES: Submit written comments to the Dockets Management Branch (HFA–305), Food and Drug Administration, 12420 Parklawn Dr., rm. 1–23, Rockville, MD 20857.

FOR FURTHER INFORMATION CONTACT: Peter Rickman, Center for Drug Evaluation and Research (HFD–615), Food and Drug Administration, 5600 Fishers Lane, Rockville, MD 20857, 301–827–5862.

SUPPLEMENTARY INFORMATION: In the **Federal Register** of April 23, 1997, FDA published a notice announcing the availability of a draft guidance document entitled ''Guidance for Industry: Content and Format of an Abbreviated New Drug Application (ANDA)—Positron Emission Tomography (PET) Drug Products.'' The draft guidance is intended to assist applicants who wish to submit ANDA's for Fludeoxyglucose F18 injection. The notice invited interested persons to submit written comments on the draft guidance by June 28, 1997.

On May 5, 1997, FDA received a letter from Ernest V. Garcia, President of the Institute for Clinical PET, requesting that the agency extend the comment period on the draft guidance on ANDA's for PET drug products. FDA has considered this request and is extending the comment period for 60 days.

Interested persons may, on or before August 27, 1997, submit to the Dockets Management Branch (address above) written comments on the draft guidance. Two copies of any comments are to be submitted, except that individuals may submit one copy. Comments are to be identified with the docket number found in brackets in the heading of this document. The draft guidance and received comments may be seen in the office above between 9 a.m. and 4 p.m., Monday through Friday.

Dated: June 10, 1997.

William K. Hubbard,

Associate Commissioner for Policy Coordination.

[FR Doc. 97–15760 Filed 6–13–97; 8:45 am]

BILLING CODE 4160–01–F

DEPARTMENT OF HEALTH AND HUMAN SERVICES

National Institutes of Health

National Human Genome Research Institute; Notice

Request for application, low-cost, high-accuracy DNA sequencing technologies.

NIH GUIDE, Volume 26, Number 16, May 16, 1997.

RFA: HG–97–002.

P.T. 34; K.W. 1215018, 0755045.

National Human Genome Research Institute.

Letter of Intent Receipt Date: August 1, 1997.

Application Receipt Date: October 16, 1997.

Purpose

The purpose of this Request for Applications (RFA) is to stimulate research on next-generation technologies that have the potential to reduce the cost of high-accuracy genomic DNA sequencing by at least an order of magnitude.

Healthy People 2000

The Public Health Service (PHS) is committed to achieving the health promotion and disease prevention objectives of ''Healthy People 2000,'' a PHS-led national activity for setting priority areas. This RFA, Low-Cost, High-Accuracy DNA Sequencing Technologies, is related to several priority areas including cancer, heart disease and stroke, diabetes and chronic disability conditions, and maternal and infant health. Potential applicants may obtain a copy of ''Healthy People 2000'' (Full Report: Stock No. 017–001–00474–0 or Summary Report: Stock No. 017–001–00473–1) through the Superintendent of Documents, Government Printing Office, Washington, DC 20402–9325 (telephone 202–512–1800).

Eligibility Requirements

Applications may be submitted by domestic for-profit and non-profit organizations, public and private, such as universities, colleges, hospitals, laboratories, companies, units of State and local governments, and eligible agencies of the Federal government. Racial/ethnic minority individuals, women, and persons with disabilities are encouraged to apply as Principal Investigators. Applications from foreign institutions will not be accepted. However, subcontracts to foreign institutions are allowable, with sufficient justification.

Mechanism of Support

This RFA will use the National Institutes of Health (NIH) research project grant (R01), First Independent Research Support and Transition (FIRST) (R29) award, exploratory/developmental grant (R21), and program project (P01) mechanisms. The total project period for an R01 or P01 application submitted in response to this RFA may not exceed three years. R29 grants are subject to the usual conditions for the FIRST awards. Exploratory/developmental (R21) grants will be limited to $100,000 direct cost per year for a maximum of three years (one year longer than NHGRI's standard R21 grant). The R21 grant mechanism is used to support highly creative approaches for which substantial preliminary data are not yet available. Specific information about the R21 grant mechanism can be found in the NHGRI Program Announcement PA–97–045, ''Pilot Projects or Feasibility Studies for Genomic Mapping, Sequencing and Analysis'' (available from http://www.nhgri.nih.gov/Grant____info/Funding/Research/pilotpa.html). The R21 grants are not renewable, but future project continuation is possible through other grant mechanisms such as the R01 or P01. Responsibility for the planning, direction, and execution of the proposed project will be solely that of the applicant. Awards will be administered under PHS grants policy as stated in the Public Health Service Grants Policy Statement. The anticipated award date is July 1, 1998. It is anticipated that another RFA related to DNA sequencing

technology will be issued by NHGRI next year.

Funds Available

It is anticipated that approximately $5 million (total costs) will be available for this initiative in Fiscal Year 1998. NHGRI anticipates that projects at very different stages of development will be submitted in response to this RFA. Therefore, the size of awards may vary substantially; accordingly the number of grants funded may be as few as five or as many as 20, depending on the quality and scope of the applications received. Awards pursuant to this RFA are contingent upon the availability of funds for this purpose. The amount of funding for this solicitation may be increased if a large number of highly meritorious applications is received and if funds are available. Only applications found to be of high scientific merit will be considered for funding and all of the funds will not be spent if there are not enough highly meritorious applications. Any applicant planning to submit an application for more than $500,000 direct cost in any one year MUST contact the NHGRI staff listed under inquiries in order for the application to be accepted by NIH.

Research Objectives

Background

NHGRI is currently engaged, along with several other federal, private, and international organizations, in a fifteen year research program called the Human Genome Project (HGP). The goals are to characterize the genomes of human and selected model organisms, to develop technologies to analyze the human genome, to examine the ethical, legal, and social implications of human genetics research, and to train scientists who will be able to utilize the tools and resources developed through the HGP to pursue biological studies that will improve human health.

Significant progress toward completing these goals has been made in the past seven years, with several having already been achieved. The genetic mapping goals for both the human and the mouse have been met. Progress toward the human and mouse physical mapping goals is steady, with sufficient support in place to allow the achievement of these goals ahead of schedule. There has also been good progress toward meeting the sequencing goals. The genomic sequence of both *E. coli* and *S. cerevisiae* have been determined, the sequence of *C. elegans* is expected to be finished by 1998, and the complete sequence of *D. melanogaster* is expected to be finished shortly after the end of this century.

As a result of recent improvements in sequencing technology and strategies, confidence is high that current technology, enhanced by foreseeable improvements, will be sufficient to complete a reference human genomic DNA sequence by the target date, 2005. To this end, pilot projects for large-scale production of human genomic DNA sequence were initiated in 1996. However, even with anticipated improvements, DNA sequencing is likely to remain too expensive to meet the scientific demand for sequence information. For example, additional sequencing will be needed to understand the sequence variation between individuals that is associated with individual differences in inherited susceptibility to disease. Such studies may require obtaining the sequence of much of the genomic DNA from large numbers (tens to possibly thousands) of individuals. Similarly, the utility of the initial complete genomic sequence of a few organisms for understanding their biology will increase the incentive to collect genomic sequence information for many other organisms to study their biology and evolutionary and symbiotic relationships. DNA sequencing of that magnitude can only be contemplated when sequencing techniques have been made considerably more cost-effective and robust than they are today, or will be in the foreseeable future. The purpose of this RFA is to stimulate the development of the technologies needed to achieve these goals.

Objectives and Scope

Technologies for *de novo* sequencing and re-sequencing are needed. It should be noted that the conceptual distinction between these DNA sequencing technologies is not fundamental, but is instead a function of the limitations of the technologies as currently implemented. As novel methods are introduced and sequencing technologies mature, throughput and accuracy will increase and cost will decrease, and the distinction may not persist. However, at least for the present, the capabilities of these approaches and their potential near-term applications are sufficiently different to justify distinguishing between them for the purpose of this RFA.

De novo sequencing involves determining DNA sequence without any prior knowledge of that sequence. The initial reference human sequence will be determined by *de novo* sequencing, as were the sequences of yeast, *H. influenzae*, *M. genitalium*, *M. jannaschii*, and *E. coli*. Technology for *de novo* sequencing will continue to be needed to determine the complete sequence of the genomes of numerous other organisms including pathogens, agriculturally important organisms, and those that have utility as model organisms and sources of pharmaceutical products.

Technology is also needed for re-sequencing or rapidly comparing sequences to identify differences. Re-sequencing takes advantage of sequence information obtained from one sample, to design a more efficient approach to determining the sequence of another, similar sample. Today's re-sequencing technologies are effective for samples that are extremely similar (e.g., for identifying single-base differences in a particular gene isolated from two individuals). With additional development, however, the data quality and throughput of re-sequencing technology my be improved, and expanded to allow determination of sequence in cases such as insertions or deletions relative to a reference sequence. Re-sequencing technology may be the most cost-effective way, for example, to collect the large amounts of sequence data from large numbers of individuals that is needed to understand the sequence variations associated with individual differences in inherited susceptibility to disease.

This RFA seeks to stimulate research on next-generation technologies (including those for *de novo* sequencing, re-sequencing, or both) that have the potential to reduce the cost of high-accuracy genomic DNA sequencing by at least an order of magnitude. State-of-the-art technology can currently generate *de novo* sequence data containing less than 1 error per 10,000 base pairs at a total cost (including machines, personnel, supplies, and overhead) of approximately $0.50 per base pair. The goal of research under this RFA will be to drive the total cost of obtaining accurate (<1 error in 10,000 bp) *de novo* sequence to well below $0.05 per base pair; re-sequencing should cost considerably less.

Applications responsive to this RFA will include those designed to:

Conduct research on novel scientific or engineering principles which have promise for being applicable to the development of cost-effective DNA sequencing technologies;

Study the application to DNA sequencing of principles that are well established in other fields of science or engineering, and that have strong potential for application to DNA sequencing, but for which such application may not have been demonstrated; and

Further develop technologies for which proof of principle for DNA sequencing may already have been demonstrated, but for which substantial additional work is required to achieve high throughput and low cost for genomic sequencing (examples include mass spectrometry, sequencing by hybridization, and micromachined and micro-electro-mechanical systems [MEMS]).

This list is not intended to be all-inclusive, but instead to provide examples of responsive projects. Potential applicants who have questions about the responsiveness of specific ideas are encouraged to contact NHGRI staff listed under Inquiries before submitting an application.

Applicants should directly address the advantages of the proposed approach over existing approaches, and justify their assertion that successful development of the technology will result in a ten-fold decrease in the cost of sequencing. Applicants proposing to develop technologies for which proof of principle for DNA sequencing has not yet been demonstrated should describe clearly the manner in which the proposed technology might be applied to sequencing. For such projects, it will be difficult to predict with confidence the cost of sequencing using the technology. It is therefore particularly important to present a clear conceptual overview of the entire system in which the technology would be used and if possible to estimate the cost of developing, producing, and using such a system.

Current DNA sequencing approaches require some combination of steps, including the isolation of DNA from biological samples, biochemical amplification of the DNA within the sample, incorporation of fluorescent label into the sample, determination of the nucleotide sequence of each sample, ''assembly'' of data from numerous overlapping and redundant determinations into a continuous dataset, and analysis of the sequence data. As new technologies are developed, some or all of these steps may still be required. Research on all of these steps, and particularly on the integration of steps into a continuous process, will be supported under this RFA. For projects whose aim is to develop integrated systems, applicants should address the throughput of the various system components, and how the entire system will support the achievement of the cost and quality goals of this RFA.

The RFA will also accept applications to develop computational tools needed in support of systems or in conjunction with components eligible for funding under this RFA. Support for development of computational tools may be included as part of the technology development application. An application to develop computational tools that is submitted independently of a proposal to develop hardware systems should describe how the results of the independent research will be integrated with existing or planned technology.

The following types of research will NOT be supported under this RFA: projects to improve slab gels, microchannels, and capillary array electrophoresis, in systems in which the well-to-read distance is measured in tens of centimeters. This type of research is currently receiving support from NHGRI as a result of recent RFAs. However, NHGRI continues to encourage this type of technology development for DNA sequencing; applications for such studies should be submitted under the Program Announcement PA–97–044 ''Technologies for Genomic Mapping, Sequencing, and Analysis'' (available from http://www.nhgri.nih.gov/Grant__info/Funding/Research/techpa.html).

Inclusion of Women and Minorities in Research Involving Human Subjects

It is the policy of the NIH that women and members of minority groups and their sub-populations must be included in all NIH supported biomedical and behavioral research projects involving human subjects, unless a clear and compelling rationale and justification is provided that inclusion is inappropriate with respect to the health of the subjects or the purpose of the research. This policy results from the NIH Revitalization ACT of 1993 (Section 492B of Public Law 103–43).

All investigators proposing research involving human subjects should read the ''NIH Guidelines for Inclusion of Women and Minorities as Subjects in Clinical Research,'' which have been published in the **Federal Register** of March 28, 1994 (FR 59 14508–14513) and in the NIH Guide for Grants and Contracts, Volume 23, Number 11, March 18, 1994.

Special Requirements

Statement of milestones: It has been the experience of NGHRI that technology development projects that establish a clear statement of their milestones, and benchmarks by which attainment of those milestones can be measured, make more rapid progress toward achieving their short- and long-range goals. Therefore, applicants should present a clear timetable for the achievement of specific milestones, and should define the benchmarks by which progress toward those milestones will be measured. Both the milestones and benchmarks should be stated as quantitatively as possible.

Dissemination of the results of technology development research: Proposals should address the issue of access by groups other than the developers to any instruments or software developed through this program.

Post-award management: During the course of the grant period, technologies will improve and the rate of progress and focus of work supported by the grants may change. It is expected that the principal investigators will make any necessary adjustments in scientific direction to accommodate the changing environment. During the award period, the principal investigators may be invited to meet with NIH program staff in Bethesda, MD, or at the grantee site, to review scientific progress. Other scientists external to and knowledgeable about these studies may also be invited to participate. Applicants should include travel funds for the P.I. to meet annually with NIH staff in the Washington, D.C. area, should such meetings be advisable.

Special human subjects issues: Recently, it has become evident that special human subjects issues are raised by the large-scale sequencing of human genomic DNA because large amounts of DNA sequence information from single individuals may be generated. Similar issues can be anticipated in projects in which sequence variations are identified in individuals. The NHGRI and the DOE have recently issued a document, ''Guidance on Human Subjects Issues in Large-Scale DNA Sequencing'' to address these issues. This document can be found on the NHGRI web site at (http://www.NHGRI.nih.gov/Grant__infor/Funding/Statements/large__scale.html). Any application submitted in response to this RFA that includes a plan to sequence at least 1 megabase of human DNA during the period of the grant, or to determine a large number of human sequence polymorphisms, in the context of testing the technology under development, should address these special human subjects issues.

Letter of Intent

Prospective applicants are asked to submit, by August 1, 1997, a letter of intent that includes a descriptive title of the proposed research, the name, address, and telephone number of the Principal Investigator, the identities of

other key personnel and participating institutions, and the number and title of the RFA in response to which the application may be submitted. Although a letter of intent is not required, is not binding, and does not enter into the review of a subsequent application, it can help establish an early dialogue with NHGRI staff, and the information that it contains allows NHGRI staff to estimate the potential review workload and to avoid conflict of interest in the review.

The letter of intent is to be sent to: Jeffery A. Schloss Ph.D., Division of Extramural Research, National Human Genome Research Institute, Building 38A, Room 614, Bethesda, MD 20892–6050, Telephone: (301) 496–7531, FAX: (301) 480–2770, E-mail: Jeff__Schloss@nih.gov.

Application Procedures

The research grant application form PHS 398 (rev. 5/95) is to be used in applying for these grants. These forms are available at most institutional offices of sponsored research; from the Division of Extramural Outreach and Information Resources, National Institutes of Health, 6701 Rockledge Drive, MSC 7910, Bethesda, MD 20892–7910, telephone 301/435–0714, e-mail: ASKNIH@odrockml.od.nih.gov; and from the program administrator listed under Inquiries.

The RFA label available in the application form must be affixed to the bottom of the face page of the application. Failure to use this label could result in delayed processing of the application such that it may not reach the review committee in time for review. In addition, the RFA title and number must be typed on line 2 of the face page of the application form and the YES box must be marked.

Submit a signed, typewritten original of the application, including the Checklist, and three signed photocopies, in one package to: Division of Research Grants, National Institutes of Health, 6701 Rockledge Drive, Room 1040, Bethesda, MD 20892–7710, Bethesda, MD 20817 (for express/courier service).

At the time of submission, two additional copies of the application, including appendices, must also be sent to: Rudy Pozzatti, Ph.D, Office of Scientific Review, National Human Genome Research Institute, Building 38A, Room 613, Bethesda, MD 20892–6050.

Applications must be received by October 16, 1997. If an application is received after that date, it will be returned to the applicant without review. The Division of Research Grants (DRG) will not accept any application in response to this RFA that is essentially the same as one currently pending initial review, unless the applicant withdraws the pending application. The DRG will not accept any application that is essentially the same as one already reviewed. This does not preclude the submission of substantial revisions of applications already reviewed, but such applications must include an introduction addressing the previous critique. The applicants should also ensure that their revised applications respond to the review criteria by which applications received in response to this RFA will be evaluated.

Review Considerations

Upon receipt, applications will be reviewed for completeness by DRG and for responsiveness to the RFA by NHGRI program staff. Incomplete applications will be returned to the applicant without further consideration. If the application is not responsive to the RFA, NIH staff will contact the applicant to determine whether to return the application to the applicant or submit it for review in competition with unsolicited applications at the next review cycle.

Those applications that are complete and responsive will be evaluated for scientific and technical merit in accordance with the criteria stated below by an appropriate peer review group convened by the NHGRI. As part of the initial merit review, all applications will receive a written critique and may undergo a process in which only those applications deemed to have the highest scientific merit will be discussed and assigned a priority score. All applications will receive a second level of review by the National Advisory Council for Human Genome Research.

Review criteria will include:

Scientific and technical merit of the proposed research;

Potential of the proposed technology to achieve the cost and quality goals of this RFA;

Appropriateness and adequacy of the experimental approach and methodology proposed to carry out the research;

Adequacy with which critical technical issues have been identified, and solutions proposed;

Appropriateness of the timeline and milestones established by the investigator to ensure continued progress toward the specific aims, and adequacy of the specific benchmarks proposed for measuring progress toward the milestones;

Adequacy of plans to integrate the proposed technology with other components of a process required to accomplish DNA sequencing;

Qualifications and research experience of the principal investigator and staff in the area of the proposed research;

Availability of the resources necessary to perform the reseach;

Adequacy of plans for dissemination of technical advances and software tools developed under grant support:

Appropriateness of the proposed budget and duration in relation to the proposed research; and

Adequacy of plans to protect human subjects and to include women and minorities, if applicable.

For R21 applications, preliminary data are not required. However, the applicant does have the responsibility for developing a sound research plan and for presenting any other information that can be considered as evidence of feasibility.

Award Criteria

Factors that will be used to make award decisions are:

Quality of the proposed project as determined by peer review:

Balance among the projects received in response to the RFA in addressing different experimental approaches and their complementarity to other ongoing efforts, and value of the proposed research for achieving the goals of the National Human Genome Research Institute;

Adequacy of plans to manage and share data, resources and technology in a timely manner; and

Availability of funds.

Inquiries

Inquiries concerning this RFA are encouraged. The opportunity to clarify any issues or questions from potential applicants is welcome.

Direct inquiries regarding programmatic issues to: Jeffery A. Schloss, Ph.D., Division of Extramural Research, National Human Genome Research Institute, Building 38A, Room 614, Bethesda, MD 20892–6050, Telephone: (301) 496–7531, FAX: (301) 480–2770, E-mail: Jeff__Schloss@nih.gov.

Direct inquiries regarding fiscal matters to: Ms. Jean Cahill, Grants Management Office, National Human Genome Research Institute, Building 38A, Room 613, Bethesda, MD 20892–6050, Telephone: (301) 402–0733, FAX: (301) 402–1951, E-mail: Jean__Cahill@mih.gov.

Authority and Regulations

This program is described in the Catolog of Federal Domestic Assistance No. 93.172. Awards are made under authorization of the Public Health Service Act, Title IV, Part A (Pub. L. 78–410, as amended by Public Law 99–158, 42 U.S.C. 241 and 285) and administered under PHS grants policies and Federal Regulations 42 CFR 52 and 45 CFR part 74. This program is not subject to the intergovernmental review requirements of Executive Order 12372 or Health Systems Agency review.

The PHS strongly encourages all grant recipients to provide a smoke-free workplace and promote the non-use of all tobacco products. In addition, Public Law 103–227, the Pro-Children Act of 1994, prohibits smoking in certain facilities (or in some cases, any portion of a facility) in which regular or routine education, library, day care, health care or early childhood development services are provided to children. This is consistent with the PHS mission to protect and advance the physical and mental health of the American people.

(Catalogue of Federal Domestic Assistance Program No. 93.172, Human Genome Research)

Elke Jordan,

Deputy Director.

[FR Doc. 97–15744 Filed 6–13–97; 8:45 am]

BILLING CODE 4140–01–M

DEPARTMENT OF HEALTH AND HUMAN SERVICES

National Institutes of Health

National Cancer Institute; Notice of Meeting of the National Cancer Advisory Board and Its Subcommittees

Pursuant to Pub. L. 92–463, notice is hereby given of the meeting of the National Cancer Advisory Board, National Cancer Institute, and its Subcommittees on June 16–18, 1997. The meetings of the Board and its Subcommittees will be open to the public as indicated below. Attendance by the public will be limited to space available.

A portion of the Board meeting will be closed to the public in accordance with the provisions set forth in secs. 552b(c)(4), 552b(c)(6), and 552(c)(9)(B), Title 5, U.S.C and sec. 10(d) of Public Law 92–463, for the review, discussion and evaluation of individual grant applications and for discussion of issues pertaining to programmatic areas and/or NCI personnel. These applications and discussions could reveal confidential trade secrets or commercial property such as patentable material, and personal information concerning the individuals associated with the applications or programs, the disclosure of which would constitute a clearly unwarranted invasion of personal privacy and premature disclosure of recommendations which would inhibit the final outcome and subsequent implementation of recommendations.

The Committee Management Office, National Cancer Institute, National Institutes of Health, Executive Plaza North, Room 630E, 6130 Executive Boulevard, MSC 7410, Rockville, Maryland 20892–7410, (301) 496–5708 will provide summaries of the meetings and rosters of the Board members, upon request.

Individuals who plan to attend and need special assistance, such as sign language interpretation or other reasonable accommodations, should contact Mrs. Linda Quick-Cameron, Committee Management Officer, at (301) 496–5708 in advance of the meeting.

Name of Committee: Subcommittee on Cancer Centers.

Contact Person: Dr.Brian Kimes, Executive Secretary, National Cancer Institute, NIH, Executive Plaza North, Room 502, 6130 Executive Blvd., MSC 7383, Bethesda, MD. 20892–7383, (301) 496–8537.

Date of Meeting: June 16, 1997.

Place of Meeting: Renaissance Mayflower Hotel, 1127 Connecticut Avenue, NW., Rhode Island Room, Washington, D.C. 20012.

Open: 7:00 p.m. to 8:00 p.m.

Agenda: To discuss policies and procedures of cancer programs.

Name of Committee: Ad Hoc Subcommittee on Clinical Trials.

Contact Person: Dr. Robert Wittes, Executive Secretary, National Cancer Institute, NIH, 9000 Rockville Pike, Bldg 31, Room 3A44, Bethesda, MD. 20892–2440, (301) 496–4291.

Date of Meeting: June 16, 1997.

Place of Meeting: Renaissance Mayflower Hotel, 1127 Connecticut Avenue, N.W., Pennsylvania Room, Washington, D.C. 20012.

Open: 8:00 p.m. to 9:30 p.m.

Agenda: To discuss NCAB resolutions relating to Managed Care and the NCAB resolutions and Draft Bypass Budget section relating to Clinical Research.

Name of Committee: Subcommittee on Planning and Budget.

Contact Person: Ms. Cherie Nichols, Executive Secretary, National Cancer Institute, NIH, 7550 Wisconsin Avenue, Room 312, MSC 9010, Bethesda, MD. 20892–9010, (301) 496–5515.

Date of Meeting: June 17, 1997.

Place of Meeting: Building 31, Conference Room 10/C Wing, National Institutes of Health, 9000 Rockville Pike, Bethesda, MD. 20892.

Open: 12:25 p.m. to 1:35 p.m.

Agenda: To discuss the NCI Budget and various planning issues.

Name of Committee: Subcommittee on Special Actions for Grants

Contact Person: Dr. Marvin R. Kalt, Executive Secretary, National Cancer Institute, NIH, Executive Plaza North, Room 600, 6130 Executive Blvd., MSC 7410, Bethesda, MD. 20892–7410, (301) 496–5147.

Date of Meeting: June 17, 1997.

Place of Meeting: Building 31, Conference Room 10/C Wing, National Institutes of Health, 9000 Rockville Pike, Bethesda, MD. 20892.

Closed: 3:45 p.m. to Adjournment.

Agenda: For review and discussion of grant applications and extramural/intramural, programmatic and personnel policies.

Name of Committee: National Cancer Advisory Board.

Contact Person: Dr. Marvin R. Kalt, Executive Secretary, National Institutes of Health, NIH, Executive Plaza North, Room 600, 6130 Executive Blvd., MSC 7410, Bethesda, MD. 20892–7410, (301) 496–5147.

Dates of Meeting: June 17–18, 1997.

Place of Meeting: Building 31, Conference Room 10/C Wing, National Institutes of Health, 9000 Rockville Pike, Bethesda, MD. 20892.

Open: June 17 8:30 a.m. to 3:20 p.m., June 18 8:30 a.m. to 1:30 p.m.

Agenda: Report of the Director, National Cancer Institute; Legislative Update; Report of the President's Cancer Panel; Topics for the National Cancer Policy Board; Report of the Prevention Program Review Group; New Initiatives in Communication; NCAB Outreach Activities; 25th Anniversary of the National Cancer Act; Subcommittee Reports; discussion of NCI Budget; Mini-Symposium; Managed Care's Impact on Clinical Investigations; Cancer Surveillance Update; Mammography Update; Future Research; Proposed Modifications of NIH Review and Award Policies; Office of Liaison Activities and other Council business.

This notice is being published less than 15 days prior to the meeting due to the urgent need to meet timing limitations imposed by the review and funding cycle.

(Catalog of Federal Domestic Assistance Program Numbers: (93.393, Cancer Cause and Prevention Research; 93.392, Cancer Detection and Diagnosis Research; 93.394, Cancer Treatment Research; 93.396, Cancer Biology Research; 93.397, Cancer Centers Support; 93.398, Cancer Research Manpower; 93.399, Cancer Control)

Dated: June 11, 1997.

LaVerne Y. Stringfield,

Committee Management Officer, NIH.

[FR Doc. 97–15740 Filed 6–13–97; 8:45 am]

BILLING CODE 4140–01–M

DEPARTMENT OF HEALTH AND HUMAN SERVICES

National Institutes of Health

National Heart, Lung, and Blood Institute; Notice of Closed Meetings

Pursuant to Section 10(d) of the Federal Advisory Committee Act, as amended (5 U.S.C. Appendix 2), notice is hereby given of the following Heart,

Lung, and Blood Special Emphasis Panel (SEP) meetings:

Name of SEP: Host Factors Controlling Individual Susceptibility to HIV–Associated Pulmonary Disease.
Date: July 9, 1997.
Time: 8:00 a.m.
Place: Holiday Inn Chevy Chase, 5520 Wisconsin Avenue, Chevy Chase, Maryland 20815.
Contact Person: Anne Clark, Ph.D., Two Rockledge Center, Room 7186, 6701 Rockledge Drive, Bethesda, MD 20892–7924, (301) 435–0280.
Purpose/Agenda: To review and evaluate grant applications.

Name of SEP: Gene Transfer Principles for Heart, Lung, and Blood Diseases.
Date: July 9–11, 1997.
Time: 7:30 p.m.
Place: Doubletree Hotel Rockville, 1750 Rockville Pike, Rockville, Maryland 20852.
Contact Person: Ivan Baines, Ph. D., Two Rockledge Center, Room 7184, 6701 Rockledge Drive, Bethesda, MD 20892–7924, (301) 435–0277.
Purpose/Agenda: To review and evaluate grant applications.

These meetings will be closed in accordance with the provisions set forth in secs. 552b(c)(4) and 552b(c)(6), Title 5 U.S.C. Applications and/or proposals and the discussions could reveal confidential trade secrets or commercial property such as patentable material and personal information concerning individuals associated with the applications and/or proposals, the disclosure of which would constitute a clearly unwarranted invasion of personal privacy.

(Catalog of Federal Domestic Assistance Programs Nos. 93.837, Heart and Vascular Diseases Research; 93.838, Lung Diseases Research; and 93.839, Blood Diseases and Resources Research, National Institutes of Health)

Dated: June 10, 1997.

LaVerne Y. Stringfield,

Committee Management Officer, NIH.

[FR Doc. 97–15742 Filed 6–13–97; 8:45 am]

BILLING CODE 4140–01–M

DEPARTMENT OF HEALTH AND HUMAN SERVICES

National Institutes of Health

National Institutes of Child Health and Human Development; Notice of Closed Meeting

Pursuant to Section 10(d) of the Federal Advisory Committee Act, as amended (5 U.S.C. Appendix 2), notice is hereby given of the following National Institute of Child Health and Human Development Special Emphasis Panel (SEP) meeting:

Name of SEP: Center for Alternative Medicine in Women's Health (Teleconference).
Date: June 18, 1997.
Time: 11:00 a.m. (EST)—adjournment.
Place: 6100 Executive Boulevard, 6100 Building—Room 5E01, Rockville, Maryland 20852.
Contact Person: A.T. Gregoire, Ph.D., Scientific Review Administrator, NICHD, 6100 Executive Boulevard, 6100 Building—Room 5E01, Rockville, Maryland 20852, Telephone: 301–496–1485.
Purpose/Agenda: To evaluate and review a grant application.

The meeting will be closed in accordance with the provisions set forth in secs. 552b(c)(4) and 552b(c)(6), Title 5, U.S.C. The discussions of this application could reveal confidential trade secrets or commercial property such as patentable material and personal information concerning individuals associated with the application, the disclosure of which would constitute a clearly unwarranted invasion of personal privacy.

This notice is being published less than 15 days prior to the meeting due to the urgent need to meet timing limitations imposed by the review and funding cycle.

(Catalog of Federal Domestic Assistance Program Nos. [93.864, Population Research and No. 93.865, Research for Mothers and Children, National Institutes of Health)

Dated: June 10, 1997.

LaVerne Y. Stringfield,

Committee Management Officer, NIH.

[FR Doc. 97–15741 Filed 6–13–97; 8:45 am]

BILLING CODE 4140–01–M

DEPARTMENT OF HEALTH AND HUMAN SERVICES

National Institutes of Health

National Institute of Mental Health; Notice of Closed Meetings

Pursuant to Section 10(d) of the Federal Advisory Committee Act, as amended (5 U.S.C. Appendix 2), notice is hereby given of the following meetings of the National Institute of Mental Health Special Emphasis Panel:

Agenda/Purpose: To review and evaluate grant applications.
Committee Name: National Institute of Mental Health Special Emphasis Panel.
Date: June 30, 1997.
Time: 10:30 a.m.
Place: Parklawn, Room 9C–26, 5600 Fishers Lane, Rockville, MD 20857.
Contact Person: Phyllis D. Artis, Parklawn, Room 9C–26, 5600 Fishers Lane, Rockville, MD 20857, Telephone: 301, 443–6470.

Committee Name: National Institute of Mental Health Special Emphasis Panel.
Date: July 2, 1997.
Time: 3 p.m.
Place: Parklawn, Room 9C–26, 5600 Fishers Lane, Rockville, MD 20857.
Contact Person: Jean G. Noronha, Parklawn, Room 9C–26, 5600 Fishers Lane, Rockville, MD 20857, Telephone: 301, 443–6470.

The meetings will be closed in accordance with the provisions set forth in sections 552b(c)(4) and 552b(c)(6), Title 5, U.S.C. Applications and/or proposals and the discussions could reveal confidential trade secrets or commercial property such as patentable material and personal information concerning individuals associated with the application and/or proposals, the disclosure of which would constitute a clearly unwarranted invasion of personal privacy.

This notice is being published less than fifteen days prior to the meetings due to the urgent need to meet timing limitations imposed by the review and funding cycle.

(Catalog of Federal Domestic Assistance Program Numbers 93.242, 93.281, 93.282)

Dated: June 10, 1997.

LaVerne Y. Stringfield,

Committee Management Officer, NIH.

[FR Doc. 97–15743 Filed 6–13–97; 8:45 am]

BILLING CODE 4140–01–M

DEPARTMENT OF HEALTH AND HUMAN SERVICES

National Institutes of Health

National Institutes of General Medical Sciences; Amended Notice of Meeting

Notice is hereby given of a change in the meeting of National Institute of General Medical Sciences Minority Biomedical Research Support Subcommittee Special Emphasis Panel meeting, June 18, 1997, 2:00 p.m., Telephone Conference, Natcher Building, Bethesda, MD which was published in the **Federal Register** on June 6, 1997, **Federal Register** citation, 61 FR 31123.

The meeting will now be held June 19, 1997. The meeting is closed to the public.

Dated: June 11, 1997.

LaVerne Y. Stringfield,

Committee Management Officer, NIH.

[FR Doc. 97–15739 Filed 6–13–97; 8:45 am]

BILLING CODE 4140–01–M

DEPARTMENT OF HEALTH AND HUMAN SERVICES

National Institutes of Health

Division of Research Grants; Notice of Closed Meetings

Pursuant to Section 10(d) of the Federal Advisory Committee Act, as amended (5 U.S.C. Appendix 2), notice is hereby given of the following Division of Research Grants Special Emphasis Panel (SEP) meetings:

Purpose/Agenda: To review individual grant applications.
Name of SEP: Microbiological and Immunological Sciences.
Date: June 20, 1997.
Time: 8:30 a.m.

Place: Ramada Inn, Rockville, MD.

Contact Person: Dr. Gerald Liddel, Scientific Review Administrator, 6701 Rockledge Drive, Room 4186, Bethesda, Maryland 20892, (301) 435–1150.

This notice is being published less than 15 days prior to the above meeting due to the urgent need to meet timing limitations imposed by the grant review and funding cycle.

Name of SEP: Microbiological and Immunological Sciences.

Date: July 9, 1997.

Time: 7:30 p.m.

Place: Hyatt Regency Hotel, Arlington, VA.

Contact Person: Dr. Sami Mayyasi, Scientific Review Administrator, 6701 Rockledge Drive, Room 4194, Bethesda, Maryland 20892, (301) 435–1216.

Name of SEP: Chemistry and Related Sciences.

Date: August 14, 1997.

Time: 8:00 a.m.

Place: Hyatt Regency Hotel, Arlington, VA.

Contact Person: Dr. Richard Panniers, Scientific Review Administrator, 6701 Rockledge Drive, Room 5106, Bethesda, Maryland 20892, (301) 435–1166.

Purpose/Agenda: To review Small Business Innovation Research.

Name of SEP: Behavioral and Neurosciences.

Date: July 31, 1997.

Time: 8:30 a.m.

Place: Holiday Inn, Chevy Chase, MD.

Contact Person: Dr. Leonard Jakubczak, Scientific Review Administrator, 6701 Rockledge Drive, Room 5172, Bethesda, Maryland 20892, (301) 435–1247.

The meetings will be closed in accordance with the provisions set forth in secs. 552b(c)(4) and 552b(c)(6), title 5, U.S.C. Applications and/or proposals and the discussions could reveal confidential trade secrets or commercial property such as patentable material and personal information concerning individuals associated with the applications and/or proposals, the disclosure of which would constitute a clearly unwarranted invasion of personal privacy.

(Catalog of Federal Domestic Assistance Program Nos. 93.306, 93.333, 93.337, 93.393–93.396, 93.837–93.844, 93.846–93.878, 93.892, 93.893, National Institutes of Health, HHS)

Dated: June 11, 1997.

LaVerne Y. Stringfield,

Committee Management Officer, NIH.

[FR Doc. 97–15738 Filed 6–13–97; 8:45 am]

BILLING CODE 4140–01–M

DEPARTMENT OF HEALTH AND HUMAN SERVICES

Administration for Children and Families

Office of Refugee Resettlement's Fiscal Year 1997 Omnibus Discretionary Social Service Grants Program

AGENCY: Office of Refugee Resettlement (ORR), ACF, DHHS.

ACTION: Request for applications to support projects under the Office of Refugee Resettlement's Fiscal Year 1997 Omnibus Discretionary Social Service Grants Program for services to refugees.[1]

SUMMARY: This program announcement governs the availability of and award procedures for approximately $4,400,000 in FY 1997 Social Services discretionary grants. The Office of Refugee Resettlement (ORR) will accept competing applications for grants in three categories, pursuant to the Director's discretionary authority under section 412(c)(1) of the Immigration and Nationality Act (INA), as amended by section 311 of the Refugee Act of 1980 (Pub. L. 96–212), 8 U.S.C. 1522(c); section 501(a) of the Refugee Education Assistance Act of 1980 (Pub. L. 96–422), 8 U.S.C. 1522 note, insofar as it incorporates by reference with respect to Cuban and Haitian entrants the authorities pertaining to assistance for refugees established by section 412(c) of the INA, as cited above; and the Refugee Assistance Extension Act of 1986 (Pub. L. 99–605).

Applications may be submitted in Category One for naturalization and citizenship programs. Category Two, Part I consists of microenterprise programs; Part II is for one technical assistance provider to serve ORR microenterprise grantees. Category Three is for technical assistance providers in three program areas: (1) Refugee Employment, (2) Refugee Elderly Services, and (3) Welfare and Immigration Reform Impact.

Applicants may request a project period of up to three years, with an initial budget period of one year. Where awards are for multiple year project periods, applications for continuation grants will be entertained in subsequent years on a non-competitive basis, subject to availability of funds, successful progress of the project, and ACF's determination that this would be in the best interest of the government. This announcement contains forms and instructions for submitting an application.

CLOSING DATE: The closing dates for submission of applications is August 15, 1997. Applications received after the closing date will be classified as late and will not be considered in the current competition.

FOR FURTHER INFORMATION REGARDING THIS ANNOUNCEMENT, CONTACT: Anna Mary Portz, telephone (202) 401–1196, or e-mail aportz@acf.dhhs.gov.

For further information regarding Category One, Citizenship, contact: Nguyen T. Kimchi at (202) 401–4556 or Nkimchi@acf.dhhs.gov.

For further information regarding Category Two, Microenterprise, contact: Marta Brenden at (202) 205–3589 or mbrenden@os.dhhs.gov.

For Category Three, Program Area One, Employment Technical Assistance, contact: Carolyn V. Plummer at (202) 401–5449 or Kathy Do at (202) 401–4579.

For Category Three, Program Area Two, Elderly Technical Assistance, contact: Nguyen T. Kimchi at (202) 401–4556, e-mail Nkimchi@acf.dhhs.gov or Bill McPherrin at (202) 401–5429, bimcpherrin@acf.dhhs.gov.

For Category Three, Program Area Three, Welfare and Immigration Reform Technical Assistance, contact: Anna Mary Portz as above.

You may address correspondence to the contact persons as follows: Office of Refugee Resettlement, Administration for Children and Families, 370 L'Enfant Promenade, S.W. 6th Floor, Washington, D.C. 20447.

SUPPLEMENTARY INFORMATION:

Legislative Authority

Section 412(c)(1)(A) of the INA authorizes the Director ''to make grants to, and enter into contracts with, public or private nonprofit agencies for projects specifically designed—(i) to assist refugees in obtaining the skills which are necessary for economic self-sufficiency, including projects for job training, employment services, day care, professional refresher training, and

[1] In addition to persons who meet all requirements of 45 CFR 400.43, eligibility for refugee social services also includes: (1) Cuban and Haitian entrants, under section 501 of the Refugee Education Assistance Act of 1980 (Pub. L. No. 96–422); (2) certain Amerasians from Vietnam who are admitted to the U.S. as immigrants under section 584 of the Foreign Operations, Export Financing, and Related Programs Appropriations Act, 1988, as included in the FY 1988 Continuing Resolution (Pub. L. No. 100–202); and (3) certain Amerasians from Vietnam, including U.S. citizens, under title II of the Foreign Operations, Export Financing, and Related Programs Appropriations Act, 1989 (Pub. L. No. 100–461), 1990 (Pub. L. No. 101–167) and 1991 (Pub. L. No. 101–513). For convenience, the term ''refugee'' is used in this notice to encompass all such eligible persons unless the specific context indicates otherwise.

other recertification services; (ii) to provide training in English where necessary (regardless of whether the refugees are employed or receiving cash or other assistance); and (iii) to provide where specific needs have been shown and recognized by the Director, health (including mental health) services, social services, educational and other services.'' Furthermore, Section 412(a)(4)(A)(i) of the INA states: ''* * * the Director [of ORR is]* * *authorized—to make loans'' for the purpose of carrying out this section.

Eligible Applicants

Eligible applicants are States and other public or private, nonprofit organizations and institutions.

Background

As with all programs funded by appropriations pursuant to the Refugee Act, services may be provided only to refugees (see definition in footnote 1, above) and may not be provided to refugees who have become citizens (except for those Amerasians listed in footnote 1).

Coalitions

For Category One (naturalization and citizenship program), and Category Two, Part I (microenterprise program), organizations, which have not already done so, are encouraged to build coalitions to apply under this announcement to design and implement these programs. The activities funded by these grants are intended to serve as a catalyst to bring the community together to address the economic and social problems of refugee families and communities. The goal in all cases should be to build and strengthen the community's capacity to serve its members in improving the quality of life and standard of living for refugee families. While activities proposed do not have to be directly related to employment, applicants should be guided by the overarching goal of improving the economic condition of refugee families and of gearing them to adjust socially and economically to their new country and their new communities.

This announcement strongly encourages partnerships or consortia of two or more eligible organizations to submit joint applications for grants. For each coalition, the *one* organization submitting the application will be identified as the primary grant recipient (grantee) with administrative and fiscal responsibilities. Applications from consortia which do not clearly specify which organization will serve as grantee *cannot be considered*. In all cases the applicant must demonstrate that wherever potential partners for collaboration exist, the applicant, at a minimum, has planned the proposed activities in collaboration with these potential partners, whether they are in the refugee services provider community of organizations and institutions or in mainstream services organizations, e.g., adult basic education providers, senior citizens organizations. Consultation might also include the Mayor's office, school parent-teacher groups, local police departments, and other mainstream community service organizations.

The emphasis on coalitions notwithstanding, ORR will not fund projects where the role of the applicant is primarily to serve as a conduit for funds to organizations other than the applicant.

Service Compatibility

Applicants are more likely to be successful in obtaining a grant if they describe the refugee community, family, and service capacity concerns under consideration. It should be clear how the proposed activity fits into the existing network of services; how it responds to the particular needs of families in that community or to a broader need of the community; who is committed to do what, in order to accomplish this goal; and what the expected outcomes of the activity will be.

The process of coalition-building is key to strengthening cooperation and coordination among the local service providers, community leaders, Mutual Assistance Associations, voluntary agencies, churches, and other public and private organizations involved in refugee resettlement and/or community service. ORR intends that this process will be part of local efforts to build strategic partnerships among these groups to expand their capacity to serve the social and economic needs of refugees and to give support and direction to ethnic communities facing problems in economic independence and social adjustment.

In all cases, and regardless of the type of organization designated to provide services or conduct activities funded under this announcement, organizations should consider and describe how the services/activities will be linguistically and culturally compatible with the refugee families or communities to be served. In addition, the applicant must describe how proposed providers will have access to the families and to the community to be served.

Availability of Funds

Approximately $4.4 million will be awarded in FY 1997 through this Omnibus Announcement. ORR expects to make available $3,000,000 in FY 1997 discretionary funds for Category One: Naturalization and Citizenship programs, and anticipates that awards will range from $50,000 to $250,000 per budget period. In Category Two: Microenterprise, Part I, ORR expects to make 5–6 individual new grant awards to total approximately $750,000; in Part II, there will be a single award anticipated at $100,000. In Category Three: Technical Assistance, ORR anticipates one award each of $150,000 in Program Areas One and Two, Employment and Elderly Services respectively, and one award of $250,000 in Program Area Three, Impact of Welfare and Immigration Reform on Refugees and Refugee Communities.

The Director reserves the right to award less, or more, than the funds described, in the absence of worthy applications, or under such other circumstances as may be deemed to be in the best interest of the government. Applicants may be required to reduce the scope of selected projects to accommodate the amount of the approved grant award.

Length of Application

Applicants are encouraged to limit program narratives (see Part C. under each category below) to *20 pages* (typewritten, double spaced on standard, letter-size paper) *plus no more than 20 pages of appended material.* This limitation of 20 pages per component should be considered as a *maximum*, and not necessarily a goal to be achieved.

Category One: Naturalization and Citizenship

A. Purpose and Scope

A refugee's resettlement in this country is not completed until he or she becomes a full fledged participant in an American community. Naturalization marks the beginning of the process for refugees to become fully participating members of their new country. Most refugees eventually become citizens after meeting their residency requirement. However, older refugees, and refugees who are not literate in their own language, often have difficulty meeting the English language and civics requirements of the naturalization process. Citizenship preparation classes currently available at local educational institutions often require an English proficiency that many refugees do not possess.

The purpose of this grant program is to provide support for citizenship education and application programs for refugees who have met or are within one year of meeting the residency requirement to become citizens. ORR is particularly interested in helping refugees who are hard to reach for existing citizenship services and who have had historically low rates of naturalization because of language, cultural, or other barriers. These include pre-literate refugees, elderly refugees who are non-English speakers and refugees with limited English and/or literacy skills. Refugees with strong English proficiency who need civics instruction may be served under these programs, but are considered a lower priority.

Refugees eligible for services in this program must have no more than one year remaining to meet residency requirements for naturalization. For most refugees, this equates to at least four years residency since arrival in the U.S., or two years in the case of refugees who are married to U.S. citizens.

ORR encourages refugees to participate in citizenship and naturalization programs that are generally available in metropolitan areas. However, ORR also recognizes that there is a need for specialized programs to meet the needs of underserved refugees. ORR encourages collaboration among service providers to ensure that these at-risk refugees can access the citizenship preparation services appropriate to their background and level of education.

These funds may be used for services designed to reach refugees who have not traditionally availed themselves of mainstream programs because they either do not understand the significance of citizenship or need specialized services.

The program is intended:

- To provide outreach and information to eligible, vulnerable refugee groups, such as older refugees, pre-literate refugees, homebound women, and others with special needs in the naturalization process, and to educate them on the rights and responsibilities of citizenship.
- To provide enhanced English language training and civics instruction for pre-literate refugees and refugees with limited literacy skills to help them qualify for citizenship.
- To provide citizenship application assistance for qualified refugees and to eliminate barriers to citizenship for vulnerable groups of refugees.
- To promote naturalization by encouraging cooperative working relationships among local public, private and community-based organizations such as refugee mutual assistance associations (MAAs), States, and the Immigration and Naturalization Service, U.S. Department of Justice (INS).
- To assist service providers in securing *pro bono* legal and/or medical services and other volunteer services, as necessary, for successful attainment of citizenship.

To the extent that a project charges fees or earns income related to a grant in the citizenship/naturalization program, such program income may be retained by the project grantee so long as these costs further the objectives of the grant in accordance with 45 CFR 74.24(b)(1) or 92.25(g)(2).

B. Allowable Services

ORR will consider applications for services which are based on an analysis of citizenship service needs and available resources. Allowable services are those not readily available to refugees in the community especially the underserved groups of refugees e.g., the elderly, refugees not literate in their own language, and homebound refugees. Activities and services proposed should be planned in conjunction with existing services and should supplement and complement these services. Special attention should be given in the planning process to the citizenship and naturalization services available to other immigrants in the community, including those designed for immigrants with similar background as refugees.

In most large States and metropolitan areas, refugee and immigrant forums have already assessed citizenship service needs. Applicants are advised to consult with these forums or with their State refugee office to examine these assessments and to submit them as supportive documentation for their proposed program.

Examples of allowable activities are:

- Provision for innovative programs to reach underserved refugee groups for citizenship activities.
- Provision for creatively designed English language training and civics instruction appropriate for pre-literate refugees and refugees with limited literacy skills.
- Assistance in the submission of the N–400 application for citizenship and in meeting related requirements or referral to appropriate partner organizations.
- On-site training and/or mobile processing services for refugees who have difficulty accessing citizenship preparation classes in order to prepare for the qualifying examination to become naturalized U.S. citizens.
- Removal of barriers to citizenship through the formation of peer support groups to coordinate transportation, child care and other support services necessary for increasing participation in citizenship/naturalization activities.
- Preparation for the naturalization interview, interpreting and translating services for citizenship interviews when necessary and where such services are not available through the INS or other agencies.
- Coordination with local school districts, legal aid societies, medical professionals, corporate enterprises and foundations to leverage in-kind or cost-sharing contributions to the program.
- Developing and maintaining working partnerships between local public, private nonprofit and community-based organizations (e.g., MAAs), and States and the INS.

C. Program Narrative

All applicants should address the following in their applications for financial assistance.

1. Objectives and Need for Assistance

State the objectives for the program and indicate how they relate to the provision of services in helping refugees to obtain citizenship through naturalization. Demonstrate that the need for the program is based on an assessment of the community's refugee population and consultation with refugees and refugee service providers. Provide letters of support for the proposed program from community leaders and residents—particularly those involved with refugees and the special populations to be served. If the applicant proposes to initiate a new program in an area where no other organizations serve refugees, and a coalition with other organizations is not possible, this should be explained and documented.

Identify the population(s) to be served by the project and explain why this population is most in need of the program. Identify the intended enrollment size (number of elderly refugees, their ethnicity, etc.).

Describe any citizenship services and resources which are available in the area to serve the refugee population(s) and how those which are proposed will complement the existing network.

2. Approach and Results or Benefits Expected

Describe the method used to involve and consult with potential consumers (i.e., older and homebound refugees, refugee women) that caused the applicant to conclude that there is a need for a special program to serve the

proposed target population(s). Applicants must describe what will be done during the start-up period to prepare for implementation.

Describe what services the program will provide, either directly or through referral, to promote citizenship and naturalization.

Explain the approach to recruiting and enrolling underserved refugees and identify the target recruitment area.

Explain how the applicant intends to coordinate the program with other service providers, MAAs, and other community-based organizations providing citizenship services to avoid duplication.

Describe how the program will develop relationships with the local INS district office or other organizations that are authorized by INS to provide naturalization services such as, test administration, finger printing, etc.

Describe what assistance the program will provide to refugees with special needs such as older and disabled refugees in order to enable them to participate in the citizenship education program. Identify the existing transportation resources available to refugees in reaching services provided at the program site and in off-site locations.

Identify the specific results or benefits that could be expected for refugees participating in the program, by qualitative and quantitative data measuring outcomes and progress toward stated results or benefits, (e.g. how many completed the program; how many submitted applications to INS; how many passed the civics test?).

Provide assurances that the program will collect data on groups of refugees served (age, sex, etc.), types of services to be furnished (English and citizenship education, citizenship application, information and referral, etc.), service utilization information, types and nature of needs identified and met, and such other information as may be required periodically for purposes of evaluation.

Describe how the lessons learned from the program will benefit national policy, practice, theory and/or research.

3. Organizational Capability

Provide a description of the applicant's organization and document its non-profit status. Describe the applicant's experience in providing citizenship services to refugees and immigrants as well as the applicant's experience in collaborating with refugee service providers and ethnic organizations.

Identify and provide a brief description of key staff who are proposed to work in the program and indicate their educational training and experience working with refugees and citizenship education programs/services. Describe staffing patterns and staff qualifications and language/cultural competencies. Explain how the ethnic composition and language proficiency of particular staff persons are reflective of the community.

Provide assurances that the applicant will cooperate with an evaluation contractor and any other contractor ORR may fund to evaluate and assess the effectiveness of the program.

4. Budget

Provide a line item budget with detailed narrative justification. Applicants who request indirect charges must attach a copy of the organization's current negotiated indirect cost agreement. If the applicant does not have a negotiated indirect cost agreement with any agency of the federal government, all costs must appear in the budget as direct charges.

Provide documented assurance that:

- Federal funds awarded under this grant program will not be used to reimburse clients for any fees paid to INS.
- Funds awarded under this grant program will not duplicate naturalization and citizenship activities already funded by another source. These funds will not be used to offset funding otherwise available for citizenship activities.
- None of the funds awarded under this announcement will be used for the development of new materials where existing materials have already been developed to an acceptable standard. Applicants are reminded to secure permission to use materials developed by national organizations experienced in citizenship activities.

D. Review Criteria

Each project proposal will be rated and scored by an independent review panel using criteria described below. State applicants which plan to contract for services must submit detailed proposals of their approach and identify the subcontractors or provide a description of the contractual award process and projected timelines. State applicants must assure ORR that sub-grantees will abide by the same requirements as direct ORR grantees in this program.

1. Demonstration of how the program—working collaboratively—will meet the need for citizenship services of the target refugees through direct services and/or through leveraging existing community resources. Reasonableness of the project activities and timeline for meeting the proposed objectives. 25 points

2. Quality of the innovative program to meet the needs of the underserved population in reducing barriers to citizenship to enable them to become citizens within a short time frame. Extent to which the expected results and benefits of the project are appropriate and reasonable. 35 points

3. Demonstration of the applicant's qualified records of good performance in citizenship activities. Quality of proposed staff, appropriateness of the staff selection in relation to the proposed activities and the characteristics of the target population. 20 points

4. The budget is reasonable, clearly presented, sufficiently detailed, and demonstrates a cost-effective use of federal funds. 20 points

Total: 100 points.

Category Two, Part I: Microenterprise Development

A. Purpose and Scope

The purpose of these funds is to use microenterprise development to enable refugees to increase household income and thereby decrease their likelihood of relying on public assistance. For purposes of participation in a program, there is no limitation on the number of years a refugee may have been in the U.S. as long as he/she has not become a naturalized citizen at the time of enrollment in the project. Projects should be designed in a manner that is linguistically and culturally appropriate for the target population; additionally, projects may not exclude an individual or group of refugees on the basis of ethnicity.

B. Allowable Activities

Funds may be used to provide business technical assistance, business training, credit in the form of microloans, and/or for the administrative costs of managing the project and a microloan fund to assist refugees in starting or expanding microbusinesses. Training may be conducted in classes, in small groups or with individuals. Ongoing technical assistance should be available to participants for up to the first year following the business start-up.

Microloans: Consist of small amounts of credit, generally in sums less than $10,000, extended to low-income entrepreneurs for start-up of microenterprises. Microloans may also be available for micro-business expansions. Refugee borrowers who

may benefit from agency-based revolving loan funds typically have few personal assets or savings and do not qualify for commercial loans. Microloans may be made available to clients through a partnership with commercial banks or other traditional lending institutions. Federal funds may also be used as guarantees or leverage for commercial loans. In any case, ORR encourages the use of current market rates of interest which may be charged up to four percentage points above the New York Prime lending rate at the time of the loan approval. Microloans will have a maximum maturity of three years.

Applicants who propose to administer a microloan fund, in which some or all of the available capital comes from ORR grant funds, must use a *revolving* loan fund to disperse these loans. ORR grant funds for a revolving loan fund will be capped for all new grantees at $50,000 for the first budget period. Program income in the form of interest (on individual loans or from loan loss reserves) may be retained by the agency project so long as these costs further the objectives of the grant and the Federal statute under which the grant was made. Program income of this type may be used to expand the number of microloans to be made available to the participants in accordance with 45 CFR 74.24 (b)(1), (b)(2), and (e) or 92.25 (b), (g)(2), and (h). The microenterprise grantee may not charge fees, points, or other amounts to the individual borrower applying for a microloan other than actual costs associated with obtaining, approving and closing the approved microloan. Additionally, individual borrowers may not be solicited for contributions toward the cost of training or technical assistance received under this program.

Technical Assistance for Projects: To ensure the exchange of technical and training information among ORR microenterprise program grantees, all grantees are strongly encouraged to attend two training conferences during each year of their participation in the program. Grant funds may be used to offset the cost of attendance. Also, ORR is currently announcing the availability of funds for a technical assistance provider for refugee microenterprise projects which will be available for ORR grantees (see Part II of this Category).

C. Program Narrative

Applications to the ORR microenterprise program announcement should describe the following:

1. Statement of Need

The capital needs and capital market gaps for refugee microentrepreneurs in their community, and how they will gain access to credit through this project.

A profile of prospective refugee participants, including: an annotated list describing ethnicities for the target population, their status with respect to welfare usage and employment; refugees' qualifying income and length of time in the U.S.; and prospective clients' interest in microenterprise.

Any eligibility requirements related to English language proficiency that will be required of refugee participants.

2. Program Strategy

Describe the structure and approach of the project including, the form and duration of business training and/or technical assistance to refugee entrepreneurs; where appropriate, provisions for individual or group-based lending; whether the business targets are start-ups, expansions, or both; affiliated agencies; credit enhancements, such as loan loss reserves, and fees.

ORR encourages partnerships with other appropriate organizations for training and loans. Refugee ethnic communities frequently have non-eligible members (naturalized U.S. citizens and immigrants) who will also be likely candidates for microenterprise services, but will not be eligible clients for services funded by ORR. For that reason, ORR suggests that applicants seek to establish partnerships with commercial banks and other traditional lending institutions; seek funds from other federal and state government microenterprise programs, and private sources to fund training and microloans for clients not otherwise eligible for ORR funded services.

If the program strategy includes a microloan program, the application must describe the sources and amounts of lending capital, the anticipated size of the loan fund, its terms, and the activities for which loans may be used; the lending criteria for borrowers, and mechanism of approval/disapproval; and a monthly revolving loan cash flow chart for the three year period beginning October 1, 1997.

3.a. Organizational Capability

The application must include a description of the applicant's organizational structure, copies of the financial statements for the last two years, balance sheets and income statements, the plan for fiscal and project management, a time table for activities, a project organization chart, a description of staffing, and resumes or qualifications of staff.

Those applicants to this announcement who have previously operated refugee microenterprise projects with training and microloans should describe in some detail their accomplishments under prior projects. The description should provide a project description, annotated list of refugee ethnic groups, recruitment strategies, training classes or other training methods, and performance outcomes in terms of number of clients, number of loans and an analysis of size and payment history, and performance measures such as number of business starts and expansions for each of the project's budget periods.

If a revolving loan fund is part of this application, describe in detail the management activities with respect to the loans: loan application forms and criteria for approval, microenterprise activities for which loans may be used, management and servicing of the loan funds, a discussion of the applicants' lending history, loan repayment terms, projected default rates, and projected schedule for local collection.

3.b. Project Management

Applicant must provide details on the management and operation of the project and of the loan funds; a description of project staff credentials including cultural and linguistic appropriateness; and, staff supervision plan; and the design of program progress reports.

4. Performance Outcome Measures

Performance measures that will demonstrate the impact of the project on the participants, and whether the purpose of the microenterprise project is met.

5. Budget

A line-item budget that coincides with the SF 424 object class categories and provides sufficient detail. In an accompanying section, submit a narrative justification that explains each budget category. Applicants who request indirect charges must attach a copy of the organization's current negotiated indirect cost agreement. If the applicant does not have a negotiated indirect cost agreement with any agency of the federal government, all costs must appear in the budget as direct charges.

D. Review Criteria

Grant applications for microenterprise development will be reviewed and ranked against the following criteria:

1. A description of the purposes for which funding is proposed; the

appropriateness of the project (design, policies and procedures) to the entrepreneurial experience, capital needs, and English language proficiency of the targeted refugee community. 20 points

2. The appropriateness of the project structure and approach, including design for training and/or technical assistance, lending, credit enhancements, and affiliates. 20 points

3. Demonstrated organizational and management capacity and history of experience with microenterprise development for refugees or other economically disadvantaged populations. 20 points

4. Extent to which the expected outcomes are appropriate, consistent with reported nationwide performance in microenterprise projects, and reasonable for the size of the targeted population. 20 points

5. Appropriateness and reasonableness of the proposed budget, including the relative distribution of funds for administrative costs, training or technical assistance, loan capital, and unit costs. Applicant should include project timelines and a narrative justification supporting each budget line. 20 points

Category Two, Part II: Assistance to Intermediary Microenterprise Grantee Agencies

ORR intends that microenterprise programs will have access to technical assistance and existing materials in the design and implementation of these projects. To that end, ORR will award one grant in an amount not to exceed $100,000 to a private, non-profit agency for the purpose of assisting grantees in the administration of projects and microloan funds, in the development of appropriate financial systems for administering these projects, and for securing additional financing for microloans through non-federal sources. Grantees will be given access to standardized documents, policies, and procedures that have been developed or gathered under this initiative. Interested organizations should submit an application package, in accordance with instructions stated below in ''Application Preparation and Submission,'' including the following:

—A description of the applicant's organizational structure, staff qualifications, experience in microenterprise development, and expertise in business management principles, the operation of revolving loan funds, and/or experience in leveraging commercial funds.

—A narrative description of technical assistance activities for approximately 12 grantee agencies, with a timetable and schedule for site-visits and related reports.

—A line-item budget and budget narrative (applicants who request indirect charges must attach a copy of the organization's current negotiated indirect cost agreement. If the applicant does not have a negotiated indirect cost agreement with any agency of the federal government, all costs must appear in the budget as direct charges).

Applications for the technical assistance grant will be reviewed competitively and scored by a review panel of experts in accordance with the criteria stated below:

—Organizational expertise and history of experience in microenterprise development and in providing technical assistance and training to intermediary agencies. 40 points

—Clarity and appropriateness of the project design for technical assistance. 30 points

—Reasonableness and appropriateness of the proposed budget. 30 points

Category Three: Technical Assistance

Program Area One: Technical Assistance to Refugee Employment Service Providers

A. Purpose and Availability of Funds

The primary goal of refugee resettlement is to assist refugees to become economically self-sufficient. Efficient and effective employment services are critical to achieving this goal. To that end, ORR currently provides both formula and discretionary grants to fund employment services which assist refugees in obtaining employment and decreasing their need for public assistance.

In recent years, ORR has held a series of conferences to foster sharing of information among employment services staff. The new welfare reform legislation further intensifies the need to share best practices and successful techniques in job development, job placement, and post placement services. To continue the ORR initiative for improved employment services, and to increase the capacity of employment service providers to help refugees attain employment, ORR proposes to award one cooperative agreement for technical assistance and training to refugee employment service providers. Funds provided under this award may be used nationwide for the following purposes:

1. To identify model and best practices for providing employment services to refugees.

2. To assist discretionary programs in using the existing Government Performance Results Act (GPRA), and, where appropriate, in developing and measuring, short and long term program performance outcomes for employment services to special populations.

3. In areas with large numbers of new arrivals and multiple employment services providers, to conduct on-site analysis of employment services and to provide the technical assistance needed to improve outcomes for: staff training, effective inter-agency cooperation, increasing employer and/or refugee involvement in the design or delivery of services, or management and other issues which may improve performance.

4. To facilitate multi-site, consultative and information-sharing training sessions where similar agencies and/or agencies serving similar groups of refugees or working in similar employment environments can share experiences, conduct self-assessment and group assessment, and complete a blueprint for self-and agency improvement. A training session might include an on-site peer group review of a project which requests technical assistance.

5. To provide training in basic employment services skills to newly hired or inexperienced staff, to agencies experiencing staff turnover, or to agencies which lack expertise in employment services or employment services for refugees.

Through the cooperative agreement, ORR intends to be involved in the program in the following areas: review and approval of the technical assistance plan, including the sites proposed; assistance in giving employment providers access to the grantee's services; review and approval of training curricula; review and approval of assessment tools used to evaluate technical assistance needs; and general review and approval of materials prepared for delivery of technical assistance.

Approximately $150,000 has been allocated for this project. One grant may be awarded for one national project.

State applicants who may wish to apply and issue a contract to provide the technical assistance should identify the sub-contractor organization and/or provide a description of the contractual award process. Applicants are advised that provision of technical assistance to a grantee may only be made on a requested or voluntary basis.

B. Allowable Activities

Applicants may propose all or a combination of the following activities:

• Identification and promotion of projects which constitute best or model practices.

• Selection justification of proposed sites for technical assistance activities;

• Analysis of employment services in two or more sites for the purpose of improving performance;

• Training for basic employment services skills, including new Federal and State supported job initiatives, to newly hired or inexperienced staff;

• Training and/or facilitation in developing strategies and techniques, such as:

—Service delivery to special groups, such as women, older refugees, or youth;
—Effective inter-agency coordination;
—Obtaining employer feedback in quality or design of services;
—Changing the employment service delivery mechanism (e.g., to a one-stop center operated by a consortium of providers);
—Assessing clients' transferable job skills;

• Training and/or facilitation through on-site peer reviews, through multi-site information sharing and problem solving sessions, and/or through individual consultation.

C. Program Narrative

—A description of the applicant's organizational structure, staff qualifications, especially experience in refugee employment services and/or job development.
—A narrative description of proposed technical assistance activities for a designated number of grantee agencies, with a timetable and schedule for site-visits or other proposed activities and related reports.
—A line-item budget and budget narrative (applicants who request indirect charges must attach a copy of their current negotiated indirect cost agreement. If the applicant does not have a negotiated indirect cost agreement with any agency of the federal government, all costs must appear in the budget as direct charges).

D. Review Criteria

Each project proposal will be rated individually by an independent review panel using the criteria described below:

1. Staff qualifications are clearly presented and are appropriate to achieving the project's goals. Staff qualifications include demonstrated expertise in assisting refugees or low income ethnic minorities in obtaining employment, previous experience with the provision of technical assistance in the field of employment service, experience in cross-cultural communication, and knowledge of Federal and State employment initiatives. Organizational expertise is described. 40 points

2. The narrative description and plan for providing technical assistance is clearly described; activities and time-frames are reasonable, feasible and will achieve ORR's goals.

The technical plan describes proposed activities, how they will be accomplished, how the applicant will assess the needs for technical assistance in given communities, and why it proposes those communities. 40 points

3. The budget is reasonable, clearly presented, sufficiently detailed, and cost effective. 20 points

Program Area Two: Technical Assistance to Elderly Refugee Services Grantees

A. Purpose and Availability of Funds

Older refugees may be especially vulnerable because of certain age-related issues: chronic health and emotional problems stemming from the conditions of refugee flight; family loss and separation; an inability to advocate for themselves because of cultural, language, or educational barriers; limited access to appropriate health and social service agencies; limited incomes due to work histories; and barriers to meeting the requirements for naturalization.

To address those issues, the Office of Refugee Resettlement is making available approximately $9.5 million in discretionary grant funds in a separate grant announcement to assist States with counties heavily impacted by older refugees. When those grantees are funded, ORR proposes to award a grant up to $150,000 to one non-profit service agency capable of providing technical assistance, troubleshooting, and developing and implementing on-site solutions to barriers which these potential grantees may experience in coordinating programs for elderly refugees. ORR is seeking a private, non-profit service agency which has experience in working with elderly refugees at the federal, State and local levels.

B. Allowable Activities

Applicants may propose all or some combination of the following or may propose innovative strategies to address older refugee needs:

• Providing technical assistance to ORR grant recipients under the announcement for services to elderly refugees for the purpose of insuring coordination between aging and refugee services and programs.

• Making on-site visits to evaluate the success of older refugees' receiving needed services in a timely manner.

• Where grantees are experiencing problems with carrying out their proposals, working closely with staff to resolve issues.

• Evaluating individual success by talking with consumers of services (elderly refugees); determining whether clients are indeed participating in the planning process.

• Determining which grantees need technical assistance with refugees in crisis situations, e.g., the short-term provision of emergency assistance, such as food, shelter and medical services and helping grantees to develop workable solutions.

• Identifying and documenting unmet needs of older refugees and helping grantees prepare and implement action plans to overcome these barriers.

C. Program Narrative

—A description of the applicant's organizational structure and staff qualifications, especially working with refugee and aging organizations;
—A narrative description of technical assistance activities, including: timelines and start-up times, the method for assessing the technical assistance needs of given communities, procedures to evaluate grantee successes, and action plans to assist grantees meet their stated objectives;
—A plan to assist grantees with the development of collaboration and linkages between aging and refugee organizations at the local level; and,
—A line-item budget and budget narrative, including a cost analysis of the applicant's management of each proposed activity and narrative justification to support each line (applicants who request indirect charges must attach a copy of the organization's current negotiated indirect cost agreement. If the applicant does not have a negotiated indirect cost agreement with any agency of the federal government, all costs must appear in the budget as direct charges).

D. Review Criteria

Each proposal will be rated and scored individually by an independent review panel using the criteria described below:

1. Organization's expertise and history of experience in working with aging and refugee organizations at the national, state and local levels. 30 points

2. Clarity and appropriateness of plan and proposed activities for providing

technical assistance, assessing the technical assistance needs of given communities, procedures to be used to help grantees evaluate their performance. 35 points

3. Quality of plan for development of grantee collaboration and linkages between aging and refugee organizations. 20 points

4. Appropriateness and reasonableness of the proposed budget. 15 points

Program Area Three: Technical Assistance regarding the Impact of Welfare and Immigration Reform on Refugees and Refugee Communities

A. Purpose and Availability of Funds

The primary goal of refugee resettlement is to assist refugees to become economically self-sufficient. While ORR currently provides Targeted Assistance and Social Services funds to States and nonprofit agencies for employment services to assist refugees in obtaining employment, many refugees need some form of cash or medical assistance during their resettlement experience.

The Personal Responsibility and Work Opportunity Reconciliation Act of 1996 (also known as ''Welfare Reform''), Public Law 104–193, eliminated the AFDC program, the JOBS program, and Emergency Assistance, and created block grants for States to provide time-limited cash assistance for needy families, with work requirements for most recipients. The Temporary Assistance for Needy Families (TANF) Block Grant funding may be used by States in any manner reasonably calculated to accomplish several purposes: To provide assistance to needy families so that children can be cared for in their own home; to reduce dependency by promoting job preparation, work and marriage; to prevent out-of-wedlock pregnancies; and to encourage the formation and maintenance of two-parent families. The Illegal Immigration Reform and Immigrant Responsibility Act (also known as ''Immigration Reform''), P.L. 104–208, further restricted access to certain programs by legal immigrants.

The new rules regarding non-citizens are complex and easily subject to misinterpretation. For refugees this may have unintended negative consequences. Refugees may be unfairly denied access to work because of fear of employer sanctions or denied benefits due to confusion over status.

ORR proposes to award one cooperative agreement for technical assistance and training for refugee service providers concerning the impact of welfare and immigration reform on refugees and refugee communities. Funds provided under this award may be used nationwide for the following purposes:

1. To provide technical assistance and coordinate information-sharing and analysis—State by State, as well as nation-wide—for refugee service providers with the goal of increasing, as needed, awareness and understanding of the impact of welfare and immigration reform on refugee families.

2. To assist refugee service programs through the development and distribution of materials providing information and education on the implementation of welfare and immigration reform.

3. To coordinate communication among local refugees and service providers as well as between local agencies and national organizations working on these issues i.e. through sharing translated materials or telephone conferences.

4. To facilitate multi-site consultative and information-sharing training sessions where similar agencies, and/or agencies serving similar groups of refugees or working in similar environments, can share experiences and information.

Through the cooperative agreement, ORR intends to be involved in the program in the following areas: review and approval of the technical assistance plan; assistance in giving ORR grantees access to the technical assistance provider's services; and general review of materials prepared for delivery of information and technical assistance.

Approximately $250,000 has been allocated for this project. One grant will be awarded for one national project.

State applicants who may wish to apply and issue a contract to provide the technical assistance should identify the sub-contractor organization and/or provide a description of the contractual award process. Applicants are advised that provision of technical assistance to a grantee may only be made on a requested or voluntary basis.

B. Allowable Activities

Applicants may propose all or some combination of the following:

- Providing technical assistance to ORR grant recipients and other refugee service providers to promote an understanding of the impact of welfare and immigration reform on refugee families and communities.
- Obtaining and assessing refugee feedback regarding the information on welfare and immigration reform.
- Training and facilitation in developing strategies and techniques, such as:

—Effective inter-agency coordination;
—Assessing the State by State and/or national impact of the new laws on refugees and refugee communities.

- Peer training through multi-site information sharing sessions, individual agency/community consultations, and on-site visits.

C. Program Narrative

—A description of the applicant's organizational structure, staff qualifications, especially demonstrated knowledge of relevant provisions in welfare and immigration reform, legalization and asylum, and experience in communicating federal and State policies and regulations to local, preferably refugee, communities and service-providers.
—A narrative description of technical assistance activities for a representative national or regional network of refugee communities and grantee agencies, with a timetable and schedule for site-visits or other proposed activities and related reports.
—A line-item budget and budget narrative (applicants who request indirect charges must attach a copy of the organization's current negotiated indirect cost agreement. If the applicant does not have a negotiated indirect cost agreement with any agency of the federal government, all costs must appear in the budget as direct charges).

D. Review Criteria

Each project proposal will be rated individually by an independent review panel using the criteria described below:

1. Organizational expertise is described.

Staff qualifications are clearly presented and are appropriate to achieving the project's goals. Staff qualifications include demonstrated expertise in assisting refugees or low income ethnic minorities in accessing information on federal programs and regulations, previous experience with the provision of related technical assistance to refugee service-providers, experience in cross-cultural communication, and knowledge of Federal and State TANF initiatives and the broader welfare and immigration reform implications for refugees and refugee communities. 40 points

2. The narrative description and plan for providing technical assistance is clearly described; activities and time-frames are reasonable, feasible and will

achieve ORR's goals. The technical plan describes proposed activities, how they will be accomplished, how the applicant will meet the needs for technical assistance to given agencies and communities, and why these agencies and communities are proposed. 40 points

3. The budget is reasonable, clearly presented, sufficiently detailed, and cost effective. 20 points

General Procedure for Competitive Review of Applications

All applications which meet the stipulated deadline and other requirements will be reviewed competitively and scored by an independent review panel of experts in accordance with ACF grants policy and the criteria stated below. The results of the independent review panel scores and explanatory comments will assist the Director of ORR in considering competing applications. Reviewers' scores will weigh heavily in funding decisions but will not be the only factors considered. Applications generally will be considered in order of the average scores assigned by the reviewers. Highly ranked applications are not guaranteed funding since other factors are taken into consideration, including: comments of reviewers and of ACF/ORR officials; previous program performance of applicants; compliance with grant terms under previous DHHS grants; audit reports; and investigative reports. Final funding decisions will be made by the Director of ORR.

A. Application Preparation and Submission

Availability of Forms: Attachments contain all of the standard forms necessary for the application for awards under this announcement. Further, copies of the **Federal Register** containing this announcement are available at most local libraries and Congressional District Offices for reproduction. If copies are not available at these sources, they may be obtained by writing or telephoning the following office: Office of Refugee Resettlement, 370 L'Enfant Promenade S.W., Washington, D.C. 20447, Telephone: (202) 401–9251.

B. Forms, Certifications, Assurances, and Disclosure

1. Applicants for financial assistance under this announcement must file the Standard Form (SF) 424, Application for Federal Assistance; SF–424A, Budget Information—Non-Construction Programs; SF–424B, Assurances—Non-Construction Programs. The instructions and forms required for submission of applications are included. The forms may be reproduced for use in submitting applications. An application with an original signature and two copies is required.

2. Applicants must provide the following certifications. Copies of the forms and assurances are located at the end of this announcement.

a. Certification regarding lobbying if your anticipated award exceeds $100,000.

b. Certification regarding environmental tobacco smoke. By signing and submitting the applications, applicant provides certification that they will comply with the requirements of the Pro-Children Act of 1994 (Pub.L. 103–227, Part C—Environmental Tobacco Smoke) and need not mail back the certification with the application.

c. Certification regarding debarment, suspension, and other Ineligibility. By signing and submitting the applications, applicant provides certification that they are not presently debarred, suspended or otherwise ineligible for this award and therefore need not mail back the certification with the application.

d. Drug-Free Workplace Act of 1988.

C. Deadline

1. Mailed applications shall be considered as meeting an announced deadline if they are received on or before the deadline date by ORR at: U.S. Department of Health and Human Services, Administration for Children and Families, Office of Refugee Resettlement, Division of Community Resettlement, 370 L'Enfant Promenade, S.W., Sixth Floor, Washington, D.C. 20447, *Attention: Omnibus Competition.*

Applications hand-carried by applicants, applicant couriers, or by overnight/express mail couriers shall be considered as meeting an announced deadline if they are received on or before the deadline date, between the hours of 8:00 a.m. and 4:30 p.m., at the U.S. Department of Health and Human Services, Administration for Children and Families, Office of Refugee Resettlement, Aerospace Center, 901 D Street, S.W., Washington, D.C. 20024, between Monday and Friday (excluding Federal holidays). (Applicants are cautioned that express/overnight mail services do not always deliver as agreed.)

ACF cannot accommodate transmission of applications by fax or through other electronic media. Therefore, applications transmitted to ACF electronically will not be accepted regardless of date or time of submission and time of receipt.

2. *Late applications:* Applications which do not meet the criteria above are considered late applications. ACF shall notify each late applicant that its application will not be considered in the current competition.

3. *Extension of deadlines:* ACF may extend the deadline for all applicants because of acts of God such as floods, hurricanes, etc., widespread disruption of the mails, or when it is anticipated that many of the applications will come from rural or remote areas. However, if the granting agency does not extend the deadline for all applicants, it may not waive or extend the deadline for any applicants.

4. Once an application has been submitted, it is considered as final and no additional materials will be accepted by ACF.

D. Nonprofit Status

Applicants other than public agencies must provide evidence of their nonprofit status with their applications. Any of the following is acceptable evidence: (1) A copy of the applicant organization's listing in the Internal Revenue Service's most recent list of tax-exempt organizations described in section 501(c)(3) of the IRS Code; or (2) A copy of the currently valid IRS tax exemption certificate.

E. Intergovernmental Review

This program is covered under Executive Order 12372, ''Intergovernmental Review of Federal Programs,'' and 45 CFR Part 100, ''Intergovernmental Review of Department of Health and Human Services Programs and Activities.''

As of January, 1997, the following jurisdictions have elected not to participate in the Executive Order process. Applicants from these jurisdictions need take no action in regard to E.O. 12372:

Alabama, Alaska, Colorado, Connecticut, Hawaii, Idaho, Kansas, Louisiana, Massachusetts, Minnesota, Montana, Nebraska, New Jersey, Oklahoma, Oregon, Pennsylvania, South Dakota, Tennessee, Vermont, Virginia, Washington, American Samoa, and Palau.

All remaining jurisdictions participate in the E.O. process and have established Single Points of Contact (SPOCs). A list of the Single Points of Contact for each State and Territory is included as Appendix A of this announcement.

Applicants from participating jurisdictions should contact their SPOCs as soon as possible to alert them to the prospective applications and receive instructions. Applicants must submit any required material to the SPOCs as

soon as possible so that ORR can obtain and review SPOC comments as part of the award process. The applicant must submit all required materials, if any, to the SPOC and indicate the date of this submittal (or the date of contact if no submittal is required) on the Standard Form 424, item 16a.

Under 45 CFR 100.8 (a)(2), a SPOC has 60 days from the application deadline to comment on proposed new or competing continuation awards. SPOCs are encouraged to eliminate the submission of routine endorsements as official recommendations.

Additionally, SPOCs are requested to clearly differentiate between mere advisory comments and those official State process recommendations which may trigger the ''accommodate or explain'' rule. When comments are submitted directly to ACF, they should be addressed to: Department of Health and Human Services, Administration for Children and Families, Office of Refugee Resettlement, Division of Community Resettlement, 6th Floor 370 L'Enfant Promenade, SW., Washington, DC 20447.

F. Paperwork Reduction Act of 1995

Under the Paperwork Reduction Act of 1995, Pub. Law 104–13, the Department is required to submit to the Office of Management and Budget (OMB) for review and approval any reporting and record keeping requirements in regulations, including program announcements. All information required by this is covered under OMB Clearance No. 0970–0139.

G. Applicable Regulations

Applicable HHS regulations can be found in 45 CFR Part 74 or 92.

H. Reporting Requirements

Grantees are required to file Financial Status (SF–269) semi-annually and Program Progress Reports on a quarterly basis. Funds issued under these awards must be accounted for and reported upon separately from all other grant activities.

Although ORR does not expect the proposed components/projects to include evaluation activities, it does expect grantees to maintain adequate records to track and report on project outcomes and expenditures by budget line item.

The official receipt point for all reports and correspondence is the ORR Division of Community Resettlement. An original and one copy of each report shall be submitted within 30 days of the end of each reporting period directly to the Project Officer named in the award letter. The mailing address is: 370 L'Enfant Promenade SW., Sixth Floor, Washington, DC 20447.

A final Financial and Program Report shall be due 90 days after the budget expiration date or termination of grant support.

The Catalog of Federal Domestic Assistance (CFDA) number assigned to this announcement is 93.576.

Dated: June 9, 1997.

Lavinia Limon,

Director, Office of Refugee Resettlement.

Appendix A—OMB State Single Point of Contact Listing

Arizona

Joni Saad, Arizona State Clearinghouse, 3800 N. Central Avenue, Fourteenth Floor, Phoenix, Arizona 85012, Telephone (602) 280–1315, FAX: (602) 280–1305

Arkansas

Mr. Tracy L. Copeland, Manager, State Clearinghouse, Office of Intergovernmental Services, Department of Finance and Administration, 1515 W. 7th St., Room 412, Little Rock, Arkansas 72203, Telephone (501) 682–1074, FAX: (501) 682–5206

California

Grants Coordinator, Office of Planning and Research, 1400 Tenth Street, Room 121, Sacramento, California 95814, Telephone (916) 323–7480, FAX (916) 323–3018

Delaware

Francine Booth, State Single Point of Contact Executive Department, Thomas Collins Building, P.O. Box 1401, Dover, Delaware 19903, Telephone (302) 739–3326, FAX (302) 739–5661

District of Columbia

Charles Nichols, State Single Point of Contact, Office of Grants Mgmt. and Dev., 717 14th Street, N.W.—Suite 500, Washington, D.C. 20005, Telephone: (202) 727–6554, FAX: (202) 727–1617

Florida

Florida State Clearinghouse, Department of Community Affairs, 2740 Centerview Drive, Tallahassee, Florida 32399–2100, Telephone: (904) 922–5438, FAX: (904) 487–2899

Georgia

Tom L. Reid, III, Administrator, Georgia State Clearinghouse, 254 Washington Street, S.W.—Room 401J, Atlanta, Georgia 30334, Telephone: (404) 656–3855 or (404) 656–3829, FAX: (404) 656–7938

Illinois

Virginia Bova, State Single Point of Contact, Department of Commerce and Community Affairs, James R. Thompson Center, 100 West Randolph, Suite 3–400, Chicago, Illinois 60601, Telephone: (312) 814–6028, FAX: (312) 814–1800

Indiana

Frances Williams, State Budget Agency, 212 State House, Indianapolis, Indiana 46204–2796, Telephone: (317) 232–5619, FAX: (317) 233–3323

Iowa

Steven R. McCann, Division for Community Assistance, Iowa Department of Economic Development, 200 East Grand Avenue, Des Moines, Iowa 50309, Telephone: (515) 242–4719, FAX: (515) 242–4859

Kentucky

Ronald W. Cook, Office of the Governor, Department of Local Government, 1024 Capitol Center Drive, Frankfort, Kentucky 40601–8204, Telephone: (502) 573–2382, FAX: (502) 573–2512

Maine

Joyce Benson, State Planning Office, State House Station #38, Augusta, Maine 04333, Telephone: (207) 287–3261, FAX: (207) 287–6489

Maryland

William G. Carroll, Manager, State Clearinghouse for Intergovernmental Assistance, Maryland Office of Planning, 301 W. Preston Street—Room 1104, Baltimore, Maryland 21201–2365, Staff Contact: Linda Janey, Telephone: (410) 225–4490, FAX: (410) 225–4480

Michigan

Richard Pfaff, Southeast Michigan Council of Governments, 1900 Edison Plaza, 660 Plaza Drive, Detroit, Michigan 48226, Telephone: (313) 961–4266

Mississippi

Cathy Malette, Clearinghouse Officer, Department of Finance and Administration, 455 North Lamar Street, Jackson, Mississippi 39202–3087, Telephone: (601) 359–6762, FAX: (601) 359–6764

Missouri

Lois Pohl, Federal Assistance Clearinghouse, Office of Administration, P.O. Box 809, Room 760, Truman Building, Jefferson City, Missouri 65102, Telephone: (314) 751–4834, FAX: (314) 751–7819

Nevada

Department of Administration, State Clearinghouse, Capitol Complex, Carson City, Nevada 89710, Telephone: (702) 687–4065, FAX: (702) 687–3983

New Hampshire

Jeffrey H. Taylor, Director, New Hampshire Office of State Planning, Attn: Intergovernmental Review Process, Mike Blake, 2½ Beacon Street, Concord, New Hampshire 03301, Telephone: (603) 271–2155, FAX: (603) 271–1728

New Mexico

Robert Peters, State Budget Division, Room 190 Bataan Memorial Building, Santa Fe, New Mexico 87503, Telephone: (505) 827–3640

New York

New York State Clearinghouse, Division of the Budget, State Capitol, Albany, New York 12224, Telephone: (518) 474–1605, FAX: (518) 486–5617

North Carolina

Chrys Baggett, Director, N.C. State Clearinghouse, Office of the Secretary of Admin., 116 West Jones Street, Raleigh,

North Carolina 27603–8003, Telephone: (919) 733–7232, FAX: (919) 733–9571

North Dakota

North Dakota Single Point of Contact, Office of Intergovernmental Assistance, 600 East Boulevard Avenue, Bismarck, North Dakota 58505–0170, Telephone: (701) 224–2094, FAX: (701) 224–2308

Ohio

Larry Weaver, State Single Point of Contact, State Clearinghouse, Office of Budget and Management, 30 East Broad Street, 34th Floor, Columbus, Ohio 43266–0411

Please direct correspondence and questions about intergovernmental review to:

Linda Wise, Telephone: (614) 466–0698, FAX: (614) 466–5400

Rhode Island

Kevin Nelson, Review Coordinator, Department of Administration/Division of Planning, One Capitol Hill, 4th Floor, Providence, Rhode Island 02908–5870, Telephone: (401) 277–2656, FAX: (401) 277–2083

Please direct correspondence and questions to:

Review Coordinator, Office of Strategic Planning

South Carolina

Rodney Grizzle, State Single Point of Contact, Grant Services, Office of the Governor, 1205 Pendleton Street—Room 331, Columbia, South Carolina 29201, Telephone: (803) 734–0494, FAX: (803) 734–0356

Texas

Tom Adams, Governor's Office, Director, Intergovernmental Coordination, P.O. Box 12428, Austin, Texas 78711, Telephone: (512) 463–1771, FAX: (512) 463–1888

Utah

Carolyn Wright, Utah State Clearinghouse, Office of Planning and Budget, Room 116 State Capitol, Salt Lake City, Utah 84114, Telephone: (801) 538–1535, FAX: (801) 538–1547

West Virginia

Fred Cutlip, Director, Community Development Division, W. Virginia Development Office, Building #6, Room 553, Charleston, West Virginia 25305, Telephone: (304) 558–4010, FAX: (304) 558–3248

Wisconsin

Jeff Smith, Section Chief, State/Federal Relations, Wisconsin Department of Administration, 101 East Wilson Street—6th Floor, P.O. Box 7868, Madison, Wisconsin 53707, Telephone: (608) 266–0267, FAX: (608) 267–6931

Wyoming

Matthew Jones, State Single Point of Contact, Office of the Governor, 200 West 24th Street, State Capitol, Room 124, Cheyenne, Wyoming 82002, Telephone: (307) 777–7446 FAX: (307) 632–3909

Territories

Guam

Mr. Giovanni T. Sgambelluri, Director, Bureau of Budget and Management Research, Office of the Governor, P.O. Box 2950, Agana, Guam 96910, Telephone: 011–671–472–2285, FAX: 011–671–472–2825

Puerto Rico

Norma Burgos/Jose E. Caro, Chairwoman/Director, Puerto Rico Planning Board, Federal Proposals Review Office, Minillas Government Center, P.O. Box 41119, San Juan, Puerto Rico 00940–1119, Telephone: (809) 727–4444, (809) 723–6190, FAX: (809) 724–3270; (809) 724–3103

North Mariana Islands

Mr. Alvaro A. Santos, Executive Officer, State Single Point of Contact, Ofice of Management and Budget, Office of the Governor, Saipan, MP, Northern Mariana Islands 96950, Telephone (670) 664–2256, FAX: (670) 664–2272

Contact Person:

Ms. Jacoba T. Seman, Federal Programs Coordinator, Telephone (670) 644–2289, FAX: (670) 644–2272

Virgin Islands

Nelson Bowry, Director, Office of Management and Budget, #41 Norregade Emancipation Garden Station, Second Floor, Saint Thomas, Virgin Islands 00802

Please direct all questions and correspondence about intergovernmental review to:

Linda Clarke, Telephone: (809) 774–0750, FAX: (809) 776–0069

In accordance with Executive Order #12372, ''Intergovernmental Review of Federal Programs,'' this listing represents the designated State Single Points of Contact. The jurisdications not listed no longer participate in the process BUT GRANT APPLICANTS ARE STILL ELIGIBLE TO APPLY FOR THE GRANT EVEN IF YOUR STATE, TERRITOTY, COMMONWEALTH, ETC DOES NOT HAVE A ''STATE SINGLE POINT OF CONTACT.'' STATES WITHOUT ''STATE SINGLE POINTS OF CONTACT'' INCLUDE: Alabama, Alaska, American Samoa, Colorado, Connecticut, Kansas, Hawaii, Idaho, Louisiana, Massachusetts, Palau, Minnesota, Montana, Nebraska, New Jersey, Oklahoma, Oregon, Pennsylvania, South Dakota, Tennessee, Vermont, Virginia, and Washington. This list is based on the most current information provided by the States. Information on any changes or apparent errors should be provided to the Office of Management and Budget and the State in question. Changes to the list will only be made upon formal question. Changes to the list will only be made upon formal notification by the State. Also, this listing is published biannually in the Catalogue of Federal Domestic Assistance.

BILLING CODE 4184–01–P

APPLICATION FOR FEDERAL ASSISTANCE

OMB Approval No. 0348-0043

	2. DATE SUBMITTED	Applicant Identifier
1. TYPE OF SUBMISSION: Application ☐ Construction ☐ Non-Construction / Preapplication ☐ Construction ☐ Non-Construction	3. DATE RECEIVED BY STATE	State Application Identifier
	4. DATE RECEIVED BY FEDERAL AGENCY	Federal Identifier

5. APPLICANT INFORMATION

Legal Name:	Organizational Unit:
Address *(give city, county, state, and zip code)*:	Name and telephone number of person to be contacted on matters involving this application *(give area code)*

6. EMPLOYER IDENTIFICATION NUMBER (EIN): ☐☐ - ☐☐☐☐☐☐☐

7. TYPE OF APPLICANT: *(enter appropriate letter in box)* ☐

A. State
B. County
C. Municipal
D. Township
E. Interstate
F. Intermunicipal
G. Special District
H. Independent School Dist.
I. State Controlled Institution of Higher Learning
J. Private University
K. Indian Tribe
L. Individual
M. Profit Organization
N. Other (Specify)_____

8. TYPE OF APPLICATION:

☐ New ☐ Continuation ☐ Revision

If Revision, enter appropriate letter(s) in box(es) ☐ ☐

A. Increase Award B. Decrease Award C. Increase Duration
D. Decrease Duration Other *(specify)*:

_____

9. NAME OF FEDERAL AGENCY:

10. CATALOG OF FEDERAL DOMESTIC ASSISTANCE NUMBER: ☐☐ - ☐☐☐

TITLE:

11. DESCRIPTIVE TITLE OF APPLICANT'S PROJECT:

12. AREAS AFFECTED BY PROJECT *(Cities, Counties, States, etc.)*:

13. PROPOSED PROJECT		14. CONGRESSIONAL DISTRICTS OF:	
Start Date	Ending Date	a. Applicant	b. Project

15. ESTIMATED FUNDING:

a. Federal	$ .00
b. Applicant	$ .00
c. State	$ .00
d. Local	$ .00
e. Other	$ .00
f. Program Income	$ .00
g. TOTAL	$ .00

16. IS APPLICATION SUBJECT TO REVIEW BY STATE EXECUTIVE ORDER 12372 PROCESS?

a. YES. THIS PREAPPLICATION/APPLICATION WAS MADE AVAILABLE TO THE STATE EXECUTIVE ORDER 12372 PROCESS FOR REVIEW ON:

DATE _____

b. NO. ☐ PROGRAM IS NOT COVERED BY E.O. 12372
☐ OR PROGRAM HAS NOT BEEN SELECTED BY STATE FOR REVIEW

17. IS THE APPLICANT DELINQUENT ON ANY FEDERAL DEBT?

☐ Yes If "Yes," attach an explanation. ☐ No

18. TO THE BEST OF MY KNOWLEDGE AND BELIEF, ALL DATA IN THIS APPLICATION/PREAPPLICATION ARE TRUE AND CORRECT. THE DOCUMENT HAS BEEN DULY AUTHORIZED BY THE GOVERNING BODY OF THE APPLICANT AND THE APPLICANT WILL COMPLY WITH THE ATTACHED ASSURANCES IF THE ASSISTANCE IS AWARDED.

a. Typed Name of Authorized Representative	b. Title	c. Telephone Number
d. Signature of Authorized Representative		e. Date Signed

Previous Edition Usable
Authorized for Local Reproduction

Standard Form 424 (REV 4-92)
Prescribed by OMB Circular A-102

BILLING CODE 4184–01–C

Instructions for the SF 424

Public reporting burden for this collection of information is estimated to average 45 minutes per response, including time for reviewing instructions, searching existing data sources, gathering and maintaining the data needed, and completing and reviewing the collection of information. Send comments regarding the burden estimate or any other aspect of this collection of information, including suggestions for reducing this burden, to the Office of Management and Budget. Paperwork Reduction Project (0348–0043), Washington, DC 20503.

Please do not return your completed form to the Office of Management and Budget, send it to the address provided by the sponsoring agency.

This is a standard form used by applicants as a required facesheet for preapplications and applications submitted for Federal assistance. It will be used by Federal agencies to obtain applicant certification that States which have established a review and comment procedure in response to Executive Order 12372 and have selected the program to be included in their process, have been given an opportunity to review the applicant's submission.

Item and Entry

1. Self-explanatory.

2. Date application submitted to Federal agency (or State, if applicable) & applicant's control number (if applicable.).

3. State use only (if applicable).

4. If this application is to continue or revise an existing award, enter present Federal identifier number. If for a new project, leave blank.

5. Legal name of applicant, name of primary organizational unit which will undertake the assistance activity, complete address of the applicant, and name and telephone number of the person to contact on matters related to this application.

6. Enter Employer Identification Number (EIN) as assigned by the Internal Revenue Service.

7. Enter the appropriate letter in the space provided.

8. Check appropriate box and enter appropriate letter(s) in the space(s) provided:

—''New'' means a new assistance award.

—''Continuation'' means an extension for an additional funding/budget period for a project with a projected completion date.

—''Revision'' means any change in the Federal Government's financial obligation or contingent liability from an existing obligation.

9. Name of Federal agency from which assistance is being requested with this application.

10. Use the Catalog of Federal Domestic Assistance number and title of the program under which assistance is requested.

11. Enter a brief descriptive title of the project. If more than one program is involved, you should append an explanation on a separate sheet. If appropriate (e.g., construction or real property projects), attach a map showing project location. For preapplications, use a separate sheet to provide a summary description of this project.

12. List only the largest political entities affected (e.g., State, counties, cities.)

13. Self-explanatory.

14. List the applicant's Congressional district and any district(s) affected by the program or project.

15. Amount requested or to be contributed during the first funding/budget period by each contributor. Value of in-kind contributions should be included on appropriate lines as applicable. If the action will result in a dollar change to an existing award, indicate *only* the amount of the change. For decreases, enclose the amounts in parentheses. If both basic and supplemental amounts are included, show breakdown on an attached sheet. For multiple program funding, use totals and show breakdown using same categories as items 15.

16. Applicants should contact the State Single Point of Contact (SPOC) for Federal Executive Order 12372 to determine whether the application is subject to the State intergovernmental review process.

17. This question applies to the applicant organization, not the person who signs as the authorized representative. Categories of debt include delinquent audit allowances, loans and taxes.

18. To be signed by the authorized representative of the applicant. A copy of the governing body's authorization for you to sign this application as official representative must be on file in the applicant's office. (Certain Federal agencies may require that this authorization be submitted as part of the application

BILLING CODE 4184–01–P

OMB Approval No. 0348-0044

BUDGET INFORMATION — Non-Construction Programs

SECTION A - BUDGET SUMMARY

Grant Program Function or Activity (a)	Catalog of Federal Domestic Assistance Number (b)	Estimated Unobligated Funds		New or Revised Budget		
		Federal (c)	Non-Federal (d)	Federal (e)	Non-Federal (f)	Total (g)
1.		$	$	$	$	$
2.						
3.						
4.						
5. Totals		$	$	$	$	$

SECTION B - BUDGET CATEGORIES

6. Object Class Categories	GRANT PROGRAM, FUNCTION OR ACTIVITY				Total (5)
	(1)	(2)	(3)	(4)	
a. Personnel	$	$	$	$	$
b. Fringe Benefits					
c. Travel					
d. Equipment					
e. Supplies					
f. Contractual					
g. Construction					
h. Other					
i. Total Direct Charges (sum of 6a - 6 6h)					
j. Indirect Charges					
k. TOTALS (sum of 6i and 6j)	$	$	$	$	$
7. Program Income	$	$	$	$	$

Previous Edition Usable

Authorized for Local Reproduction

Standard Form 424A (Rev. 4-92)
Prescribed by OMB Circular A-102

SECTION C — NON-FEDERAL RESOURCES				
(a) Grant Program	(b) Applicant	(c) State	(d) Other Sources	(e) TOTALS
8.	$	$	$	$
9.				
10.				
11.				
12. TOTAL (sum of lines 8 and 11)	$	$	$	$

SECTION D - FORECASTED CASH NEEDS					
	Total for 1st Year	1st Quarter	2nd Quarter	3rd Quarter	4th Quarter
13. Federal	$	$	$	$	$
14. Non-Federal					
15. TOTAL (sum of lines 13 and 14)	$	$	$	$	$

SECTION E — BUDGET ESTIMATES OF FEDERAL FUNDS NEEDED FOR BALANCE OF THE PROJECT				
(a) Grant Program	FUTURE FUNDING PERIODS (Years)			
	(b) First	(c) Second	(d) Third	(e) Fourth
16.	$	$	$	$
17.				
18.				
19.				
20. TOTAL (sum of lines 16 - 19)	$	$	$	$

SECTION F — OTHER BUDGET INFORMATION	
21. Direct Charges:	22. Indirect Charges:
23. Remarks:	

Authorized for Local Reproduction

Standard Form 424A (Rev. 4-92) Page 2

BILLING CODE 4184–01–C

Instructions for the SF 424A

Public reporting burden for this collection of information is estimated to average 180 minutes per response, including time for reviewing instructions, searching existing data sources, gathering and maintaining the data needed, and completing and reviewing the collection of information. Send comments regarding the burden estimate or any other aspect of this collection of information, including suggestions for reducing this burden, to the Office of Management and Budget, Paperwork Reduction Project (0348–0043), Washington, DC 20503.

Please do not return your completed form to the Office of Management and Budget, send it to the address provided by the sponsoring agency.

General Instructions

This form is designed so that application can be made for funds from one or more grant programs. In preparing the budget, adhere to any existing Federal grantor agency guidelines which prescribe how and whether budgeted amounts should be separately shown for different functions or activities within the program. For some programs, grantor agencies may require budgets to be separately shown by function or activity. For other programs, grantor agencies may require a breakdown by function or activity. Sections A, B, C, and D should include budget estimates for the whole project except when applying for assistance which requires Federal authorization in annual or other funding period increments. In the latter case, Sections A, B, C, and D should provide the budget for the first budget period (usually a year) and Section E should present the need for Federal assistance in the subsequent budget periods. All applications should contain a breakdown by the object class categories shown in Lines a–k of Section B.

Section A. Budget Summary Lines 1–4, Columns (a) and (b)

For applications pertaining to a single Federal grant program (Federal Domestic Assistance Catalog number) and not requiring a functional or activity breakdown, enter on Line 1 under Column (a) the catalog program title and the catalog number in Column (b).

For applications pertaining to a single program requiring budget amounts by multiple function or activities, enter the name of each activity or function on each line in Column (a), and enter the catalog number in Column (b). For applications pertaining to multiple programs where none of the programs require a breakdown by function or activity, enter the catalog program title on each line in Column (a) and the respective catalog number of each line in Column (b).

For applications pertaining to multiple programs where one or more programs require a breakdown by function or activity, prepare a separate sheet for each program requiring the breakdown. Additional sheets should be used when one form does not provide adequate space for all breakdown of data required. However, when more than one sheet is used, the first page should provide the summary totals by programs.

Lines 1–4, Columns (c) Through (g)

For new applications, leave Columns (c) and (d) blank. For each line entry in Columns (a) and (b), enter in Columns (e), (f), and (g) the appropriate amounts of funds needed to support the project for the first funding period (usually a year).

For continuing grant program applications, submit these forms before the end of each funding period as required by the grantor agency. Enter in Columns (c) and (d) the estimated amounts of funds which will remain unobligated at the end of the grant funding period only if the Federal grantor agency instructions provide for this. Otherwise, leave these columns blank. Enter in Columns (e) and (f) the amounts of funds needed for the upcoming period. The amount(s) in Column (g) should be the sum of amounts in Columns (e) and (f).

For supplemental grants and changes to existing grants, do not use Columns (c) and (d). Enter in Column (e) the amount of the increase or decrease of Federal funds and enter in Column (f) the amount of the increase or decrease of non-Federal funds. In Column (g) enter the new total budgeted amount (Federal and non-Federal) which includes the total previous authorized budgeted amounts plus or minus, as appropriate, the amounts shown in Columns (e) and (f). The amount(s) in Column (g) should not equal the sum of amounts in Columns (e) and (f).

Line 5—Show the total for all columns used.

Section B. Budget Categories

In the column headings (1) through (4), enter the titles of the same programs, functions, and activities shown on Lines 1–4, Column (a), Section A. When additional sheets are prepared for Section A, provide similar column headings on each sheet. For each program, function or activity, fill in the total requirements for funds (both Federal and non-Federal) by object class categories.

Lines 6a–i—Show the totals of Lines 6a to 6h in each column.

Line 6j—Show the amount of indirect cost.

Line 6k—Enter the total of amounts on Lines 6i and 6j. For all applications for new grants and continuation grants the total amount in column (5), Line 6k, should be the same as the total amount shown in Section A, Column (g), Line 5. For supplemental grants and changes to grants, the total amount of the increase or decrease as shown in Columns (1)–(4), Line 6k, should be the same as the sum of the amounts in Section A, Columns (e) and (f) on Line 5.

Line 7—Enter the estimated amount of income, if any, expected to be generated from this project. Do not add or subtract this amount from the total project amount. Show under the program

Section C. Non-Federal Resources

Lines 8–11 Enter amounts of non-Federal resources that will be used on the grant. If in-kind contributions are included, provide a brief explanation of a separation sheet.

Column (a)—Enter the program titles identical to Column (a), Section A. A breakdown by function or activity is not necessary.

Column (b)—Enter the contribution to be made by the applicant.

Column (c)—Enter the amount of the State's cash and in-kind contribution if the applicant is not a State or State agency. Applicants which are a State or State agencies should leave this column blank.

Column (d)—Enter the amount of cash and in-kind contributions to be made from all other sources.

Column (e)—Enter totals in Columns (b), (c), and (d).

Line 12—Enter the total for each of Columns (b)–(e). The amount in Column (e) should be equal to the amount of Line 5, Column (f), Section A.

Section D. Forecasted Cash Needs

Line 13—Enter the amount of cash needed by quarter from the grantor agency during the first year.

Line 14—Enter the amount of cash from all other sources needed by quarter during the first year.

Line 15—Enter the totals of amounts on Lines 13 and 14.

Section E. Budget Estimates of Federal Funds Needed for Balance of the Project

Lines 16–19—Enter in Column (a) the same grant program titles shown in Column (a), Section A. A breakdown by function or activity is not necessary. For new applications and continuation grant applications, enter in the proper columns amounts of Federal funds which will be needed to complete the program or project over the succeeding funding periods (usually in years). This section need not be completed for revisions (amendments, changes, or supplements) to funds for the current year of existing grants.

If more than four lines are needed to list the program titles, submit additional schedules as necessary.

Line 20—Enter the total for each of the Columns (b)–(e). When additional schedules are prepared for this Section, annotate accordingly and show the overall totals on this line.

Section F. Other Budget Information

Line 21—Use this space to explain amounts for individual direct object-class cost categories that may appear to be out of the ordinary or to explain the details as required by the Federal grantor agency.

Line 22—Enter the type of indirect rate (provisional, predetermined, final or fixed) that will be in effect during the funding period, the estimated amount of the base to which the rate is applied, and the total indirect expense.

Line 23—Provide any other explanations or comments deemed necessary.

Assurances—Non-Construction Programs

Public reporting burden for this collection of information is estimated to average 15 minutes per response, including time for reviewing instructions, searching existing data sources, gathering and maintaining the data needed, and completing and reviewing the collection of information. Send comments regarding the burden estimate or any other aspect of this collection of information, including suggestions for

reducing this burden, to the Office of Management and Budget, Paperwork Reduction Project (0348–0043), Washington, DC 20503.

Please do not return your completed form to the Office of Management and Budget, send it to the address provided by the sponsoring agency.

Note: Certain of these assurances may not applicable to your project or program. If you have questions, please contact the awarding agency. Further, certain Federal awarding agencies may require applicants to certify to additional assurances. If such is the case, you will be notified.

As the duly authorized representative of the applicant I certify that the applicant:

1. Has the legal authority to apply for Federal assistance and the institutional, managerial and financial capability (including funds sufficient to pay the non-Federal share of project costs) to ensure proper planning, management and completion of the project described in this application.

2. Will give the awarding agency, the Comptroller General of United States, and if appropriate, the State, through any authorized representative, access to and the right to examine all records, books, papers, or documents related to the award; and will establish a proper accounting system in accordance with generally accepted accounting standards or agency directives.

3. Will establish safeguards to prohibit employees from using their positions for a purpose that constitutes or presents the appearance of personal or organizational conflict of interest, or personal gain.

Will initiate and complete the work within the applicable time frame after receipt of approval of the awarding agency.

5. Will comply with the Intergovernmental Personnel Act of 1970 (42 U.S.C. §§ 4728–4763) relating to prescribed standards for merit systems for programs funded under one of the nineteen statutes or regulations specified in Appendix A of OPM's Standards for a Merit System of Personnel Administration (5 CFR 900, Subpart F).

6. Will comply with all Federal statutes relating to nondiscrimination. These include but are not limited to: (a) Title VI of the Civil Rights Act of 1964 (P.L. 88–352) which prohibits discrimination on the basis of race, color or national origin; (b) Title IX of the Education Amendments of 1972, as amended (20 U.S.C. §§ 1681–1683, and 1685–1686), which prohibits discrimination on the basis of sex; (c) Section 504 of the Rehabilitation Act of 1973, as amended (29 U.S.C. § 794), which prohibits discrimination on the basis of handicaps; (d) the Age Discrimination Act of 1975, as amended (42 U.S.C. § 6101–6107), which prohibits discrimination on the basis of age; (e) the Drug Abuse Office and Treatment Act of 1972 (P.L. 92–255), as amended, relating to nondiscrimination on the basis of drug abuse; (f) the Comprehensive Alcohol Abuse and Alcoholism Prevention, Treatment and Rehabilitation Act of 1970 (P.L. 91–616), as amended, relating to nondiscrimination on the basis of alcohol abuse or alcoholism; (g) §§ 523 and 527 of the Public Health Service Act of 1912 (42 U.S.C. 290 dd–3 and 290 ee–3), as amended, relating to confidentiality of alcohol and drug abuse patient records; (h) Title VIII of the Civil Rights Act of 1968 (42 U.S.C. § 3601 et seq.), as amended, relating to non-discrimination in the sale, rental or financing of housing; (i) any other nondiscrimination provisions in the specific statute(s) under which application for Federal assistance is being made; and (j) the requirements of any other nondiscrimination statute(s) which may apply to the application.

7. Will comply, or has already complied, with the requirements of Titles II and III of the Uniform Relocation Assistance and Real Property Acquisition Policies Act of 1970 (P.L. 91–646) which provide for fair and equitable treatment of persons displaced or whose property is acquired as a result of Federal or federally assisted programs. These requirements apply to all interests in real property acquired for project purposes regardless of Federal participation in purchases.

8. Will comply, as applicable, with the provisions of the Hatch Act (5 U.S.C. §§ 1501–1508 and 7324–7328) which limit the political activities of employees whose principal employment activities are funded in whole or in part with Federal funds.

9. Will comply, as applicable, with the provisions of the Davis-Bacon Act (40 U.S.C. §§ 276a to 276a–7), the Copeland Act (40 U.S.C. §§ 276c and 18 U.S.C. §§ 874), and the Contract Work Hours and Safety Standards Act (40 U.S.C. §§ 327–333), regarding labor standards for federally assisted construction subagreements.

10. Will comply, if applicable, with flood insurance purchase requirements of Section 102(a) of the Flood Disaster Protection Act of 1973 (P.L. 93–234) which requires recipients in a special flood hazard area to participate in the program and to purchase flood insurance if the total cost of insurable construction and acquisition is $10,000 or more.

11. Will comply with environmental standards which may be prescribed pursuant to the following: (a) institution of environmental quality control measures under the National Environmental Policy Act of 1969 (P.L. 91–190) and Executive Order (E.O.) 11514; (b) notification of violating facilities pursuant to E.O. 11738; (c) protection of wetlands pursuant to E.O. 11990; (d) evaluation of flood hazards in floodplains in accordance with E.O. 11988; (e) assurance of project consistency with the approved State management program developed under the Coastal Zone Management Act of 1972 (16 U.S.C. §§ 1451 et seq.); (f) conformity of Federal actions to State (Clear Air) Implementation Plans under Section 176(c) of the Clear Air Act of 1955, as amended (42 U.S.C. §§ 7401 et seq.); (g) protection of underground sources of drinking water under the Safe Drinking Water Act of 1974, as amended, (P.L. 93–523); and (h) protection of endangered species under the Endangered Species Act of 1973, as amended, (P.L. 93–205).

12. Will comply with the Wild and Scenic Rivers Act of 1968 (16 U.S.C. §§ 1271 et seq.) related to protecting components or potential components of the national wild and scenic rivers system.

13. Will assist the awarding agency in assuring compliance with Section 106 of the National Historic Preservation Act of 1966, as amended (16 U.S.C. 470) E.O. 11593 (identification and protection of historic properties), and the Archaeological and Historic Preservation Act of 1974 (16 U.S.C. 469a–1 et seq.).

14. Will comply with P.L. 93–348 regarding the protection of human subjects involved in research, development, and related activities supported by this award of assistance.

15. Will comply with the Laboratory Animal Welfare Act of 1966 (P.L. 89–544, as amended, 7 U.S.C. 2131 et seq.) pertaining to the care, handling, and treatment of warm blooded animals held for research, teaching, or other activities supported by this award of assistance.

16. Will comply with the Lead-Based Paint Poisoning Prevention Act (42 U.S.C. §§ 4801 et seq.) which prohibits the use of lead based paint in construction or rehabilitation of residence structures.

17. Will cause to be performed the required financial and compliance audits in accordance with the Single Audit Act of 1984 or OMB Circular No. A–133, Audits of Institutions of Higher Learning and other Non-profit Institutions.

18. Will comply with all applicable requirements of all other Federal laws, executive orders, regulations and policies governing this program.

_____

Signature of authorized certifying official

_____

Title

_____

Applicant organization

_____

Date submitted

Certification Regarding Debarment, Suspension, and Other Responsibility Matters—Primary Covered Transactions

Instructions for Certification

1. By signing and submitting this proposal, the prospective primary participant is providing the certification set out below.

2. The inability of a person to provide the certification required below will not necessarily result in denial of participation in this covered transaction. The prospective participant shall submit an explanation of why it cannot provide the certification set out below. The certification or explanation will be considered in connection with the department or agency's determination whether to enter into this transaction. However, failure of the prospective primary participant to furnish to certification or an explanation shall disqualify such person from participation in this transaction.

3. The certification in this clause is a material representation of fact upon which reliance placed when the department or agency determined to enter into this transaction. If it is later determined that the prospective primary participant knowingly rendered an erroneous certification, in addition to other remedies available to the Federal Government, the department or agency may terminate this transaction for cause or default.

4. The prospective primary participant shall provide immediate written notice to the department or agency to which this proposal is submitted if at any time the prospective primary participant learns that its certification was erroneous when submitted or has become erroneous by reason of changed circumstances.

5. The terms covered transaction, debarred, suspended, ineligible, lower tier covered transaction, participant, person, primary covered transaction, principal, proposal, and voluntarily excluded, as used in this clause, have the meanings set out in the Definitions and Coverage sections of the rules implementing Executive Order 12549. You may contact the department or agency to which this proposal is being submitted for assistance in obtaining a copy of those regulations.

6. The prospective primary participant agrees by submitting this proposal that, should the proposed covered transaction be entered into, it shall not knowingly enter into any lower tier covered transaction with a person who is proposed for debarment under 48 CFR part 9, subpart 9.4, debarred, suspended, declared ineligible, or voluntarily excluded from participation in this covered transaction, unless authorized by the department or agency entering into this transaction.

7. The prospective primary participant further agrees by submitting this proposal that it will include the clause titled ''Certification Regarding Debarment, Suspension, Ineligibility and Voluntary Exclusion-Lower Tier Covered Transaction,'' provided by the department or agency entering into this covered transaction, without modification, in all lower tier covered transaction and in all solicitations for lower tier covered transactions.

8. A participant in a covered transaction may rely upon a certification of a prospective participant in a lower tier covered transaction that it is not proposed for debarment under 48 CFR part 9, subpart 9.4, debarred, suspended, ineligible, or voluntarily excluded from the covered transaction, unless it knows that the certification is erroneous. A participant may decide the method and frequency by which it determines the eligibility of its principals. Each participant may, but is not required to, check the List of Parties Excluded from Federal Procurement and Nonprocurement Programs.

9. Nothing contained in the foregoing shall be construed to require establishment of a system of records in order to render in good faith the certification required by this clause. The knowledge and information of a participation is not required to exceed that which is normally possessed by a prudent person in the ordinary course of business dealings.

10. Except for transactions authorized under paragraph 6 of these instructions, if a participant in a covered transaction knowingly enters into a lower tier covered transaction with a person who is a proposed for debarment under 48 CFR part 9, subpart 9.4, suspended, debarred, ineligible, or voluntarily excluded from participation in this transaction, in addition to other remedies available to the Federal Government, the department or agency may terminate this transaction for cause or default.

* * * * *

Certification Regarding Debarment, Suspension, and Other Responsibility Matters—Primary Covered Transactions

(1) The prospective primary participants certifies to the best of its knowledge and belief, that it and its principals:

(a) Are not presently debarred, suspended, proposed for debarment, declared ineligible, or voluntarily excluded by any Federal department or agency;

(b) Have not within a three-year period preceding this proposal been convicted of or had a civil judgment rendered against them for commission of fraud or a criminal offense in connection with obtaining, attempting to obtain, or performing a public (Federal, State or local) transaction or contract under a public transaction; violation of Federal or State antitrust statutes or commission of embezzlement, theft, forgery, bribery, falsification or destruction of records, making false statements, or receiving stolen property;

(c) Are not presently indicted for or otherwise criminally or civilly charged by a governmental entity (Federal, State or local) with commission of any of the offenses enumerated in paragraph (1)(b) of this certification; and

(d) Have not within a three-year period preceding this application/proposal had one or more public transactions (Federal, State or local) terminated for cause or default.

(2) Where the prospective primary participant is unable to certify to any of the statements in this certification, such prospective participant shall attach an explanation to this proposal.

Certification Regarding Debarment, Suspension, Ineligibility and Voluntary Exclusion—Lower Tier Covered Transactions

Instruction for Certification

1. By signing and submitting this proposal, the prospective lower tier participant is providing the certification set out below.

2. The certification in this clause is a material representation of fact upon which reliance was placed when this transaction was entered into. If it is later determined that the prospective lower tier participant knowingly rendered an erroneous certification, in addition to other remedies available to the Federal Government the department or agency with which this transaction originated may pursue available remedies, including suspension and/or debarment.

2. The prospective lower tier participant shall provide immediate written notice to the person to which this proposal is submitted if at any time the prospective lower tier participant learns that its certification was erroneous when submitted or had become erroneous by reason of changed circumstances.

4. The terms covered transaction, debarred, suspended, ineligible, lower tier covered transaction, participant, person, primary covered transaction, principal, proposal, and voluntarily excluded, as used in this clause, have the meaning set out in the Definitions and Coverage sections of rules implementing Executive Order 12549. You may contact the person to which this proposal is submitted for assistance in obtaining a copy of those regulations.

5. The prospective lower tier participant agrees by submitting this proposal that, [Page 33043] should the proposed covered transaction be entered into, it shall not knowingly enter into any lower tier covered transaction with a person who is proposed for debarment under 48 CFR part 9, subpart 9.4, debarred, suspended, declared ineligible, or voluntarily excluded from participation in this covered transaction, unless authorized by the department or agency with which this transaction originated.

6. The prospective lower tier participant further agrees by submitting this proposal that it will include this clause titled ''Certification Regarding Debarment, Suspension, Ineligibility and Voluntary Exclusion-Lower Tier Covered Transaction,'' without modification, in all lower tier covered transactions and in all solicitations for lower tier covered transactions.

7. A participation in a covered transaction may rely upon a certification of a prospective participant in a lower tier covered transaction that it is not proposed for debarment under 48 CFR part 9, subpart 9.4, debarred, suspended, ineligible, or voluntarily excluded from covered transaction, unless it knows that the certification is erroneous. A participant may decide the method and frequency by which it determines the eligibility of its principals. Each participant may, but is not required to, check the List of Parties Excluded from Federal Procurement and Nonprocurement Programs.

8. Nothing contained in the foregoing shall be construed to require establishment of a system of records in order to render in good faith the certification required by this clause. The knowledge and information of a participant is not required to exceed that which is normally possessed by a prudent person in the ordinary course of business dealings.

9. Except for transactions authorized under paragraph 5 of these instructions, if a participant in a covered transaction knowingly enters into a lower tier covered transaction with a person who is proposed for debarment under 48 CFR part 9, subpart 9.4, suspended, debarred, ineligible, or voluntarily excluded from participant in this transaction, in addition to other remedies available to the Federal Government, the department or agency with which this transaction originated may pursue available remedies, including suspension and/or debarment.

* * * * *

Certification Regarding Debarment, Suspension, Ineligibility an Voluntary Exclusion—Lower Tier Covered Transaction

(1) The prospective lower tier participant certifies, by submission of this proposal, that neither it nor its principals is presently debarred, suspended, proposed for debarment, declared ineligible, or voluntarily

excluded from participation in this transaction by any Federal department or agency.

(2) Where the prospective lower tier participant is unable to certify to any of the statements in this certification, such prospective participant shall attach an explanation to this proposal.

This certification is required by the regulations implementing the Drug-Free Workplace Act of 1988: 45 CFR Part 76, Subpart, F. Sections 76.630 (c) and (d)(2) and 76.645 (a)(1) and (b) provide that a Federal agency may designate a central receipt point for STATE-WIDE AND STATE AGENCY-WIDE certifications, and for notification of criminal drug convictions. For the Department of Health and Human Services, the central pint is: Division of Grants Management and Oversight, Office of Management and Acquisition, Department of Health and Human Services, Room 517–D, 200 Independence Avenue, SW., Washington, DC 20201.

Certification Regarding Drug-Free Workplace Requirements (Instructions for Certification)

1. By signing and/or submitting this application or grant agreement, the grantee is providing the certification set out below.

2. The certification set out below is a material representation of fact upon which reliance is placed when the agency awards the grant. If it is later determined that the grantee knowingly rendered a false certification, or otherwise violates the requirements of the Drug-Free Workplace Act, the agency, in addition to any other remedies available to the Federal Government, may take action authorized under the Drug-Free Workplace Act.

3. For grantees other than individuals, Alternate I applies.

4. For grantees who are individuals, Alternate II applies.

5. Workplaces under grants, for grantees other than individuals, need not be identified on the certification. If known, they may be identified in the grant application. If the grantee does not identify the workplaces at the time of application, or upon award, if there is no application, the grantee must keep the identity of the workplace(s) on file in its office and make the information available for Federal inspection. Failure to identify all known workplaces constitutes a violation of the grantee's drug-free workplace requirements.

6. Workplace identifications must include the actual address of buildings (or parts of buildings) or other sites where work under the grant takes place. Categorical descriptions may be used (e.g., all vehicles of a mass transit authority or State highway department while in operation, State employees in each local unemployment office, performers in concert halls or radio studios).

7. If the workplace identified to the agency changes during the performance of the grant, the grantee shall inform the agency of the change(s), if it previously identified the workplaces in question (see paragraph five).

8. Definitions of terms in the Nonprocurement Suspension and Debarment common rule and Drug-Free Workplace common rule apply to this certification. Grantees' attention is called, in particular, to the following definitions from these rules:

Controlled substance means a controlled substance in Schedules I through V of the Controlled Substances Act (21 U.S.C. 812) and as further defined by regulation (21 CFR 1308.11 through 1308.15);

Conviction means a finding of guilt (including a plea of nolo contendere) or imposition of sentence, or both, by any judicial body charged with the responsibility to determine violations of the Federal or State criminal drug statutes;

Criminal drug statute means a Federal or non-Federal criminal statute involving the manufacture, distribution, dispensing, use, or possession of any controlled substance;

Employee means the employee of a grantee directly engaged in the performance of work under a grant, including: (i) All direct charge employees; (ii) All indirect charge employees unless their impact or involvement is insignificant to the performance of the grant; and (iii) Temporary personnel and consultants who are directly engaged in the performance of work under the grant and who are on the grantee's payroll. This definition does not include workers not on the payroll of the grantee (e.g., volunteers, even if used to meet a matching requirement); consultants or independent contractors not on the grantee's payroll; or employees of subrecipients or subcontractors in covered workplaces).

Certification Regarding Drug-Free Workplace Requirements

Alternate I. (Grantees Other Than Individuals)

The grantee certifies that it will or will continue to provide a drug-free workplace by:

(a) Publishing a statement notifying employees that the unlawful manufacture, distribution, dispensing, possession, or use of a controlled substance is prohibited in the grantee's workplace and specifying the actions that will be taken against employees for violation of such prohibition;

(b) Establishing an ongoing drug-free awareness program to inform employees about—

(1) The dangers of drug abuse in the workplace;

(2) The grantee's policy of maintaining a drug-free workplace;

(3) Any available drug counseling, rehabilitation, and employee assistance programs; and

(4) The penalties that may be imposed upon employees for drug abuse violations occurring in the workplace;

(c) Making it a requirement that each employee to be engaged in the performance of the grant be given a copy of the statement required by paragraph (a);

(d) Notifying the employee in the statement required by paragraph (a) that, as a condition of employment under the grant, the employee will—

(1) Abide by the terms of the statement; and

(2) Notify the employer in writing of his or her conviction for a violation of a criminal drug statute occurring in the workplace no later than five calendar days after such conviction;

(e) Notifying the agency in writing, within ten calendar days after receiving notice under paragraph (d)(2) from an employee or otherwise receiving actual notice of such conviction. Employers of convicted employees must provide notice, including position title, to every grant officer or other designee on whose grant activity the convicted employee was working, unless the Federal agency has designated a central point for the receipt of such notices. Notice shall include the identification numbers (s) of each affected grant;

(f) Taking one of the following actions, within 30 calendar days of receiving notice under paragraph (d)(2), with respect to any employee who is so convicted—

(1) Taking appropriate personnel action against such an employee, up to and including termination, consistent with the requirements of the Rehabilitation Act of 1973, as amended; or

(2) Requiring such employee to participate satisfactorily in a drug abuse assistance or rehabilitation program approved for such purposes by a Federal, State, or local health, law enforcement, or other appropriate agency;

(g) Making a good faith effort to continue to maintain a drug-free workplace through implementation of paragraphs (a), (b), (c), (d), (e) and (f).

(B) The grantee may insert in the space provided below the site(s) for the performance of work done in connection with the specific grant.

Place of Performance (Street address, city, county, state, zip code)

_____

_____

Check ☐ if there are workplaces on file that are not identified here.

Alternate II. (Grantees Who Are Individuals)

(a) The grantee certifies that, as a condition of the grant, he or she will not engage in the unlawful manufacture, distribution, dispensing, possession, or use of a controlled substance in conducting any activity with the grant;

(b) If convicted of a criminal drug offense resulting from a violation occurring during the conduct of any grant activity, he or she will report the conviction, in writing, within 10 calendar days of the conviction, to every grant officer or other designee, unless the Federal agency designates a central point for the receipt of such notices. When notice is made to such a central point, it shall include the identification number(s) of each affected grant.

[55 FR 21690, 21702, May 25, 1990]

Certification Regarding Lobbying

Certification for Contracts, Grants, Loans, and Cooperative Agreements

The undersigned certifies, to the best of his or her knowledge and belief, that:

(1) No Federal appropriated funds have been paid or will be paid, by or on behalf of the undersigned, to any person for influencing or attempting to influence an officer or employee of an agency, a Member

of Congress, an officer or employee of Congress, or an employee of a Member of Congress in connection with the awarding of any Federal contract, the making of any Federal grant, the making of any Federal loan, the entering into of any cooperative agreement, and the extension, continuation, renewal, amendment, or modification of any Federal contract, grant, loan, or cooperative agreement.

(2) If any funds other than Federal appropriated funds have been paid or will be paid to any person for influencing or attempting to influence an officer or employee of any agency, a Member of Congress, an officer or employee of Congress, or an employee of a Member of Congress in connection with this Federal contract, grant, loan, or cooperative agreement, the undersigned shall complete and submit Standard Form—LLL, ''Disclosure Form to Report Lobbying,'' in accordance with its instructions.

(3) The undersigned shall require that the language of this certification be included in the award documents for all subawards at all tiers (including subcontracts, subgrants, and contracts under grants, loans, and cooperative agreements) and that all subrecipients shall certify and disclose accordingly.

This certification is a material representation of fact upon which reliance was placed when this transaction was made or entered into. Submission of this certification is a prerequisite for making or entering into this transaction imposed by section 1352, title 31, U.S. Code. Any person who fails to file the required certification shall be subject to a civil penalty of not less than $10,000 and not more than $100,000 for each such failure.

Statement for Loan Guarantees and Loan Insurance

The undersigned states, to the best of his or her knowledge and belief, that:

If any funds have been paid or will be paid to any person for influencing or attempting to influence an officer or employee of any agency, a Member of Congress, an officer or employee of Congress, or an employee of a Member of Congress in connection with this commitment providing for the United States to insure or guarantee a loan, the undersigned shall complete and submit Standard Form—LLL, ''Disclosure Form to Report Lobbying,'' in accordance with its instructions. Submission of this statement is a prerequisite for making or entering into this transaction imposed by section 1352, title 31, U.S. Code. Any person who fails to file the required statement shall be subject to a civil penalty of not less than $10,000 and not more than $100,000 for each such failure.

_____

Signature

_____

Title

_____

Organization

_____

Date

BILLING CODE 4184–01–P

DISCLOSURE OF LOBBYING ACTIVITIES

Approved by OMB
0348-0046

Complete this form to disclose lobbying activities pursuant to 31 U.S.C. 1352
(See reverse for public burden disclosure.)

1. Type of Federal Action:	2. Status of Federal Action:	3. Report Type:
☐ a. contract b. grant c. cooperative agreement d. loan e. loan guarantee f. loan insurance	☐ a. bid/offer/application b. initial award c. post-award	☐ a. initial filing b. material change **For material change only** Year_____ Quarter_____ date of last report_____

4. Name and Address of Reporting Entity: ☐ Prime ☐ Subawardee Tier _____, *if known.* Congressional District, *if known*	5. If Reporting Entity in No. 4 is Subawardee, Enter Name and Address of Prime: Congressional District, *if known*
6. Federal Department/Agency:	7. Federal Program Name/Description: CFDA Number, *if applicable:*
8. Federal Action Number, *if known*:	9. Award Amount, *if known*: $
10. a. Name and Address of Lobbying Registrant *(if individual, last name, first name, MI):*	b. Individuals Performing Services *(including address if different from No. 10a)* *(last name, first name, MI):*

Items 11 through 15 are deleted.

16. Information requested through this form is authorized by title 31 U.S.C. section 1352. This disclosure of lobbying activities is a material representation of fact upon which reliance was placed by the tier above when this transaction was made or entered into. This disclosure is required pursuant to 31 U.S.C. 1352. This information will be reported to the Congress semi-annually and will be available for public inspection. Any person who fails to file the required disclosure shall be subject to a civil penalty of not less than $10,000 and not more than $100,000 for each such failure.	Signature: _____ Print Name: _____ Title: _____ Telephone No.: _____ Date: _____
Federal Use Only:	Authorized for Local Reproduction Standard Form - LLL

BILLING CODE 4184–01–C

Certification Regarding Environmental Tobacco Smoke

Public Law 103–277, Part C—Environmental Tobacco Smoke, also known as the Pro-Children Act of 1994 (Act), requires that smoking not be permitted in any portion of any indoor routinely owned or leased or contracted for by an entity and used routinely or regularly for provision of health, day care, education, or library services to children under the age of 18, if the services are funded by Federal programs either directly or through State or local governments, by Federal grant, contract, loan, or loan guarantee. The law does not apply to children's services provided in private residences, facilities funded solely by Medicare or Medicaid funds, and portions of facilities used for inpatient drug or alcohol treatment. Failure to comply with the provisions of the law may result in the imposition of a civil monetary penalty of up to $1000 per day and/or the imposition of an administrative compliance order on the responsible entity.

By signing and submitting this application the applicant/grantee certifies that it will comply with the requirements of the Act. The applicant/grantee further agrees that it will require the language of this certification to be included in any subawards which contain provisions for the children's services and that all subgrantees shall certify accordingly.

[FR Doc. 97–15705 Filed 6–13–97; 8:45 am]

BILLING CODE 4184–01–M

DEPARTMENT OF HEALTH AND HUMAN SERVICES

Substance Abuse and Mental Health Services Administration

Grant to the Farm Resource Center, Inc.

AGENCY: Center for Mental Health Services (CMHS), Substance Abuse and Mental Health Services Administration (SAMHSA), DHHS.

ACTION: Planned single-source award to support mental health outreach to coal miners, farmers, and their families.

SUMMARY: This notice is to provide information to the public concerning a planned single-source award by the CMHS/SAMHSA to the Farm Resource Center (FRC) of Cairo, Illinois, to fund the ''Mental Health Outreach to Coal Miners, Farmers, and their Families'' project. Upon receipt of a satisfactory application that is recommended for approval by an Initial Review Group and the CMHS National Advisory Council, up to $300,000 in Federal funds may be awarded to the FRC for each of the 2 years of this program.

This is not a formal request for applications. Grant funds will be provided only to the FRC.

Authority/Justification: This grant will be made under the authority of Section 520A of the Public Health Service Act (42 USC 290bb–32).

Eligibility for this grant award is limited to the Farm Resource Center (FRC) of Cairo, Illinois. The FRC has provided mental health and substance abuse outreach services in rural Illinois since 1986. FRC has provided counseling to farmers, coal miners and their families, established a Statewide hotline, and utilized outreach counselors to work with rural families in their homes to address problems such as depression, alcoholism and domestic violence.

FRC is uniquely qualified to carry out the goals of this program in that it has the distinction of being the only suitably located organization with extensive experience in linking coal miners, farmers, and their families with mental health and substance abuse services. As part of their program, FRC has recruited, trained, and dispatched volunteers to provide outreach and counseling services to the target population. Further, because of this and their years of experience and organizational readiness, the FRC can deliver services immediately to those in need.

Background: A significant portion of the adult population in the United States reports experiencing personal or emotional problems in the course of a year. Half of these people say they are unable to solve their problems, and approximately one-third report they are unable to do anything to make their problems more bearable; yet relatively few seek help. Therefore, outreach services are important to engage more persons into appropriate services. Outreach, when carried out aggressively, can engage and empower coal miners, farmers, and their families by giving them access to needed mental health services.

The effects of economic stress are pervasive in rural areas, and coal miners, farmers, and their families have been particularly hard hit. Unemployment and underemployment have resulted in a high incidence of problems including alcohol/drug abuse, family violence, depression, suicides, and other stress-related symptoms. This grant is intended to address the mental health needs of a wide range of rural population groups including the poor, the elderly, the disabled, women (particularly those of child bearing age), and minority populations in Illinois and West Virginia.

The proposed project will serve as a national demonstration site on the development and implementation of outreach to rural families who are experiencing mental illnesses or are at-risk of developing mental illnesses.

Dated: June 10, 1997.

Richard Kopanda,

Executive Officer, SAMHSA.

[FR Doc. 97–15754 Filed 6–13–97; 8:45 am]

BILLING CODE 4162–20–P

DEPARTMENT OF HEALTH AND HUMAN SERVICES

Substance Abuse and Mental Health Services Administration U.S.-Mexico Border Four-State Substance Abuse Initiative

AGENCY: Center for Substance Abuse Prevention (CSAP), Substance Abuse and Mental Health Services Administration (SAMHSA), HHS.

ACTION: Availability of funds for grant awards to the Single State Alcohol and Drug Abuse Agencies (SSAs) of Arizona, California, New Mexico and Texas for delivery of community-based substance abuse prevention programs and services.

SUMMARY: This notice is to inform the public that CSAP is making available approximately $800,000 for four awards of $200,000 each in FY 1997 to these State governments so they may provide community-level substance abuse prevention services in U.S. towns and communities within 60 miles of the U.S.-Mexico Border. Upon receipt of satisfactory applications that are recommended for approval by an Initial Review Group and the CSAP National Advisory Council, Federal funds may be awarded.

Eligibility for these funds is limited to the SSA in the states of Arizona, California, New Mexico and Texas—the only states that are on the U.S.-Mexico border. Grants may be awarded to the SSA, which, in turn, will issue subgrants or contracts for locally developed prevention programs and services. Subrecipients could include: local prevention providers, local civic groups and associations, county prevention councils, and other health-oriented providers that apply on behalf of themselves or on behalf of community-based anti-drug coalitions. Applicants are encouraged to consider community partnerships and coalitions, which may be strategically located and well suited to administer community-based prevention activities along the border.

The U.S.-Mexico Border Initiative is consistent with the ONDCP and HHS/SAMHSA approach for working collaboratively with State agencies and local communities to refine and strengthen their ability to provide more efficient and responsive prevention services. Accordingly, eligibility is

limited to the SSA so that consistent State-wide strategies on substance abuse prevention will be implemented in the targeted border areas. The SSA is also the administrator of the Substance Abuse Prevention and Treatment (SAPT) Block Grant, which sets aside 20 percent of the funds for primary prevention activities. This set-aside is a large resource available to the State for prevention activities, and could be used to expand support for the resources available under this initiative.

The SSA's historic leadership role and commitment to substance abuse prevention, along with the infrastructure developed through the SAPT Block Grant funds, can spur the support of other State and community organizations to ensure that border substance abuse prevention initiatives assume a high priority.

The SSAs are responsible for ensuring community-based prevention program development in all communities within the State. Therefore, SSAs operate at an optimum jurisdictional level to support the type(s) of activities required for overseeing this multi-community, border area effort. In particular, their broad-based authority will help ensure the following: (1) successful implementation of the State evaluation plan, which requires the sharing of data and information across subrecipient projects; (2) optimal use of the State's technical assistance resources to support border efforts implemented with these grant funds; and (3) greater likelihood of sustaining these prevention efforts following the end of the Federal grant period.

Moreover, SSAs have access to both border area and State-wide substance abuse incidence and prevalence data. They are uniquely positioned to track State-wide and border community trends, assess the severity of substance abuse-related problems, and identify appropriately targeted programmatic responses.

Finally, by continuing to work cooperatively with the State Border Health Desks, which were established to address the specific needs of the border, SSAs further strengthen their ability and authority to carry out the U.S.-Mexico Border Initiative. Working together, the SSAs and the Border Health Desks help ensure that the most appropriate subrecipient communities with concentrated substance abuse prevention needs will receive these limited grant funds.

Authority: Awards will be made under the authority of Section 501 (d) (5) of the Public Health Service Act, as amended (42 USC 290aa).

The Catalog of Federal Domestic Assistance (CDFA) number is 93.230.

CONTACT: Dan Fletcher, Division of State and Community Systems Development, Center for Substance Abuse Prevention, Substance Abuse and Mental Health Services Administration, Rockwall II, 9th floor, 5600 Fishers Lane, Rockville, MD 20857, 301) 443–5660.

Dated: June 10, 1997.

Richard Kopanda,

Executive Officer, SAMHSA.

[FR Doc. 97–15706 Filed 6–13–97; 8:45 am]

BILLING CODE 4162–20–P

DEPARTMENT OF HOUSING AND URBAN DEVELOPMENT

[Docket No. FR–4200–N–71]

Notice of Proposed Information Collection for Public Comment

AGENCY: Government National Mortgage Association, HUD.

ACTION: Notice.

SUMMARY: The proposed information collection requirement described below will be submitted to the Office of Management and Budget (OMB) for review, as required by the Paperwork Reduction Act. The Department is soliciting public comments on the subject proposal.

DATES: Comments due: August 15, 1997.

ADDRESSES: Interested persons are invited to submit comments regarding this proposal. Comments should refer to the proposal by name and/or OMB Control Number and should be sent to: Sonya K. Suarez, Government National Mortgage Association, Office of Policy, Program and Risk Management, Department of Housing and Urban Development, 451—7th Street, SW., Room 6226, Washington, DC 20410.

FOR FURTHER INFORMATION CONTACT: Sonya K. Suarez, on (202) 708–2772 (this is not a toll-free number) for copies of the proposed forms and other available documents.

SUPPLEMENTARY INFORMATION: The Department will submit the proposed information collection to OMB for review, as required by the Paperwork Reduction Act of 1995 (44 U.S.C. Chapter 35, as amended).

The Notice is soliciting comments from members of the public and affected agencies concerning the proposed collection of information to: (1) Evaluate whether the proposed collection of information is necessary for the proper performance of the functions of the agency, including whether the information will have practical utility; (2) Evaluate the accuracy of the agency's estimate of the burden of the proposed collection of information; (3) Enhance the quality, utility, and clarity of the information to be collected; and (4) Minimize the burden of the collection of information on those who are to respond, including through the use of appropriate automated collection techniques or other forms of information technology, e.g., permitting electronic submission of responses.

This Notice also lists the following information:

Title of Proposal: Issuer's Monthly Remittance Advice

OMB Control Number: 2503–0015

Description of the need for the information and proposed use: The collection of information is used to advise each security holder of the current month's account transactions and calculation of holder's fractional share of total cash distribution.

Agency form numbers: HUD 11714 and HUD 11714SN

Members of affected public: Business or other for-profit and the Federal Government

Estimation of the total number of hours needed to prepare the information collection including number of respondents, frequency of response, and hour of response:

Reporting Burden:

Total responses per respondent = * 5% of 372,886 outstanding pools = 18,644+620 issuers = 19,264.

Total annual responses = 19,264×12 months = 231,168.

Total burden hours = 231,168×(1/60 hr) = 3,853.

* Average monthly responses per respondent.

Status: Extension of a currently approved collection.

Authority: Section 3506 of the Paperwork Reduction Act of 1995, 44 U.S.C. Chapter 35, as amended.

Dated: June 2, 1997.

George S. Anderson,

Executive Vice President, Government National Mortgage, Association.

[FR Doc. 97–15671 Filed 6–13–97; 8:45 am]

BILLING CODE 4210–01–M

DEPARTMENT OF HOUSING AND URBAN DEVELOPMENT

[Docket No. FR–4200–N–70]

Notice of Proposed Information Collection: Comment Request

AGENCY: Office of Lead Hazard Control, HUD.

ACTION: Notice.

SUMMARY: The proposed information collection requirement described below will be submitted to the Office of Management and Budget (OMB) for review, as required by the Paperwork Reduction Act. The Department is soliciting public comments on the subject proposal.

DATES: Comments due: August 15, 1997.

ADDRESSES: Interested persons are invited to submit comments regarding this proposal. Comments should refer to the proposal by name and/or OMB Control Number and should be sent to: Ms. Ruth Wright, Reports Liaison Officer, Office of Lead Hazard Control, Department of Housing and Urban Development, 451—7th Street, SW., Room B–133, Washington, DC 20410.

FOR FURTHER INFORMATION CONTACT: Barbara A. Haley, (202) 755–1805, ext. 126 (this is not a toll-free number), for copies of the proposed data collection instruments.

SUPPLEMENTARY INFORMATION: The Department will submit the proposed information collection to OMB for review, as required by the Paperwork Reduction Act of 1995 (44 U.S.C. Chapter 35, as amended).

The Notice is soliciting comments from members of the public and affected agencies concerning the proposed collection of information to: (1) Evaluate whether the proposed collection of information is necessary for the proper performance of the functions of the agency, including whether the information will have practical utility; (2) evaluate the accuracy of the agency's estimate of the burden of the proposed collection of information; (3) enhance the quality, utility, and clarity of the information to be collected; and (4) minimize the burden of the collection of information on those who are to respond; including through the use of appropriate automated collection techniques or other forms of information technology, e.g., permitting electronic submission of responses.

This Notice also lists the following information:

Title of Proposal: Current Population Survey (CPS) Lead Paint Hazards Awareness Supplement.

OMB Control Number, if applicable: 25390006.

Description of the need for the information and proposed use: The Department of Housing and Urban Development is requesting renewal of clearance for the collection of data concerning the Lead Paint Hazards Awareness Supplement to be conducted in conjunction with the December 1997 CPS. Title 13, United States Code, Section 182; and Title 29 United States Code, Sections 1–9, authorize the collection of CPS information. The Census Bureau will collect the supplemental data in compliance with the Privacy Act of 1974 and OMB Circular A–130. The Department of Housing and Urban Development (HUD) sponsored the supplement questions, which were previously collected in December 1994.

This survey provides information that is suitable for the planning and evaluation of Title X of the Housing and Community Development Act of 1992. The supplement, which was conducted in December 1994, will serve as a benchmark for determining awareness to the hazards of lead-based paint before the disclosure requirement of Title X which went into effect in December 1996.

The disclosure requirement mandates that landlords and sellers of dwellings built before 1978 disclose to potential renters or buyers the potential for the presence of lead-based paint and the hazards associated with lead-based paint. The 1977 supplement will be used to measure the change in awareness for the hazards associated with lead-based paint since the disclosure requirement went into effect and assist state and local governments with lead hazard awareness education program development.

The lead paint hazards awareness information will be collected by both personal visit and telephone interviews in conjunction with the regular December CPS interviewing. All interviews are conducted using computer-assisted interviewing.

Agency form numbers, if applicable: There are no forms. All interviewing is computerized.

Members of affected public: Households.

Estimation of the total numbers of hours needed to prepare the information collection including number of respondents, frequency of response, and hours of response:

Estimated Number of Respondents: 48,000 per month.

Estimated Time Per Response: 8.3 minutes.

Frequency of Response: Once—December 1997.

Estimated Total Annual Burden Hours: 6,640.

Estimated Total Annual Cost: $388,172.

Status of the proposed information collection: Revision of a currently approved collection.

Authority: Section 3506 of the Paperwork Reduction Act of 1995, 44 U.S.C. Chapter 35, as amended.

Dated: May 28, 1997.

David E. Jacobs,

Director, Office of Lead Hazard Control.

[FR Doc. 97–15672 Filed 6–13–97; 8:45 am]

BILLING CODE 4210–01–M

DEPARTMENT OF HOUSING AND URBAN DEVELOPMENT

[Docket No. FR–4200–N–68]

Notice of Proposed Information Collection for Public Comments

AGENCY: Office of the Assistant Secretary for Public and Indian Housing, HUD.

ACTION: Notice.

SUMMARY: The proposed information collection requirement described below will be submitted to the Office of Management and Budget (OMB) for review, as required by the Paperwork Reduction Act. The Department is soliciting public comments on the subject proposal.

DATES: Comments due: August 15, 1997.

ADDRESSES: Interested persons are invited to submit comments regarding this proposal. Comments should refer to the proposal by name and/or OMB Control Number and should be sent to: Mildred M. Hamman, Reports Liaison Officer, Public and Indian Housing, Department of Housing and Urban Development, 451 7th Street, SW., Room 4238, Washington, DC 20410–5000.

FOR FURTHER INFORMATION CONTACT: Mildred M. Hamman, (202) 708–3642, extension 4128, for copies of the proposed forms and other available documents. (This is not a toll-free number.)

SUPPLEMENTARY INFORMATION: The Department will submit the proposed information collection to OMB for review, as required by the Paperwork Reduction Act of 1995 (44 U.S.C. Chapter 35, as amended).

This Notice is soliciting comments from members of the public and affected agencies concerning the proposed collection of information to: (1) Evaluate whether the proposed collection of information is necessary for the proper performance of the functions of the agency, including whether the information will have practical utility; (2) evaluate the accuracy of the agency's estimate of the burden of the proposed collection of information; (3) enhance the quality, utility, and clarity of the information to be collected; and (4) minimize the burden of the collection of information on those who are to respond, including through the use of

appropriate automated collection techniques or other forms of information technology; e.g., permitting electronic submission of responses.

This Notice also lists the following information:

Title of Proposal: PHA-Owned or Leased Projects, Maintenance and Operation—Resident Allowance for Utilities Documentation.

OMB Control Number: 2577–0062.

Description of the need for the information and proposed use: Housing Agencies (HAs) provide their residents with reasonable amounts of utilities as part of Family Gross Rents. These amounts are called Tenant Allowance for Utilities. HUD regulations provide criteria which HAs are to use to determine utility allowances. In order for HAs to prove that their allowances reflect reasonable amounts of utilities, there is a need for documentation on how it is determined.

Agency form numbers, if applicable: None.

Members of affected public: State, Local or Tribal Governments Estimation of the total number of hours needed to prepare the information collection including number of respondents, frequency of response, and hours of response: 3400 respondents, one-time documentation, 1.9 hour average per documentation, 6,236 total recordkeeping burden.

Status of the proposed information collection: Reinstatement.

Authority: Section 3506 of the Paperwork Reduction Act of 1995, 44 U.S.C. Chapter 35, as amended.

Dated: June 5, 1997.

Kevin Emanuel Marchman,

Acting Assistant Secretary for Public and Indian Housing.

[FR Doc. 97–15673 Filed 6–13–97; 8:45 am]

BILLING CODE 4210–33–M

DEPARTMENT OF HOUSING AND URBAN DEVELOPMENT

[Docket No. FR–4238–N–03]

Notice of Proposed Information Collection for Public Comment

AGENCY: Office of the Assistant Secretary for Community Planning and Development, HUD.

ACTION: Notice.

SUMMARY: The proposed information collection requirement described below will be submitted to the Office of Management and Budget (OMB) for review, as required by the Paperwork Reduction Act. The Department is soliciting public comments on the subject proposal.

DATES: Comments due: August 15, 1997.

ADDRESSES: Interested persons are invited to submit comments regarding this proposal. Comments should refer to the proposal by name and/or OMB Control Number and should be sent to: Reports Liaison Officer, Shelia Jones, Department of Housing & Urban Development, 451—7th Street, SW., Room 7232, Washington, DC 20410.

FOR FURTHER INFORMATION CONTACT: Cliff Taffet, telephone (202) 708–3226 (this is not a toll-free number) for copies of the proposed forms and other available documents.

SUPPLEMENTARY INFORMATION: The Department will submit the proposed information collection to OMB for review, as required by the Paperwork Reduction Act of 1995 (44 U.S.C. Chapter 35, as amended).

The Notice is soliciting comments from members of the public and affecting agencies concerning the proposed collection of information to: (1) Evaluate whether the proposed collection of information is necessary for the proper performance of the functions of the agency, including whether the information will have practical utility; (2) Evaluate the accuracy of the agency's estimate of the burden of the proposed collection of information; (3) Enhance the quality, utility, and clarity of the information to be collected; and (4) Minimize the burden of the collection of information on those who are to respond, including through the use of appropriate automated collection techniques or other forms of information technology, e.g., permitting electronic submission of responses.

This Notice also lists the following information:

Title of Proposal: Notice of Funding Availability (NOFA) for the Homeownership Zone Program.

OMB Control Number, if applicable: 2506–0164.

Description of the need for the information and proposed use: The information collection is essential so that HUD staff may determine the eligibility, qualifications and capability of applicants to carry out Homeownership Zone activities, HUD will review the information provided by the applicants against the selection criteria contained in the NOFA in order to rate and rank the applications and select the best and most qualified individual applications for funding.

Agency form numbers, if applicable: N/A.

Members of affected public: Eligible applicants are units of general local government.

Estimation of the total numbers of hours needed to prepare the information collection including number of respondents, frequency of response, and hours of response:

The estimated number of respondents is 70.

The proposed frequency of the response to the collection of information is one-time.

Total Estimated Hours (@ 100 hours per response): 7000.

Status of the proposed information collection: OMB has approved this information collection on an emergency basis. This approval extends until August 31, 1997.

Authority: Section 3506 of the Paperwork Reduction Act of 1995, 44 U.S.C. Chapter 35, as amended.

Dated: June 9, 1997.

Jacquie Lawing,

General Deputy Assistant Secretary.

[FR Doc. 97–15674 Filed 6–13–97; 8:45 am]

BILLING CODE 4210–29–M

DEPARTMENT OF THE INTERIOR

Fish and Wildlife Service

North American Wetlands Conservation Council; Meeting Announcement

AGENCY: Fish and Wildlife Service, Interior.

ACTION: Notice of meeting.

SUMMARY: The North American Wetlands Conservation Council (Council) will meet on July 9 to review proposals for funding submitted pursuant to the North American Wetlands Conservation Act. Upon completion of the Council's review, proposals will be submitted to the Migratory Bird Conservation Commission for funding approval. The meeting is open to the public.

DATES: July 9, 1997, 9:00 a.m.

ADDRESSES: The meeting will be held at the Lombard Hotel, 2 Lombard Place, Winnipeg, Manitoba, Canada (204–957–1350). The North American Wetland Conservation Council Coordinator is located at the Fish and Wildlife Service, Arlington Square Building, 4401 N. Fairfax Drive, Room 110, Arlington, Virginia 22203.

FOR FURTHER INFORMATION CONTACT: Byron Kenneth Williams, Coordinator, North American Wetlands Conservation Council, (703) 358–1784.

SUPPLEMENTARY INFORMATION: In accordance with the North American Wetlands Conservation Act (Pub. L. 101–233, 103 Stat. 1968, December 13,

1989, as amended), the North American Wetlands Conservation Council is a Federal-State-private body which meets to consider wetland acquisition, restoration, enhancement and management projects for recommendation to and final approval by the Migratory Bird Conservation Commission. Proposals from State, Federal, and private sponsors require a minimum of 50 percent non-Federal matching funds.

Dated: June 6, 1997.

John G. Rogers,

Acting Director, U.S. Fish and Wildlife Service.

[FR Doc. 97–15680 Filed 6–13–97; 8:45 am]

BILLING CODE 4310–55–M

DEPARTMENT OF THE INTERIOR

Bureau of Land Management

[CO–010–07–1020–00–241A]

Northwest Colorado Resource Advisory Council Meeting

AGENCY: Bureau of Land Management, Interior.

ACTION: Notice of meeting.

SUMMARY: The next meetings of the Northwest Colorado Resource Advisory Council will be held on Friday, July 11, 1997, in Craig, Colorado.

DATES: Friday, July 11, 1997.

ADDRESSES: For further information, contact Joann Graham, Bureau of Land Management (BLM), Grand Junction District Office, 2815 H Road, Grand Junction, Colorado 81506; Telephone (970) 244–3037.

SUPPLEMENTARY INFORMATION: The meeting will be held at the Shadow Mountain building, 1055 County Road 7, Craig, Colorado. Agenda items include subcommittee reports, draft 3809 mining regulations, and wilderness inventory update.

All resource advisory council meetings are open to the public. Interested persons may make oral statements at the meetings or submit written statements following the meetings. Per-person time limits for oral statements may be set to allow all interested persons an opportunity to speak.

Summary minutes of council meetings are maintained in both the Grand Junction and Craig District Offices. They are available for public inspection and reproduction during regular business hours within thirty (30) days following the meeting.

Dated: June 4, 1997.

Mark T. Morse,

Grand Junction/Craig District Manager.

[FR Doc. 97–15661 Filed 6–13–97; 8:45 am]

BILLING CODE 4310–70–P

DEPARTMENT OF THE INTERIOR

National Park Service

Notice of Inventory Completion for Native American Human Remains and Associated Funerary Objects in the Possession of Sitka National Historical Park, National Park Service, Sitka, AK

AGENCY: National Park Service

ACTION: Notice

Notice is hereby given in accordance with provisions of the Native American Grave Protection and Repatriation Act (NAGPRA), 25 U.S.C. 3003(d), of the completion of an inventory of human remains and associated funerary objects in the possession of Sitka National Historical Park, National Park Service, Sitka, AK.

A detailed assessment of the human remains and associated funerary objects was made by professional staff of the National Park Service in consultation with representatives of the Sitka Tribe of Alaska and the Central Council of Tlingit and Haida Tribes of Alaska. Representatives of Shee Atika, Incorporated and Sealaska Heritage Foundation have been kept aware of the formal correspondence and consultation results.

In 1958 cremated human remains representing one individual were illegally removed from a burial cave in the Siginaka Islands by National Park Service and University of Alaska personnel following a discussion of the site with Tlingit elders. No known individuals were identified. The 22 associated funerary objects include seventeen wood fragments, four spruce rope fragments, and one hammered copper band.

The cave from which the human remains and associated funerary objects were recovered was identified as a burial site used by Tlingit people following the 1802 Battle of Old Sitka. Documentary evidence, including testimony of Tlingit elders, indicates that the Siginaka Islands are within the territory traditionally used by the Sitka Tlingit. Documentary evidence also indicates that the practice of cremating human remains in the Sitka area was abandoned by the resident Tlingit population after ca. 1880 AD. The exact date of the burial is unknown; however, based on these factors and the presence of the hammered copper band, the remains are likely to date to the 19th century.

Based on the above-mentioned information, officials of the National Park Service have determined that, pursuant to 43 CFR 10.2 (d)(1), the human remains listed above represent the physical remains of a minimum of one individual of Native American ancestry. Officials of the National Park Service have also determined that, pursuant to 25 U.S.C. 3001 (3)(A), the 22 objects listed above are reasonably believed to have been placed with or near individual human remains at the time of death or later as part of a death rite or ceremony. Lastly, officials of the National Park Service have determined that, pursuant to 25 U.S.C. 3001 (2), there is a relationship of shared group identity which can be reasonably traced between these Native American human remains and associated funerary objects and the Sitka Tribe of Alaska.

This notice has been sent to officials of the Sitka Tribe of Alaska, Central Council of Tlingit and Haida Tribes of Alaska, Shee Atika, Incorporated, and Sealaska Heritage Foundation. Representatives of any other Indian tribe that believes itself to be culturally affiliated with these human remains and associated funerary objects should contact Superintendent Gary Gauthier, Sitka National Historical Park, 106 Metlakatla Street, Sitka, Alaska, 99835, telephone (907) 747–6281, before July 16, 1997. Repatriation of the human remains and associated funerary objects to the Sitka Tribe of Alaska may begin after that date if no additional claimants come forward.

Dated: June 6, 1997.

Francis P. McManamon,

Departmental Consulting Archeologist, Manager, Archeology and Ethnography Program.

[FR Doc. 97–15681 Filed 6–13–97; 8:45 am]

BILLING CODE 4310–70–F

DEPARTMENT OF THE INTERIOR

National Park Service

Notice of Intent to Repatriate a Cultural Item from Arizona in the Control of the Tallahassee Museum of History & Natural Science, Tallahassee, FL

AGENCY: National Park Service

ACTION: Notice

Notice is hereby given under the Native American Graves Protection and Repatriation Act, 25 U.S.C. 3005 (a)(2), of the intent to repatriate a cultural item from Arizona in the control of the

Tallahassee Museum of History & Natural Science which meets the definition of ''unassociated funerary object'' under Section 2 of the Act.

The cultural item is a large black ceramic pot with a wide mouth, smooth surface, and a rounded convex base.

In 1962, this pot was donated to the Tallahassee Museum of History & Natural Science by Mr. Ed Komarek of Thomasville, GA. Accession information indicates that in 1960, Mr. Komarek obtained this pot ''from a Hopi Indian who dug it out of a grave'' on Third Mesa, Hopi Reservation, AZ. This pot is consistent with the material culture of precontact Puebloan cultures widely held to be ancestral to the Hopi Tribe in this area. Representatives of the Hopi Tribe states this pot is consistent with ancestral Hopi material culture and funerary practice.

Officials of the Tallahassee Museum of History & Natural Science have determined that, pursuant to 25 U.S.C. 3001 (3)(B), this cultural item is reasonably believed to have been placed with or near individual human remains at the time of death or later as part of the death rite or ceremony and are believed, by a preponderance of the evidence, to have been removed from a specific burial site of an Native American individual. Officials of the Tallahassee Museum of History & Natural Science have also determined that, pursuant to 25 U.S.C. 3001(2), there is a relationship of shared group identity which can be reasonably traced between this item and the Hopi Tribe.

This notice has been sent to officials of the Hopi Tribe. Representatives of any other Indian tribe that believes itself to be culturally affiliated with these objects should contact Linda Deaton, Tallahassee Museum of History & Natural Science, 3945 Museum Drive, Tallahassee, FL 32310, telephone (904) 575–8684 before July 16, 1997. Transfer of control of this object to the Hopi Tribe may begin after that date if no additional claimants come forward.

The National Park Service is not responsible for the determinations within this notice.

Dated: June 10, 1997.

Francis P. McManamon,

Departmental Consulting Archeologist, Manager, Archeology and Ethnography Program.

[FR Doc. 97–15682 Filed 6–13–97; 8:45 am]

BILLING CODE 4310–70–F

DEPARTMENT OF THE INTERIOR

Office of Surface Mining Reclamation and Enforcement

Notice of Proposed Information Collection

AGENCY: Office of Surface Mining Reclamation and Enforcement.

ACTION: Notice and request for comments.

SUMMARY: In compliance with the Paperwork Reduction Act of 1995, the Office of Surface Mining Reclamation and Enforcement (OSM) is announcing that the information collection requests for the titles described below have been forwarded to the Office of Management and Budget (OMB) for review and comment. The information collection requests describe the nature of the information collections and their expected burden and cost.

DATES: Comments must be submitted on or before July 16, 1997 to be assured of consideration.

FOR FURTHER INFORMATION CONTACT: To request a copy of either information collection request, explanatory information and related form, contact John A. Trelease at (202) 208–2783. You may also contact Mr. Trelease at jtreleas@osmre.gov.

SUPPLEMENTARY INFORMATION: The Office of Management and Budget (OMB) regulations at 5 CFR 1320, which implement provisions of the Paperwork Reduction Act of 1995 (Pub. L. 104–13), require that interested members of the public and affected agencies have an opportunity to comment on information collection and recordkeeping activities (see 5 CFR 1320.8(d)). OSM has submitted two requests to OMB to renew its approval of the collections of information found at 30 CFR Part 733, Maintenance of State programs and procedures for substituting Federal enforcement of State programs and withdrawing approval of State programs, and part 785, Requirements for permits for special categories of mining. Surface mining permit applications—minimum requirements for environmental resources. OSM is requesting a 3-year term of approval for these information collection activities.

An agency may not conduct or sponsor, and a person is not required to respond to, a collection of information unless it displays a currently valid OMB control number. The OMB control number for these collections of information are 1029–0025 and 1029–0040, respectively.

As required under 5 CFR 1320.8(d), a **Federal Register** notice soliciting comments on these collections of information was published on March 18, 1997 (62 FR 12839). No comments were received. This notice provides the public with an additional 30 days in which to comment on the following information collection activities:

Title: Maintenance of State programs and procedures for substituting Federal enforcement of State programs and withdrawing approval of State programs, 30 CFR 733.

OMB Control Number: 1029–0025.

Summary: This part provides that any interested person may request the Director of OSM to evaluate a State program by setting forth in the request a concise statement of facts which the person believes establishes the need for the evaluation.

Bureau Form Number: None.

Frequency of Collection: On occasion.

Description of Respondents: Any interested person (individuals, businesses, institutions, organizations).

Total Annual Responses: 1.

Total Annual Burden Hours: 100 hours.

Title: Requirements for permits for special categories of mining, 30 CFR Part 785

OMB Control Number: 1029–0040.

Summary: The information is being collected to meet the requirements of sections 507, 508, 510, 515, 701 and 711 of Public Law 95–87, which require applicants for special types of mining activities to provide descriptions, maps, plans and data of the proposed activity. This information will be used by the regulatory authority in determining if the applicant can meet the applicable performance standards for the special type of mining activity.

Bureau Form Number: None.

Frequency of Collection: On occasion.

Description of Respondents: Applicants for coal mine activities.

Total Annual Responses: 463.

Total Annual Burden Hours: 8,443.

Send comments on the need for the collection of information for the performance of the functions of the agency; the accuracy of the agency's burden estimates; ways to enhance the quality, utility and clarity of the information collection; and ways to minimize the information collection burden on respondents, such as use of automated means of collection of the information, to the following address. Please refer to the appropriate OMB control number in all correspondence.

ADDRESSES: Office of Information and Regulatory Affairs, Office of Management and Budget, Attention: Department of Interior Desk Officer, 725 17th Street, NW., Washington, DC 20503.

Dated: June 6, 1997.

Richard G. Bryson,

Chief, Division of Regulatory Support.

[FR Doc. 97–15645 Filed 6–13–97; 8:45 am]

BILLING CODE 4310–05–M

DEPARTMENT OF JUSTICE

Disability Rights Section, Civil Rights Division Agency Information Collection Activities Under Review

ACTION: Notice of extension of currently approved information collection; Nondiscrimination on the basis of disability in state and local government services (certification).

Purpose: The information collection extension is published to obtain comments from the public and affected agencies. Comments are encouraged and will be accepted until August 15, 1997.

We request written comments and suggestions from the public and affected agencies' concerning the extension of a currently approved collection of information. Your comments should address one or more of the following four points:

(1) Evaluate whether the collection of information is necessary for the proper performance of the function of the agency, including whether the information will have practical utility;

(2) Evaluate the accuracy of the agencies estimate of the burden of the collection of information;

(3) Enhance the quality, utility, and clarity of the information to be collected; and

(4) Minimize the burden of the collection of information on those who are to respond, including through the use of appropriate automated, electronic, mechanical, or other technological collection techniques or other forms of information technology (e.g., permitting electronic submission of responses).

Comments and/or suggestions regarding the item(s) contained in this notice, especially regarding the estimated public burden and associated response time should be directed to John Wodatch (phone number and address listed below). If you have additional comments, suggestions, or need a copy of the proposed information collection instrument with instructions, or additional information, contact John Wodatch, Chief, Disability Rights Section, Civil Rights Division, by calling (800) 514–0301 (Voice) or (800) 514–0383 (TTY) (the Division's ADA Information Line), or write him at U.S. Department of Justice, P.O. Box 66738, Washington, DC 20035–6738.

The information collection is listed below:

(1) Type of information collection. Extension of Currently Approved Collection.

(2) The title of the form/collection. Nondiscrimination on the Basis of Disability in State and Local Government Services (Certification).

(3) The agency form number and applicable component of the Department sponsoring the collection. None.

(4) Affected public who will be asked to respond, as well as a brief abstract: Primary: State, Local or Tribal Government. Under title III of the Americans with Disabilities Act, on the application of a State or local government, the Assistant Attorney General for Civil Rights (or his or her designee) may certify that a State or local building code or similar ordinance that establishes accessibility requirements (Code) meets or exceeds the minimum requirements of the ADA for accessibility and usability of ''places of public accommodation'' and ''commercial facilities.''

(5) An estimate of the total number of respondents and the amount of time estimated for an average respondent to respond: 10 respondents per year at 32 hours per certification.

(6) An estimate of the total public burden (in hours) associated with the collection: 320 hours annual burden.

If additional information is required contact: Mr. Robert B. Briggs, Clearance Officer, United States Department of Justice, Information Management and Security Staff, Justice Management Division, Suite 850, Washington Center, 1001 G Street, NW., Washington, DC 20530.

Dated: June 10, 1997.

Robert B. Briggs,

Department Clearance Officer.

[FR Doc. 97–15665 Filed 6–13–97; 8:45 am]

BILLING CODE 4410–13–M

DEPARTMENT OF JUSTICE

Disability Rights Section, Civil Rights Division Agency Information Collection Activities Under Review

ACTION: Notice of extension of currently approved information collection; nondiscrimination on the basis of disability in state and local Government Services (self-evaluation).

Purpose: The information collection extension is published to obtain comments from the public and affected agencies. Comments are encouraged and will be accepted until August 15, 1997.

We request written comments and suggestions from the public and affected agencies concerning the extension of a currently approved collection of information. Your comments should address one or more of the following four points:

(1) Evaluate whether the collection of information is necessary for the proper performance of the function of the agency, including whether the information will have practical utility;

(2) Evaluate the accuracy of the agencies' estimate of the burden of the collection of information;

(3) Enhance the quality, utility, and clarity of the information to be collected; and

(4) Minimize the burden of the collection of information on those who are to respond, including through the use of appropriate automated, electronic, mechanical, or other technological collection techniques or other forms of information technology (e.g., permitting electronic submission of responses).

Comments and/or suggestions regarding the item(s) contained in the notice, especially regarding the estimated public burden and associated response time should be directed to John Wodatch (phone number and address listed below). If you have additional comments, suggestions, or need a copy of the proposed information collection instrument with instructions, or additional information, contact John Wodatch, Chief, Disability Rights Section, Civil Rights Division, by calling (800) 514–0301 (Voice) or (800) 514–0383 (TTY) (the Division's ADA Information Line), or write him at U.S. Department of Justice, P.O. Box 66738, Washington, DC 20035–6738.

The information collection is listed below:

(1) Type of information collection. Extension of Currently Approved Collection.

(2) The title of the form/collection. Nondiscrimination on the Basis of Disability in State and Local Government Services (Self-Evaluation).

(3) The agency form number and applicable component of the Department sponsoring the collection. None.

(4) Affected public who will be asked to respond, as well as a brief abstract: Primary: State, Local or Tribal Government. Under title II of the Americans with Disabilities Act, State and local governments are required to evaluate their current services, policies, and practices for compliance with the ADA. Under certain circumstances, such entities must also maintain the

results of such self-evaluation on file for public review.

(5) An estimate of the total number of respondents and the amount of time estimated for an average respondent to respond: 15,000 respondents at 6 hours per self-evaluation.

(6) An estimate of the total public burden (in hours) associated with the collection: 90,000 hours annual burden.

If additional information is required contact: Mr. Robert B. Briggs, Clearance Officer, United States Department of Justice, Information Management and Security Staff, Justice Management Division, Suite 850, Washington Center, 1001 G Street, NW., Washington, DC 20530.

Dated: June 10, 1997.

Robert B. Briggs,

Department Clearance Officer.

[FR Doc. 97–15666 Filed 6–13–97; 8:45 am]

BILLING CODE 4410–13–M

DEPARTMENT OF JUSTICE

Disability Rights Section, Civil Rights Division Agency Information Collection Activities Under Review

ACTION: Notice of new information collection; Title II of the Americans with Disabilities Act/Section 504 of the Rehabilitation Act of 1973 Discrimination Complaint Form.

Purpose: The proposed information collection is published to obtain comments from the public and affected agencies. Comments are encouraged and will be accepted until August 15, 1997.

We request written comments and suggestions from the public and affected agencies' concerning the proposed collection of information. Your comments should address one or more of the following four points:

(1) Evaluate whether the collection of information is necessary for the proper performance of the function of the agency, including whether the information will have practical utility;

(2) Evaluate the accuracy of the agencies estimate of the burden of the collection of information;

(3) Enhance the quality, utility, and clarity of the information to be collected; and

(4) Minimize the burden of the collection of information on those who are to respond, including through the use of appropriate automated, electronic, mechanical, or other technological collection techniques or other forms of information technology (e.g., permitting electronic submission of responses).

Comments and/or suggestions regarding the item(s) contained in this notice, especially regarding the estimated public burden and associated response time should be directed to John Wodatch (phone number and address listed below). If you have additional comments, suggestions, or need a copy of the proposed information collection instrument with instructions, or additional information, contact John Wodatch, Chief, Disability Rights Section, Civil Rights Division, by calling (800) 514–0301 (Voice) or (800) 514–0383 (TTY) (the Division's ADA Information Line), or write him at U.S. Department of Justice, P.O. Box 66738, Washington, DC 20035–6738.

The information collection is listed below:

(1) Type of information collection. New Collection.

(2) The title of the form/collection. Title II of the Americans with Disabilities Act/Section 504 of the Rehabilitation Act of 1973 Discrimination Complaint Form.

(3) The agency form number and applicable component of the Department sponsoring the collection. No form number. Disability Rights Section, Civil Rights Division, U.S. Department of Justice.

(4) Affected public who will be asked to respond, as well as a brief abstract: Primary: Individuals alleging discrimination by public entities based on disability. Under title II of the Americans with Disabilities Act, an individual who believes that he or she has been subjected to discrimination on the basis of disability by public entity may, by himself or herself or by an authorized representative, file a complaint. Any Federal agency that receives a complaint of discrimination by a public entity is required to review the complaint to determine whether it has jurisdiction under section 504. If the agency does not have jurisdiction, it must determine whether it is the designated agency responsible for complaints filed against that public entity. If the agency does not have jurisdiction under section 504 and is not the designated agency, it must refer the complaint to the Department of Justice. The Department of Justice then must refer the complaint to the appropriate agency.

(5) An estimate of the total number of respondents and the amount of time estimated for an average respondent to respond: 5,000 respondents per year at 0.75 hours per complaint form.

(6) An estimate of the total public burden (in hours) associated with the collection: 3,750 hours annual burden.

If additional information is required contact: Mr. Robert B. Briggs, Clearance Officer, United States Department of Justice, Information Management and Security Staff, Justice Management Division, Suite 850, Washington Center, 1001 G Street, NW., Washington, DC 20530.

Dated: June 10, 1997.

Robert B. Briggs,

Department Clearance Officer.

[FR Doc. 97–15667 Filed 6–13–97; 8:45 am]

BILLING CODE 4410–13–M

DEPARTMENT OF JUSTICE

Disability Rights Section, Civil Rights Division Agency Information Collection Activities Under Review

ACTION: Notice of extension of currently approved information collection; nondiscrimination on the basis of disability in state and local government services (transition plan).

Purpose: The information collection extension is published to obtain comments from the public and affected agencies. Comments are encouraged and will be accepted until August 15, 1997.

We request written comments and suggestions from the public and affected agencies' concerning the extension of a currently approved collection of information. Your comments should address one or more of the following four points:

(1) Evaluate whether the collection of information is necessary for the proper performance of the function of the agency, including whether the information will have practical utility;

(2) Evaluate the accuracy of the agencies estimate of the burden of the collection of information;

(3) Enhance the quality, utility, and clarity of the information to be collected; and

(4) Minimize the burden of the collection of information on those who are to respond, including through the use of appropriate automated, electronic, mechanical, or other technological collection techniques or other forms of information technology (e.g., permitting electronic submission of responses).

Comments and/or suggestions regarding the item(s) contained in this notice, especially regarding the estimated public burden and associated response time should be directed to John Wodatch (phone number and address listed below). If you have additional comments, suggestions, or need a copy of the proposed information collection instrument with instructions, or additional information, contact John Wodatch, Chief, Disability Rights Section, Civil Rights Division, by calling

(800) 514–0301 (Voice) or (800) 514–0383 (TTY) (the Division's ADA Information Line), or write him at U.S. Department of Justice, P.O. Box 66738, Washington, DC 20035–6738.

The information collection is listed below:

(1) Type of information collection. Extension of Currently Approved Collection.

(2) The title of the form/collection. Nondiscrimination on the Basis of Disability in State and Local Government Services (Transition Plan).

(3) The agency form number and applicable component of the Department sponsoring the collection. None.

(4) Affected public who will be asked to respond, as well as a brief abstract: Primary: State, Local or Tribal Government. Under title II of the Americans with Disabilities Act, State and local governments are required to operate each service, program, or activity so that the service, program, or activity, when viewed in its entirety, is readily accessible to and usable by individuals with disabilities (''program accessibility''). If structural changes to existing facilities are necessary to accomplish program accessibility, a public entity that employs 50 or more persons must develop a ''transition plan'' setting forth the steps necessary to complete the structural changes. A copy of the transition plan must be made available for public inspection.

(5) An estimate of the total number of respondents and the amount of time estimated for an average respondent to respond: 6,000 respondents at 8 hours per transition plan.

(6) An estimate of the total public burden (in hours) associated with the collection: 48,000 hours annual burden.

If additional information is required contact: Mr. Robert B. Briggs, Clearance Officer, United States Department of Justice, Information Management and Security Staff, Justice Management Division, Suite 850, Washington Center, 1001 G Street, NW., Washington, DC 20530.

Dated: June 10, 1997.

Robert B. Briggs,

Department Clearance Officer.

[FR Doc. 97–15668 Filed 6–13–97; 8:45 am]

BILLING CODE 4410–13–M

DEPARTMENT OF JUSTICE

Federal Bureau of Identification

Criminal Justice Information Services Agency Information Collection Activities, Proposed Collection; Comment Request

ACTION: Notice of information collection under Review: Supplementary homicide report.

The proposed information collection is published to obtain comments from the public and affected agencies. Comments are encouraged and will be accepted until August 15, 1997.

Request written comments and suggestions from the public and affected agencies concerning the proposed collection of information. Your comments should address one or more of the following four points:

(1) Evaluate whether the proposed collection of information is necessary for the proper performance of the functions of the agency, including whether the information will have practical utility;

(2) Evaluate the accuracy of the agencies estimate of the burden of the proposed collection of information, including the validity of the methodology and assumptions used;

(3) Enhance the quality, utility and clarity of the information to be collected; and

(4) Minimize the burden of the collection of information on those who are to respond, including through the use of appropriate automated, electronic, mechanical, or other technological collection techniques or other forms of information technology, e.g., permitting electronic submission of responses.

Comments and/or suggestions regarding the item(s) contained in this notice, especially regarding the estimated public burden and associated response time should be direct to SSA Paul J. Gans (phone number and address listed below). If you have additional comments, suggestions, or need a copy of the proposed information collection instrument with instructions, or additional information, please contact SSA Paul J. Gans, 304–625–4830, FBI, CJIS, Statistical Unit, P.O. Box 4142, Clarksburg WV 26302–9921. Overview of this information collection:

(1) Type of information collection: Extension of Current Collection.

(2) The title of the form/collection: Supplementary Homicide Report [SHR].

(3) The agency form number, if any, and applicable component of the Department sponsoring the collection. Form: I–704. Federal Bureau of Identification, Department of Justice.

(4) Affected public who will be asked or required to respond, as well as brief abstract. Primary: State and Local Law Enforcement Agencies. This collection is needed to provide data regarding age, sex, race, victim/offender relationships, weapons and motives of murders committed throughout the United States. Data is tabulated and published in the annual ''CRIME in the United States.''

(5) An estimate of the total number of respondents and the amount of time estimated for an average respondent to respond: 64,791 responses; and with an average completion time of 9 minutes a month per response.

(6) An estimate of the total public burden (in hours) associated with this collection: 9,719 hours annually.

If additional information is required contact: Mr. Robert B. Briggs, Clearance Officer, United States Department of Justice, Information Management and Security Staff, Justice Management Division, Suite 850, Washington Center, 1001 G Street, NW., Washington, DC 20530.

Dated: June 11, 1997.

Robert B. Briggs,

Department Clearance Officer, United States Department of Justice.

[FR Doc. 97–15719 Filed 6–13–97; 8:45 am]

BILLING CODE 4410–02–M

DEPARTMENT OF JUSTICE

Drug Enforcement Administration

Agency Information Collection Activities: New Collection; Comment Request

ACTION: Notice of information collection under review; Collection of laboratory analysis data on drug samples tested by non-Federal (state and local government) crime laboratories.

Office of Management and Budget approval is being sought for the information collection listed below. This proposed information collection was previously published in the **Federal Register** on March 14, 1997 at 62 FR 12250, allowing for a 60-day public comment period.

The purpose of this notice is to allow an additional 30 days for public comments until July 16, 1997. This process is conducted in accordance with 5 CFR 1320.10.

Written comments and/or suggestions regarding the item(s) contained in this notice, especially regarding the estimated public burden and associated

response time should be directed to the Office of Management and Budget, Office of Regulatory Affairs, Attention: Department of Justice Desk Office, Washington DC 20530. Additionally, comments may be submitted to OMB via facsimile to (202) 395–7285. Comments may also be submitted to the Department of Justice (DOJ), Justice Management Division, Information Management and Security Staff, Attention: Department Clearance Officer, Suite 850, Washington Center, 1001 G Street, NW., Washington, DC 20530. Additionally, comments may be submitted to DOJ via facsimile at (202) 514–1590.

Written comments and suggestions from the public and affected agencies concerning the proposed collection of information should address one or more of the following four points:

1. Evaluate whether the proposed collection of information is necessary for the proper performance of the functions of the agency, including whether the information will have practical utility;

2. Evaluate the accuracy of the agencies estimate of the burden of the proposed collection of information, including the validity of the methodology and assumptions used;

3. Enhance the quality, utility, and clarity of the information to be collected; and

4. Minimize the burden of the collection of information on those who are to respond, including through the use of appropriate automated, electronic, mechanical, or other technological collection techniques or other forms of information technology, e.g., permitting electronic submission of responses.

Overview of this information collection:

1. *Type of Information Collection:* New Collection.

2. *Title of the Form/Collection:* Collection of laboratory analysis data on drug samples tested by non-Federal (state and local government) crime laboratories also known as National Forensic Laboratory Information System (NFLIS);

3. *Agency form number:* None; Applicable component of the Department of Justice sponsoring the collection: Office of Diversion Control, Drug Enforcement Administration, Department of Justice.

4. *Affected public who will be asked to respond, as well as a brief abstract:* Primary: State and local crime laboratories. *Other:* None.

DEA is required under the Controlled Substances Act (CSA) (21 U.S.C. 811(b)) to gather data relevant to a determination of the actual or relative abuse potential of drugs. Existing Federal drug abuse data bases do not provide the type or quality of information necessary to accomplish this task in a timely and efficient manner. Non-Federal crime laboratories conduct chemical analyses on a significantly larger number of illicit drug samples than DEA's seven laboratories. The non-Federal analyzed drug data is an untapped resource which would give DEA a very comprehensive representation of drug trafficking in the U.S. This data has the highest degree of validity because it is verified by chemical analysis. Participating laboratories and other government agencies will be permitted to access part of the data base.

5. *An estimate of the total number of respondents and the amount of time estimated for an average respondent to respond:* 330 respondents at 12 times per year at 8 hours per response.

6. *An estimate of the total public burden (in hours) associated with the collection:* 31,680 annual burden hours.

If additional information is required contact: Mr. Robert B. Briggs, Clearance Officer, United States Department of Justice, Information Management and Security Staff, Justice Management Division, Suite 850, Washington Center, 1001 G Street, NW., Washington, DC 20530.

Dated: June 10, 1997.

Robert B. Briggs,

Department Clearance Officer, United States Department of Justice.

[FR Doc. 97–15678 Filed 6–13–97; 8:45 am]

BILLING CODE 4410–09–M

DEPARTMENT OF JUSTICE

Drug Enforcement Administration

Agency Information Collection Activities; Extension of Existing Collection; Comment Request

ACTION: Notice of information collection under review; annual reporting requirement for manufacturers of listed chemicals.

Office of Management and Budget approval is being sought for the information collection listed below. This information collection was previously published in the **Federal Register** on March 31, 1997, and allowed for a 60 day comment period. The purpose of this notice is to allow an additional 30 days for public comments until July 16, 1997. This process is conducted in accordance with 5 CFR 1320.10.

Written comments and/or suggestions regarding the item(s) contained in this notice, especially regarding the estimated public burden and associated response time, should be directed to the Office of Management and Budget, Office of Regulatory Affairs, Attention: Department of Justice Desk Office, Washington, DC 20530. Additionally, comments may be submitted to OMB via facsimile to (202) 395–7285. Comments may also be submitted to the Department of Justice (DOJ), Justice Management Division, Information Management and Security Staff, Attention: Department Clearance Officer, Suite 850, 1001 G Street, NW., Washington, DC 20530. Additionally, comments may be submitted to DOJ via facsimile to (202) 514–1590.

Written comments and suggestions from the public and affected agencies concerning the proposed collection of information should address one or more of the following four points:

1. Evaluate whether the proposed collection of information is necessary for the proper performance of the functions of the agency, including whether the information will have practical utility;

2. Evaluate the accuracy of the agencies estimate of the burden of the proposed collection of information, including the validity of the methodology and assumptions used;

3. Enhance the quality, utility, and clarity of the information to be collected; and

4. Minimize the burden of the collection of information on those who are to respond, including through the use of appropriate automated, electronic, mechanical, or other technological collection techniques or other forms of information technology, e.g., permitting electronic submission of responses.

Overview of the information collection:

1. *Type of Information Collection:* Extension of a currently approved collection.

2. *Title of the Form/Collection:* Annual Reporting Requirement for Manufacturers of Listed Chemicals.

3. *Agency form number:* None, if any, and the applicable component of the *Department of Justice sponsoring the collection:* Office of Diversion Control, Drug Enforcement Administration, Department of Justice.

4. *Affected public who will be asked or required to respond, as well as a brief abstract: Primary:* Business or other for-profit. Other: None. Section 310(b) of the Controlled Substances Act (21 U.S.C. 830(b)) was amended by Public Law 103–200 (The Domestic Chemical

Diversion Control Act of 1993 (DCDCA)) to add a requirement that ''A regulated person that manufactures a listed chemical shall report annually to the Attorney General, in such form and manner and containing such specific data as the Attorney General shall prescribe by regulation, information concerning listed chemicals manufactured by the person.''

5. *An estimate of the total number of respondents and the amount of time estimated for an average respondent to respond:* 100 respondents at 1 response per year at 4 hours per response.

6. *An estimate of the total public burden (in hours) associated with the collection:* 400 annual burden hours.

Public comment on this proposed information collection is strongly encouraged.

Dated: July 11, 1997.

Robert B. Briggs,

Department Clearance Officer, United States Department of Justice.

[FR Doc. 97–15720 Filed 6–13–97; 8:45 am]

BILLING CODE 4410–18–M

DEPARTMENT OF JUSTICE

Drug Enforcement Administration

Craig K. Alhanati, D.D.S. Revocation of Registration

On June 25, 1996, the Deputy Assistant Administrator, Office of Diversion Control, Drug Enforcement Administration (DEA), issued an Order to Show Cause to Craig K. Alhanati, D.D.S., of California, notifying him of an opportunity to show cause as to why DEA should not revoke his DEA Certificate of Registration, AA2387721, under 21 U.S.C. 824(a)(3), and deny any pending applications for registration pursuant to 21 U.S.C. 823(f), for reason that he is not currently authorized to handle controlled substances in the State of California.

The Order to Show Cause was not served on Dr. Alhanati until sometime in December 1996. By letter dated December 21, 1996, Dr. Alhanati responded to the Order to Show Cause. In his response, Dr. Alhanati did not request a hearing, but instead set forth his position on the issues raised by the Order to Show Cause. Therefore, the Acting Deputy Administrator, finding that Dr. Alhanati has waived his right to a hearing, hereby enters his final order without a hearing and based upon the investigative file and Dr. Alhanati's letter dated December 21, 1996, pursuant to 21 CFR 1301.43 (c) and (e) and 1301.46.

The Acting Deputy Administrator finds that by a decision dated April 17, 1994, the Board of Dental Examiners for the State of California revoked Dr. Alhanati's license to practice medicine based upon a finding that he committed a lewd act upon a child. The Acting Deputy Administrator finds that in light of the fact that Dr. Alhanati is not currently licensed to practice dentistry in the State of California, it is reasonable to infer that he is not currently authorized to handle controlled substances in that state.

The DEA does not have statutory authority under the Controlled Substances Act to issue or maintain a registration if the applicant or registrant is without state authority to handle controlled substances in the state in which he conducts his business. 21 U.S.C. 802(21), 823(f) and 824(a)(3). This prerequisite has been consistently upheld. See *Romeo J. Perez, M.D.,* 62 FR 16,193 (1997); *Demetris A. Green, M.D.,* 61 FR 60,728 (1996); *Dominick A. Ricci, M.D.,* 58 FR 51,104 (1993).

Here it is clear that Dr. Alhanati is not currently authorized to handle controlled substances in the State of California. Therefore, Dr. Alhanati is not entitled to a DEA registration in that state.

In his letter dated December 21, 1996, Dr. Alhanati admitted that he was not currently authorized to practice dentistry in California, but stated that he was licensed ''in the state of Illinois, among other states.'' He further contended that ''to revoke my DEA Certificate of Registration might forever preclude me from prescribing analgesics requisite following treatment of my patients following surgery.'' Dr. Alhanati argued that his state license was erroneously revoked because he ''was non-culpable of the allegation,'' and that the reason that it was revoked was non-drug related. Finally, Dr. Alhanati indicated that he was seeking relicensure with the State of California.

The Acting Deputy Administrator concludes that the fact that Dr. Alhanati is licensed to practice dentistry in states other than California is irrelevant since he is not authorized to practice in the state where he is registered with DEA and he has not sought to modify his current registration to another state. The Acting Deputy Administrator notes that revocation of Dr. Alhanati's DEA Certificate of Registration will not forever preclude him from prescribing controlled substances. Dr. Alhanati is certainly free to apply for a new DEA registration in a state where he is authorized to practice dentistry and handle controlled substances or to reapply for a DEA registration in California, if he is relicensed in that state. The fact that Dr. Alhanati is seeking relicensure in California is not persuasive. There is no evidence in the record that he has been granted a new license to practice dentistry in California, and therefore the Acting Deputy Administrator concludes that Dr. Alhanati is not currently authorized to practice or handle controlled substances in that state, Finally, Dr. Alhanati's arguments that his state revocation was erroneous and not drug-related are immaterial. No matter what the basis was for the state action, the fact remains that he is not currently authorized to practice and handle controlled substances in California.

Accordingly, the Acting Deputy Administrator of the Drug Enforcement Administration, pursuant to the authority vested in him by 21 U.S.C. 823 and 824 and 28 CFR 0.100(b) and 0.104, hereby orders that DEA Certificate of Registration AA2387721, previously issued to Craig K. Alhanati, D.D.S., be, and it hereby is, revoked. The Acting Deputy Administrator further orders that any pending applications for the renewal of such registration, be, and they hereby are, denied. This order is effective July 16, 1997.

Dated: June 9, 1997.

James S. Milford,

Acting Deputy Administrator.

[FR Doc. 97–15640 Filed 6–13–97; 8:45 am]

BILLING CODE 4410–09–M

DEPARTMENT OF JUSTICE

Drug Enforcement Administration

[Docket No. 95–43]

Dennis Robert Howard, M.D. Grant of Restricted Registration

On May 24, 1995, the Deputy Assistant Administrator, Office of Diversion Control, Drug Enforcement Administration (DEA), issued an Order to Show Cause to Dennis Robert Howard, M.D., (Respondent) of Macon, Georgia, notifying him of an opportunity to show cause as to why DEA should not deny his applications for registration as a practitioner under 21 U.S.C. 823(f), for reason that such registration would be inconsistent with the public interest.

By letter dated June 21, 1995, Respondent, through counsel, timely filed a request for a hearing, and following prehearing procedures, a hearing was held in Atlanta, Georgia on April 23 and 24, 1996, before Administrative Law Judge Mary Ellen Bittner. At the hearing, both parties

called witnesses to testify and introduce documentary evidence. After the hearing, both sides submitted proposed findings of fact, conclusions of law and argument and reply briefs. On February 28, 1997, Judge Bittner issued her Opinion and Recommended Ruling, Findings of Fact, Conclusions of Law and Decision, recommending that Respondent be granted a DEA Certificate of Registration subject to several restrictions that would remain in effect for three years from the issuance of the registration. On March 20, 1997, Government counsel filed exceptions to the Recommended Ruling of the Administrative Law Judge, and on April 7, 1997, Judge Bittner transmitted the record of these proceedings to the Acting Deputy Administrator.

The Acting Deputy Administrator has considered the record in its entirety, and pursuant to 21 CFR 1316.67, hereby issues his final order based upon findings of fact and conclusions of law as hereinafter set forth. The Acting Deputy Administrator adopts, except as specifically noted, the findings of fact, conclusions of law, and recommended ruling of the Administrative Law Judge. His adoption is in no manner diminished by any recitation of facts, issues and conclusions herein, or of any failure to mention a matter of fact or law.

The Acting Deputy Administrator finds that Respondent received his Doctor of Medicine degree from the University of Wisconsin in 1962. In 1983, he moved to Georgia and became licensed to practice medicine in that state. He was served on the faculty of several universities and is board-certified in family medicine. In addition, he has held offices in various professional organizations, has served on numerous boards, and has published several articles and portions of books. Respondent testified that he treats many patients for chronic pain.

In November 1992, an agent for the Georgia Secretary of State, in conjunction with DEA and the Georgia Drugs and Narcotics Agency, investigated Respondent's prescribing practices. The investigation included surveying prescriptions at local pharmacies, subpoenaing medical records, and interviewing Respondent. The results of the investigation were submitted to the Georgia Composite State Board of Medical Examiners (Board), which then met on Novebmer 4 and 5, 1992, and unanimously voted to ''issue an Emergency Suspension of [Respondent's] DEA permit and cite for a Formal Hearing.'' It was not until May 10, 1993, that the Board issued an Order of Summary Suspension of Privileges for the Prescribing of Controlled Substances and a Notice of Hearing. The Order specifically charged that ''Respondent has prescribed controlled substances in such a manner as to constitute unprofessional conduct departing from or failing to conform to the minimal standards of acceptable and prevailing medical practice and prescribing for other than legitimate medical purpose. * * *'' The Board ordered the Respondent surrender his DEA registration within 48 hours of service of the Order.

On May 11, 1993, state agents went to Respondent's office to serve the Board's Order. Initially, Respondent was not present, but came to the office at the agents' request. One of the agents at the hearing testified that when Respondent arrived at the office, he appeared to be under the influence of some type of substance. Respondent testified however that he was not under the influence of anything, but instead was in shock over the Board's actions. An insurance biller who worked with Respondent and was present on May 11th, testified that respondent did not appear intoxicated or under the influence when she saw him at the office that day.

Respondent indicated to the agents that he ordered drugs from a wholesaler and then dispensed them to his patients so cost, rather than issuing them prescriptions. He further stated that he had used various controlled substances over the years and had smoke marijuana as recently as three days before the interview, and that his marijuana use was limited to three to four times a month. At the hearing in this matter, Respondent testified that he took aspirin with codeine (Empirin No. 4) twice a day for an ''irritable bowel problem'', and three or four diazepam tablets a week for leg muscle spasm, and that both of these drugs were originally prescribed for him by a physician. Respondent also testified that he had self-prescribed hydrocodone with APAP one to three times a week when he had back pain, and that he took other non-controlled drugs for his back problems and his plood pressure. Respondent further testified that he has not used marijuana since 1993, he has only taken medications that were prescribed for him by his physician.

Following service of the Board's Order, on May 12, 1993, the Medical Coordinator for the Board advised Respondent that he must undergo a 96 hour in-patient medical and psychological evaluation. Thereafter, Respondent checked into an Atlanta hospital, and May 14, 1993, DEA personnel went to the hospital and requested that Respondent surrender his DEA registration. Respondent signed the surrender of registration form, but testified that the surrender was not truly voluntary, since he felt pressured to sign because he was told that ''it would show my good faith in cooperating with this investigation and that it would make it easier for me to get my DEA certification back once I was cleared of the charges.''

On May 17, 1993, the Board issued an Order of Summary Suspension of Medical License stating that it ''has received reliable information that Respondent is unable to practice medicine with reasonable skill and safety'' as a result of his admitted use of marijuana, diazepam, aspirin with codeine and hydrocodone. At the hearing in this matter, Respondent testified that during the summer of 1993, he was evaluated by a psychiatrist and a family practitioner to determine whether or not he was addicted or impaired. Both doctors found that Respondent was fit to practice medicine.

A hearing began on August 9, 1993, regarding the Board's charges against Respondent for the misprescribing of controlled substances. During the hearing, it was discovered that Board personnel had provided its expert witness with incomplete copies of Respondent's patient records. Subsequently, the Board's counsel agreed not to advise the expert, prior to his testimony, that the records were incomplete. However, the Hearing Officer found that the Board's counsel did not adhere to this agreement and therefore, the Hearing Officer dismissed the Notice of Hearing, noting that ''submission of incomplete records to the medical expert was patently unfair * * *.''

On August 10, 1993, the Superior Court of Fulton County ordered the reinstatement of Respondent's license to practice medicine, finding that the Board had not provided Respondent with a prompt hearing on the charges which led to the suspension. Thereafter, on September 10, 1993, the court ordered that Respondent's license to practice medicine remain in effect until a final determination was made on his alleged impairment Respondent testified that eventually the charges of misprescribing were ''dropped'' by the Board.

On August 16, 1993, Respondent filed his first application for a CEA Certificate of Registration that is the subject of these proceedings. He affirmatively answered question 4(b) on the application which asks if the applicant has ''ever been convicted of a crime in connection with controlled substances

* * * or ever surrendered or had a Federal controlled substance registration revoked, suspended, restricted or denied, or ever had a State professional license or controlled substance registration revoked, suspended, denied, restricted or placed on probation?'' In explaining his answer, Respondent indicated that he had ''voluntarily surrendered my controlled substances privileges on May 14, 1993 while cooperating with an investigation * * *.'' Respondent did not mention the Board's summary suspension orders.

Respondent testified that in the midst of the hearing in the fall of 1993 regarding the allegations of his impairment, the Board entered into settlement negotiations with Respondent. On January 6, 1994, Respondent and the Board entered into a consent order reinstating his license to practice medicine and his authority to prescribe controlled substances. The consent order did not state that Respondent had committed any offenses, which according to the testimony of an attorney who had represented the Board and had served as a hearing officer for the Board is unusual for a consent order because it did not contain an ''admission of any kind of allegations.'' The order directed that for five years, Respondent would (1) ''Attend and successfully complete the mini-residency'' on proper prescribing practices of controlled substances within six months of the order; (2) allow the Medical Coordinator to review and inspect his medical records; (3) ''abstain from the consumption of all mood altering substances except as prescribed by a duly licensed practitioner (other than Respondent) for a legitimate medical purpose''; (4) allow the Board to order him to submit to random urine, blood, fluid or hair analysis and/or a mental or physical evaluation; (5) comply with diagnosis, treatment and record keeping rules; (6) report any malpractice suits against him; (7) supply a copy of the Consent Order to any person he was associated with in practice; (8) not use a physician's assistant to perform any of the restricted tasks; (9) notify the Medical Board if he leaves the state for more than thirty days for the purpose practicing medicine; (10) abide by all State and Federal laws regulating the practice of medicine; and, (11) be evaluated by the Medical Board regarding his compliance with the Order sixty days prior to its expiration.

On June 17, 1994, Respondent submitted a second application for a DEA registration. He again affirmatively answered question 4(b), with the following explanation: ''On May 14, 1993, I signed a Voluntary Surrender for my previous DEA certification to cooperate with and facilitate an investigation by the State of Georgia Composite Board of Medical Examines into allegations of misprescribing. My licence [sic] was reinstated on August 10, 1993, and all charges were subsequently dropped * * *.'' Respondent testified that he did not mention the consent order with the Board, because he did not believe that the term ''probation'' in question 4(b) applied to the consent order. The consent order does not specifically state that Respondent's license was placed on probation. The former Board attorney and hearing officer testified that if the Board had intended to impose probation on Respondent, it would have set ''it forth right at the beginning of the order, you know, that a Respondent is placed on probation upon the following terms and conditions * * *.''

On July 14, 1994, Respondent received DEA order forms for the ordering of Schedule I and II controlled substances. These forms were imprinted with a new DEA registration number. Respondent testified that he believed that order forms could not be issued except to holders of a valid registration number, and therefore he believed that his application had been approved. When approximately a week had passed and he had not received his Certificate of Registration, Respondent telephone a DEA supervisory registration specialist on July 22, 1994, and was told that the order forms had been issued in error, that his DEA registration was not valid, and that he should return the order forms. Respondent testified that he was told ''on the phone that it was not good, but I figured if they had issued it, then there was a more proper way that they could withdraw it.''

Respondent then telephoned a member of Senator Sam Nunn's staff, asking for assistance in determining the validity of his DEA registration. Respondent had been working with this staff member for a number of months in trying to obtain a decision regarding his application for DEA registration. The staff member contacted DEA on July 25, 1994, and was told that Respondent did not possess a valid DEA registration. The staff member then left a message for Respondent on his answering machine on the evening of July 25th, but did not actually speak with Respondent until the following morning. Respondent testified that he had been hospitalized and was discharged on the 25th, but did not go into his office where his answering machine was located until the following day, and therefore did not get the message from the staff member until July 26th.

A local pharmacist indicated to DEA that Respondent had telephoned in a prescription for an individual for Tylenol with codeine No. 3 on July 26, 1994, using the DEA number that was listed on the order forms. Respondent and the individual testified that the individual had been Respondent's patient from 1989 until 1992, when Respondent moved out of town. Both testified that the individual had back problems, and that she was under the care of a physician who was out of town when she began experiencing back pain. They testified that she called Respondent in the evening on July 25, 1994, requesting a prescription. Respondent called the prescription in to a local pharmacy, but when a co-worker went to pick up the medication, the pharmacist refused to fill the prescription until the pharmacist could verify Respondent's DEA registration number. The individual called Respondent later that evening and Respondent offered to write a prescription for Tylenol with codeine No. 3 for the individual that she could pick up the following day at office.

Respondent testified that at the time that he wrote the prescription for the individual on the morning of July 26, 1994, he had not yet listened to the message from Senator Nunn's staff member, stating that his DEA registration was invalid. Respondent testified that after talking with the staff member later in the morning on July 26th, he ceased writing any controlled substance prescriptions.

The Government argues that Respondent's registration would be inconsistent with the public interest because he twice issued a prescription for a controlled substance to an individual even though he knew that his DEA number was invalid; he used marijuana; he repeatedly self-prescribed controlled substances; his medical license is currently subject to the terms of a consent order; and he was less than truthful in his explanation of his answers to question 4(b) on his applications for registration. Respondent argues that his application should not be denied because when he received the DEA order forms, he believed that he had been issued a valid DEA registration number; that although a DEA employee told him that the forms had been issued in error, he did not believe the registration number was invalid until the Senator's staff member instructed him not to use the number; and that he self-prescribed controlled substances only for a legitimate medical purpose, and now only takes medication

that is prescribed for him by his physician. Respondent admits that his use of marijuana was illegal, but asserts that he stopped using it in May 1993.

Pursuant to 21 U.S.C. § 823(f), the Deputy Administrator may deny an application for a DEA Certificate of Registration if he determines that such registration would be inconsistent with the public interest. In determining the public interest, the following factors are considered:

(1) The recommendation of the appropriate State licensing board or professional disciplinary authority.

(2) The applicant's experience in dispensing, or conducting research with respect to controlled substances.

(3) The applicant's conviction record under Federal or State laws relating to the manufacture, distribution, or dispensing of controlled substances.

(4) Compliance with applicable State, Federal, or local laws relating to controlled substances.

(5) Such other conduct which may threaten the public health and safety. These factors are to be considered in the disjunctive; the Deputy Administrator may rely on any one or a combination of factors and may give each factor the weight he deems appropriate in determining whether a registration should be revoked or an application for registration be denied. *See* Henry J. Schwarz, Jr., M.D., Docket No. 88–42, 54 FR 16,422 (1989).

Regarding factor one, it is undisputed that on May 10, 1993, the Board summarily suspended Respondent's privileges for prescribing controlled substances based upon allegations of misprescribing, and on May 17, 1993, summarily suspended Respondent's license to practice medicine based upon allegations of impairment. However, it is also undisputed that ultimately there were no findings made by the Board or admissions made by Respondent regarding these allegations. Respondent did enter into a consent order with the Board on January 7, 1994. While the consent order imposed certain requirements on Respondent, for the most part, it merely restated powers that the Board already has by virtue of its laws and regulations that apply to all physicians.

As to factors two and four, it is undisputed that Respondent issued two prescriptions for Tylenol with codeine No. 3 while not registered with DEA. The Government argues that Respondent had been verbally informed by a DEA registration specialist several days before he issued the prescriptions that he did not possess a valid registration. Respondent argues that he thought that he was registered when he issued the prescriptions because he had received DEA official order forms indicating a new registration number, and that although he had been orally advised by the registration specialist that his number was not valid, he received no written notification to that effect.

Judge Bittner concluded that ''it would have been more prudent for Respondent to verify his status before issuing any controlled substance prescriptions. However, the agency's failure to notify Respondent in writing that he did not have a valid DEA registration contributed to the misunderstanding, and under these circumstances I cannot say that a preponderance of the evidence establishes that Respondent did not act in good faith in issuing these prescriptions.'' In her opinion, Judge Bittner did not find that Respondent violated provisions of the Controlled Substances Act by issuing controlled substance prescriptions without a valid DEA registration. The Government filed exceptions to Judge Bittner's conclusion arguing that there is no ''good faith '' exemption from liability in administrative proceedings. The Acting Deputy Administrator agrees with the Government. The Controlled Substances Act and its implementing regulations require that a physician possess a valid DEA registration in order to legally prescribe controlled substances. *See, 21 U.S.C. 822(a), and 21 CFR 1301.31(a) and 1306.03(a)(2).* Respondent was not exempt from this requirement when he issued the two prescriptions for Tylenol with codeine No. 3 on July 25 and 26, 1994. However, as DEA has previously held, if Respondent issued these prescriptions with the good faith belief that he was properly registered with DEA, that certainly is a mitigating factor in determining the public interest. *See, Stanley Alan Azen, M.D., FR 57,893 (1996).*

Next the Government argues in its exceptions that ''to the extent any purported 'good faith' on the part of Respondent might be considered as a mitigating factor in this proceeding, the Government takes exception to the Administrative Law Judge's funding that a preponderance of the evidence did not establish a lack of good faith on the part of the Respondent in issuing the two prescriptions.'' The Government argues that Respondent knew that he did not have a valid DEA registration when he issued the prescriptions. The Acting Deputy Administrator concludes that Respondent's belief that he was validly registered with DEA when he issued the prescriptions is not unreasonable. Respondent received DEA official order forms that indicated a new DEA registration. While as a result of his inquiry, he was verbally told by a DEA registration specialist that he did not possess a valid registration, he never received anything in writing from DEA notifying him of this fact, and he had no idea whether the individual he spoke to was in a position to declare a registration invalid. Like Judge Bittner, the Acting Deputy Administrator notes that it probably would have been more prudent for Respondent to not issue any prescriptions until he received clarification from Senator Nunn's staff member. However, upon learning from the staff member that he was not properly registered, Respondent ceased issuing controlled substance prescriptions.

The Acting Deputy Administrator concludes that while Respondent issued two controlled substance prescriptions when he was not authorized to do so, this is not so egregious as to warrant the denial of his application for registration. The prescriptions were issued to a former patient who suffered from back pain and whose regular physician was out of town. In addition, Respondent possessed a good faith belief that he was in fact properly registered with DEA.

As to Respondent's other experience in dispensing controlled substances and compliance with applicable laws and regulations, Respondent admitted that he self-prescribed various controlled substances which is a violation of the Board's rules and regulations. Respondent admitted that he self-prescribed hydrocodone with APAP for back pain. He also admitted to taking aspirin with codeine for an irritable bowel and diazepam for leg spasms, but that these drugs were originally prescribed for him by his physician. Judge Bittner found that while Respondent's self-prescribing was in violation of state rules and regulations, Respondent ceased this practice over three years before the hearing in this matter, there is no evidence that he is likely to resume the practice, and there is no evidence contrary to Respondent's testimony that he now only takes medications prescribed to him by another physician.

The Government argued in its exceptions that Respondent in fact violated state rules and regulations by self-prescribing controlled substances; that the fact that he has not self-prescribed in over three years ''should be considered only in the context of a mitigating factor''; and that the Administrative Law Judge failed to consider that Respondent ceased self-prescribing only after his state medical license and controlled substance

privileges were summarily suspended and he had surrendered his previous DEA registration. The Acting Deputy Administrator concludes that Respondent violated state rules and regulations by self-prescribing controlled substances. The Acting Deputy Administrator notes that it is quite possible that the only reason that Respondent has ceased self-prescribing is because he does not have the authority to prescribe controlled substances. However, with proper restrictions placed on his registration, the Acting Deputy Administrator agrees with Judge Bittner that such conduct is not likely to recur. At least two of the drugs that Respondent had self-prescribed were originally prescribed by another physician. There is no evidence in the record that any of the drugs were taken for other than a legitimate medical purpose. Also, there is no evidence that Respondent has since taken any medication that was not prescribed for him by another physician. Finally, two physicians independently evaluated Respondent and determined that he was not impaired.

The Acting Deputy Administrator also concludes that Respondent's admitted use of marijuana violated both state and Federal law. As the Government noted, Respondent's use of marijuana was not restricted to a one-time activity. In May 1993, Respondent admitted to smoking marijuana three to four times a month. The Acting Deputy Administrator is extremely troubled by his behavior. However, Respondent testified that he has not smoked marijuana since May 1993, and there is no evidence in the record to the contrary.

Regarding factor three, Respondent has not been convicted of any violations of Federal or state laws relating to the manufacture, distribution or dispensing of controlled substances.

As to factor five, the Government argues that Respondent has been misleading, or at least less than candid, by failing to completely explain his affirmative response to question 4(b) on his applications. He failed to state that his state medical license and controlled substance privileges had been suspended or that he was subject to a consent order. Like Judge Bittner, the acting Deputy Administrator finds Respondent's incomplete explanation troubling. In responding to the questions on an application, truthful answers and complete disclosure are necessary for DEA to be able to adequately evaluate whether it is in the public interest to issue a registration. However, given the circumstances in this case, Respondent's failure to provide a complete explanation on the applications does not warrant denial of the applications. Respondent did in fact answer the question affirmatively, and DEA was well aware of the state suspensions since that was the basis for seeking Respondent's voluntary surrender of his DEA registration. In addition, it is understandable that Respondent did not believe that the consent order placed him on probation within the meaning of the phrase in the application. An earlier draft of the consent order included probationary language but the final version did not contain such language. The former Board attorney and hearing officer testified that if the Board intended to place Respondent on probation, the consent order would have specifically so stated.

The Administrative Law Judge concluded that the Government had not met its burden of proving by a preponderance of the evidence that Respondent's registration would be inconsistent with the public interest. Nonetheless, Judge Bittner stated that she is ''troubled by Respondent's attitude towards regulation and [has] some question as to whether he appreciates the responsibility that accompanies a DEA registration.'' Accordingly, Judge Bittner recommended that Respondent's application be granted subject to the following restrictions to remain in effect for three years after Respondent's Certificate of Registration is issued:

(1) Respondent must agree to periodic inspections of his records based on a Notice of Inspection rather than an Administrative Inspection Warrant.

(2) Respondent is prohibited from self-administering or self-prescribing controlled substances under any circumstances.

(3) Respondent shall maintain a log of all controlled substance prescriptions that he issues and shall send the log quarterly to the local DEA Special Agent in Charge or his or her designee.

(4) Respondent shall not maintain any controlled substances in his office.

The Government filed exceptions to Judge Bittner's recommended ruling arguing that the Government established, at the very least, a prima facie case under 21 U.S.C. 823(f)(2), (4) and (5), and that the record as a whole supports the denial of Respondent's applications for registration as inconsistent with the public interest. The Acting Deputy Administrator agrees with the Government that it established a prima facie case for denial of Respondent's applications. Respondent issued prescriptions for controlled substances while not properly registered with DEA. He self-prescribed controlled substances in violation of state rules and regulations. Up until May 1993, he smoked marijuana three to four times a month. He is currently subject to a consent order with the Board. Finally, he did not give complete explanations on his applications for registration.

However, the Acting Deputy Administrator concludes that in light of the previously discussed mitigating circumstances present in this case, denial of Respondent's applications is not warranted. The Acting Deputy Administrator agrees with Judge Bittner that some restrictions on Respondent's registration are appropriate in light of Respondent's previous violations of Federal and state laws and regulations relating to controlled substances. Therefore,the Acting Deputy Administrator concludes that Respondent should be granted a DEA Certificate of Registration subject to the following conditions for three years from the date of issuance of the registration:

(1) Respondent must agree to periodic inspections by DEA personnel based on a Notice of Inspection rather than an Administrative Inspection Warrant.

(2) Respondent shall not dispense or prescribe controlled substances to himself, and shall only administer to himself those controlled substances legitimately dispensed or prescribed to him by another duly authorized practitioner.

(3) Respondent shall not order or maintain any controlled substances for his practice. He shall only prescribe controlled substances and shall not administer or dispense any controlled substances.

(4) Respondent shall maintain a log of all controlled substances that he prescribes, and shall send the log quarterly to the Special Agent in Charge of the nearest DEA office or his designee. The log shall include, the name of the patient, the date that the controlled substance was prescribed, and the name, dosage and quantity of the controlled substance prescribed. If no controlled substances are prescribed during a given quarter, Respondent shall indicate that fact in writing, in lieu of submission of the log.

Accordingly, the Acting Deputy Administrator of the Drug Enforcement Administration, pursuant to the authority vested in him by 21 U.S.C. 823 and 824, and 28 CFR 0.100(b) and 0.104, hereby orders that the application for a DEA Certificate of Registration submitted by Dennis Robert Howard, M.D., be, and it hereby is granted, subject to the above described restrictions. This order is effective July 16, 1997.

Dated: June 5, 1997.

James S. Milford,

Acting Deputy Administrator.

[FR Doc. 97–15641 Filed 6–13–97; 8:45 am]

BILLING CODE 4410–09–M

DEPARTMENT OF JUSTICE

Drug Enforcement Administration

Importation of Controlled Substances Application for Radian International LLC; Notice of Correction

In the **Federal Register** (FR Doc. 97–13088) appearing on page 27281 in the issue of Monday, May 19, 1997, the third paragraph should read: ''The firm plans to import small quantities of the listed controlled substances for the manufacture of analytical reference standards.''

Dated: June 3, 1997.

John H. King,

Deputy Assistant Administrator, Office of Diversion Control, Drug Enforcement Administration.

[FR Doc. 97–15642 Filed 6–13–97; 8:45 am]

BILLING CODE 4410–09–M

MERIT SYSTEMS PROTECTION BOARD

Opportunity to File Amicus Briefs in Fitzgerald et al. versus Department of Defense, MSPB Docket No. PH–0842–94–0200–B–1

AGENCY: Merit Systems Protection Board.

ACTION: The Merit Systems Protection Board is providing interested parties with an opportunity to submit amicus briefs on the following issues: (1) Whether the Board has jurisdiction over an appeal from a final agency decision denying an employee law enforcement officer (LEO) retirement coverage where the employee made no request for such coverage in accordance with 5 CFR 842.807(a); and (2) whether 5 CFR 842.804(c), which creates a rebuttable presumption that an agency head's denial of LEO retirement coverage is correct where a formal, written request is not filed within six months after entering a position or after any significant change in the position, is invalid, unreasonable, or violates due process.

SUMMARY:

Issue 1

In these consolidated appeals, the appellants, who are covered by the Federal Employees' Retirement System (FERS), 5 U.S.C. chapter 84, did not request a determination of their LEO status. Rather, the agency issued a final decision on its own initiative finding that the appellants' positions were not covered by the special retirement provisions of FERS, and providing the appellants with notice of a right to appeal to the Board.

Under 5 CFR 842.807(a), ''[t]he final decision of an agency denying an individual's request for approval of a position as a rigorous, secondary, or air traffic controller position made under 5 CFR 842.804(c) may be appealed to the * * * Board under procedures prescribed by the Board.'' In adopting this regulation, the Office of Personnel Management (OPM) indicated that it was amending the section ''to clarify that * * * only agency denial decisions made in response to individual requests under § 842.804(c) are subject to appeal * * *.'' 57 FR 32,685, 32,689 (July 23, 1992).

The Board has generally interpreted section 842.807(a) as requiring that an employee who is covered by FERS first formally request a determination on LEO coverage from his or her agency before appealing the agency's LEO determination to the Board. *See, e.g., Fitzgerald* versus *Department of Defense*, 70 M.S.P.R. 152, 155 (1996). The Board, however, is reconsidering this interpretation where, as in these cases, the agency has already issued a final decision on its own initiative. In this regard, the Board notes that under 5 U.S.C. 8461(e)(1), an administrative action or order affecting the rights or interests of an individual under the provisions of chapter 84 administered by OPM may be appealed to the Board.

The Board is inviting interested parties to submit amicus briefs addressing whether an employee request is a jurisdictional requirement where the agency has issued a final decision on its own initiative.

Issue 2

The Board has interpreted 5 CFR 842.804(c) as an additional restriction on its jurisdiction over FERS LEO matters. *See, e.g., DeVitto* versus *Department of Transportation*, 64 M.S.P.R. 354, 357–58 (1994). Section 842.804(c) provides that if an employee is in a position not subject to the higher LEO withholding rate, and the employee does not, within six months after entering the position or after any significant change in the position, formally and in writing seek a determination from the employing agency that his or her position is properly covered by the higher withholding rate, the agency head's determination that the service was not so covered at the time of the service is presumed to be correct. The presumption may be rebutted by a preponderance of the evidence that the employee was unaware of his or her status or was prevented by cause beyond his or her control from requesting that the official status be changed when the service was performed. Thus, under *DeVitto*, if a request for LEO coverage is not made within the time limit set forth in the regulation and neither of the circumstances specified in the regulation is present, an appeal of the agency's denial of LEO coverage must be dismissed for lack of jurisdiction.

The appellants and amicus curiae National Treasury Employees Union argue that section 842.804(c) is invalid because it is contrary to statute and congressional intent. The appellants and amicus curiae assert that the statutory scheme grants special retirement coverage for LEOs, contains no deadlines for challenging adverse agency determinations as to employee status, and provides that an administrative action or order affecting the rights or interests of an individual under the provisions of chapter 84 maybe appealed to the Board under procedures prescribed by the Board.'' 5 U.S.C. § 8461(e)(1). Thus, they contend that the Board's jurisdiction to review the merits of agency head determinations is not qualified by any statutory obligation to presume the correctness of those determinations. Alternatively, they assert that section 842.804(c) is entitled to no deference because it is an arbitrary and unreasonable exercise of OPM's regulatory authority and violates the constitutional guarantees of due process.

The agency, by contrast, argues that the statute is silent on the matters covered in section 842.804(c), and that the section, promulgated pursuant to OPM's authority to prescribe regulations to carry out 5 U.S.C. chapter 84, is a time limit that is not arbitrary, capricious, or contrary to statute because it furthers the intent of the statute to provide LEO retirement coverage when a determination can be made that entitlement to coverage exists. The agency contends that it would be difficult to make these determinations based on the evidence required if employees could wait twenty years, until they believed they were eligible to retire, to request LEO retirement coverage.

The Board is inviting interested parties to submit amicus briefs addressing whether 5 CFR 842.804(c) is

invalid, unreasonable, or violates due process. Resolution of this issue may depend, in part, on how section 842.804(c) should be interpreted, i.e., as jurisdictional, see DeVitto, 64 M.S.P.R. at 357, as a rule affecting the Board's analysis of the appellants' burden of proof on the merits, or as a timeliness requirement couched in jurisdictional and/or merits language.

DATES: All briefs in response to this notice shall be filed with the Clerk of the Board on or before July 11, 1997.

ADDRESSES: All briefs shall include the case name and docket number noted above (*Fitzgerald et al.* versus *Department of Defense*, MSPB Docket No. PH–0842–94–0200–B–1) and be entitled ''Amicus Brief.'' Briefs should be filed with the Office of the Clerk, Merit Systems Protection Board, 1120 Vermont Avenue, NW., Washington, DC 20419.

FOR FURTHER INFORMATION CONTACT: Shannon McCarthy, Deputy Clerk of the Board, or Matthew Shannon, Counsel to the Clerk, (202) 653–7200.

Dated: June 10, 1997.

Robert E. Taylor,

Clerk of the Board.

[FR Doc. 97–15652 Filed 6–13–97; 8:45 am]

BILLING CODE 7400–01–M

NATIONAL COUNCIL ON DISABILITY

Sunshine Act Meeting

TYPE: Quarterly Meeting.

AGENCY: National Council on Disability.

SUMMARY: This notice sets forth the schedule and proposed agenda of the forthcoming quarterly meeting of the National Council on Disability. Notice of this meeting is required under Section 522b(e)(1) of the Government in the Sunshine Act, (P.L. 94–409).

DATES: August 4–6, 1997, 8:30 a.m. to 5:00 p.m.

LOCATION: The Ritz Carlton Atlanta, 181 Peachtree Street, NE, Atlanta, GA 30303; 404–659–0400.

FOR INFORMATION CONTACT: Mark S. Quigley, Public Affairs Specialist, National Council on Disability, 1331 F Street NW, Suite 1050, Washington, D.C. 20004–1107; 202–272–2004 (Voice), 202–272–2074 (TTY), 202–272–2022 (Fax).

AGENCY MISSION: The National Council on Disability is an independent federal agency composed of 15 members appointed by the President of the United States and confirmed by the U.S. Senate. Its overall purpose is to promote policies, programs, practices, and procedures that guarantee equal opportunity for all people with disabilities, regardless of the nature of severity of the disability; and to empower people with disabilities to achieve economic self-sufficiency, independent living, and inclusion and integration into all aspects of society.

ACCOMMODATIONS: Those needing interpreters or other accommodations should notify the National Council on Disability prior to this meeting.

ENVIRONMENTAL ILLNESS: People with environmental illness must reduce their exposure to volatile chemical substances in order to attend this meeting. In order to reduce such exposure, we ask that you not wear perfumes or scents at the meeting. We also ask that you smoke only in designated areas and the privacy of your room. Smoking is prohibited in the meeting room and surrounding area.

OPEN MEETING: This quarterly meeting of the National Council on Disability will be open to the public.

AGENDA: The proposed agenda includes:

Reports from the Chairperson and the Executive Director

Committee Meetings and Committee Reports

Strategic Planning—Closed Work Session for Members and Staff

Youth Leadership Development Conference

Seventh Anniversary of the Americans with Disabilities Act (ADA)

History of ADA

Return-to-work Initiative

Disability Data Collection

Round-table Discussion on Outreach to Minorities with Disabilities

Unfinished Business

New Business

Announcements

Adjournment

Records will be kept of all National Council on Disability proceedings and will be available after the meeting for public inspection at the National Council on Disability.

Signed in Washington, D.C., on June 12, 1997.

Ethel D. Briggs,

Executive Director.

[FR Doc. 97–15823 Filed 6–12–97; 11:45 am]

BILLING CODE 6820–MA–M

NUCLEAR REGULATORY COMMISSION

[Docket No. 50–344]

Portland General Electric Company; Eugene Water and Electric Board; Pacific Power and Light Company; Notice of Issuance of Amendment to Possession-Only License

The U.S. Nuclear Regulatory Commission (Commission) has issued Amendment No. 198 to Possession-Only License No. NPF–1 issued to Portland General Electric Company (the licensee), which revised the Possession-Only License for the Trojan Nuclear Plant located in Columbia County, Oregon, along the west bank of the Columbia River, near the town of Rainier, Oregon. The amendment is effective as of the date of issuance.

The amendment modified the Trojan Nuclear Plant Possession-Only License to allow the processing of spent fuel debris in the Trojan Fuel Building.

The application for the amendment complies with the standards and requirements of the Atomic Energy Act of 1954, as amended (the Act), and the Commission's rules and regulations. The Commission has made appropriate findings as required by the Act and the Commission's rules and regulations in 10 CFR Chapter I, which are set forth in the license amendment.

Notice of Consideration of Issuance of Amendment to Facility Operating License and Opportunity for a Hearing in connection with this action was published in the **Federal Register** on February 7, 1997 (62 FR 5860). Licensee subsequent submittals dated March 31, 1997 and April 9, 1997 provided background information for clarification of several technical issues and were not outside the scope of the February 7, 1997 notice. No request for a hearing or petition for leave to intervene was filed following this notice. The Commission has prepared an Environmental Assessment related to the action and has determined not to prepare an environmental impact statement. Based upon the environmental assessment, the Commission has concluded that the issuance of the amendment will not have a significant effect on the quality of the human environment.

For further details with respect to the action see (1) the application for amendment dated October 23, 1996, and supplemented by submittals dated December 12, 1996, March 31, 1997, and April 9, 1997, (2) Amendment No. 198 to License No. NPF–1, (3) the Commission's related Safety Evaluation, and (4) the Commission's Environmental Assessment. All of these

items are available for public inspection at the Commission's Public Document Room, the Gelman Building, 2120 L Street NW., Washington, DC, and at the local public document room located at the Branford Price Millar Library, Portland State University, 934 S.W. Harrison Street, P.O. Box 1151, Portland, Oregon 97207.

Dated at Rockville, Maryland, this 9th day of June 1997.

For the Nuclear Regulatory Commission.

Michael T. Masnik,

Senior Project Manager, Non-Power Reactors and Decommissioning Project Directorate, Division of Reactor Program Management, Office of Nuclear Reactor Regulation.

[FR Doc. 97–15695 Filed 6–13–97; 8:45 am]

BILLING CODE 7590–01–P

NUCLEAR REGULATORY COMMISSION

[Docket Nos. 50–327 and 50–328]

Tennessee Valley Authority; Sequoyah Nuclear Plant, Units 1 And 2; Environmental Assessment and Finding of No Significant Impact

The U.S. Nuclear Regulatory Commission (NRC or the Commission) is considering issuance of amendments to Facility Operating License No. DPR–77 and DPR–79, issued to the Tennessee Valley Authority (TVA, the licensee), for operation of the Sequoyah Nuclear Plant, Units 1 and 2 (SQN), located in Hamilton County, Tennessee.

Environmental Assessment

Identification of the Proposed Action

The proposed amendments would revise the SQN Technical Specifications (TS) relating to storage of reactor fuel containing a higher enrichment of Uranium-235 (5.0 weight-percent (w/o) vs. 4.5 w/o) in the new fuel pit storage racks. The Commission has already authorized use of the more highly-enriched fuel in the reactor core and storage in the spent fuel pool in previous license amendments.

The proposed amendments are in accordance with TVA's application dated March 13, 1997.

Need for the Proposed Action

The proposed changes to the Facility Operating Licenses are needed so that the licensee can use more highly enriched fuel, and thereby provide the flexibility of extending the fuel irradiation/burnup to permit longer fuel cycles (i.e., longer continuous periods of operation). Use of the proposed more highly enriched fuels would require the use of fewer fuel assemblies over the remaining life of the plant.

Environmental Impacts of the Proposed Action

The Commission has completed its evaluation of the proposed revisions to the TS. The proposed revision would permit use of fuel enriched with Uranium-235 (U–235) up to 5.0 nominal w/o. The safety considerations associated with reactor operation using higher fuel enrichment and burnup rates have been evaluated by the NRC staff (the staff). Based on its review, the staff concludes that the proposed changes are acceptable and would not adversely affect plant safety. The proposed changes have no adverse affect on the probability of any accident. The increased burnup may slightly change the mix of fission products that might be released in the event of a serious accident but such small changes would not significantly affect the environmental consequences of serious accidents. No changes are being made in the types or amounts of any radiological effluents that may be released offsite during normal plant operations. There is also no significant increase in the allowable individual or cumulative occupational radiation exposure. Accordingly, the Commission concludes that there are no significant radiological environmental impacts associated with the proposed action.

With regard to potential nonradiological impacts, the proposed changes to the TS involve components in the plant which are located within the restricted area as defined in 10 CFR Part 20. They do not affect nonradiological plant effluents and have no other environmental impacts. Accordingly, the Commission concludes that there are no significant nonradiological environmental impacts associated with the proposed action.

The environmental impacts of transportation resulting from the use of more highly enriched fuel and extended burnup rates have been discussed in the generic staff assessment entitled ''NRC Assessment of the Environmental Effects of Transportation Resulting from Extended Fuel Enrichment and Irradiation,'' dated July 7, 1988, and published in the **Federal Register** (53 FR 30355). As indicated therein, the environmental cost contribution of the proposed increase in fuel enrichment and irradiation limits are either unchanged or may in fact be reduced from those summarized in Table S–4 as set forth in 10 CFR 51.52(c).

Therefore, the staff concludes that there are no significant radiological or nonradiological environmental impacts associated with the proposed amendment. The staff finds that the action will not result in a significant increase in any adverse environmental impact previously evaluated in the SQN Final Environmental Statement (FES) dated February 13, 1974, as modified by NRC's testimony to the Atomic Safety and Licensing Board, supplements to the FES, environmental impact appraisals, or decisions of the Atomic Safety and Licensing Board.

Alternatives to the Proposed Action

Since the Commission has concluded there is no measurable environmental impact associated with the proposed action, any alternatives with equal or greater environmental impact need not be evaluated. As an alternative to the proposed action, the staff considered denial of the proposed action. Denial of the application would result in no change in current environmental impacts and would result in reduced operational flexibility. The environmental impacts of the proposed action and the alternative action are similar.

Alternative Use of Resources

The action would involve no use of resources not previously considered in the FES for SQN.

Agencies and Persons Consulted

In accordance with its stated policy, on June 10, 1997 the staff consulted with the Tennessee State official, Eddy Nanney of the Tennessee Division of Radiological Health, regarding the environmental impact of the proposed action. The State official posed the question of whether or not TVA had revisited its emergency planning procedures because of a perceived higher source term in the core. The staff has already reviewed the use of 5.0 w/o fuel enrichment and higher fuel burnup prior to issuing the Sequoyah license amendments authorizing use of 5.0 w/o enriched fuel in the reactor core. These amendments were issued on August 1, 1990, and the supporting NRC Environmental Assessment was published in the **Federal Register** on July 31, 1990 (55 FR 31112). The Environmental Assessment stated the following:

> The increased burnup may slightly change the mix of fission products that might be released in the event of a serious accident but such small changes would not significantly affect the environmental consequences of serious accidents. The effect of increasing the fuel enrichment to 5.0 percent and burnups to 60,000 MWD/MTU would be to only increase the calculated thyroid dose for the postulated fuel handling accident by about 20% and would not exceed acceptable

values. There would be no effect on the estimated consequences of other postulated design basis accidents.

The action for which this current Environmental Assessment has been prepared only authorizes storage of new unirradiated fuel in the in the new fuel pit storage racks. This pit is maintained dry (not flooded) and new fuel stored therein would not be involved in any of the accident analyses that form the design basis of the plant. Therefore, it is not necessary to revisit emergency preparedness procedures because of these license amendments.

The staff reviewed the licensee's request and did not consult with agencies or persons other than the State of Tennessee.

Finding of No Significant Impact

Based upon the environmental assessment, the Commission concludes that the proposed action will not have a significant effect on the quality of the human environment. Accordingly, the Commission has determined not to prepare an environmental impact statement for the proposed action.

For further details with respect to the proposed action, see the licensee's letter dated March 13, 1997, which is available for public inspection at the Commission's Public Document Room, The Gelman Building, 2120 L Street, NW., Washington, DC, and at the local public document room located at the Chattanooga-Hamilton County Library, 1001 Broad Street, Chattanooga, Tennessee.

Dated at Rockville, Maryland, this 11th day of June 1997.

For the Nuclear Regulatory Commission.

Frederick J. Hebdon,

Director, Project Directorate II–3, Division of Reactor Projects—I/II, Office of Nuclear Reactor Regulation.

[FR Doc. 97–15694 Filed 6–13–97; 8:45 am]

BILLING CODE 7590–01–P

NUCLEAR REGULATORY COMMISSION

Draft Regulatory Guide; Issuance, Availability

The Nuclear Regulatory Commission has issued for public comment a draft of a guide planned for its Regulatory Guide Series. This series has been developed to describe and make available to the public such information as methods acceptable to the NRC staff for implementing specific parts of the NRC's regulations, techniques used by the staff in evaluating specific problems or postulated accidents, and data needed by the staff in its review of applications for permits and licenses.

The draft guide, temporarily identified by its task number, DG–1067, ''Decommissioning of Nuclear Power Reactors,'' is planned for Division 1, ''Power Reactors.'' This regulatory guide is being developed to describe methods and procedures that are acceptable to the NRC staff for implementing the requirements of the final rule on decommissioning that pertain to the initial activities and the major phases of the process of decommissioning nuclear power reactors.

The draft guide has not received complete staff review and does not represent an official NRC staff position.

Public comments are being solicited on the guide. Comments should be accompanied by supporting data. Written comments may be submitted to the Rules Review and Directives Branch, Office of Administration, U.S. Nuclear Regulatory Commission, Washington, DC 20555. Copies of comments received may be examined at the NRC Public Document Room, 2120 L Street NW., Washington, DC. Comments will be most helpful if received by August 18, 1997.

Although a time limit is given for comments on this draft guide, comments and suggestions in connection with items for inclusion in guides currently being developed or improvements in all published guides are encouraged at any time.

Comments may be submitted electronically, in either ASCII text or Wordperfect format (version 5.1 or later), by calling the NRC Electronic Bulletin Board on FedWorld. The bulletin board may be accessed using a personal computer, a modem, and one of the commonly available communications software packages, or directly via Internet.

If using a personal computer and modem, the NRC subsystem on FedWorld can be accessed directly by dialing the toll free number: 1–800–303–9672. Communication software parameters should be set as follows: parity to none, data bits to 8, and stop bits to 1 (N,8,1). Using ANSI or VT–100 terminal emulation, the NRC NUREGs and RegGuides for Comment subsystem can then be accessed by selecting the ''Rules Menu'' option from the ''NRC Main Menu.'' For further information about options available for NRC at FedWorld, consult the ''Help/Information Center'' from the ''NRC Main Menu.'' Users will find the ''FedWorld Online User's Guides'' particularly helpful. Many NRC subsystems and data bases also have a ''Help/Information Center'' option that is tailored to the particular subsystem.

The NRC subsystem on FedWorld can also be accessed by a direct dial phone number for the main FedWorld BBS, 703–321–3339, or by using Telnet via Internet, fedworld.gov. If using 703–321–3339 to contact FedWorld, the NRC subsystem will be accessed from the main FedWorld menu by selecting the ''Regulatory, Government Administration and State Systems,'' then selecting ''Regulatory Information Mall.'' At that point, a menu will be displayed that has an option ''U.S. Nuclear Regulatory Commission'' that will take you to the NRC Online main menu. The NRC Online area also can be accessed directly by typing ''/go nrc'' at a FedWorld command line. If you access NRC from FedWorld's main menu, you may return to FedWorld by selecting the ''Return to FedWorld'' option from the NRC Online Main Menu. However, if you access NRC at FedWorld by using NRC's toll-free number, you will have full access to all NRC systems but you will not have access to the main FedWorld system.

If you contact FedWorld using Telnet, you will see the NRC area and menus, including the Rules menu. Although you will be able to download documents and leave messages, you will not be able to write comments or upload files (comments). If you contact FedWorld using FTP, all files can be accessed and downloaded but uploads are not allowed; all you will see is a list of files without descriptions (normal Gopher look). An index file listing all files within a subdirectory, with descriptions, is included. There is a 15-minute time limit for FTP access.

Although FedWorld can be accessed through the World Wide Web, like FTP that mode only provides access for downloading files and does not display the NRC Rules menu.

For more information on NRC bulletin boards call Mr. Arthur Davis, Systems Integration and Development Branch, U.S. Nuclear Regulatory Commission, Washington, DC 20555, telephone (301)415–5780; e-mail AXD3@nrc.gov. For more information on this draft regulatory guide, contact M.T. Masnik at the NRC, telephone (301)415–1191; e-mail mtm2@nrc.gov.

Regulatory guides are available for inspection at the Commission's Public Document Room, 2120 L Street NW., Washington, DC. Requests for single copies of draft or final guides (which may be reproduced) or for placement on an automatic distribution list for single copies of future draft guides in specific divisions should be made in writing to the U.S. Nuclear Regulatory

Commission, Washington, DC 20555, Attention: Printing, Graphics and Distribution Branch; or by fax at (301) 415–5272. Telephone requests cannot be accommodated. Regulatory guides are not copyrighted, and Commission approval is not required to reproduce them.

(5 U.S.C. 552(a))

Dated at Rockville, Maryland, this 4th day of June 1997.

For the Nuclear Regulatory Commission.

Joseph A. Murphy,

Director, Division of Regulatory Applications, Office of Nuclear Regulatory Research.

[FR Doc. 97–15696 Filed 6–13–97; 8:45 am]

BILLING CODE 7590–01–P

PRESIDENTIAL ADVISORY COMMITTEE ON GULF WAR VETERANS' ILLNESSES

Meeting

AGENCY: Presidential Advisory Committee on Gulf War Veterans' Illnesses.

ACTION: Notice of open meeting.

SUMMARY: This notice is hereby given to announce an open meeting of a panel of the Presidential Advisory Committee on Gulf War Veterans' Illnesses. The panel will discuss several issues relevant to the Committee's charter and will receive comment from members of the public.

DATES: July 29, 1997, 9:00 a.m.–4:30 p.m.; July 30, 8:30 a.m.–4:00 p.m.

PLACE: Hilton Buffalo, 120 Church Street, Buffalo, NY 14202.

SUPPLEMENTARY INFORMATION: The President established the Presidential Advisory Committee on Gulf War Veterans' Illnesses by Executive Order 12961, May 26, 1995, and extended its tenure by Executive Order 13034, January 30, 1997. The purpose of this Committee is to review and provide recommendations on the government's investigation of possible chemical and biological weapons exposure incidents during the Gulf War and on implementation of the Committee's prior recommendations. The Committee reports to the President through the Secretary of Defense, the Secretary of Health and Human Services, and the Secretary of Veterans Affairs. The Committee members have expertise relevant to the functions of the Committee and are appointed by the President from non-Federal sectors.

Tentative Agenda

Tuesday, July 29, 1997

9:00 a.m.
Call to order
Public comment
10:00 a.m.
Briefings related to implementation of *Final Report* recommendations
10:30 a.m.
Briefings related to chemical warfare agent exposure issues
11:15 a.m.
Break
11:30 a.m.
Briefings related to chemical warfare agent exposure issues
12:30 p.m.
Lunch
1:45 p.m.
Briefings related to chemical warfare agent exposure issues
4:30 p.m.
Meeting recessed

Wednesday, July 30, 1997

8:30 a.m.
Call to order
8:35 a.m.
Briefings related to implementation of *Final Report* recommendations
9:15 a.m.
Briefings related to chemical warfare agent exposure issues
10:30 a.m.
Break
10:45 a.m.
Briefings related to chemical warfare agent exposure issues
12:30 p.m.
Lunch
1:30 p.m.
Briefings related to chemical warfare agent exposures issues
3:30 p.m.
Committee and staff discussion: Next steps
4:00 p.m.
Meeting adjourned

A final agenda will be available at the meeting.

Public Participation

The meeting is open to the public. Members of the public who wish to make oral statements should contact the Committee at the address or telephone number listed below at least five business days prior to the meeting. Reasonable provisions will be made to include on the agenda presentations from individuals who have not yet had an opportunity to address the Committee. Priority will be given to Gulf War veterans whose accounts of firsthand experience with chemical and biological warfare agent detections previously have not been conveyed to the Committee. The panel chair is empowered to conduct the meeting in a fashion that will facilitate the orderly conduct of business. People who wish to file written statements with the Committee may do so at any time.

FOR FURTHER INFORMATION CONTACT: Nancy Rocha, Presidential Advisory Committee on Gulf War Veterans' Illnesses, 1411 K Street, N.W., suite 1000, Washington, DC 20005, Telephone: (202) 761–0066, Fax: (202) 761–0310.

Dated: June 10, 1997.

C.A. Bock,

Federal Register Liaison Officer, Presidential Advisory Committee on Gulf War Veterans' Illnesses.

[FR Doc. 97–15625 Filed 6–13–97; 8:45 am]

BILLING CODE 3610–76–M

SECURITIES AND EXCHANGE COMMISSION

[Release No. IC–22696; 811–5741]

AIM Strategic Income Fund, Inc.; Notice of Application

June 10, 1997.

AGENCY: Securities and Exchange Commission (''SEC'').

ACTION: Notice of application for deregistration under the Investment Company Act of 1940 (the ''Act'').

APPLICANT: AIM Strategic Income Fund, Inc.

RELEVANT SECTION OF ACT: Order requested under section 8(f).

SUMMARY OF APPLICATION: Applicant seeks an order declaring that it has ceased to be an investment company.

FILING DATES: The application was filed on December 23, 1996, and amended on April 9, 1997.

HEARING OR NOTIFICATION OF HEARING: An order granting the application will be issued unless the SEC orders a hearing. Interested persons may request a hearing by writing to the SEC's Secretary and serving applicant with a copy of the request, personally or by mail. Hearing requests should be received by the SEC by 5:30 p.m. on July 7, 1997, and should be accompanied by proof of service on the applicant, in the form of an affidavit or, for lawyers, a certificate of service. Hearing requests should state the nature of the writer's interest, the reason for the request, and the issues contested. Persons may request notification of a hearing by writing to the SEC's Secretary.

ADDRESSES: Secretary, SEC, 450 Fifth Street, NW., Washington, DC 20549. Applicant, 11 Greenway Plaza, Suite 1919, Houston, Texas 77046.

FOR FURTHER INFORMATION CONTACT: H.R. Hallock, Jr., Special Counsel, at (202) 942–0564, or Mercer E. Bullard, Branch Chief, at (202) 942–0564 (Division of Investigation Management,

Office of Investment Company Regulation).

SUPPLEMENTARY INFORMATION: The following is a summary of the application. The complete application may be obtained for a fee from the SEC's Public Reference Branch.

Applicant's Representations

1. Applicant, a Maryland corporation, is a closed-end management investment company. Applicant registered under the Act and filed a registration statement on Form N–2 under section 8(b) of the Act on December 23, 1988. The registration statement was made effective and applicant commenced an initial public offering of its shares on March 23, 1989.

2. On March 12, 1996, applicant's board of directors (the ''Board'') approved an Agreement and Plan of Reorganization (the ''Agreement'') between applicant and AIM Funds Group (''AFG''), an open-end management investment company with multiple portfolios. The Agreement provided for the sale of applicant's assets to the AIM High Yield Fund (the ''Acquiring Fund''), a portfolio of AFG, in exchange for shares of the Acquiring Fund (the ''Reorganization''). Applicant and the Acquiring Fund have the same investment adviser, AIM Advisors, Inc., and accordingly may be deemed to be affiliated persons of one another. Applicant therefore relied on rule 17a–8 under the Act of effect the Reorganization.[1]

3. As required by rule 17a–8, the Board, including each of applicant's directors who is not an ''interested person'' of applicant, found that the Reorganization was in applicant's best interests and would not dilute the interests of its existing shareholders. The Board determined that consummation of the Reorganization was in the best interests of applicant's shareholders because, among other things, it would eliminate the discount from net asset value at which applicant's shares had normally traded. Other important considerations in the Board's determination were that (a) applicant and the Acquiring Fund had a similar investment objective of seeking high current income, (b) the Acquiring Fund's effective advisory fee was lower than applicant's fee, (c) the Acquiring Fund's yield was higher than applicant's yield, and (d) applicant's shareholders would be able to exchange their shares for shares of other funds in The AIM Family of Funds at net asset value.

4. At the time of the Reorganization, the Acquiring Fund had two classes of shares—Class A shares with a front-end sales charge and a 12b–1 fee and Class B shares with a deferred sales charge and a higher 12b–1 fee. The Agreement provided that applicant's shareholders would receive the number of Class A shares of the Acquiring Fund upon consummation of the Reorganization having an aggregate net asset value equal to the net value of applicant's assets transferred to the Acquiring Fund. The front-end charge normally associated with sales of the Acquiring Fund's Class A shares was waived. The Board deemed it to be in the best interest of applicant's shareholders to receive the Acquiring Fund's Class A shares at net asset value.

5. On or about June 7, 1996, a combined proxy statement/prospectus was distributed to applicant's shareholders. At the annual meeting of applicant's shareholders on July 19, 1996, a majority of shareholders voted for approval of the Agreement and consummation of the Reorganization.

6. As of July 26, 1996, the business day immediately preceding the Reorganization, applicant had 6,976,644 shares of common stock outstanding with an aggregate net asset value of $69,521,407.14 or $9.81 per share. On July 29, 1996, applicant transferred all of its assets to the Acquiring Fund and the Acquiring Fund assumed all of the liabilities of applicant. In addition, the Acquiring Fund issued directly to each of applicant's shareholders that number of the Acquiring Fund's Class A shares with an aggregate net asset value equal to the aggregate net asset value of his or her shares of applicant.

7. Expenses incurred in connection with the Reorganization included legal fees, accounting fees, proxy fees and proxy solicitation fees. Applicant paid all of such expenses, which amounted to $144,930.39. Applicant did not pay any brokerage commissions in connection with the transfer of its assets to the Acquiring Fund.

8. As of the date of filing of the initial application applicant had no shareholders, assets, outstanding debt or expenses. Applicant is not a party to any litigation or administrative proceeding. Applicant is neither engaged, nor does it propose to engage, in any business activities other than those necessary for the winding-up of its affairs.

9. Applicant intends to file articles of dissolution with the State of Maryland.

For the SEC, by the Division of Investment Management, under delegated authority.

Margaret H. McFarland,

Deputy Secretary.

[FR Doc. 97–15714 Filed 6–13–97; 8:45 am]

BILLING CODE 8010–01–M

[1] Rule 17a–8 provides an exemption from section 17(a) of the Act for certain reorganizations among registered investment companies that may be affiliated persons, or affiliated persons of an affiliated person, solely by reason of having a common investment adviser, common directors, and/or common officers.

SECURITIES AND EXCHANGE COMMISSION

Sunshine Act Meeting

FEDERAL REGISTER CITATION OF PREVIOUS ANNOUNCEMENT: [62 FR 30911, June 5, 1997].

STATUS: Closed Meeting.

PLACE: 450 Fifth Street, NW., Washington, DC.

DATE PREVIOUSLY ANNOUNCED: June 5, 1997.

CHANGE IN THE MEETING: Correction/Deletion.

The following item, inadvertently cited for consideration at a closed meeting held on Wednesday, June 11, 1997, was considered in a closed meeting held on Monday, June 9, 1997, following the 10:00 a.m. open meeting:

Post oral argument discussion.

The following items were not considered at the closed meeting held on Wednesday, June 11, 1997: Opinions.

Commission Hunt, as duty officer, determined that Commission business required the above changes and that no earlier notice thereof was possible.

At times, changes in Commission priorities require alterations in the scheduling of meeting items. For further information and to ascertain what, if any, matters have been added, deleted or postponed, please contact:

The Office of the Secretary (202) 942–7070.

Dated: June 11, 1997.

Margart H. McFarland,

Deputy Secretary.

[FR Doc. 97–15837 Filed 6–12–97; 12:53 pm]

BILLING CODE 8010–01–M

SECURITIES AND EXCHANGE COMMISSION

Sunshine Act Meeting

Notice is hereby given, pursuant to the provisions of the Government in the Sunshine Act, Pub. L. 94–409, that the Securities and Exchange Commission will hold the following meetings during the week of June 16, 1997.

A closed meeting will be held on Monday, June 16, 1997, at 2:00 p.m. An open meeting will be held on Wednesday, June 18, 1997, at 10:00 a.m.

Commissioners, Counsel to the Commissioners, the Secretary to the

Commission, and recording secretaries will attend the closed meeting. Certain staff members who have an interest in the matters may also be present.

The General Counsel of the Commission, or his designee, has certified that, in his opinion, one or more of the exemptions set forth in 5 U.S.C. 552b (c)(4), (8), (9)(A) and (10) and 17 CFR 200.402(a) (4), (8), (9)(i) and (10), permit consideration of the scheduled matters at the closed meeting.

Commissioner Hunt, as duty officer, voted to consider the items listed for the closed meeting in a closed session.

The subject matter of the closed meeting scheduled for Monday, June 16, 1997 at 2:00 p.m., will be:

Institution and settlement of injunctive actions.

Institution and settlement of administrative proceedings of an enforcement nature.

Formal order of investigation.

Opinions.

The subject matter of the open meeting scheduled for Wednesday, June 18, 1997 at 10:00 a.m., will be:

Consideration of whether to adopt certain recommendations of the Task Force on Disclosure Simplification. The recommendations include the rescission of two forms and one rule that are no longer necessary or appropriate for the protection of investors and the adoption of one rule and amendment of a number of other rules and forms to eliminate unnecessary requirements and to streamline the disclosure process. For further information, please contact Felicia H. Kung at (202) 942–2990.

At times, changes in Commission priorities require alterations in the scheduling of meeting items. For further information and to ascertain what, if any, matters have been added, deleted or postponed, please contact: the Office of the Secretary at (202) 942–7070.

Dated: June 11, 1997.

Margaret H. McFarland,

Deputy Secretary.

[FR Doc. 97–15838 Filed 6–12–97; 12:53 pm]

BILLING CODE 8010–01–M

SECURITIES AND EXCHANGE COMMISSION

[Release No. 34–38729; File No. SR–NASD–97–14]

Self-Regulatory Organizations; Order Granting Approval of Proposed Rule Change and Notice of Filing and Order Granting Accelerated Approval of Amendment No. 1 Thereto by the National Association of Securities Dealers, Inc., Relating to the Amendment of its Margin Rules

June 10, 1997.

I. Introduction

On February 26, 1997, the NASD Regulation, Inc. (''NASD Regulation'') submitted to the Securities and Exchange Commission (''SEC'' or ''Commission''), pursuant to Section 19(b)(1) of the Securities Exchange Act of 1934 (''Act'') [1] and Rule 19b–4 thereunder,[2] a proposed rule change to amend certain sections of the National Association of Securities Dealers, Inc.'s (''NASD'' or ''Association'') margin rules.

The proposed rule change was published for comment in Securities Exchange Act Release No. 38463 (April 1, 1997), 62 FR 17260 (April 9, 1997). the NASD submitted to the Commission Amendment No. 1 on May 30, 1997.[3] No comments were received on the proposal.

This order approves the proposed rule change.

II. Description of the Proposal

The NASD Regulation proposes to amend its margin rule, Rule 2520 of the Conduct Rules, of the NASD. Specifically, the NASD Regulation proposes to amend Rule 2420 (''old Rule 2520) to: (1) renumber paragraphs (a) and (b) as Rules 2521 and 2522, respectively, and renumber paragraph (c) as Rule 2520 (referred to herein as ''Rule 2520''); (2) conform Rule 2520 to recent amendments to Regulation T (''Regulation T'') [4] of the Board of Governors of the Federal Reserve System (''Federal Reserve Board'' or ''Board''); and (3) add margin requirements for various over-the-counter (''OTC'') options and interest rate composite securities.

As a result of the Federal Reserve Board's recent amendments to Regulation T, which governs the extension of credit by broker/dealers,[5] and the NYSE's proposed amendments to its margin rule, NYSE Rule 431,[6] NASD Regulation proposes to renumber old Rule 2520 so as to permit its members and others to more easily use and compare the provisions of the rule with NYSE Rule 431. In addition, NASD Regulation proposes amendments to Rule 2520, the NASD's margin rule, to conform the NASD's margin requirements to those of Regulation T and NYSE Rule 431.

Numbering

The NASD Regulation proposes to renumber old Rule 2520 by: (1) Renumbering paragraphs (a) and (b) as Rules 2521 and 2522, respectively; and (2) renumbering paragraph (c) as Rule 2520. The NASD Regulation states that this renumbering will cause most of the paragraphs and subparagraphs of Rule 2520 to have the same numbering as those of NYSE Rule 431, thereby facilitating comparison and use of the two rules. The renumbered Rule 2520 is set forth in Exhibit 2 to the rule filing; however, the former numbering of each subsection is not shown.

Amendments to Conform Rule 2520 to Regulation T

The NASD Regulation proposes two technical changes to Rule 2520 (as renumbered) to correct references to recently-repealed or renumbered provisions of Regulation T: (1) definition of OTC margin bond, and (2) cash equivalent. NASD Rule 2520(e)(2)(C), which refers to the definition of OTC margin bond as stated in Regulation T, 12 CFR 220.2(t),[7] is proposed to be amended to eliminate the ''(t)'' because Regulation T, 12 CFR 220.2 has been amended to eliminate subsection numbering. NASD Rule 2520(f)(2)(H)(iv), which refers to cash equivalents as ''those instruments referred to in Section 220.8(a)(3)(ii) of Regulation T,'' is proposed to be amended to change the reference to ''Section 220.2 of Regulation T.''

Amendments to Conform Rule 2520 to Recent Amendments to NYSE Rule 431

Option Products and Interest Rate Composites. NASD Rule 2520 currently

[1] 15 U.S.C. 78s(b)(1).

[2] 17 CFR 240.19b–4

[3] *See* Letter from Elliot R. Curzon, Assistant General Counsel, NASD Regulation, to Katherine A. England, Assistant Director, Division of Market Regulation (''Market Regulation''), Commission, dated May 30, 1997 (''NASD Amendment No. 1'').

[4] 12 CFR 220.1 through 19 (1996).

[5] *See* 61 FR 20386 (May 6, 1996) (Federal Reserve Board's release adopting certain changes to Regulation T).

[6] *See* Securities Exchange Act Release No. 38708 (June 2, 1997) (Commission order approving SR–NYSE–97–01, margin rule changes by NYSE).

[7] The definition of OTC margin bond in Regulation T, 12 CFR 220.2 refers to several types of debt securities with specifically defined characteristics, all of which are sold or traded over-the-counter, not on an exchange.

requires customer margin for short OTC stock and index options of 100% of the option premium plus 45% of the current market value of the underlying security. The NASD proposes to amend this rule by adding specific margin requirements for OTC options equal to a specific percentage of the current value of the underlying component to conform these provisions with the corresponding provisions of NYSE Rule 431. In addition, a new definition of the term ''underlying component'' is being proposed as paragraph 2522(a)(66) to replace more complex references to ''underlying security or the product of the current index group value of the underlying index stock group.''

The principal amendments to Rule 2520, paragraphs (f)(2) (D) and (F), include new initial and maintenance margin requirements (including provisions for reduced margin requirements under certain circumstances) for:

- OTC options on stock and convertible corporate debt (30%), industry index stock groups (30%) and broad index stock groups (20%).
- OTC options on 30-year U.S. Treasury bonds and nonmortgage backed U.S. Government agency debt securities that qualify for exemption pursuant to SEC Rule 3a12–7 (3%).
- OTC options on all other U.S. Government securities including agency debt (5%), and marginable corporate debt securities (15%). OTC options on all other securities including CMO's remain subject to the current 45% general OTC option margin requirement.
- Interest rate contracts (10%) to be consistent with other exchanges.

In addition, the proposed amendments recognize certain spread and straddle positions for margin purposes between listed and OTC options when a customer's long and short positions are controlled by the same broker-dealer.

Specialists and Market-Makers Options Margin. NASD Regulation has also proposed to adopt specific provisions governing permitted offset treatment for options market-makers and specialists that were deleted from Regulation T as of June 1, 1997. The proposed rule sets forth various permitted offset positions which may be cleared and carried by a member organization on behalf of one or more options market-markers or specialists upon a margin basis satisfactory to the concerned parties (''good faith'' margin). In addition, it requires that the amount of an deficiency between the equity maintained by the options market-maker or specialists and the haircuts specified in SEC Rule 15c3–1 [8] shall be considered as a deduction from net worth in the net capital computation of the carrying broker.

III. Discussion

After careful review of the NASD's proposed amendment to its margin rules, and for the reasons discussed below, the Commission believes that the proposed rule filing is consistent with the requirements of the Act and the rules and regulations thereunder applicable to an association, and, in particular, with the requirements of Section 15A(b).[9]

Specifically, the Commission believes the proposed rule filing is consistent with the Section 15A(b)(6) requirements that an association have rules that are designed to prevent fraudulent and manipulative acts and practices, to promote just and equitable principles of trade, to foster cooperation and coordination with persons engaged in regulating, clearing, settling, processing information with respect to, and facilitating transactions in securities, to remove impediments to protect and perfect the mechanism of free and open market and a national market system, and in general, to protect investors and the public interest.[10]

Numbering

The Commission supports the NASD's decision to renumber its Rule 2520 in order to streamline comparison with NYSE Rule 431. According to the NASD, its former Article III, Section 30 of the NASD Rules of Fair Practice had substantially the same margin requirements as NYSE Rule 431. The NASD states that several years ago Section 30 was amended to adopt the same numbering scheme as NYSE Rule 431 in order to facilitate the use and comparison of the two rules. Thus, any member could find the provisions in both the NASD and NYSE's rules under the same subsection number ''(f)(2).''

However, in 1996 the NASD Manual was reorganized and a new rule numbering conventions were adopted that resulted in the renumbering of Article III, Section 30, as old Rule 2520. Under the 1996 numbering scheme, old Section 30.3(f)(2), for example, became old Rule 2520(c)(6)(B). As a result of these numbering changes, comparison between old Rule 2520 and NYSE Rule 431 became more problematic.

NASD Regulation proposes to renumber old Rule 2520 by: (1) Renumbering paragraphs (a) and (b) as Rules 2521 and 2522, respectively; and (2) renumbering paragraph (c) as Rule 2520. The proposed changes will once again result in most of the paragraphs and subparagraphs of Rule 2520 having the same numbering as NYSE Rule 431, thereby facilitating comparison and use of the two rules.

The Commission believes that the NASD, by renumbering its margin rules to conform with NYSE Rule 431, is ensuring that a cohesive cross reference is available to guide NASD members and interested parties.[11] The Commission believes the proposal by the NASD Regulation will promote coordination in regulating, clearing, settling, and facilitating transactions in securities by providing for uniformity in the SROs' margin schemes and reducing confusion among customers. The Commission believes that a more unified set of margin rules will improve market efficiency, competition and capital formation, while at the same time reducing the risk for conflict and misunderstanding which can have detrimental effects on the market place especially regarding the use of margins.

Amendments to Conform Rule 2520 to Regulation T

The NASD Regulation proposes two technical changes to Rule 2520 (as renumbered) to correct references to recently-repealed or renumbered provisions of Regulation T: (1) definition of OTC margin bond, and (2) cash equivalent. NASD Rule 2520(e)(2)(C), which refers to the definition of OTC margin bond as stated in Regulation T, 12 CFR 220.2(t),[12] is proposed to be amended to eliminate the ''(t)'' because Regulation T, 12 CFR 220.2 has been amended to eliminate subsection numbering. NASD Rule 2520(f)(2)(H)(iv), which refers to cash equivalents as ''those instruments referred to in Section 220.8(a)(3)(ii) of Regulation T,'' is proposed to be amended to change the reference to ''Section 220.2 of Regulation T.'' This is necessary because when Regulation T was amended, Section 220.8(a)(3)(ii) was amended to eliminate conditions relating to cash equivalents and Section

[1] *See* Securities Exchange Act Release No. 38248 (February 6, 1997) 62 FR 6474 (February 12, 1997) (Final rule adopting changes to SEC Rule 15c3–1).

[9] 15 U.S.C. 78o–3.

[10] In approving these rules, the Commission has considered the proposed rules' impact on efficiency, competition, and capital formation. 15 U.S.C. § 78c(f).

[11] The Commission notes that approval was granted to a proposal by the Chicago Board Options Exchange, Incorporated (''CBOE'') which conforms several of its margin rules to those of the NYSE. *See* Securities Exchange Act Release No. 38709 (June 2, 1997), (Commission order approving SR-CBOE–97–17).

[12] *See supra* note 7.

220.2 was amended by adding a definition of cash equivalents. Accordingly, the Commission finds that these technical changes are reasonable.

Amendments To Conform Rule 2520 to Recent Amendments to NYSE Rule 431

Option Products and Interest Rate Composites. NASD Rule 2520, which currently requires customer margin for short OTC stock and index options of 100% of the option premium plus 45% of the current market value of the underlying security, is proposed to be amended by adding specific margin requirements for OTC options equal to a specific percentage of the current value of the underlying component to conform this provision with corresponding provisions contained in NYSE Rule 431. In addition, a new definition of the term ''underlying component'' is being added as paragraph 2522(a)(66) to replace more complex references to ''underlying security or the product of the current index group value of the underlying index stock group.''

According to the NASD, the principal amendments to Rule 2520, paragraphs (f)(2) (D) and (F), include new initial and maintenance margin requirements (including provisions for reduced margin requirements under certain circumstances) for:

- OTC options on stock and convertible corporate debt (30%), industry index stock groups (30%) and broad index stock groups (20%).
- OTC options on 30-year U.S. Treasury bonds and non-mortgage-backed U.S. Government agency debt securities that qualify for exemption pursuant to SEC Rule 3a12–7 (3%).
- OTC options on all other U.S. Government securities including agency debt (5%), and marginable corporate debt securities (15%). OTC options on all other securities including CMO's remain subject to the current 45% general OTC option margin requirement.
- Interest rate contracts (10%) to be consistent with other exchanges.[13]

In addition, the proposed amendments recognize certain spread and straddle positions for margin purposes between listed and OTC options when a customer's long and short positions are controlled by the same broker-dealer.

The margin treatment of OTC options proposed by the NASD Regulation is being patterned after, and is nearly identical to, the provisions contained in NYSE Rule 431(f)(2)(D)(iii). Given the near identical nature of the NASD Regulation's proposal to the NYSE's previously approved proposal, the Commission believes that adoption of these proposed standards is reasonable. The Commission also believes that this approach will promote coordination in regulating, clearing, settling, and facilitating transactions in securities by providing for uniformity in this area of the SROs' margin schemes and reducing confusion among customers.

Specialists and Market-Makers Options Margin. The NASD Regulation proposes changes to subparagraph (f)(2)(J) of Rule 2520 to make it substantially identical to that of the NYSE rule dealing with margin requirements for options transactions for market-makers and specialists. NASD Regulation has also proposed adopting specific provisions governing permitted offset treatment for market-makers and specialists that were deleted from Regulation T as of June 1, 1997. The proposed rule sets forth various permitted offset positions which may be cleared and carried by a member organization on behalf of one or more market-makers upon a margin basis satisfactory to the concerned parties (''good faith'' margin). In addition, it requires that the amount of any deficiency between the equity maintained by the market-maker and the haircuts specified in SEC Rule 15c3–1 shall be considered as a deduction from net worth in the net capital computation of the carrying broker.

A permitted offset position will be defined to mean, in the case of an option in which a market-maker makes a market, a position in the underlying instrument or other related instrument, and in the case of other securities in which a market-maker makes a market, a position in options overlying the securities in which a market-maker makes a market, if the account holds the following positions: (i) A long position in the underlying instrument offset by a short option position which is ''in- or at-the-money;'' (ii) a short position in the underlying instrument offset by a long option position which is ''in- or at-the-money;'' (iii) a stock position resulting from the assignment of a market-maker short option position; (iv) a stock position resulting from the exercise of a market-maker long position; (v) a net long position in a security (other than an option) in which a market-maker makes a market; (vi) a net short position in a security (other than an option) in which the market-maker makes a market; or (vii) an offset position as defined in SEC Rule 15c3–1.

The six proposed offsets described in proposed NASD Rule 2520(f)(2)(J) (a) to (f) codify the existing permitted offsets that were provided under Regulation T until June 1, 1997. These offset reflect well-recognized market-making hedging transactions involving certain options offset strategies involving the related underlying stock. The addition of NASD Rule 2520(f)(2)(J)(g), allowing any offset position defined under SEC Rule 15c3–1,[14] constitutes a significant expansion of permitted offset positions. According to the NASD Regulation, the inclusion of item (g) recognizes that options market-makers and specialists must engage in various hedging transactions to manage the risk involved in fulfilling their role, and, therefore, allows a member organization to clear and carry options market-makers and specialists offset positions as defined in SEC Rule 15c3–1 upon a good faith margin basis. The NASD Regulation has clarified its proposal to reflect that options market-makers and specialists are permitted to relieve good faith margin for all permitted offset positions only if they are effected for market-making purposes such as hedging, reducing the risk of rebalancing, liquidating open positions of the market-maker, accommodating customer orders, or another similar market-making purpose.[15]

The Commission believes that the proposal is a reasonable effort by NASD Regulation to accommodate the needs of options market-makers and specialists in undertaking their market-making responsibilities as it recognizes the occasional need for options market-makers and specialists to effect transactions in their course of dealing in options classes for which they are not registered. The Commission believes that this approach will not adversely affect the depth and liquidity necessary to maintain fair and orderly markets. The Commission expects clearing firms that are members of the NASD and other NASD members that extend margin to options market-makers and specialists to implement adequate procedures to ensure that the elected offsets are recorded accurately and cleared into appropriate accounts. In addition, such members should have a reasonable basis for determining that the offset transactions satisfy the market-making requirements set forth in NASD Rule 462(d)2(J). The Commission believes that these requirements will ensure that transactions effected by options market-makers and specialists receiving the offset treatment are in fact directly related to their market-making function

[13] The NASD does not have a margin requirement for interest rate contracts in its rules. NASD Regulation is adding this provision for interest rate contracts pursuant to this rule filing in order to be consistent with the margin provisions of the NYSE.

[14] *See supra* note 8.

[15] *See* NASD Amendment No. 1, *supra* note 3.

and are not effected for speculative purposes on a margin basis which should be available only for bona fide market-making activity.

The proposed definition by NASD Regulation of ''in- or at-the-money,'' for purposes of permitted offset transactions, represents a codification of a long standing practice of permitting the financing of options market-makers underlying stock positions on a good faith basis when offset on a share-for-share basis by options which are ''in- or at-the-money,'' i.e., where the current market price of the underlying security is not more than two standard exercise price intervals below (with respect to a call option) or above (with respect to a put option) the exercise price of the option.[16] At this time, the Commission believes that it is reasonable for the NASD Regulation to adopt the codification of a longstanding industry practice.

The Commission finds good cause for approving Amendment No. 1 prior to the thirtieth day after the date of publication of notice of filing thereof. Amendment No. 1 addresses technical changes by correcting certain typographical errors appearing in the rule filing and also clarifies that the availability of good faith margin for options market-makers and specialists permitted offsets is limited to only bona fide market-making transactions. Based on the above, the Commission finds that there exists good cause consistent with Section 15A(b) of the Act, to accelerate approval of the amendment.

IV Solicitation of Comments

Interested persons are invited to submit written data, views and arguments concerning Amendment No. 1. Persons making written submissions should file six copies thereof with the Secretary, Securities and Exchange Commission, 450 Fifth Street, N.W., Washington, D.C. 20549. Copies of the submission, all subsequent amendments, all written statements with respect to the proposed rule change that are filed with the Commission, and all written communications relating to the proposed rule change between the Commission and any person, other than those that may be withheld from the public in accordance with the provisions of 5 U.S.C. 552, will be available for inspection and copying in the Commission's Public Reference Room. Copies of all such filing will also be available for inspection and copying at the principal office of the NASD Regulation. All submissions should refer to the file number SR–NASD–97–14 and should be submitted by July 7, 1997.

V. Conclusion

It is therefore ordered, pursuant to Section 19(b)(2) of the Act,[17] that the proposed rule change (SR–NASD–97–14) is approved.

For the Commission, by the Division of Market Regulation, pursuant to delegated authority.[18]

Margaret H. McFarland,

Deputy Secretary.

[FR Doc. 97–15713 Filed 6–13–97; 8:45 am]

BILLING CODE 8010–01–M

[16] The Commission approved a similar provision by the CBOE and noted the CBOE's assertion that it has received oral no-action relief from the Federal Reserve Board permitting the two standard exercise price interval interpretation. *See supra* note 11.

[17] 15 U.S.C. 78s(b)(2).

[18] 17 CFR 200.30–3(a)(12).

SMALL BUSINESS ADMINISTRATION

Capitol Health Partners, L.P. (License No. 03/03–0209); Notice of Issuance of a Small Business Investment Company License

On December 28, 1994, an application was filed by Capitol Health Partners, L.P., at 3000 P. Street, NW., Washington, DC, with the Small Business Administration (SBA) pursuant to Section 107.102 of the 1994 Regulations governing small business investment companies (13 CFR 107.300 (1997)) for a license to operate as a small business investment company.

Notice is hereby given that, pursuant to Section 301(c) of the Small Business Investment Act of 1958, as amended, after having considered the application and all other pertinent information, SBA issued License No. 03/03–0209 on May 2, 1997, to Capitol Health Partners, L.P. to operate as a small business investment company.

(Catalog of Federal Domestic Assistance Program No. 59.011, Small Business Investment Companies)

Dated: June 6, 1997.

Don A. Christensen,

Associate Administrator for Investment.

[FR Doc. 97–15628 Filed 6–13–97; 8:45 am]

BILLING CODE 8025–01–P

OFFICE OF THE UNITED STATES TRADE REPRESENTATIVE

Generalized System of Preferences (GSP); Results of the 1995 Annual GSP Product Review

AGENCY: Office of the United States Trade Representative.

ACTION: Notice of results of 1995 Annual GSP Product Review.

SUMMARY: The purpose of this notice is to announce the disposition of the petitions accepted for review in the 1995 Annual Product Review of the GSP program.

FOR FURTHER INFORMATION CONTACT: GSP Subcommittee, Office of the United States Trade Representative, 600 17th Street, N.W., Room 518, Washington, DC 20508. The telephone number is (202) 395–6971.

SUPPLEMENTARY INFORMATION:

I. Announcement of 1995 Annual GSP Product Review

This notice describes the disposition of the product petitions accepted for review in the 1995 Annual Review of the GSP program (60 FR 38856). These petitions requested changes in the articles and countries eligible for duty-free treatment under the GSP program. The GSP is provided for in the Trade Act of 1974, as amended (''Trade Act'') (19 U.S.C. 2461 *et seq.*). The review was conducted pursuant to regulations codified as 15 CFR 2007. These changes were effective May 31, 1997. The President's decisions concerning the 1995 Annual Product Review have also been reflected in Proclamation 7007 (62 FR 30415–30425) and in a June 5, 1997 USTR press release. The press release is available by contacting the USTR Public Affairs Office at (202) 395–3230 or through the USTR Fax retrieval System by telephone 202/395–4809 (Item 27004). It can also be downloaded from the USTR Home Page through the Internet at www.ustr.gov. All correspondence with respect to this notice should be addressed to the Director, Generalized System of Preferences, Room 518, 600 17th Street, N.W., Washington, DC 20508.

Frederick L. Montgomery,

Chairman, Trade Policy Staff Committee.

ANNEX IV.—1995 ANNUAL REVIEW PRODUCTS DECISIONS

Accepted products		Product	Amended HTS	Petitioner	Country
Decision	Case No.				
Add:					
Grant	95–1*	Kola Nuts, Shelled, Fresh/Dried.	0802.90.9090PT	McCormick & Co	(Cote D'Ivoire).
Grant	95–2	Unsaturated Acyclic Hydrocarbons.	2901.29.50	Sasol Alpha Olefins	(S. Africa).
Deny	95–3	''6PPD''	2921.51.50PT	Duslo; Petrimex; Prochimie; Intern'l.	(Slovak Republic).
Deny	95–4	''CBS''	2934.20.80PT	Slovak Republic; Istrochem; Prochimie.	(Slovak Republic).
Deny	95–5	Carpets/Textile Floor Coverings.	5701.10.40PT	Trade Promo. Centre/Kuber Handicrafts.	(Nepal).
Deny	95–6	Ceramic Bricks, Blocks, Tiles	6901.00.00	Ceramica Carabobo	(Venezuela).
Deny	95–7	Auto AM Radios	8527.29.80	Ford Motor Company	(Brazil).
Grant	95–8	Railway Axles	8607.19.03	Swasap	(S. Africa).
Remove:					
Deny	95–9	Cased Pencils and Crayons	9609.10.00	Writing Instrument Manuf. Assoc.	(All).
Remove Country:					
Deny	95–10	Peppers, Sweet, Canned	2001.90.39PT	Cherokee Products Co	(Chile).
Deny	95–11	Peppers, Sweet, Pickled	2005.90.5510	Cherokee Products Co	(Chile).
Deny	95–12	Manganese Dioxide	2820.10.00	Ferroalloy Association	(S. Africa).
Deny	95–13	Certain Glass Tabletops	7006.00.40	Glasscraft of Memphis, TN	(Indonesia).
Waive CNL:					
Grant	see 95–1*	Kola Nuts, Shelled, Fresh/Dried.	0802.90.9090PT	McCormick & Co	(Cote D'Ivoire).
Grant	95–14	Anchovies, Canned	1604.16.10	Ministry of Foreign Trade	(Morocco).
Grant	95–15	Anchovies, Canned	1604.16.30	Ministry of Foreign Trade	(Morocco).
Grant	95–16	Methanol	2905.11.20	Petroquimica de Venezuela	(Venezuela).
Grant	95–17	MTBE	2909.19.1010	Ecofuel	(Venezuela).
Grant	95–18	Dimethyl Terephthalate	2917.37.00	Gov. of Romania	(Romania).
Grant	95–19	Technical Herbicides	2933.39.25	American Cyanamid Co	(Brazil).
Grant	95–20	Technical Pesticides	2933.40.30	American Cyanamid Co	(Brazil).
Graduated	95–21	Methyl Esters	3823.90.40	Procter & Gamble Co	(Malaysia).
Grant	95–22	Buffalo Leather	4104.39.20	Lackawana Leather Co	(Thailand).
Grant	95–23	Leather of Animals w/o Hair	4107.90.60	Economic Minister of S. Africa.	(S. Africa).
Grant	95–24	Batting Gloves	4203.21.20	Gov. of Indonesia	(Indonesia).
Grant	95–25	Ceramic Roofing Tiles	6905.10.00	Alfareria El Volcan; Interclay Co.	(Venezuela).
Deny	95–26	Electrical Conductors/Wire	7614.90.20	Sural; Conal	(Venezuela).
Grant	95–27	Refrigeration Compressors	8414.30.40	Whilrpool Corp	(Brazil).
Grant	95–28	Automatic Typewriters	8469.12.00	Gov. of Indonesia	(Indonesia).
Graduated	95–29	Color Monitors	8471.92.32	Apple Computer, Inc	(Malaysia).
Grant	95–30A	Color Monitors With System	8471.49.26 Amended	Gov. of Thailand; Apple Computer, Inc.	(Thailand).
Grant	95–30B	Color Monitors Without System.	8471.60.35	Gov. of Thailand; Apple Computer, Inc.	(Thailand).
Graduated	95–31	Optical Scanners	8471.92.84	Apple Computer, Inc	(Malaysia).
Grant	95–32A	Telephone Sets Video	8517.19.40	Gov. of Thailand	(Thailand).
Grant	95–32B	Telephone Sets	8517.19.80	Gov. of Thailand	(Thailand).
Graduated	95–33	Facsimile Machines	8517.82.40	Hewlett-Packard Co	(Malaysia).
Deny	95–34	Facsimile Machines	8517.21.00	Cal-Comp Electronics; Canon USA; Sharp.	(Thailand).
Grant	95–35	Compact Disc Players	8519.99.00	Pioneer Technology; Santronics, Sanyo Fisher; Thomson Consume.	(Malaysia).
Graduated	95–36	Audio Cassette Recorders	8520.31.00	Gov. of Malaysia	(Malaysia).
Deny	95–37	VCRs	8521.10.60	Gov. of Thailand; Orion Sales; World Electric.	(Thailand).
Grant	95–38	Auto Tape Player Radios	8527.21.10	Ford Motor Company	(Brazil).
Graduated	95–39	Auto Tape Player Radios	8527.21.10	Sanyo Elect./Malaysia; Sanyo Fisher/USA.	(Malaysia).
Grant	95–40	Audio Hi-Fi Systems	8527.31.40	Gov. of Indonesia	(Indonesia).
Grant	95–41	Scanners and Pagers	8527.90.90	Gov. of Philippines; Uniden America; Uniden Philippines.	(Philippines).
Deny	95–42	Ignition Wiring Sets	8544.30.00	Gov. of Thailand; American Yazaki Corp.	(Thailand).
Graduated	95–43	Cameras	9006.53.00	Canon U.S.A	(Malaysia).

ANNEX IV.—1995 ANNUAL REVIEW PRODUCTS DECISIONS—Continued

Accepted products		Product	Amended HTS	Petitioner	Country
Decision	Case No.				
Deny	95–44	Photocopiers	9009.12.00	Canon U.S.A./Canon Hi-Tech Thailand.	(Thailand).
Grant	95–45	Electronic Control Units (ECU).	9032.89.60	Telefunken Microelectronic, Inc.	(Philippines).

[FR Doc. 97–15737 Filed 6–13–97; 8:45 am]

BILLING CODE 3901–01–M

DEPARTMENT OF TRANSPORTATION

Aviation Proceedings, Agreements Filed During the Week of June 6, 1997

The following Agreements were filed with the Department of Transportation under the provisions of 49 U.S.C. 412 and 414. Answers may be filed within 21 days of date of filing.

Docket Number: OST–97–2579.
Date Filed: June 2, 1997.
Parties: Members of the International Air Transport Association.
Subject: TC1 Telex Mail Vote 873, Brazil-Venezuela fares, r-1 041d r-2-051d, Intended effective date: June 20, 1997.

Docket Number: OST–96–2589.
Date Filed: June 4, 1997.
Parties: Members of the International Air Transport Association.
Subject: PTC31 S/CIRC 0020, South Pacific Expedited Reso 002e, Intended effective date: July 15, 1997.

Docket Number: OST–97–2590.
Date Filed: June 4, 1997.
Parties: Members of the International Air Transport Association.
Subject: PTC3 Telex Mail Vote 874, Korea-Bangkok/Singapore fares, Intended effective date: June 14, 1997.

Paulette V. Twine,

Chief, Documentary Services.

[FR Doc. 97–15717 Filed 6–13–97; 8:45 am]

BILLING CODE 4910–62–P

DEPARTMENT OF TRANSPORTATION

Office of the Secretary

[Order 97–6–15 ; Docket OST–96–1926]

Application of Accessair Holdings, Inc., for Certificate Authority

AGENCY: Department of Transportation.

ACTION: Notice of order to show cause.

SUMMARY: The Department of Transportation is directing all interested persons to show cause why it should not issue an order finding Accessair Holdings, Inc., fit, willing, and able, and awarding it a certificate of public convenience and necessity to engage in interstate scheduled air transportation of persons, property, and mail.

DATES: Persons wishing to file objections should do so no later than June 26, 1997.

ADDRESSES: Objections and answers to objections should be filed in Docket OST–96–1926 and addressed to the Department of Transportation Dockets (SVC–120.30, Room PL–401), U.S. Department of Transportation, 400 Seventh Street, SW., Washington, DC 20590, and should be served upon the parties listed in Attachment A to the order.

FOR FURTHER INFORMATION CONTACT: Mrs. Kathy Lusby Cooperstein, Air Carrier Fitness Division (X–56, Room 6401), U.S. Department of Transportation, 400 Seventh Street, SW., Washington, DC 20590, (202) 366–2337.

Dated: June 11, 1997

Patrick V. Murphy,

Deputy Assistant Secretary for Aviation and International Affairs.

[FR Doc. 97–15745 Filed 6–13–97; 8:45 am]

BILLING CODE 4910–62–U

DEPARTMENT OF TRANSPORTATION

Notice of Application for Certificates of Public Convenience and Necessity and Foreign Air Carrier Permits Filed Under Subpart Q During the Week Ending June 6, 1997

The following Applications for Certifications of Public Convenience and Necessity and Foreign Air Carrier Permits were filed under Subpart Q of the Department of Transportation's Procedural Regulations (See 14 CFR 302.1701 *et. seq.*). The due date for Answers, Conforming Applications, or Motions to Modify Scope are set forth below for each application. Following the Answer period DOT may process the application by expedited procedures. Such procedures may consist of the adoption of a show-cause order, a tentative order, or in appropriate cases a final order without further proceedings.

Docket Number: OST–95–477.
Date Filed: June 4, 1997.
Due Date for Answers, Conforming Applications, or Motion to Modify Scope: July 2, 1995.

Description

Amendment to Application of L.B. Limited pursuant to 49 U.S.C. 41302, and Subpart Q of the Regulations, applies for amendment and re-issuance of its Foreign Air Carrier Permit issued to it by Order 96–6–45 to engage in scheduled air transportation of persons, property and mail on the following Bahamas-U.S. scheduled combination route: Freeport on the one hand, and coterminal points Allentown, PA and Knoxville, TN on the hand.

Docket Number: OST–95–666.
Date Filed: June 4, 1997.
Due Date for Answers, Conforming Applications, or Motion to Modify Scope: July 2, 1997.

Description

Application of Sunworld International Airlines, Inc., pursuant to $9 U.S.C. Section 41102 and Subpart Q of the Regulations, applies for renewal of its certificates of public convenience and necessity to enable it to continue to engage in interstate air transportation of persons, property and mail as well as foreign air transportation of persons, property and mail between a point or points in the United States and a point or points in the Cayman Islands, via certain intermediate points. Sunworld requests that its authority be renewed for an indefinite period.

Docket Number: OST–95–667.
Date Filed: June 4, 1997.
Due Date for Answers, Conforming Applications, or Motion to Modify Scope: July 2, 1997.

Description

Application of Sunworld International Airlines, Inc., pursuant to 49 U.S.C. Section 41102 and Subpart Q of the Regulations, applies for renewal of its certificates of public convenience and necessity to enable it to continue to engage in interstate air transportation of persons, property and mail as well as foreign air transportation of persons,

property and mail between a point or points in the United States and a point or points in the Cayman Islands, via certain intermediate points. Sunworld requests that its authority be renewed for an indefinite period.

Docket Number: OST–95–676.

Date Filed: June 6, 1997.

Due Date for Answers, Conforming Applications, or Motion to Modify Scope: July 7, 1997.

Description

Application of Falcon Air Express, Inc. pursuant to 14 C.F.R. 302.4 and Subpart Q of the Department's Regulations, applies for an amendment to its certificate of public convenience and necessity to the extent necessary to lift the ''one aircraft'' limitation for domestic and international charter and sub-service transportation.

Docket Number: OST–95–677.

Date Filed: June 6, 1997.

Due Date for Answers, Conforming Applications, or Motion to Modify Scope: July 7, 1997.

Description

Application of Falcon Air Express, Inc. pursuant to 14 C.F.R. 302.4 and Subpart Q of the Department's Regulations applies for an amendment to its certificate of public convenience and necessity to the extent necessary to lift the ''one aircraft'' limitation for domestic and international charter and sub-service transportation.

Paulette V. Twine,

Chief, Documentary Services.

[FR Doc. 97–15716 Filed 6–13–97; 8:45 am]

BILLING CODE 4910–62–P

DEPARTMENT OF TRANSPORTATION

Federal Aviation Administration

Burlington International Airport, Burlington, Vermont; Noise Exposure Map Notice

AGENCY: Federal Aviation Administration, DOT.

ACTION: Notice.

SUMMARY: The Federal Aviation Administration (FAA) announces its determination that the noise exposure maps submitted by Burlington International Airport under the provisions of Title I of the Aviation Safety and Noise Abatement Act of 1979 (Public Law 96–193) and 14 CFR Part 150 are in compliance with applicable requirements.

EFFECTIVE DATE: The effective date of the FAA's determination on the noise exposure maps is June 5, 1997.

FOR FURTHER INFORMATION CONTACT: John Silva, FAA New England Region, 12 New England Executive Park, Burlington, Massachusetts 01803.

SUPPLEMENTARY INFORMATION: This notice announces that the FAA finds that the noise exposure maps submitted for Burlington International Airport are in compliance with applicable requirements of Part 150, effective June 5, 1997.

Under section 103 of the Aviation Safety and Noise Abatement Act of 1979 (hereinafter referred to as ''the Act''), an airport operator may submit to the FAA noise exposure maps which meet applicable regulations and which depict noncompatible land uses as of the date of submission of such maps, a description of projected aircraft operations, and the ways in which such operations will affect such maps. The Act requires such maps to be developed in consultation with interested and affected parties in the local community, government agencies, and persons using the airport.

An airport operator who has submitted noise exposure maps that are found by FAA to be in compliance with the Requirements of Federal Aviation Regulations (FAR) Part 150, promulgated pursuant to Title I of the Act, may submit a noise compatibility program for FAA approval which sets forth the measure the operator has taken or proposes for the reduction of existing noncompatible uses and for the prevention of the introduction of additional noncompatible uses.

The FAA has completed its review of the noise exposure maps and related descriptions submitted by Burlington International Airport. The specific maps under consideration are Figures 11.A and 11.B, Base Year (1997) Land Uses by Jurisdiction, and 12.C and 12.D, Future (2002) Year Land Uses by Jurisdiction (Declared Distance), each of which is published in ''FAR Part 150 Noise Exposure Map Update; Burlington International Airport'', dated May 23, 1997. FAA has determined that these maps for Burlington International Airport are in compliance with applicable requirements. This determination is effective on June 5, 1997. FAA's determination on an airport operator's noise exposure maps is limited to a finding that the maps were developed in accordance with the procedures contained in Appendix A of FAR Part 150. Such determination does not constitute approval of the applicant's data, information or plans, or a commitment to approve a noise compatibility program or to fund the implementation of that program. If questions arise concerning the precise relationship of specific properties to noise exposure contours depicted on a noise exposure map submitted under section 103 of the Act, it should be noted that the FAA is not involved in any way in determining the relative locations of specific properties with regard to the depicted noise contours, or in interpreting the noise exposure maps to resolve questions concerning, for example, which properties should be covered by the provisions of section 107 of the Act. These functions are inseparable from the ultimate land use control and planning responsibilities of local government. These local responsibilities are not changed in any way under Part 150 or through FAA's review of noise exposure maps. Therefore, the responsibility for the detailed overlaying of noise exposure contours onto the map depicting properties on the surface rests exclusively with the airport operator which submitted those maps, or with those public agencies and planning agencies with which consultation is required under section 103 of the Act. The FAA has relied on the certification by the airport operator, under section 150.21 of FAR Part 150, that the statutorily required consultation has been accomplished.

Copies of the noise exposure maps and of the FAA's evaluation of the maps are available for examination at the following locations:

Federal Aviation Administration, New England Region, Airports Division, 16 New England Executive Park, Burlington, Massachusetts 01803

Burlington International Airport, 1200 Airport Drive #1, South Burlington, Vermont 05403.

Questions may be directed to the individual named above under the heading **FOR FURTHER INFORMATION CONTACT.**

Issued in Burlington, Massachusetts, June 5, 1997.

Vincent A. Scarano,

Manager, Airports Division, New England Region.

[FR Doc. 97–15692 Filed 6–13–97; 8:45 am]

BILLING CODE 4910–13–M

DEPARTMENT OF TRANSPORTATION

National Highway Traffic Safety Administration

[Docket No. 91–53; Notice 06]

Insurer Reporting Requirements; Reports on Section 612 of the Motor Vehicle Theft Law Enforcement Act of 1984

AGENCY: National Highway Traffic Safety Administration (NHTSA), Department of Transportation.

ACTION: Notice of availability.

SUMMARY: This notice announces publication by NHTSA of three reports. Section 612(b) of Title VI of the Motor Vehicle Information and Cost Savings Act (MVICSA, Pub. L. 93–513) requires this information be periodically compiled and published by the agency in a form that will be helpful to the public, the law enforcement community, and Congress. The three reports are for reporting years 1989, 1990 and 1991. These reports cover Section 612 which provides information on theft and recovery of vehicles; rating rules and plans used by motor vehicle insurers to reduce premiums due to a reduction in motor vehicle thefts; and actions taken by insurers to assist in deterring thefts.

ADDRESSES: Interested persons may obtain a copy of the Section 612 informational report by contacting the Docket Section, Room 5109, National Highway Traffic Safety Administration, 400 Seventh Street, S.W., Washington, DC 20590. Docket hours are from 9:30 a.m. to 4:00 p.m, Monday through Friday. Requests should refer to Docket No. 91–53; Notice 06.

FOR FURTHER INFORMATION: Ms. Rosalind Proctor, Office of Planning and Consumer Programs, NHTSA, 400 Seventh Street, S.W., Washington, DC 20590. Ms. Proctor's telephone number is (202) 366–0846. Her fax number is (202) 493–2739.

SUPPLEMENTARY INFORMATION: The Motor Vehicle Theft Law Enforcement Act of 1984 (Theft Act) was implemented to enhance detection and prosecution of motor vehicle theft (Pub. L. 98–547). The Theft Act added a new Title VI to the Motor Vehicle Information and Cost Savings Act, which required the Secretary of Transportation to issue a theft prevention standard for identifying major parts of certain high-theft lines of passenger cars. The Act also addressed several other actions to reduce motor vehicle theft, such as: increased criminal penalties for those who traffic in stolen vehicles and parts; curtailment of the exportation of stolen motor vehicles and off-highway mobile equipment; establishment of penalties for dismantling vehicles for the purpose of trafficking in stolen parts; and development of ways to encourage decreases in premiums charged to consumers for motor vehicle theft insurance.

Title VI was designed to impede the theft of motor vehicles by creating a theft prevention standard which required manufacturers of designated high-theft car lines to mark or inscribe them with a vehicle identification number. The theft standard became effective in Model Year 1987 for designated high-theft car lines.

The ''Anti-Car Theft Act of 1992'' amended the law relating to the parts-marking of major component parts on designated high-theft vehicles. One amendment made by the Anti-Car Theft Act was to 49 U.S.C. 33101(10), where the definition of ''passenger motor vehicle'' now includes a ''multipurpose passenger vehicle or light-duty truck when that vehicle or truck is rated at not more than 6,000 pounds gross vehicle weight.'' Since ''passenger motor vehicle'' was previously defined to include passenger cars only, the effect of the Anti-Car Theft Act is that certain multipurpose passenger vehicle (MPV) and light-duty truck (LDT) lines may be determined to be high-theft vehicles subject to the Federal motor vehicle theft prevention standard (49 CFR Part 541).

Section 612 of the Theft Act requires subject insurers or designated agents to report annually to the agency on theft and recovery of vehicles; rating rules and plans used by insurers to reduce premiums due to a reduction in motor vehicle thefts; and actions taken by insurers to assist in deterring thefts. Rental and leasing companies also are required to provide annual theft reports to the agency.

The annual insurer reports provided under Section 612 of the Theft Act are intended to aid in implementing the Theft Act and fulfilling the Department's requirements to report to the public the results of the insurer reports. The first annual insurer reports, referred to as the Section 612 Report on Motor Vehicle Theft, was prepared by the agency and issued in December 1987. A notice announcing the availability of the first report was published in the **Federal Register** on February 19, 1988. The report included theft and recovery data by vehicle type, make, line, and model which were tabulated by insurance companies and, rental and leasing companies. Comprehensive premium information for each of the reporting insurance companies was also included. The fifth, sixth and seventh reports disclose the same subject information and follow the same reporting format.

Issued on: June 9, 1997.

L. Robert Shelton,

Associate Administrator for Safety Performance Standards.

[FR Doc. 97–15710 Filed 6–13–97; 8:45 am]

BILLING CODE 4910–59–P

DEPARTMENT OF TRANSPORTATION

National Highway Traffic Safety Administration

[Docket No. 97–037; Notice 1]

Fleetwood Enterprises, Inc.; Receipt of Application for Decision of Inconsequential Noncompliance

Fleetwood Enterprises, Inc. (Fleetwood) of Riverside, California has determined that front side windows of some of the motor homes it manufactured fail to comply with the light transmittance requirements of 49 CFR 571.205, Federal Motor Vehicle Safety Standard (FMVSS) No. 205, ''Glazing Materials,'' and has filed an appropriate report pursuant to 49 CFR Part 573, ''Defect and Noncompliance Reports.'' Fleetwood has also applied to be exempted from the notification and remedy requirements of 49 U.S.C. Chapter 301—''Motor Vehicle Safety'' on the basis that the noncompliance is inconsequential to motor vehicle safety.

This notice of receipt of an application is published under 49 U.S.C. 30118 and 30120 and does not represent any agency decision or other exercise of judgment concerning the merits of the application.

Standard No. 205, which incorporates by reference, the American National Standards Institute's (ANSI) ''Safety Code for Safety Glazing Materials for Glazing Motor Vehicles Operating on Land Highways'' Z–26.1–1977, January 26, 1977, as supplemented by Z26.1a, July 3, 1980 (ANS Z26.1), specifies that glazing materials used in windshields and in windows to the immediate right and left of the driver of trucks and buses shall have a luminous transmittance of not less than 70 percent of the light, at normal incidence, when measured in accordance with ''Light Transmittance, Test 2'' of ANSI Z–26.1–1980. It specifies that all windows of an automobile shall have a luminous transmittance of not less than 70 percent.

During the period of July, 1995 through January, 1997, Fleetwood

manufactured approximately 1,438 1996 and 1997 model year Flair brand motor homes having front side windows with a luminous transmittance of 62 percent and approximately 188 Bounder brand motor homes and 733 Discovery brand motor homes, also of model years 1996 and 1997, having double panes of the same glazing in the front side windows. Fleetwood reported a luminous transmittance of 41 percent for the dual pane application. Beginning with vehicle production in January, 1997, front side windows with a luminous transmittance of greater than 70 percent have been installed in all Fleetwood motor homes.

Fleetwood supports its application for inconsequential noncompliance with the following:

Fleetwood considered a Ford Motor Company inconsequentiality petition that references computer modeling studies and in-car evaluations conducted by Ford Motor Company that were used in their petition dated February 6, 1995 which showed a 5 point reduction in the percentage of light transmission, from 65 to 60 percent, resulted in a reduction of seeing distance of only 1 to 2 percent during night time driving, and little or no reduction in seeing distance during dusk and daytime driving. Based on these studies, the subject Flair brand motor home driver and passenger side windows with 62 percent light transmittance would be expected to result in no significant reduction in seeing distance during night time driving and virtually no reduction during dusk and daytime driving, compared to glass with a 70 percent transmittance. Reductions in seeing distances of 1 percent or less have no practical or perceivable effect on driver visibility based on observer's reports in vehicle evaluations by Ford of windshields with line-of-sight transmittance in the 60 to 65 percent range. The subject Bounder and Discovery brand motor home driver and passenger side windows with 41 percent light transmittance would be expected to result in no significant reduction in seeing distances during night time driving, and little to no reduction in seeing distance during dusk and daytime driving.

Fleetwood also considered that the stated purpose of FMVSS No. 205 to which the light transmittance requirements are directed is ''to ensure a necessary degree of transparency in motor vehicle windows for driver visibility.'' NHTSA, in its March, 1991 ''Report to Congress on Tinting of Motor Vehicle Windows'', concluded that the light transmittance of windows of the then new passenger cars and vans that complied with Standard No. 205 did not present an unreasonable risk of accident occurrence. The new passenger cars and vans that were considered to not present an unreasonable risk had effective line-of-sight light transmittances through the windshields as low as approximately 63 percent on passenger car windshields and 55 percent on van windshields (as determined by a 1990 agency survey, the results of which were included in the Report to Congress). Fleetwood feels that while light transmittance and driver visibility through front side windows is important to the safe operation of motor homes, it is not as important as driver visibility through motor home windshields. Therefore, while the use of front side window glazing with luminous transmittance less than 70 percent is technically a non-compliance, we believe the condition presents no risk to motor vehicle safety.

Fleetwood's opinion that this non-compliance is not safety related is also based upon the consideration of the great amount of visibility that is inherent in the driver packaging of the subject motor homes. Factors which contribute to this visibility are:

1. The windshield glass is approximately 100 inches wide by 36 inches tall.
2. The windshield glass is installed at an incidence angle of 4 degrees back from vertical.
3. The involved side window glass on the Flair and Bounder brand motor homes is approximately 46 inches long by 31 inches tall. The involved side window glass on the Discovery brand motor home is approximately 52 inches long by 34 inches tall.
4. The involved side window glass is flat and is installed perpendicular to the ground.
5. The driver' s seat H point ranges from approximately 50 to 62 inches from the ground.
6. The involved windows have a slider feature which allows them to be positioned out of line of sight (if desired), and
7. Side window visibility is primarily key in sharp turning maneuvers which are typically performed at low speeds.

Interested persons are invited to submit written data, views, and arguments on the application of Fleetwood, described above. Comments should refer to the docket number and be submitted to: Docket Section, National Highway Traffic Safety Administration, Room 5109, 400 Seventh Street, SW., Washington, DC 20590. It is requested but not required that six copies be submitted. All comments received before the close of business on the closing date indicated below will be considered. The application and supporting materials, and all comments received after the closing date will also be filed and will be considered to the extent possible. When the application is granted or denied, the notice will be published in the **Federal Register** pursuant to the authority indicated below.

Comment closing date: (July 16, 1997).

(15 U.S.C. 1417; delegations of authority at 49 CFR 1.50 and 501.8)

Issued on: June 10, 1997.

L. Robert Shelton,

Associate Administrator for Safety Performance Standards.

[FR Doc. 97–15709 Filed 6–13–97; 8:45 am]

BILLING CODE 4910–59–P

DEPARTMENT OF TRANSPORTATION

Surface Transportation Board

[STB Docket No. AB–290 (Sub–No. 189X)]

Norfolk and Western Railway Company—Abandonment Exemption—in McDowell County, WV

Norfolk and Western Railway Company (NW) has filed a notice of exemption under 49 CFR 1152 Subpart F—*Exempt Abandonments* to abandon a 1.0-mile line of railroad between milepost NF–0.0 at Norfolk, and milepost NF–1.0 at Buzzards Creek Junction, WV. The line traverses United States Postal Service Zip Code 24868.

NW has certified that: (1) No local traffic has moved over the line for at least 2 years; (2) there is no overhead traffic moving over the line; (3) no formal complaint filed by a user of rail service on the line (or by a state or local government entity acting on behalf of such user) regarding cessation of service over the line either is pending with the Surface Transportation Board (Board) or with any U.S. District Court or has been decided in favor of complainant within the 2-year period; and (4) the requirements at 49 CFR 1105.7 (environmental reports), 49 CFR 1105.8 (historic reports), 49 CFR 1105.11 (transmittal letter), 49 CFR 1105.12 (newspaper publication), and 49 CFR 1152.50(d)(1) (notice to governmental agencies) have been met.

As a condition to this exemption, any employee adversely affected by the abandonment shall be protected under *Oregon Short Line R. Co.—Abandonment—Goshen*, 360 I.C.C. 91 (1979). To address whether this condition adequately protects affected employees, a petition for partial

revocation under 49 U.S.C. 10502(d) must be filed.

Provided no formal expression of intent to file an offer of financial assistance (OFA) has been received, this exemption will be effective on July 16, 1997, unless stayed pending reconsideration. Petitions to stay that do not involve environmental issues,[1] formal expressions of intent to file an OFA under 49 CFR 1152.27(c)(2),[2] and trail use/rail banking requests under 49 CFR 1152.29[3] must be filed by June 26, 1997. Petitions to reopen or requests for public use conditions under 49 CFR 1152.28 must be filed by July 7, 1997, with: Surface Transportation Board, Office of the Secretary, Case Control Unit, 1925 K Street, NW., Washington, DC 20423.

A copy of any petition filed with the Board should be sent to applicant's representative: James R. Paschall, General Attorney, Norfolk Southern Corporation, Three Commercial Place, Norfolk, VA 23510.

If the verified notice contains false or misleading information, the exemption is void *ab initio.*

NW has filed an environmental report which addresses the abandonment's effects, if any, on the environment and historic resources. The Section of Environmental Analysis (SEA) will issue an environmental assessment (EA) by June 20, 1997. Interested persons may obtain a copy of the EA by writing to SEA (Room 500, Surface Transportation Board, Washington, DC 20423) or by calling SEA, at (202) 565–1545. Comments on environmental and historic preservation matters must be filed within 15 days after the EA becomes available to the public.

Environmental, historic preservation, public use, or trail use/rail banking conditions will be imposed, where appropriate, in a subsequent decision.

Pursuant to the provisions of 49 CFR 1152.29(e)(2), NW shall file a notice of consummation with the Board to signify that it has exercised the authority granted and fully abandoned the line. If consummation has not been effected by NW's filing of a notice of consummation by June 16, 1998, and there are no legal or regulatory barriers to consummation, the authority to abandon will automatically expire.

Decided: June 9, 1997.

By the Board, David M. Konschnik, Director, Office of Proceedings.

Vernon A. Williams,

Secretary.

[FR Doc. 97–15712 Filed 6–13–97; 8:45 am]

BILLING CODE 4915–00–P

[1] The Board will grant a stay if an informed decision on environmental issues (whether raised by a party or by the Board's Section of Environmental Analysis in its independent investigation) cannot be made before the exemption's effective date. *See Exemption of Out-of-Service Rail Lines,* 5 I.C.C.2d 377 (1989). Any request for a stay should be filed as soon as possible so that the Board may take appropriate action before the exemption's effective date.

[2] Each offer of financial assistance must be accompanied by the filing fee, which currently is set at $900. *See* 49 CFR 1002.2(f)(25).

[3] The Board will accept late-filed trail use requests as long as the abandonment has not been consummated and the abandoning railroad is willing to negotiate an agreement.

DEPARTMENT OF THE TREASURY

[Treasury Directive Number 16–22]

Withdrawals From Trust and Deposit Fund Accounts; Authority Delegation

Dated: June 5, 1997.

1. *Delegation.* By virtue of the authority granted to the Fiscal Assistant Secretary by Treasury Order (TO) 101–05, the Commissioner, Bureau of the Public Debt, is delegated the authority to approve schedules for withdrawals from all trust and deposit fund accounts administered by the Bureau of the Public Debt for the Secretary of the Treasury.

2. *Redelegation.* The Commissioner, Bureau of the Public Debt, may redelegate this authority in writing to officials of the Bureau of the Public Debt, and it may be exercised in the individual capacity and under the individual title of each official receiving such authority.

3. *Authorities.* TO 101–05, ''Reporting Relationships and Supervision of Officials, Offices and Bureaus, Delegation of Certain Authority, and Order of Succession in the Department of the Treasury.''

4. *Cancellation.* Treasury Directive 16–22, ''Withdrawals from Trust and Deposit Fund Accounts,'' dated October 22, 1992, is superseded.

5. *Expiration Date.* This Directive expires three years after the date of issuance unless superseded or cancelled by that date.

6. *Office of Primary Interest.* Division of Accounting Operations, Office of Public Debt Accounting, Bureau of the Public Debt.

Gerald Murphy,

Fiscal Assistant Secretary.

[FR Doc. 97–15708 Filed 6–13–97; 8:45 am]

BILLING CODE 4810–25–P

DEPARTMENT OF THE TREASURY

[General Counsel Designation No. 232]

Appointment of Members to the Legal Division Performance Review Board

Under the authority granted to me as General Counsel of the Department of the Treasury by 31 U.S.C. 301 and 26 U.S.C. 7801, Treasury Department Order No. 101–5 (Revised), and pursuant to the Civil Service Reform Act, I hereby appoint the following persons to the Legal Division Performance Review Board:

(1) For the General Counsel Panel—

Neal S. Wolin, Deputy General Counsel, who shall serve as Chairperson;
Russell L. Munk, Assistant General Counsel (International Affairs);
Stephen J. McHale, Chief Counsel, Bureau of Alcohol, Tobacco & Firearms;
Robert M. McNamara, Jr., Assistant General Counsel (Enforcement);
Kenneth R. Schmalzbach, Assistant General Counsel (General Law and Ethics); and
Elizabeth B. Anderson, Chief Counsel, United States Customs Service.

(2) For the Internal Revenue Service Panel—

Chairperson, Deputy Chief Counsel, IRS;
Deputy General Counsel;
Two Associate Chief Counsel, IRS; and
Two Regional Counsel, IRS.

I hereby delegate to the Chief Counsel of the Internal Revenue Service the authority to make the appointments to the IRS Panel specified in this Designation and to make the publication of the IRS Panel as required by 5 U.S.C. 4314(c)(4).

Dated: June 9, 1997.

Edward S. Knight,

General Counsel.

[FR Doc. 97–15707 Filed 6–13–97; 8:45 am]

BILLING CODE 4810–25–M

DEPARTMENT OF THE TREASURY

Internal Revenue Service

Proposed Collection; Comment Request for Form 23

AGENCY: Internal Revenue Service (IRS), Treasury.

ACTION: Notice and request for comments.

SUMMARY: The Department of the Treasury, as part of its continuing effort to reduce paperwork and respondent burden, invites the general public and other Federal agencies to take this opportunity to comment on proposed

and/or continuing information collections, as required by the Paperwork Reduction Act of 1995, Public Law 104–13 (44 U.S.C. 3506(c)(2)(A)). Currently, the IRS is soliciting comments concerning Form 23, Application for Enrollment to Practice Before the Internal Revenue Service.

DATES: Written comments should be received on or before August 15, 1997 to be assured of consideration.

ADDRESSES: Direct all written comments to Garrick R. Shear, Internal Revenue Service, room 5571, 1111 Constitution Avenue NW., Washington, DC 20224.

FOR FURTHER INFORMATION CONTACT: Requests for additional information or copies of the information collection should be directed to Carol Savage, (202) 622–3945, Internal Revenue Service, room 5569, 1111 Constitution Avenue NW., Washington, DC 20224.

SUPPLEMENTARY INFORMATION:

Title: Application for Enrollment to Practice Before the Internal Revenue Service.

OMB Number: 1545–0950.

Form Number: Form 23.

Abstract: Form 23 must be completed by those who desire to be enrolled to practice before the Internal Revenue Service. The information on the form will be used by the Director of Practice to determine the qualifications and eligibility of applicants for enrollment.

Current Actions: A space for the spouse's name was added under item 6 of Form 23 because we frequently need to request information under the spouse's name and it is difficult when the name is different from the applicant's.

Type of Review: Revision of a currently approved collection.

Affected Public: Individuals and the Federal government.

Estimated Number of Respondents: 2,400.

Estimated Time Per Respondent: 1 hour.

Estimated Total Annual Burden Hours: 2,400.

The following paragraph applies to all of the collections of information covered by this notice:

An agency may not conduct or sponsor, and a person is not required to respond to, a collection of information unless the collection of information displays a valid OMB control number. Books or records relating to a collection of information must be retained as long as their contents may become material in the administration of any internal revenue law. Generally, tax returns and tax return information are confidential, as required by 26 U.S.C. 6103.

Request for Comments

Comments submitted in response to this notice will be summarized and/or included in the request for OMB approval. All comments will become a matter of public record. Comments are invited on: (a) Whether the collection of information is necessary for the proper performance of the functions of the agency, including whether the information shall have practical utility; (b) the accuracy of the agency's estimate of the burden of the collection of information; (c) ways to enhance the quality, utility, and clarity of the information to be collected; (d) ways to minimize the burden of the collection of information on respondents, including through the use of automated collection techniques or other forms of information technology; and (e) estimates of capital or start-up costs and costs of operation, maintenance, and purchase of services to provide information.

Approved: June 10, 1997.

Garrick R. Shear,

IRS Reports Clearance Officer.

[FR Doc. 97–15629 Filed 6–13–97; 8:452 am]

BILLING CODE 4830–01–U

DEPARTMENT OF THE TREASURY

Internal Revenue Service

Proposed Collection; Comment Request for Form 5558

AGENCY: Internal Revenue Service (IRS), Treasury.

ACTION: Notice and request for comments.

SUMMARY: The Department of the Treasury, as part of its continuing effort to reduce paperwork and respondent burden, invites the general public and other Federal agencies to take this opportunity to comment on proposed and/or continuing information collections, as required by the Paperwork Reduction Act of 1995, Public Law 104–13 (44 U.S.C. 3506(c)(2)(A)). Currently, the IRS is soliciting comments concerning Form 5558, Application for Extension of Time To File Certain Employee Plan Returns.

DATES: Written comments should be received on or before August 15, 1997 to be assured of consideration.

ADDRESSES: Direct all written comments to Garrick R. Shear, Internal Revenue Service, room 5571, 1111 Constitution Avenue NW., Washington, DC 20224.

FOR FURTHER INFORMATION CONTACT: Requests for additional information or copies of the form and instructions should be directed to Martha R. Brinson, (202) 622–3869, Internal Revenue Service, room 5571, 1111 Constitution Avenue NW., Washington, DC 20224.

SUPPLEMENTARY INFORMATION:

Title: Application for Extension of Time To File Certain Employee Plan Returns.

OMB Number: 1545–0212

Form Number: 5558

Abstract: This form is used by employers to request an extension of time to file the employee plan annual information return/report (Form 5500 series) or the employee plan excise tax return (Form 5330). The data supplied on Form 5558 is used to determine if such extension of time is warranted.

Current Actions:

(1) The ''Extend Date'' column has been added to line 2. This will allow preparers to indicate the date they need for their extension. New line 3 was added for preparers to enter the reason why an extension is needed. This information was previously requested as an attachment to the form.

(2) Lines 1b, 1c, 2, 3a, 3b, 5a, 5b, and 6 were eliminated because the information is no longer needed.

Type of Review: Revision of a currently approved collection.

Affected Public: Business or other for-profit organizations and not-for-profit institutions.

Estimated Number of Respondents: 305,000.

Estimated Time Per Respondent: 27 min.

Estimated Total Annual Burden Hours: 138,795.

The following paragraph applies to all of the collections of information covered by this notice:

An agency may not conduct or sponsor, and a person is not required to respond to, a collection of information unless the collection of information displays a valid OMB control number. Books or records relating to a collection of information must be retained as long as their contents may become material in the administration of any internal revenue law. Generally, tax returns and tax return information are confidential, as required by 26 U.S.C. 6103.

Request for Comments

Comments submitted in response to this notice will be summarized and/or included in the request for OMB approval. All comments will become a matter of public record. Comments are invited on: (a) Whether the collection of information is necessary for the proper performance of the functions of the agency, including whether the information shall have practical utility; (b) the accuracy of the agency's estimate

of the burden of the collection of information; (c) ways to enhance the quality, utility, and clarity of the information to be collected; (d) ways to minimize the burden of the collection of information on respondents, including through the use of automated collection techniques or other forms of information technology; and (e) estimates of capital or start-up costs and costs of operation, maintenance, and purchase of services to provide information.

Approved: June 3, 1997.

Garrick R. Shear,

IRS Reports Clearance Officer.

[FR Doc. 97–15630 Filed 6–13–97; 8:45 am]

BILLING CODE 4830–01–U

DEPARTMENT OF THE TREASURY

Internal Revenue Service

Proposed Collection; Comment Request for Form 1040 and Schedules A, B, C, C–EZ, D, E, EIC, F, H, R and SE

AGENCY: Internal Revenue Service (IRS), Treasury.

ACTION: Notice and request for comments.

SUMMARY: The Department of the Treasury, as part of its continuing effort to reduce paperwork and respondent burden, invites the general public and other Federal agencies to take this opportunity to comment on proposed and/or continuing information collections, as required by the Paperwork Reduction Act of 1995, Public Law 104–13 (44 U.S.C. 3506(c)(2)(A)). Currently, the IRS is soliciting comments concerning Form 1040 and Schedules A, B, C, C–EZ, D, E, EIC, F, H, R, and SE, U.S. Individual Income Tax Return.

DATES: Written comments should be received on or before August 15, 1997 to be assured of consideration.

ADDRESSES: Direct all written comments to Garrick R. Shear, Internal Revenue Service, room 5571, 1111 Constitution Avenue NW., Washington, DC 20224.

FOR FURTHER INFORMATION CONTACT: Requests for additional information or copies of the form and instructions should be directed to Martha R. Brinson, (202) 622–3869, Internal Revenue Service, room 5571, 1111 Constitution Avenue NW., Washington, DC 20224.

SUPPLEMENTARY INFORMATION:

Title: U.S. Individual Income Tax Return

OMB Number: 1545–0074

Form Number: 1040 and Schedules A, B, C, C–EZ, D, E, EIC, F, H, R, and SE

Abstract: These forms are used by individuals to report their income tax liability. The data is used to verify that the items reported on the forms are correct, and also for general statistical use.

Current Actions:

Changes to Form 1040

(1) Lines 23 a and b were combined to reduce taxpayer burden. The new spousal IRA rules permit the maximum contribution for each spouse, so it is no longer necessary to know how much was contributed to each. As a result, line 23b was deleted. Also, the IRA worksheets in the instructions were substantially shortened and simplified.

(2) New line 24 was added for the medical savings account deduction. This line was added to implement Internal Revenue Code section 220(a).

(3) The text on line 28 was revised to reflect that the deduction for a SIMPLE plan maintained by a self-employed person will be entered on this line. Therefore, the checkbox for line 28 (old line 27) was deleted because it is no longer needed.

(4) New line 42 was added for taxpayers to take the adoption credit.

Type of Review: Revision of a currently approved collection.

Affected Public: Individuals or households

Estimated Number of Respondents: 59,384,249

Estimated Time Per Respondent: Varies

Estimated Total Annual Burden Hours: 1,107,975,034

The following paragraph applies to all of the collections of information covered by this notice:

An agency may not conduct or sponsor, and a person is not required to respond to, a collection of information unless the collection of information displays a valid OMB control number. Books or records relating to a collection of information must be retained as long as their contents may become material in the administration of any internal revenue law. Generally, tax returns and tax return information are confidential, as required by 26 U.S.C. 6103.

Request for Comments

Comments submitted in response to this notice will be summarized and/or included in the request for OMB approval. All comments will become a matter of public record. Comments are invited on: (a) Whether the collection of information is necessary for the proper performance of the functions of the agency, including whether the information shall have practical utility; (b) the accuracy of the agency's estimate of the burden of the collection of information; (c) ways to enhance the quality, utility, and clarity of the information to be collected; (d) ways to minimize the burden of the collection of information on respondents, including through the use of automated collection techniques or other forms of information technology; and (e) estimates of capital or start-up costs and costs of operation, maintenance, and purchase of services to provide information.

Approved: June 9, 1997.

Garrick R. Shear,

IRS Reports Clearance Officer.

[FR Doc. 97–15631 Filed 6–13–97; 8:45 am]

BILLING CODE 4830–01–U

DEPARTMENT OF THE TREASURY

Office of Thrift Supervision

Proposed Agency Information Collection Activities; Comment Request

AGENCY: Office of Thrift Supervision, Department of Treasury.

ACTION: Notice and request for comments.

SUMMARY: The Department of the Treasury, as part of its continuing effort to reduce paperwork and respondent burden, invites the general public and other Federal agencies to take this opportunity to comment on proposed and/or continuing information collections, as required by the Paperwork Reduction Act of 1995, Public Law 104–13. Currently, the Office of Thrift Supervision within the Department of the Treasury is soliciting comments concerning the information collection entitled ''Operating Subsidiaries.''

DATES: Written comments should be received on or before August 15, 1997 to be assured of consideration.

ADDRESSES: Send comments to Manager, Dissemination Branch, Records Management and Information Policy, Office of Thrift Supervision, 1700 G Street, NW., Washington, DC 20552, Attention 1550–0077. These submissions may be hand delivered to 1700 G Street, NW. from 9:00 a.m. to 5:00 p.m. on business days, they may be sent by facsimile transmission to FAX Number (202) 906–7755, or they may be sent by e-mail: public.info@ots.treas.gov. Those commenting by e-mail should include their name and telephone number. Comments over 25 pages in length should be sent to FAX Number (202) 906–6956. Comments will be available for inspection at 1700 G Street, NW.,

from 9:00 A.M. until 4:00 P.M. on business days.

Copies of the Form with instructions are available for inspection at 1700 G Street, NW., from 9:00 A.M. until 4:00 P.M. on business days or from PubliFax, OTS'' Fax-on-Demand system, at (202) 906–5660.

FOR FURTHER INFORMATION CONTACT: Requests for additional information should be directed to Pamela Schaar, Corporate Activities Division, Supervision, Office of Thrift Supervision, 1700 G Street, NW., Washington, DC 20552, (202) 906–7205.

SUPPLEMENTARY INFORMATION:

Title: Operating Subsidiaries.

OMB Number: 1550–0077.

Form Number: OTS Form 1577.

Abstract: Thrift institutions proposing to establish or acquire an operating subsidiary or conduct new activities in an existing operating subsidiary are required to either notify OTS or obtain OTS approval.

Current Actions: OTS is proposing to renew this information collection without revision.

Type of Review: Extension of an already approved information collection.

Affected Public: Business or For Profit.

Estimated Number of Respondents: 154.

Estimated Time Per Respondent: 10 hours.

Estimated Total Annual Burden Hours: 1,540 hours.

Request for Comments

Comments submitted in response to this notice will be summarized and/or included in the request for OMB approval. All comments will become a matter of public record. Comments are invited on: (a) Whether the collection of information is necessary for the proper performance of the functions of the agency, including whether the information shall have practical utility; (b) the accuracy of the agency's estimate of the burden of the collection of information; (c) ways to enhance the quality; (d) ways to minimize the burden of the collection of information on respondents, including the use of automated collection techniques or other forms of information technology, and (e) estimates of capital or start-up costs and costs of operation, maintenance, and purchase of services to provide information.

Dated: June 10, 1997.

Catherine C. M. Teti,

Director, Records Management and Information Policy.

[FR Doc. 97–15662 Filed 6–13–97; 8:45 am]

BILLING CODE 6720–01–P

UTAH RECLAMATION MITIGATION AND CONSERVATION COMMISSION

Notice of Availability

AGENCY: Utah Reclamation Mitigation and Conservation Commission.

ACTION: Notice.

SUMMARY: The Utah Reclamation Mitigation and Conservation Commission adopted its 1997 Update to the Mitigation and Conservation Plan. The Plan is intended to be a dynamic document that is updated annually in order to reflect our most current thinking and priorities. The Plan will guide the Commission's fish and wildlife mitigation and conservation program for impacts associated with the construction of the Central Utah Project and other Federal reclamation projects in Utah.

DATES: The 1997 update was adopted May 19, 1997.

ADDRESSES: A copy of the 1997 Update to the Mitigation and Conservation Plan is available from the Planning Manager, Utah Reclamation Mitigation and Conservation Commission, 102 W. 500 S., Suite 315, Salt Lake City, Utah 84101.

FOR FURTHER INFORMATION CONTACT: Ms. Joan Degiorgio, Telephone (801) 524–3146; Fax (801) 524–3148, E-mail Jdegiorgio@uc.usbr.gov.

Authority: Pub. L. 102–575, 106 Stat. 4600, 4625, October 30, 1992.

Michael C. Weland,

Executive Director.

[FR Doc. 97–15676 Filed 6–13–97; 8:45 am]

BILLING CODE 4310–05–P

Corrections

Federal Register

Vol. 62, No. 115

Monday, June 16, 1997

This section of the FEDERAL REGISTER contains editorial corrections of previously published Presidential, Rule, Proposed Rule, and Notice documents. These corrections are prepared by the Office of the Federal Register. Agency prepared corrections are issued as signed documents and appear in the appropriate document categories elsewhere in the issue.

DEPARTMENT OF ENERGY

Energy Information Administration

Agency Information Collection, Activities: Proposed Collection; Comment Request

Correction

In notice document 97–14712, beginning on page 30846, in the issue of Thursday, June 5, 1997, make the following correction:

On page 30846, in the second column, under the **DATES** section, in the second line, ''July 7, 1997'' should read ''August 4, 1997''.

DEPARTMENT OF JUSTICE

Drug Enforcement Administration

[Docket No. 96–21]

Ellis Turk, M.D.; Denial of Application

Correction

In notice document 97–10371, beginning on page 19603, in the issue of Tuesday, April 22, 1997, make the following correction:

On page 19605, in the second column, in the 15th line from the bottom, ''controverted'' should read ''uncontroverted''.

BILLING CODE 1505-01-D

NUCLEAR REGULATORY COMMISSION

10 CFR Parts 170 and 171

RIN 3150-AF 55

Revision of Fee Schedules; 100% Fee Recovery, FY 1997

Correction

In rule document 97–13777, beginning on page 29194, in the issue of Thursday, May 29, 1997 make the following corrections:

(1) On page 29201, in ''Table I -- Calculation of the Percentage Change to the FY 1996 Annual Fees'', under the heading ''FY96'', the sixth entry ''[1]6.01'' should read ''[1]6.0''.

(2) On page 29216, in ''Schedule of Materials Annual Fees and Fees for Government Agencies Licensed by NRC'', under the heading ''Annual fees'', the ninth entry ''[6]283,000'' should read ''283,000''.

BILLING CODE 1505-01-D

SECURITIES AND EXCHANGE COMMISSION

[Release No. 34-38616; File No. SR-PCX-97-09]

Self Regulatory Organizations; Notice of Filing of Proposed Rule Change by the Pacific Exchange, Inc., Relating to the Elimination of Position and Exercise Limits for FLEX Equity Options

Correction

In notice document 97–13097, beginning on page 27642, in the issue of Tuesday, May 20, 1997, make the following correction:

On page 27642, in the second column, the first document, the Release No. should be as set forth above.

BILLING CODE 1505-01-D

Reader Aids

Federal Register

Vol. 62, No. 115

Monday, June 16, 1997

CUSTOMER SERVICE AND INFORMATION

Federal Register/Code of Federal Regulations

General Information, indexes and other finding aids **202–523–5227**

Laws

For additional information **523–5227**

Presidential Documents

Executive orders and proclamations **523–5227**

The United States Government Manual **523–5227**

Other Services

Electronic and on-line services (voice) **523–4534**

Privacy Act Compilation **523–3187**

TDD for the hearing impaired **523–5229**

ELECTRONIC BULLETIN BOARD

Free **Electronic Bulletin Board** service for Public Law numbers, Federal Register finding aids, and list of documents on public inspection. **202–275–0920**

FAX-ON-DEMAND

You may access our Fax-On-Demand service. You only need a fax machine and there is no charge for the service except for long distance telephone charges the user may incur. The list of documents on public inspection and the daily Federal Register's table of contents are available using this service. The document numbers are 7050-Public Inspection list and 7051-Table of Contents list. The public inspection list will be updated immediately for documents filed on an emergency basis.

NOTE: YOU WILL ONLY GET A LISTING OF DOCUMENTS ON FILE AND NOT THE ACTUAL DOCUMENT. Documents on public inspection may be viewed and copied in our office located at 800 North Capitol Street, N.W., Suite 700. The Fax-On-Demand telephone number is: **301–713–6905**

FEDERAL REGISTER PAGES AND DATES, JUNE

29649–30228 2
30229–30426 3
30427–30738 4
30739–30978 5
30979–31314 6
31315–31506 9
31507–31700 10
31701–32020 11
32021–32194 12
32195–32470 13
32471–32682 16

CFR PARTS AFFECTED DURING JUNE

At the end of each month, the Office of the Federal Register publishes separately a List of CFR Sections Affected (LSA), which lists parts and sections affected by documents published since the revision date of each title.

3 CFR

Proclamations:
7007 30415
7008 30427
7009 31699

Executive Orders:
12552 (Revoked by EO 13048) 33471
13048 32467
13049 33471

Administrative Orders:
Presidential Determinations:
No. 97–24 of May 23, 1997 30737
No. 97–25 of May 29, 1997 31313
No. 97–26 of May 30, 1997 32015
No. 97–27 of June 3, 1997 32017
No. 97–28 of June 3, 1997 32019

5 CFR

330 31315
1651 32426
1690 32473
2641 31866
3801 31866

Proposed Rules:
338 30778
581 31763
582 31763

7 CFR

80 29649
272 29652
275 29652
301 30739
330 29662
340 29662
351 29662
372 29662
723 30229
800 31701
911 30429
944 30429
979 30979
985 31704
989 32473
1464 30229
1703 32434
1753 32476
1786 32477

Proposed Rules:
401 32544
457 32544
911 30467
918 30468
927 32548
944 30467
1205 31012
1753 32552
1951 29678

9 CFR

101 31326
113 31329

Proposed Rules:
94 32051
96 32051
304 32053
308 32053
310 32053
320 32053
327 32053
381 .....31017, 32053
416 32053
417 32053

10 CFR

170 32682
171 32682
1703 30432

Proposed Rules:
30 32552
32 32552
430 31524
451 31524
711 30469
835 30481

11 CFR

111 32021

12 CFR

617 32478

Proposed Rules:
261 31526
575 30778

14 CFR

25 .....31707, 32021
33 29663
39 .....30230, 30433, 31331, 32023, 32025
71 .....31337, 31507, 32195, 32478
97 .....32027, 32029
107 31672
108 31672

Proposed Rules:
25 .....31482, 32412
27 31476
29 31476
39 .....30481, 30483, 31020, 31021, 31370, 31536, 31766
71 .....29679, 30784, 31371, 31372, 31373, 31374, 31769, 31770, 32242, 32243, 32244, 32245
121 32412
135 32412

150.....32054, 32152

15 CFR

738.....31473
740.....31473
770.....31473
772.....31473
774.....31473
902.....30741
922.....32154
929.....32154
937.....32154
Proposed Rules:
922.....32246

16 CFR

Proposed Rules:
1014.....29680

17 CFR

1.....31507
190.....31708
Proposed Rules:
32.....31375
240.....30485

18 CFR

153.....30435

19 CFR

10.....31383
12.....31713
24.....30448
123.....31383, 32030
128.....31383
141.....31383
143.....31383
145.....31383
148.....31383

20 CFR

404.....30746
416.....30747, 30980

21 CFR

101.....31338
113.....31721
172.....30984
178.....30455, 31511
184.....30751
312.....32479
589.....30936
872.....31512
882.....30456
886.....30985
Proposed Rules:
111.....30678
812.....31023
878.....31771

22 CFR

42.....32196
Proposed Rules:
22.....32558

23 CFR

658.....30757

24 CFR

200.....30222
202.....30222
203.....30222
206.....30222
585.....31954
Proposed Rules:
291.....32251
570.....31944

26 CFR

54.....31669, 31670
Proposed Rules:
1.....30785, 32054
301.....30785, 30796

27 CFR

24.....29663
Proposed Rules:
24.....29681

28 CFR

0.....32031
45.....31866
58.....30172

29 CFR

1910.....29669
2520.....31696
2590.....31669, 31670
4044.....32197

30 CFR

870.....30232
904.....31473
Proposed Rules:
56.....32252
57.....32252
62.....32252
70.....32252
71.....32252
202.....31538
206.....31538
211.....31538
243.....29682
250.....31538, 32252
916.....30535
917.....30540
925.....31541
934.....30800
943.....31543
944.....32255
948.....31543

31 CFR

356.....32032
357.....32032

32 CFR

1900.....32479
1901.....32479
1907.....32479
1908.....32479
1909.....32479

33 CFR

5.....31339
26.....31339
27.....31339
95.....31339
100 .....30759, 30988, 31339, 32198, 32199
110.....31339
117.....31722, 31723
130.....31339
136.....31339
138.....31339
140.....31339
151.....31339
153.....31339
165 .....30759, 31340, 32199, 32200
177.....31339
Proposed Rules:
165.....31385

34 CFR

685.....30411

36 CFR

Ch. I.....30232
1.....30232
7.....30232, 32201
8.....30232
9.....30232
11.....30232
13.....30232
17.....30232
18.....30232
20.....30232
21.....30232
28.....30232
51.....30232
65.....30232
67.....30232
73.....30232
78.....30232
1256.....31724
1258.....32203
Proposed Rules:
1190.....30546
1191.....30546

37 CFR

Proposed Rules:
2.....30802
3.....30802

38 CFR

4.....30235
17.....30241
Proposed Rules:
3.....30547

39 CFR

111.....30457, 31512
233.....31726
3001.....30242

40 CFR

51.....32500
52 .....29668, 30251, 30253, 30760, 30991, 31341, 31343, 31349, 31732, 31734, 31738, 32204, 32207, 32537
60.....31351, 32033
61.....32033
63 .....30258, 30993, 30995, 31361, 32033, 32209
70.....31516
76.....32033
80.....30261
81.....30271
82.....30276
85.....31192
86.....31192
136.....30761
157.....32223
180 .....29669, 30996, 31190, 32224, 32230
260.....32452
264.....32452
265.....32452
266.....32452
Proposed Rules:
9.....31025
51.....30289
52 .....29682, 30290, 30818, 30821, 31025, 31037, 31387, 31388, 31394, 31398, 31775, 31776, 32055, 32058, 32257, 32258, 32559
60.....30548
63 .....30548, 31038, 31405, 31776, 32266
69.....31546
70.....30289
81 .....30291, 31394, 31398
86.....30291
122.....31025
123.....31025
131.....31025
132.....31025
148.....31406
180.....30549
185.....30549
260.....30548
261.....30548, 31406
264.....30548
265.....30548
266.....30548, 31406
268.....31406
270.....30548
271 .....29684, 29688, 30548, 31406
300.....30554

41 CFR

51–3.....32236
51–4.....32236
51–6.....32236
101–38.....31740
301.....30260
Proposed Rules:
101.....31550

42 CFR

Proposed Rules:
412.....29902
413.....29902
489.....29902

44 CFR

64.....31520
65.....30280, 30283
67.....30285
Proposed Rules:
67.....30296

45 CFR

144.....31669, 31670
146.....31669, 31670
148.....31695, 31670
675.....31521
1639.....30763

47 CFR

24.....31002
61 .....31003, 31868, 31939
69.....31868
73 .....31005, 31006, 31007, 31008, 31364, 32237, 32238, 32239, 32240
Proposed Rules:
1.....31777
69.....31040
73.....32061
101.....32267

48 CFR

6104.....32241
6105.....32241
9903.....31294

9904 31308
Proposed Rules:
0 30186
4 30186
7 30186
8 30186
15 30186
16 30186
17 30186
22 30186
27 30186
28 30186
31 30186
32 30186
35 30186
42 30186
43 30186
44 30186
45 30186
49 30186
51 30186
52 30186
53 30186
214 30829
215 30829
225 30831
245 30832
252 ....30831, 30832
932 30556
970 30556

49 CFR

171 ....29673, 30767, 31363
172 30767
195 31364
232 30461
356 32040
370 32040
379 32040
571 ....34064, 31008, 31367, 52538
1312 30286
Proposed Rules:
390 32066
392 32066
393 32066
571 32562,
1157 32068

50 CFR

17 ....30772, 31740, 31748, 31757
24 30773
285 30741
630 30775
660 ....29676, 30776, 32048, 32543
679 ....30280, 30283, 31010, 31367, 31369, 32048, 32049
Proposed Rules:
13 32189
14 31044
17 ....32070, 32189, 32268
20 31298
23 31054
600 ....30835, 32071
622 32072
648 ....29694, 30835, 31551
660 ....30305, 31551
679 ....30835, 32564, 32579

REMINDERS

The items in this list were editorially compiled as an aid to Federal Register users. Inclusion or exclusion from this list has no legal significance.

RULES GOING INTO EFFECT JUNE 16, 1997

AGRICULTURE DEPARTMENT

Rural Utilities Service

Grants and cooperative agreements; availability, etc.:
- Alaska; RUS privatization demonstration prepayment program; published 6-16-97

COMMERCE DEPARTMENT

National Oceanic and Atmospheric Administration

Tuna, Atlantic bluefin fisheries; published 6-5-97

ENVIRONMENTAL PROTECTION AGENCY

Air pollution; standards of performance for new stationary sources:
- Phosphate fertilizer industry; granular triple superphosphate storage facilities; published 4-15-97

Air programs:
- Ambient air quality surveillance; ozone monitoring season modification for Connecticut, Maine, Massachusetts, New Hampshire, Rhode Island, and Vermont; published 4-16-97

Air quality implementation plans:
- Preparation, adoption, and submittal—
  - State capture efficiency ozone testing; published 6-16-97

Air quality implementation plans; approval and promulgation; various States:
- California; published 4-17-97
- Ohio; published 4-16-97
- Virginia; published 5-15-97

Air quality implementation plans; √A√approval and promulgation; various States; air quality planning purposes; designation of areas:
- Indiana; published 4-16-97

EQUAL EMPLOYMENT OPPORTUNITY COMMISSION

Debt Collection Improvement Act of 1996:
- Civil money penalty for violation of notice posting requirements; inflation adjustment; published 5-16-97

FEDERAL COMMUNICATIONS COMMISSION

Common carrier services:
- Local exchange carriers; price cap performance review; published 6-11-97

Radio stations; table of assignments:
- Michigan; published 5-7-97
- Mississippi; published 5-7-97
- Missouri; published 5-7-97
- Pennsylvania; published 5-7-97
- Washington; published 5-7-97

FEDERAL RETIREMENT THRIFT INVESTMENT BOARD

Thrift savings plan:
- Miscellaneous regulations; published 6-16-97

HOUSING AND URBAN DEVELOPMENT DEPARTMENT

Federal regulatory reform:
- Low income housing—
  - Assisted housing admission preferences; Total development cost calculation; Housing assistance payments (Section 8); published 5-16-97

SECURITIES AND EXCHANGE COMMISSION

Investment companies:
- Investment company assets; custody outside the United States; published 5-16-97

TRANSPORTATION DEPARTMENT

Coast Guard

Federal regulatory reform:
- Electrical engineering requirements for merchant vessels; published 5-1-97

TRANSPORTATION DEPARTMENT

Federal Aviation Administration

Airworthiness directives:
- Construcciones Aeronauticas, S.A. (CASA); published 5-12-97
- Israel Aircraft Industries, Ltd.; published 5-12-97
- Jetstream; published 5-12-97
- McDonnell Douglas; published 5-12-97

COMMENTS DUE NEXT WEEK

AGRICULTURE DEPARTMENT

Agricultural Marketing Service

Potatoes (Irish) grown in—
- California et al.; comments due by 6-18-97; published 5-19-97

AGRICULTURE DEPARTMENT

Federal Crop Insurance Corporation

Crop insurance regulations:
- Dry peas; comments due by 6-16-97; published 5-15-97

AGRICULTURE DEPARTMENT

Rural Utilities Service

Electric loans:
- Electric system operations and maintenance; comments due by 6-16-97; published 4-16-97

COMMERCE DEPARTMENT

National Oceanic and Atmospheric Administration

Fishery conservation and management:
- Alaska; fisheries of Exclusive Economic Zone—
  - Shortraker and rougheye rockfish; comments due by 6-18-97; published 6-3-97
- Magnuson Act provisions and Northeastern United States fisheries—
  - Experimental fishing permits; comments due by 6-20-97; published 6-5-97

DEFENSE DEPARTMENT

Federal Acquisition Regulation (FAR):
- Agency information collection activities—
  - Proposed collection; comment request; comments due by 6-17-97; published 4-18-97
- Empowerment contracting; comments due by 6-17-97; published 4-18-97
- Subcontract consent; comments due by 6-20-97; published 4-21-97

ENVIRONMENTAL PROTECTION AGENCY

Air programs:
- Fuels and fuel additives—
  - California gasoline refiners, importers, and oxygenate blenders; enforcement exemptions; comments due by 6-16-97; published 4-16-97
  - Gasoline produced by foreign refiners; baseline requirements; hearing; comments due by 6-20-97; published 5-12-97
- Stratospheric ozone protection—
  - Significant new alternatives policy program; comments due by 6-20-97; published 5-21-97

Pesticides; tolerances in food, animal feeds, and raw agricultural commodities:
- Deoxyribonucleic acid etc.; comments due by 6-16-97; published 5-16-97
- Plant pesticides; comments due by 6-16-97; published 5-16-97
- Viral coat protein; comments due by 6-16-97; published 5-16-97

Solid wastes:
- Hazardous waste combustors, etc.; maximum achievable control technologies performance standards; comments due by 6-17-97; published 6-4-97

FEDERAL COMMUNICATIONS COMMISSION

North American Numbering Council recommendations; comment request; comments due by 6-20-97; published 5-27-97

Personal communications services:
- Narrowband PCS—
  - Channels and response channels; eligibility and service area issues; comments due by 6-18-97; published 5-20-97

Radio stations; table of assignments:
- Arizona; comments due by 6-16-97; published 4-30-97
- California; comments due by 6-16-97; published 4-30-97
- Louisiana; comments due by 6-16-97; published 4-30-97

Television broadcasting:
- Advanced television systems (ATV); impact on existing television services; reconsideration petitions; comments due by 6-16-97; published 6-13-97

FEDERAL EMERGENCY MANAGEMENT AGENCY

Flood insurance program:

Flood mitigation assistance; comments due by 6-18-97; published 3-20-97

Write-your-own program—

Private sector property insurers assistance; comments due by 6-16-97; published 5-1-97

GENERAL SERVICES ADMINISTRATION

Federal Acquisition Regulation (FAR):

Agency information collection activities—

Proposed collection; comment request; comments due by 6-17-97; published 4-18-97

Empowerment contracting; comments due by 6-17-97; published 4-18-97

Subcontract consent; comments due by 6-20-97; published 4-21-97

JUSTICE DEPARTMENT

Immigration and Naturalization Service

Immigration:

Checkpoints; pre-enrolled access lane program; establishment; comments due by 6-17-97; published 4-18-97

JUSTICE DEPARTMENT

Prisons Bureau

Inmate control, custody, care, etc.:

Classification and program review; team meetings; comments due by 6-20-97; published 4-21-97

NATIONAL AERONAUTICS AND SPACE ADMINISTRATION

Federal Acquisition Regulation (FAR):

Agency information collection activities—

Proposed collection; comment request; comments due by 6-17-97; published 4-18-97

Empowerment contracting; comments due by 6-17-97; published 4-18-97

Subcontract consent; comments due by 6-20-97; published 4-21-97

RAILROAD RETIREMENT BOARD

Debt Collection Improvement Act of 1996:

Collection of debts by offset against Federal payments; comments due by 6-20-97; published 4-21-97

Railroad Unemployment Insurance Act:

Sickness benefits; acceptance of statement of sickness executed by substance-abuse professional in support of payment; comments due by 6-17-97; published 4-18-97

SOCIAL SECURITY ADMINISTRATION

Social security benefits and supplemental security income:

Federal old age, survivors and disability insurance—

Disability claims; testing elimination of final step in administrative review process; comments due by 6-16-97; published 5-16-97

TRANSPORTATION DEPARTMENT

Coast Guard

Drawbridge operations:

Maryland; comments due by 6-20-97; published 4-21-97

New Jersey; comments due by 6-20-97; published 4-21-97

Regattas and marine parades:

Assateague Channel, VA; marine events; comments due by 6-20-97; published 4-21-97

TRANSPORTATION DEPARTMENT

Economic regulations:

Domestic passenger manifest information; comments due by 6-20-97; published 5-30-97

TRANSPORTATION DEPARTMENT

Federal Aviation Administration

Airworthiness directives:

Lockheed; comments due by 6-20-97; published 5-9-97

Saab; comments due by 6-19-97; published 5-8-97

Class D airspace; comments due by 6-16-97; published 5-1-97

Class D and Class E airspace; comments due by 6-16-97; published 4-25-97

Class E airspace; comments due by 6-16-97; published 4-25-97

TRANSPORTATION DEPARTMENT

National Highway Traffic Safety Administration

Motor vehicle safety standards:

Accelerator control systems; Federal regulatory review; withdrawn; technical workshop; comments due by 6-20-97; published 3-21-97

Metric conversion; weights and measures system; comments due by 6-20-97; published 4-21-97

CFR CHECKLIST

This checklist, prepared by the Office of the Federal Register, is published weekly. It is arranged in the order of CFR titles, stock numbers, prices, and revision dates.

An asterisk (*) precedes each entry that has been issued since last week and which is now available for sale at the Government Printing Office.

A "●" precedes each entry that is now available on-line through the Government Printing Office's *GPO Access* **service at http://www.access.gpo.gov/nara/cfr. For information about** *GPO Access* **call 1-888-293-6498 (toll free).**

A checklist of current CFR volumes comprising a complete CFR set, also appears in the latest issue of the LSA (List of CFR Sections Affected), which is revised monthly.

The annual rate for subscription to all revised volumes is $951.00 domestic, $237.75 additional for foreign mailing.

Mail orders to the Superintendent of Documents, Attn: New Orders, P.O. Box 371954, Pittsburgh, PA 15250–7954. All orders must be accompanied by remittance (check, money order, GPO Deposit Account, VISA, Master Card, or Discover). Charge orders may be telephoned to the GPO Order Desk, Monday through Friday, at **(202) 512–1800** from 8:00 a.m. to 4:00 p.m. eastern time, or FAX your charge orders to **(202) 512-2250**.

Title	Stock Number	Price	Revision Date
●**1, 2 (2** Reserved)	(869–032–00001–8)	$5.00	Feb. 1, 1997
●**3** (1996 Compilation and Parts 100 and 101)	(869–032–00002–6)	20.00	[1] Jan. 1, 1997
●**4**	(869–032–00003–4)	7.00	Jan. 1, 1997
5 Parts:			
●1–699	(869–032–0004–2)	34.00	Jan. 1, 1997
●700–1199	(869–032–00005–1)	26.00	Jan. 1, 1997
●1200–End, 6 (6 Reserved)	(869–032–00006–9)	33.00	Jan. 1, 1997
7 Parts:			
●0–26	(869–032–00007–7)	26.00	Jan. 1, 1997
●27–52	(869–032–00008–5)	30.00	Jan. 1, 1997
●53–209	(869–032–00009–3)	22.00	Jan. 1, 1997
●210–299	(869–032–00010–7)	44.00	Jan. 1, 1997
●300–399	(869–032–00011–5)	22.00	Jan. 1, 1997
●400–699	(869–032–00012–3)	28.00	Jan. 1, 1997
●700–899	(869–032–00013–1)	31.00	Jan. 1, 1997
●900–999	(869–032–00014–0)	40.00	Jan. 1, 1997
●1000–1199	(869–032–00015–8)	45.00	Jan. 1, 1997
●1200–1499	(869–032–00016–6)	33.00	Jan. 1, 1997
●1500–1899	(869–032–00017–4)	53.00	Jan. 1, 1997
●1900–1939	(869–032–00018–2)	19.00	Jan. 1, 1997
●1940–1949	(869–032–00019–1)	40.00	Jan. 1, 1997
●1950–1999	(869–032–00020–4)	42.00	Jan. 1, 1997
●2000–End	(869–032–00021–2)	20.00	Jan. 1, 1997
●**8**	(869–032–00022–1)	30.00	Jan. 1, 1997
9 Parts:			
●1–199	(869–032–00023–9)	39.00	Jan. 1, 1997
●200–End	(869–032–00024–7)	33.00	Jan. 1, 1997
10 Parts:			
●0–50	(869–032–00025–5)	39.00	Jan. 1, 1997
●51–199	(869–032–00026–3)	31.00	Jan. 1, 1997
●200–499	(869–032–00027–1)	30.00	Jan. 1, 1997
●500–End	(869–032–00028–0)	42.00	Jan. 1, 1997
●**11**	(869–032–00029–8)	20.00	Jan. 1, 1997
12 Parts:			
●1–199	(869–032–00030–1)	16.00	Jan. 1, 1997
●200–219	(869–032–00031–0)	20.00	Jan. 1, 1997
●220–299	(869–032–00032–8)	34.00	Jan. 1, 1997
●300–499	(869–032–00033–6)	27.00	Jan. 1, 1997
●500–599	(869–032–00034–4)	24.00	Jan. 1, 1997
●600–End	(869–032–00035–2)	40.00	Jan. 1, 1997
●**13**	(869–032–00036–1)	23.00	Jan. 1, 1997
14 Parts:			
●1–59	(869–032–00037–9)	44.00	Jan. 1, 1997
●60–139	(869–032–00038–7)	38.00	Jan. 1, 1997
140–199	(869–032–00039–5)	16.00	Jan. 1, 1997
●200–1199	(869–032–00040–9)	30.00	Jan. 1, 1997
●1200–End	(869–032–00041–7)	21.00	Jan. 1, 1997
15 Parts:			
0–299	(869–032–00042–5)	21.00	Jan. 1, 1997
300–799	(869–032–00043–3)	32.00	Jan. 1, 1997
●800–End	(869–032–00044–1)	22.00	Jan. 1, 1997
16 Parts:			
●0–999	(869–032–00045–0)	30.00	Jan. 1, 1997
●1000–End	(869–032–00046–8)	34.00	Jan. 1, 1997
17 Parts:			
●1–199	(869–028–00052–5)	21.00	Apr. 1, 1996
200–239	(869–028–00053–3)	25.00	Apr. 1, 1996
●240–End	(869–028–00054–1)	31.00	Apr. 1, 1996
18 Parts:			
1–149	(869–028–00055–0)	17.00	Apr. 1, 1996
150–279	(869–028–00056–8)	12.00	Apr. 1, 1996
280–399	(869–028–00057–6)	13.00	Apr. 1, 1996
●400–End	(869–032–00052–2)	14.00	Apr. 1, 1997
19 Parts:			
●1–140	(869–032–00053–1)	33.00	Apr. 1, 1997
●141–199	(869–032–00054–9)	30.00	Apr. 1, 1997
●200–End	(869–032–00055–7)	16.00	Apr. 1, 1997
20 Parts:			
1–399	(869–028–00062–2)	20.00	Apr. 1, 1996
●400–499	(869–032–00057–3)	46.00	Apr. 1, 1997
*●500–End	(869–032–00058–1)	42.00	Apr. 1, 1997
21 Parts:			
*●1–99	(869–032–00059–0)	21.00	Apr. 1, 1997
●100–169	(869–028–00066–5)	22.00	Apr. 1, 1996
●170–199	(869–032–00061–1)	28.00	Apr. 1, 1997
●200–299	(869–028–00068–1)	7.00	Apr. 1, 1996
●300–499	(869–028–00069–0)	50.00	Apr. 1, 1996
●500–599	(869–028–00070–3)	28.00	Apr. 1, 1996
●600–799	(869–028–00071–1)	8.50	Apr. 1, 1996
●800–1299	(869–028–00072–0)	30.00	Apr. 1, 1996
●1300–End	(869–028–00073–8)	14.00	Apr. 1, 1996
22 Parts:			
●1–299	(869–028–00074–6)	36.00	Apr. 1, 1996
300–End	(869–028–00075–4)	24.00	Apr. 1, 1996
23	(869–028–00076–2)	21.00	Apr. 1, 1996
24 Parts:			
0–199	(869–028–00077–1)	30.00	May 1, 1996
200–219	(869–028–00078–9)	14.00	May 1, 1996
220–499	(869–028–00079–7)	13.00	May 1, 1996
500–699	(869–032–00073–5)	18.00	Apr. 1, 1997
700–899	(869–028–00081–9)	13.00	May 1, 1996
900–1699	(869–028–00082–7)	21.00	May 1, 1996
1700–End	(869–028–00083–5)	14.00	May 1, 1996
***25**	(869–032–00076–0)	42.00	May 1, 1997
26 Parts:			
§§ 1.0-1–1.60	(869–032–00077–8)	21.00	Apr. 1, 1997
§§ 1.61–1.169	(869–028–00086–0)	34.00	Apr. 1, 1996
§§ 1.170–1.300	(869–028–00087–8)	24.00	Apr. 1, 1996
§§ 1.301–1.400	(869–028–00088–6)	17.00	Apr. 1, 1996
*§§ 1.401–1.440	(869–032–00081–6)	39.00	Apr. 1, 1997
§§ 1.441-1.500	(869-032-00082-4)	22.00	Apr. 1, 1997
§§ 1.501–1.640	(869–028–00091–6)	21.00	Apr. 1, 1996
§§ 1.641–1.850	(869–032–00084–1)	33.00	Apr. 1, 1997
§§ 1.851–1.907	(869–028–00093–2)	26.00	Apr. 1, 1996
§§ 1.908–1.1000	(869–028–00094–1)	26.00	Apr. 1, 1996
§§ 1.1001–1.1400	(869–028–00095–9)	26.00	Apr. 1, 1996
§§ 1.1401–End	(869–028–00096–7)	35.00	Apr. 1, 1996
2–29	(869–028–00097–5)	28.00	Apr. 1, 1996
30–39	(869–028–00098–3)	20.00	Apr. 1, 1996
40–49	(869–028–00099–1)	13.00	Apr. 1, 1996
50–299	(869–032–00092–1)	18.00	Apr. 1, 1997

Title	Stock Number	Price	Revision Date
300–499	(869–028–00101–7)	25.00	Apr. 1, 1996
500–599	(869–032–00094–8)	6.00	[4] Apr. 1, 1990
600–End	(869–032–00095–3)	9.50	Apr. 1, 1997
27 Parts:			
1–199	(869–028–00104–1)	44.00	Apr. 1, 1996
200–End	(869–028–00105–0)	13.00	Apr. 1, 1996
28 Parts:			
1-42	(869–028–00106–8)	35.00	July 1, 1996
43-end	(869-028-00107-6)	30.00	July 1, 1996
29 Parts:			
0–99	(869–028–00108–4)	26.00	July 1, 1996
100–499	(869–028–00109–2)	12.00	July 1, 1996
500–899	(869–028–00110–6)	48.00	July 1, 1996
900–1899	(869–028–00111–4)	20.00	July 1, 1996
1900–1910 (§§ 1900 to 1910.999)	(869–028–00112–2)	43.00	July 1, 1996
1910 (§§ 1910.1000 to end)	(869–028–00113–1)	27.00	July 1, 1996
1911–1925	(869–028–00114–9)	19.00	July 1, 1996
1926	(869–028–00115–7)	30.00	July 1, 1996
1927–End	(869–028–00116–5)	38.00	July 1, 1996
30 Parts:			
1–199	(869–028–00117–3)	33.00	July 1, 1996
200–699	(869–028–00118–1)	26.00	July 1, 1996
700–End	(869–028–00119–0)	38.00	July 1, 1996
31 Parts:			
0–199	(869–028–00120–3)	20.00	July 1, 1996
200–End	(869–028–00121–1)	33.00	July 1, 1996
32 Parts:			
1–39, Vol. I		15.00	[2] July 1, 1984
1–39, Vol. II		19.00	[2] July 1, 1984
1–39, Vol. III		18.00	[2] July 1, 1984
1–190	(869–028–00122–0)	42.00	July 1, 1996
191–399	(869–028–00123–8)	50.00	July 1, 1996
400–629	(869–028–00124–6)	34.00	July 1, 1996
630–699	(869–028–00125–4)	14.00	[5] July 1, 1991
700–799	(869–028–00126–2)	28.00	July 1, 1996
800–End	(869–028–00127–1)	28.00	July 1, 1996
33 Parts:			
1–124	(869–028–00128–9)	26.00	July 1, 1996
125–199	(869–028–00129–7)	35.00	July 1, 1996
200–End	(869–028–00130–1)	32.00	July 1, 1996
34 Parts:			
1–299	(869–028–00131–9)	27.00	July 1, 1996
300–399	(869–028–00132–7)	27.00	July 1, 1996
400–End	(869–028–00133–5)	46.00	July 1, 1996
35	(869–028–00134–3)	15.00	July 1, 1996
36 Parts			
1–199	(869–028–00135–1)	20.00	July 1, 1996
200–End	(869–028–00136–0)	48.00	July 1, 1996
37	(869–028–00137–8)	24.00	July 1, 1996
38 Parts:			
0–17	(869–028–00138–6)	34.00	July 1, 1996
18–End	(869–028–00139–4)	38.00	July 1, 1996
39	(869–028–00140–8)	23.00	July 1, 1996
40 Parts:			
●1–51	(869–028–00141–6)	50.00	July 1, 1996
●52	(869–028–00142–4)	51.00	July 1, 1996
●53–59	(869–028–00143–2)	14.00	July 1, 1996
60	(869-028-00144-1)	47.00	July 1, 1996
●61–71	(869–028–00145–9)	47.00	July 1, 1996
●72–80	(869–028–00146–7)	34.00	July 1, 1996
●81–85	(869–028–00147–5)	31.00	July 1, 1996
86	(869–028–00148–3)	46.00	July 1, 1996
●87-135	(869–028–00149–1)	35.00	July 1, 1996
●136–149	(869–028–00150–5)	35.00	July 1, 1996
●150–189	(869–028–00151–3)	33.00	July 1, 1996
●190–259	(869–028–00152–1)	22.00	July 1, 1996
●260–299	(869–028–00153–0)	53.00	July 1, 1996
●300–399	(869–028–00154–8)	28.00	July 1, 1996
●400–424	(869–028–00155–6)	33.00	July 1, 1996
●425–699	(869–028–00156–4)	38.00	July 1, 1996
●700–789	(869–028–00157–2)	33.00	July 1, 1996
●790–End	(869–028–00158–7)	19.00	July 1, 1996
41 Chapters:			
1, 1–1 to 1–10		13.00	[3] July 1, 1984
1, 1–11 to Appendix, 2 (2 Reserved)		13.00	[3] July 1, 1984
3–6		14.00	[3] July 1, 1984
7		6.00	[3] July 1, 1984
8		4.50	[3] July 1, 1984
9		13.00	[3] July 1, 1984
10–17		9.50	[3] July 1, 1984
18, Vol. I, Parts 1–5		13.00	[3] July 1, 1984
18, Vol. II, Parts 6–19		13.00	[3] July 1, 1984
18, Vol. III, Parts 20–52		13.00	[3] July 1, 1984
19–100		13.00	[3] July 1, 1984
1–100	(869–028–00159–9)	12.00	July 1, 1996
101	(869–028–00160–2)	36.00	July 1, 1996
102–200	(869–028–00161–1)	17.00	July 1, 1996
201–End	(869–028–00162–9)	17.00	July 1, 1996
42 Parts:			
●1–399	(869–028–00163–7)	32.00	Oct. 1, 1996
●400–429	(869–028–00164–5)	34.00	Oct. 1, 1996
●430–End	(869–028–00165–3)	44.00	Oct. 1, 1996
43 Parts:			
●1–999	(869–028–00166–1)	30.00	Oct. 1, 1996
●1000–end	(869–028–00167–0)	45.00	Oct. 1, 1996
●44	(869–028–00168–8)	31.00	Oct. 1, 1996
45 Parts:			
●1–199	(869–028–00169–6)	28.00	Oct. 1, 1996
●200–499	(869–028–00170–0)	14.00	[6] Oct. 1, 1995
●500–1199	(869–028–00171–8)	30.00	Oct. 1, 1996
●1200–End	(869–028–00172–6)	36.00	Oct. 1, 1996
46 Parts:			
●1–40	(869–028–00173–4)	26.00	Oct. 1, 1996
●41–69	(869–028–00174–2)	21.00	Oct. 1, 1996
●70–89	(869–028–00175–1)	11.00	Oct. 1, 1996
●90–139	(869–028–00176–9)	26.00	Oct. 1, 1996
●140–155	(869–028–00177–7)	15.00	Oct. 1, 1996
●156–165	(869–028–00178–5)	20.00	Oct. 1, 1996
●166–199	(869–028–00179–3)	22.00	Oct. 1, 1996
●200–499	(869–028–00180–7)	21.00	Oct. 1, 1996
●500–End	(869–028–00181–5)	17.00	Oct. 1, 1996
47 Parts:			
●0–19	(869–028–00182–3)	35.00	Oct. 1, 1996
●20–39	(869–028–00183–1)	26.00	Oct. 1, 1996
●40–69	(869–028–00184–0)	18.00	Oct. 1, 1996
●70–79	(869–028–00185–8)	33.00	Oct. 1, 1996
●80–End	(869–028–00186–6)	39.00	Oct. 1, 1996
48 Chapters:			
●1 (Parts 1–51)	(869–028–00187–4)	45.00	Oct. 1, 1996
●1 (Parts 52–99)	(869–028–00188–2)	29.00	Oct. 1, 1996
●2 (Parts 201–251)	(869–028–00189–1)	22.00	Oct. 1, 1996
●2 (Parts 252–299)	(869–028–00190–4)	16.00	Oct. 1, 1996
●3–6	(869–028–00191–2)	30.00	Oct. 1, 1996
●7–14	(869–028–00192–1)	29.00	Oct. 1, 1996
●15–28	(869–028–00193–9)	38.00	Oct. 1, 1996
●29–End	(869–028–00194–7)	25.00	Oct. 1, 1996
49 Parts:			
●1–99	(869–028–00195–5)	32.00	Oct. 1, 1996
●100–185	(869–028–00196–3)	50.00	Oct. 1, 1996
●186–199	(869–028–00197–1)	14.00	Oct. 1, 1996
●200–399	(869–028–00198–0)	39.00	Oct. 1, 1996
●400–999	(869–028–00199–8)	49.00	Oct. 1, 1996
●1000–1199	(869–028–00200–5)	23.00	Oct. 1, 1996
●1200–End	(869–028–00201–3)	15.00	Oct. 1, 1996
50 Parts:			
●1–199	(869–028–00202–1)	34.00	Oct. 1, 1996
●200–599	(869–028–00203–0)	22.00	Oct. 1, 1996
●600–End	(869–028–00204–8)	26.00	Oct. 1, 1996

Title	Stock Number	Price	Revision Date
CFR Index and Findings Aids	(869–032–00047–6)	45.00	Jan. 1, 1997
Complete 1997 CFR set		951.00	1997
Microfiche CFR Edition:			
Subscription (mailed as issued)		247.00	1997
Individual copies		1.00	1997
Complete set (one-time mailing)		264.00	1996
Complete set (one-time mailing)		264.00	1995

[1] Because Title 3 is an annual compilation, this volume and all previous volumes should be retained as a permanent reference source.

[2] The July 1, 1985 edition of 32 CFR Parts 1–189 contains a note only for Parts 1–39 inclusive. For the full text of the Defense Acquisition Regulations in Parts 1–39, consult the three CFR volumes issued as of July 1, 1984, containing those parts.

[3] The July 1, 1985 edition of 41 CFR Chapters 1–100 contains a note only for Chapters 1 to 49 inclusive. For the full text of procurement regulations in Chapters 1 to 49, consult the eleven CFR volumes issued as of July 1, 1984 containing those chapters.

[4] No amendments to this volume were promulgated during the period Apr. 1, 1990 to Mar. 31, 1997. The CFR volume issued April 1, 1990, should be retained.

[5] No amendments to this volume were promulgated during the period July 1, 1991 to June 30, 1996. The CFR volume issued July 1, 1991, should be retained.

[6] No amendments were promulgated during the period October 1, 1995 to September 30, 1996. The CFR volume issued October 1, 1995 should be retained.