7–9–97
Vol. 62 No. 131
Pages 36645–36964

federal register

Wednesday
July 9, 1997

Now Available Online

Code of Federal Regulations

via

GPO Access

(Selected Volumes)

Free, easy, online access to selected *Code of Federal Regulations (CFR)* volumes is now available via *GPO Access*, a service of the United States Government Printing Office (GPO). *CFR* titles will be added to *GPO Access* incrementally throughout calendar years 1996 and 1997 until a complete set is available. GPO is taking steps so that the online and printed versions of the *CFR* will be released concurrently.

The *CFR* and *Federal Register* on *GPO Access*, are the official online editions authorized by the Administrative Committee of the Federal Register.

New titles and/or volumes will be added to this online service as they become available.

http://www.access.gpo.gov/nara/cfr

For additional information on ***GPO Access*** products, services and access methods, see page II or contact the *GPO Access* User Support Team via:

★ Phone: toll-free: 1-888-293-6498

★ Email: gpoaccess@gpo.gov

FEDERAL REGISTER Published daily, Monday through Friday, (not published on Saturdays, Sundays, or on official holidays), by the Office of the Federal Register, National Archives and Records Administration, Washington, DC 20408, under the Federal Register Act (49 Stat. 500, as amended; 44 U.S.C. Ch. 15) and the regulations of the Administrative Committee of the Federal Register (1 CFR Ch. I). Distribution is made only by the Superintendent of Documents, U.S. Government Printing Office, Washington, DC 20402.

The Federal Register provides a uniform system for making available to the public regulations and legal notices issued by Federal agencies. These include Presidential proclamations and Executive Orders and Federal agency documents having general applicability and legal effect, documents required to be published by act of Congress and other Federal agency documents of public interest. Documents are on file for public inspection in the Office of the Federal Register the day before they are published, unless earlier filing is requested by the issuing agency.

The seal of the National Archives and Records Administration authenticates this issue of the Federal Register as the official serial publication established under the Federal Register Act. 44 U.S.C. 1507 provides that the contents of the **Federal Register** shall be judicially noticed.

The Federal Register is published in paper, 24x microfiche and as an online database through *GPO Access*, a service of the U.S. Government Printing Office. The online edition of the **Federal Register** on *GPO Access* is issued under the authority of the Administrative Committee of the Federal Register as the official legal equivalent of the paper and microfiche editions. The online database is updated by 6 a.m. each day the **Federal Register** is published. The database includes both text and graphics from Volume 59, Number 1 (January 2, 1994) forward. Free public access is available on a Wide Area Information Server (WAIS) through the Internet and via asynchronous dial-in. Internet users can access the database by using the World Wide Web; the Superintendent of Documents home page address is http://www.access.gpo.gov/su__docs/, by using local WAIS client software, or by telnet to swais.access.gpo.gov, then login as guest, (no password required). Dial-in users should use communications software and modem to call (202) 512–1661; type swais, then login as guest (no password required). For general information about *GPO Access*, contact the *GPO Access* User Support Team by sending Internet e-mail to gpoaccess@gpo.gov; by faxing to (202) 512–1262; or by calling toll free 1–888–293–6498 or (202) 512–1530 between 7 a.m. and 5 p.m. Eastern time, Monday–Friday, except for Federal holidays.

The annual subscription price for the **Federal Register** paper edition is $555, or $607 for a combined **Federal Register**, Federal Register Index and List of CFR Sections Affected (LSA) subscription; the microfiche edition of the **Federal Register** including the Federal Register Index and LSA is $220. Six month subscriptions are available for one-half the annual rate. The charge for individual copies in paper form is $8.00 for each issue, or $8.00 for each group of pages as actually bound; or $1.50 for each issue in microfiche form. All prices include regular domestic postage and handling. International customers please add 25% for foreign handling. Remit check or money order, made payable to the Superintendent of Documents, or charge to your GPO Deposit Account, VISA or MasterCard. Mail to: New Orders, Superintendent of Documents, P.O. Box 371954, Pittsburgh, PA 15250–7954.

There are no restrictions on the republication of material appearing in the **Federal Register.**

How To Cite This Publication: Use the volume number and the page number. Example: 60 FR 12345.

SUBSCRIPTIONS AND COPIES

PUBLIC	
Subscriptions:	
Paper or fiche	**202–512–1800**
Assistance with public subscriptions	**512–1806**
General online information	**202–512–1530; 1–888–293–6498**
Single copies/back copies:	
Paper or fiche	**512–1800**
Assistance with public single copies	**512–1803**
FEDERAL AGENCIES	
Subscriptions:	
Paper or fiche	**523–5243**
Assistance with Federal agency subscriptions	**523–5243**

Printed on recycled paper containing 100% post consumer waste

Contents

Federal Register

Vol. 62, No. 131

Wednesday, July 9, 1997

Agricultural Marketing Service
RULES
Milk marketing orders:
Florida, 36650–36651
Spearmint oil produced in Far West, 36646–36650
PROPOSED RULES
Kiwifruit grown in California, 36743–36746

Agricultural Research Service
NOTICES
Patent licenses; non-exclusive, exclusive, or partially exclusive:
Kemin Industries, Inc., 36758

Agriculture Department
See Agricultural Marketing Service
See Agricultural Research Service
See Animal and Plant Health Inspection Service
See Forest Service

Air Force Department
NOTICES
Environmental statements; notice of intent:
Surplus Federal property—
Griffiss Air Force Base, NY; disposal and reuse, 36777
Senior Executive Service:
Perfomance Review Boards; membership, 36777–36778

Animal and Plant Health Inspection Service
RULES
Plant-related quarantine, domestic:
Gypsy moth, 36645–36646

Army Department
See Engineers Corps
NOTICES
Patent licenses; non-exclusive, exclusive, or partially exclusive:
Optical systems; eliminating undesirable reflections; et al., 36778
Optical waveguide based on the Talbot Effect, et al., 36778

Arts and Humanities, National Foundation
See National Foundation on the Arts and the Humanities

Centers for Disease Control and Prevention
NOTICES
Grants and cooperative agreements; availability, etc.:
Human Spongiform Encephalopathies; new diagnostic methods; research and development, 36824–36827
Meetings:
Disease, Disability, and Injury Prevention and Control special emphasis panels, 36827, 36828

Coast Guard
NOTICES
National preparedness for response exercise program; workshop and comment request, 36864–36865

Commerce Department
See Export Administration Bureau
See International Trade Administration
See National Oceanic and Atmospheric Administration

Comptroller of the Currency
PROPOSED RULES
Fiduciary activities of national banks:
Investment advisory activities, 36746–36747

Defense Department
See Air Force Department
See Army Department
See Engineers Corps
See Navy Department

Drug Enforcement Administration
NOTICES
Applications, hearings, determinations, etc.:
DeBlanco, Anne D., M.D., 36844–36845
Teegardin, Paul W., D.V.M., 36845–36846

Education Department
NOTICES
Grants and cooperative agreements; availability, etc.:
Centers for Independent Living, 36789

Energy Department
See Federal Energy Regulatory Commission
See Hearings and Appeals Office, Energy Department
NOTICES
Environmental statements; availability, etc.:
Yucca Mountain; disposal of spent nuclear fuel, 36789–36791

Engineers Corps
NOTICES
Committees; establishment, renewal, termination, etc.:
Inland Waterways Users Board, 36778–36779
Environmental statements; availability, etc.:
Chesapeake Bay, Queen Anne's County, MD; placement of Site 104 dredged material, 36779–36780
Dare County, NC; Manteo (Shallowbag) Bay channel improvement project, 36780–36781
Maui, HI; Maalaea Harbor navigation improvement project, 36781

Environmental Protection Agency
RULES
Air pollution; standards of performance for new stationary sources:
Municipal waste combustors—
Central Wayne Energy Recovery, L.P., MI, 36664–36665
Hazardous waste:
State underground storage program approvals—
District of Columbia, 36698–36699
Pesticides; tolerances in food, animal feeds, and raw agricultural commodities:
Azoxystrobin, 36684–36691
Fomesafen, 36678–36684
Imidacloprid, 36691–36698
Lambda-cyhalothrin, 36665–36671
Myclobutanil, 36671–36678

PROPOSED RULES
Air pollution; standards of performance for new stationary sources:
Nitrogen oxide emissions from new fossil-fuel fired steam generating units, 36948–36963
NOTICES
Hazardous waste:
Land disposal restrictions; exemptions—
Robstown, TX, 36804–36805
Meetings:
Antimicrobial rule development; stakeholders, 36805
Centralized waste treatment industry; standards and guidelines, 36805–36806
National Drinking Water Advisory Council, 36806
Pesticide registration, cancellation, etc.:
N. Jonas Inc., 36806–36807
Superfund program:
Prospective purchaser agreements—
Prier Brass Site, MO, 36807

Executive Office of the President
See Management and Budget Office

Export Administration Bureau
NOTICES
Meetings:
Regulations and Procedures Technical Advisory Committee, 36760–36761

Federal Aviation Administration
RULES
Airworthiness directives:
Cessna Aircraft Co., 36652–36655
PROPOSED RULES
Airworthiness directives:
General Dynamics (Convair), 36747–36749
NOTICES
Advisory circulars; availability, etc.:
Suspected unapproved parts; detecting and reporting, 36865
Exemption petitions; summary and disposition, 36865–36866
Meetings:
Aviation Rulemaking Advisory Committee, 36866–36867
RTCA, Inc., 36867
Passenger facility charges; applications, etc.:
Key West International Airport, FL, 36867

Federal Communications Commission
RULES
Radio stations; table of assignments:
Arkansas, 36703
Colorado, 36703–36704
Illinois, 36699, 36700
Maryland, 36702
Minnesota, 36701
Montana, 36702
Ohio, 36702–36703
Oklahoma, 36701–36702
Pennsylvania, 36701
Wyoming, 36699–36700
PROPOSED RULES
Common carrier services:
Competitive bidding procedures, 36752–36756
Radio stations; table of assignments:
Iowa, 36756–36757
Mississippi, 36756
NOTICES
Agency information collection activities:
Submission for OMB review; comment request, 36807–36808

Federal Emergency Management Agency
NOTICES
Meetings:
National Urban Search and Rescue Response System Advisory Committee, 36808

Federal Energy Regulatory Commission
RULES
Electric utilities (Federal Power Act):
Open access non discriminatory transmission services provided by public utilities—
Wholesale competition promotion; stranded costs recovery by public and transmitting utilities, 36657–36663
NOTICES
Applications, hearings, determinations, etc.:
ANR Pipeline Co., 36791–36792
Cleveland Electric Illuminating Co., 36792
Colorado Interstate Gas Co., 36792
Columbia Gas Transmission Corp., 36792–36793
Community Electric Power Agency, 36793
Eastern Shore Natural Gas Co., 36794
East Tennessee Natural Gas Co., 36793–36794
El Paso Natural Gas Co., 36794
Equitrans, L.P., 36794–36795
Florida Gas Transmission Co., 36795
Garden Banks Gas Pipeline, LLC, 36795
Granite State Gas Transmission, Inc., 36796
High Island Offshore System, 36796
Kern River Gas Transmission, 36796
KN Interstate Gas Transmission Co., 36796–36797
Midwestern Gas Transmission Co., 36797
National Fuel Gas Supply Corp., 36797
Nora Transmission Co., 36798
Northern Natural Gas Co., 36798–36799
Northwest Pipeline Corp., 36799–36800
Pacific Gas Transmission Co., 36800
Questar Pipeline Co., 36800
Tennessee Gas Pipeline Co., 36800–36801
Texas Gas Transmission Corp., 36801
U-T Offshore System, 36801
Viking Gas Transmission Co., 36801–36802
Williams Natural Gas Co., 36802
Williston Basin Interstate Pipeline Co., 36802

Federal Highway Administration
NOTICES
Environmental statements; notice of intent:
Kennebec County, ME, 36868

Federal Reserve System
NOTICES
Banks and bank holding companies:
Change in bank control, 36809
Formations, acquisitions, and mergers, 36809
Permissible nonbanking activities, 36809

Food and Drug Administration
PROPOSED RULES
Food for human consumption:
Food labeling—
Dietary sugar alcohols and dental caries; health claims, 36749–36752

NOTICES
Committees; establishment, renewal, termination, etc.:
Medical Devices Advisory Committee et al.; membership nominations, 36828–36832
Grants and cooperative agreements; availability, etc.:
Orphan drug products; safety and effectiveness in rare diseases and conditions; clinical studies, 36832–36836
Guidance documents:
Industry: Expiration Dating and Stability Testing of Solid Oral Dosage Form Drugs Containing Iron; availability, 36836–36837
Meetings:
Folate intake; dissemination of public health message, 36837

Forest Service
NOTICES
Agency information collection activities:
Proposed collection; comment request, 36758–36759
Environmental statements; availability, etc.:
Grand Mesa, Uncompahgre, and Gunnison National Forests, Mesa County, CO; Sheep Flats Diversity Unit timber sales, 36759–36760
Meetings:
Southwest Washington Provincial Advisory Committee, 36760

Health and Human Services Department
See Centers for Disease Control and Prevention
See Food and Drug Administration
See Health Resources and Services Administration
See Substance Abuse and Mental Health Services Administration
NOTICES
Antiretroviral drug use by HIV-1-infected pregnant women; guidelines; comment request, 36809–36823
Meetings:
Consumer Protection and Quality in the Health Care Industry Advisory Commission, 36823
Organization, functions, and authority delegations:
Program Support Center, 36823–36824

Health Resources and Services Administration
NOTICES
Grants and cooperative agreements; availability, etc.:
Nursing education loan repayment program, 36837–36838

Hearings and Appeals Office, Energy Department
NOTICES
Decisions and orders, 36802–36804

Housing and Urban Development Department
NOTICES
Agency information collection activities:
Proposed collection; comment request, 36839
Submission for OMB review; comment request, 36839–36840

Immigration and Naturalization Service
NOTICES
Agency information collection activities:
Proposed collection; comment request, 36846–36847

Indian Affairs Bureau
NOTICES
Agency information collection activities:
Submission for OMB review; comment request, 36840–36841

Interior Department
See Indian Affairs Bureau
See Land Management Bureau
See National Park Service
See Reclamation Bureau
NOTICES
Pony Express National Historic Trail:
Sacramento-San Francisco Pony Express route, 36840

International Development Cooperation Agency
See Overseas Private Investment Corporation

International Trade Administration
NOTICES
Antidumping:
Circular welded non-alloy steel pipe from—
Korea, 36761–36764
Tapered roller bearing and parts, finished and unfinished from—
China, 36764–36771
Countervailing duties:
Agricultural tillage tools from—
Brazil, 36771–36772
Fresh Atlantic Salmon from—
Chile, 36772–36775

International Trade Commission
NOTICES
Import investigations:
Toothbrushes and packages thereof, 36843

Justice Department
See Drug Enforcement Administration
See Immigration and Naturalization Service
See Justice Programs Office
NOTICES
Agency information collection activities:
Submission for OMB review; comment request, 36843–36844
Pollution control; consent judgments:
Velsicol Chemical Corp., 36844

Justice Programs Office
NOTICES
Agency information collection activities:
Proposed collection; comment request, 36847–36848
Grant and cooperative agreement awards:
Domestic violence; model definitions and data collection protocols for statistical data, 36848–36849

Labor Department
See Occupational Safety and Health Administration

Land Management Bureau
NOTICES
Realty actions; sales, leases, etc.:
Nevada, 36841–36842
Survey plat filings:
California; correction, 36872

Management and Budget Office
NOTICES
Racial and ethnic classification standards; recommendations from Interagency Committee concerning changes, 36874–36946

Maritime Administration
NOTICES
Applications, hearings, determinations, etc.:
American President Lines, Ltd., 36868–36869

National Aeronautics and Space Administration
RULES
Acquisition regulations:
FAR supplement (NFS); rewrite, 36704–36738

National Archives and Records Administration
NOTICES
Agency strategic plan; availability and request for comments, 36851

National Foundation on the Arts and the Humanities
NOTICES
Meetings:
Humanities National Council, 36851–36852

National Oceanic and Atmospheric Administration
RULES
Fishery conservation and management:
Alaska; fisheries of Exclusive Economic Zone—
Greenland turbot, 36739
Northern rockfish, 36740
Pacific ocean perch, 36739–36742
Rockfish, 36741
Northeastern United States fisheries—
Scup, 36738–36739
Ocean and coastal resource management:
Marine sanctuaries—
Florida Keys National Marine Sanctuary, 36655–36657
PROPOSED RULES
Tuna, Atlantic bluefin fisheries
Correction, 36872
NOTICES
Meetings:
National Pacific Fishery Management Council, 36776
Western Pacific Fishery Management Council, 36776–36777

National Park Service
NOTICES
National Register of Historic Places:
Pending nominations, 36842

Navy Department
NOTICES
Base realignment and closure:
Surplus Federal property—
Naval Air Station, Barbers Point, HI; closure and reuse, 36782
Palos Verdes Navy Housing, Los Angeles, CA; reuse, 36782–36783
San Pedro Navy Housing, Los Angeles, CA, 36783–36784
Environmental statements; availability, etc.:
Base realignment and closure—
Camp LeJeune, NC, 36784–36785
Naval Base Philadelphia; disposal and reuse, 36785–36789

Northeast Dairy Compact Commission
RULES
Compact over-order price regulations; proceedings or petitions to modify or exempt
Correction, 36651–36652

Nuclear Regulatory Commission
NOTICES
Environmental statements; availability, etc.:
Wisconsin Electric Power Co., 36852–36853
Meetings; Sunshine Act, 36853–36854

Occupational Safety and Health Administration
NOTICES
Agency information collection activities:
Proposed collection; comment request, 36849–36851

Office of Management and Budget
See Management and Budget Office

Overseas Private Investment Corporation
NOTICES
Agency information collection activities:
Proposed collection; comment request, 36843

Pension Benefit Guaranty Corporation
RULES
Premium payments:
Premium filings-rated information; submission of records, 36663–36664

Public Health Service
See Centers for Disease Control and Prevention
See Food and Drug Administration
See Health Resources and Services Administration
See Substance Abuse and Mental Health Services Administration

Reclamation Bureau
NOTICES
Grants and cooperative agreements; availability, etc.:
Grand Canyon Monitoring and Research Center—
Research and data collection activities, 36842

Securities and Exchange Commission
NOTICES
Self-regulatory organizations; proposed rule changes:
Chicago Board Options Exchange, Inc., 36854–36855
National Association of Securities Dealers, Inc., 36855–36860
Pacific Exchange, Inc., 36860–36862

Small Business Administration
NOTICES
Agency information collection activities:
Submission for OMB review; comment request, 36862–36863
Disaster loan areas:
Kentucky, 36863
Minnesota, 36863
North Dakota, 36863

State Department
NOTICES
Privacy Act:
Systems of records, 36863–36864

Substance Abuse and Mental Health Services Administration
NOTICES
Meetings:
SAMHSA National Advisory Council, 36838
SAMHSA special emphasis panels, 36839

Surface Transportation Board
NOTICES
Agency information collection activities:
Submission for OMB review; comment request, 36869
Railroad operation, acquisition, construction, etc.:
Burlington Northern and Santa Fe Railway Co., et al., 36869
Texas Mexican Railway Co., et al., 36869–36870

Transportation Department
See Coast Guard
See Federal Aviation Administration
See Federal Highway Administration
See Maritime Administration
See Surface Transportation Board

Treasury Department
See Comptroller of the Currency
NOTICES
Committees; establishment, renewal, termination, etc.:
Treasury Borrowing Advisory Committee, 36870–36871

Separate Parts In This Issue

Part II
Office of Management and Budget, 36874–36946

Part III
Environmental Protection Agency, 36948–36963

Reader Aids
Additional information, including a list of public laws, telephone numbers, reminders, and finding aids, appears in the Reader Aids section at the end of this issue.

Electronic Bulletin Board
Free **Electronic Bulletin Board** service for Public Law numbers, **Federal Register** finding aids, and a list of documents on public inspection is available on 202–275–1538 or 275–0920.

CFR PARTS AFFECTED IN THIS ISSUE

A cumulative list of the parts affected this month can be found in the Reader Aids section at the end of this issue.

7 CFR
301.....36645
985.....36646
1006.....36650
1381.....36651
Proposed Rules:
920.....36743

12 CFR
Proposed Rules:
9.....36746

14 CFR
39.....36652
Proposed Rules:
39.....36747

15 CFR
922.....36655

18 CFR
35.....36657

21 CFR
Proposed Rules:
101.....36749

29 CFR
4007.....36663

40 CFR
60.....36664
180 (5 documents) 36665, 36671, 36678, 36684, 36691
281.....36698
Proposed Rules:
60.....36948

47 CFR
73 (12 documents) 36699, 36700, 36701, 36702, 36703
Proposed Rules:
Ch. I.....36752
73 (2 documents) 36756

48 CFR
1803.....36704
1804.....36704
1807.....36704
1809.....36704
1813.....36704
1815.....36704
1816.....36704
1819.....36704
1822.....36704
1824.....36704
1825.....36704
1827.....36704
1832.....36704
1836.....36704
1837.....36704
1839.....36704
1842.....36704
1844.....36704
1845.....36704
1852.....36704
1853.....36704
1870.....36704

50 CFR
648.....36738
679 (5 documents) 36739, 36740, 36741
Proposed Rules:
285.....36872

Rules and Regulations

Federal Register
Vol. 62, No. 131
Wednesday, July 9, 1997

This section of the FEDERAL REGISTER contains regulatory documents having general applicability and legal effect, most of which are keyed to and codified in the Code of Federal Regulations, which is published under 50 titles pursuant to 44 U.S.C. 1510.

The Code of Federal Regulations is sold by the Superintendent of Documents. Prices of new books are listed in the first FEDERAL REGISTER issue of each week.

DEPARTMENT OF AGRICULTURE

Animal and Plant Health Inspection Service

7 CFR Part 301

[Docket No. 97–038–2]

Gypsy Moth Generally Infested Areas

AGENCY: Animal and Plant Health Inspection Service, USDA.

ACTION: Interim rule and request for comments.

SUMMARY: We are amending the gypsy moth quarantine and regulations by adding areas in Ohio and West Virginia to the list of generally infested areas. These changes affect six areas in Ohio and five areas in West Virginia. These actions are necessary in order to impose certain restrictions on the interstate movement of regulated articles to prevent the artificial spread of gypsy moth.

DATES: Interim rule effective July 9, 1997. Consideration will be given only to comments received on or before September 8, 1997.

ADDRESSES: Please send an original and three copies of your comments to Docket No. 97–038–2, Regulatory Analysis and Development, PPD, APHIS, Suite 3C03, 4700 River Road, Unit 118, Riverdale, MD 20737–1238. Please state that your comments refer to Docket No. 97–038–2. Comments received may be inspected at USDA, room 1141, South Building, 14th Street and Independence Avenue SW., Washington, DC, between 8 a.m. and 4:30 p.m., Monday through Friday, except holidays. Persons wishing to inspect comments are requested to call ahead on (202) 690–2817 to facilitate entry into the comment reading room.

FOR FURTHER INFORMATION CONTACT: Ms. Coanne E. O'Hern, Operations Officer, Domestic and Emergency Programs, PPQ, APHIS, suite 4C10, 4700 River Road Unit 134, Riverdale, MD 20737–1236, (301) 734–8247, or e-mail cohern@aphis.udsa.gov.

SUPPLEMENTARY INFORMATION:

Background

The gypsy moth, *Lymantria dispar* (Linnaeus), is a destructive pest of forest and shade trees. The gypsy moth regulations (contained in 7 CFR 301.45 through 301.45–12, and referred to below as the regulations), quarantine certain States because of the gypsy moth, and restrict the interstate movement of certain articles from generally infested areas in the quarantined States to prevent the artificial spread of the gypsy moth.

In accordance with § 301.45–2 of the regulations, generally infested areas are, with certain exceptions, those areas in which a gypsy moth general infestation has been found by an inspector, or each portion of a State which the Administrator deems necessary to regulate because of its proximity to infestation or its inseparability for quarantine enforcement purposes from infested localities. Less than an entire State will be designated as a generally infested area only if: (1) The State has adopted and is enforcing a quarantine or regulation which imposes restrictions on the intrastate movement of the regulated articles which are substantially the same as those which are imposed with respect to the interstate movement of such articles; and, (2) the designation of less than the entire State as a generally infested area will be adequate to prevent the artificial interstate spread of infestations of the gypsy moth.

Designation of Areas as Generally Infested Areas

We are amending § 301.45–3(a) of the regulations, which lists generally infested areas, by adding Belmont, Coshocton, Harrison, Holmes, Monroe, and Tuscarawas Counties in Ohio; and Doddridge, Harrison, Lewis, Tyler, and Upshur Counties in West Virginia to the list of generally infested areas.

We are taking this action because, in cooperation with the States, the United States Department of Agriculture conducted surveys that detected all life stages of the gypsy moth in these areas. Based on these surveys, we determined that reproducing populations exist at significant levels in these areas. Eradication of these populations is not considered feasible because these areas are immediately adjacent to areas currently recognized to be generally infested and therefore subject to continued reinfestation.

Emergency Action

The Administrator of the Animal and Plant Health Inspection Service has determined that an emergency exists that warrants publication of this interim rule without prior opportunity for public comment. Immediate action is necessary because of the possibility that the gypsy moth could be spread artificially to noninfested areas of the United States, where it could cause economic loss due to defoliation of susceptible forest and shade trees.

Because prior notice and other public procedures with respect to this action are impracticable and contrary to the public interest under these conditions, we find good cause under 5 U.S.C. 553 to make it effective upon publication in the **Federal Register**. We will consider comments that are received within 60 days of publication of this rule in the **Federal Register**. After the comment period closes, we will publish another document in the **Federal Register**. It will include a discussion of any comments we receive and any amendments we are making to the rule as a result of the comments.

Executive Order 12866 and Regulatory Flexibility Act

This rule has been reviewed under Executive Order 12866. For this action, the Office of Management and Budget has waived its review process required by Executive Order 12866.

This action amends the list of generally infested areas under the gypsy moth quarantine and regulations by adding areas in Ohio and West Virginia. Immediate action is necessary in order to prevent the artificial spread of gypsy moth to noninfested areas of the United States.

This emergency situation makes compliance with section 603 and timely compliance with section 604 of the Regulatory Flexibility Act (5 U.S.C. 601 *et seq.*) impracticable. If we determine that this rule would have a significant economic impact on a substantial number of small entities, then we will discuss the issues raised by section 604 of the Regulatory Flexibility Act in our Final Regulatory Flexibility Analysis.

Executive Order 12372

This program/activity is listed in the Catalog of Federal Domestic Assistance under No. 10.025 and is subject to Executive Order 12372, which requires intergovernmental consultation with State and local officials. (See 7 CFR part 3015, subpart V.)

Executive Order 12988

This rule has been reviewed under Executive Order 12988, Civil Justice Reform. This rule: (1) Preempts all State and local laws and regulations that are inconsistent with this rule; (2) has no retroactive effect; and (3) does not require administrative proceedings before parties may file suit in court challenging this rule.

Paperwork Reduction Act

This rule contains no information collection or recordkeeping requirements under the Paperwork Reduction Act of 1995 (44 U.S.C. 3501 *et seq.*).

List of Subjects in 7 CFR Part 301

Agricultural commodities, Plant diseases and pests, Quarantine, Reporting and recordkeeping requirements, Transportation.

Accordingly, 7 CFR part 301 is amended as follows:

PART 301—DOMESTIC QUARANTINE NOTICES

1. The authority citation for part 301 continues to read as follows:

Authority: 7 U.S.C. 147a, 150bb, 150dd, 150ee, 150ff, 161, 162, and 164–167; 7 CFR 2.22, 2.80, and 371.2(c).

2. In § 301.45–3, paragraph (a) is amended by adding areas in the entries for Ohio and West Virginia, in alphabetical order, to read as follows:

§ 301.45–3 Generally infested areas.

(a) * * *

Ohio

* * * * *

Belmont County. The entire county.

* * * * *

Coshocton County. The entire county.

* * * * *

Harrison County. The entire county.

Holmes County. The entire county.

* * * * *

Monroe County. The entire county.

* * * * *

Tuscarawas County. The entire county.

* * * * *

West Virginia

* * * * *

Doddridge County. The entire county.

* * * * *

Harrison County. The entire county.

* * * * *

Lewis County. The entire county.

* * * * *

Tyler County. The entire county.

Upshur County. The entire county.

* * * * *

Done in Washington, DC, this 1st day of July 1997.

Craig A. Reed,

Acting Administrator, Animal and Plant Health Inspection Service.

[FR Doc. 97–17863 Filed 7–8–97; 8:45 am]

BILLING CODE 3410–34–P

DEPARTMENT OF AGRICULTURE

Agricultural Marketing Service

7 CFR Part 985

[Docket No. FV–96–985–4 FR]

Spearmint Oil Produced in the Far West; Salable Quantities and Allotment Percentages for the 1997–98 Marketing Year

AGENCY: Agricultural Marketing Service, USDA.

ACTION: Final rule.

SUMMARY: This final rule establishes the quantity of spearmint oil produced in the Far West, by class, that handlers may purchase from, or handle for, producers during the 1997–98 marketing year. The Spearmint Oil Administrative Committee (Committee), the agency responsible for local administration of the marketing order for spearmint oil produced in the Far West, recommended this rule for the purpose of avoiding extreme fluctuations in supplies and prices, thus helping to maintain stability in the spearmint oil market.

DATES: This final rule becomes effective July 10, 1997 and applies to all spearmint oil handled from the beginning of the 1997–98 marketing year.

FOR FURTHER INFORMATION CONTACT: Robert J. Curry, Northwest Marketing Field Office, Marketing Order Administration Branch, Fruit and Vegetable Division, AMS, USDA, 1220 SW Third Avenue, room 369, Portland, Oregon 97204; telephone: (503) 326–2043; Fax: (503) 326–7440; or Anne M. Dec, Marketing Order Administration Branch, Fruit and Vegetable Division, AMS, USDA, room 2525, South Building, P.O. Box 96456, Washington, D.C. 20090–6456; telephone: (202) 720–2491; Fax: (202) 720–5698. Small businesses may request information on compliance with this regulation by contacting: Jay Guerber, Marketing Order Administration Branch, Fruit and Vegetable Division, AMS, USDA, P.O. Box 96456, room 2523–S, Washington, DC 20090–6456; telephone (202) 720–2491; Fax (202) 720–5698.

SUPPLEMENTARY INFORMATION: This final rule is issued under Marketing Order No. 985 (7 CFR Part 985), as amended, regulating the handling of spearmint oil produced in the Far West (Washington, Idaho, Oregon, and designated parts of Nevada and Utah), hereinafter referred to as the ''order.'' This order is effective under the Agricultural Marketing Agreement Act of 1937, as amended (7 U.S.C. 601–674), hereinafter referred to as the ''Act.''

The Department of Agriculture (Department) is issuing this rule in conformance with Executive Order 12866.

This final rule has been reviewed under Executive Order 12988, Civil Justice Reform. Under the provisions of the marketing order now in effect, salable quantities and allotment percentages may be established for classes of spearmint oil produced in the Far West. This final rule establishes the quantity of spearmint oil produced in the Far West, by class, that may be purchased from or handled for producers by handlers during the 1997–98 marketing year, which begins on June 1, 1997. This final rule will not preempt any State or local laws, regulations, or policies, unless they present an irreconcilable conflict with this rule.

The Act provides that administrative proceedings must be exhausted before parties may file suit in court. Under section 608c(15)(A) of the Act, any handler subject to an order may file with the Secretary a petition stating that the order, any provision of the order, or any obligation imposed in connection with the order is not in accordance with law and request a modification of the order or to be exempted therefrom. A handler is afforded the opportunity for a hearing on the petition. After the hearing the Secretary would rule on the petition. The Act provides that the district court of the United States in any district in which the handler is an inhabitant, or has his or her principal place of business, has jurisdiction to review the Secretary's ruling on the petition, provided an action is filed not later than 20 days after date of the entry of the ruling.

Pursuant to authority contained in §§ 985.50, 985.51, and 985.52 of the order, the Committee recommended the salable quantities and allotment

percentages for the 1997–98 marketing year at its October 2, 1996, meeting, and reconfirmed its recommendation following review of additional information at its meeting held on November 14, 1996. The Committee recommended the establishment of a salable quantity and allotment percentage for Scotch spearmint oil with one member opposing the motion because he favored the establishment of a higher salable quantity and allotment percentage. In a unanimous vote, the Committee recommended the establishment of a salable quantity and allotment percentage for Native spearmint oil.

This final rule establishes a salable quantity of 996,522 pounds and an allotment percentage of 55 percent for Scotch spearmint oil, and a salable quantity of 1,125,351 pounds and an allotment percentage of 56 percent for Native spearmint oil. This rule limits the amount of spearmint oil that handlers may purchase from, or handle for, producers during the 1997–98 marketing year, which begins on June 1, 1997. Salable quantities and allotment percentages have been placed into effect each season since the order's inception in 1980.

The U.S. production of spearmint oil is concentrated in the Far West, primarily Washington, Idaho, and Oregon (part of the area covered by the order). Spearmint oil is also produced in the Midwest. The production area covered by the order accounts for approximately 75 percent of the annual U.S. production of both classes of spearmint oil.

When the order became effective in 1980, the United States produced nearly 100 percent of the world's supply of Scotch spearmint oil, of which approximately 80 percent was produced in the regulated production area in the Far West. International production characteristics have changed in recent years, however, with foreign Scotch spearmint oil production contributing significantly to world production. Although still a leader in production, the Far West's market share has decreased to approximately 65 percent of the world total. Thus, in recent marketing years, the Committee has taken a different approach in its method of addressing the historical fluctuations in supply and price. In conjunction with the goal of maintaining price and market stability, the Committee seeks a moderate growth rate in terms of total North American market share. The Committee's recommendation is intended to find a stable price level while keeping Far West Scotch spearmint oil in a competitive and viable position in the international market. To that end, the Committee is targeting a specific percentage of the North American market share for use in its salable quantity and allotment percentage calculations. For 1997–98, the Committee is targeting 73 percent of the North American market, compared to the nearly 65 percent targeted for the 1996–97 season. Preliminary figures indicate that the Far West Scotch spearmint oil market share in North America will reach approximately 60 percent in 1996–97, up from 55 percent in 1995–96.

The order has contributed extensively to the stabilization of producer prices, which prior to 1980 experienced wide fluctuations from year to year. For example, between 1971 and 1975 the price of Native spearmint oil ranged from $3.00 per pound to $11.00 per pound. In contrast, under the order, prices have stabilized between $10.50 and $11.50 per pound for the past ten years. With approximately 90 percent of U.S. production of Native spearmint oil located in the Far West, the method of calculating the Native spearmint oil salable quantity and allotment percentage primarily utilizes information on price and available supply as they are affected by the estimated trade demand for Far West Native spearmint oil.

The salable quantity and allotment percentage for each class of spearmint oil for the 1997–98 marketing year is based upon the Committee's recommendation and the data presented below.

(1) Class 1 (Scotch) Spearmint Oil

(A) Estimated carry-in on June 1, 1997—309,927 pounds. This figure is derived by subtracting the estimated 1996–97 marketing year trade demand of 900,000 pounds from the revised 1996–97 marketing year total available supply of 1,209,927 pounds.

(B) Estimated North American production (U.S. and Canada) for the 1997–98 marketing year—1,511,461 pounds. This figure is an estimate based on information provided to the Committee by producers and buyers.

(C) Percentage of North American market targeted—73 percent. This figure is an approximate average of the recommended target percentages made at each of the five regional producer meetings held throughout the Far West production area during the month of September, 1996.

(D) Total quantity of Scotch spearmint oil needed to reach targeted percentage—1,103,367 pounds. This figure is the product of the estimated 1997–98 North American production and the targeted percentage.

(E) Minimum amount desired to have on hand throughout the season—200,000 pounds. Producers at all of the five regional meetings had recommended this amount, which continues to reflect the Committee's commitment to regain market share by maintaining a minimum quantity on hand.

(F) Total supply required—1,303,367 pounds. This figure is derived by adding the minimum desired on hand amount to the total quantity required to meet the targeted percentage.

(G) Additional quantity required—993,440 pounds. This figure represents the actual amount of additional or new oil needed to meet the Committee's projections, and is computed by subtracting the estimated carry-in of 309,927 pounds from the total supply required of 1,303,367 pounds.

(H) Total allotment base for the 1997–98 marketing year—1,811,859 pounds.

(I) Computed allotment percentage—54.8 percent. This percentage is computed by dividing the required salable quantity by the total allotment base.

(J) Recommended allotment percentage—55 percent. This is the Committee's recommendation based on the computed allotment percentage.

(K) The Committee's recommended salable quantity—996,522 pounds. This figure is the product of the recommended allotment percentage and the total 1997–98 allotment base.

(2) Class 3 (Native) Spearmint Oil

(A) Estimated carry-in on June 1, 1997—71,764 pounds. This figure is derived by subtracting the estimated 1996–97 marketing year trade demand of 1,162,500 pounds from the revised 1996–97 marketing year total available supply of 1,234,264 pounds.

(B) Estimated trade demand (domestic and export) for the 1997–98 marketing year—1,212,500 pounds. This figure represents an average of buyer estimates and the amounts recommended at the regional producer meetings.

(C) Salable quantity required from 1997 production—1,140,736 pounds. This figure is the difference between the estimated 1997–98 marketing year trade demand and the estimated carry-in on June 1, 1997.

(D) Total allotment base for the 1997–98 marketing year—2,009,556 pounds.

(E) Computed allotment percentage—56.8 percent. This percentage is computed by dividing the required salable quantity by the total allotment base.

(F) Recommended allotment percentage—56 percent. This is the

Committee's recommendation based on the computed allotment percentage.

(G) The Committee's recommended salable quantity—1,125,351 pounds. This figure is the product of the recommended allotment percentage and the total 1997–98 marketing year allotment base.

The salable quantity is the total quantity of each class of oil which handlers may purchase from or handle on behalf of producers during a marketing year. Each producer is allotted a share of the salable quantity by applying the allotment percentage to the producer's allotment base for the applicable class of spearmint oil.

The Committee's recommended Scotch spearmint oil salable quantity of 996,522 pounds and allotment percentage of 55 percent are based on anticipated supply, demand, and a targeted percentage of the North American market during the 1997–98 marketing year. The Committee's recommended Native spearmint oil salable quantity of 1,125,351 pounds and allotment percentage of 56 percent are based on anticipated supply and trade demand during the 1997–98 marketing year. The salable quantities are not expected to cause a shortage of spearmint oil supplies. Any unanticipated or additional market demand for spearmint oil which may develop during the marketing year can be satisfied by an increase in the salable quantities. Both Scotch and Native spearmint oil producers who produce more than their annual allotments during the 1997–98 season may transfer such excess spearmint oil to a producer with spearmint oil production less than his or her annual allotment or put it into the reserve pool.

This regulation is similar to those which have been issued in prior seasons. Costs to producers and handlers resulting from this action are expected to be offset by the benefits derived from a stable market, a greater market share, and possible improved returns. In conjunction with the issuance of this rule, the Committee's marketing policy statement for the 1997–98 marketing year has been reviewed by the Department. The Committee's marketing policy, a requirement whenever the Committee recommends volume regulations, fully meets the intent of section 985.50 of the order. During its discussion of potential 1997–98 salable quantities and allotment percentages, the Committee considered: (1) The estimated quantity of salable oil of each class held by producers and handlers; (2) the estimated demand for each class of oil; (3) prospective production of each class of oil; (4) total of allotment bases of each class of oil for the current marketing year and the estimated total of allotment bases of each class for the ensuing marketing year; (5) the quantity of reserve oil, by class, in storage; (6) producer prices of oil, including prices for each class of oil; and (7) general market conditions for each class of oil, including whether the estimated season average price to producers is likely to exceed parity. Conformity with the Department's ''Guidelines for Fruit, Vegetable, and Specialty Crop Marketing Orders'' has also been reviewed and confirmed.

The establishment of these salable quantities and allotment percentages allow for anticipated market needs. In making its recommendation, the Committee reviewed available information including historical sales and changes and trends in production and demand. This rule also provides spearmint oil producers with information on the amount of oil which should be produced for next season in order to meet anticipated market demand.

Pursuant to requirements set forth in the Regulatory Flexibility Act (RFA), the Agricultural Marketing Service (AMS) has considered the economic impact of this action on small entities. Accordingly, the AMS has prepared this final regulatory flexibility analysis.

The purpose of the RFA is to fit regulatory actions to the scale of business subject to such actions in order that small businesses will not be unduly or disproportionately burdened. Marketing orders issued pursuant to the Act, and rules issued thereunder, are unique in that they are brought about through group action of essentially small entities acting on their own behalf. Thus, both statutes have small entity orientation and compatibility.

There are 8 spearmint oil handlers subject to regulation under the order and approximately 250 producers of spearmint oil in the regulated production area. Of the 250 producers, approximately 135 producers hold Class 1 (Scotch) spearmint oil allotment base, and approximately 115 producers hold Class 3 (Native) spearmint oil allotment base. Small agricultural service firms are defined by the Small Business Administration (SBA)(13 CFR 121.601) as those having annual receipts of less than $5,000,000, and small agricultural producers have been defined as those whose annual receipts are less than $500,000.

Based on the SBA's definition of small entities, the Committee estimates that none of the eight handlers regulated by the order would be considered small entities. All of the handlers are large corporations involved in the international trading of essential oils and the products of essential oils. Further, the Committee estimates that 17 of the 135 Scotch spearmint oil producers and 10 of the 115 Native spearmint oil producers would be classified as small entities under the SBA definition. Thus, a majority of handlers and producers of Far West spearmint oil may not be classified as small entities.

The Far West spearmint oil industry is characterized by producers whose farming operations generally involve more than one commodity, and whose income from farming operations is not exclusively dependent on the production of spearmint oil. Crop rotation is an essential cultural practice in the production of spearmint oil for weed, insect, and disease control. A normal spearmint oil producing operation would have enough acreage for rotation such that the total acreage required to produce the crop would be about one-third spearmint and two-thirds rotational crops. An average spearmint oil producing farm would thus have to have considerably more acreage than would be planted to spearmint during any given season. Most spearmint oil producing farms would fall into the SBA category of large businesses in order to remain economically viable due to the added costs associated with the production of spearmint oil.

This final rule establishes the quantity of spearmint oil produced in the Far West, by class, that handlers may purchase from, or handle for, producers during the 1997–98 marketing year. The Committee recommended this rule for the purpose of avoiding extreme fluctuations in supplies and prices, and thus help to maintain stability in the spearmint oil market. This action is authorized by the provisions of §§ 985.50, 985.51 and 985.52 of the order.

Small spearmint oil producers generally are not extensively diversified and as such are more at risk to market fluctuations. Such small farmers generally need to market their entire annual crop and do not have the luxury of having other crops to cushion seasons with poor spearmint oil returns. Conversely, large diversified producers have the potential to endure one or more seasons of poor spearmint oil markets because incomes from alternate crops could support the operation for a period of time. Being reasonably assured of a stable price and market provides small producing entities with the ability to maintain proper cash flow and to

meet annual expenses. Thus, the market and price stability provided by the order potentially benefit the small producer more than such provisions benefit large producers. Even though a majority of handlers and producers of spearmint oil may not be classified as small entities, the volume control feature of this order has small entity orientation.

The order has contributed extensively to the stabilization of producer prices, which prior to 1980 experienced wide fluctuations from year to year. For example, between 1971 and 1975 the price of Native spearmint oil ranged from $3.00 per pound to $11.00 per pound. In contrast, under the order, prices have stabilized between $10.50 and $11.50 per pound for the past ten years.

Alternatives to the proposal included not regulating the handling of spearmint oil during the 1997–98 marketing year, and recommending either higher or lower salable quantities and allotment percentages. The Committee reached its recommendation to establish salable quantities and allotment percentages for both classes of oil after careful consideration of available information, including: (1) The estimated quantity of salable oil of each class held by producers and handlers; (2) the estimated demand for each class of oil; (3) prospective production of each class of oil; (4) total of allotment bases of each class of oil for the current marketing year and the estimated total of allotment bases of each class for the ensuing marketing year; (5) the quantity of reserve oil, by class, in storage; (6) producer prices of oil, including prices for each class of oil; and (7) general market conditions for each class of oil, including whether the estimated season average price to producers is likely to exceed parity. Based on its review, the Committee believes that the salable quantity and allotment percentage levels recommended will achieve the objectives sought.

Without any regulations in effect, the Committee believes the industry would return to the pattern of cyclical prices of prior years, as well as suffer the potentially price depressing consequence that a release of the nearly 1,300,000 pounds of spearmint oil reserves would have on the market. According to the Committee, higher or lower salable quantities and allotment percentages would not achieve the intended balance between market and price stability, and market share maintenance and growth.

Annual salable quantities and allotment percentages have been issued for both classes of spearmint oil since the order's inception. Reporting and recordkeeping requirements have remained the same for each year of regulation. Accordingly, this action will not impose any additional reporting or recordkeeping requirements on either small or large spearmint oil producers and handlers. All reports and forms associated with this program are reviewed periodically in order to avoid unnecessary and duplicative information collection by industry and public sector agencies. The Department has not identified any relevant Federal rules that duplicate, overlap, or conflict with this final rule.

A proposed rule was published in the **Federal Register** (62 FR 942) on January 7, 1997. A 30-day comment period was provided to allow interested persons the opportunity to respond to the proposal, including any regulatory and informational impacts of this action on small businesses. Copies of the rule were faxed and mailed to the Committee office, which in turn notified Committee members and spearmint oil producers and handlers of the proposed action. In addition, the Committee's meetings were widely publicized throughout the spearmint oil industry and all interested persons were invited to attend and participate on all issues. A copy of the proposal was also made available on the Internet by the U.S. Government Printing Office.

One comment was received from the U.S. Small Business Administration, Office of Advocacy, regarding the Department's initial regulatory flexibility analysis (IRFA). The SBA noted that a brief overview of the facts supported the Department's decision not to certify the proposal as not having a significant economic impact on a substantial number of small entities. Further, SBA was of the view that AMS should flesh out some of its assumptions and statements.

The assumptions and statements of concern to SBA include references to the fact that records show that the marketing order has contributed extensively to the stabilization of grower prices, which prior to 1980 experienced wide fluctuations from year to year. The commenter questioned whether current information suggested that the spearmint oil market would experience instability under today's market conditions without the order. Also, based upon the statement in the IRFA that the Committee reached its recommendation to establish salable quantities and allotment percentages after careful consideration of all available information, the commenter was of the view that the Committee seemed to be privy to information not contained in the proposed rule. SBA went on to raise questions concerning alternative allotment percentages and quantities of spearmint oil producers must have in order to survive.

As noted earlier in the regulatory flexibility analysis, the market and price stability provided by the order potentially benefit the small producer more than such provisions benefit large producers. Although a majority of handlers and producers of spearmint oil may not be classified as small entities, the volume control feature of this order has small entity orientation. Furthermore, were salable quantity and allotment percentage regulations not issued, the Committee believes the industry would return to the pattern of cyclical prices of prior years, as well as potentially suffer the significant, and likely negative economic impact that a release of the nearly 1,300,000 pounds of spearmint oil reserves would have on the market.

In accordance with § 985.50 of the order, the Committee is required to submit on an annual basis to the Secretary recommendations for volume regulations deemed necessary to meet market requirements and establish orderly market conditions. In determining a marketing policy, the Committee is required to consider certain factors including but not limited to (1) the estimated quantity of salable oil of each class held by producers and handlers; (2) the estimated demand for each class of oil; (3) prospective production of each class of oil; (4) total of allotment bases of each class of oil for the current marketing year and the estimated total of allotment bases of each class for the ensuing marketing year; (5) the quantity of reserve oil, by class, in storage; (6) producer prices of oil, including prices for each class of oil; and (7) general market conditions for each class of oil, including whether the estimated season average price to producers is likely to exceed parity.

The information available to the Committee includes just such information as is contained in the marketing policy which is developed by the Committee. At the public meetings held prior to the Committee's recommendation for the 1997–98 marketing year salable quantities and allotment percentages, the marketing policy was considered and discussed. Further, discussion of the history of the marketing order and market conditions from 1980 to the present represents some of the background and experience that is brought to bear in arriving at a recommendation for regulation. In making its recommendation, the Committee looked at and considered current and prospective marketing

conditions to determine whether the marketing policy considerations indicated a need for limiting the quantity of spearmint oil in a particular class.

Finally, the SBA questioned why the proposed rule did not contain reference to the number of new producers who will be allocated base of sufficient quantity so as to ensure their entry into the industry next season. The procedures for determining how new producers are selected and how additional allotment bases are distributed is provided for in §§ 985.53 and 985.153 of the order and its regulations and is separate from this action. Under these provisions, an additional ½ percent of the current total allotment base for each class of spearmint oil is annually allocated to new producers. For the 1997–98 marketing year, three new Class 1 producers were issued an equal proportion of the Scotch spearmint oil additional allotment base, and four new Class 3 producers were issued an equal proportion of the Native spearmint oil additional allotment base. This increased the total number of producers in the regulated production area by nearly three percent. As provided for in § 985.153, the Committee determined that the levels of issuance for the 1997–98 marketing year, approximately 3,000 pounds per new producer for Scotch spearmint oil and 2,500 pounds per new producer for Native spearmint oil, are at levels sufficient for a minimum economic enterprise to produce each class of spearmint oil.

Accordingly, based on the comment received, no changes are made to the rule as proposed.

After consideration of all relevant matter presented, including the information and recommendation submitted by the Committee and other available information, it is hereby found that this rule, as hereinafter set forth, will tend to effectuate the declare policy of the Act.

It is further found that good cause exists for not postponing the effective date of this rule until 30 days after publication in the **Federal Register** (5 U.S.C. 553) because handlers need to be able to ship their spearmint oil for the 1997–98 season which began June 1, 1997. Further, handlers are aware of this rule, which was recommended at a public meeting. Also, a 30-day comment period was provided for in the proposed rule.

List of Subjects in 7 CFR Part 985

Marketing agreements, Oils and fats, Reporting and recordkeeping requirements, Spearmint oil.

For the reasons set forth in the preamble, 7 CFR Part 985 is amended as follows:

PART 985—MARKETING ORDER REGULATING THE HANDLING OF SPEARMINT OIL PRODUCED IN THE FAR WEST

1. The authority citation for 7 CFR Part 985 continues to read as follows:

Authority: 7 U.S.C. 601–674.

2. A new section 985.216 is added to read as follows:

[**Note**: This section will not appear in the Code of Federal Regulations.]

§ 985.216 Salable quantities and allotment percentages—1997–98 marketing year.

The salable quantity and allotment percentage for each class of spearmint oil during the marketing year beginning on June 1, 1997, shall be as follows:

(a) Class 1 (Scotch) oil—a salable quantity of 996,522 pounds and an allotment percentage of 55 percent.

(b) Class 3 (Native) oil—a salable quantity of 1,125,351 pounds and an allotment percentage of 56 percent.

Dated: July 2, 1997.

Robert C. Keeney,

Director, Fruit and Vegetable Division.

[FR Doc. 97–17867 Filed 7–8–97; 8:45 am]

BILLING CODE 3410–02–P

DEPARTMENT OF AGRICULTURE

Agricultural Marketing Service

7 CFR Part 1006

[DA–97–03]

Milk in the Upper Florida Marketing Area; Suspension of Certain Provisions of the Order

AGENCY: Agricultural Marketing Service, USDA.

ACTION: Final rule; suspension.

SUMMARY: This document suspends indefinitely certain provisions of the Upper Florida Federal milk marketing order. The suspension removes the standard that a cooperative association operating a plant have at least 50 percent of the producer milk of its members received at pool distributing plants to retain its pool plant status. Florida Dairy Farmers Association, a cooperative association representing producers whose milk is pooled on the 3 Florida orders, requested the suspension. The suspension is necessary to prevent the uneconomical and inefficient movements of milk.

EFFECTIVE DATE: September 1, 1997.

FOR FURTHER INFORMATION CONTACT: Nicholas Memoli, Marketing Specialist, USDA/AMS/Dairy Division, Order Formulation Branch, Room 2971, South Building, P.O. Box 96456, Washington, DC 20090–6456, (202) 690–1932, e-mail address: Nicholas__Memoli@USDA.gov.

SUPPLEMENTARY INFORMATION: Prior document in this proceeding:

Notice of Proposed Suspension: Issued April 21, 1997; published April 24, 1997 (62 FR 19939).

The Department is issuing this final rule in conformance with Executive Order 12866.

This final rule has been reviewed under Executive Order 12988, Civil Justice Reform. This rule is not intended to have a retroactive effect. This rule will not preempt any state or local laws, regulations, or policies, unless they present an irreconcilable conflict with this rule.

The Agricultural Marketing Agreement Act of 1937, as amended (7 U.S.C. 601–674), provides that administrative proceedings must be exhausted before parties may file suit in court. Under section 608c(15)(A) of the Act, any handler subject to an order may request modification or exemption from such order by filing with the Secretary a petition stating that the order, any provision of the order, or any obligation imposed in connection with the order is not in accordance with the law. A handler is afforded the opportunity for a hearing on the petition. After a hearing, the Secretary would rule on the petition. The Act provides that the district court of the United States in any district in which the handler is an inhabitant, or has its principal place of business, has jurisdiction in equity to review the Secretary's ruling on the petition, provided a bill in equity is filed not later than 20 days after the date of the entry of the ruling.

Small Business Consideration

In accordance with the Regulatory Flexibility Act (5 U.S.C. 601 *et seq.*), the Agricultural Marketing Service has considered the economic impact of this action on small entities and has certified that this rule will not have a significant economic impact on a substantial number of small entities. For the purpose of the Regulatory Flexibility Act, a dairy farm is considered a ''small business'' if it has an annual gross revenue of less than $500,000, and a dairy products manufacturer is a ''small business'' if it has fewer than 500 employees. For the purposes of determining which dairy farms are ''small businesses,'' the $500,000 per year criterion was used to establish a production guideline of 326,000 pounds

per month. Although this guideline does not factor in additional monies that may be received by dairy producers, it should be an inclusive standard for most ''small'' dairy farmers. For purposes of determining a handler's size, if the plant is part of a larger company operating multiple plants that collectively exceed the 500-employee limit, the plant will be considered a large business even if the local plant has fewer than 500 employees.

For the month of January 1997, the milk of 80 producers was pooled on the Upper Florida Federal milk order. Of these producers, 23 were below the 326,000-pound production guideline and are considered to be small businesses. A majority of these producers produce more than 100,000 pounds per month. Of the total number of producers whose milk was pooled during that month, all were members of Florida Dairy Farmers Association.

In January 1997, there were 2 handlers operating 2 plants under the Upper Florida order. One of these would be considered a small business.

This rule suspends indefinitely part of a provision of the Upper Florida marketing order which specifies that a cooperative association have at least 50 percent of its members' producer milk received at pool distributing plants to retain its pool plant status. The suspension promotes orderly marketing of milk by permitting a plant operated by a cooperative association to qualify as a pool plant with minimal deliveries of milk by the cooperative to pool distributing plants in the market. This facilitates the shipment of surplus milk to the cooperative's plant, where it will then be concentrated and shipped to distant plants for its ultimate disposition. This rule lessens the regulatory impact of the order on certain milk handlers and tends to ensure that dairy farmers will continue to have their milk priced under the order and thereby receive the benefits that accrue from such pricing.

Preliminary Statement

This order of suspension is issued pursuant to the provisions of the Agricultural Marketing Agreement Act and of the order regulating the handling of milk in the Upper Florida marketing area.

Notice of proposed rulemaking was published in the **Federal Register** on April 24, 1997 (62 FR 19939) concerning a proposed suspension of certain provisions of the order. Interested persons were afforded opportunity to file written data, views and arguments thereon. No comments were received.

After consideration of all relevant material, including the proposal in the notice and other available information, it is hereby found and determined that the following provisions of the order do not tend to effectuate the declared policy of the Act:

(1) In § 1006.7, the introductory text of paragraph (c), the words ''50 percent or more of the''; and

(2) In § 1006.7, paragraph (c)(2).

Statement of Consideration

This rule suspends indefinitely part of a provision of the Upper Florida marketing order which specifies that a cooperative association have at least 50 percent of its members' producer milk received at pool distributing plants to retain its pool plant status.

The suspension was requested by Florida Dairy Farmers Association (FDFA), a cooperative association representing producers whose milk is pooled on the 3 Florida orders. FDFA contends that the suspension of the requirement would allow the continued pooling of the cooperative's Jacksonville, Florida, plant under the Upper Florida order irrespective of the quantity of producer milk received at pool distributing plants. With assurance of pooling, surplus producer milk from the Tampa Bay and Southeastern Florida marketing areas could be diverted to the Jacksonville plant for processing into concentrated milk and shipment to manufacturing plants. Also, in order to prevent the pooling of the Jacksonville plant under another Federal order, FDFA requested the suspension of § 1006.7(c)(2), which would yield regulation of the plant to another Federal order if the plant met the other order's supply plant shipping requirements. With this paragraph suspended, however, the plant would remain regulated under the Upper Florida order even if it were to qualify as a pool plant under another order.

In order to maintain the pooling of the cooperative association's manufacturing plant, a suspension of the pooling standard specifying that a cooperative association have 50 percent of the producer milk of its members received at pool distributing plants is reasonable. The suspension is found to be necessary for the purpose of assuring that producers' milk will not have to be moved in an uneconomic and inefficient manner to assure that producers whose milk has long been associated with the 3 Florida marketing areas will continue to benefit from pooling and pricing under the order.

List of Subjects in 7 CFR Part 1006

Milk marketing orders.

For the reasons set forth in the preamble 7 CFR Part 1006 is amended as follows:

PART 1006—MILK IN THE UPPER FLORIDA MARKETING AREA

1. The authority citation for 7 CFR Part 1006 continues to read as follows:

Authority: 7 U.S.C. 601–674.

§ 1006.7 [Suspended in part]

2. In § 1006.7, the words ''50 percent or more of the'' in the introductory text of paragraph (c) and paragraph (c)(2) are suspended indefinitely.

Dated: July 2, 1997.

Michael V. Dunn,

Assistant Secretary, Marketing and Regulatory Programs.

[FR Doc. 97–17868 Filed 7–8–97; 8:45 am]

BILLING CODE 3410–02–P

NORTHEAST DAIRY COMPACT COMMISSION

7 CFR Part 1381

Handler Petition Procedure; Interim Procedural Rule; Correction

AGENCY: Northeast Dairy Compact Commission.

ACTION: Correction to interim procedural rule.

SUMMARY: This document contains corrections to the interim procedural rule published by the Northeast Dairy Compact Commission on Monday June 30, 1997, 62 FR 35065. The interim procedural rule established a procedure for milk handlers to petition the Commission for administrative relief from operation of any regulatory order of the Commission pursuant to Article VI, section 16(b) of the Compact.

DATES: Effective date: July 1, 1997.

FOR FURTHER INFORMATION CONTACT: Daniel Smith, Executive Director, Northeast Dairy Compact Commission, at the above address or by telephone at (802) 229–1941 or by facsimile at (802) 229–2028.

SUPPLEMENTARY INFORMATION: As published the interim procedural rule contains language which may prove to be misleading or require clarification. Accordingly, the interim procedural rule is corrected as follows:

Section 1381.3(h) on page 35066, first column, is corrected to read as follows:

§ 1381.3 Contents of petitition.

* * * * *

(h) Petitioner's prayer for relief may include a request that payments due or payable during the pendency of the

administrative appeal or longer pursuant to § 1381.5(b), be placed in an escrow account established by the Commission. If a request for escrow is made, petitioner may make payment into a Commission established escrow account while the Commission rules upon petitioner's request in accordance with § 1381.4(b)(5). Any petitioner who refuses to make payment during this period shall be liable for payment of interest on such withheld funds, at the federal statutory rate set forth in 28 U.S.C 1961, plus such additional penalties as are appropriate under Article VI, Section 17 of the Compact.

Daniel Smith,

Executive Director.

[FR Doc. 97–17846 Filed 7–8–97; 8:45 am]

BILLING CODE 1650–01–P

DEPARTMENT OF TRANSPORTATION

Federal Aviation Administration

14 CFR Part 39

[Docket No. 97–CE–35–AD; Amendment 39–10070; AD 97–12–06]

RIN 2120–AA64

Airworthiness Directives; Cessna Aircraft Company Model 172R Airplanes

AGENCY: Federal Aviation Administration, DOT.

ACTION: Final rule; request for comments.

SUMMARY: This document publishes in the **Federal Register** an amendment adopting Airworthiness Directive (AD) 97–12–06, which was sent previously to known U.S. owners and operators of certain Cessna Aircraft Company (Cessna) Model 172R airplanes. This AD requires checking the clearance between both the gascolator and cowling area and the tailpipe and cowling area, and modifying these areas immediately if any evidence of rubbing at either location is found or modifying the gascolator to cowling area within a certain time period if no evidence of rubbing at either location is found. This AD results from an occurrence of fuel loss on a Cessna Model 172R airplane, which was severe enough to force an emergency landing. Investigation of the occurrence reveals that the cowling knocked the gascolator drain valve off the gascolator. The actions specified by this AD are intended to prevent the cowling from rubbing against the gascolator drain valve or the tailpipe, which could result in fuel loss and engine stoppage.

DATES: Effective July 15, 1997, to all persons except those to whom it was made immediately effective by priority letter AD 97–12–06, issued June 6, 1997, which contained the requirements of this amendment.

The incorporation by reference of certain publications listed in the regulations is approved by the Director of the Federal Register as of July 15, 1997.

Comments for inclusion in the Rules Docket must be received on or before September 12, 1997.

ADDRESSES: Submit comments in triplicate to the Federal Aviation Administration (FAA), Central Region, Office of the Assistant Chief Counsel, Attention: Rules Docket 97–CE–35–AD, Room 1558, 601 E. 12th Street, Kansas City, Missouri 64106.

Service information that applies to this AD may be obtained from the Cessna Aircraft Company, Product Support, P.O. Box 7706, Wichita, Kansas 67277. This information may also be examined at the Rules Docket at the address above, or at the Office of the Federal Register, 800 North Capitol Street, NW., 7th Floor, suite 700, Washington, DC.

FOR FURTHER INFORMATION CONTACT: Mr. Paul O. Pendleton, Aerospace Engineer, FAA, Wichita Aircraft Certification Office, 1801 Airport Road, Room 100, Wichita, Kansas 67209; telephone (316) 946–4143; facsimile (316) 946–4407.

SUPPLEMENTARY INFORMATION:

Discussion

On June 6, 1997, the FAA issued priority letter AD 97–12–06, which applies to certain Cessna Model 172R airplanes. That AD resulted from an occurrence of fuel loss on one of these airplanes, which was severe enough to force an emergency landing. Investigation of the occurrence revealed that the cowling knocked the gascolator drain valve off the gascolator.

Further examination of the design of the Model 172R airplanes shows that this condition exists when the tailpipe vibrates, during some starting conditions, into the cowling. The cowling then rubs against the gascolator drain valve, knocking the gascolator drain valve off the gascolator, and causing fuel to drain from the airplane at an extremely high flow rate. This results in engine stoppage with consequent forced landing or crash landing.

Discussion of the Applicable Service Information

The FAA has reviewed and approved Cessna Service Bulletin SB97–28–01, dated June 6, 1997. This service bulletin includes procedures for modifying the gascolator to cowling clearance and tailpipe to cowling clearance.

The FAA's Determination and Explanation of the AD

Since an unsafe condition has been identified that is likely to exist or develop in other Cessna Model 172R airplanes of the same type design, the FAA issued priority letter AD 97–12–06 to prevent the cowling from rubbing against the gascolator drain valve or the tailpipe, which could result in fuel loss and engine stoppage. The AD requires checking the clearance between both the gascolator and cowling area and the tailpipe and cowling area, and modifying these areas immediately if any evidence of rubbing at either location is found or modifying the gascolator to cowling area within 10 hours time-in-service (TIS) if no evidence of rubbing at either location is found. Accomplishment of the modifications is in accordance with Cessna Service Bulletin SB97–28–01 if rubbing is evident, or in accordance with Figure 1 of this AD if no rubbing is evident.

Determination of the Effective Date of the AD

Since it was found that immediate corrective action was required, notice and opportunity for prior public comment thereon were impracticable and contrary to the public interest, and good cause existed to make the AD effective immediately by individual lettters issued on June 6, 1997, to known U.S. operators of certain Cessna Models 172R airplanes. These conditions still exist, and the AD is hereby published in the **Federal Register** as an amendment to section 39.13 of the Federal Aviation Regulations (14 CFR 39.13) to make it effective as to all persons.

Comments Invited

Although this action is in the form of a final rule that involves requirements affecting immediate flight safety and, thus, was not preceded by notice and opportunity to comment, comments are invited on this rule. Interested persons are invited to comment on this rule by submitting such written data, views, or arguments as they may desire. Communications should identify the Rules Docket number and be submitted in triplicate to the address specified above. All communications received on or before the closing date for comments will be considered, and this rule may be amended in light of the comments received. Factual information that supports the commenter's ideas and

suggestions is extremely helpful in evaluating the effectiveness of the AD action and determining whether additional rulemaking action would be needed.

Comments are specifically invited on the overall regulatory, economic, environmental, and energy aspects of the rule that might suggest a need to modify the rule. All comments submitted will be available, both before and after the closing date for comments, in the Rules Docket for examination by interested persons. A report that summarizes each FAA-public contact concerned with the substance of this AD will be filed in the Rules Docket.

Commenters wishing the FAA to acknowledge receipt of their comments submitted in response to this rule must submit a self-addressed, stamped postcard on which the following statement is made: ''Comments to Docket No. 97–CE–35–AD.'' The postcard will be date stamped and returned to the commenter.

Regulatory Impact

The regulations adopted herein will not have substantial direct effects on the States, on the relationship between the national government and the States, or on the distribution of power and responsibilities among the various levels of government. Therefore, in accordance with Executive Order 12612, it is determined that this final rule does not have sufficient federalism implications to warrant the preparation of a Federalism Assessment.

The FAA has determined that this regulation is an emergency regulation that must be issued immediately to correct an unsafe condition in aircraft, and is not a ''significant regulatory action'' under Executive Order 12866. It has been determined further that this action involves an emergency regulation under DOT Regulatory Policies and Procedures (44 FR 11034, February 26, 1979). If it is determined that this emergency regulation otherwise would be significant under DOT Regulatory Policies and Procedures, a final regulatory evaluation will be prepared and placed in the Rules Docket. A copy of it, if filed, may be obtained from the Rules Docket at the location provided under the caption **ADDRESSES**.

List of Subjects in 14 CFR Part 39

Air transportation, Aircraft, Aviation safety, Incorporation by reference, Safety.

Adoption of the Amendment

Accordingly, pursuant to the authority delegated to me by the Administrator, the Federal Aviation Administration amends part 39 of the Federal Aviation Regulations (14 CFR part 39) as follows:

PART 39—AIRWORTHINESS DIRECTIVES

1. The authority citation for part 39 continues to read as follows:

Authority: 49 USC 106(g), 40113, 44701.

§39.13 [Amended]

2. Section 39.13 is amended by adding a new airworthiness directive (AD) to read as follows:

97–12–06 Cessna Aircraft Company: Amendment 39–10070; Docket No. 97–CE–35–AD.

Applicability: Model 172 airplanes, serial numbers 17280001 through 17280081, certificated in any category.

Note 1: This AD applies to each airplane identified in the preceding applicability provision, regardless of whether it has been modified, altered, or repaired in the area subject to the requirements of this AD. For airplanes that have been modified, altered, or repaired so that the performance of the requirements of this AD is affected, the owner/operator must request approval for an alternative method of compliance in accordance with paragraph (e) of this AD. The request should include an assessment of the effect of the modification, alteration, or repair on the unsafe condition addressed by this AD; and, if the unsafe condition has not been eliminated, the request should include specific proposed actions to address it.

Compliance: Required as indicated in the body of this AD, unless already accomplished, except to those operators receiving this action by priority letter issued June 6, 1997, which made these actions effective immediately upon receipt.

To prevent the cowling from rubbing against the gascolator drain valve or the tailpipe, which could result in fuel loss and engine stoppage, accomplish the following:

(a) Prior to further flight after the effective date of this AD, check the clearance between both the gascolator and cowling area and the tailpipe and cowling area for evidence of rubbing.

(1) If any evidence of rubbing is found, prior to further flight, modify both the gascolator and cowling area and tailpipe and cowling area in accordance with Cessna Service Bulletin SB97–28–01, dated June 6, 1997.

(2) If no evidence of rubbing is found, repeat the check in paragraph (a) before each flight, and within the next 10 hours time-in-service (TIS) after the effective date of this AD, modify the gascolator and cowling area in accordance with Figure 1 of this AD.

BILLING CODE 4910–13–U

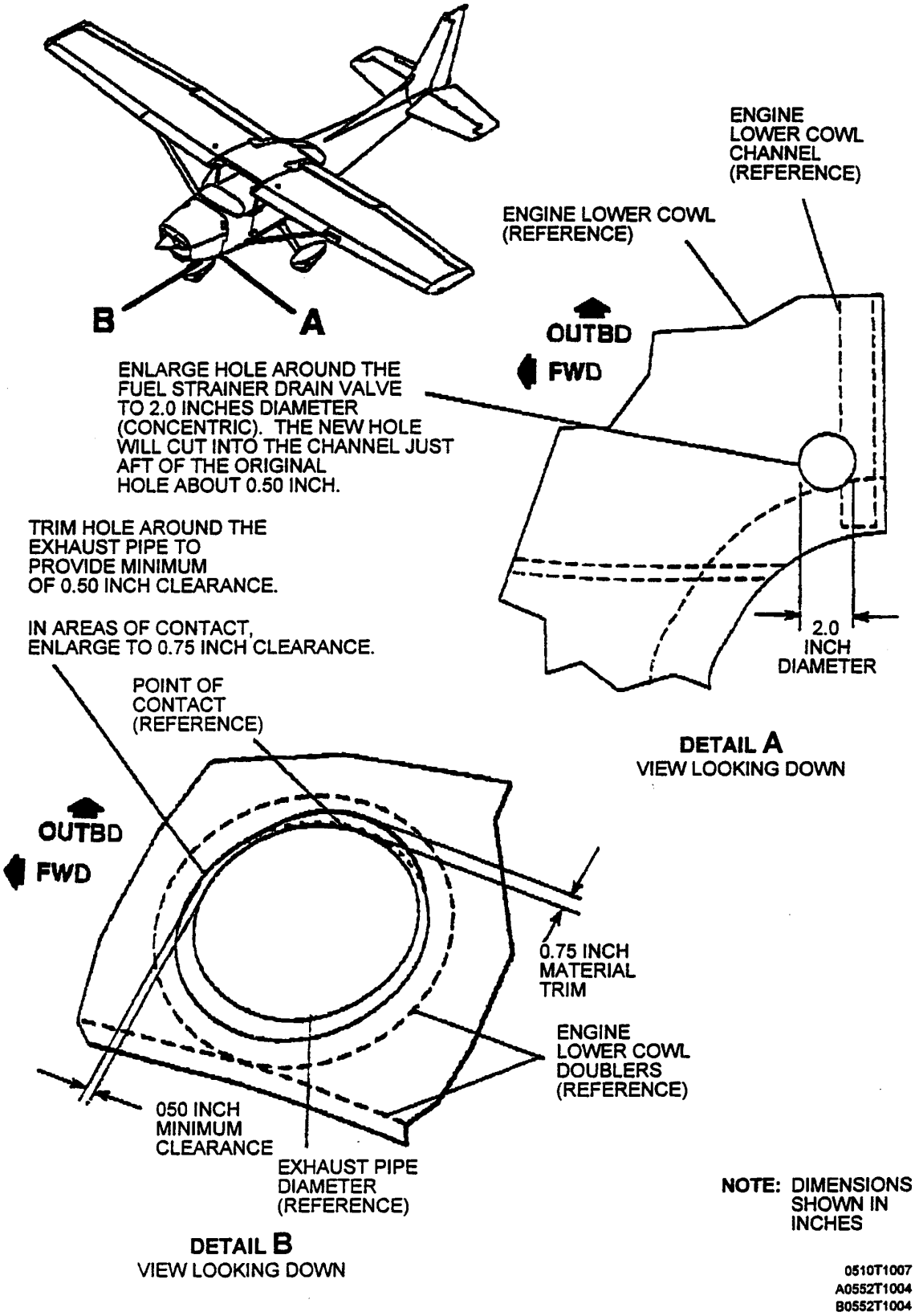

Engine Lower Cowling Modification
Figure 1

BILLING CODE 4910–13–C

(b) Modifying both the gascolator and cowling area and tailpipe and cowling area in accordance with Cessna Service Bulletin SB97–28–01, dated June 6, 1997, satisfies all the requirements of this AD, and may be accomplished in place of the check required by paragraph (a) of this AD.

(c) The check required by paragraph (a) of this AD may be performed by the owner/operator holding at least a private pilot certificate as authorized by section 43.7 of the Federal Aviation Regulations (14 CFR 43.7), and must be entered into the aircraft records showing compliance with this AD in accordance with section 43.11 of the Federal Aviation Regulations (14 CFR 43.11).

(d) Special flight permits may be issued in accordance with sections 21.197 and 21.199 of the Federal Aviation Regulations (14 CFR 21.197 and 21.199) to operate the airplane to a location to accomplish the modification requirements of this AD provided no evidence of rubbing is found during the check required by paragraph (a) of this AD.

(1) If evidence of rubbing is found in either the gascolator to cowling area or the tailpipe to cowling area during the check required by paragraph (a) of this AD, then no special flight permits will be granted.

(2) Prior to any flight granted through a special flight permit, the check required by paragraph (a) of this AD must be accomplished again to assure that no evidence of rubbing exists in either the gascolator to cowling area or the tailpipe to cowling area. If evidence of rubbing is found in either the gascolator to cowling area or the tailpipe to cowling area, then the special flight permit is not valid.

(e) An alternative method of compliance or adjustment of the compliance time that provides an equivalent level of safety may be approved by the Manager, Wichita Aircraft Certification Office (ACO), 1801 Airport Road, Room 100, Mid-Continent Airport, Wichita, Kansas 67209. The request shall be forwarded through an appropriate FAA Maintenance Inspector, who may add comments and then send it to the Manager, Wichita ACO.

Note 2: Information concerning the existence of approved alternative methods of compliance with this AD, if any, may be obtained from the Wichita ACO.

(f) The modifications required by this AD (if evidence of rubbing is found) shall be done in accordance with Cessna Service Bulletin SB97–28–01, dated June 6, 1997. This incorporation by reference was approved by the Director of the Federal Register in accordance with 5 U.S.C. 552(a) and 1 CFR part 51. Copies may be obtained from the the Cessna Aircraft Company, Product Support, P.O. Box 7706, Wichita, Kansas 67277. Copies may be inspected at the FAA, Central Region, Office of the Assistant Chief Counsel, Room 1558, 601 E. 12th Street, Kansas City, Missouri, or at the Office of the Federal Register, 800 North Capitol Street, NW., suite 700, Washington, DC.

(g) This amendment (39–10070) becomes effective on July 15, 1997, to all persons except those persons to whom it was made immediately effective by priority letter AD 97–12–06, issued June 6, 1997, which contained the requirements of this amendment.

Issued in Kansas City, Missouri, on June 30, 1997.

Michael Gallagher,

Manager, Small Airplane Directorate, Aircraft Certification Service.

[FR Doc. 97–17729 Filed 7–8–97; 8:45 am]

BILLING CODE 4910–13–U

DEPARTMENT OF COMMERCE

National Oceanic and Atmospheric Administration

15 CFR Part 922

[Docket No. 960712192–7160–02]

RIN 0648–AD85

Florida Keys National Marine Sanctuary; Supplemental Final Regulatory Flexibility Analysis: Commercial Treasure Salvors

AGENCY: Office of Ocean and Coastal Resource Management (OCRM), National Ocean Service (NOS), National Oceanic and Atmospheric Administration (NOAA), Department of Commerce.

ACTION: Final rule; availability of Supplemental Final Regulatory Flexibility Analysis (Supplemental FRFA).

SUMMARY: Pursuant to the Florida Keys National Marine Sanctuary and Protection Act and the National Marine Sanctuaries Act, NOAA developed a comprehensive final management plan for the Florida Keys National Marine Sanctuary (FKNMS or the Sanctuary). NOAA issued final regulations on January 30, 1997, to implement that plan and govern the conduct of activities within the Sanctuary, and modified them on June 12, 1997.

A Final Regulatory Flexibility Analysis (FRFA) was prepared for the final regulations. The FRFA was summarized in the **Federal Register** document issuing the final Sanctuary regulations (62 FR 4578, January 30, 1997), and its availability announced. The Office of the Chief Counsel for Advocacy of the Small Business Administration (SBA) reviewed the FRFA and received several comments critical of certain portions of the FRFA, mainly with regard to the discussion of submerged cultural resources and the impacts on treasure salvors. The Office of the Chief Counsel for Advocacy informally suggested to NOAA that the portion of the FRFA on treasure salvage be supplemented. Consequently, prior to the effective date of the final Sanctuary regulations (July 1, 1997) NOAA prepared a Supplemental FRFA covering commercial treasure salvage. The Assistant Administrator for Ocean Services and Coastal Zone Management upon reviewing the Supplemental FRFA concluded that it presented no information warranting modifications to the final regulations. Consequently, the Assistant Administrator has ratified the final regulations. This document summarizes and announces the availability of the Supplemental FRFA.

ADDRESSES: Requests for a copy of the Supplemental Final Regulatory Flexibility Analysis: Commercial Treasure Salvage, the Final Regulatory Flexibility Analysis, or the Final Management Plan/Environmental Impact Statement should be submitted to the Sanctuary Superintendent, Florida Keys National Marine Sanctuary, P.O. Box 500368, Marathon, Florida 33050.

FOR FURTHER INFORMATION CONTACT: Billy Causey, Sanctuary Superintendent, 305/743–2437 or Edward Lindelof, East Coast Branch Chief, Sanctuaries and Reserves Division, 301/713–3137 Extension 131.

SUPPLEMENTARY INFORMATION:

I. Introduction

The FKNMS was designated by an act of Congress entitled the Florida Keys National Marine Sanctuary and Protection Act (FKNMSPA, Pub. L. No. 101–605) which was signed into law on November 16, 1990. The FKNMSPA directed the Secretary of Commerce to develop a comprehensive management plan and regulations for the Sanctuary pursuant to sections 303 and 304 of the National Marine Sanctuaries Act (NMSA) (also known as Title III of the Marine Protection, Research, and Sanctuaries Act of 1972), as amended, 16 U.S.C. 1431 *et seq.*). The NMSA authorizes the development of management plans and regulations for national marine sanctuaries to protect their conservation, recreational, ecological, historical, research, educational, or aesthetic qualities.

The authority of the Secretary to designate national marine sanctuaries and implement designated sanctuaries was delegated to the Under Secretary of Commerce for Oceans and Atmosphere by the Department of Commerce, Organization Order 10–15, § 3.01(z) (Jan. 11, 1988). The authority to administer the other provisions of the NMSA was delegated to the Assistant Administrator for Ocean Services and Coastal Zone Management of NOAA by NOAA Circular 83–38, Directive 05–50 (Sept. 21, 1983, as amended).

NOAA published final Sanctuary regulations to implement the management plan on January 30, 1997 (62 FR 4578), and modified them on June 12, 1997 (62 FR 32154). The effective date of the final Sanctuary regulations is July 1, 1997.

II. Regulatory Flexibility Act

The economic impacts to commercial treasure salvors are addressed in the Draft and Final Environmental Impact Statements; the assessment conducted pursuant to E.O. 12866, the FRFA, as well as in the Supplemental FRFA.

The FRFA was summarized in the **Federal Register** document issuing the final Sanctuary regulations (62 FR 4578, 4605–4606), and its availability announced. The Office of the Chief Counsel for Advocacy of the Small Business Administration (SBA) reviewed the FRFA and received several comments critical of certain portions of the FRFA, mainly with regard to the treatment of submerged cultural resources and the impacts on treasure salvors. At SBA's suggestion, and because of the time provided by the forty-five day Congressional review period under the National Marine Sanctuaries Act, NOAA prepared a supplement to the FRFA to further address the comments received by the SBA regarding commercial treasure salvage. The following provides a summary of the Supplemental FRFA.

Section 604(a)(1) of the Regulatory Flexibility Act (RFA) requires that the FRFA contain a succinct statement of the need for, and objectives of, the rule. The FKNMSPA mandated the development of a final management plan and implementing regulations in order to protect and manage Sanctuary resources in a manner which facilitates multiple uses of the Sanctuary which are consistent with the primary objective of resource protection.

Prior to Sanctuary designation, the recovery of artifacts from historic shipwrecks by treasure hunters and commercial salvors was controlled by a contract system under Florida State law and the maritime admiralty law of finds and salvage outside State submerged lands and waters. The statutory designation of the FKNMS in 1990 made historic shipwreck public sanctuary resources, just like the coral, seagrass beds and other natural resources of the Sanctuary. Federal historic preservation law generally prohibits the unauthorized removal and privatization of public resources. Therefore, unless the recovery is conducted pursuant to some valid pre-existing Federal or State authorization or is expressly authorized by a Sanctuary permit, the salvage is prohibited. The Sanctuary regulations include a permit system for recovery and privatization of public resources under certain circumstances. Without this permit system, no private recovery would be lawful under the existing Federal Archaeological Program (FAP), the underlying Federal Historic Preservation Laws and the NMSA.

Section 604(a)(2) of the RFA requires a summary of the significant issues raised by the public comments in response to the Initial Regulatory Flexibility Analysis (IRFA), a summary of the assessment of the agency of such issues, and a statement of any changes to the proposed rule as a result of such comments. While an IRFA was determined not to be require for the Draft Management Plan/Draft Environmental Impact Statement (DMP/DEIS) and therefore was not prepared, a socioeconomic impact analysis was conducted and was summarized in the DMP/DEIS. The socioeconomic impact analysis stated that the adverse impacts were expected to be minimal for several reasons, including past and present salvage activities, the likelihood of new discoveries, enactment of the Abandoned Shipwreck Act and other Federal historic preservation laws, and the shift of the treasure salvage industry away from the Florida Keys to waters outside the United States, particularly in the Caribbean. NOAA received comments on its proposed management of submerged cultural resources (SCRs) from the public, and for the most part, treasure salvors, particularly the Historic Shipwreck Salvage Policy Council (HSSPC), throughout the development of the final regulations and management plan, as well as comments received by the SBA on the FRFA. NOAA's responses to these comments, and a description of what changes are made in the final regulations and management plan, are found in the Final Management Plan/Final Environmental Impact Statement, final regulations, FRFA and Supplemental FRFA. The issues raised in the comments received, and NOAA's responses thereto, address: (1) The ban on treasure salvage; (2) penalties; (3) prohibiting treasure hunting and not issuing permits for private profit; (4) SCR plan/permits and costs to treasure salvors' businesses; (5) Special Use Permits; fees/waiver in SCR Context; (6) public access to SCRs; (7) inventory of SCRs—responsibility & expense; and (8) survey/inventory permits.

Section 604(a)(3) requires a description of, and an estimate of, the number of small entities to which the rule will apply or an explanation of why no such estimate is available. The small businesses that directly use the Sanctuary and its resources, and therefore will be subject to the Sanctuary regulations, include commercial treasure salvors. The Supplemental FRFA describes the creation and evolution of the treasure hunting-commercial salvage industry; the current commercial treasure salvage industry in Florida and the Florida Keys—professional treasure hunters, part-time treasure hunters, and amateur souvenir collectors/hobbyists. The Supplemental FRFA also describes other groups interested in historic sanctuary resources—recreational divers, archaeologists, historians, educators, fishermen, and the public.

Section 604(a)(4) requires that the FRFA contain a description of the reporting, recordkeeping and other compliance requirements of the rule, including an estimate of the classes of small entities which will be subject to the requirement and the type of professional skills necessary for preparation of the report or record. As discussed in the FRFA, the Sanctuary regulations require that permittees submit status reports for activities conducted under Sanctuary permits. The reporting requirement for SCR permits may be more rigorous than the existing State contracts, but they are necessary to preserve historical and archaeological information consistent with existing Federal historic preservation laws. The number of small entities which must comply with this requirement will depend on the number of applicants; expected to be less than 20 per year. The Supplemental FRFA adds that as regards commercial treasure salvors, the reporting and recordkeeping requirements under this rule is limited to the SCR permit system which consists of: (1) A survey/inventory permit (phase 1); (2) a research/recovery permit (phase 2); and (3) a Special Use Permit for deaccession/transfer (phase 3). No permit is required for the search with non-intrusive remote sensing devices. However, a permit is required if there is even limited excavation for identification purposes because of the potential loss or injury to Sanctuary resources (natural and historic).

Section 604(a)(5) requires a description of the steps taken to minimize the significant economic impacts on small entities consistent with the factual, policy, and legal reasons for selecting the alternative adopted in the final rule and why each one of the other significant alternatives to the rule considered by the agency which affect the impact on small entities was rejected. In the 25 year history of the National Marine

Sanctuary Program, and consistent with the FAP, commercial treasure salvage has never been permitted in any national marine sanctuary prior to the Sanctuary plan. The final Sanctuary regulations and management plan, as they pertain to SCRs and commercial treasure salvage, were based on the meetings with and comments from treasure salvors, comments from historic preservationists, and the public. In response to comments, the final regulations and plan reflect changes that were made in an effort to make the permit system more pragmatic from the perspective of the commercial treasure salvors without compromising the primary objectives of protecting significant natural and historic sanctuary resources. In particular, the final plan and regulations contain more detail on the criteria for NOAA/State decisions regarding the circumstances when SCRs may recovered under the Sanctuary permit system. The regulations also establish a system by which a permittee may retain possession of the SCRs, make money off their display, and in certain circumstances, be able to privatize the public resource for sale, transfer or distribution to investors. Other changes to the regulations are further described in the Supplemental FRFA.

The SBA also received an E-mail from the Conch Coalition stating that the Florida Keys Marine Life Association had just become aware that the Sanctuary regulations would have significant adverse economic impacts on the Florida Keys marine life industry and that the FRFA did not properly deal with those impacts. The E-mail stated that detailed comments on this issue would be forthcoming from the Florida Keys Marine Life Association. Such comments were never received. Accordingly, the FRFA has not been supplemented with respect to the Florida Keys marine life industry.

A copy of the supplemental FRFA may be obtained upon request.

List of Subjects in 15 CFR Part 922

Administrative practice and procedure, Coastal zone, Education, Environmental protection, Marine resources, Natural resources, Penalties, Recreation and recreation areas, Reporting and recordkeeping requirements, Research.

Dated: June 30, 1997.

Nancy Foster,

Assistant Administrator for Ocean Services and Coastal Zone Management.

[FR Doc. 97–17709 Filed 7–8–97; 8:45 am]

BILLING CODE 3510–12–M

DEPARTMENT OF ENERGY

Federal Energy Regulatory Commission

18 CFR Part 35

[Docket Nos. RM95–8–004 and RM94–7–005]

Promoting Wholesale Competition Through Open Access Non-Discriminatory Transmission Services by Public Utilities; Recovery of Stranded Costs by Public Utilities and Transmitting Utilities

AGENCY: Federal Energy Regulatory Commission.

ACTION: Final rule; order denying motion for stay.

SUMMARY: The Federal Energy Regulatory Commission (Commission) denies Ontario Hydro's motion for stay pending judicial review of the reciprocity provision of Order No. 888 as it applies to transmission-owning foreign electric utilities. Based on the limited information provided by Ontario Hydro, the Commission could not conclude that Ontario Hydro has demonstrated on this record that justice requires a stay.

FOR FURTHER INFORMATION CONTACT: Lois D. Cashell, Secretary, (202) 208–0400.

SUPPLEMENTARY INFORMATION: In addition to publishing the full text of this document in the **Federal Register**, the Commission also provides all interested persons an opportunity to inspect or copy the contents of this document during normal business hours in the Public Reference Room at 888 First Street, N.E., Washington, D.C. 20426.

The Commission Issuance Posting System (CIPS), an electronic bulletin board service, provides access to the texts of formal documents issued by the Commission. CIPS is available at no charge to the user and may be accessed using a personal computer with a modem by dialing 202–208–1397 if dialing locally or 1–800–856–3920 if dialing long distance. To access CIPS, set your communications software to 19200, 14400, 12000, 9600, 7200, 4800, 2400, or 1200 bps, full duplex, no parity, 8 data bits and 1 stop bit. The full text of this order will be available on CIPS in ASCII and WordPerfect 6.1 format. CIPS user assistance is available at 202–208–2474.

CIPS is also available through the Fed World system. Telnet software is required. To access CIPS via the Internet, point your browser to the URL address: http://www.fedworld.gov and select the ''Go to the FedWorld Telnet Site'' button. When your Telnet software connects you, log on to the FedWorld system, scroll down and select FedWorld by typing: 1 and at the command line then typing: /go FERC. FedWorld may also be accessed by Telnet at the address fedworld.gov.

Finally, the complete text on diskette in WordPerfect format may be purchased from the Commission's copy contractor, La Dorn Systems Corporation. La Dorn Systems Corporation is also located in the Public Reference Room at 888 First Street, N.E., Washington, D.C. 20426.

Before Commissioners: James J. Hoecker, Chairman; Vicky A. Bailey, William L. Massey, and Donald F. Santa, Jr.

Order Denying Motion for Stay

Issued June 20, 1997.

On May 2, 1997, Ontario Hydro filed a motion for stay pending judicial review of the provision of Order No. 888 [1] ''requiring transmission-owning foreign electric utilities to provide open-access transmission services as a condition to receiving transmission access from transmission-owning public utilities in the United States (the 'Open-Access Condition').'' [2] On May 16, 1997, the Commission, in response to Ontario Hydro's motion, issued an order clarifying the reciprocity condition of Order No. 888 and requesting additional information.[3] Ontario Hydro submitted its response on May 23, 1997. Based on the limited information provided by Ontario Hydro, as set forth below, we cannot conclude that Ontario Hydro has demonstrated on this record that justice requires a stay. We therefore deny Ontario Hydro's motion.

I. Background

A. Motion for Stay

Ontario Hydro is a Canadian utility that historically has sold electric power to U.S. purchasers. It claims that the Open-Access Condition will ''disrupt'' its entire ''forecasted'' $235 million (Canadian) per year U.S. export business and that it will have no opportunity to recover any of its losses.

Ontario Hydro interprets the Open-Access Condition as applying ''not only

[1] Promoting Wholesale Competition Through Open Access Non-Discriminatory Transmission Services by Public Utilities and Recovery of Stranded Costs by Public Utilities and Transmitting Utilities, Order No. 888, 61 FR 21540 (May 10, 1996), FERC Stats. & Regs. ¶ 31,036 (1996), *order on reh'g*, Order No. 888–A, 62 FR 12274 (March 14, 1997), FERC Stats. & Regs. ¶ 31,048 (1997), *reh'g pending.*

[2] Motion for Stay at 1.

[3] Order Clarifying Order No. 888 Reciprocity Condition and Requesting Additional Information, 79 FERC ¶ 61,182 (May 16 Order).

to sales by Ontario Hydro that require delivery by Ontario Hydro to points within the U.S., but also to sales by Ontario Hydro to U.S. purchasers at the Canadian border, which do not require delivery by Ontario Hydro to points within the U.S.'' [4] It asserts that it will lose all of these sales because it ''cannot allow the required open access into Ontario without the approval of the Ontario Government, which will require a complete restructuring of the Province's electric power system and the resolution of a number of very complex financial and other issues.'' [5]

Ontario Hydro asserts that its motion for stay satisfies the test for granting a stay and maintains, among other things, that it will sustain substantial irreparable injury without a stay. In particular, it alleges that Order No. 888 has precluded Ontario Hydro and its U.S. purchasers from obtaining transmission services from interconnected utilities in the Michigan Electric Coordinated System (MECS) and Niagara Mohawk Power Corporation, has resulted in Ontario Hydro sales to a U.S. customer being interrupted by the MECS utilities, and has allowed MECS utilities to obtain commercially sensitive market information from Ontario Hydro. It further asserts that a stay would not cause harm to any other party and that a stay is in the public interest by keeping existing competitors in the bulk power market. Finally, Ontario Hydro asserts that it is likely to succeed on the merits because the Commission ''lacks express statutory authority for issuance of this rule, an appellate court has rendered a contemporaneous decision that undermines the Commission's authority to issue the new regulation,[6] and the Commission's rule is inconsistent with U.S. obligations under an international trade agreement.'' [7]

B. Responses to Motion for Stay

On May 13, 1997, Consumers Energy Company (Consumers) and Detroit Edison Company (Detroit Edison) filed a preliminary joint answer opposing the motion for stay (Preliminary Joint Answer).[8] They explain that Consumers, Detroit Edison and Ontario Hydro are parties to an Interconnection Agreement under which Ontario Hydro continues to sell power into the United States through buy-sell transactions. In particular, they provide data showing that during 1996 Ontario Hydro sold $54,537,600 of electric power pursuant to the Interchange Agreement and $24,821,554 of electric power during the first four months of 1997.[9] Thus, they argue, Ontario Hydro cannot show that it will be harmed by a denial of a stay because it is able to sell power in the United States despite the reciprocity condition of Order No. 888 and Ontario Hydro's lack of a reciprocal open access tariff.

On May 16, 1997, Hydro-Quebec filed an answer opposing the motion for stay. It seeks assurance that any action the Commission takes concerning Ontario Hydro's motion will not delay the Commission's ruling on HQ Energy Services (U.S.) Inc.'s (an affiliate of Hydro-Quebec) request for market-based rate authority in Docket No. ER97–851–000.

C. Commission Order of May 16, 1997

By order issued May 16, 1997, the Commission clarified the Order No. 888 reciprocity condition and requested Ontario Hydro to provide additional information. The Commission clarified that the revised language in the Section 6 reciprocity condition in the pro forma tariff ''does not impose the reciprocity condition in circumstances where a Canadian utility sells power to a U.S. utility located at the United States/Canada border, title to the electric power transfers to the U.S. border utility, and the power is then resold by the U.S. border utility to a U.S. customer that has no affiliation with, and no contractual or other tie to, the Canadian utility.'' Because Ontario Hydro's motion contained only general, unsupported allegations of harm and did not contain sufficient information for the Commission to analyze whether a stay is appropriate, the Commission asked Ontario Hydro to respond to a number of specific questions. These questions were an attempt to ascertain specifically how Ontario Hydro has conducted transactions with U.S. border utilities and U.S. customers both pre- and post-Order No. 888, whether Ontario Hydro was indeed being denied transmission access as a result of Order No. 888 in order to continue historical transactions with U.S. utilities, and the derivation of Ontario Hydro's claimed monetary injury.

D. Further Answer of Detroit Edison

On May 19, 1997, Detroit Edison filed a further answer opposing the motion for stay.[10] It emphasizes that Ontario Hydro's sales have not been ''abruptly halted,'' but that instead, ''exports of electricity from Ontario Hydro to the State of Michigan during the first four months of 1997 totaled 1,359,238 Mwh, at a value of $24.8 million of sales, as compared with exports of 416,269 Mwh, at a value of $9.6 million of sales, during the same period of 1996.'' [11] It points out that Ontario Hydro is party to an Interconnection Agreement under which ''Ontario Hydro's sales to United States purchasers are continuing in the same manner Ontario Hydro has utilized for many years to build the export business it now claims is threatened by the requirements of Order No. 888.'' [12]

Detroit Edison further explains that the alleged interruption of sales to a U.S. customer (Toledo Edison Company) by MECS actually was undertaken as a buy/sell transaction pursuant to the Interconnection Agreement and that ''during the month of April 1997, Toledo Edison purchased 632,144 megawatthours of energy produced and sold by Ontario Hydro in 13 separate transactions.'' [13]

Detroit Edison asserts that Ontario Hydro has not demonstrated a likelihood of success on the merits of its appeal because the Commission's action was fully within its jurisdiction and consistent with the United States' NAFTA obligations. It also asserts that Ontario Hydro will not be irreparably injured by the denial of a stay as evidenced by the continuing and even increasing deliveries of energy by Ontario Hydro to MECS since issuance

[4] Motion for Stay at 2.

[5] *Id.*

[6] Motion for Stay at 7–8. Ontario Hydro cites *Altamont Gas Transmission Company* v. *FERC,* 92 F.3d 1239 (D.C. Cir. 1996), *cert. denied sub nom.* Indicated Expansion Shippers v. FERC, 117 S.Ct. 1568 (1997).

[7] Motion at 8 and 11. Ontario Hydro references the North American Free Trade Agreement (NAFTA), Article 301, *see* 32–3 Int'l Legal Materials 682 (1993); 19 U.S.C.A. § 3301 *et seq.* (1995 Supp.) (legislation implementing NAFTA), and the General Agreement on Tariffs and Trade (GATT), 61 Stat. A5, A18–A19 (1947).

[8] Consumers and Detroit Edison comprise the MECS System.

[9] The derivation of these amounts is set forth, by month, in a chart attached to the affidavit of Jon E. Weist, Staff Engineer, Transmission Operations, for the Michigan Electric Power Coordinating Center.

[10] Also on May 19, 1997, Consumers filed a summary answer to Ontario Hydro's Motion for Stay concurring with the arguments contained in Detroit Edison's Answer. It explains that it is not joining with Detroit Edison's Answer simply because Detroit Edison's Answer includes some factual assertions about which Consumers has no personal knowledge.

[11] Detroit Edison Answer at 2.

[12] *Id.* Detroit Edison explains:

The electrical transmission facilities of Detroit Edison have been directly interconnected with those of Ontario Hydro since September, 1953, and the electrical generation and transmission networks in Michigan and Ontario are coordinated in accordance with the provisions of an Interconnection Agreement between Detroit Edison, Consumers Energy Company (''Consumers''), and Ontario Hydro dated as of January 29, 1975, as amended July 20, 1976, June 21, 1979, April 1, 1985, October 3, 1988, and February 1, 1991.

[13] Detroit Edison Answer at 6–7 and 13–14.

of Order No. 888. Detroit Edison further asserts that a stay would harm other parties, including itself, because Ontario Hydro would be permitted to compete in the United States with Detroit Edison and other U.S. utilities, but Detroit Edison and other U.S. utilities would not be able to compete with Ontario Hydro in Canada. Finally, Detroit Edison declares that a stay would not be in the public interest because it would substantially alter the status quo and permit Ontario Hydro to compete unfairly in the United States.

E. Response of Ontario Hydro to May 16 Order

On May 23, 1997, Ontario Hydro submitted its response to the Commission's May 16 Order. Ontario Hydro declares that because the Commission clarified that buy/sell arrangements that include a contract, link or tie between Ontario Hydro and the non-border purchaser are subject to reciprocity, all of its buy-resell transactions (now numbering 40) will now be blocked by the Open Access Condition unless it can obtain waivers.

Ontario Hydro further takes issue with the scope of the Commission's questions. It interprets the questions as implying that ''Ontario Hydro cannot be suffering much injury due to Orders 888 and 888–A, because Ontario Hydro has been conducting some sales at the international border—essentially under the 'old' pre-Order 888 rules—and should have no expectation that it could participate fully under the new rules established by the Commission for the U.S. wholesale power market.'' [14] Ontario Hydro believes that this approach ''does not fairly reflect the good faith contributions Ontario Hydro has made to U.S. utilities and other organizations over the years and its rights under the U.S. law and binding international agreements.'' [15] It maintains that it is entitled under U.S. law and international trade agreements to obtain transmission services in the United States on the same terms as U.S. public utilities.

In claiming irreparable harm, Ontario Hydro asserts that—

> [i]t would be a mistake for the Commission to focus narrowly on data from sales under the old order in assessing the injury caused by the Open-Access Condition, since the injury to Ontario Hydro will occur under the new open-access regulatory regime * * *. Ontario Hydro expects to sell power to many of these power marketers and other non-border utility merchant organizations, if the Open-Access Condition is stayed and Ontario Hydro is not forced to sell only to U.S. border utilities. [16]

Ontario Hydro adds that even though it has made sales since issuance of Order No. 888, these sales will ''dwindle away'' once U.S. utilities are aware of their right to deny foreign utilities transmission access because of the reciprocity condition.

Ontario Hydro's response does not provide the majority of the specific information requested by the Commission, but instead answers the Commission's questions in only a most general manner. In response to questions concerning the derivation of its forecasted $235 million per year loss, Ontario Hydro states that its—

> [e]lectric power sales into the U.S. fall into three main categories, those in which (1) power was transmitted to the U.S. purchaser through the purchase of transmission services by the purchaser, (2) power was delivered to the U.S. purchaser through a buy-resell arrangement, and (3) power was sold directly to a U.S. border utility. Ontario Hydro's historical records of transactions are based on billing records. These detailed, auditable records state to whom energy was sold (contractually) and the revenues received. However, the records are voluminous and individual sales data cannot be provided to the Commission in response to the May 16 Order. However, based on the experience of Ontario Hydro personnel in the Interconnect Markets Department, Ontario Hydro believes that approximately one-third of sales fall into the first two categories above, *i.e.*, have not been to an interconnected U.S. border utility—at least with respect to 1997 year-to-date sales. Most of the sales to interconnected U.S. border utilities for their own use have been to Detroit Edison. [17]

Ontario Hydro then claims that it has entered into agreements with ''many'' U.S. utilities and power marketers and if it could obtain open-access transmission in the United States, ''it would be able to increase sales to these entities dramatically.'' [18]

F. Answer of Consumers and Detroit Edison to Ontario Hydro Response

On May 30, 1997, Consumers and Detroit Edison filed a joint answer to Ontario Hydro's Response. They attach to their response a copy of the international border agreement, called the Interconnection Agreement, which governs the transmission of energy from Ontario Hydro's substations on the Canadian side of the border to the Detroit Edison/Consumers substations on the U.S. side of the border and the sale of energy to the border utilities; such transmission and sales are subject to the jurisdiction of the Department of Energy (DOE). Consumers and Detroit Edison argue that Ontario Hydro's Response fails to address material aspects of the Commission's May 16 Order and provides incomplete and ambiguous responses to other aspects. They assert that Ontario Hydro failed to explain its steadily increasing buy/sell transaction sales to U.S. customers since the effective date of Order No. 888. They also assert that every one of Ontario Hydro's contracts for the sale of power to U.S. purchasers (other than a border utility) cannot be rendered void or voidable because in transactions where a border utility in a buy-sell transaction takes title to power and energy entering its system, ''the power and energy resold and transmitted in the United States is its own.'' [19] They emphasize that such arrangements are the only ones authorized under the Interconnection Agreement. Moreover, they state that while Ontario Hydro implies that it has a formal contractual arrangement with each of its U.S. customers, the language used by Ontario Hydro suggests that its agreements with U.S. customers may not be formal contracts.[20]

Consumers and Detroit Edison further argue that Ontario Hydro is seeking preferential access to transmission services in the United States and is seeking ''to build a power sales business by selling in the United States at unregulated, market-based rates without meeting any of the requirements imposed on utilities in the United States for market rate authorization.'' [21]

II. Discussion

Based on the limited information provided to us by Ontario Hydro, and in light of the additional information that has been submitted by Consumers and Detroit Edison with respect to ongoing trade with Ontario Hydro, we cannot conclude based on this record that the requested stay is warranted. The overwhelming failing of Ontario Hydro's motion for stay is that it contains not one solid figure that would indicate that Ontario Hydro is suffering or may suffer irreparable harm as the result of Order Nos. 888 and 888–A. We have carefully reviewed all of the pleadings and other information provided in this case and can only conclude that since the effective date of Order No. 888 Ontario Hydro has continued to make significant sales to U.S. purchasers contrary to its claim that ''the Open-Access Condition

[14] Ontario Hydro Response at 5–6.

[15] *Id.* at 6.

[16] Ontario Hydro Response at 7–8.

[17] Ontario Hydro Response at 9–10.

[18] Ontario Hydro Response at 10.

[19] Joint Answer at 4.

[20] Ontario Hydro failed to provide even one of the 40 ''contracts'' to which it refers.

[21] Joint Answer at 4 (footnote omitted).

will disrupt Ontario Hydro's entire $235 million per year U.S. export business, with no possibility of recovery of losses.''[22]

Additionally, from what we can glean from the filings before us, it appears that while historical trade with U.S. border utilities has not been disrupted and in fact has increased since Order No. 888 became effective, Ontario Hydro's real concern may be the potential of not being able to *increase* trade with non-border utilities in the future through the use of U.S. open access tariffs. Ironically, it is the existence of the open access tariffs required by Order No. 888 that gives rise to Ontario Hydro's ''expectation'' of growing trade in the United States. It cannot at the same time claim the benefits of open access transmission and object to one of the provisions the Commission included in Order No. 888 to ensure that competition takes place on fair terms. As discussed below, we do not believe that Ontario Hydro's potential to increase trade with U.S. non-border utilities can be said to invoke irreparable harm; moreover, we believe that to excuse Ontario Hydro from the same open access tariff provisions that apply to U.S. non-public utilities would provide an undue and anticompetitive preference to Ontario Hydro.

Justice Does Not Require a Stay

Under the Administrative Procedure Act, the Commission will grant a stay if ''justice so requires.''[23] Ontario Hydro based its motion for stay on a broad array of general statements lacking in any specificity or evidentiary support. Significantly, it failed to provide the bulk of the information the Commission sought in its May 16 Order in order to make a determination as to how the reciprocity condition might apply to Ontario Hydro, the potential dollar impact on Ontario Hydro of applying the reciprocity condition, and whether justice requires a stay. Ontario Hydro has failed to show that justice requires a stay.

Ontario Hydro has failed to demonstrate that Order Nos. 888 and 888-A have resulted or will result in the stoppage of its export trade to the United States. With regard to sales that occur through Consumers and Detroit Edison (the MECS utilities), as Consumers and Detroit Edison indicate in their Joint Preliminary Answer and Joint Answer, Ontario Hydro and the MECS utilities continue to engage in buy/sell arrangements under the Interconnection Agreement and the MECS utilities continue to provide the transmission necessary to deliver the power sold by Ontario Hydro. Based on the record before us, it appears that Ontario Hydro has not been a customer under the MECS utilities' Order No. 888 open access tariffs (thus invoking the tariff reciprocity provision), but rather the MECS border utilities either have transmitted the power pursuant to pre-existing unbundled bilateral agreements or pursuant to their own tariffs (presumably under the Order No. 888 tariff since July 9, 1996) to move the electric power purchased from Ontario Hydro to the customers designated by Ontario Hydro; in other words, the MECS utilities have been taking service under their own open access tariffs for historical trades, and Ontario Hydro has continued to make significant sales in the United States, without being subjected to the reciprocity condition.[24]

With respect to the sales that Ontario Hydro has been making in the United States, we note that from actual monthly data provided by Consumers and Detroit Edison (the only actual data provided in this proceeding) concerning Ontario Hydro's interchange transactions with MECS, Ontario Hydro has sold $58,975,770 of power to MECS during the 10 months from July 1996 (the month in which Order No. 888 became effective) to April, 1997 (the last month in which Detroit Edison had information available).[25] Moreover, for the first four months of 1997 (post Order No. 888), Ontario Hydro sold $24,821,554 of power to MECS, which is $15,178,261 more than the comparable period for 1996 (pre Order No. 888), or an increase in sales of 157 percent. Thus, rather than Ontario Hydro's dire assertions that its ''entire $235 million per year U.S. export business'' will be disrupted by Order No. 888 and that its sales will ''dwindle away'' once U.S. utilities become aware of reciprocity, based on the information in this record it appears that Ontario Hydro has actually experienced a significant increase in sales to the United States since the effectiveness of Order No. 888.

Ontario Hydro, essentially ignoring these increased sales, implies that it is not entirely concerned with the historical transactions it has undertaken with U.S. utilities, but is concerned with additional transactions that it may enter into pursuant to the open access tariffs of U.S. utilities, and that these future transactions may be jeopardized by the reciprocity condition of Order Nos. 888 and 888–A. However, in attempting to analyze this concern, we are again faced with a lack of information and the incomplete answers provided by Ontario Hydro to our questions. For example, we have no way of knowing, as discussed below, the type of transactions included in Ontario Hydro's *forecast* of ''$235 million per year U.S. export business'' and whether any of that amount may be subject to the reciprocity condition.[26] Ontario Hydro chose not to provide any derivation of that forecasted amount, even after being requested to do so by the Commission in its May 16 Order.[27] Without an understanding of the composition of the forecasted $235 million, the Commission finds it impossible to determine what portion of the $235 million may involve transactions subject to the reciprocity condition and arguably subject to loss by Ontario Hydro.

The significance of Ontario Hydro's failure to explain the derivation of the $235 million is underscored by Ontario Hydro's own explanation that its electric power sales into the United States fall into three categories: ''(1) power was transmitted to the U.S. purchaser through the purchase of transmission services by the purchaser, (2) power was delivered to the U.S. purchaser through a buy-resell arrangement, and (3) power was sold directly to a U.S. border utility.''[28] Ontario Hydro does not explain in any detail how the buy-sells under Category (2) are accomplished, including the specifics of any ''contractual or other tie'' between the ultimate purchaser and Ontario Hydro, so the Commission cannot definitively determine whether

[22] Motion for Stay at 1.

[23] 5 U.S.C. § 705 (1994).

[24] The reciprocity condition of the open access tariff (section 6 of the tariff) applies to third-party customers that take service under the tariff. As clarified in Order No. 888-A, it also applies to any third-party entity in the chain of a transaction that involves the use of an open access tariff by a third-party customer. With regard to sales through the MECS border utilities, which all appear to be buy-sell transactions, it does not appear on this record that Ontario Hydro, any of the 40 power purchasers with whom it says it has contracts, or any other third party has been a transmission customer under the MECS utilities' open access tariffs.

[25] All dollar amounts used in this order are in Canadian dollars. As reported in the Wall Street Journal of June 11, 1997, the exchange rate was $1 Canadian equals $0.7208 U.S.

[26] Similarly, Ontario Hydro referenced in its Motion for Stay an historical amount of $750 million in gross proceeds from the sale of wholesale power to U.S. purchasers over the last three years, but again failed to provide the breakdown of that amount, as requested by the Commission in its May 16 Order.

[27] The fact that its historical records of transactions are based on billing records that are voluminous, as claimed by Ontario Hydro as justification for not providing the information to the Commission, is no reason for not providing the derivation of the ''forecasted'' $235 million.

[28] Ontario Hydro Response at 9.

or not the reciprocity provision of the open access tariff would apply to this category.[29] However, even assuming that the first two categories would subject Ontario Hydro to the reciprocity condition, but not the third, as Ontario Hydro implies, it is significant to note that Ontario Hydro itself admits that only approximately one-third of its sales fall into the first two categories, thus leaving two-thirds of its sales, or approximately $157 million, under category three and not subject to reciprocity.[30] Moreover, as noted, it is not clear that the transactions that Ontario Hydro has placed in Category (2) are subject to reciprocity since Ontario Hydro has failed to inform us as to whether it, its non-border utility purchasers or a third-party intermediary would be seeking transmission access under the Order No. 888 tariff to effectuate the buy-sells, thus invoking the reciprocity condition. In either case, it appears based on this record that historical sales through the MECS utilities have continued, with the MECS utilities either transmitting power pursuant to pre-existing unbundled bilateral agreements or pursuant to their own transmission tariffs.

Because Ontario Hydro failed to provide any of the detailed information requested by the Commission, we cannot calculate how much of the alleged loss of sales falls into each of the three categories; however, we expect that the vast majority of the estimated one-third of sales falling into the first two categories actually fall into category 2 because neither Ontario Hydro nor Detroit Edison has made any reference to actual transactions under which a U.S. purchaser obtained transmission service from a border utility's open access tariff. Since Ontario Hydro's sales appear to have continued (and increased) since issuance of Order No. 888, we fail to see how there can be any significant harm to Ontario Hydro as a result of Order Nos. 888 and 888–A. The transactions with the MECS utilities have continued since the effective date of Order No. 888 and appear likely to continue. Moreover, Ontario Hydro has not demonstrated that any of its 40 agreements for sales to U.S. purchasers (other than the U.S. border utilities) cannot take place pursuant to the Interchange Agreement.

The above discussion has focused on border sales through the MECS utilities Consumers and Detroit Edison. While Ontario Hydro has made vague allegations regarding sales that would require it to use Niagara Mohawk's open access tariff, it has failed to give any detail regarding these transactions. For example, it has not described the New York border utilities through whom it would transmit power nor provided copies of any of the agreements it has with these or other U.S. utilities or customers, nor provided any other of the requested information.

Additionally, in the affidavit of Bruce D. Mackay, attached to Ontario Hydro's Motion for Stay, Ontario Hydro asserts that it responded to three specific requests for proposals (RFPs) for the supply of electric power and implies that it was not chosen because it was unable to obtain transmission service. However, seeking to clarify the circumstances involving these RFPs, the Commission sought additional information from Ontario Hydro. For whatever reason, Ontario Hydro chose not to respond to our question of whether it could not make the trades because it was denied transmission access by a U.S. transmission provider.

With regard to the *potential* inability to *increase* trade with U.S. utilities, Ontario Hydro has failed to demonstrate that this constitutes irreparable harm. There is nothing in this record to indicate that Ontario Hydro is in any worse a position than it was prior to Order No. 888, at which time it had to rely solely on voluntary transmission services from U.S. public utilities to sell to U.S. utilities other than border utilities. As noted, to our knowledge trade with border utilities has continued uninterrupted since issuance of Order No. 888. Additionally, even if we were to accept Ontario Hydro's implication that it is irreparable harm not to be able to increase trade, other than two allegations of denials of transmission access by U.S. utilities (Niagara Mohawk and Detroit Edison with respect to one transaction involving Toledo Edison), it does not appear that there has been any significant impedance to additional trade.

Additionally, contrary to Ontario Hydro's claim, we conclude that a stay would substantially harm other U.S. utilities, including Consumers and Detroit Edison, as well as U.S. non-public utilities. As required by Order No. 888, all U.S. public utilities that own, operate or control interstate transmission facilities now have open access transmission tariffs on file with the Commission that require the provision of transmission service to all eligible customers (or have sought or obtained the necessary waiver from the Commission). Eligible customers include Canadian entities. Moreover, any entity receiving transmission service (whether domestic or foreign) must agree to provide comparable transmission service to the public utility from whom it received open access transmission service unless it receives a waiver from the transmission provider or the Commission. Thus, if the reciprocity condition of Order Nos. 888 and 888–A is stayed as requested by Ontario Hydro, we would not be allowing Ontario Hydro to obtain transmission services in the United States on the *same* terms as U.S. public utilities. Rather, Ontario Hydro would be able to obtain transmission access from U.S. public utilities and compete for customers on those public utilities' transmission systems on preferential terms. U.S. public utilities would not be able to obtain reciprocal transmission service from Canadian utilities and compete for customers in Canadian markets. This less than equal treatment could cause U.S. public utilities to face a declining customer base brought about by Canadian utilities taking U.S. customers through their new-found access to U.S. markets, but without the U.S. public utilities having a similar opportunity to seek customers in Canadian markets.

U.S. non-public utilities would also be put at a disadvantage because they must also satisfy reciprocity (unless waived) as a condition of using an open access tariff. Contrary to any implication by Ontario Hydro, there is no separate ''foreign'' reciprocity provision. The reciprocity provision set forth in Order No. 888 applies to all eligible customers, whether foreign or domestic. Further, as is the case with foreign utilities, reciprocity applies to a U.S. non-public utility if any third party in the transactional chain (the power purchaser or a third-party intermediary such as a power marketer) uses the open access tariff. Thus, we are treating Ontario Hydro no differently than we are treating domestic non-public utilities, e.g., federal public power entities such as BPA, state power authorities such as New York Power Authority, and municipals and cooperatives.

Furthermore, the public interest does not favor Ontario Hydro's motion for

[29] In fact, Ontario Hydro does not give any detail for *any* of the categories. However, reciprocity (unless waived by the transmission provider or the Commission) would appear to apply to Category (1) because it would involve the use of the open access tariff by the U.S. customer that is purchasing power from Ontario Hydro. Reciprocity would not appear to apply to Category (3) because these appear to be transactions in which the border utility is the purchaser and re-sells to a U.S. customer unknown to Ontario Hydro.

[30] While Ontario Hydro provides this breakdown of sales, it indicates that the breakdown is applicable ''at least with respect to 1997 year-to-date sales,'' leaving one to guess the breakdown of its $235 million forecast. Moreover, Ontario Hydro fails to provide the Commission with the year-to-date sales to which it refers.

stay. As described above, a stay would unfairly permit Canadian utilities to compete in U.S. markets, but deprive U.S. utilities of the opportunity to likewise compete in Canadian markets. This unequal treatment could detrimentally affect the financial well-being of U.S. public utilities. It also would give Canadian utilities a preferential advantage over U.S. non-public utilities that seek to compete with public utilities in U.S. markets. Further, we note that Ontario Hydro is the only Canadian utility that has sought a stay and claimed any harm from Order Nos. 888 and 888–A.[31]

On the other hand, a denial of the stay would not have such potentially dire consequences. Ontario Hydro would still be permitted to continue the buy/sell transactions with MECS (and possibly with other border utilities), which, as we described in detail above, are continuing to occur at greater levels than prior to the effectiveness of Order No. 888.

Moreover, Ontario Hydro has the option to obtain open access transmission in the United States in return for providing transmission access only to those public utilities from whom it receives service. As we have repeatedly explained, this does not require Ontario Hydro to offer an open access tariff that is available to any eligible customer, but permits Ontario Hydro simply to negotiate comparable transmission access for the public utility from whom it seeks transmission service.[32]

Finally, Ontario Hydro's arguments as to the legal sufficiency of Order No. 888 are unavailing. First, Ontario Hydro asserts that the Commission does not have the authority to place conditions on the import of power from Canada. The Commission, however, has placed no conditions on the *import* of power from Canada. The reciprocity condition applies solely to the transmission of electric energy in interstate commerce and treats Canadian entities the same as any non-public utility in the United States. The question of whether Canadian power may be imported into the United States remains subject to the U.S. Department of Energy's jurisdiction and is unaffected by Order Nos. 888 and 888–A. Similarly, imports of U.S. power into Canada remain subject to Canadian jurisdiction and are unaffected by Order Nos. 888 and 888–A. Moreover, as the Commission explained in Order No. 888–A, ''[j]ust as we are not asserting jurisdiction over domestic non-public utilities under sections 205 or 206 of the FPA, we also are not asserting jurisdiction over foreign entities. Rather, we are simply placing the same reasonable and fair condition on both types of entities' uses of the transmission ordered in the Final Rule.'' [33]

Second, Ontario Hydro cites a recent U.S. Court of Appeals decision that it claims prevents the Commission from placing conditions on non-jurisdictional entities and business practices.[34] It further asserts that while section 211 of the FPA gives the Commission limited authority to order wheeling by U.S. non-public utilities, it does not provide the Commission with authority to regulate power imports or exports. Ontario Hydro's citation to *Altamont* is simply not pertinent to this proceeding. Its second assertion, while true, is irrelevant.

In *Altamont*, the Court addressed the Commission's conditioning authority under section 7 of the Natural Gas Act (NGA) and found that the Commission could not condition a jurisdictional pipeline's certificate in order to affect state regulatory practices and policies.[35] *Altamont* dealt with the narrow question of the scope of Commission and state jurisdiction under section 1(c) of the NGA.

The situation here is in an entirely different context. The Commission has required all public utilities to provide open access transmission to all eligible customers, including non-jurisdictional Canadian utilities such as Ontario Hydro. However, as a condition of receiving the benefits of this new service, eligible customers that are non-public utilities must agree to provide comparable transmission service to the public utility from whom they receive service. There is no requirement that a non-public utility customer provide open access to all eligible customers, as the Commission required of public utilities. In adopting this reciprocity condition, the Commission explained that—

> [w]hile we do not take issue with the rights these non-public utilities may have under other laws, we will not permit them open access to jurisdictional transmission without offering comparable service in return. We believe the reciprocity requirement strikes an appropriate balance by limiting its application to circumstances in which the non-public utility seeks to take advantage of open access on a public utility's system. [36]

Additionally, because transmission providers can waive the tariff reciprocity provision, the net effect of the provision is no different than the situation prior to Order No. 888 when all transmission service (other than pursuant to section 211) was at the voluntary discretion of the transmission owner.

As to Ontario Hydro's second assertion, Ontario Hydro has misread Order Nos. 888 and 888-A. Nowhere in those orders has the Commission asserted any jurisdiction (section 211 or 205) over domestic non-public utilities. Indeed, it has no jurisdiction over U.S. non-public utilities under section 205 and it can assert section 211 jurisdiction over such utilities only upon application. Additionally, nowhere in those orders has the Commission asserted jurisdiction over foreign imports or exports. Rather, as the Commission explained in Order Nos. 888 and 888–A, we are simply placing a reasonable and fair condition on domestic non-public utilities' and foreign utilities' uses of open access transmission that U.S. public utilities are required to provide.

Ontario Hydro further claims that the reciprocity condition violates the U.S. national treatment obligations under NAFTA and GATT. The Commission fully responded to this argument in Order No. 888–A in response to Ontario Hydro's rehearing request.[37] We explained that—

> [w]e disagree with Ontario Hydro's claim that NAFTA's national treatment principle requires us to allow a Canadian transmission-owning entity (or its corporate affiliate) to take advantage of a United States public utility's open access tariff—a tariff we have

[31] The Commission has found that Hydro-Quebec's transmission tariff meets the reciprocity provision of Order No. 888. *See* H.Q. Energy Services (U.S.) Inc., 79 FERC ¶ 61,152 (1997).

[32] While Ontario Hydro recognizes this limited reciprocal access, it asserts that under NAFTA and GATT, ''Ontario Hydro cannot provide open-access transmission services to any entity on an ad hoc basis, because all U.S. entities could expect and demand full access to such services if Ontario Hydro provides them to any one entity. That is the meaning of national treatment.'' Ontario Hydro Response at 11. We disagree with Ontario Hydro's interpretation of national treatment. National treatment means that each country must treat the goods of the other countries no less favorably than the most favorable treatment afforded to its own like goods. NAFTA, Article 301. Thus, unless Canadian law requires a Canadian utility to provide *open access* transmission service (that is, transmission to all eligible customers) to all Canadian utilities, such Canadian utility need not provide *open access* transmission service to any U.S. utility or to any Canadian utility. Additionally, as noted, the open access tariff reciprocity provision does not require *open access* service; rather it limits reciprocal service only to those transmission providers from whom the Order No. 888 tariff user obtains service.

[33] FERC Stats. & Regs. ¶ 31,048 at 30,292.

[34] Motion for Stay at 10–11 (citing *Altamont*).

[35] The court explained that the Hinshaw Amendment, section 1(c) of the NGA, 15 U.S.C. § 717(c), ''provides that intrastate rates and services, such as those of PG&E in this case, are exempt from Commission scrutiny.'' 92 F.3d at 1243.

[36] FERC Stats. & Regs. ¶ 31,036 at 31,762.

[37] FERC Stats. & Regs. ¶ 31,048 at 30,291–92.

required the utility to adopt—while simultaneously refusing to allow the United States utility to use the Canadian entity's transmission facilities.[38]

We emphasized that Ontario Hydro's interpretation would twist the national treatment concept ''into a requirement that Canadian entities be treated better than United States entities, including United States non-public utilities that are subject to the reciprocity condition.'' [39] Under Order Nos. 888 and 888–A, the same reciprocity condition applies to foreign utilities as applies to U.S. non-public utilities.[40] Ontario Hydro's reading of NAFTA, however, [w]ould place transmission-owning Canadian entities (or their corporate affiliates) in a *better* position that any domestic entity; not only would Canadian entities not be subject to the open access requirement, but, unlike domestic non-public utilities, they would be able to use the open access tariffs we have mandated without providing *any* reciprocal service. Ontario Hydro has cited no precedent demonstrating that NAFTA imposes such an unreasonable requirement.[41]

The Commission Orders: Ontario Hydro's motion for stay is hereby denied.

By the Commission.

Lois D. Cashell,

Secretary.

[FR Doc. 97–17800 Filed 7–8–97; 8:45 am]

BILLING CODE 6717–01–P

[38] FERC Stats. & Regs. ¶ 31,048 at 30,291.

[39] *Id.*

[40] Ontario Hydro's citation to Conference of State Bank Supervisors v. Conover, 715 F.2d 604 (D.C. Cir. 1983), *cert. denied,* 466 U.S. 927 (1984), as prohibiting a reciprocity condition is entirely inapposite. This case dealt with the International Banking Act, a federally enacted statute, which the court explained ''sought to provide foreign banks with 'national treatment' under which 'foreign enterprises * * * are treated as competitive equals with their domestic counterparts.' '' 715 F.2d at 606. The court found that an individual state's attempt to impose state reciprocity requirements on a federally-chartered foreign bank would conflict with the national treatment provided under the federal act and thus was precluded. *Id.* at 617. No such state/federal conflict exists with respect to the reciprocity condition set forth in Order Nos. 888 and 888–A.

[41] FERC Stats. & Regs. ¶ 31,048 at 30,291–92.

PENSION BENEFIT GUARANTY CORPORATION

29 CFR PART 4007

RIN: 1212–AA66

Disclosure of Premium-Related Information

AGENCY: Pension Benefit Guaranty Corporation.

ACTION: Final rule.

SUMMARY: The Pension Benefit Guaranty Corporation is amending its premium payment regulation to provide for the submission to the PBGC of information contained in records relating to premium filings. The amendment is intended to assist the PBGC in obtaining timely information for premium audits.

EFFECTIVE DATE: August 8, 1997.

FOR FURTHER INFORMATION CONTACT: Harold J. Ashner, Assistant General Counsel, or James L. Beller, Attorney, Pension Benefit Guaranty Corporation, Office of the General Counsel, Suite 340, 1200 K Street, NW., Washington, DC 20005–4026, 202–326–4024 (202–326–4179 for TTY and TDD).

SUPPLEMENTARY INFORMATION: On December 17, 1996, the PBGC published in the **Federal Register** (61 FR 66247) a proposed rule to provide for submission to the PBGC of plan records that are necessary to support premium filings within 30 days of the date of the PBGC's request, or by a different time specified in the request. The PBGC received three comments, all of which stated that the 30-day time period was too short for large, multi-location companies because of the need to gather data from different locations.

Most companies do not have special problems and can comply within a short period of time. The PBGC recognizes that, due to delays in the mail and other circumstances, companies may need more than 30 days to comply, and has therefore replaced the 30-day time period with a 45-day time period. For companies that, for valid reasons (*e.g.*, difficulty in retrieving off-site files) are unable to provide the records within 45 days, the final rule provides an automatic extension of up to an additional 45 days. To qualify for the extension, the plan administrator must certify that, despite reasonable efforts, the additional time is necessary to comply with the PBGC's request. The PBGC may shorten the original or extended deadline if the collection of unpaid premiums (or any associated interest or penalties) would be jeopardized.

Paperwork Reduction Act

This rule contains information collection requirements. As required by the Paperwork Reduction Act of 1995, the PBGC has submitted a copy of this information collection to the Office of Management and Budget for its review. Affected parties do not have to comply with the information collection requirements of this rule until the PBGC publishes in the **Federal Register** the control number assigned by OMB to this information collection. Publication of the control number notifies the public that OMB has approved these information collection requirements.

E.O. 12866 and the Regulatory Flexibility Act

The PBGC has determined that this rule is not a ''significant regulatory action'' under the criteria set forth in Executive Order 12866.

The PBGC certifies that the amendment will not have a significant economic effect on a substantial number of small entities. This rule merely changes the manner in which the plan administrator complies with an existing requirement to provide PBGC with information. Sending that information to the PBGC instead of making it available for on-site review by the PBGC will not impose any significant additional burden on the plan administrator. Accordingly, as provided in section 605(b) of the Regulatory Flexibility Act, sections 603 and 604 do not apply.

Small Business Regulatory Enforcement Fairness Act of 1996

This rule is not a major rule as defined by section 804 of the Small Business Regulatory Enforcement Fairness Act of 1996. This rule will not result in an annual effect on the economy of $100 million or more; a major increase in costs or prices; or significant adverse effects on competition, employment, investment, productivity, innovation, or on the ability of the United States-based companies to compete with foreign-based companies in domestic and export markets.

List of Subjects in 29 CFR Part 4007

Penalties, Pension insurance, Pensions, Reporting and recordkeeping requirements.

For the reasons set forth above, the PBGC is amending 29 CFR part 4007 as follows:

PART 4007—PAYMENT OF PREMIUMS

1. The authority citation for part 4007 is revised to read as follows:

Authority: 29 U.S.C. 1302(b)(3), 1303(a), 1306, 1307.

2. In § 4007.10, the section heading is revised; paragraph (a) is amended by removing the last sentence; and new paragraphs (c) and (d) are added, to read as follows:

§ 4007.10 Recordkeeping; audits; disclosure of information.

* * * * *

(c) *Providing record information. (1) In general.* The plan administrator shall

make the records retained pursuant to paragraph (a) of this section available to the PBGC upon request for inspection and photocopying at the location where they are kept (or another, mutually agreeable, location) and shall submit information in such records to the PBGC within 45 days of the date of the PBGC's written request therefor, or by a different time specified therein.

(2) *Extension.* Except as provided in paragraph (c)(3) of this section, the plan administrator may automatically extend the period described in paragraph (c)(1) by submitting a certification to the PBGC prior to the expiration of that time period. The certification shall—

(i) Specify a date to which the time period described in paragraph (c)(1) is extended that is no more than 90 days from the date of the PBGC's written request for information; and

(ii) Contain a statement, certified to by the plan administrator under penalty of perjury (18 U.S.C. § 1001), that, despite reasonable efforts, the additional time is necessary to comply with the PBGC's request.

(3) *Shortening of time period.* The PBGC may in its discretion shorten the time period described in paragraph (c)(1) or (c)(2) of this section where it determines that collection of unpaid premiums (or any associated interest or penalties) would otherwise be jeopardized. If the PBGC shortens the time period described in paragraph (c)(1), no extension is available under paragraph (c)(2).

(d) *Address and timeliness.* Information required to be submitted under paragraph (c) of this section shall be submitted to the address specified in the PBGC's request. The timeliness of a submission shall be determined in accordance with §§ 4007.5 and 4007.6.

Issued in Washington, D.C. this 2nd day of July, 1997.

Alexis M. Herman,

Chairman, Board of Directors, Pension Benefit Guaranty Corporation.

Issued on the date set forth above pursuant to a resolution of the Board of Directors authorizing its Chairman to issue this final rule.

James J. Keightley,

Secretary, Board of Directors, Pension Benefit Guaranty Corporation.

[FR Doc. 97–17952 Filed 7–8–97; 8:45 am]

BILLING CODE 7708–01–P

ENVIRONMENTAL PROTECTION AGENCY

40 CFR Part 60

[FRL–5855–4]

Air Pollution; Standards of Performance for New Stationery Sources; Municipal Waste Combustors

AGENCY: Environmental Protection Agency (EPA).

ACTION: Revised notice of determination of part 60 applicability.

SUMMARY: The Environmental Protection Agency (EPA) has revised its determination that the 1995 ''Standards of Performance for Municipal Waste Combustors'' (Part 60, Subpart Eb) will apply to all three municipal waste combustor units in a ''waste-to-energy'' conversion project proposed by the Central Wayne Energy Recovery Limited Partnership (Central Wayne), necessary to be consistent with a recent court opinion that vacated in part the 1995 standards.

EFFECTIVE DATE: This determination took effect on June 3, 1997. Petitions for review of this determination must be filed on or before September 8, 1997 in accordance with the provisions of section 307(b)(1) of the Clean Air Act.

ADDRESSES: The related material in support of this decision may be examined during normal business hours at the United States Environmental Protection Agency, Air and Radiation Division, Air Enforcement and Compliance Assurance Branch, 17th Floor, 77 West Jackson Boulevard, Chicago, Illinois 60604.

FOR FURTHER INFORMATION CONTACT: Jeffrey L. Gahris of U.S. EPA Region 5, Air Enforcement and Compliance Assurance Branch (AE–17J), 77 West Jackson Boulevard, Chicago, Illinois 60604. Telephone (312) 886–6794.

SUPPLEMENTARY INFORMATION: On August 16, 1995, the Director of Wayne County, Michigan's Air Quality Management Division, requested a determination on the applicability of the New Source Performance Standards for New Stationary Sources (NSPS) to a ''waste-to-energy'' conversion project proposed by the Central Wayne Energy Limited Partnership for the municipal waste combustor facility located in Dearborn Heights, Michigan. After requesting and receiving additional clarifying information, EPA responded to Wayne County's request by means of a letter dated October 11, 1996 (62 FR 4463, January 30, 1997). EPA determined that each of the MWC units at the facility will become subject to the NSPS for municipal waste combustors (40 CFR Part 60, Subpart Eb, as promulgated on December 19, 1995). This determination was based on the NSPS and emissions guidelines that were published in the **Federal Register** on December 19, 1995, and codified at 40 CFR Part 60, Subparts Eb and Cb, respectively.

Subsequent to this determination, however, the United States Court of Appeals for the District of Columbia Circuit held that the EPA had set standards improperly for facilities with multiple MWC units, and indicated its intention to vacate the 1995 standards in their entirety. *Davis County Solid Waste Management* v. *EPA,* 101 F.3d 1395 (D.C. Cir. 1996). On March 21, 1997, the Court amended its opinion (*see* 108 F.3d 1454 (D.C. Cir. 1997)), and on April 8, 1997, the Court vacated the 1995 standards as they apply to MWC units with capacities to combust less than or equal to 250 tons per day of municipal solid waste (''small units'') and all cement kilns. The 1995 standards, however, have remained in effect for units with capacity greater than 250 tons per day (''large MWC units'') since their promulgation. Because Units 1 and 2 at Central Wayne's proposed facility each have capacities of 250 tons per day, they are small units; therefore, EPA has revised its determination to exclude Units 1 and 2 from its previous determination because Subparts Cb and Eb have been vacated as they apply to small units such as these. Unit 3, because it is a large unit unaffected by the court opinion, is not affected by this decision.

In addition, EPA's revised applicability determination provides clarification to Wayne County Department of Environment's question on how to apply emission limits in situations where several units share the same stack, which is the case for Central Wayne's facility as presently proposed. In EPA's October 11, 1996 applicability determination, EPA indicated it was EPA's policy and practice to apply the strictest standard to all of the units. In its June 3, 1997 revised applicability determination, EPA indicated that, in light of the *Davis* decision, Central Wayne may propose a redesign or reconfiguration of its facility by which it can demonstrate that each unit is in compliance with the applicable emission standards by testing while operating only one unit at time, or by any alternate means it may suggest for EPA's review and approval. If the source cannot meet this showing, then the EPA policy of applying the strictest standard will govern.

In addition to the publication of this action, EPA is placing a copy of this

determination on its Technology Transfer Network (TTN) bulletin board service.

(Sec. 111 and Sec.129, Clean Air Act (42 U.S.C. 7411))

Date: June 26, 1997.

David A. Ullrich,

Acting Regional Administrator.

[FR Doc. 97–17947 Filed 7–8–97; 8:45 am]

BILLING CODE 6560–50–U

ENVIRONMENTAL PROTECTION AGENCY

40 CFR Part 180

[OPP–300509; FRL–5728–8]

RIN 2070–AB78

Lambda-cyhalothrin; Time-Limited Pesticide Tolerance

AGENCY: Environmental Protection Agency (EPA).

ACTION: Final rule.

SUMMARY: This regulation establishes a time-limited tolerance for the combined residues of lambda-cyhalothrin and its epimer in or on rice. The names for lambda-cyhalothrin and its epimer are as follows: Lambda-cyhalothrin, a 1:1 mixture of (*S*)-alpha-cyano-3-phenoxybenzyl-(*Z*)-(1*R*,3*R*)-3-(2-chloro-3,3,3-trifluoroprop-1-enyl) -2,2-dimethylcyclopropanecarboxylate and (*R*)-alpha-cyano-3-phenoxybenzyl-(*Z*)-(1*S*,3*S*) -3-(2-chloro-3,3,3-trifluoroprop-1-enyl)-2,2-dimethylcyclopropanecarboxylate and Epimer of lambda-cyhalothrin, a 1:1 mixture of (*S*)-alpha-cyano-3-phenoxybenzyl-(*Z*)-(1*S*,3*S*)-3-(2-chloro-3,3,3- trifluoroprop-1-enyl)-2,2-dimethylcyclopropanecarboxylate and (*R*)-alpha-cyano-3-phenoxybenzyl-(*Z*)-(1*R*,3*R*)-3-(2-chloro-3,3,3-trifluoroprop-1-enyl)-2,2-dimethylcyclopropanecarboxylate. The Zeneca Ag Products requested this tolerance under the Federal Food, Drug and Cosmetic Act (FFDCA), as amended by the Food Quality Protection Act of 1966 (Pub. L. 104–170). The tolerance will expire on November 15, 1997.

DATES: This regulation is effective July 9, 1997. Objections and requests for hearings must be received by EPA on or before September 8, 1997.

ADDRESSES: Written objections and hearing requests, identified by the docket control number, [OPP–300509], must be submitted to: Hearing Clerk (1900), Environmental Protection Agency, Rm. M3708, 401 M St., SW., Washington, DC 20460. Fees accompanying objections and hearing requests shall be labeled ''Tolerance Petition Fees'' and forwarded to: EPA Headquarters Accounting Operations Branch, OPP (Tolerance Fees), P.O. Box 360277M, Pittsburgh, PA 15251. A copy of any objections and hearing requests filed withthe Hearing Clerk identified by the docket control number, [OPP–300509], must also be submitted to: Public Information and Records Integrity Branch, Information Resources and Services Division (7506C), Office of Pesticide Programs, Environmental Protection Agency, 401 M St., SW., Washington, DC 20460. In person, bring a copy of objections and hearing requests to Rm. 1132, CM #2, 1921 Jefferson Davis Hwy., Arlington, VA.

A copy of objections and hearing requests filed with the Hearing Clerk may also be submitted electronically by sending electronic mail (e-mail) to: opp-docket@epamail.epa.gov. Copies of objections and hearing requests must be submitted as an ASCII file avoiding the use of special characters and any form of encryption. Copies of objections and hearing requests will also be accepted on disks in WordPerfect 5.1 file format or ASCII file format. All copies of objections and hearing requests in electronic form must be identified by the docket control number [OPP–300509]. No Confidential Business Information (CBI) should be submitted through e-mail. Electronic copies of objections and hearing requests on this rule may be filed online at many Federal Depository Libraries.

FOR FURTHER INFORMATION CONTACT: By mail: George T. LaRocca, Product Manager (PM) 13, Registration Division (7505C), Office of Pesticide Programs, Environmental Protection Agency, 401 M St., SW., Washington, DC 20460. Office location, telephone number, and e-mail address: Crystal Mall #2, 1921 Jefferson Davis Hwy., Arlington, VA, (703) 308-6100, e-mail: larocca.george@epamail.epa.gov.

SUPPLEMENTARY INFORMATION: In the **Federal Register** of February 19, 1997 (62 FR 7454; FRL–5585–5), EPA, issued a notice pursuant to section 408 of the Federal Food, Drug, and Cosmetic Act (FFDCA), 21 U.S.C. 346a(e) announcing the filing of a pesticide petition (PP 6F4769) for tolerance by Zeneca Ag Products, 1800 Concord Pike, P.O. 15458, Wilmington, DE 19850-5458. This notice included a summary of the petition prepared by Zeneca Ag Products, the registrant. There were no comments received in response to the notice of filing.

The petition requested that 40 CFR 180.438 be amended by establishing a tolerance for combined residues of the insecticide lambda-cyhalothrin and its epimer (CAS NO. 91465–08–6; EPA Chemical NO. 128867), in or on rice grain at 1.0 parts per million (ppm), rice straw at 1.75 ppm, rice hulls at 5.0 ppm. Subsequent to this filing EPA recommended that the tolerance on rice straw be rounded off to 1.8 ppm.

I. Risk Assessment and Statutory Findings

New section 408(b)(2)(A)(i) of the FFDCA allows EPA to establish a tolerance (the legal limit for a pesticide chemical residue in or on a food) only if EPA determines that the tolerance is ''safe.'' Section 408(b)(2)(A)(ii) defines ''safe'' to mean that ''there is a reasonable certainty that no harm will result from aggregate exposure to the pesticide chemical residue, including all anticipated dietary exposures and all other exposures for which there is reliable information.'' This includes exposure through drinking water and in residential settings, but does not include occupational exposure. Section 408(b)(2)(C) requires EPA to give special consideration to exposure of infants and children to the pesticide chemical residue in establishing a tolerance and to ''ensure that there is a reasonable certainty that no harm will result to infants and children from aggregate exposure to the pesticide chemical residue. . . .''

EPA performs a number of analyses to determine the risks from aggregate exposure to pesticide residues. First, EPA determines the toxicity of pesticides based primarily on toxicological studies using laboratory animals. These studies address many adverse health effects, including (but not limited to) reproductive effects, developmental toxicity, toxicity to the nervous system, and carcinogenicity. Second, EPA examines exposure to the pesticide through the diet (e.g., food and drinking water) and through exposures that occur as a result of pesticide use in residential settings.

A. Toxicity

1. *Threshold and non-threshold effects.* For many animal studies, a dose response relationship can be determined, which provides a dose that causes adverse effects (threshold effects) and doses causing no observed effects (the ''no-observed effect level'' or ''NOEL'').

Once a study has been evaluated and the observed effects have been determined to be threshold effects, EPA generally divides the NOEL from the study with the lowest NOEL by an uncertainty factor (usually 100 or more) to determine the Reference Dose (RfD).

The RfD is a level at or below which daily aggregate exposure over a lifetime will not pose appreciable risks to human health. An uncertainty factor (sometimes called a ''safety factor'') of 100 is commonly used since it is assumed that people may be up to 10 times more sensitive to pesticides than the test animals, and that one person or subgroup of the population (such as infants and children) could be up to 10 times more sensitive to a pesticide than another. In addition, EPA assesses the potential risks to infants and children based on the weight of the evidence of the toxicology studies and determines whether an additional uncertainty factor is warranted. Thus, an aggregate daily exposure to a pesticide residue at or below the RfD (expressed as 100 % or less of the RfD) is generally considered acceptable by EPA. EPA generally uses the RfD to evaluate the chronic risks posed by pesticide exposure. For shorter term risks, EPA calculates a margin of exposure (MOE) by dividing the estimated human exposure into the NOEL from the appropriate animal study. Commonly, EPA finds MOEs lower than 100 to be unacceptable. This 100-fold MOE is based on the same rationale as the 100-fold uncertainty factor.

Lifetime feeding studies in two species of laboratory animals are conducted to screen pesticides for cancer effects. When evidence of increased cancer is noted in these studies, the Agency conducts a weight of the evidence review of all relevant toxicological data including short-term and mutagenicity studies and structure activity relationship. Once a pesticide has been classified as a potential human carcinogen, different types of risk assessments (e.g., linear low dose extrapolations or MOE calculation based on the appropriate NOEL) will be carried out based on the nature of the carcinogenic response and the Agency's knowledge of its mode of action.

2. *Differences in toxic effect due to exposure duration.* The toxicological effects of a pesticide can vary with different exposure durations. EPA considers the entire toxicity data base, and based on the effects seen for different durations and routes of exposure, determines which risk assessments should be done to assure that the public is adequately protected from any pesticide exposure scenario. Both short and long durations of exposure are always considered. Typically, risk assessments include ''acute'', ''short-term'', ''intermediate term'', and ''chronic'' risks. These assessments are defined by the Agency as follows.

Acute risk, by the Agency's definition, results from 1-day consumption of food and water, and reflects toxicity which could be expressed following a single oral exposure to the pesticide residues. High end exposure to food and water residues are typically assumed.

Short-term risk results from exposure to the pesticide for a period of 1-7 days, and therefore overlaps with the acute risk assessment. Historically, this risk assessment was intended to address primarily dermal and inhalation exposure which could result, for example, from residential pesticide applications. However, since enaction of FQPA, this assessment has been expanded to include both dietary and non-dietary sources of exposure, and will typically consider exposure from food, water, and residential uses when reliable data are available. In this assessment, risks from average food and water exposure, and high-end residential exposure, are aggregated. High-end exposures from all 3 sources are not typically added because of the very low probability of this occurring in most cases, and because the other conservative assumptions built into the assessment assure adequate protection of public health. However, for cases in which high-end exposure can reasonably be expected from multiple sources (e.g. frequent and widespread homeowner use in a specific geographical area), multiple high-end risks will be aggregated and presented as part of the comprehensive risk assessment/characterization. Since the toxicological endpoint considered in this assessment reflects exposure over a period of at least 7 days, an additional degree of conservatism is built into the assessment; i.e., the risk assessment nominally covers 1-7 days exposure, and the toxicological endpoint/NOEL is selected to be adequate for at least 7 days of exposure. (Toxicity results at lower levels when the dosing duration is increased.)

Intermediate-term risk results from exposure for 7 days to several months. This assessment is handled in a manner similar to the short-term risk assessment.

Chronic risk assessment describes risk which could result from several months to a lifetime of exposure. For this assessment, risks are aggregated considering average exposure from all sources for representative population subgroups including infants and children.

B. Aggregate Exposure

In examining aggregate exposure, FFDCA section 408 requires that EPA take into account available and reliable information concerning exposure from the pesticide residue in the food in question, residues in other foods for which there are tolerances, residues in groundwater or surface water that is consumed as drinking water, and other non-occupational exposures through pesticide use in gardens, lawns, or buildings (residential and other indoor uses). Dietary exposure to residues of a pesticide in a food commodity are estimated by multiplying the average daily consumption of the food forms of that commodity by the tolerance level or the anticipated pesticide residue level. The Theoretical Maximum Residue Contribution (TMRC) is an estimate of the level of residues consumed daily if each food item contained pesticide residues equal to the tolerance. In evaluating food exposures, EPA takes into account varying consumption patterns of major identifiable subgroups of consumers, including infants and children. The TMRC is a ''worstcase'' estimate since it is based on the assumptions that food contains pesticide residues at the tolerance level and that 100% of the crop is treated by pesticides that have established tolerances. If the TMRC exceeds the RfD or poses a lifetime cancer risk that is greater than approximately one in a million, EPA attempts to derive a more accurate exposure estimate for the pesticide by evaluating additional types of information (anticipated residue data and/or percent of crop treated data) which show, generally, that pesticide residues in most foods when they are eaten are well below established tolerances.

II. Aggregate Risk Assessment and Determination of Safety

Consistent with section 408(b)(2)(D), EPA has reviewed the available scientific data and other relevant information in support of this action, EPA has sufficient data to assess the hazards of lambda-cyhalothrin and its epimer, and to make a determination on aggregate exposure, consistent with section 408(b)(2), for a time-limited tolerance for combined residues of lambda-cyhalothrin and its epimer on rice grain at 1.0 ppm, rice straw at 1.8 ppm, and rice hulls at 5.0 ppm. EPA's assessment of the dietary exposures and risks associated with establishing the tolerance follows.

A. Toxicological Profile

EPA has evaluated the available toxicity data and considered its validity, completeness, and reliability as well as the relationship of the results of the studies to human risk. EPA has also considered available information

concerning the variability of the sensitivities of major identifiable subgroups of consumers, including infants and children. The nature of the toxic effects caused by lambda-cyhalothrin are discussed below.

1. *Acute toxicity.* Acute toxicity studies with the technical gradeof the active ingredient lambda-cyahothrin: oral LD_{50} in the rat of 79 mg/kg (males) and 56 mg/kg (females), dermal LD_{50} in the rat of 632 mg/kg (males) and 696 mg/kg females, primary eye irritation study showed mild irritation and primary dermal irritation study showed no irritation.

2. *Genotoxicity.* The following genotoxicity tests were all negative: a gene mutation assay (Ames), a mouse micronucleus assay, an in-vitro cytogenetics assay, and a gene mutation study in mouse lymphoma cells.

3. A three-generation reproduction study in rats fed diets containing 0, 10, 30, and 100 ppm with no developmental toxicity observed at 100 ppm, the highest dose tested. The maternal NOEL and LOEL (lowest observed effect level) for the study are established at 30 (1.5 mg/kg/day) and 100 ppm (5 mg/kg/day), respectively, based upon decreased parental body weight gain. The reproductive NOEL and LOEL are established at 30 (1.5 mg/kg/day) and 100 ppm (5 mg/kg/day), respectively, based on decreased pup weight gain during weaning.

4. A developmental toxicity study in rats given gavage doses of 0, 5, 10, and 15 mg/kg/day with no developmental toxicity observed under the conditions of the study. The developmental NOEL is greater than 15 mg/kg/day, the highest dose tested. The maternal NOEL and LOEL are established at 10 and 15 mg/kg/day, respectively, based on reduced body weight gain.

5. A developmental toxicity study in rabbits given gavage doses of 0, 3, 10, and 30 mg/kg/day with no developmental toxicity observed under the conditions of the study. The maternal NOEL and LOEL are established at 10 and 30 mg/kg/day, respectively based on decreased body weight gain. The developmental NOEL is greater than 30 mg/kg/day, the highest dose tested.

6. A 90-day feeding study in rats fed doses of 0, 10, 50 and 250 ppm with a NOEL of 50 ppm and a LOEL of 250 ppm based on body weight gain reduction.

7. A 21-day study in rabbits exposed dermally to doses of 0, 10, 100, and 1,000 mg/kg/day, 6 hours/day, 5 days/week with a systemic NOEL >1,000 mg/kg/kg. There were no clinical signs of systemic toxicity at any dose level tested.

8. A 12-month feeding study in dogs fed dose (by capsule) levels of 0, 0.1, 0.5, 3.5 mg/kg/day with a NOEL of 0.1 mg/kg/day. The LOEL for this study is established at 0.5 mg/kg/day based upon clinical signs of neurotoxicity.

9. A 24-month chronic feeding/carcinogenicity study with rats fed diets containing 0, 10, 50, and 250 ppm. The NOEL was established at 50 ppm and LOEL at 250 ppm based on reduced body weight gain. There were no carcinogenic effects observed under the conditions of the study.

10. A carcinogenicity study in mice fed dose levels of 0, 20, 100, or 500 ppm (0, 3, 15, or 75 mg/kg/day) in the diet for 2 years. A systemic NOEL was established at 100 ppm and systemic LOEL at 500 ppm based on decreased body weight gain in males throughout the study at 500 ppm. The EPA has classified lambda-cyhalothrin as a Group D carcinogen (not classifiable due to an equivocal finding in this study). No treatment-related carcinogenic effects were observed under the conditions of the study.

11. *Animal metabolism*. Metabolism studies in rats demonstrated that distribution patterns and excretion rates in multiple oral dose studies are similar to single-dose studies. Accumulation of unchanged compound in fat upon chronic administration with slow elimination. Otherwise, lambda-cyhalothrin was rapidly metabolized and excreted. The metabolism of lambda-cyhalothrin in livestock has been studied in the goat, chicken, and cow. Unchanged lambda-cyhalothrin is the major residue component of toxicological concern in meat and milk.

B. Toxicological Endpoints

1. *Acute toxicity.* No endpoint was selected by EPA to assess acute dietary risk. EPA determined that this risk assessment was not required since there was no acute dietary end point of concern.

2. *Short - and intermediate - term toxicity.* As part of the hazard assessment process, EPA reviews the available toxicological database to determine the endpoints of concern for non-dietary exposure. For short- and intermediate-term inhalation margin of exposure (MOE) calculations, EPA used a NOEL of 0.3 µg/l (0.05 mg/kg/day) from the 21-day inhalation toxicity study in rats. The LEL of 3.3 µg/l was based on decreased body weight gains and clinical signs of toxicity including paw flicking, tail erections and tiptoe gait. EPA did not select an end point for short and intermediate term dermal exposure since in the 21-day dermal toxicity study, the NOEL was >1,000 mg/kg/day (limit dose).

3. *Toxicity endpoint for dietary exposure—Chronic toxicity*. EPA has established the reference dose (RfD) for lambda-cyhalothrin at 0.001 milligrams/kilogram/day (mg/kg/day). This RfD is based on on a 1-year oral study in dogs with a NOEL of 0.1 mg/kg/day and an uncertainty factor (UF) of 100. The LEL of 0.5 mg/kg/day was based on clinical signs of neurotoxicity (convulsions, ataxia, muscle tremors) and a slight increase in liquid feces.

4. *Carcinogenicity*. Based on the available carcinogenicity studies in two rodent species, lambda-cyhalothrin has been classified as a Group ''D'' chemical, ''not classifiable as to human carcinogenicity.'' Although lambda-cyhalothrin was not shown to be carcinogenic in either the mouse or rat, the EPA Hazard Evaluation Division (HED) RfD/PEER review committee based the ''D'' classification on: (1) lambda-cyhalothrin was not tested at adequate dose levels for carcinogenicity testing in the mouse, and (2) the equivocal nature of the findings with regard to the incidence of mammary adenocarcinomas. No additional cancer studies are being required at this time.

C. Exposures and Risks

1. *From food and feed uses.* The primary source of human exposure to lambda-cyhalothrin will be from ingestion of both raw and processed food commodities treated with lambda-cyhalothrin. Time-limited tolerances have been established in 40 CFR 180.438, 40 CFR 185.3765 and 40 CFR 186.3765 for combined residues of lambda-cyhalothrin and its epimer in or on a variety of food commodities. Risk assessments were conducted by EPA to assess dietary exposures and risks from lambda-cyhalothrin as follows:

i. *Acute exposure and risk*. An acute risk assessment was not conducted because the Agency has not identified an acute dietary endpoint of concern for lambda-cyhalothrin.

ii. *Chronic exposure and risk*. For purposes of assessing the potential chronic dietary and risk exposure estimates (DRES) for lambda-cyhalothrin on rice, EPA estimated chronic dietary exposure based on anticipated residues and percent crop treated (7% for rice) for several, but not all, commodities. The existing lambda-cyhalothrin tolerances plus the proposed rice use resulted in an Anticipated Residue Contribution (ARC) that is equivalent to the following percentages of the RfD:

	Percent of the RfD
U.S. Population	22%
Nursing Infants (<1 year old).	25%
Non-Nursing Infants (<1 year old).	70%
Children (1-6 years old)	50%
Children (7-12 years old)	33%
Hispanics	24%
Non-hispanic Others	27%

The subgroups listed above are: (1) the U.S. population (48 states); (2) those for infants and children; and, (3) the other subgroups for which the percentage of the RfD occupied is greater than that occupied by the subgroup U.S population (48 states). As indicated above the proposed lambda-cyhalothrin tolerances result in an ARC that is up to 70% of the RfD for the most sensitive subpopulation (non-nursing infants (<1 year old)). The general population is 22 percent of the RfD.

Section 408(b)(2)(F) allows the Agency too use data on the actual percent of crop treated when establishing a tolerance only where the Agency can make the following findings: (1) that the data used are reliable and provide a valid basis for showing the percentage of food derived from a crop that is likely to contain residues; (2) that the exposure estimate does not underestimate the exposure for any significant subpopulation and; (3) where data on regional pesticide use and food consumption are available, that the exposure estimate does not understate exposure for any regional population. In addition the Agency must provide for periodic evaluation of any estimates used.

Percent of crop treated estimates are derived from federal and market survey data. EPA considers these data reliable. Typically a range of estimates are supplied and the upper end of this range is used for the exposure assessment. By using this upper end estimate of percent crop treated, EPA is reasonably certain that exposure is not underestimated for any significant subpopulation. Further, regional consumption information is taken into account through EPA's computer-based model for evaluating the exposure of significant subpopulations including several regional groups. Review of this regional data allows EPA to be reasonably certain that no regional population is exposed to residue levels higher than those estimated by EPA. EPA has made these findings when appropriate with respect to the proposed tolerance of lambda-cyhalothrin on rice. EPA has not provided for periodic reevaluation of the data on percent crop treated for lambda-cyhalothrin because this tolerance has a time-limitation.

2. *From drinking water.* Because the Agency lacks sufficient water-related exposure data to complete a comprehensive drinking water risk assessment for many pesticides, EPA has commenced and nearly completed a process to identify a reasonable yet conservative bounding figure for the potential contribution of water-related exposure to the aggregate risk posed by a pesticide. In developing the bounding figure, EPA estimated residue levels in water for a number of specific pesticides using various data sources. The Agency then applied the estimated residue levels, in conjunction with appropriate toxicological endpoints (RfD's or acute dietary NOEL's) and assumptions about body weight and consumption, to calculate, for each pesticide, the increment of aggregate risk contributed by consumption of contaminated water. While EPA has not yet pinpointed the appropriate bounding figure for exposure from contaminated water, the ranges the Agency is continuing to examine are all below the level that would cause lambda-cyhalothrin to exceed the RfD if the tolerance being considered in this document were granted. The Agency has therefore concluded that the potential exposures associated with lambda-cyhalothrin in water, even at the higher levels the Agency is considering as a conservative upper bound, would not prevent the Agency from determining that there is a reasonable certainty of no harm if the tolerance is granted.

3. *From non-dietary exposure.* Lambda-cyhalothrin is currently registered for use on the following residential non-food sites: general indoor/outdoor pest control (crack/crevice/spot), termiticide, ornamental plants and lawns around homes, parks, recreation areas and athletic fields, and golf course turf. Application of this pesticide in and around these sites is mainly limited to commercial applicators.

EPA lacks sufficient residential-related exposure data to complete a comprehensive residential risk assessment for many pesticides, including lambda-cyhalothrin. However, due to the following facts: (1) that lambda-cyhalothrin has a low vapor pressure (2×10^{-10} torr); (2) there are no acute toxicity endpoints identified; (3) no short- or intermediate-term dermal toxicity endpoint was identified; (4) high worker inhalation MOEs (which ranged from 1,000 to 6,800); and (5) the percentage of the RfD that is occupied by the pending and registered uses of this chemical is below 100; EPA has concluded that non-dietary, non-occupational uses of lambda-cyhalothrin would not pose a risk that exceeds EPA's level of concern.

4. *Cumulative exposure to substances with common mechanism of toxicity.* Section 408(b)(2)(D)(v) requires that, when considering whether to establish, modify, or revoke a tolerance, the Agency consider ''available information'' concerning the cumulative effects of a particular pesticide's residues and ''other substances that have a common mechanism of toxicity.'' The Agency believes that ''available information'' in this context might include not only toxicity, chemistry, and exposure data, but also scientific policies and methodologies for understanding common mechanisms of toxicity and conducting cumulative risk assessments. For most pesticides, although the Agency has some information in its files that may turn out to be helpful in eventually determining whether a pesticide shares a common mechanism of toxicity with any other substances, EPA does not at this time have the methodologies to resolve the complex scientific issues concerning common mechanism of toxicity in a meaningful way. EPA has begun a pilot process to study this issue further through the examination of particular classes of pesticides. The Agency hopes that the results of this pilot process will increase the Agency's scientific understanding of this question such that EPA will be able to develop and apply scientific principles for better determining which chemicals have a common mechanism of toxicity and evaluating the cumulative effects of such chemicals. The Agency anticipates, however, that even as its understanding of the science of common mechanisms increases, decisions on specific classes of chemicals will be heavily dependent on chemical specific data, much of which may not be presently available.

Although at present the Agency does not know how to apply the information in its files concerning common mechanism issues to most risk assessments, there are pesticides as to which the common mechanism issues can be resolved. These pesticides include pesticides that are toxicologically dissimilar to existing chemical substances (in which case the Agency can conclude that it is unlikely that a pesticide shares a common mechanism of activity with other substances) and pesticides that produce a common toxic metabolite (in which case common mechanism of activity will be assumed).

Although lambda-cyhalothrin is structurally similar to other members of the synthetic pyrethroid class of insecticides, EPA does not have, at this time, available data to determine whether lambda-cyhalothrin has a common mechanism of toxicity with other substances or how to include this pesticide in a cumulative risk assessment. Unlike other pesticides for which EPA has followed a cumulative risk approach based on a common mechanism of toxicity, lambda-cyhalothrin does not appear to have a toxic metabolite produced by other substances. For the purposes of this tolerance action, therefore, EPA has not assumed that lambda-cyhalothrin has a common mechanism of toxicity with other substances.

C. Aggregate Risks and Determination of Safety for U.S. Population

1. *Acute risks.* As indicated above, a risk assessment was not conducted because EPA has not identified an acute toxicity dietary endpoint for lambda-cyhalothrin.

2. *Chronic risk.* Using the exposure assumptions and risks described above, and taking into account the completeness and reliability of the toxicity data, EPA has concluded that dietary exposure to lambda-cyhalothrin will utilize 22% of the RfD for the U.S. population. EPA generally has no concern for exposures below 100% of the RfD because the RfD represents the level at or below which daily aggregate dietary exposure over a lifetime will not pose appreciable risks to human health. Despite the potential for exposure to lambda-cyhalothrin in drinking water and via residential uses, EPA does not expect the aggregate exposure to exceed 100% of the RfD. EPA concludes that there is a reasonable certainty that no harm will result from aggregate exposure to lambda-cyhalothrin residues.

D. Aggregate Cancer Risk for U.S. Population

Lambda-cyhalothrin has been classified by EPA as a Group ''D'' chemical, ''not classifiable as to human carcinogenicity''. Therefore, this risk assessment was not conducted.

E. Aggregate Risks and Determination of Safety for Infants and Children

In assessing the potential for additional sensitivity of infants and children to residues of lambda-cyhalothrin, EPA considered data from developmental toxicity studies in rats and rabbits and a 3-generation reproductive toxicity study in rats. The developmental toxicity studies are designed to evaluate adverse effects on the developing organism resulting from maternal pesticide exposure during prenatal development. Reproduction studies provide information relating to pre- and post-natal effects from exposure to the pesticide, information on the reproductive capability of mating animals, and data on systemic toxicity.

FFDCA section 408 provides that EPA shall apply an additional tenfold margin of safety for infants and children in the case of threshold effects to account for pre-and post-natal toxicity and the completeness of the database unless EPA determines that a different margin of safety will be safe for infants and children. Margins of safety are incorporated into EPA risk assessments either directly through use of a margin of exposure analysis or through using uncertainty (safety) factors in calculating a dose level that poses no appreciable risk to humans. In either case, EPA generally defines the level of appreciable risk as exposure that is greater than 1/100 of the no observed effect level (NOEL) in the animal study appropriate to the particular risk assessment. This 100-fold uncertainty (safety) factor is designed to account for inter-species extrapolation and intra-species variability. EPA believes that reliable data support using the standard 100-fold factor when EPA has a complete data base under existing guidelines and when the severity of the effect in infants or children or the potency or unusual toxic properties of a compound do not raise concerns regarding the adequacy of the standard factor.

1. *Developmental toxicity studies.* a. From the developmental toxicity study in rats, the maternal (systemic) NOEL was 10 mg/kg/day. The maternal LEL of 15 mg/kg/day was based on decreased body weight gain and decreased food consumption. The developmental (fetal) NOEL was >15 mg/kg/day at the highest dose tested (HDT).

b. From the developmental toxicity study in rabbits, the maternal (systemic) NOEL was 10 mg/kg/day. The maternal LEL of 30 mg/kg/day was based on decreased body weight gain. The developmental (fetal) NOEL was ≧30 mg/kg/day (HDT).

2. *Reproductive toxicity studies.* From the 3-generation reproductive toxicity study in rats, both the parental (systemic) and reproductive (pup) NOEL's were 1.5 mg/kg/day. Both the parental (systemic) and reproductive (pup) LEL's were 5 mg/kg/day. They were based on a significant decrease in parental body weight (systemic) or a significant decrease in pup body weight.

3. *Pre- and post-natal sensitivity.*The toxicology data base for lambda-cyhalothrin is complete with respect to current toxicological data requirements. There are no pre- or post-natal toxicity concerns for infants and children, based on the results of the rat and rabbit developmental toxicity studies and the 3-generation reproductive toxicity study in rats.

Based on the above, EPA concludes that reliable data support the use of the standard 100-fold margin of uncertainty factor and that an additional uncertainty factor is not warranted at this time.

4. *Acute risk.* This risk assessment was not conducted because EPAhas not identified an acute toxicity dietary endpoint of concern for lambda-cyhalothrin.

5. *Chronic risk.* Using the exposure assumptions described above, EPA has concluded that the percent of the RfD that will be utilized by dietary exposure to residues of lambda-cyhalothrin ranges from 25% for nursing infants less than one year old, up to 70% for non-nursing infants less than 1 year old. Despite the potential for exposure to lambda-cyhalothrin in drinking water and via residential uses, EPA does not expect the aggregate exposure to exceed 100% of the RfD. Therefore, taking into account the completeness and reliability of the toxicity data and the conservative exposure assessment, EPA concludes that there is a reasonable certainty that no harm will result to infants and children from aggregate exposure to lambda-cyhalothrin residues.

III. Other Considerations

A. Endocrine Effects

EPA is required to develop a screening program to determine whether certain substances (including all pesticides and inerts) ''may have an effect in humans that is similar to an effect produced by a naturally occurring estrogen, or such other endocrine effect...''. The Agency is currently working with interested stakeholders, including other government agencies, public interest groups, industry and research scientists in developing a screening and testing program and a priority setting scheme to implement this program. Congress has allowed 3 years from the passage of FQPA (August 3, 1999) to implement this program. At that time, EPA may require further testing of this active ingredient and end use products for endocrine disrupter effects.

B. Metabolism In Plants and Animals

The metabolism of lambda-cyhalothrin in plants and animals is

adequately understood for the purpose of this tolerance. EPA has determined that plant and animal metabolites do not need to appear in the tolerance expression at this time. The residues to be regulated are lambda-cyhalothrin and its epimer as specified in 40 CFR 180.438.

C. Magnitude of Residues

Field residue data reflecting the application of lambda-cyhalothrin to rice are acceptable in quantity and quality and location in support of the proposed tolerances on rice grain, rice hulls, and rice straw. The existing tolerances for meat, milk, poultry and eggs are based on the transfer of residues from a worse-case diet consisting of various animal feed items containing residues of lambda-cyhalothrin and its epimer. No increase in the dietary burden of poultry and ruminants is expected from use on rice. Therefore, any secondary residues that might result in milk, meat, poultry and eggs would be covered by the existing tolerances on these commodities.

D. Analytical Enforcement Methodology

There is a practical analytical method available for determination of residues of lambda-cyhalothrin and its epimer. Adequate enforcement methodology (gas chromatography/electron capture detector) for plant and animal commodities is available to enforce the tolerances. EPA will provide information on this method to FDA. In the interim, the analytical method is available to anyone who is interested in pesticide residue enforcement from: By mail, Calvin Furlow, Public Information and Records Integrity Branch, Information Resources and Services Division (7506C), Office of Pesticide Programs, Environmental Protection Agency, 401 M St. SW., Washington, DC 20460. Office location and telephone number: Crystal Mall #2, Rm 1128, 1921 Jefferson Davis Hwy., Arlington, VA 22202, 703–305–5805.

E. International Residue Limits

There are no Codex, Canadian, or Mexican maximum residue limits (MRLs) for residues of lambda-cyhalothrin and its epimer in/on rice. Therefore, international harmonization is not an issue for this tolerance.

F. Rotational Crop Restrictions

Studies submitted in support of lambda-cyhalothrin registration show that significant residues (<0.01 ppm) will not be present in crops rotated 30 days after application of parent lambda-cyhalothrin. No additional rotational crop data are needed to support current registered application rates.

IV. Conclusion

A time limited tolerance is being established for lambda-cyhalothrin and its epimer, in/or on rice grain at 1.0 ppm, rice straw at 1.8 ppm, and rice hulls at 5.0 ppm. Tolerances are time limited to allow development and review of drinking water and cumulative exposure data. Based upon the information and data considered EPA concludes that the proposed time limited tolerances will be safe. Therefore the tolerances are established as set forth in this document.

V. Objections and Hearing Requests

The new FFDCA section 408(g) provides essentially the same process for persons to object'' to a tolerance regulation issued by EPA under new section 408(e) and (l)(6) as was provided in the old section 408 and in section 409. However, the period for filing objections is 60 days, rather than 30 days. EPA currently has procedural regulations which govern the submission of objections and hearing requests. These regulations will require some modification to reflect the new law. However, until those modifications can be made, EPA will continue to use those procedural regulations with appropriate adjustments to reflect the new law.

Any person may, by September 8, 1997, file written objections to any aspect of this regulation and may also request a hearing on those objections. Objections and hearing requests must be filed with the Hearing Clerk, at the address given above (40 CFR 178.20). A copy of the objections and/or hearing requests filed with the Hearing Clerk should be submitted to the OPP docket for this rulemaking. The objections submitted must specify the provisions of the regulation deemed objectionable and the grounds for the objections (40 CFR 178.25). Each objection must be accompanied by the fee prescribed by 40 CFR 180.33(I). If a hearing is requested, the objections must include a statement of the factual issues on which a hearing is requested, the requestor's contentions on such issues, and a summary of any evidence relied upon by the requestor (40 CFR 178.27). A request for a hearing will be granted if the Administrator determines that the material submitted shows the following: There is genuine and substantial issue of fact; there is a reasonable possibility that available evidence identified by the requestor would, if established, resolve one or more of such issues in favor of the requestor, taking into account uncontested claims or facts to the contrary; and resolution of the factual issues in the manner sought by the requestor would be adequate to justify the action requested (40 CFR 178.32). Information submitted in connection with an objection or hearing request may be claimed confidential by marking any part or all of that information as Confidential Business Information (CBI). Information so marked will not be disclosed except in accordance with procedures set forth in 40 CFR part 2. A copy of the information that does not contain CBI must be submitted for inclusion in the public record. Information not marked confidential may be disclosed publicly by EPA without prior notice.

VI. Public Docket

EPA has established a record for this rulemaking under docket control number [OPP–300509] (including any comments and data submitted electronically). A public version of this record, including printed, paper versions of electronic comments, which does not include any information claimed as CBI, is available for inspection from 8:30 a.m. to 4 p.m., Monday through Friday, excluding legal holidays. The public record is located in Room 1132 of the Public Information and Records Integrity Branch, Information Resources and Services Division (7506C), Office of Pesticide Programs, Environmental Protection Agency, Crystal Mall #2, 1921 Jefferson Davis Highway, Arlington, VA.

Electronic comments may be sent directly to EPA at:

opp-docket@epamail.epa.gov.

Electronic comments must be submitted as an ASCII file avoiding the use of special characters and any form of encryption.

The official record for this rulemaking, as well as the public version, as described above will be kept in paper form. Accordingly, EPA will transfer any copies of objections and hearing requests received electronically into printed, paper form as they are received and will place the paper copies in the official rulemaking record which will also include all comments submitted directly in writing. The official rulemaking record is the paper record maintained at the Virginia address in ''ADDRESSES'' at the beginning of this document.

VII. Regulatory Assessment Requirements

This final rule establishes a time limited tolerance under FFDCA section 408(d) in response to a petition

submitted to the Agency. The Office of Management and Budget (OMB) has exempted these types of actions from review under Executive Order 12866, entitled Regulatory Planning and Review (58 FR 51735, October 4, 1993). This final rule does not contain any information collections subject to OMB approval under the Paperwork Reduction Act (PRA), 44 U.S.C. 3501 *et seq.*, or impose any enforceable duty or contain any unfunded mandate as described under Title II of the Unfunded Mandates Reform Act of 1995 (UMRA) (Pub. L. 104-4). Nor does it require any prior consultation as specified by Executive Order 12875, entitled Enhancing the Intergovernmental Partnership (58 FR 58093, October 28, 1993), or special considerations as required by Executive Order 12898, entitled Federal Actions to Address Environmental Justice in Minority Populations and Low-Income Populations (59 FR 7629, February 16, 1994), or require OMB review in accordance with Executive Order 13045, entitled Protection of Children from Environmental Health Risks and Safety Risks (62 FR 19885, April 23, 1997).

In addition, since these tolerances and exemptions that are established on the basis of a petition under FFDCA section 408(d), such as the time limited tolerance in this final rule, do not require the issuance of a proposed rule, the requirements of the Regulatory Flexibility Act (RFA) (5 U.S.C. 601 *et seq.*) do not apply. Nevertheless, the Agency has previously assessed whether establishing tolerances, exemptions from tolerances, raising tolerance levels or expanding exemptions might adversely impact small entities and concluded, as a generic matter, that there is no adverse economic impact. The factual basis for the Agency's generic certification for tolerance actions published on May 4, 1981 (46 FR 24950) and was provided to the Chief Counsel for Advocacy of the Small Business Administration.

VIII. Submission to Congress and the General Accounting Office

Under 5 U.S.C. 801(a)(1)(A), as added by the Small Business Regulatory Enforcement Fairness Act of 1996, the Agency has submitted a report containing this rule and other required information to the U.S. Senate, the U.S. House of Representatives, and the Comptroller General of the General Accounting Office prior to publication of this rule in today's **Federal Register**. This is not a ''major rule'' as defined by 5 U.S.C. 804(2).

List of Subjects in 40 CFR Part 180

Environmental protection, Administrative practice and procedure, Agricultural commodities, Pesticides and pests, Reporting and recordkeeping requirements.

Dated: June 25, 1997.

James Jones,

Acting Director, Registration Division, Office of Pesticide Programs.

Therefore, 40 CFR chapter I is amended as follows:

PART 180 [AMENDED]

1. The authority citation for part 180 continues to read as follows:

Authority : 21 U.S.C. 346a and 371.

2. Section 180.438 is revised to read as follows:

§ 180.438 Lambda-cyhalothrin; tolerances for residues.

(a) *General.* Time limited tolerances are established for residues of the insecticide lambda-cyhalothrin, a 1:1 mixture of (*S*)-alpha-cyano-3-phenoxybenzyl-(*Z*)-(1*R*,3*R*)-3-(2-chloro-3,3,3-trifluoroprop-1-enyl) -2,2-dimethylcyclopropanecarboxylate and (*R*)-alpha-cyano-3-phenoxybenzyl-(*Z*)-(1*S*,3*S*)-3-(2-chloro-3,3,3-trifluoroprop-1-enyl)-2,2-dimethylcyclopropanecarboxylate and the Epimer of lambda-cyhalothrin, a 1:1 mixture of (*S*)-alpha-cyano-3-phenoxybenzyl-(*Z*)-(1*S*,3*S*)-3-(2-chloro-3,3,3- trifluoroprop-1-enyl)-2,2-dimethylcyclopropanecarboxylate and (*R*)-alpha-cyano-3-phenoxybenzyl-(*Z*)-(1*R*,3*R*)-3-(2-chloro-3,3,3-trifluoroprop-1-enyl)-2,2-dimethylcyclopropanecarboxylate on plants, as indicated in the following table. The tolerance will expire on the date specified in the following table.

Commodity	Parts per million	Expiration/Revocation Date
Rice grain	1.0	November 15, 1997
Rice straw	1.8	November 15, 1997
Rice, Hulls	5.0	November 15, 1997

(b) *Section 18 emergency exemptions.* [Reserved]

(c) *Tolerances with regional registrations.* [Reserved]

(d) *Indirect or inadvertent residues.* [Reserved]

[FR Doc. 97–17591 Filed 7–8–97; 8:45 am]

BILLING CODE 6560–50–F

ENVIRONMENTAL PROTECTION AGENCY

40 CFR Part 180

[OPP–300510; FRL–5729–3]

RIN 2070–AB78

Myclobutanil; Pesticide Tolerances for Emergency Exemptions

AGENCY: Environmental Protection Agency (EPA).

ACTION: Final rule.

SUMMARY: This regulation establishes a time-limited tolerance for combined residues of myclobutanil in or on peppers (bell and non-bell), peppermint and spearmint. This action is in response to EPA's granting of an emergency exemption under section 18 of the Federal Insecticide, Fungicide, and Rodenticide Act authorizing use of the pesticide on peppers (bell and non-bell) in California and peppermint and spearmint in Idaho and Washington. This regulation establishes a maximum permissible level for residues of myclobutanil in these food commodities pursuant to section 408(l)(6) of the Federal Food, Drug, and Cosmetic Act, as amended by the Food Quality Protection Act of 1996. These tolerances will expire and are revoked on July 1, 1998.

DATES: This regulation is effective July 9, 1997. Objections and requests for hearings must be received by EPA on or before September 8, 1997.

ADDRESSES: Written objections and hearing requests, identified by the docket control number, [OPP–300510], must be submitted to: Hearing Clerk (1900), Environmental Protection Agency, Rm. M3708, 401 M St., SW., Washington, DC 20460. Fees accompanying objections and hearing requests shall be labeled ''Tolerance Petition Fees'' and forwarded to: EPA Headquarters Accounting Operations Branch, OPP (Tolerance Fees), P.O. Box 360277M, Pittsburgh, PA 15251. A copy of any objections and hearing requests filed with the Hearing Clerk identified by the docket control number, [OPP–300510], must also be submitted to: Public Information and Records Integrity Branch, Information Resources and Services Division (7506C), Office of Pesticide Programs, Environmental Protection Agency, 401 M St., SW., Washington, DC 20460. In person, bring a copy of objections and hearing requests to Rm. 1132, CM #2, 1921 Jefferson Davis Hwy., Arlington, VA.

A copy of objections and hearing requests filed with the Hearing Clerk may also be submitted electronically by sending electronic mail (e-mail) to: opp-docket@epamail.epa.gov. Copies of objections and hearing requests must be submitted as an ASCII file avoiding the use of special characters and any form of encryption. Copies of objections and hearing requests will also be accepted on disks in WordPerfect 5.1 file format or ASCII file format. All copies of objections and hearing requests in electronic form must be identified by the docket control number [OPP–300510]. No Confidential Business Information (CBI) should be submitted through e-mail. Electronic copies of objections and hearing requests on this rule may be filed online atmany Federal Depository Libraries.

FOR FURTHER INFORMATION CONTACT: By mail: Andrew Ertman, Registration Division, 7505C, Office of Pesticide Programs, Environmental Protection Agency, 401 M St., SW., Washington, DC 20460. Office location, telephone number, and e-mail address: Crystal Mall #2, 1921 Jefferson Davis Hwy., Arlington, VA, (703) 308-9367, e-mail: ertman.andrew@epamail.epa.gov.

SUPPLEMENTARY INFORMATION: EPA, on its own initiative, pursuant to section 408(e) and (l)(6) of the Federal Food, Drug, and Cosmetic Act (FFDCA), 21 U.S.C. 346a(e) and (l)(6), is establishing a tolerance for combined residues of the fungicide myclobutanil, in or on peppers (bell and non-bell) at 1.0 ppm, peppermint at 2.5 ppm and spearmint at 2.5 ppm. These tolerances will expire and are revoked on July 1, 1998. EPA will publish a document in the **Federal Register** to remove the revoked tolerances from the Code of Federal Regulations.

I. Background and Statutory Authority

The Food Quality Protection Act of 1996 (FQPA) (Pub. L. 104–170) was signed into law August 3, 1996. FQPA amends both the Federal Food, Drug, and Cosmetic Act (FFDCA), 21 U.S.C. 301 *et seq.*, and the Federal Insecticide, Fungicide, and Rodenticide Act (FIFRA), 7 U.S.C. 136 *et seq.* The FQPA amendments went into effect immediately. Among other things, FQPA amends FFDCA to bring all EPA pesticide tolerance-setting activities under a new section 408 with a new safety standard and new procedures. These activities are described below and discussed in greater detail in the final rule establishing the time-limited tolerance associated with the emergency exemption for use of propiconazole on sorghum (61 FR 58135, November 13, 1996)(FRL–5572–9).

New section 408(b)(2)(A)(I) of the FFDCA allows EPA to establish a tolerance (the legal limit for a pesticide chemical residue in or on a food) only if EPA determines that the tolerance is ''safe.'' Section 408(b)(2)(A)(ii) defines ''safe'' to mean that ''there is a reasonable certainty that no harm will result from aggregate exposure to the pesticide chemical residue, including all anticipated dietary exposures and all other exposures for which there is reliable information.'' This includes exposure through drinking water and in residential settings, but does not include occupational exposure. Section 408(b)(2)(C) requires EPA to give special consideration to exposure of infants and children to the pesticide chemical residue in establishing a tolerance and to ''ensure that there is a reasonable certainty that no harm will result to infants and children from aggregate exposure to the pesticide chemical residue. . . .''

Section 18 of FIFRA authorizes EPA to exempt any Federal or State agency from any provision of FIFRA, if EPA determines that ''emergency conditions exist which require such exemption.'' This provision was not amended by FQPA. EPA has established regulations governing such emergency exemptions in 40 CFR part 166.

Section 408(l)(6) of the FFDCA requires EPA to establish a time-limited tolerance or exemption from the requirement for a tolerance for pesticide chemical residues in food that will result from the use of a pesticide under an emergency exemption granted by EPA under section 18 of FIFRA. Such tolerances can be established without providing notice or period for public comment.

Because decisions on section 18-related tolerances must proceed before EPA reaches closure on several policy issues relating to interpretation and implementation of the FQPA, EPA does not intend for its actions on such tolerance to set binding precedents for the application of section 408 and the new safety standard to other tolerances and exemptions.

II. Emergency Exemption for Myclobutanil on Peppers (bell and non-bell), Peppermint and Spearmint and FFDCA Tolerances

The state of California requested a specific exemption for the use of myclobutanil on bell and non-bell peppers to control a species of powdery mildew new to the crop as of the early 1990's. Powdery mildew is a pathogen that can cause substantial losses in peppers.

The states of Idaho and Washington have requested exemptions for the use of myclobutanil on mint to control powdery mildew. Significant economic losses are expected to occur without the use of myclobutanil as both yields and prices of mint oil may be reduced.

EPA has authorized under FIFRA section 18 the use of myclobutanil on peppers (bell and non-bell) for control of powdery mildew (*Oidiopsis taurica*) in California and peppermint and spearmint for control of powdery mildew (*Erysiphe cichoracearum*) in Idaho and Washington. After having reviewed these submissions, EPA concurs that emergency conditions exist for these states.

As part of its assessment of this emergency exemption, EPA assessed the potential risks presented by residues of myclobutanil in or on bell and non-bell peppers, peppermint and spearmint. In doing so, EPA considered the new safety standard in FFDCA section 408(b)(2), and EPA decided that the necessary tolerances under FFDCA section 408(l)(6) would be consistent with the new safety standard and with FIFRA section 18. Consistent with the need to move quickly on the emergency exemption in order to address an urgent non-routine situation and to ensure that the resulting food is safe and lawful, EPA is issuing these tolerances without notice and opportunity for public comment under section 408(e), as provided in section 408(l)(6). Although these tolerances will expire and are

revoked on July 1, 1998, under FFDCA section 408(l)(5), residues of the pesticide not in excess of the amounts specified in the tolerances remaining in or on peppers (bell and non-bell), peppermint and spearmint after that date will not be unlawful, provided the pesticide is applied in a manner that was lawful under FIFRA. EPA will take action to revoke these tolerances earlier if any experience with, scientific data on, or other relevant information on this pesticide indicate that the residues are not safe.

Because these tolerances are being approved under emergency conditions, EPA has not made any decisions about whether myclobutanil meets EPA's registration requirements for use on bell and non-bell peppers, peppermint and spearmint or whether permanent tolerances for these uses would be appropriate. Under these circumstances, EPA does not believe that these tolerances serve as a basis for registration of myclobutanil by a State for special local needs under FIFRA section 24(c). Nor do these tolerances serve as the basis for any States other than California (bell and non-bell peppers) and Idaho and Washington (peppermint and spearmint) to use this pesticide on these crops under section 18 of FIFRA without following all provisions of section 18 as identified in 40 CFR part 166. For additional information regarding the emergency exemption for myclobutanil, contact the Agency's Registration Division at the address provided above.

III. Risk Assessment and Statutory Findings

EPA performs a number of analyses to determine the risks from aggregate exposure to pesticide residues. First, EPA determines the toxicity of pesticides based primarily on toxicological studies using laboratory animals. These studies address many adverse health effects, including (but not limited to) reproductive effects, developmental toxicity, toxicity to the nervous system, and carcinogenicity. Second, EPA examines exposure to the pesticide through the diet (e.g., food and drinking water) and through exposures that occur as a result of pesticide use in residential settings.

A. Toxicity

1. *Threshold and non-threshold effects.* For many animal studies, a dose response relationship can be determined, which provides a dose that causes adverse effects (threshold effects) and doses causing no observed effects (the ''no-observed effect level'' or ''NOEL'').

Once a study has been evaluated and the observed effects have been determined to be threshold effects, EPA generally divides the NOEL from the study with the lowest NOEL by an uncertainty factor (usually 100 or more) to determine the Reference Dose (RfD). The RfD is a level at or below which daily aggregate exposure over a lifetime will not pose appreciable risks to human health. An uncertainty factor (sometimes called a ''safety factor'') of 100 is commonly used since it is assumed that people may be up to 10 times more sensitive to pesticides than the test animals, and that one person or subgroup of the population (such as infants and children) could be up to 10 times more sensitive to a pesticide than another. In addition, EPA assesses the potential risks to infants and children based on the weight of the evidence of the toxicology studies and determines whether an additional uncertainty factor is warranted. Thus, an aggregate daily exposure to a pesticide residue at or below the RfD (expressed as 100% or less of the RfD) is generally considered acceptable by EPA. EPA generally uses the RfD to evaluate the chronic risks posed by pesticide exposure. For shorter term risks, EPA calculates a margin of exposure (MOE) by dividing the estimated human exposure into the NOEL from the appropriate animal study. Commonly, EPA finds MOEs lower than 100 to be unacceptable. This 100-fold MOE is based on the same rationale as the 100-fold uncertainty factor.

Lifetime feeding studies in two species of laboratory animals are conducted to screen pesticides for cancer effects. When evidence of increased cancer is noted in these studies, the Agency conducts a weight of the evidence review of all relevant toxicological data including short-term and mutagenicity studies and structure activity relationship. Once a pesticide has been classified as a potential human carcinogen, different types of risk assessments (e.g., linear low dose extrapolations or MOE calculation based on the appropriate NOEL) will be carried out based on the nature of the carcinogenic response and the Agency's knowledge of its mode of action.

2. *Differences in toxic effect due to exposure duration.* The toxicological effects of a pesticide can vary with different exposure durations. EPA considers the entire toxicity data base, and based on the effects seen for different durations and routes of exposure, determines which risk assessments should be done to assure that the public is adequately protected from any pesticide exposure scenario. Both short and long durations of exposure are always considered. Typically, risk assessments include ''acute'', ''short-term'', ''intermediate term'', and ''chronic'' risks. These assessments are defined by the Agency as follows.

Acute risk, by the Agency's definition, results from 1-day consumption of food and water, and reflects toxicity which could be expressed following a single oral exposure to the pesticide residues. High-end exposure to food and water residues are typically assumed.

Short-term risk results from exposure to the pesticide for a period of 1-7 days, and therefore overlaps with the acute risk assessment. Historically, this risk assessment was intended to address primarily dermal and inhalation exposure which could result, for example, from residential pesticide applications. However, since enaction of FQPA, this assessment has been expanded to include both dietary and non-dietary sources of exposure, and will typically consider exposure from food, water, and residential uses when reliable data are available. In this assessment, risks from average food and water exposure, and high-end residential exposure, are aggregated. High-end exposures from all 3 sources are not typically added because of the very low probability of this occurring in most cases, and because the other conservative assumptions built into the assessment assure adequate protection of public health. However, for cases in which high-end exposure can reasonably be expected from multiple sources (e.g. frequent and widespread homeowner use in a specific geographical area), multiple high-end risks will be aggregated and presented as part of the comprehensive risk assessment/characterization. Since the toxicological endpoint considered in this assessment reflects exposure over a period of at least 7 days, an additional degree of conservatism is built into the assessment; i.e., the risk assessment nominally covers 1-7 days exposure, and the toxicological endpoint/NOEL is selected to be adequate for at least 7 days of exposure. (Toxicity results at lower levels when the dosing duration is increased.)

Intermediate-term risk results from exposure for 7 days to several months. This assessment is handled in a manner similar to the short-term risk assessment.

Chronic risk assessment describes risk which could result from several months to a lifetime of exposure. For this assessment, risks are aggregated considering average exposure from all sources for representative population

subgroups including infants and children.

B. Aggregate Exposure

In examining aggregate exposure, FFDCA section 408 requires that EPA take into account available and reliable information concerning exposure from the pesticide residue in the food in question, residues in other foods for which there are tolerances, residues in groundwater or surface water that is consumed as drinking water, and other non-occupational exposures through pesticide use in gardens, lawns, or buildings (residential and other indoor uses). Dietary exposure to residues of a pesticide in a food commodity are estimated by multiplying the average daily consumption of the food forms of that commodity by the tolerance level or the anticipated pesticide residue level. The Theoretical Maximum Residue Contribution (TMRC) is an estimate of the level of residues consumed daily if each food item contained pesticide residues equal to the tolerance. In evaluating food exposures, EPA takes into account varying consumption patterns of major identifiable subgroups of consumers, including infants and children. The TMRC is a ''worst case'' estimate since it is based on the assumptions that food contains pesticide residues at the tolerance level and that 100% of the crop is treated by pesticides that have established tolerances. If the TMRC exceeds the RfD or poses a lifetime cancer risk that is greater than approximately one in a million, EPA attempts to derive a more accurate exposure estimate for the pesticide by evaluating additional types of information (anticipated residue data and/or percent of crop treated data) which show, generally, that pesticide residues in most foods when they are eaten are well below established tolerances.

Percent of crop treated estimates are derived from federal and private market survey data. Typically, a range of estimates are supplied and the upper end of this range is assumed for the exposure assessment. By using this upper end estimate of percent of crop treated, the Agency is reasonably certain that exposure is not understated for any significant subpopulation group. Further, regional consumption information is taken into account through EPA's computer-based model for evaluating the exposure of significant subpopulations including several regional groups, to pesticide residues. For this pesticide, the most highly exposed population subgroup (non-nursing infants <1 year old) was not regionally based.

IV. Aggregate Risk Assessment and Determination of Safety

Consistent with section 408(b)(2)(D), EPA has reviewed the available scientific data and other relevant information in support of this action, EPA has sufficient data to assess the hazards of myclobutanil and to make a determination on aggregate exposure, consistent with section 408(b)(2), for time-limited tolerances for the combined residues of myclobutanil on peppers (bell and non-bell) at 1.0 ppm, peppermint and 2.5 ppm and spearmint at 2.5 ppm. EPA's assessment of the dietary exposures and risks associated with establishing the tolerance follows.

A. Toxicological Profile

EPA has evaluated the available toxicity data and considered its validity, completeness, and reliability as well as the relationship of the results of the studies to human risk. EPA has also considered available information concerning the variability of the sensitivities of major identifiable subgroups of consumers, including infants and children. The nature of the toxic effects caused by myclobutanil are discussed below.

1. *Short - and intermediate - term toxicity.* For short-term dermal MOE calculations, the Agency used the systemic NOEL of 100 mg/kg/day from a 21-day dermal toxicity study in rats. This dose was the highest tested in the study. The Agency did not identify an inhalation endpoint.

For intermediate-term MOE calculations, the Agency used the NOEL of 10 mg/kg/day from a 2-generation reproductive toxicity study in rats. At the lowest effect level (LEL) of 50 mg/kg/day, there were decreases in pup body weight, an increased incidence in the number of stillborns, and atrophy of the prostate and testes.

2. *Chronic toxicity.* EPA has established the RfD for myclobutanil at 0.025 milligrams/kilogram/day (mg/kg/day). This RfD is based on a chronic feeding study in rats using a NOEL of 2.5 mg/kg/day and an uncertainty factor of 100. At the lowest observed effect level (LOEL) of 9.9 mg/kg/day there was testicular atrophy.

3. *Carcinogenicity.* Myclobutanil has been classified as a Group E chemical (no evidence of carcinogenicity for humans) by the Agency.

B. Exposures and Risks

1. *From food and feed uses.* Tolerances have been established (40 CFR 180.443) for the combined residues of myclobutanil [alpha-butyl-alpha-(4-chlorophenyl)-1H-1,2,4-triazole-1-propanenitrile] plus its alcohol metabolite [alpha-(3-hydroxybutyl)-alpha-(4-chlorophenyl)-1H-1,2,4-triazole-1-propanenitrile] (free and bound), in or on a variety of raw agricultural commodities at levels ranging from 5.0 ppm in cherries to 0.02 ppm in eggs. A tolerance has also been established (40 CFR 180.443(b)) for the combined residues of myclobutanil plus its alcohol metabolite (free and bound) and diol metabolite [alpha-(4-chlorophenyl)-alpha-(3,4-dihydroxybutyl)-1H-1,2,4-triazole-1-propanenitrile], in milk at 0.05 ppm. Risk assessments were conducted by EPA to assess dietary exposures and risks from myclobutanil as follows:

Chronic exposure and risk. In conducting this chronic dietary risk assessment, EPA has made somewhat conservative assumptions -- with the exception of bananas, all commodities having myclobutanil tolerances will contain myclobutanil and metabolite residues and those residues will be at the level of the established tolerance -- which results in an overestimate of human dietary exposure. For bananas an anticipated residue estimate was used. Percent crop-treated estimates were utilized for selected commodities included in the assessment. Thus, in making a safety determination for this tolerance, EPA is taking into account this partially refined exposure assessment. The existing myclobutanil tolerances (published, pending, and including the necessary Section 18 tolerances) result in an Anticipated Residue Contribution (ARC) that is equivalent to the following percentages of the RfD:

Population Subgroup	ARC food (mg/kg/day)	%RfD
U.S. Population (48 states)	0.003427	14%
Nursing Infants (<1 year old)	0.006242	25%
Non-Nursing Infants (<1 year old)	0.018291	73%
Children (1-6 years old)	0.009747	39%

Population Subgroup	ARC food (mg/kg/day)	%RfD
Children (7-12 years old)	0.005505	22%
Northeast Region	0.003678	15%
Western Region	0.003999	16%
Hispanics	0.004125	17%
Non-Hispanic Others	0.003728	15%

The subgroups listed above are: (1) the U.S. population (48 states); (2) those for infants and children; and, (3) the other subgroups for which the percentage of the RfD occupied is greater than that occupied by the subgroup U.S. population (48 states).

2. *From drinking water.* Myclobutanil is persistent and not considered mobile in soils with the exception of sandy soils. Data are not available for its diol metabolite. There is no established Maximum Contaminant Level for residues of myclobutanil in drinking water. No Health Advisory Levels for myclobutanil in drinking water have been established.

Chronic exposure and risk. Because the Agency lacks sufficient water-related exposure data to complete a comprehensive drinking water risk assessment for many pesticides, EPA has commenced and nearly completed a process to identify a reasonable yet conservative bounding figure for the potential contribution of water-related exposure to the aggregate risk posed by a pesticide. In developing the bounding figure, EPA estimated residue levels in water for a number of specific pesticides using various data sources. The Agency then applied the estimated residue levels, in conjunction with appropriate toxicological endpoints (RfD's or acute dietary NOEL's) and assumptions about body weight and consumption, to calculate, for each pesticide, the increment of aggregate risk contributed by consumption of contaminated water. While EPA has not yet pinpointed the appropriate bounding figure for exposure from contaminated water, the ranges the Agency is continuing to examine are all below the level that would cause myclobutanil to exceed the RfD if the tolerance being considered in this document were granted. The Agency has therefore concluded that the potential exposures associated with myclobutanil in water, even at the higher levels the Agency is considering as a conservative upper bound, would not prevent the Agency from determining that there is a reasonable certainty of no harm if the tolerance is granted.

3. *From non-dietary exposure.* Myclobutanil is currently registered for use on the following residential non-food sites: outdoor residential and greenhouse use on annuals and perennials, turf, shrubs, trees, flowers. These uses do not constitute a chronic exposure scenario, but may constitute a short- to intermediate-term exposure scenario. However, EPA lacks sufficient residential-related exposure data to complete a comprehensive residential risk assessment for many pesticides, including myclobutanil.

4. *Cumulative exposure to substances with common mechanism of toxicity.* Section 408(b)(2)(D)(v) requires that, when considering whether to establish, modify, or revoke a tolerance, the Agency consider ''available information'' concerning the cumulative effects of a particular pesticide's residues and ''other substances that have a common mechanism of toxicity.'' The Agency believes that ''available information'' in this context might include not only toxicity, chemistry, and exposure data, but also scientific policies and methodologies for understanding common mechanisms of toxicity and conducting cumulative risk assessments. For most pesticides, although the Agency has some information in its files that may turn out to be helpful in eventually determining whether a pesticide shares a common mechanism of toxicity with any other substances, EPA does not at this time have the methodologies to resolve the complex scientific issues concerning common mechanism of toxicity in a meaningful way. EPA has begun a pilot process to study this issue further through the examination of particular classes of pesticides. The Agency hopes that the results of this pilot process will increase the Agency's scientific understanding of this question such that EPA will be able to develop and apply scientific principles for better determining which chemicals have a common mechanism of toxicity and evaluating the cumulative effects of such chemicals. The Agency anticipates, however, that even as its understanding of the science of common mechanisms increases, decisions on specific classes of chemicals will be heavily dependent on chemical specific data, much of which may not be presently available.

Although at present the Agency does not know how to apply the information in its files concerning common mechanism issues to most risk assessments, there are pesticides as to which the common mechanism issues can be resolved. These pesticides include pesticides that are toxicologically dissimilar to existing chemical substances (in which case the Agency can conclude that it is unlikely that a pesticide shares a common mechanism of activity with other substances) and pesticides that produce a common toxic metabolite (in which case common mechanism of activity will be assumed).

EPA does not have, at this time, available data to determine whether myclobutanil has a common mechanism of toxicity with other substances or how to include this pesticide in a cumulative risk assessment. Unlike other pesticides for which EPA has followed a cumulative risk approach based on a common mechanism of toxicity, myclobutanil does not appear to produce a toxic metabolite produced by other substances. For the purposes of this tolerance action, therefore, EPA has not assumed that myclobutanil has a common mechanism of toxicity with other substances.

C. Aggregate Risks and Determination of Safety for U.S. Population

1. *Chronic risk.* Using the partially refined exposure assumptions described under unit IV.B.1. ''Chronic Exposure and Risk'' and taking into account the completeness and reliability of the toxicity data, EPA has concluded that aggregate dietary exposure (food only) to myclobutanil will utilize 14% of the RfD for the U.S. population. EPA generally has no concern for exposures below 100% of the RfD because the RfD represents the level at or below which daily aggregate dietary exposure over a lifetime will not pose appreciable risks to human health. EPA has determined that the outdoor registered uses of myclobutanil would not fall under a chronic exposure scenario. Despite the potential for exposure to myclobutanil in drinking water, using best scientific judgement EPA does not expect the aggregate exposure of food and water to

exceed 100% of the RfD. The Agency concludes that there is a reasonable certainty that no harm will result from aggregate chronic exposure to myclobutanil residues.

2. *Short- and intermediate-term risk.* Short- and intermediate-term aggregate exposure takes into account chronic dietary food and water (considered to be a background exposure level) plus indoor and outdoor residential exposure. Although short-term exposure scenarios may be present, based on the lack of acute toxicological endpoints and the low percent of RfD occupied, in the best scientific judgement of the Agency, aggregate short- and intermediate-term risk will not exceed EPA's level of concern. Additionally, the Agency notes that there are no indoor residential uses of myclobutanil, thus indoor residential exposure is expected to be minimal.

D. Aggregate Cancer Risk for U.S. Population

Myclobutanil was classified by the Agency as a Group E chemical (no evidence of carcinogenicity for humans). Thus, a cancer risk assessment was not conducted.

E. Aggregate Risks and Determination of Safety for Infants and Children

1. *Safety factor for infants and children.* — a. *In general.* In assessing the potential for additional sensitivity of infants and children to residues of myclobutanil, EPA considered data from developmental toxicity studies in the rat and rabbit and a two-generation reproduction study in the rat. The developmental toxicity studies are designed to evaluate adverse effects on the developing organism resulting from pesticide exposure during prenatal development to one or both parents. Reproduction studies provide information relating to effects from exposure to the pesticide on the reproductive capability of mating animals and data on systemic toxicity.

FFDCA section 408 provides that EPA shall apply an additional tenfold margin of safety for infants and children in the case of threshold effects to account for pre-and post-natal toxicity and the completeness of the database unless EPA determines that a different margin of safety will be safe for infants and children. Margins of safety are incorporated into EPA risk assessments either directly through use of a MOE analysis or through using uncertainty (safety) factors in calculating a dose level that poses no appreciable risk to humans. EPA believes that reliable data support using the standard MOE and uncertainty factor (usually 100 for combined inter- and intra-species variability) and not the additional tenfold MOE/uncertainty factor when EPA has a complete data base under existing guidelines and when the severity of the effect in infants or children or the potency or unusual toxic properties of a compound do not raise concerns regarding the adequacy of the standard MOE/safety factor.

b. *Developmental toxicity studies.* In the developmental study in rats, the maternal (systemic) NOEL was 93.8 mg/kg/day, based on rough hair coat, and salivation at the LOEL of 312.6 mg/kg/day. The developmental (fetal) NOEL was 93.8 mg/kg/day based on incidences of 14th rudimentary and 7th cervical ribs at the LOEL of 312.6 mg/kg/day.

In the developmental toxicity study in rabbits, the maternal (systemic) NOEL was 60 mg/kg/day, based on reduced weight gain, clinical signs of toxicity and abortions at the LOEL of 200 mg/kg/day. The developmental (fetal) NOEL was 60 mg/kg/day, based on increases in number of resorptions, decreases in litter size, and a decrease in the viability index at the LOEL of 200 mg/kg/day.

c. *Reproductive toxicity study.* In the 2-generation reproductive toxicity study in rats, the parental (systemic) NOEL was 2.5 mg/kg/day, based on increased liver weights and liver cell hypertrophy at the LOEL of 10 mg/kg/day. The developmental (pup) NOEL was 10 mg/kg/day, based on decreased pup body weight during lactation at the LOEL of 50 mg/kg/day. The reproductive (pup) NOEL was 10 mg/kg/day, based on the increased incidence of stillborns, and atrophy of the testes, epididymides, and prostate at the LEL of 50 mg/kg/day.

d. *Pre- and post-natal sensitivity.* The pre- and post-natal toxicology data base for myclobutanil is complete with respect to current toxicological data requirements. Based on the developmental and reproductive toxicity studies discussed above, for myclobutanil there does not appear to be an extra sensitivity for pre- or post-natal effects.

e. *Conclusion.* Based on the above, EPA concludes that reliable data support use of the standard 100-fold uncertainty factor and that a factor is not needed to protect the safety of infants and children.

2. *Chronic risk.* Using the conservative exposure assumptions described above, EPA has concluded that aggregate exposure to myclobutanil from food ranges from 22% of the RfD for children (7 to 12 years old), up to 73% for non-nursing infants (<1 year old). EPA generally has no concern for exposures below 100% of the RfD because the RfD represents the level at or below which daily aggregate dietary exposure over a lifetime will not pose appreciable risks to human health. Despite the potential for exposure to myclobutanil in drinking water and from non-dietary, non-occupational exposure, EPA does not expect the aggregate exposure to exceed 100% of the RfD. EPA concludes that there is a reasonable certainty that no harm will result to infants and children from aggregate exposure to myclobutanil residues.

V. Other Considerations

A. Metabolism In Plants and Animals

The nature of the residue in plants is adequately understood. The residue of concern is myclobutanil plus its alcohol metabolite (free and bound), as specified in 40 CFR 180.443(a).

B. Analytical Enforcement Methodology

An adequate enforcement method is available to enforce the established tolerances. Quantitation is by GLC using a Nitrogen/Phosphorus detector for myclobutanil and an Electron Capture detector (Ni_{63}) for residues measured as the alcohol metabolite.

C. Magnitude of Residues

Residues of myclobutanil and its alcohol metabolite are not expected to exceed 1.0 ppm in/on peppers (bell and non-bell), 2.5 ppm in/on peppermint or 2.5 ppm in/on spearmint as a result of this section 18 use. Secondary residues are not expected in animal commodities as no feedstuffs are associated with these Section 18 uses. Meat/milk/poultry/egg tolerances have been established as a result of other myclobutanil uses.

D. International Residue Limits

There are no Codex, Canadian or Mexican residue limits established for myclobutanil and its metabolites on the commodities included in these Section 18 requests. Thus, harmonization is not an issue for these Section 18 actions.

E. Rotational Crop Restrictions

Information concerning the likelihood of residues in rotational crops is not available for myclobutanil. As mint and pepper (bell and non-bell) fields are normally rotated, the Agency concludes the following restriction should be added to the label for the requested Section 18: Rally treated fields can be rotated at any time to crops which are included on the Rally label. All other crops may be planted 1 year following applications of Rally Agricultural Fungicide.

VI. Conclusion

Therefore, the tolerance is established for combined residues of myclobutanil in bell and non-bell peppers at 1.0 ppm, peppermint at 2.5 ppm and spearmint at 2.5 ppm.

VII. Objections and Hearing Requests

The new FFDCA section 408(g) provides essentially the same process for persons to ''object'' to a tolerance regulation issued by EPA under new section 408(e) and (l)(6) as was provided in the old section 408 and in section 409. However, the period for filing objections is 60 days, rather than 30 days. EPA currently has procedural regulations which govern the submission of objections and hearing requests. These regulations will require some modification to reflect the new law. However, until those modifications can be made, EPA will continue to use those procedural regulations with appropriate adjustments to reflect the new law.

Any person may, by September 8, 1997 file written objections to any aspect of this regulation and may also request a hearing on those objections. Objections and hearing requests must be filed with the Hearing Clerk, at the address given above (40 CFR 178.20). A copy of the objections and/or hearing requests filed with the Hearing Clerk should be submitted to the OPP docket for this rulemaking. The objections submitted must specify the provisions of the regulation deemed objectionable and the grounds for the objections (40 CFR 178.25). Each objection must be accompanied by the fee prescribed by 40 CFR 180.33(i). If a hearing is requested, the objections must include a statement of the factual issues on which a hearing is requested, the requestor's contentions on such issues, and a summary of any evidence relied upon by the requestor (40 CFR 178.27). A request for a hearing will be granted if the Administrator determines that the material submitted shows the following: There is genuine and substantial issue of fact; there is a reasonable possibility that available evidence identified by the requestor would, if established, resolve one or more of such issues in favor of the requestor, taking into account uncontested claims or facts to the contrary; and resolution of the factual issues in the manner sought by the requestor would be adequate to justify the action requested (40 CFR 178.32). Information submitted in connection with an objection or hearing request may be claimed confidential by marking any part or all of that information as Confidential Business Information (CBI). Information so marked will not be disclosed except in accordance with procedures set forth in 40 CFR part 2. A copy of the information that does not contain CBI must be submitted for inclusion in the public record. Information not marked confidential may be disclosed publicly by EPA without prior notice.

VIII. Public Docket

EPA has established a record for this rulemaking under docket control number [OPP–300510] (including any comments and data submitted electronically). A public version of this record, including printed, paper versions of electronic comments, which does not include any information claimed as CBI, is available for inspection from 8:30 a.m. to 4 p.m., Monday through Friday, excluding legal holidays. The public record is located in Room 1132 of the Public Information and Records Integrity Branch, Information Resources and Services Division (7506C), Office of Pesticide Programs, Environmental Protection Agency, Crystal Mall #2, 1921 Jefferson Davis Highway, Arlington, VA.

Electronic comments may be sent directly to EPA at:

opp-docket@epamail.epa.gov.

Electronic comments must be submitted as an ASCII file avoiding the use of special characters and any form of encryption.

The official record for this rulemaking, as well as the public version, as described above will be kept in paper form. Accordingly, EPA will transfer any copies of objections and hearing requests received electronically into printed, paper form as they are received and will place the paper copies in the official rulemaking record which will also include all comments submitted directly in writing. The official rulemaking record is the paper record maintained at the Virginia address in ''ADDRESSES'' at the beginning of this document.

IX. Regulatory Assessment Requirements

This final rule establishes tolerances under FFDCA section 408(d) in response to a petition submitted to the Agency. The Office of Management and Budget (OMB) has exempted these types of actions from review under Executive Order 12866, entitled Regulatory Planning and Review (58 FR 51735, October 4, 1993). This final rule does not contain any information collections subject to OMB approval under the Paperwork Reduction Act (PRA), 44 U.S.C. 3501 *et seq.*, or impose any enforceable duty or contain any unfunded mandate as described under Title II of the Unfunded Mandates Reform Act of 1995 (UMRA) (Pub. L. 104-4). Nor does it require any prior consultation as specified by Executive Order 12875, entitled Enhancing the Intergovernmental Partnership (58 FR 58093, October 28, 1993), or special considerations as required by Executive Order 12898, entitled Federal Actions to Address Environmental Justice in Minority Populations and Low-Income Populations (59 FR 7629, February 16, 1994), or require OMB review in accordance with Executive Order 13045, entitled Protection of Children from Environmental Health Risks and Safety Risks (62 FR 19885, April 23, 1997).

In addition, since these tolerances and exemptions that are established on the basis of a petition under FFDCA section 408 (d), such as the tolerances in this final rule, do not require the issuance of a proposed rule, the requirements of the Regulatory Flexibility Act (RFA) (5 U.S.C. 601 *et seq.*) do not apply. Nevertheless, the Agency has previously assessed whether establishing tolerances, exemptions from tolerances, raising tolerance levels or expanding exemptions might adversely impact small entities and concluded, as a generic matter, that there is no adverse economic impact. The factual basis for the Agency's generic certification for tolerance actions published on May 4, 1981 (46 FR 24950), and was provided to the Chief Counsel for Advocacy of the Small Business Administration.

X. Submission to Congress and the General Accounting Office

Under 5 U.S.C. 801(a)(1)(A), as added by the Small Business Regulatory Enforcement Fairness Act of 1996, the Agency has submitted a report containing this rule and other required information to the U.S. Senate, the U.S. House of Representatives, and the Comptroller General of the General Accounting Office prior to publication of this rule in today's **Federal Register**. This is not a ''major rule'' as defined by 5 U.S.C. 804(2).

List of Subjects in 40 CFR Part 180

Environmental protection, Administrative practice and procedure, Agricultural commodities, Pesticides and pests, Reporting and recordkeeping requirements.

Dated: June 26, 1997.

James Jones,

Acting Director, Registration Division, Office of Pesticide Programs.

Therefore, 40 CFR Chapter I is amended as follows:

PART 180 [AMENDED]

1. The authority citation for part 180 continues to read as follows:

Authority : 21 U.S.C. 346a and 371.

2. In § 180.443, in paragraph (b), by revising the introductory text and alphabetically adding the following commodities to the table to read as follows:

§ 180.443 Myclobutanil; tolerances for residues.

* * * * *

(b) *Section 18 emergency exemptions.* Time-limited tolerances are established for residues of the fungicide myclobutanil in connection with use of the pesticide under section 18 emergency exemptions granted by EPA. These tolerances will expire and are revoked on the dates specified in the following table.

Commodity	Parts per million	Expiration/Revocation Date
* * *	* *	* *
Peppermint	2.5	July 1, 1998
Peppers (bell and non-bell)	1.0	July 1, 1998
Spearmint	2.5	July 1, 1998

* * * * *

[FR Doc. 97–17589 Filed 7–8–97; 8:45 am]

BILLING CODE 6560–50–F

ENVIRONMENTAL PROTECTION AGENCY

40 CFR Part 180

[OPP–300512; FRL–5729–5]

RIN 2070–AB78

Fomesafen; Pesticide Tolerances for Emergency Exemptions

AGENCY: Environmental Protection Agency (EPA).

ACTION: Final rule.

SUMMARY: This regulation establishes a time-limited tolerance for residues of fomesafen in or on snap beans . This action is in response to EPA's granting of an emergency exemption under section 18 of the Federal Insecticide, Fungicide, and Rodenticide Act authorizing use of the pesticide on snap beans. This regulation establishes a maximum permissible level for residues of fomesafen in this food commodity pursuant to section 408(l)(6) of the Federal Food, Drug, and Cosmetic Act, as amended by the Food Quality Protection Act of 1996. The tolerance will expire and is revoked on June 30, 1998.

DATES: This regulation is effective July 9, 1997. Objections and requests for hearings must be received by EPA on or before September 8, 1997.

ADDRESSES: Written objections and hearing requests, identified by the docket control number, [OPP–300512], must be submitted to: Hearing Clerk (1900), Environmental Protection Agency, Rm. M3708, 401 M St., SW., Washington, DC 20460. Fees accompanying objections and hearing requests shall be labeled ''Tolerance Petition Fees'' and forwarded to: EPA Headquarters Accounting Operations Branch, OPP (Tolerance Fees), P.O. Box 360277M, Pittsburgh, PA 15251. A copy of any objections and hearing requests filed with the Hearing Clerk identified by the docket control number, [OPP–300512], must also be submitted to: Public Information and Records Integrity Branch, Information Resources and Services Division (7506C), Office of Pesticide Programs, Environmental Protection Agency, 401 M St., SW., Washington, DC 20460. In person, bring a copy of objections and hearing requests to Rm. 1132, CM #2, 1921 Jefferson Davis Hwy., Arlington, VA.

A copy of objections and hearing requests filed with the Hearing Clerk may also be submitted electronically by sending electronic mail (e-mail) to: opp-docket@epamail.epa.gov. Copies of objections and hearing requests must be submitted as an ASCII file avoiding the use of special characters and any form of encryption. Copies of objections and hearing requests will also be accepted on disks in WordPerfect 5.1 file format or ASCII file format. All copies of objections and hearing requests in electronic form must be identified by the docket control number [OPP–300512]. No Confidential Business Information (CBI) should be submitted through e-mail. Electronic copies of objections and hearing requests on this rule may be filed online at many Federal Depository Libraries.

FOR FURTHER INFORMATION CONTACT: By mail: Andrea Beard, Registration Division 7505C, Office of Pesticide Programs, Environmental Protection Agency, 401 M St., SW., Washington, DC 20460. Office location, telephone number, and e-mail address: Crystal Mall #2, 1921 Jefferson Davis Hwy., Arlington, VA, (703) 308-9356, e-mail: beard.andrea@epamail.epa.gov.

SUPPLEMENTARY INFORMATION: EPA, on its own initiative, pursuant to section 408(e) and (l)(6) of the Federal Food, Drug, and Cosmetic Act (FFDCA), 21 U.S.C. 346a(e) and (l)(6), is establishing a tolerance for residues of the herbicide fomesafen, in or on snap beans at 0.05 part per million (ppm). This tolerance will expire and is revoked on June 30, 1998. EPA will publish a document in the **Federal Register** to remove the revoked tolerance from the Code of Federal Regulations.

I. Background and Statutory Authority

The Food Quality Protection Act of 1996 (FQPA) (Pub. L. 104–170) was signed into law August 3, 1996. FQPA amends both the Federal Food, Drug, and Cosmetic Act (FFDCA), 21 U.S.C. 301 *et seq.*, and the Federal Insecticide, Fungicide, and Rodenticide Act (FIFRA), 7 U.S.C. 136 *et seq.* The FQPA amendments went into effect immediately. Among other things, FQPA amends FFDCA to bring all EPA pesticide tolerance-setting activities under a new section 408 with a new safety standard and new procedures. These activities are described below and discussed in greater detail in the final rule establishing the time-limited tolerance associated with the emergency exemption for use of propiconazole on sorghum (61 FR 58135, November 13, 1996)(FRL–5572–9).

New section 408(b)(2)(A)(i) of the FFDCA allows EPA to establish a tolerance (the legal limit for a pesticide chemical residue in or on a food) only if EPA determines that the tolerance is ''safe.'' Section 408(b)(2)(A)(ii) defines ''safe'' to mean that ''there is a reasonable certainty that no harm will result from aggregate exposure to the pesticide chemical residue, including all anticipated dietary exposures and all other exposures for which there is reliable information.'' This includes

exposure through drinking water and in residential settings, but does not include occupational exposure. Section 408(b)(2)(C) requires EPA to give special consideration to exposure of infants and children to the pesticide chemical residue in establishing a tolerance and to ''ensure that there is a reasonable certainty that no harm will result to infants and children from aggregate exposure to the pesticide chemical residue. . . .''

Section 18 of FIFRA authorizes EPA to exempt any Federal or State agency from any provision of FIFRA, if EPA determines that ''emergency conditions exist which require such exemption.'' This provision was not amended by FQPA. EPA has established regulations governing such emergency exemptions in 40 CFR part 166.

Section 408(l)(6) of the FFDCA requires EPA to establish a time-limited tolerance or exemption from the requirement for a tolerance for pesticide chemical residues in food that will result from the use of a pesticide under an emergency exemption granted by EPA under section 18 of FIFRA. Such tolerances can be established without providing notice or period for public comment.

Because decisions on section 18-related tolerances must proceed before EPA reaches closure on several policy issues relating to interpretation and implementation of the FQPA, EPA does not intend for its actions on such tolerance to set binding precedents for the application of section 408 and the new safety standard to other tolerances and exemptions.

II. Emergency Exemption for Fomesafen on Snap Beans and FFDCA Tolerances

Requests were received from a number of states for use of fomesafen on snap beans for control of broadleaf weeds. The Applicants state that since the loss of the herbicides dinoseb and chloramben, weed contamination in U.S. bean fields has increased and significant crop losses have occurred. The Applicants state that available alternative pesticides and control techniques have produced unreliable results, and that without this use of fomesafen, significant economic losses will occur. EPA has authorized under FIFRA section 18 the use of fomesafen on snap beans for control of broadleaf weeds in Arkansas, Maryland, New York, Oklahoma, Pennsylvania, and Virginia. After having reviewed the submission, EPA concurs that emergency conditions exist for this state.

As part of its assessment of this emergency exemption, EPA assessed the potential risks presented by residues of fomesafen in or on snap beans. In doing so, EPA considered the new safety standard in FFDCA section 408(b)(2), and EPA decided that the necessary tolerance under FFDCA section 408(l)(6) would be consistent with the new safety standard and with FIFRA section 18. Consistent with the need to move quickly on the emergency exemption in order to address an urgent non-routine situation and to ensure that the resulting food is safe and lawful, EPA is issuing this tolerance without notice and opportunity for public comment under section 408(e), as provided in section 408(l)(6). Although this tolerance will expire and is revoked on June 30, 1998, under FFDCA section 408(l)(5), residues of the pesticide not in excess of the amounts specified in the tolerance remaining in or on snap beans after that date will not be unlawful, provided the pesticide is applied in a manner that was lawful under FIFRA. EPA will take action to revoke this tolerance earlier if any experience with, scientific data on, or other relevant information on this pesticide indicate that the residues are not safe.

Because this tolerance is being approved under emergency conditions EPA has not made any decisions about whether fomesafen meets EPA's registration requirements for use on snap beans or whether a permanent tolerance for this use would be appropriate. Under these circumstances, EPA does not believe that this tolerance serves as a basis for registration of fomesafen by a State for special local needs under FIFRA section 24(c). Nor does this tolerance serve as the basis for any State other than Arkansas, Maryland, New York, Oklahoma, Pennsylvania, and Virginia to use this pesticide on this crop under section 18 of FIFRA without following all provisions of section 18 as identified in 40 CFR part 166. For additional information regarding the emergency exemption for fomesafen, contact the Agency's Registration Division at the address provided above.

III. Risk Assessment and Statutory Findings

EPA performs a number of analyses to determine the risks from aggregate exposure to pesticide residues. First, EPA determines the toxicity of pesticides based primarily on toxicological studies using laboratory animals. These studies address many adverse health effects, including (but not limited to) reproductive effects, developmental toxicity, toxicity to the nervous system, and carcinogenicity. Second, EPA examines exposure to the pesticide through the diet (e.g., food and drinking water) and through exposures that occur as a result of pesticide use in residential settings.

A. Toxicity

1. *Threshold and non-threshold effects.* For many animal studies, a dose response relationship can be determined, which provides a dose that causes adverse effects (threshold effects) and doses causing no observed effects (the ''no-observed effect level'' or ''NOEL'').

Once a study has been evaluated and the observed effects have been determined to be threshold effects, EPA generally divides the NOEL from the study with the lowest NOEL by an uncertainty factor (usually 100 or more) to determine the Reference Dose (RfD). The RfD is a level at or below which daily aggregate exposure over a lifetime will not pose appreciable risks to human health. An uncertainty factor (sometimes called a ''safety factor'') of 100 is commonly used since it is assumed that people may be up to 10 times more sensitive to pesticides than the test animals, and that one person or subgroup of the population (such as infants and children) could be up to 10 times more sensitive to a pesticide than another. In addition, EPA assesses the potential risks to infants and children based on the weight of the evidence of the toxicology studies and determines whether an additional uncertainty factor is warranted. Thus, an aggregate daily exposure to a pesticide residue at or below the RfD (expressed as 100% or less of the RfD) is generally considered acceptable by EPA. EPA generally uses the RfD to evaluate the chronic risks posed by pesticide exposure. For shorter term risks, EPA calculates a margin of exposure (MOE) by dividing the estimated human exposure into the NOEL from the appropriate animal study. Commonly, EPA finds MOEs lower than 100 to be unacceptable. This 100-fold MOE is based on the same rationale as the 100-fold uncertainty factor.

Lifetime feeding studies in two species of laboratory animals are conducted to screen pesticides for cancer effects. When evidence of increased cancer is noted in these studies, the Agency conducts a weight of the evidence review of all relevant toxicological data including short-term and mutagenicity studies and structure activity relationship. Once a pesticide has been classified as a potential human carcinogen, different types of risk assessments (e.g., linear low dose extrapolations or MOE calculation based on the appropriate NOEL) will be

carried out based on the nature of the carcinogenic response and the Agency's knowledge of its mode of action.

2. *Differences in toxic effect due to exposure duration.* The toxicological effects of a pesticide can vary with different exposure durations. EPA considers the entire toxicity data base, and based on the effects seen for different durations and routes of exposure, determines which risk assessments should be done to assure that the public is adequately protected from any pesticide exposure scenario. Both short and long durations of exposure are always considered. Typically, risk assessments include ''acute'', ''short-term'', ''intermediate term'', and ''chronic'' risks. These assessments are defined by the Agency as follows.

Acute risk, by the Agency's definition, results from 1-day consumption of food and water, and reflects toxicity which could be expressed following a single oral exposure to the pesticide residues. High-end exposure to food and water residues are typically assumed.

Short-term risk results from exposure to the pesticide for a period of 1-7 days, and therefore overlaps with the acute risk assessment. Historically, this risk assessment was intended to address primarily dermal and inhalation exposure which could result, for example, from residential pesticide applications. However, since enaction of FQPA, this assessment has been expanded to include both dietary and non-dietary sources of exposure, and will typically consider exposure from food, water, and residential uses when reliable data are available. In this assessment, risks from average food and water exposure, and high-end residential exposure, are aggregated. High-end exposures from all 3 sources are not typically added because of the very low probability of this occurring in most cases, and because the other conservative assumptions built into the assessment assure adequate protection of public health. However, for cases in which high-end exposure can reasonably be expected from multiple sources (e.g. frequent and widespread homeowner use in a specific geographical area), multiple high-end risks will be aggregated and presented as part of the comprehensive risk assessment/characterization. Since the toxicological endpoint considered in this assessment reflects exposure over a period of at least 7 days, an additional degree of conservatism is built into the assessment; i.e., the risk assessment nominally covers 1-7 days exposure, and the toxicological endpoint/NOEL is selected to be adequate for at least 7 days of exposure. (Toxicity results at lower levels when the dosing duration is increased.)

Intermediate-term risk results from exposure for 7 days to several months. This assessment is handled in a manner similar to the short-term risk assessment.

Chronic risk assessment describes risk which could result from several months to a lifetime of exposure. For this assessment, risks are aggregated considering average exposure from all sources for representative population subgroups including infants and children.

B. Aggregate Exposure

In examining aggregate exposure, FFDCA section 408 requires that EPA take into account available and reliable information concerning exposure from the pesticide residue in the food in question, residues in other foods for which there are tolerances, residues in groundwater or surface water that is consumed as drinking water, and other non-occupational exposures through pesticide use in gardens, lawns, or buildings (residential and other indoor uses). Dietary exposure to residues of a pesticide in a food commodity are estimated by multiplying the average daily consumption of the food forms of that commodity by the tolerance level or the anticipated pesticide residue level. The Theoretical Maximum Residue Contribution (TMRC) is an estimate of the level of residues consumed daily if each food item contained pesticide residues equal to the tolerance. In evaluating food exposures, EPA takes into account varying consumption patterns of major identifiable subgroups of consumers, including infants and children.The TMRC is a ''worst case'' estimate since it is based on the assumptions that food contains pesticide residues at the tolerance level and that 100% of the crop is treated by pesticides that have established tolerances. If the TMRC exceeds the RfD or poses a lifetime cancer risk that is greater than approximately one in a million, EPA attempts to derive a more accurate exposure estimate for the pesticide by evaluating additional types of information (anticipated residue data and/or percent of crop treated data) which show, generally, that pesticide residues in most foods when they are eaten are well below established tolerances.

Percent of crop treated estimates are derived from federal and private market survey data. Typically, a range of estimates are supplied and the upper end of this range is assumed for the exposure assessment. By using this upper end estimate of percent of crop treated, the Agency is reasonably certain that exposure is not understated for any significant subpopulation group. Further, regional consumption information is taken into account through EPA's computer-based model for evaluating the exposure of significant subpopulations including several regional groups, to pesticide residues. For this pesticide, the most highly exposed population subgroup (non-nursing infants <1 year old) was not regionally based.

IV. Aggregate Risk Assessment and Determination of Safety

Consistent with section 408(b)(2)(D), EPA has reviewed the available scientific data and other relevant information in support of this action, EPA has sufficient data to assess the hazards of fomesafen and to make a determination on aggregate exposure, consistent with section 408(b)(2), for a time-limited tolerance for residues of fomesafen on snap beans at 0.05 ppm. EPA's assessment of the dietary exposures and risks associated with establishing the tolerance follows.

A. Toxicological Profile

EPA has evaluated the available toxicity data and considered its validity, completeness, and reliability as well as the relationship of the results of the studies to human risk. EPA has also considered available information concerning the variability of the sensitivities of major identifiable subgroups of consumers, including infants and children. The nature of the toxic effects caused by fomesafen are discussed below.

1. *Acute toxicity.* EPA has selected the developmental NOEL of 7.5 mg/kg/day from the oral rat developmental toxicity study for the acute dietary endpoint; at the lowest observed effect level (LOEL) of 50 mg/kg/day, fetuses had delayed or partial ossification and extra ribs. The population subgroup of concern is females 13+ years of age.

2. *Short - and intermediate - term toxicity.* EPA has selected the NOEL of 10 mg/kg/day from the oral rabbit developmental toxicity study for calculation of short-term MOE's. At the lowest effect level (LEL) of 40 mg/kg/day, maternal toxicity included stomach mucosal erosion and death.

3. *Chronic toxicity.* EPA has not established the RfD for fomesafen. For the purposes of this tolerance, based upon available chronic toxicity data, the RfD of 0.0025 mg/kg/day was used. This RfD is based on the NOEL of 0.25 mg/kg/day from the rat carcinogenicity study. A 100-fold uncertainty factor was

used to calculate this RfD. At the LOEL of 5.0 mg/kg/day there was liver toxicity and decreased body weight.

4. *Carcinogenicity*. Fomesafen is classified as a Group C carcinogen with a Q* of 1.9 X 10^{-1} $(mg/kg/day)^{-1}$. This classification was based on: (a)increases in both adenomas and carcinomas at several dose levels in both sexes of mice; (b) some evidence of reduced latency for the time of tumor appearance; (c) limited evidence of mutagenic effects; and, (d) the structural similarity of fomesafen to other biphenyl ether herbicides which have been shown to be carcinogenic.

B. Exposures and Risks

1. *From food and feed uses. A* tolerance has been established (40 CFR 180.433) for the residues of fomesafen, in or on soybeans at 0.05 ppm. Risk assessments were conducted by EPA to assess dietary exposures and risks from fomesafen as follows:

i. *Acute exposure and risk*. Acute dietary risk assessments are performed for a food-use pesticide if a toxicological study has indicated the possibility of an effect of concern occurring as a result of a one day or single exposure. The acute dietary risk assessment used tolerance level residue values and assumed 100% of crop treated. The resulting high-end exposure estimate of 0.0002 mg/kg/day results in a dietary MOE of 37,500 for the population subgroup of concern, females 13+ years old. This MOE is a conservative risk assessment; refinement using anticipated residue values and percent crop treated data in conjunction with Monte Carlo analysis would result in a lower acute dietary exposure estimate.

ii. *Chronic exposure and risk*. The existing tolerance for soybeans and this time-limited tolerance for snap beans result in an ARC that is equivalent to the following percentages of the RfD: U.S. Population, 0.04%; Non-nursing Infants (<1 year old), 1.4%; Children (1-6 years old), 0.7%; Nursing Infants, 0.5%; and Children (7-12 years old), 0.5%. The dietary risk assessments used tolerance level residues, but incorporated percent of crop treated information for soybeans and snap beans. Additional refinement using anticipated residue values would result in lower dietary exposure estimates.

iii. *Cancer risk*. A dietary (food only) cancer risk assessment using anticipated residues and percent crop treated information was performed for the U.S. population. The total calculated food cancer risk is 9 X 10^{-7}. This is an overestimate, as not all of the snap bean crop in the eastern U.S. will be treated with fomesafen.

2. *From drinking water*. Fomesafen was not included in EPA's National Survey of Pesticides in Drinking Water Wells. There are no entries for fomesafen in the Pesticides in Ground Water Database. The Agency has not extablished Maximum Contaminant Levels or Health Advisory Levels for residues of fomesafen in drinking water.

Based on available data, EPA concludes that fomesafen could leach to ground water and may reach levels of 1.0 microgram (ug)/Liter (L). The level of 1.0 ug/L was based on a small scale prospective groundwater monitoring study conducted on soybeans at a vulnerable site in North Carolina. Fomesafen residues were detected in ground water (in 4 of 9 wells) sampled between 17 and 33 months after application. Fomesafen concentrations measured 1.0 ug/L (equal to the limit of determination of the analytical method).

Exposures and risks to residues of fomesafen in drinking water were calculated, as follows:

Adult exposure = (chemical concentration in ug/L) X (10^{-3}mg/ug) X (2 L/day consumed) divided by (70 kg body weight).

Child exposure = (chemical concentration in ug/L) X (10^{-3} mg/ug) X (1 L/day consumed) divided by (10 kg body weight)

Adult exposure is thus calculated to be 2.9 X 10^{-5} mg/kg/day and exposure to children is calculated to be 1.0 X 10^{-4} mg/kg/day.

i. *Acute exposure and risk*. For the population subgroup of concern for acute exposure (females 13+), the MOE is calculated at 260,000.

ii. *Chronic exposure and risk*. Exposure to residues of fomesafen in water utilizes 1.2% of the RfD for adults and 4.0% of the RfD for children.

iii. *Cancer risk*. Based on exposure levels for drinking water, as given above, the estimate of cancer risk is 2.7 X 10^{-6}. This figure is an overestimate, as it was arrived at based on several very conservative assumptions. Estimates used were calculated based on data from only one small scale study conducted in NC, for use of fomesafen on soybeans at a vulnerable site. This represents a worst case scenario, so is not representative of the ''average'' conditions of use. Additionally, there is language on the product label warning of the potential of fomesafen to leach to ground water in vulnerable areas. Vulnerable areas in this case refers to areas where soils are permeable (sand and silt loams) and the water table is shallow. The majority of areas of soybean production, and potential use of fomesafen, will not likely be vulnerable sites, thus the data used from the one small scale study greatly overestimates levels which could actually occur. Further, it is assumed that this exaggerated level will occur in all drinking water throughout the US, and that each individual consumes 2 liters of drinking water per day.

3. *From non-dietary exposure*. Fomesafen is not currently registered for use on sites that would be expected to result in non-dietary(residential) exposure. A non-dietary risk assessment is thus not appropriate for existing uses of fomesafen.

4. *Cumulative exposure to substances with common mechanism of toxicity*. Section 408(b)(2)(D)(v) requires that, when considering whether to establish, modify, or revoke a tolerance, the Agency consider ''available information'' concerning the cumulative effects of a particular pesticide's residues and ''other substances that have a common mechanism of toxicity.'' The Agency believes that ''available information'' in this context might include not only toxicity, chemistry, and exposure data, but also scientific policies and methodologies for understanding common mechanisms of toxicity and conducting cumulative risk assessments. For most pesticides, although the Agency has some information in its files that may turn out to be helpful in eventually determining whether a pesticide shares a common mechanism of toxicity with any other substances, EPA does not at this time have the methodologies to resolve the complex scientific issues concerning common mechanism of toxicity in a meaningful way. EPA has begun a pilot process to study this issue further through the examination of particular classes of pesticides. The Agency hopes that the results of this pilot process will increase the Agency's scientific understanding of this question such that EPA will be able to develop and apply scientific principles for better determining which chemicals have a common mechanism of toxicity and evaluating the cumulative effects of such chemicals. The Agency anticipates, however, that even as its understanding of the science of common mechanisms increases, decisions on specific classes of chemicals will be heavily dependent on chemical specific data, much of which may not be presently available.

Although at present the Agency does not know how to apply the information in its files concerning common mechanism issues to most risk assessments, there are pesticides as to which the common mechanism issues can be resolved. These pesticides include pesticides that are toxicologically dissimilar to existing

chemical substances (in which case the Agency can conclude that it is unlikely that a pesticide shares a common mechanism of activity with other substances) and pesticides that produce a common toxic metabolite (in which case common mechanism of activity will be assumed).

When considering structural similarities with other chemicals, fomesafen falls into the class of ''biphenyl ether'' chemical compounds; this means that this group of chemicals have structural similarities, including a biphenyl ether group in common. This is used as a piece of supporting evidence for the classification of fomesafen as a Group C carcinogen, since other chemicals of this group (with similar structure) have been found to be carcinogens. However, other indications of the carcinogenicity of fomesafen (i.e., increases of adenomas and carcinomas in a mouse study, limited evidence of mutagenic effects) were also used in deciding this cancer classification. At this time, the Agency does not have sufficient understanding of the structural relationship to the mechanism of toxicity of these chemicals to conclude that they may be combined for the purposes of conducting a risk assessment. Although fomesafen contains some chemical structures in common with other chemicals that have been found to be carcinogens, EPA does not yet fully understand the implications of such a relationship, nor how, or if these structures relate to the toxicological activity of the chemical.

For the purposes of this tolerance action, therefore, EPA has not assumed that fomesafen has a common mechanism of toxicity with other substances.

C. Aggregate Risks and Determination of Safety for U.S. Population

1. *Acute risk.* For the population of concern (females 13+ years and older), the calculated aggregate MOE value is 33,000. The aggregate MOE is the reciprocal of the sum of the reciprocal MOE's for food (37,500) and water (260,000). This aggregate MOE does not exceed EPA's level of concern for acute dietary exposure.

2. *Chronic risk.* Using the conservative ARC exposure assumptions described above, EPA has concluded that aggregate exposure to fomesafen from food will utilize 1.6% (0.4% for food and 1.2% for water) of the RfD for the U.S. population. The major identifiable subgroup with the highest aggregate exposure is discussed below. EPA generally has no concern for exposures below 100% of the RfD because the RfD represents the level at or below which daily aggregate dietary exposure over a lifetime will not pose appreciable risks to human health. Despite the potential for exposure to fomesafen in drinking water, EPA does not expect the aggregate exposure to exceed 100% of the RfD. EPA concludes that there is a reasonable certainty that no harm will result from aggregate exposure to fomesafen residues.

D. Aggregate Cancer Risk for U.S. Population

Using the conservative exposure assumptions described above, the total dietary (food only) cancer risk is estimated at 9×10^{-7}. This is an overestimate, as not all of the snap bean crop in the eastern U.S. will be treated with fomesafen. For drinking water, the estimate of cancer risk is 2.7×10^{-6}. As stated above, this figure was based on extremely conservative assumptions, and thus is an overestimate; taking this into consideration, EPA scientists believe that the actual aggregate cancer risk will not exceed levels of concern, and there is reasonable certainty of ho harm to the U.S. population.

E. Aggregate Risks and Determination of Safety for Infants and Children

1. *Safety factor for infants and children.*— a. *In general.* In assessing the potential for additional sensitivity of infants and children to residues of fomesafen, EPA considered data from developmental toxicity studies in the rat and rabbit and a 2-generation reproduction study in the rat. The developmental toxicity studies are designed to evaluate adverse effects on the developing organism resulting from pesticide exposure during prenatal development to one or both parents. Reproduction studies provide information relating to effects from exposure to the pesticide on the reproductive capability of mating animals and data on systemic toxicity.

FFDCA section 408 provides that EPA shall apply an additional tenfold margin of safety for infants and children in the case of threshold effects to account for pre-and post-natal toxicity and the completeness of the database unless EPA determines that a different margin of safety will be safe for infants and children. Margins of safety are incorporated into EPA risk assessments either directly through use of a MOE analysis or through using uncertainty (safety) factors in calculating a dose level that poses no appreciable risk to humans. EPA believes that reliable data support using the standard MOE and uncertainty factor (usually 100 for combined inter- and intra-species variability) and not the additional tenfold MOE/uncertainty factor when EPA has a complete data base under existing guidelines and when the severity of the effect in infants or children or the potency or unusual toxic properties of a compound do not raise concerns regarding the adequacy of the standard MOE/safety factor.

b. *Developmental toxicity studies.* In the rat developmental toxicity study, the maternal (systemic) NOEL was established at 100 mg/kg/day, based on stained fur at the LOEL of 200 mg/kg/day. The developmental (fetal) NOEL was established at 7.5 mg/kg/day, based on extra ribs and delayed ossification at the LOEL of 50 mg/kg/day.

In the rabbit developmental toxicity study, the maternal (systemic) NOEL was established at 10 mg/kg/day, based on mortality and stomach lesions at the LOEL of 40 mg/kg/day. The developmental (fetal) NOEL was established at 40 mg/kg/day (highest dose tested).

c. *Reproductive toxicity study.* In the reproductive toxicity study in rats, the parental (systemic) NOEL was 12.5 mg/kg/day, based on decreased body weight and liver necrosis at the LOEL of 50 mg/kg/day. The reproductive and developmental (pup) NOELs were 2.5 mg/kg/day, based on decreased pup body weight and reduced litter size at the LOEL of 12.5 mg/kg/day.

d. *Pre- and post-natal sensitivity.* There were no developmental effects in rabbits at the highest dose tested, even in the presence of maternal toxicity. However, based on the developmental toxicity study in rats, developmental toxicity (alterations and delays in skeletal ossification) occurred at a dose level which was not maternally toxic, suggesting a special sensitivity to the fetus following in-utero exposure. Based on the results of the rat developmental toxicity study, an acute dietary risk assessment was conducted for females 13+ years of age. The MOE of 33,000 obtained for this risk assessment demonstrates that acute developmental (pre-natal) risks are low.

e. *Conclusion.* Based on the rat reproductive toxicity study discussed above, the pup LOEL (decreased body weight and reduced litter size) occurred at levels below the maternal NOEL and demonstrates post-natal pup toxicity unrelated to maternal effects. These results are suggestive of a special sensitivity for infants and children following post-natal exposure. The low percentage of the RfD occupied by the most highly exposed child subgroup (5.4% of the RfD) demonstrates that post-natal risks to infants and children are low, and EPA concludes that there

is reasonable certainty of no harm to infants and children.

2. *Acute risk.* The acute, aggregate dietary MOE of 33,000 which was calculated for females 13+ years old, accounts for both maternal and fetal exposure. The large agregate MOE calculated for females 13+ years old provides assurance that there is a reasonable certainty of no harm to infants and children.

3. *Chronic risk.* Using the conservative exposure assumptions described above, EPA has concluded that aggregate exposure to fomesafen from food and water utilizes from 4.5% of the RfD for nursing infants up to 5.4% of the RfD for non-nursing infants. As stated previously, the results from the developmental rat study suggest a special sensitivity to the fetus following in-utero exposure; and results from the reproductive rat study suggest a special sensitivity for infants and children following post-natal exposure. Therefore, EPA recommends applying an extra 10-fold uncertainty (safety) factor, which would bring the exposures given above to 45% and 54% of the RfD, for nursing and non-nursing infants, respectively. EPA generally has no concern for exposures below 100% of the RfD because the RfD represents the level at or below which daily aggregate dietary exposure over a lifetime will not pose appreciable risks to human health. The low percentage of the RfD occupied by estimates for the most highly exposed child population subgroup demonstrates that risks to infants and children are below EPA's level of concern. Despite the potential for exposure to fomesafen in drinking water and from non-dietary, non-occupational exposure, EPA does not expect the aggregate exposure to exceed 100% of the RfD. EPA concludes that there is a reasonable certainty that no harm will result to infants and children from aggregate exposure to fomesafen residues.

V. Other Considerations

A. Metabolism In Plants and Animals

The nature of the residues in plants and animals is adequately understood. The residue of conern is fomesafen per se. Secondary residues in meat, milk, poultry, and eggs are not expected, since snap beans are not considered a livestock feed commodity.

B. Analytical Enforcement Methodology

An adequate enforcement method (Method GAM-RM-001/86) is available to enforce fomesafen tolerances.

C. Magnitude of Residues

Residues of fomesafen are not likely to exceed 0.05 ppm in or on snap beans as a result of this use. No animal feed items are associated with this use, and therefore, no secondary residues in livestock commodities are expected to result.

D. International Residue Limits

There are no CODEX or Canadian maximum residue levels established for residues of fomesafen in or on snap beans. A Mexican tolerance of 0.01 ppm is established for fomesafen residues in or on ''beans''.

VI. Conclusion

Therefore, the tolerance is established for residues of fomesafen in snap beans at 0.05 ppm.

VII. Objections and Hearing Requests

The new FFDCA section 408(g) provides essentially the same process for persons to ''object'' to a tolerance regulation issued by EPA under new section 408(e) and (l)(6) as was provided in the old section 408 and in section 409. However, the period for filing objections is 60 days, rather than 30 days. EPA currently has procedural regulations which govern the submission of objections and hearing requests. These regulations will require some modification to reflect the new law. However, until those modifications can be made, EPA will continue to use those procedural regulations with appropriate adjustments to reflect the new law.

Any person may, by September 8, 1997 file written objections to any aspect of this regulation and may also request a hearing on those objections. Objections and hearing requests must be filed with the Hearing Clerk, at the address given above (40 CFR 178.20). A copy of the objections and/or hearing requests filed with the Hearing Clerk should be submitted to the OPP docket for this rulemaking. The objections submitted must specify the provisions of the regulation deemed objectionable and the grounds for the objections (40 CFR 178.25). Each objection must be accompanied by the fee prescribed by 40 CFR 180.33(i). If a hearing is requested, the objections must include a statement of the factual issues on which a hearing is requested, the requestor's contentions on such issues, and a summary of any evidence relied upon by the requestor (40 CFR 178.27). A request for a hearing will be granted if the Administrator determines that the material submitted shows the following: There is genuine and substantial issue of fact; there is a reasonable possibility that available evidence identified by the requestor would, if established, resolve one or more of such issues in favor of the requestor, taking into account uncontested claims or facts to the contrary; and resolution of the factual issues in the manner sought by the requestor would be adequate to justify the action requested (40 CFR 178.32). Information submitted in connection with an objection or hearing request may be claimed confidential by marking any part or all of that information as Confidential Business Information (CBI). Information so marked will not be disclosed except in accordance with procedures set forth in 40 CFR part 2. A copy of the information that does not contain CBI must be submitted for inclusion in the public record. Information not marked confidential may be disclosed publicly by EPA without prior notice.

VIII. Public Docket

EPA has established a record for this rulemaking under docket control number [OPP–300512] (including any comments and data submitted electronically). A public version of this record, including printed, paper versions of electronic comments, which does not include any information claimed as CBI, is available for inspection from 8:30 a.m. to 4 p.m., Monday through Friday, excluding legal holidays. The public record is located in Room 1132 of the Public Information and Records Integrity Branch, Information Resources and Services Division (7506C), Office of Pesticide Programs, Environmental Protection Agency, Crystal Mall #2, 1921 Jefferson Davis Hwy., Arlington, VA.

Electronic comments may be sent directly to EPA at:
opp-docket@epamail.epa.gov.

Electronic comments must be submitted as an ASCII file avoiding the use of special characters and any form of encryption.

The official record for this rulemaking, as well as the public version, as described above will be kept in paper form. Accordingly, EPA will transfer any copies of objections and hearing requests received electronically into printed, paper form as they are received and will place the paper copies in the official rulemaking record which will also include all comments submitted directly in writing. The official rulemaking record is the paper record maintained at the Virginia address in ''ADDRESSES'' at the beginning of this document.

IX. Regulatory Assessment Requirements

This final rule establishes a tolerance under FFDCA section 408(d) in response to a petition submitted to the Agency. The Office of Management and Budget (OMB) has exempted these types of actions from review under Executive Order 12866, entitled Regulatory Planning and Review (58 FR 51735, October 4, 1993). This final rule does not contain any information collections subject to OMB approval under the Paperwork Reduction Act (PRA), 44 U.S.C. 3501 *et seq.*, or impose any enforceable duty or contain any unfunded mandate as described under Title II of the Unfunded Mandates Reform Act of 1995 (UMRA) (Pub. L. 104–4). Nor does it require any prior consultation as specified by Executive Order 12875, entitled Enhancing the Intergovernmental Partnership (58 FR 58093, October 28, 1993), or special considerations as required by Executive Order 12898, entitled Federal Actions to Address Environmental Justice in Minority Populations and Low-Income Populations (59 FR 7629, February 16, 1994), or require OMB review in accordance with Executive Order 13045, entitled Protection of Children from Environmental Health Risks and Safety Risks (62 FR 19885, April 23, 1997).

In addition, since these tolerances and exemptions that are established on the basis of a petition under FFDCA section 408 (d), such as the tolerance in this final rule, do not require the issuance of a proposed rule, the requirements of the Regulatory Flexibility Act (RFA) (5 U.S.C. 601 *et seq.*) do not apply. Nevertheless, the Agency has previously assessed whether establishing tolerances, exemptions from tolerances, raising tolerance levels or expanding exemptions might adversely impact small entities and concluded, as a generic matter, that there is no adverse economic impact. The factual basis for the Agency's generic certification for tolerance acations published on May 4, 1981 (46 FR 24950), and was provided to the Chief Counsel for Advocacy of the Small Business Administration.

X. Submission to Congress and the General Accounting Office

Under 5 U.S.C. 801(a)(1)(A), as added by the Small Business Regulatory Enforcement Fairness Act of 1996, the Agency has submitted a report containing this rule and other required information to the U.S. Senate, the U.S. House of Representatives, and the Comptroller General of the General Accounting Office prior to publication of this rule in today's **Federal Register**. This is not a ''major rule'' as defined by 5 U.S.C. 804(2).

List of Subjects in 40 CFR Part 180

Environmental protection, Administrative practice and procedure, Agricultural commodities, Pesticides and pests, Reporting and recordkeeping requirements.

Dated: June 30, 1997.

James Jones,

Acting Director, Registration Division, Office of Pesticide Programs.

Therefore, 40 CFR chapter I is amended as follows:

PART 180 — [AMENDED]

1. The authority citation for part 180 continues to read as follows:

Authority: 21 U.S.C. 346a and 371.

2. Section 180.433 is amended by designating the existing text as paragraph (a) and adding a heading, by adding paragraph (b), and by adding and reserving paragraphs (c) and (d) to read as follows:

§ 180.433 Sodium salt of fomesafen; tolerance for residues.

(a) *General* . * * *

(b) *Section 18 emergency exemptions.* Time-limited tolerances are established for the residues of the herbicide fomesafen, in connection with use of the pesticide under section 18 emergency exemptions granted by EPA. The tolerances will expire on the dates specified in the following table.

Commodity	Parts per million	Expiration/Revocation Date
Bean, snap	0.05	June 30, 1998

(c) *Tolerances with regional registrations.* [Reserved]

(d) *Indirect or inadvertent residues.* [Reserved]

[FR Doc. 97–17933 Filed 7–8–97; 8:45 am]

BILLING CODE 6560–50–F

ENVIRONMENTAL PROTECTION AGENCY

40 CFR Part 180

[OPP–300508; FRL–5728–3]

RIN 2070–AB78

Azoxystrobin; Pesticide Tolerances

AGENCY: Environmental Protection Agency (EPA).

ACTION: Final Rule.

SUMMARY: This regulation establishes tolerances for residues of the fungicide azoxystrobin (CAS Reg. No. 131860–33–8 and PC Code 128810) and its Z-isomer in or on the raw agricultural commodities bananas, grapes, peaches, peanuts, pecans, and tomatoes, and the processed foods peanut oil and tomato paste. Zeneca Ag Products submitted three petitions to EPA under the Federal Food, Drug, and Cosmetic Act (FFDCA) as amended by the Food Quality Protection Act of 1996 (Pub. L. 104–170) requesting the tolerances. Azoxystrobin has been processed as a reduced risk pesticide for its uses in/on bananas, grapes, peaches, peanuts, and tomatoes.

DATES: This regulation became effective on June 3, 1997. Written objections and requests for hearings must be received on or before September 8, 1997.

ADDRESSES: Written objections and hearing requests, identified by the docket control number, [OPP–300508], may be submitted to: Hearing Clerk (1900), Environmental Protection Agency, Rm. M3708, 401 M St., SW., Washington, DC 20460. Fees accompanying objections and hearing requests shall be labeled ''Tolerance Petition Fees'' and forwarded to: EPA Headquarters Accounting Operations Branch, OPP (Tolerance Fees), P.O. Box 360277M, Pittsburgh, PA 15251. A copy of any objections and hearing requests filed with the Hearing Clerk should be identified by the document control number and submitted to: Public Information and Records Integrity Branch, Information Resources and Services (7506C), Office of Pesticide Programs, Environmental Protection Agency, 401 M St., SW., Washington, DC 20460. In person, bring copy of objections and hearing requests to: Rm. 1132, CM #2, 1921 Jefferson Davis Hwy., Arlington, VA 22202.

A copy of objections and hearing requests filed with the Hearing Clerk may also be submitted electronically by sending electronic mail (e-mail) to: opp-docket@epamail.epa.gov. Copies of objections and hearing requests must be submitted as an ASCII file avoiding the use of special characters and any form of encryption. Copies of objections and hearing requests will also be accepted on disks in WordPerfect in 5.1 file format or ASCII file format. All copies of objections and hearing requests in electronic form must be identified by the docket control number [OPP–300508]. No Confidential Business Information (CBI) should be submitted through e-mail. Electronic copies of objections and hearing requests on this rule may be filed online at many Federal Depository Libraries.

FOR FURTHER INFORMATION CONTACT: By mail: Cynthia Giles-Parker, Product Manager (22), Registration Division, Environmental Protection Agency, 401 M St., SW., Washington, DC 20460. Office location and telephone number and e-mail address: Room 247, CM #2, 1921 Jefferson Davis Highway, Arlington, VA (703–305–7740). e-mail: giles-parker.cynthia@epamail.epa.gov.

SUPPLEMENTARY INFORMATION: In the **Federal Register** of March 12, 1997 (62 FR 11442)(FRL–5589–6), EPA issued a notice pursuant to section 408(d) of the Federal Food, Drug, and Cosmetic Act (FFDCA), 346a(d), announcing the filing of three pesticide tolerance petitions (PP 5F4541, 6F4642, and 6F4762) by Zeneca Ag Products, 1800 Concord Pike, P.O. Box 15458, Wilmington, DE 19850–5458 to EPA requesting that the Administrator amend 40 CFR part 180 by establishing tolerances for residues of the fungicide, azoxystrobin, [methyl(e)-2-(2-(6-(2-cyanophenoxy) pyrimidin-4-yloxy)phenyl)-3-methoxyacrylate] and the Z-isomer of azoxystrobin, [methyl(*Z*)-2-(2-(6-(2-cyanophenoxy)pyrimidin-4-yloxy)phenyl)-3 methoxyacrylate] in or on the food commodities: grapes at 1.0 ppm; pecans at 0.01 ppm; tomato at 0.2 ppm; tomato paste at 0.6 ppm; peanut at 0.01 ppm; peanut oil at 0.03 ppm; peanut hay at 1.5 ppm; peach at 0.80 ppm; banana (whole fruit including peel) at 0.5 ppm; banana pulp at 0.05 ppm; wheat grain at 0.04 ppm; wheat bran at 0.12 ppm; wheat hay at 13.0 ppm; wheat straw at 4.0 ppm; fat of cattle, goats, poultry, sheep, hogs, and horses at 0.01 ppm; mbyp of cattle, goats, poultry, sheep, hogs, and horses at 0.01 ppm; meat of cattle, goats, poultry, sheep, hogs, and horses at 0.01 ppm; poultry liver at 0.01 ppm; and milk at 0.006 ppm.

As required by section 408(d) of the FFDCA, as recently amended by the Food Quality Protection Act of 1996 (FQPA), Pub. L. 104–170, Zeneca Ag Products included in the notice of filing a summary of the petition and authorization for the summary to be published in the **Federal Register** in a notice of receipt of the petition. The summary of the petition prepared by the petitioner contained conclusions and assessments to support its contention that the petition complied with the FQPA elements set forth in section 408(d)(3) of the FFDCA. There were no comments received in response to the notice of filing.

On May 7, 1997, Zeneca Ag Products withdrew the proposed tolerances in/on peanut hay; banana pulp; wheat grain, bran, hay, and straw; cattle, goat, hog, horse, and sheep fat, meat byproducts, and meat; poultry fat, liver, meat byproducts, and meat; and milk. This leaves the proposed bananas (whole fruit including peel), grapes, peaches, peanuts, peanut oil, pecans, tomatoes, and tomato paste tolerances, at their originally proposed values.

I. Statutory Background

Section 408 of the Federal Food, Drug, and Cosmetic Act (FFDCA), 21 U.S.C. 301 et seq., as amended by the FQPA, Pub. L. 104–170, authorizes the establishment of tolerances (maximum residue levels), exemptions from the requirement of a tolerance, modifications in tolerances, and revocation of tolerances for residues of pesticide chemicals in or on food commodities and processed foods. Without a tolerance or exemption, food containing pesticide residues is considered to be unsafe and therefore ''adulterated'' under section 402(a) of the FFDCA, and hence may not legally be moved in interstate commerce. For a pesticide to be sold and distributed, the pesticide must not only have appropriate tolerances under the FFDCA, but also must be registered under section 3 of the Federal Insecticide, Fungicide, and Rodenticide Act (FIFRA, 7 U.S.C. 135 *et seq.*).

Section 408 was substantially amended by the FQPA. Among other things, the FQPA amends the FFDCA to bring all EPA pesticide tolerance-setting activities under a new section 408 with a new safety standard and new procedures. New section 408(b)(2)(A)(i) allows EPA to establish a tolerance (the legal limit for a pesticide chemical residue in or on a food) only if EPA determines that the tolerance is ''safe.'' Section 408(b)(2)(A)(ii) defines ''safe'' to mean that ''there is a reasonable certainty that no harm will result from aggregate exposure to the pesticide chemical residue, including all anticipated dietary exposures and all other exposures for which there is reliable information.'' This includes exposure through food, drinking water, and from pesticide use in gardens, lawns, or buildings (residential and other indoor uses) but does not include occupational exposure. Section 408(b)(2)(C) requires EPA to give special consideration to exposure of infants and children to the pesticide chemical residue in establishing a tolerance and to ''ensure that there is a reasonable certainty that no harm will result to infants and children from aggregate exposure to the pesticide chemical residue....''

II. Risk Assessment and Statutory Findings

EPA performs a number of analyses to determine the risks from aggregate exposure to pesticide residues. First, EPA determines the toxicity of pesticides based primarily on toxicological studies using laboratory animals. These studies address many adverse health effects, including (but not limited to) reproductive effects, developmental toxicity, toxicity to the nervous system, and carcinogenicity. Second, EPA examines exposure to the pesticide through the diet (e.g., food and drinking water) and through exposures that occur as a result of pesticide use in residential settings.

A. Toxicity

1. *Threshold and non-threshold effects.* For many animal studies, a dose response relationship can be determined, which provides a dose that causes adverse effects (threshold effects) and doses causing no observed effects (the ''no-observed-effect level'' or ''NOEL'').

Once a study has been evaluated and the observed effects have been determined to be threshold effects, EPA generally divides the NOEL from the study with the lowest NOEL by an uncertainty factor (usually 100 or more) to determine the Reference Dose (RfD). The RfD is a level at or below which daily aggregate exposure over a lifetime will not pose appreciable risks to human health. An uncertainty factor (sometimes called a ''safety factor'') of 100 is commonly used since it is assumed that people may be up to 10 times more sensitive to pesticides than the test animals, and that one person or subgroup of the population (such as infants and children) could be up to 10 times more sensitive to a pesticide than another. In addition, EPA addresses the potential risks to infants and children

based on the weight of the evidence of the toxicology studies and determines whether an additional uncertainty factor is warranted. Thus, an aggregate daily exposure to a pesticide residue at or below the RfD (expressed as 100% or less of the RfD) is generally considered acceptable by EPA. EPA generally uses the RfD to evaluate the chronic risks posed by pesticide exposure. For shorter term risks, EPA calculates a margin of exposure (MOE) by dividing the estimated human exposure into the NOEL from the appropriate animal study. Commonly, EPA finds MOEs lower than 100 to be unacceptable. This hundredfold margin of exposure is based on the same rationale as the hundredfold uncertainty factor.

Lifetime feeding studies in two species of laboratory animals are conducted to screen pesticides for cancer effects. When evidence of increased cancer is noted in these studies, the Agency conducts a weight of the evidence review of all relevant toxicological data including short-term and mutagenicity studies and structure activity relationships. Once a pesticide has been classified as a potential human carcinogen, different types of risk assessments (e.g., linear low dose extrapolations or margin of exposure (MOE) calculations based on the appropriate NOEL) will be carried out based on the nature of the carcinogenic response and the Agency's knowledge of its mode of action.

2. *Differences in toxic effect due to exposure duration.* The toxicological effects of a pesticide can vary with different exposure durations. EPA considers the entire toxicity data base, and based on the effects seen for different durations and routes of exposure, determines which risk assessments should be done to assure that the public is adequately protected from any pesticide exposure scenario. Both short and long durations of exposure are always considered. Typically, risk assessments include ''acute'', ''short-term'', ''intermediate term'', and ''chronic''. These assessments are defined by the Agency as follows.

i. *Acute risk.* Acute risk, by the Agency's definition, results from 1-day consumption of food and water, and reflects toxicity which could be expressed following a single oral exposure to the pesticide residues. High end exposure to food and water residues are typically assumed.

ii. *Short-term risk.* Short-term risk results from exposure to the pesticide for a period of 1 to 7 days, and therefore overlaps with the acute risk assessment. Historically, this risk assessment was intended to address primarily dermal and inhalation exposure which could result, for example, from residential pesticide applications. However, since enactment of FQPA, this assessment has been expanded to include both dietary and non-dietary sources of exposure, and will typically consider exposure from food, water, and residential uses when reliable data are available. In this assessment, risks from average food and water exposure, and high-end residential exposure, are aggregated. High-end exposures from all three sources are not typically added because of the very low probability of this occurring in most cases, and because the other conservative assumptions built into the assessment assure adequate protection of public health. However, for cases in which high-end exposure can reasonably be expected from multiple sources (e.g. frequent and widespread homeowner use in a specific geographical area), multiple high-end risks will be aggregated and presented as part of the comprehensive risk assessment/characterization. Since the toxicological endpoint considered in this assessment reflects exposure over a period of at least 7 days, an additional degree of conservatism is built into the assessment; i.e., the risk assessment nominally covers 1 to 7 days exposure, and the toxicological endpoint/NOEL is selected to be adequate for at least 7 days of exposure. (Toxicity results at lower levels when the dosing duration is increased.)

iii. *Intermediate-term risk.* Intermediate-term risk results from exposure for 7 days to several months. This assessment is handled in a manner similar to the short-term risk assessment.

iv. *Chronic risk assessment.* Chronic risk assessment describes risk which could result from several months to a lifetime of exposure. For this assessment, risks are aggregated considering average exposure from all sources for representative population subgroups including infants and children.

B. Aggregate Exposure

In examining aggregate exposure, FFDCA section 408 requires that EPA take into account available and reliable information concerning exposure from the pesticide residue in the food in question, residues in other foods for which there are tolerances, residues in groundwater or surface water that is consumed as drinking water, and other non-occupational exposures through pesticide use in gardens, lawns, or buildings (residential and other outdoor uses). Dietary exposure to residues of a pesticide in a food commodity are estimated by multiplying the average daily consumption of the food forms of that commodity by the tolerance level or the anticipated pesticide residue level. The Theoretical Maximum Residue Contribution (TMRC) is an estimate of the level of residues consumed daily if each food item contained pesticide residues equal to the tolerance. In evaluating food exposures, EPA takes into account varying consumption patterns of major identifiable subgroups of consumers, including infants and children. The TMRC is a ''worst case'' estimate since it is based on the assumptions that food contains pesticide residues at the tolerance level and that 100% of the crop is treated by pesticides that have established tolerances. If the TMRC exceeds the RfD or poses a lifetime cancer risk that is greater than approximately one in a million, EPA attempts to derive a more accurate exposure estimate for the pesticide by evaluating additional types of information (anticipated residue data and/or percent of crop treated data) which show, generally, that pesticide residues in most foods when they are eaten are well below established tolerances.

Percent of crop treated estimates are derived from Federal and private market survey data. Typically, a range of estimates are supplied and the upper end of this range is assumed for the exposure assessment. By using this upper end estimate of percent of crop treated, the Agency is reasonably certain that exposure is not understated for any significant subpopulation group. Further, regional consumption information is taken into account through EPA's computer-based model for evaluating the exposure of significant subpopulations including several regional groups, to pesticide residues. For this pesticide, the most highly exposed population subgroup, Non-nursing Infants, was not regionally based.

III. Toxicological Profile

EPA has evaluated the available toxicity data and considered its validity, completeness, and reliability as well as the relationship of the results of the studies to human risk. EPA has also considered available information concerning the variability of the sensitivities of major identifiable subgroups of consumers, including infants and children. The nature of the toxic effects caused by azoxystrobin is discussed below.

1. *Acute toxicity.* The acute oral toxicity study in rats of technical azoxystrobin resulted in an LD_{50} of >

5,000 milligrams/kilogram (limit test) for both males and females. The acute dermal toxicity study in rats of technical azoxystrobin resulted in an LD_{50} of > 2,000 milligrams/kilogram (limit dose). The acute inhalation study of technical azoxystrobin in rats resulted in an LC_{50} of 0.962 milligrams/liter in males and 0.698 milligrams/liter in females. In an acute oral neurotoxicity study in rats dosed once by gavage with 0, 200, 600, or 2,000 milligrams/kilogram azoxystrobin, the systemic toxicity NOEL was <200 milligrams/kilogram and the systemic toxicity LOEL was 200 milligrams/kilogram, based on the occurrence of transient diarrhea in both sexes. There was no indication of neurotoxicity at the doses tested. This acute neurotoxicity study is considered supplementary (upgradeable) but the data required are considered only to be confirmatory. The company has submitted the required confirmatory data; these data have been scheduled for review by the Agency.

2. *Mutagenicity.* Azoxystrobin was negative for mutagenicity in the salmonella/mammalian activation gene mutation assay, the mouse micronucleus test, and the unscheduled DNA synthesis in rat hepatocytes/mammalian cells (*in vivo/in vitro* procedure study). In the forward mutation study using L5178 mouse lymphoma cells in culture, azoxystrobin tested positive for forward gene mutation at the TK locus. In the *in vitro* human lymphocytes cytogenetics assay of azoxystrobin, there was evidence of a concentration related induction of chromosomal aberrations over background in the presence of moderate to severe cytotoxicity.

3. *Rat metabolism.* In this study, azoxystrobin—unlabeled or with a pyrimidinyl, phenylacrylate, or cyanophenyl label—was administered to rats by gavage as a single or 14–day repeated doses. Less than 0.5% of the administered dose was detected in the tissues and carcass up to 7 days post-dosing and most of it was in excretion-related organs. There was no evidence of potential for bioaccumulation. The primary route of excretion was via the feces, though 9 to 18% was detected in the urine of the various dose groups. Absorbed azoxystrobin appeared to be extensively metabolized. A metabolic pathway was proposed showing hydrolysis and subsequent glucuronide conjugation as the major biotransformation process. This study was classified as supplementary but upgradeable; the company has submitted data intended to upgrade the study to acceptable and these data have been scheduled for review.

4. *Sub-chronic toxicity.* i. In a 90–day rat feeding study the NOEL was 20.4 mg/kg/day for males and females. The LOEL was 211.0 mg/kg/day based on decreased weight gain in both sexes, clinical observations of distended abdomens and reduced body size, and clinical pathology findings attributable to reduced nutritional status.

ii. In a subchronic toxicity study in which azoxystrobin was administered to dogs by capsule for 92 or 93 days, the NOEL for both males and females was 50 mg/kg/day. The LOEL was 250 mg/kg/day, based on treatment-related clinical observations and clinical chemistry alterations at this dose.

iii. In a 21–day repeated-dose dermal rat study using azoxystrobin, the NOEL for both males and females was greater than or equal to 1000 mg/kg/day (the highest dosing regimen); a LOEL was therefore not determined.

5. *Chronic feeding toxicity and carcinogenicity.* i. In a 2–year feeding study in rats fed diets containing 0, 60, 300, and 750/1,500 ppm (males/females), the systemic toxicity NOEL was 18.2 mg/kg/day for males and 22.3 mg/kg/day for females. The systemic toxicity LOEL for males was 34 mg/kg/day, based on reduced body weights, food consumption, and food efficiency; and bile duct lesions. The systemic toxicity LOEL for females was 117.1 mg/kg/day, based on reduced body weights. There was no evidence of carcinogenic activity in this study.

ii. In a 1–year feeding study in dogs to which azoxystrobin was fed by capsule at doses of 0, 3, 25, or 200 mg/kg/day, the NOEL for both males and females was 25 mg/kg/day and the LOEL was 200 mg/kg/day for both sexes, based on clinical observations, clinical chemistry changes, and liver weight increases that were observed in both sexes.

iii. In a 2–year carcinogenicity feeding study in mice using dosing concentrations of 0, 50, 300, or 2,000 ppm, the systemic toxicity NOEL was 37.5 mg/kg/day for both males and females. The systemic toxicity LOEL was 272.4 mg/kg/day for both sexes, based on reduced body weights in both at this dose. There was no evidence of carcinogenicity at the dose levels tested.

According to the new proposed guidelines for Carcinogen Risk Assessment (April, 1996), the appropriate descriptor for human carcinogenic potential of azoxystrobin is ''Not Likely.'' The appropriate subdescriptor is ''has been evaluated in at least two well conducted studies in two appropriate species without demonstrating carcinogenic effects.''

6. *Developmental and reproductive toxicity.* i. In a prenatal development study in rats gavaged with azoxystrobin at dose levels of 0, 25, 100, or 300 mg/kg/day during days 7 through 16 of gestation, lethality at the highest dose caused the discontinuation of dosing at that level. The developmental NOEL was greater than or equal to 100 mg/kg/day and the developmental LOEL was > 100 mg/kg/day because no significant adverse developmental effects were observed. In this same study, the maternal NOEL was not established; the maternal LOEL was 25 mg/kg/day, based on increased salivation.

ii. In a prenatal developmental study in rabbits gavaged with 0, 50, 150, or 500 mg/kg/day during days 8 through 20 of gestation, the developmental NOEL was 500 mg/kg/day and the developmental LOEL was > 500 mg/kg/day because no treatment-related adverse effects on development were seen. The maternal NOEL was 150 mg/kg/day and the maternal LOEL was 500 mg/kg/day, based on decreased body weight gain.

iii. in a two-generation reproduction study, rats were fed 0, 60, 300, or 1,500 ppm of azoxystrobin. The reproductive NOEL was 32.2 mg/kg/day. The reproductive LOEL was 165.4 mg/kg/day; reproductive toxicity was demonstrated as treatment-related reductions in adjusted pup body weights as observed in the F1a and F2a pups dosed at 1,500 ppm (165.4 mg/kg/day).

IV. Aggregate Exposures

1. *From food and feed uses.* The primary route of human exposure to azoxystrobin is expected to be dietary ingestion of both raw and processed agricultural commodities from Bananas, Grapes, Peaches, Peanuts, Pecans, and Tomatoes. A Dietary Risk Evaluation System (DRES) chronic exposure analysis was conducted using tolerance level residues and 100% crop treated information to estimate the TMRC for the general population and 22 subgroups.

2. *From potable water.* There is no established Maximum Concentration Level for residues of azoxystrobin in drinking water. Data indicate moderate potential for soil mobility or leaching and azoxystrobin is moderately persistent. In examining aggregate exposure, the FQPA directs EPA to consider available information concerning exposures from the pesticide residue in food and all other non-occupational exposures. The primary non-food sources of exposure the Agency looks at include drinking water (whether from groundwater or surface

water), and exposure through pesticide use in gardens, lawns, or buildings (residential and other indoor uses).

Because the Agency lacks sufficient water-related exposure data to complete a comprehensive drinking water risk assessment for many pesticides, EPA has commenced and nearly completed a process for identifying a reasonable yet conservative bounding figure for the potential contribution of water related exposure to the aggregate risk posed by a pesticide. In developing the bounding figure, EPA estimated residue levels in water for a number of specific pesticides using various data sources. The Agency then applied the estimated residue levels, in conjunction with appropriate toxicological endpoints (RfDs or acute dietary NOELs) and assumptions about body weight and consumption to calculate, for each pesticide, the increment of aggregate risk contributed by consumption of contaminated water. The Agency has not yet pinpointed the appropriate bounding figure for consumption of water contaminated with azoxystrobin but the ranges the Agency is continuing to examine are all below the level that would cause azoxystrobin to exceed the RfD if the proposed food uses were granted. The Agency has therefore concluded that the potential exposures associated with azoxystrobin in water, even at the higher levels the Agency is considering as a conservative upper bound, would not prevent the Agency from determining that there is a reasonable certainty of no harm if the proposed uses of bananas, grapes, peaches, peanuts, pecans, and tomatoes were granted.

3. *From non-dietary uses.* The Agency evaluated the existing toxicological database for azoxystrobin and assessed appropriate toxicological endpoints and dose levels of concern that should be assessed for risk assessment purposes. Dermal absorption data indicate that absorption is less than or equal to 4%. No appropriate endpoints were identified for acute dietary or short term, intermediate term, and chronic term (noncancer) dermal and inhalation occupational or residential exposure. Therefore, risk assessments are not required for these exposure scenarios and there are no residential risk assessments to aggregate with the chronic dietary risk assessment.

4. *Cumulative exposure to substances with common mechanism of toxicity.* Section 408(b)(2)(D)(v) requires that, when considering whether to establish, modify, or revoke a tolerance, the Agency consider ''available information'' concerning the cumulative effects of a particular pesticide's residues and ''other substances that have a common mechanism of toxicity.'' The Agency believes that ''available information'' in this context might include not only toxicity, chemistry, and exposure data, but also scientific policies and methodologies for understanding common mechanisms of toxicity and conducting cumulative risk assessments. For most pesticides, although the Agency has some information in its files that may turn out to be helpful in eventually determining whether a pesticide shares a common mechanism of toxicity with any other substances, EPA does not at this time have the methodologies to resolve the complex scientific issues concerning common mechanism of toxicity in a meaningful way. EPA has begun a pilot process to study this issue further through the examinations of particular classes of pesticides. The Agency hopes that the results of this pilot process will increase the Agency's scientific understanding of this question such that EPA will be able to develop and apply scientific principles for better determining which chemicals have a common mechanism of toxicity and evaluating the cumulative effects of such chemicals. The Agency anticipates, however, that even as its understanding of the science of common mechanisms increases, decisions on specific classes of chemicals will be heavily dependent on chemical specific data, much of which may not be presently available.

Although at present the Agency does not know how to apply the information in its files concerning common mechanism issues to most risk assessments, there are pesticides as to which the common mechanism issues can be resolved. These pesticides include pesticides that are toxicologically dissimilar to existing chemical substances (in which case the Agency can conclude that it is unlikely that a pesticide shares a common mechanism of activity with other substances) and pesticides that produce a common toxic metabolite (in which case common mechanism of activity will be assumed).

EPA does not have, at this time, available data to determine whether azoxystrobin has a common mechanism of toxicity with other substances or how to include this pesticide in a cumulative risk assessment. Unlike other pesticides for which EPA has followed a cumulative risk approach based on a common mechanism of toxicity, azoxystrobin does not appear to be structurally similar to any other pesticide chemical at this time. No metabolites of azoxystrobin that are of toxicological concern are known to the Agency. Azoxystrobin appears to be the only pesticide member of its class of chemistry and there are no reliable data to indicate that this chemical is structurally or toxicologically similar to existing chemical substances at this time. Therefore, it appears unlikely that azoxystrobin bears a common mechanism of activity with other substances. For the purposes of this tolerance action, therefore, EPA has not assumed that azoxystrobin has a common mechanism of toxicity with other substances.

V. Determination of Safety

A. Chronic Risk

The Reference Dose (RfD) for azoxystrobin is 0.18 mg/kg/day, based on the NOEL of 18.2 mg/kg/day from the rat chronic toxicity/carcinogenicity feeding study in which decreased body weight and bile duct lesions were observed in male rats at the LOEL of 34 mg/kg/day. This NOEL was divided by an Uncertainty Factor of 100, to allow for interspecies sensitivity and intraspecies variability.

The chronic dietary exposure analysis showed that exposure from the proposed new tolerances in or on banana, grape, peach, peanut, peanut oil, pecan, tomato, and tomato paste for Non-nursing Infants (the subgroup with the highest exposure) would be 1% of the RfD. The exposure for the general U.S. population would be less than 1% of the RfD. This analysis used a value of 0.05 ppm for banana pulp rather than the value of 0.5 that has been established for banana (whole fruit including peel) because adequate data were submitted to support use of the lower value in the dietary risk analyses. When the chronic dietary exposure analysis was performed with the addition of the tolerances for rice, milk, meat, eggs, and poultry that result from the granting of section 18 registrations for use on rice to Louisiana and Mississippi, about 1% of the RfD is used for the U.S. Population and about 5% of the RfD is used for Non-nursing Infants.

As is discussed above, there is no established Maximum Concentration Level for residues of azoxystrobin in drinking water. The Agency has not yet pinpointed the appropriate bounding figure for consumption of water contaminated with azoxystrobin but the ranges the Agency is continuing to examine are all below the level that would cause azoxystrobin to exceed the RfD if the proposed food uses were granted. The Agency has therefore concluded that the potential exposures associated with azoxystrobin in water, even at the higher levels the Agency is

considering as a conservative upper bound, would not prevent the Agency from determining that there is a reasonable certainty of no harm if the proposed uses on bananas, grapes, peaches, peanuts, pecans, and tomatoes were granted.

B. Acute Risk

As part of the hazard assessment process, the Agency reviews the available toxicological database to determine if there are toxicological endpoints of concern. For azoxystrobin, the Agency does not have a concern for acute dietary exposure since the available data do not indicate any evidence of significant toxicity from a one-day or single event exposure by the oral route. Therefore, an acute dietary risk assessment is not required for azoxystrobin at this time.

C. Conclusion

Based on these risk estimates EPA concludes that there is a reasonable certainty of no harm from aggregate exposure to azoxystrobin for consumers, including major identifiable subgroups and infants and children.

VI. Additional Safety Factor for Infants and Children

FFDCA section 408 provides that EPA shall apply an additional tenfold margin of safety for infants and children in the case of threshold effects to account for pre- and post-natal toxicity and the completeness of the database unless EPA determines that a different margin of safety will be safe for infants and children. Margins of safety are incorporated into EPA risk assessments either directly through use of a margin of exposure analysis or through using uncertainty (safety) factors in calculating a dose level that poses no appreciable risk to humans. In either case, EPA generally defines the level of appreciable risk as exposure that is greater than 1/100 of the no observed effect level in the animal study appropriate to the particular risk assessment. This hundredfold uncertainty (safety) factor/margin of exposure (safety) is designed to account for combined inter- and intra-species variability. EPA believes that reliable data support using the standard hundredfold margin/factor but not the additional tenfold margin/factor when EPA has a complete data base under existing guidelines and when the severity of the effect in infants or children or the potency or unusual toxic properties of a compound do not raise concerns regarding the adequacy of the standard margin/factor. The data base for azoxystrobin is complete except that the acute and subchronic neurotoxicity studies require upgrading. The upgrade data are confirmatory only, have been submitted by the company, and await review by the Agency.

There was no evidence of increased susceptibility of infants or children to azoxystrobin. Therefore, no additional uncertainty factors are considered necessary at this time.

VII. Other Considerations

1. *Endocrine effects.* EPA is required to develop a screening program to determine whether certain substances (including all pesticides and inerts) ''may have an effect in humans that is similar to an effect produced by a naturally occurring estrogen, or such other endocrine effect...''. The Agency is currently working with interested shareholders, including other government agencies, public interest groups, industry, and research scientists, to develop a screening and testing program and a priority setting scheme to implement this program. Congress has allowed three (3) years from the passage of FQPA (August 3, 1999) to implement this program. When this program is implemented, EPA may require further testing of azoxystrobin and end-use product formulations for endocrine disrupter effects.

2. *Metabolism in plants and animals.* The metabolism of azoxystrobin in plants is adequately understood for purposes of these tolerances. Since the proposed label does not contain any commodities that are considered to be significant items of livestock feed, the nature of the residue in animals is not of concern at this time. There are no Codex Alimentarius Commission (Codex) Maximum Residue Levels (MRLs) for azoxystrobin. Adequate analytical methods, gas chromatography with nitrogen-phosphorous detection and high performance liquid chromatography with ultraviolet detection, are available for enforcement purposes. Because of the long lead time from establishing these tolerances to publication of the enforcement methodology in the Pesticide Analytical Manual, Vol. II, the analytical method is being made available in the interim to anyone interested in pesticide enforcement when requested from: Calvin Furlow, Public Information and Records Integrity Branch, Information Resources and Services Division (7506C), Office of Pesticide Programs, Environmental Protection Agency, 401 M St., SW., Washington, DC 20460. Office location and telephone number: Room 1130A, CM #2, 1021 Jefferson Davis Highway, Arlington, VA (703–305–5937).

3. *Data requirements.* In accordance with section 408(b)(2)(E)(ii) of the Federal Food, Drug, and Cosmetic Act (FFDCA), because anticipated or actual residue levels are being relied on for banana pulp, the Agency is requiring, pursuant to section 408(f)(1), that data be provided 5 years after the date on which the tolerance is established, modified, or left in effect, and thereafter as the Administrator deems appropriate, demonstrating that such residue levels are not above the levels so relied on. If such data are not so provided, or if the data do not demonstrate that the residue levels are not above the levels so relied on, the Administrator shall, not later than 180 days after the date on which the data were required to be provided, issue a regulation under section 408(e)(1), or an order under section 408(f)(2), as appropriate, to modify or revoke the tolerance.

VIII. Summary of Findings

The analysis for azoxystrobin for all population subgroups examined by EPA shows that the proposed uses on bananas, grapes, peaches, peanuts, pecans, and tomatoes will not cause exposure at which the Agency believes there is an appreciable risk.

Based on the information cited above, the Agency has determined that the establishment of the tolerances by amending 40 CFR part 180 will be safe; therefore, the tolerances are established as set forth below.

IX. Objections and Hearing Requests

The new FFDCA section 408(g) provides essentially the same process for persons to ''object'' to a tolerance regulation issued by EPA under new section 408(e) and (1)(6) as was provided in the old section 408 and in section 409. However, the period for filing objections is 60 days, rather than 30 days. EPA currently has procedural regulations which govern the submission of objections and hearing requests. These regulations will require some modification to reflect the new law. However, until these modifications can be made, EPA will continue to use those procedural regulations with appropriate adjustments to reflect the new law.

Any person may, by September 8, 1997, file written objections to any aspect of this regulation and may also request a hearing on those objections. Objections and hearing requests must be filed with the Hearing Clerk, at the address given above (40 CFR 178.20). A copy of the objections and/or hearing requests filed with the Hearing Clerk should be submitted to the OPP docket for this rulemaking. The objections

submitted must specify the provisions of the regulation deemed objectionable and the grounds for the objections (40 CFR 178.25). Each objection must be accompanied by the fee proscribed by 40 CFR 180.33(i). If a hearing is requested, the objections must include a statement of the factual issue(s) on which a hearing is requested, the requestor's contention on such issues, and a summary of any evidence relied upon by the objector (40 CFR 178.27). A request for a hearing will be granted if the Administrator determines that the material submitted shows the following: There is a genuine and substantial issue of fact; there is a reasonable possibility that available evidence identified by the requestor would, if established, resolve one or more of such issues in favor of the requestor, taking into account uncontested claims or facts to the contrary; and resolution of the factual issue(s) in the manner sought by the requestor would be adequate to justify the action requested (40 CFR 178.32). Information submitted in connection with an objection or hearing request may be claimed confidential by marking any part or all of that information as CBI. Information so marked will not be disclosed except in accordance with procedures set forth in 40 CFR part 2. A copy of the information that does not contain CBI must be submitted for inclusion in the public record. Information not marked confidential may be disclosed publicly by EPA without prior notice.

X. Public Docket

A record has been established for this rulemaking under the docket number [OPP–300508] (including any comments and data submitted electronically). A public version of this record, including printed, paper versions of electronic comments, which does not include any information claimed as CBI, is available for inspection from 8:30 a.m. to 4 p.m., Monday through Friday, excluding legal holidays. The public record is located in Room 1132, Public Information and Records Integrity Branch, Information Resources and Services Division (7506C), Office of Pesticide Programs, Environmental Protection Agency, Crystal Mall # 2, 1921 Jefferson Davis Highway, Arlington, VA.

Electronic comments can be sent directly to EPA at:

opp-docket@epamail.epa.gov

Electronic comments must be submitted as an ASCII file avoiding the use of special characters and any form of encryption.

The official record for this rulemaking, as well as the public version, as described above will be kept in paper form. Accordingly, EPA will transfer any copies of objections and hearing requests received electronically into printed, paper form as they are received and will place the paper copies in the official rule-making record which will also include all comments submitted directly in writing. The official rulemaking record is the paper record maintained at the address in ''ADDRESSES'' at the beginning of this document.

XI. Regulatory Assessment Requirements

This final rule establishes tolerances under section 408 of the FFDCA and is in response to petitions received by the Agency requesting the establishment of such tolerances. The Office of Management and Budget (OMB) has exempted these types of actions from review under Executive Order 12866, entitled Regulatory Planning and Review (58 FR 51735, October 4, 1993). In addition, this final rule does not contain any information collections subject to OMB approval under the Paperwork Reduction Act (PRA), 44 U.S.C. 3501 et seq., or impose any enforceable duty or contain any unfunded mandate as described under Title II of the Unfunded Mandates Reform Act of 1995 (UMRA)(Pub.L. 104–4). Nor does it require any prior consultation as specified by Executive Order 12875, entitled Enhancing the Intergovernmental Partnership (58 FR 58093, October 28, 1993), or special considerations as required by Executive Order 12898, entitled Federal Actions to Address Environmental Justice in Minority Populations and Low-Income Populations (59 FR 7629, February 16, 1994), or require OMB review in accordance with Executive Order 13045, entitled Protection of Children from Environmental Health Risks and Safety Risks (62 FR 19885, April 23, 1997).

In addition, because tolerances that are established on the basis of a petition under section 408(d) of FFDCA, such as the tolerance in this final rule, do not require the issuance of a proposed rule, the requirements of the Regulatory Flexibility Act (RFA)(5 U.S.C. 601 et seq.) do not apply. Prior to the recent amendments to the FFDCA, however, EPA had treated such actions as subject to the RFA. The amendments to the FFDCA clarify that no proposed rule is required for such regulatory actions, which makes the RFA inapplicable to these actions. Nevertheless, the Agency has previously assessed whether establishing tolerances, exemptions from tolerances, raising tolerance levels, or expanding exemptions might adversely impact small entities and concluded, as a generic matter, that there is no adverse economic impact (46 FR 24950, May 4, 1981). In accordance with Small Business Administration (SBA) policy, this determination will be provided to the Chief Counsel for Advocacy of the SBA upon request.

XII. Submission to Congress and the General Accounting Office

Under 5 U.S.C. 801(a)(1)(A), as added by the Small Business Regulatory Enforcement Fairness Act of 1996, the Agency has submitted a report containing this rule and other required information to the U.S. Senate, the U.S. House of Representatives, and the Comptroller General of the General Accounting Office prior to publication of this rule in today's **Federal Register**. This is not a ''major rule'' as defined by 5 U.S.C. 804(2).

List of Subjects in 40 CFR Part 180

Administrative practice and procedure, Agricultural commodities, Pesticides and pests, Recording and recordkeeping requirements

Dated: July 1, 1997.

Daniel M. Barolo,

Director, Office of Pesticide Programs.

Therefore, 40 CFR part 180 is amended as follows:

PART 180—[AMENDED]

1. The authority citation for part 180 continues to read as follows:

Authority: 21 U.S.C. 236a and 371.

2. Section 180.507 is amended by adding the text of paragraph (a) to read as follows:

§ 180.507 Azoxystrobin; tolerances for residues.

(a) *General.* Tolerances are established for residues of the fungicide, azoxystrobin, [methyl(*E*)-2-(2-(6-(2-cyanophenoxy) pyrimidin-4-yloxy)phenyl)-3-methoxyacrylate] and the Z-isomer of azoxystrobin, [methyl(*Z*)-2-(2-(6-(2-cyanophenoxy)pyrimidin-4-yloxy)phenyl)-3 methoxyacrylate] in or on the following raw agricultural commodities and processed food:

Commodity	Parts per million
Bananas	0.5
Grapes	1.0
Peaches	0.80
Peanuts	0.01
Peanut Oil	0.03
Pecans	0.01
Tomatoes	0.2

Commodity	Parts per million
Tomato Paste	0.6

* * * * *

[FR Doc. 97–17931 Filed 7–8–97; 8:45 am]

BILLING CODE 6560–50–F

ENVIRONMENTAL PROTECTION AGENCY

40 CFR Part 180

[OPP–300511; FRL–5729–4]

RIN 2070–AB78

Imidacloprid; Pesticide Tolerances for Emergency Exemptions

AGENCY: Environmental Protection Agency (EPA).

ACTION: Final rule.

SUMMARY: This regulation establishes time-limited tolerances for combined residues of imidacloprid in or on the crop group citrus fruits and processed commodity dried citrus pulp. This action is in response to EPA's granting of an emergency exemption under section 18 of the Federal Insecticide, Fungicide, and Rodenticide Act authorizing use of the pesticide on citrus. This regulation establishes a maximum permissible level for residues of imidacloprid in this food commodity pursuant to section 408(l)(6) of the Federal Food, Drug, and Cosmetic Act, as amended by the Food Quality Protection Act of 1996. These tolerances will expire and are revoked on December 31, 1998.

DATES: This regulation is effective July 9, 1997. Objections and requests for hearings must be received by EPA on or before September 8, 1997.

ADDRESSES: Written objections and hearing requests, identified by the docket control number, [OPP–300511], must be submitted to: Hearing Clerk (1900), Environmental Protection Agency, Rm. M3708, 401 M St., SW., Washington, DC 20460. Fees accompanying objections and hearing requests shall be labeled ''Tolerance Petition Fees'' and forwarded to: EPA Headquarters Accounting Operations Branch, OPP (Tolerance Fees), P.O. Box 360277M, Pittsburgh, PA 15251. A copy of any objections and hearing requests filed with the Hearing Clerk identified by the docket control number, [OPP–300511], must also be submitted to: Public Information and Records Integrity Branch, Information Resources and Services Division (7506C), Office of Pesticide Programs, Environmental Protection Agency, 401 M St., SW., Washington, DC 20460. In person, bring a copy of objections and hearing requests to Rm. 1132, CM #2, 1921 Jefferson Davis Hwy., Arlington, VA.

A copy of objections and hearing requests filed with the Hearing Clerk may also be submitted electronically by sending electronic mail (e-mail) to: opp-docket@epamail.epa.gov. Copies of objections and hearing requests must be submitted as an ASCII file avoiding the use of special characters and any form of encryption. Copies of objections and hearing requests will also be accepted on disks in WordPerfect 5.1 file format or ASCII file format. All copies of objections and hearing requests in electronic form must be identified by the docket control number [OPP–300511]. No Confidential Business Information (CBI) should be submitted through e-mail. Electronic copies of objections and hearing requests on this rule may be filed online at many Federal Depository Libraries.

FOR FURTHER INFORMATION CONTACT: By mail: Andrew Ertman, Registration Division 7505C, Office of Pesticide Programs, Environmental Protection Agency, 401 M St., SW., Washington, DC 20460. Office location, telephone number, and e-mail address: Crystal Mall #2, 1921 Jefferson Davis Hwy., Arlington, VA, (703) 308-9367, e-mail: ertman.andrew@epamail.epa.gov.

SUPPLEMENTARY INFORMATION: EPA, on its own initiative, pursuant to section 408(e) and (l)(6) of the Federal Food, Drug, and Cosmetic Act (FFDCA), 21 U.S.C. 346a(e) and (l)(6), is establishing tolerances for combined residues of the insecticide imidacloprid, in or on the crop group citrus fruits at 1 part per million (ppm) and the processed commodity dried citrus pulp at 5 ppm. These tolerances will expire and are revoked on December 31, 1998. EPA will publish a document in the **Federal Register** to remove the revoked tolerances from the Code of Federal Regulations.

I. Background and Statutory Authority

The Food Quality Protection Act of 1996 (FQPA) (Pub. L. 104–170) was signed into law August 3, 1996. FQPA amends both the Federal Food, Drug, and Cosmetic Act (FFDCA), 21 U.S.C. 301 *et seq*., and the Federal Insecticide, Fungicide, and Rodenticide Act (FIFRA), 7 U.S.C. 136 *et seq* . The FQPA amendments went into effect immediately. Among other things, FQPA amends FFDCA to bring all EPA pesticide tolerance-setting activities under a new section 408 with a new safety standard and new procedures. These activities are described below and discussed in greater detail in the final rule establishing the time-limited tolerance associated with the emergency exemption for use of propiconazole on sorghum (61 FR 58135, November 13, 1996)(FRL–5572–9).

New section 408(b)(2)(A)(I) of the FFDCA allows EPA to establish a tolerance (the legal limit for a pesticide chemical residue in or on a food) only if EPA determines that the tolerance is ''safe.'' Section 408(b)(2)(A)(ii) defines ''safe'' to mean that ''there is a reasonable certainty that no harm will result from aggregate exposure to the pesticide chemical residue, including all anticipated dietary exposures and all other exposures for which there is reliable information.'' This includes exposure through drinking water and in residential settings, but does not include occupational exposure. Section 408(b)(2)(C) requires EPA to give special consideration to exposure of infants and children to the pesticide chemical residue in establishing a tolerance and to ''ensure that there is a reasonable certainty that no harm will result to infants and children from aggregate exposure to the pesticide chemical residue. . . .''

Section 18 of FIFRA authorizes EPA to exempt any Federal or State agency from any provision of FIFRA, if EPA determines that ''emergency conditions exist which require such exemption.'' This provision was not amended by FQPA. EPA has established regulations governing such emergency exemptions in 40 CFR part 166.

Section 408(l)(6) of the FFDCA requires EPA to establish a time-limited tolerance or exemption from the requirement for a tolerance for pesticide chemical residues in food that will result from the use of a pesticide under an emergency exemption granted by EPA under section 18 of FIFRA. Such tolerances can be established without providing notice or period for public comment.

Because decisions on section 18-related tolerances must proceed before EPA reaches closure on several policy issues relating to interpretation and implementation of the FQPA, EPA does not intend for its actions on such tolerance to set binding precedents for the application of section 408 and the new safety standard to other tolerances and exemptions.

II. Emergency Exemption for Imidacloprid on Citrus and FFDCA Tolerances

The State of Florida has requested a specific exemption for the use of imidacloprid on citrus for the control of

the brown citrus aphid (BrCA) and the citrus leafminer (CLM). The BrCA is a potentially devastating pest that impacts citrus by feeding on newly developing foliage and by transmitting citrus tristeza virus (CTV). The citrus leafminer, since its initial discovery in May 1993, has become a major economic pest to citrus nurseries and young citrus groves by feeding on newly developing foliage.

The Applicant asserts that CTV could potentially affect citrus yield in the following three ways: (1) threatened losses of $500 million for sweet orange and grapefruit trees budded on sour orange rootstock; (2) if CTV stem pitting strains became endemic throughout the Florida grapefruit industry, yields from grapefruit trees on CTV tolerant rootstock could be reduced by 45% on a continuing basis, fruit size would be reduced, and production costs increased; and (3) if CTV became endemic throughout Florida, yields of sweet orange would be reduced by 5-20%, and production costs increased.

As for yield losses caused by the CLM, the Applicant indicates that defoliation caused by CLM could result in up to a 44% reduction in yield, translating into a net loss of approximately $145/acre.

For the BrCA, the registered alternatives are either ineffective due to labeled use restrictions and length of efficacy or are broad spectrum insecticides that, if used as needed to control the BrCA, would dramatically upset established populations of beneficials. The registered alternatives for the CLM have not provided adequate control of this pest, with the most effective alternatives demonstrating a 14-day suppression of the CLM. Additionally, the CLM is difficult to control with foliar sprays because it is protected from foliar-applied insecticides by the mined leaf cuticle, and leaf margins role inward over the pupae, protecting it. Florida indicated that imidacloprid had demonstrated as much as 15 weeks of control, and since it is a systemic insecticide, would be particularly effective against these type of pests, due to their feeding habits.

EPA has authorized under FIFRA section 18 the use of imidacloprid on citrus for control of the brown citrus aphid and citrus leafminer in Florida. After having reviewed the submission, EPA concurs that emergency conditions exist for this state.

As part of its assessment of this emergency exemption, EPA assessed the potential risks presented by residues of imidacloprid in or on citrus fruits and dried citrus pulp. In doing so, EPA considered the new safety standard in FFDCA section 408(b)(2), and EPA decided that the necessary tolerance under FFDCA section 408(l)(6) would be consistent with the new safety standard and with FIFRA section 18. Consistent with the need to move quickly on the emergency exemption in order to address an urgent non-routine situation and to ensure that the resulting food is safe and lawful, EPA is issuing these tolerances without notice and opportunity for public comment under section 408(e), as provided in section 408(l)(6). Although these tolerances will expire and are revoked on December 31, 1998, under FFDCA section 408(l)(5), residues of the pesticide not in excess of the amounts specified in the tolerances remaining in or on citrus fruits and dried citrus pulp after that date will not be unlawful, provided the pesticide is applied in a manner that was lawful under FIFRA. EPA will take action to revoke these tolerances earlier if any experience with, scientific data on, or other relevant information on this pesticide indicate that the residues are not safe.

Because these tolerances are being approved under emergency conditions EPA has not made any decisions about whether imidacloprid meets EPA's registration requirements for use on citrus or whether permanent tolerances for this use would be appropriate. Under these circumstances, EPA does not believe that these tolerance serve as a basis for registration of imidacloprid by a State for special local needs under FIFRA section 24(c). Nor do these tolerances serve as the basis for any State other than Florida to use this pesticide on this crop under section 18 of FIFRA without following all provisions of section 18 as identified in 40 CFR part 166. For additional information regarding the emergency exemption for imidacloprid, contact the Agency's Registration Division at the address provided above.

III. Risk Assessment and Statutory Findings

EPA performs a number of analyses to determine the risks from aggregate exposure to pesticide residues. First, EPA determines the toxicity of pesticides based primarily on toxicological studies using laboratory animals. These studies address many adverse health effects, including (but not limited to) reproductive effects, developmental toxicity, toxicity to the nervous system, and carcinogenicity. Second, EPA examines exposure to the pesticide through the diet (e.g., food and drinking water) and through exposures that occur as a result of pesticide use in residential settings.

A. Toxicity

1. *Threshold and non-threshold effects.* For many animal studies, a dose response relationship can be determined, which provides a dose that causes adverse effects (threshold effects) and doses causing no observed effects (the ''no-observed effect level'' or ''NOEL'').

Once a study has been evaluated and the observed effects have been determined to be threshold effects, EPA generally divides the NOEL from the study with the lowest NOEL by an uncertainty factor (usually 100 or more) to determine the Reference Dose (RfD). The RfD is a level at or below which daily aggregate exposure over a lifetime will not pose appreciable risks to human health. An uncertainty factor (sometimes called a ''safety factor'') of 100 is commonly used since it is assumed that people may be up to 10 times more sensitive to pesticides than the test animals, and that one person or subgroup of the population (such as infants and children) could be up to 10 times more sensitive to a pesticide than another. In addition, EPA assesses the potential risks to infants and children based on the weight of the evidence of the toxicology studies and determines whether an additional uncertainty factor is warranted. Thus, an aggregate daily exposure to a pesticide residue at or below the RfD (expressed as 100% or less of the RfD) is generally considered acceptable by EPA. EPA generally uses the RfD to evaluate the chronic risks posed by pesticide exposure. For shorter term risks, EPA calculates a margin of exposure (MOE) by dividing the estimated human exposure into the NOEL from the appropriate animal study. Commonly, EPA finds MOEs lower than 100 to be unacceptable. This 100-fold MOE is based on the same rationale as the 100-fold uncertainty factor.

Lifetime feeding studies in two species of laboratory animals are conducted to screen pesticides for cancer effects. When evidence of increased cancer is noted in these studies, the Agency conducts a weight of the evidence review of all relevant toxicological data including short-term and mutagenicity studies and structure activity relationship. Once a pesticide has been classified as a potential human carcinogen, different types of risk assessments (e.g., linear low dose extrapolations or MOE calculation based on the appropriate NOEL) will be carried out based on the nature of the carcinogenic response and the Agency's knowledge of its mode of action.

2. *Differences in toxic effect due to exposure duration.* The toxicological effects of a pesticide can vary with different exposure durations. EPA considers the entire toxicity data base, and based on the effects seen for different durations and routes of exposure, determines which risk assessments should be done to assure that the public is adequately protected from any pesticide exposure scenario. Both short and long durations of exposure are always considered. Typically, risk assessments include ''acute'', ''short-term'', ''intermediate term'', and ''chronic'' risks. These assessments are defined by the Agency as follows.

Acute risk, by the Agency's definition, results from 1-day consumption of food and water, and reflects toxicity which could be expressed following a single oral exposure to the pesticide residues. High-end exposure to food and water residues are typically assumed.

Short-term risk results from exposure to the pesticide for a period of 1-7 days, and therefore overlaps with the acute risk assessment. Historically, this risk assessment was intended to address primarily dermal and inhalation exposure which could result, for example, from residential pesticide applications. However, since enaction of FQPA, this assessment has been expanded to include both dietary and non-dietary sources of exposure, and will typically consider exposure from food, water, and residential uses when reliable data are available. In this assessment, risks from average food and water exposure, and high-end residential exposure, are aggregated. High-end exposures from all 3 sources are not typically added because of the very low probability of this occurring in most cases, and because the other conservative assumptions built into the assessment assure adequate protection of public health. However, for cases in which high-end exposure can reasonably be expected from multiple sources (e.g. frequent and widespread homeowner use in a specific geographical area), multiple high-end risks will be aggregated and presented as part of the comprehensive risk assessment/characterization. Since the toxicological endpoint considered in this assessment reflects exposure over a period of at least 7 days, an additional degree of conservatism is built into the assessment; i.e., the risk assessment nominally covers 1-7 days exposure, and the toxicological endpoint/NOEL is selected to be adequate for at least 7 days of exposure. (Toxicity results at lower levels when the dosing duration is increased.)

Intermediate-term risk results from exposure for 7 days to several months. This assessment is handled in a manner similar to the short-term risk assessment.

Chronic risk assessment describes risk which could result from several months to a lifetime of exposure. For this assessment, risks are aggregated considering average exposure from all sources for representative population subgroups including infants and children.

B. Aggregate Exposure

In examining aggregate exposure, FFDCA section 408 requires that EPA take into account available and reliable information concerning exposure from the pesticide residue in the food in question, residues in other foods for which there are tolerances, residues in groundwater or surface water that is consumed as drinking water, and other non-occupational exposures through pesticide use in gardens, lawns, or buildings (residential and other indoor uses). Dietary exposure to residues of a pesticide in a food commodity are estimated by multiplying the average daily consumption of the food forms of that commodity by the tolerance level or the anticipated pesticide residue level. The Theoretical Maximum Residue Contribution (TMRC) is an estimate of the level of residues consumed daily if each food item contained pesticide residues equal to the tolerance. In evaluating food exposures, EPA takes into account varying consumption patterns of major identifiable subgroups of consumers, including infants and children. The TMRC is a ''worst case'' estimate since it is based on the assumptions that food contains pesticide residues at the tolerance level and that 100% of the crop is treated by pesticides that have established tolerances. If the TMRC exceeds the RfD or poses a lifetime cancer risk that is greater than approximately one in a million, EPA attempts to derive a more accurate exposure estimate for the pesticide by evaluating additional types of information (anticipated residue data and/or percent of crop treated data) which show, generally, that pesticide residues in most foods when they are eaten are well below established tolerances.

Percent of crop treated estimates are derived from federal and private market survey data. Typically, a range of estimates are supplied and the upper end of this range is assumed for the exposure assessment. By using this upper end estimate of percent of crop treated, the Agency is reasonably certain that exposure is not understated for any significant subpopulation group. Further, regional consumption information is taken into account through EPA's computer-based model for evaluating the exposure of significant subpopulations including several regional groups, to pesticide residues. For this pesticide, the most highly exposed population subgroup (children 1-6 years old) was not regionally based.

IV. Aggregate Risk Assessment and Determination of Safety

Consistent with section 408(b)(2)(D), EPA has reviewed the available scientific data and other relevant information in support of this action. EPA has sufficient data to assess the hazards of imidacloprid and to make a determination on aggregate exposure, consistent with section 408(b)(2), for time-limited tolerances for combined residues of imidacloprid on the citrus fruits crop group at 1 ppm and the processed commodity dried citrus pulp 5 ppm. EPA's assessment of the dietary exposures and risks associated with establishing these tolerances follows.

A. Toxicological Profile

EPA has evaluated the available toxicity data and considered its validity, completeness, and reliability as well as the relationship of the results of the studies to human risk. EPA has also considered available information concerning the variability of the sensitivities of major identifiable subgroups of consumers, including infants and children. The nature of the toxic effects caused by imidacloprid are discussed below.

1. *Acute toxicity.* NOEL = 24 mg/kg/day. The Agency recommends use of the NOEL of 24 mg/kg/day, based on decreased body weight, increased resorptions, increased abortions, and increased skeletal abnormalities at the lowest effect level (LEL) of 72 mg/kg/day, from the developmental toxicity study in rabbits. This risk assessment should evaluate acute dietary risk to females 13+ years.

2. *Short - and intermediate - term toxicity.* For short- and intermediate-term MOE calculations, the Agency determined that available data do not demonstrate that imidacloprid has dermal or inhalation toxicity potential. Therefore, short-or intermediate-term dermal and inhalation risk assessments are not required. This decision was based on the fact that no effects were observed at the highest dose level tested (0.191 mg/L) in a 28-day inhalation toxicity study in rats, and that no systemic toxicity was observed at dose

levels up to 1,000 mg/kg/day in a 21-day dermal toxicity study in rabbits.

3. *Chronic toxicity*. EPA has established the RfD for imidacloprid at 0.057 milligrams/kilogram/day (mg/kg/day). This RfD is based on a NOEL of 5.7 mg/kg/day from a 2-year feeding/carcinogenicity study in rats. An uncertainty factor of 100 was applied to take into account inter-species sensitivity and intra-species variation. The lowest observed effect level (LOEL) of 16.9 mg/kg/day was based on increased thyroid lesions in males.

4. *Carcinogenicity*. Imidacloprid has been classified as a Group E chemical, no evidence of carcinogenicity for humans, by the Agency.

B. Exposures and Risks

1. *From food and feed uses.* Tolerances have been established (40 CFR 180.472) for the combined residues of imidacloprid, in or on a variety of raw agricultural commodities. Tolerances range from 0.02 ppm in eggs to 6 ppm in cottonseed. Risk assessments were conducted by EPA to assess dietary exposures and risks from imidacloprid as follows:

i. *Acute exposure and risk*. Acute dietary risk assessments are performed for a food-use pesticide if a toxicological study has indicated the possibility of an effect of concern occurring as a result of a one day or single exposure. The acute dietary (food only) risk assessment used Theoretical Maximum Residue Contribution (TMRC). The resulting high-end exposure estimate of 0.1 mg/kg/day, which results in a dietary (food only) MOE of 240 for females 13+ years, should be viewed as a conservative risk estimate; refinement using anticipated residue values and percent crop-treated data in conjunction with Monte Carlo analysis would result in a lower acute dietary exposure estimate.

ii. *Chronic exposure and risk*. In conducting this exposure assessment, the Agency has made very conservative assumptions -- 100% of citrus commodities and all other commodities having imidacloprid tolerances will contain imidacloprid residues and those residues would be at the level of the tolerance -- which result in an overestimate of human dietary exposure. This chronic dietary (food only) exposure should be viewed as a conservative risk estimate; refinement using anticipated residue levels and percent crop-treated values analysis would result in a lower dietary exposure estimate. Thus, in making a safety determination for this tolerance, EPA is taking into account this conservative exposure assessment. The existing imidacloprid tolerances (published, pending, and including the necessary Section 18 tolerances) result in a Theoretical Maximum Residue Contribution (TMRC) that is equivalent to the following percentages of the RfD:

Subpopulation	TMRC	%RfD
U.S. population	0.011276	20%
Nursing infants	0.009403	17%
Non-nursing infants (<1 year old)	0.022489	40%
Children (1-6 years old)	0.024609	43%
Children (7-12 years old)	0.016932	30%
U.S. population - winter	0.011763	21%
Northeast Region	0.012362	22%
Western Region	0.011992	21%
Hispanics	0.012485	22%
Non-Hispanic others	0.013116	23%

The subgroups listed above are: (1) the U.S. population (48 states); (2) those for infants and children; and, (3) the other subgroups for which the percentage of the RfD occupied is greater than that occupied by the subgroup U.S. population (48 states).

2. *From drinking water.* Based on data available to the Agency, imidacloprid is persistent and could potentially leach into groundwater. There is no established Maximum Contamination Level (MCL) for residues of imidacloprid in drinking water. No health advisory levels for imidacloprid in drinking water have been established. The ''Pesticides in Groundwater Database'' has no entry for imidacloprid.

Chronic exposure and risk. Because the Agency lacks sufficient water-related exposure data to complete a comprehensive drinking water risk assessment for many pesticides, EPA has commenced and nearly completed a process to identify a reasonable yet conservative bounding figure for the potential contribution of water-related exposure to the aggregate risk posed by a pesticide. In developing the bounding figure, EPA estimated residue levels in water for a number of specific pesticides using various data sources. The Agency then applied the estimated residue levels, in conjunction with appropriate toxicological endpoints (RfDs or acute dietary NOELs) and assumptions about body weight and consumption, to calculate, for each pesticide, the increment of aggregate risk contributed by consumption of contaminated water. While EPA has not yet pinpointed the appropriate bounding figure for exposure from contaminated water, the ranges the Agency is continuing to examine are all below the level that would cause imidacloprid to exceed the RfD if the tolerance being considered in this document were granted. The Agency has therefore concluded that the potential exposures associated with imidacloprid in water, even at the higher levels the Agency is considering as a conservative upper bound, would not prevent the Agency from determining that there is a reasonable certainty of no harm if the tolerance is granted.

3. *From non-dietary exposure.* Imidacloprid is currently registered for use on the following residential non-food sites: ornamental flowering plants, ornamental ground covers, ornamental woody plants, ornamental turf, ornamental lawns, household and domestic dwellings (indoor/outdoor), wood protection, and pets. Because the Agency has determined that imidacloprid has no dermal or inhalation toxicological potential and has not identified a chronic toxicological endpoint, EPA does not expect any harm from non-dietary exposure to imidacloprid.

4. *Cumulative exposure to substances with common mechanism of toxicity.* Section 408(b)(2)(D)(v) requires that, when considering whether to establish, modify, or revoke a tolerance, the Agency consider ''available information'' concerning the cumulative effects of a particular pesticide's residues and ''other substances that have a common mechanism of toxicity.''

The Agency believes that ''available information'' in this context might include not only toxicity, chemistry, and exposure data, but also scientific policies and methodologies for understanding common mechanisms of toxicity and conducting cumulative risk assessments. For most pesticides, although the Agency has some information in its files that may turn out to be helpful in eventually determining whether a pesticide shares a common mechanism of toxicity with any other substances, EPA does not at this time have the methodologies to resolve the complex scientific issues concerning common mechanism of toxicity in a meaningful way. EPA has begun a pilot process to study this issue further through the examination of particular classes of pesticides. The Agency hopes that the results of this pilot process will increase the Agency's scientific understanding of this question such that EPA will be able to develop and apply scientific principles for better determining which chemicals have a common mechanism of toxicity and evaluating the cumulative effects of such chemicals. The Agency anticipates, however, that even as its understanding of the science of common mechanisms increases, decisions on specific classes of chemicals will be heavily dependent on chemical specific data, much of which may not be presently available.

Although at present the Agency does not know how to apply the information in its files concerning common mechanism issues to most risk assessments, there are pesticides as to which the common mechanism issues can be resolved. These pesticides include pesticides that are toxicologically dissimilar to existing chemical substances (in which case the Agency can conclude that it is unlikely that a pesticide shares a common mechanism of activity with other substances) and pesticides that produce a common toxic metabolite (in which case common mechanism of activity will be assumed).

EPA does not have, at this time, available data to determine whether imidacloprid has a common mechanism of toxicity with other substances or how to include this pesticide in a cumulative risk assessment. Unlike other pesticides for which EPA has followed a cumulative risk approach based on a common mechanism of toxicity, imidacloprid does not appear to produce a toxic metabolite produced by other substances. For the purposes of this tolerance action, therefore, EPA has not assumed that imidacloprid has a common mechanism of toxicity with other substances.

C. Aggregate Risks and Determination of Safety for U.S. Population

1. *Acute risk.* An acute aggregate risk assessment takes into account exposure from dietary food and water. For imidacloprid, no data were available to EPA from possible exposure to contaminated drinking water. Thus, this risk assessment is based on acute dietary risk from food only. For the population subgroup of concern, females 13+ years, the calculated MOE value is 240. This MOE does not exceed the Agency's level of concern for acute dietary exposure.

2. *Chronic risk.* Using the conservative exposure assumptions described above, and taking into account the completeness and reliability of the toxicity data, EPA has concluded that aggregate dietary exposure to imidacloprid will utilize 20% of the RfD for the U.S. population. EPA generally has no concern for exposures below 100% of the RfD because the RfD represents the level at or below which daily aggregate dietary exposure over a lifetime will not pose appreciable risks to human health. Despite the potential for exposure to imidacloprid in drinking water, the Agency does not expect the aggregate dietary exposure to exceed 100% of the RfD. Since EPA has determined that there is no dermal or inhalation toxicity potential for imidacloprid, non-dietary, non-occupational exposure is not a concern. The Agency concludes that there is a reasonable certainty that no harm will result from chronic aggregate exposure to imidacloprid residues.

3. *Short- and intermediate-term risk.* Short- and intermediate-term aggregate exposure takes into account chronic dietary food and water (considered to be a background exposure level) plus indoor and outdoor residential exposure. Because the Agency has determined that imidacloprid has no dermal or inhalation toxicity potential, short-term or intermediate-term dermal and inhalation risk assessments are not required.

D. Aggregate Cancer Risk for U.S. Population

Since imidacloprid has been classified as a Group E chemical, no evidence of carcinogenicity for humans, a cancer risk assessment was not required.

E. Aggregate Risks and Determination of Safety for Infants and Children

1. *Safety factor for infants and children.*—a. *In general.* In assessing the potential for additional sensitivity of infants and children to residues of imidacloprid, EPA considered data from developmental toxicity studies in the rat and rabbit and a two-generation reproduction study in the rat. The developmental toxicity studies are designed to evaluate adverse effects on the developing organism resulting from pesticide exposure during prenatal development to one or both parents. Reproduction studies provide information relating to effects from exposure to the pesticide on the reproductive capability of mating animals and data on systemic toxicity.

FFDCA section 408 provides that EPA shall apply an additional tenfold margin of safety for infants and children in the case of threshold effects to account for pre-and post-natal toxicity and the completeness of the database unless EPA determines that a different margin of safety will be safe for infants and children. Margins of safety are incorporated into EPA risk assessments either directly through use of a MOE analysis or through using uncertainty (safety) factors in calculating a dose level that poses no appreciable risk to humans. EPA believes that reliable data support using the standard MOE and uncertainty factor (usually 100 for combined inter- and intra-species variability) and not the additional tenfold MOE/uncertainty factor when EPA has a complete data base under existing guidelines and when the severity of the effect in infants or children or the potency or unusual toxic properties of a compound do not raise concerns regarding the adequacy of the standard MOE/safety factor.

b. *Developmental toxicity studies.* From the developmental toxicity study in rats, the maternal (systemic) NOEL was 30 mg/kg/day. The maternal (systemic) LOEL of 100 mg/kg/day was based on decreased weight gain. The developmental (fetal) NOEL was 30 mg/kg/day. The developmental (fetal) LEL of 100 mg/kg/day was based on increased wavy ribs.

From the developmental toxicity study in rabbits, the maternal (systemic) NOEL was 24 mg/kg/day. The maternal (systemic) LOEL of 72 mg/kg/day was based on decreased body weight, increased abortions, and death. The developmental (fetal) NOEL was 24 mg/kg/day. The developmental (fetal) LOEL of 72 mg/kg/day was based on decreased body weight and increased skeletal anomalies.

c. *Reproductive toxicity study.* From the reproductive toxicity study in rats, the maternal (systemic) NOEL was 55 mg/kg/day at the highest dose tested (HDT). The reproductive/developmental (pup) NOEL was 8 mg/kg/day. The reproductive/developmental (pup)

LOEL of 19 mg/kg/day was based on decreased pup body weight during lactation in both generations.

d. *Pre- and post-natal sensitivity.* The toxicological database for evaluating pre- and post-natal toxicity for imidacloprid is complete. In the case of the developmental toxicity studies, the developmental and maternal NOELs for both rats and rabbits occur at the same dose level for each species (24 mg/kg/day for rabbits and 30 mg/kg/day for rats) which suggests that there is no extra sensitivity for unborn children in the absence of maternal toxicity. However, a detailed analysis of the developmental toxicity studies indicates that the skeletal findings (wavy ribs and other anomalies) in both the rat and rabbit fetuses are severe effects which occurred in the presence of slight maternal toxicity (decreases of body weight). Additionally, in rabbits, there were increases in resorptions and abortions which can be attributed to acute maternal exposure. This information has been interpreted by the Agency as indicating a potential acute dietary risk for pre-natally exposed infants. The acute dietary MOE for females 13+ years is 240. This large MOE, based on conservative exposure assumptions, demonstrates that pre-natal exposure to imidacloprid is not a toxicological concern at this time.

In the case of the 2-generation reproductive toxicity study in rats, the parental NOEL is 55 mg/kg/day (HDT). The reproductive NOEL is 8 mg/kg/day based on decreased pup body weight during lactation observed at the LOEL of 19 mg/kg/day. The results of this study indicate that adverse reactions to imidacloprid by the pups occurs at levels (19 mg/kg/day) which are lower than the NOEL for the parental animals (55 mg/kg/day). Therefore, the pups are more sensitive to the effects of imidacloprid than parental animals and for the purpose of this Section 18 an additional 3X safety factor should be added to the RfD.

The aggregate risk estimate for the most highly exposed infant and children subgroup (children 1-6 years old) occupies 129% of the RfD (including the 3X additional safety factor). Both chronic and acute dietary exposure risk assessments assume 100% crop treated and use tolerance level residues for all commodities. Refinement of these dietary risk assessments by using percent crop treated information and anticipated residue data would reduce dietary exposure. Therefore, both of these risk assessments are over-estimates of dietary risk. Consideration of anticipated residues and percent crop treated would likely result in an anticipated residue contribution (ARC) which would occupy a percentage of the RfD that is likely to be significantly lower than the currently calculated TMRC value, and aggregate risk estimates. Therefore, EPA concludes that extension of this time-limited tolerance should not pose an unacceptable risk to infants and children.

2. *Acute risk.* At present, the acute dietary MOE for females 13+ years (accounts for both maternal and fetal exposure) is 240. This risk assessment also assumed 100% crop-treated with tolerance level residues on all treated crops consumed, resulting in a significant over-estimate of dietary exposure. The Agency does not expect that aggregate exposure (food plus water) would result in an unacceptable acute dietary MOE. The large acute dietary MOE calculated for females 13+ years provides assurance that there is a reasonable certainty of no harm for both females 13+ years and the pre-natal development of infants from exposure to imidacloprid.

3. *Chronic risk.* Using the conservative exposure assumptions described above, EPA has concluded that aggregate exposure to imidacloprid from food will utilize 48% of the RfD for nursing infants, and 129% of the RfD for children 1-6 years old (including the additional 3X safety factor). This chronic aggregate (food only) exposure should be viewed as a conservative risk estimate; refinement using anticipated residue levels and percent crop-treated values analysis would result in a lower aggregate exposure estimate. Despite the potential for exposure to imidacloprid in drinking water and from non-dietary, non-occupational exposure, EPA does not expect the aggregate exposure to exceed 100% of the RfD. Therefore, taking into account the completeness and reliability of the toxicity data and the conservative exposure assessment, EPA concludes that there is a reasonable certainty that no harm will result to infants and children from aggregate exposure to imidacloprid residues.

V. Other Considerations

A. Metabolism In Plants and Animals

The nature of the residue in plants and animals, is adequately understood. The residue of concern is imidacloprid and its metabolites containing the 6-chloropyridinyl moiety, all expressed as parent as specified in 40 CFR 180.472.

B. Analytical Enforcement Methodology

An adequate common moiety GC/MS enforcement method is available for the determination of the regulated imidacloprid residues in citrus commodities. Bayer Method 00200 has successfully completed an EPA Tolerance Method Validation. Copies of the method have been forwarded to FDA for publication in PAM Volume II.

C. Magnitude of Residues

Combined residues of imidacloprid and its regulated metabolites are not expected to exceed 1.0 ppm in/on the citrus crop group or 5 ppm in/on the processed commodity dried citrus pulp as a result of this Section 18 use. Secondary residues in animal commodities are not expected to exceed existing tolerances as a result of this Section 18 use.

D. International Residue Limits

There are no CODEX, Canadian, or Mexican residue limits, therefore harmonization is not an issue for this action.

E. Rotational Crop Restrictions

Citrus crops are not rotated to other crops, thus rotational crop concerns are not germane to this action.

VI. Conclusion

Therefore, tolerances are established for combined residues of imidacloprid on the citrus fruits crop group at 1 ppm and dried citrus pulp at 5 ppm.

VII. Objections and Hearing Requests

The new FFDCA section 408(g) provides essentially the same process for persons to ''object'' to a tolerance regulation issued by EPA under new section 408(e) and (l)(6) as was provided in the old section 408 and in section 409. However, the period for filing objections is 60 days, rather than 30 days. EPA currently has procedural regulations which govern the submission of objections and hearing requests. These regulations will require some modification to reflect the new law. However, until those modifications can be made, EPA will continue to use those procedural regulations with appropriate adjustments to reflect the new law.

Any person may, by September 8, 1997, file written objections to any aspect of this regulation and may also request a hearing on those objections. Objections and hearing requests must be filed with the Hearing Clerk, at the address given above (40 CFR 178.20). A copy of the objections and/or hearing requests filed with the Hearing Clerk should be submitted to the OPP docket for this rulemaking. The objections submitted must specify the provisions of the regulation deemed objectionable and the grounds for the objections (40

CFR 178.25). Each objection must be accompanied by the fee prescribed by 40 CFR 180.33(i). If a hearing is requested, the objections must include a statement of the factual issues on which a hearing is requested, the requestor's contentions on such issues, and a summary of any evidence relied upon by the requestor (40 CFR 178.27). A request for a hearing will be granted if the Administrator determines that the material submitted shows the following: There is genuine and substantial issue of fact; there is a reasonable possibility that available evidence identified by the requestor would, if established, resolve one or more of such issues in favor of the requestor, taking into account uncontested claims or facts to the contrary; and resolution of the factual issues in the manner sought by the requestor would be adequate to justify the action requested (40 CFR 178.32). Information submitted in connection with an objection or hearing request may be claimed confidential by marking any part or all of that information as Confidential Business Information (CBI). Information so marked will not be disclosed except in accordance with procedures set forth in 40 CFR part 2. A copy of the information that does not contain CBI must be submitted for inclusion in the public record. Information not marked confidential may be disclosed publicly by EPA without prior notice.

VIII. Public Docket

EPA has established a record for this rulemaking under docket control number [OPP–300511] (including any comments and data submitted electronically). A public version of this record, including printed, paper versions of electronic comments, which does not include any information claimed as CBI, is available for inspection from 8:30 a.m. to 4 p.m., Monday through Friday, excluding legal holidays. The public record is located in Room 1132 of the Public Information and Records Integrity Branch, Information Resources and Services Division (7506C), Office of Pesticide Programs, Environmental Protection Agency, Crystal Mall #2, 1921 Jefferson Davis Highway, Arlington, VA.

Electronic comments may be sent directly to EPA at:

opp-docket@epamail.epa.gov.

Electronic comments must be submitted as an ASCII file avoiding the use of special characters and any form of encryption.

The official record for this rulemaking, as well as the public version, as described above will be kept in paper form. Accordingly, EPA will transfer any copies of objections and hearing requests received electronically into printed, paper form as they are received and will place the paper copies in the official rulemaking record which will also include all comments submitted directly in writing. The official rulemaking record is the paper record maintained at the Virginia address in ''ADDRESSES'' at the beginning of this document.

IX. Regulatory Assessment Requirements

This final rule establishes tolerances under FFDCA section 408(d) in response to a petition submitted to the Agency. The Office of Management and Budget (OMB) has exempted these types of actions from review under Executive Order 12866, entitled Regulatory Planning and Review (58 FR 51735, October 4, 1993). This final rule does not contain any information collections subject to OMB approval under the Paperwork Reduction Act (PRA), 44 U.S.C. 3501 *et seq.*, or impose any enforceable duty or contain any unfunded mandate as described under Title II of the Unfunded Mandates Reform Act of 1995 (UMRA) (Pub. L. 104-4). Nor does it require any prior consultation as specified by Executive Order 12875, entitled Enhancing the Intergovernmental Partnership (58 FR 58093, October 28, 1993), or special considerations as required by Executive Order 12898, entitled Federal Actions to Address Environmental Justice in Minority Populations and Low-Income Populations (59 FR 7629, February 16, 1994), or require OMB review in accordance with Executive Order 13045, entitled Protection of Children from Environmental Health Risks and Safety Risks (62 FR 19885, April 23, 1997).

In addition, since these tolerances and exemptions that are established on the basis of a petition under FFDCA section 408 (d), such as the tolerances in this final rule, do not require the issuance of a proposed rule, the requirements of the Regulatory Flexibility Act (RFA) (5 U.S.C. 601 *et seq.*) do not apply. Nevertheless, the Agency has previously assessed whether establishing tolerances, exemptions from tolerances, raising tolerance levels or expanding exemptions might adversely impact small entities and concluded, as a generic matter, that there is no adverse economic impact. The factual basis for the Agency's generic certification for tolerance actions published on May 4, 1981 (46 FR 24950), and was provided to the Chief Counsel for Advocacy of the Small Business Administration.

X. Submission to Congress and the General Accounting Office

Under 5 U.S.C. 801(a)(1)(A), as added by the Small Business Regulatory Enforcement Fairness Act of 1996, the Agency has submitted a report containing this rule and other required information to the U.S. Senate, the U.S. House of Representatives, and the Comptroller General of the General Accounting Office prior to publication of this rule in today's **Federal Register**. This is not a ''major rule'' as defined by 5 U.S.C. 804(2).

List of Subjects in 40 CFR Part 180

Environmental protection, Administrative practice and procedure, Agricultural commodities, Pesticides and pests, Reporting and recordkeeping requirements.

Dated: June 30, 1997.

James Jones,

Acting Director, Registration Division, Office of Pesticide Programs.

Therefore, 40 CFR chapter I is amended as follows:

PART 180—[AMENDED]

1. The authority citation for part 180 continues to read as follows:

Authority : 21 U.S.C. 346a and 371.

2. In § 180.472, by adding the text of paragraph (b) to read as follows:

§ 180.472 1-[(6-Chloro-3-pyridinyl)methyl]-N-nitro-2-imidazolidinimine].

* * * * *

(b) *Section 18 emergency exemptions.* Time-limited tolerances are established for residues of the insecticide imidacloprid in connection with use of the pesticide under section 18 emergency exemptions granted by EPA. These tolerances will expire and are revoked on the dates specified in the following table.

Commodity	Parts per million	Expiration/Revocation Date
Citrus fruits crop group	1.0	December 31, 1998

Commodity	Parts per million	Expiration/Revocation Date
Dried citrus pulp	5.0	December 31, 1998

* * * * *

[FR Doc. 97–17930 Filed 7–8–97; 8:45 am]

BILLING CODE 6560–50–F

ENVIRONMENTAL PROTECTION AGENCY

40 CFR Part 281

[FRL–5854–8]

District of Columbia; Final Approval of State Underground Storage Tank Program

AGENCY: Environmental Protection Agency.

ACTION: Notice of final determination on the District of Columbia's application for program approval.

SUMMARY: The District of Columbia has applied for approval of its underground storage tank program under Subtitle I of the Resource Conservation and Recovery Act (RCRA). The Environmental Protection Agency (EPA) has reviewed the District of Columbia's application and has made a final determination that the District of Columbia's underground storage tank program satisfies all of the requirements necessary to qualify for approval. Thus, EPA is granting final approval to the District of Columbia to operate its program.

EFFECTIVE DATES: Program approval for the District of Columbia shall be effective on August 8, 1997.

FOR FURTHER INFORMATION CONTACT: Karen L. Bowen, State Programs Branch (3HW60), U.S. EPA Region III, 841 Chestnut Building, Philadelphia, Pennsylvania 19107, (215) 566–3382.

SUPPLEMENTARY INFORMATION:

A. Background

Section 9004 of the Resource Conservation and Recovery Act (RCRA) authorizes EPA to approve State underground storage tank programs to operate in the State in lieu of the Federal underground storage tank (UST) program. To qualify for approval, a State's program must be ''no less stringent'' than the Federal program in all seven elements set forth at section 9004(a) (1) through (7) of RCRA, 42 U.S.C. 6991c(a) (1) through (7), as well as the notification requirements of section 9004(a)(8) of RCRA, 42 U.S.C. 6991c(a)(8) and must provide for adequate enforcement of compliance with UST standards (section 9004(a) of RCRA, 42 U.S.C. 6991c(a)).

On October 3, 1996, the District of Columbia submitted an official application for approval to administer its underground storage tank program. On April 28, 1997, EPA published a tentative determination announcing its intent to approve the District's program. Further background on the tentative decision to grant approval appears at 62 FR 22898 (April 28, 1997).

Along with the tentative determination, EPA announced the availability of the application for public review and comment and the date of a tentative public hearing on the application and EPA's tentative determination. EPA requested advance notice for testimony and reserved the right to cancel the public hearing in the event of insufficient public interest. Since there were no requests to hold a public hearing, it was cancelled. One person provided written comments relating to the District of Columbia's regulations pertaining to heating oil tanks. The commenter felt the District's regulations are excessive for underground heating oil tanks and are not in conformance with Federal law, or that of the surrounding states and suggested that since the District of Columbia is predominantly a Federal city, it should follow the Federal UST regulations.

The District of Columbia has identified in their application that the regulation of heating oil tanks is an area where its program is broader in scope than the Federal program. The Federal underground storage tank program does not cover tanks used for storing heating oil for consumptive use on the premises where stored, and, therefore, the District of Columbia is free to regulate such tanks as it deems appropriate. Since state programs which are broader in scope than the Federal program may be approved, EPA is granting final approval to the District of Columbia's Underground Storage Tank Program.

B. Final Decision

I conclude that the District of Columbia's application for program approval meets all of the statutory and regulatory requirements established by Subtitle I of RCRA and 40 CFR part 281. Accordingly, the District of Columbia is granted approval to operate its underground storage tank program in lieu of the Federal program.

Compliance With Executive Order 12866

The Office of Management and Budget has exempted this action from the requirements of section 6 of Executive Order 12866.

Unfunded Mandates Reform Act

Title II of the Unfunded Mandates Reform Act of 1995 (UMRA), P.L. 104–4, establishes requirements for Federal agencies to assess the effects of certain regulatory actions on State, local, and tribal governments and the private sector. Under sections 202 and 205 of the UMRA, EPA generally must prepare a written statement of economic and regulatory alternatives analyses for proposed and final rules with Federal mandates, as defined by the UMRA, that may result in expenditures to State, local, and tribal governments, in the aggregate, or to the private sector, of $100 million or more in any one year. The section 202 and 205 requirements do not apply to today's action because it is not a ''Federal mandate'' and because it does not impose annual costs of $100 million or more.

Today's rule contains no Federal mandates for State, local or tribal governments or the private sector for two reasons. First, today's action does not impose new or additional enforceable duties on any State, local or tribal governments or the private sector because the requirements of the District of Columbia program are already imposed by the District of Columbia and subject to the District of Columbia law. Second, the Act also generally excludes from the definition of a ''Federal mandate'' duties that arise from participation in a voluntary Federal program. The District of Columbia's participation in an authorized UST program is voluntary.

Even if today's rule did contain a Federal mandate, this rule will not result in annual expenditures of $100 million or more for State, local, and/or tribal governments in the aggregate, or the private sector. Costs to State, local and/or tribal governments already exist under the District of Columbia program, and today's action does not impose any additional obligations on regulated entities. In fact, EPA's approval of state

programs generally may reduce, not increase, compliance costs for the private sector.

The requirements of section 203 of UMRA also do not apply to today's action. Before EPA establishes any regulatory requirements that may significantly or uniquely affect small governments, section 203 of the UMRA requires EPA to develop a small government agency plan. This rule contains no regulatory requirements that might significantly or uniquely affect small governments. The Agency recognizes that although small governments may own and/or operate USTs, they are already subject to the regulatory requirements under existing state law which are being authorized by EPA, and, thus, are not subject to any additional significant or unique requirements by virtue of this program approval.

Certification Under the Regulatory Flexibility Act

EPA has determined that this authorization will not have a significant economic impact on a substantial number of small entities. Such small entities which own and/or operate USTs are already subject to the regulatory requirements under existing State law which are being authorized by EPA. EPA's authorization does not impose any additional burdens on these small entities. This is because EPA's authorization would simply result in an administrative change, rather than a change in the substantive requirements imposed on these small entities.

Therefore, EPA provides the following certification under the Regulatory Flexibility Act, as amended by the Small Business Regulatory Enforcement Fairness Act. Pursuant to the provision at 5 U.S.C. 605(b), I hereby certify that this authorization will not have a significant economic impact on a substantial number of small entities. This authorization approves regulatory requirements under existing State law to which small entities are already subject. It does not impose any new burdens on small entities. This rule, therefore, does not require a regulatory flexibility analysis.

Submission to Congress and the General Accounting Office

Under 5 U.S.C. 801(a)(1)(A) as added by the Small Business Regulatory Enforcement Fairness Act of 1996, EPA submitted a report containing this rule and other required information to the U.S. Senate, the U.S. House of Representatives and the Comptroller General of the General Accounting Office prior to publication of the rule in today's **Federal Register**. This rule is not a ''major rule'' as defined by 5 U.S.C. 804(2).

List of Subjects in 40 CFR Part 281

Environmental protection, Administrative Practice and Procedure, Hazardous Materials, State Program Approval, and Underground Storage Tanks.

Authority: This notice is issued under the authority of Section 9004 of the Resource Conservation and Recovery Act, as amended, 42 U.S.C. 6991c.

Dated: June 27, 1997.

Rene A. Henry,

Acting Regional Administrator.

[FR Doc. 97–17956 Filed 7–8–97; 8:45 am]

BILLING CODE 6560–50–P

FEDERAL COMMUNICATIONS COMMISSION

47 CFR Part 73

[MM Docket No. 97–48; RM–8994]

Radio Broadcasting Services; Earlville, IL

AGENCY: Federal Communications Commission.

ACTION: Final rule.

SUMMARY: The Commission, at the request of Second Congregational Services, allots Channel 275A at Earlville, Illinois, as the community's first local aural transmission service. *See* 62 FR 6928, February 14, 1997. Channel 275A can be allotted at Earlville in compliance with the Commission's minimum distance separation requirements with a site restriction of 13.4 kilometers (8.3 miles) northwest to accommodate petitioner's requested site. The coordinates for Channel 275A at Earlville are North Latitude 41–38–55 and West Longitude 89–03–51. With this action, this proceeding is terminated.

DATES: Effective August 11, 1997. The window period for filing applications for Channel 275A at Earlville, Illinois, will open on August 11, 1997, and close on September 11, 1997.

FOR FURTHER INFORMATION CONTACT: Sharon P. McDonald, Mass Media Bureau, (202) 418–2180.

SUPPLEMENTARY INFORMATION: This is a synopsis of the Commission's Report and Order, MM Docket No. 97–48, adopted June 18, 1997 and released June 27, 1997. The full text of this Commission decision is available for inspection and copying during normal business hours in the FCC Reference Center (Room 239), 1919 M Street, NW., Washington, DC. The complete text of this decision may also be purchased from the Commission's copy contractors, International Transcription Service, Inc., (202) 857–3800, 2100 M Street, NW., Suite 140, Washington, DC 20037.

List of Subjects in 47 CFR Part 73

Radio broadcasting.

Part 73 of Title 47 of the Code of Federal Regulations is amended as follows:

PART 73—[AMENDED]

1. The authority citation for Part 73 continues to read as follows:

Authority: Sections 303, 48 Stat., as amended, 1082; 47 U.S.C. 154, as amended.

§ 73.202 [Amended]

2. Section 73.202(b), the Table of FM Allotments under Illinois, is amended by adding Earlville, Channel 275A.

Federal Communications Commission.

John A. Karousos,

Chief, Allocations Branch, Policy and Rules Division, Mass Media Bureau.

[FR Doc. 97–17870 Filed 7–8–97; 8:45 am]

BILLING CODE 6712–01–U

FEDERAL COMMUNICATIONS COMMISSION

47 CFR Part 73

[MM Docket No. 97–24; RM–8973]

Radio Broadcasting Services; Midwest, WY

AGENCY: Federal Communications Commission.

ACTION: Final rule.

SUMMARY: The Commission, at the request of Windy Valley Broadcasting, allots Channel 300A at Midwest, Wyoming, as the community's first local aural transmission service. *See* 62 FR 4515, January 30, 1997. Channel 300A can be allotted at Midwest in compliance with the Commission's minimum distance separation requirements at city reference coordinates. The coordinates for Channel 300A at Lexington are North Latitude 43–26–36 and West Longitude 106–16–24. With this action, this proceeding is terminated.

DATES: Effective August 11, 1997. The window period for filing applications for Channel 300A at Midwest, Wyoming, will open on August 11, 1997, and close on September 11, 1997.

FOR FURTHER INFORMATION CONTACT: Sharon P. McDonald, Mass Media Bureau, (202) 418–2180.

SUPPLEMENTARY INFORMATION: This is a synopsis of the Commission's Report and Order, MM Docket No. 97–24, adopted June 18, 1997 and released June 27, 1997. The full text of this Commission decision is available for inspection and copying during normal business hours in the FCC Reference Center (Room 239), 1919 M Street, NW., Washington, DC. The complete text of this decision may also be purchased from the Commission's copy contractors, International Transcription Service, Inc., (202) 857–3800, 2100 M Street, NW., Suite 140, Washington, DC 20037.

List of Subjects in 47 CFR Part 73

Radio broadcasting.

Part 73 of Title 47 of the Code of Federal Regulations is amended as follows:

PART 73—[AMENDED]

1. The authority citation for Part 73 continues to read as follows:

Authority: Sections 303, 48 Stat., as amended, 1082; 47 U.S.C. 154, as amended.

§ 73.202 [Amended]

2. Section 73.202(b), the Table of FM Allotments under Wyoming, is amended by adding Midwest, Channel 300A.

Federal Communications Commission.

John A. Karousos,

Chief, Allocations Branch, Policy and Rules Division, Mass Media Bureau.

[FR Doc. 97–17872 Filed 7–8–97; 8:45 am]

BILLING CODE 6712–01–U

FEDERAL COMMUNICATIONS COMMISSION

47 CFR Part 73

[MM Docket No. 96–252; RM–8959]

Radio Broadcasting Services; Gillette, WY

AGENCY: Federal Communications Commission.

ACTION: Final rule.

SUMMARY: The Commission, at the request of Montgomery Broadcasting Limited Liability Company, allots Channel 249A at Gillette, Wyoming, as the community's third local FM transmission service. *See* 61 FR 66248, December 17, 1996. Channel 249A can be allotted at Gillette in compliance with the Commission's minimum distance separation requirements without the imposition of a site restriction. The coordinates for Channel 249A at Gillette are North Latitude 44–17–36 and West Longitude 105–30–06. With this action, this proceeding is terminated.

DATES: Effective August 11, 1997. The window period for filing applications for Channel 249A at Gillette, Wyoming, will open on August 11, 1997, and close on September 11, 1997.

FOR FURTHER INFORMATION CONTACT: Sharon P. McDonald, Mass Media Bureau, (202) 418–2180.

SUPPLEMENTARY INFORMATION: This is a synopsis of the Commission's Report and Order, MM Docket No. 96–252 adopted June 18, 1997 and released June 27, 1997. The full text of this Commission decision is available for inspection and copying during normal business hours in the FCC Reference Center (Room 239), 1919 M Street, NW., Washington, DC. The complete text of this decision may also be purchased from the Commission's copy contractors, International Transcription Service, Inc., (202) 857–3800, 2100 M Street, NW., Suite 140, Washington, DC 20037.

List of Subjects in 47 CFR Part 73

Radio broadcasting.

Part 73 of Title 47 of the Code of Federal Regulations is amended as follows:

PART 73—[AMENDED]

1. The authority citation for Part 73 continues to read as follows:

Authority: Sections 303, 48 Stat., as amended, 1082; 47 U.S.C. 154, as amended.

§ 73.202 [Amended]

2. Section 73.202(b), the Table of FM Allotments under Wyoming, is amended by adding Channel 249A at Gillette.

Federal Communications Commission.

John A. Karousos,

Chief, Allocations Branch, Policy and Rules Division, Mass Media Bureau.

[FR Doc. 97–17871 Filed 7–8–97; 8:45 am]

BILLING CODE 6712–01–U

FEDERAL COMMUNICATIONS COMMISSION

47 CFR Part 73

[MM Docket No. 97–64; RM–9001]

Radio Broadcasting Services; Lexington, IL

AGENCY: Federal Communications Commission.

ACTION: Final rule.

SUMMARY: The Commission, at the request of Atlantis Broadcasting Co., L.L.C., allots Channel 258A at Lexington, Illinois, as the community's first local aural transmission service. *See* 62 FR 7981, February 21, 1997. Channel 258A can be allotted at Lexington in compliance with the Commission's minimum distance separation requirements with a site restriction of 8.1 kilometers (5.1 miles) southwest to avoid short-spacings to the licensed sites of Station WAJK(FM), Channel 257B1, LaSalle, Illinois, and Station WUSN(FM), Channel 258B, Chicago, Illinois. The coordinates for Channel 258A at Lexington are North Latitude 40–35–15 and West Longitude 88–50–39. With this action, this proceeding is terminated.

DATES: Effective August 11, 1997. The window period for filing applications for Channel 258A at Lexington, Illinois, will open on August 11, 1997, and close on September 11, 1997.

FOR FURTHER INFORMATION CONTACT: Sharon P. McDonald, Mass Media Bureau, (202) 418–2180.

SUPPLEMENTARY INFORMATION: This is a synopsis of the Commission's Report and Order, MM Docket No. 97–64, adopted June 18, 1997 and released June 27, 1997. The full text of this Commission decision is available for inspection and copying during normal business hours in the FCC Reference Center (Room 239), 1919 M Street, NW., Washington, DC. The complete text of this decision may also be purchased from the Commission's copy contractors, International Transcription Service, Inc., (202) 857–3800, 2100 M Street, NW., Suite 140, Washington, DC 20037.

List of Subjects in 47 CFR Part 73

Radio broadcasting.

Part 73 of Title 47 of the Code of Federal Regulations is amended as follows:

PART 73—[AMENDED]

1. The authority citation for Part 73 continues to read as follows:

Authority: Sections 303, 48 Stat., as amended, 1082; 47 U.S.C. 154, as amended.

§ 73.202 [Amended]

2. Section 73.202(b), the Table of FM Allotments under Illinois, is amended by adding Lexington, Channel 258A.

Federal Communications Commission.

John A. Karousos,

Chief, Allocations Branch, Policy and Rules Division, Mass Media Bureau.

[FR Doc. 97–17873 Filed 7–8–97; 8:45 am]

BILLING CODE 6712–01–U

FEDERAL COMMUNICATIONS COMMISSION

47 CFR Part 73

[MM Docket No. 97–49; RM–8993]

Radio Broadcasting Services; Cooperstown, PA

AGENCY: Federal Communications Commission.

ACTION: Final rule.

SUMMARY: The Commission, at the request of John Anthony Bulmer, allots Channel 299A at Cooperstown, Pennsylvania, as the community's first local aural transmission service. *See* 62 FR 6926, February 14, 1997. Channel 299A can be allotted at Cooperstown in compliance with the Commission's minimum distance separation requirements at city reference coordinates. The coordinates for Channel 299A at Cooperstown are North Latitude 41–29–55 and West Longitude 79–52–14. Since Cooperstown is located within 320 kilometers (200 miles) of the U.S.-Canadian border, concurrence of the Canadian government has been obtained. With this action, this proceeding is terminated.

DATES: Effective August 11, 1997. The window period for filing applications for Channel 299A at Cooperstown, Pennsylvania, will open on August 11, 1997, and close on September 11, 1997.

FOR FURTHER INFORMATION CONTACT: Sharon P. McDonald, Mass Media Bureau, (202) 418–2180.

SUPPLEMENTARY INFORMATION: This is a synopsis of the Commission's Report and Order, MM Docket No. 97–49, adopted June 18, 1997, and released June 27, 1997. The full text of this Commission decision is available for inspection and copying during normal business hours in the FCC Reference Center (Room 239), 1919 M Street, NW., Washington, DC. The complete text of this decision may also be purchased from the Commission's copy contractors, International Transcription Service, Inc., (202) 857–3800, 2100 M Street, NW., Suite 140, Washington, DC 20037.

List of Subjects in 47 CFR Part 73

Radio broadcasting.

Part 73 of Title 47 of the Code of Federal Regulations is amended as follows:

PART 73—[AMENDED]

1. The authority citation for Part 73 continues to read as follows:

Authority: Sections 303, 48 Stat., as amended, 1082; 47 U.S.C. 154, as amended.

§ 73.202 [Amended]

2. Section 73.202(b), the Table of FM Allotments under Pennsylvania, is amended by adding Cooperstown, Channel 299A.

Federal Communications Commission.

John A. Karousos,

Chief, Allocations Branch, Policy and Rules Division, Mass Media Bureau

[FR Doc. 97–17876 Filed 7–8–97; 8:45 am]

BILLING CODE 6712–01–U

FEDERAL COMMUNICATIONS COMMISSION

47 CFR Part 73

[MM Docket No. 97–101; RM–9051]

Radio Broadcasting Services; Mahnomen, MN

AGENCY: Federal Communications Commission.

ACTION: Final rule.

SUMMARY: Action in this document allots Channel 268C3 to Mahnomen, Minnesota, as that community's first local broadcast service in response to a petition filed by Jimmy D. Birkemeyer. *See* 62 FR 15871, April 3, 1997. There is a site restriction 15 kilometers (9.3 miles) northwest of the community. The coordinates for Channel 268C3 are 47–25–00 and 96–06–00. Canadian concurrence has been obtained for the allotment of Channel 268C3 at Mahnomen. With this action this proceeding is terminated.

DATES: Effective August 11, 1997. The window period for filing applications for Channel 268C3 at Mahnomen, Minnesota, will open on August 11, 1997, and close on September 11, 1997.

FOR FURTHER INFORMATION CONTACT: Kathleen Scheuerle, Mass Media Bureau, (202) 418–2180.

SUPPLEMENTARY INFORMATION: This is a summary of the Commission's Report and Order, MM Docket No. 97–101, adopted June 18, 1997, and released June 27, 1997. The full text of this Commission decision is available for inspection and copying during normal business hours in the Commission's Reference Center (Room 239), 1919 M Street, NW., Washington, DC. The complete text of this decision may also be purchased from the Commission's copy contractors, International Transcription Services, Inc., 2100 M Street, NW., Suite 140, Washington, DC. 20037, (202) 857–3800.

List of Subjects in 47 CFR Part 73

Radio broadcasting.

Part 73 of title 47 of the Code of Federal Regulations is amended as follows:

PART 73—[AMENDED]

1. The authority citation for Part 73 continues to read as follows:

Authority: Secs. 303, 48 Stat., as amended, 1082; 47 U.S.C. 154, as amended.

§ 73.202 [Amended]

2. Section 73.202(b), the Table of FM Allotments under Minnesota, is amended by adding Mahnomen, Channel 268C3.

Federal Communications Commission.

John A. Karousos,

Chief, Allocations Branch, Policy and Rules Division, Mass Media Bureau.

[FR Doc. 97–17877 Filed 7–8–97; 8:45 am]

BILLING CODE 6712–01–U

FEDERAL COMMUNICATIONS COMMISSION

47 CFR Part 73

[MM Docket No. 96–251; RM–8956]

Radio Broadcasting Services; Kingfisher, OK

AGENCY: Federal Communications Commission.

ACTION: Final rule.

SUMMARY: The Commission, at the request of Kingfisher County Broadcasting, allots Channel 287A to Kingfisher, OK, as the community's first local aural transmission service. *See* 61 FR 66249, December 17, 1996. Channel 287A can be allotted to Kingfisher in compliance with the Commission's minimum distance separation requirements with a site restriction of 9.7 kilometers (6 miles) south, at coordinates 35–46–33 North Latitude and 97–56–58 West Latitude, to avoid a short-spacing to Stations KVCS–FM, Channel 286A, Perry, OK, and KWSJ, Channel 287C, Haysville, KS. With this action, this proceeding is terminated.

DATES: Effective August 11, 1997. The window period for filing applications will open on August 11, 1997, and close on September 11, 1997.

FOR FURTHER INFORMATION CONTACT: Leslie K. Shapiro, Mass Media Bureau, 202) 418–2180.

SUPPLEMENTARY INFORMATION: This is a synopsis of the Commission's Report and Order, MM Docket No. 96–251, adopted June 18, 1997, and released June 27, 1997. The full text of this Commission decision is available for inspection and copying during normal business hours in the FCC Reference

Center (Room 239), 1919 M Street, NW., Washington, DC. The complete text of this decision may also be purchased from the Commission's copy contractor, International Transcription Services, Inc., (202) 857–3800, 2100 M Street, NW., Suite 140, Washington, DC 20037.

List of Subjects in 47 CFR Part 73

Radio broadcasting.

Part 73 of Title 47 of the Code of Federal Regulations is amended as follows:

PART 73—[AMENDED]

1. The authority citation for Part 73 continues to read as follows:

Authority: Secs. 303, 48 Stat., as amended, 1082; 47 U.S.C. 154, as amended.

§ 73.202 [Amended]

2. Section 73.202(b), the Table of FM Allotments under Oklahoma, is amended by adding Kingfisher, Channel 287A.

Federal Communications Commission.

John A. Karousos,

Chief, Allocations Branch, Policy and Rules Division, Mass Media Bureau.

[FR Doc. 97–17879 Filed 7–8–97; 8:45 am]

BILLING CODE 6712–01–U

FEDERAL COMMUNICATIONS COMMISSION

47 CFR Part 73

[MM Docket No. 97–61; RM–9010]

Radio Broadcasting Services; Superior, MT

AGENCY: Federal Communications Commission.

ACTION: Final rule.

SUMMARY: Action in this document allots Channel 298A to Superior, Montana, as that community's first local broadcast service in response to a petition filed by Mountain Tower Broadcasting. *See* 62 FR 7984, February 21, 1997. The coordinates for Channel 298A at Superior are 47–11–30 and 114–53–18. Canadian concurrence has been obtained for this allotment. With this action, this proceeding is terminated.

DATES: Effective August 11, 1997. The window period for filing applications for Channel 298A at Superior, Montana, will open on August 11, 1997, and close on September 11, 1997.

FOR FURTHER INFORMATION CONTACT: Kathleen Scheuerle, Mass Media Bureau, (202) 418–2180.

SUPPLEMENTARY INFORMATION: This is a summary of the Commission's Report and Order, MM Docket No. 97–61, adopted June 18, 1997, and released June 27, 1997. The full text of this Commission decision is available for inspection and copying during normal business hours in the Commission's Reference Center (Room 239), 1919 M Street, NW., Washington, DC. The complete text of this decision may also be purchased from the Commission's copy contractors, International Transcription Services, Inc., 2100 M Street, NW., Suite 140, Washington, DC. 20037, (202) 857–3800.

List of Subjects in 47 CFR Part 73

Radio broadcasting.

Part 73 of title 47 of the Code of Federal Regulations is amended as follows:

PART 73—[AMENDED]

1. The authority citation for Part 73 continues to read as follows:

Authority: Secs. 303, 48 Stat., as amended, 1082; 47 U.S.C. 154, as amended.

§ 73.202 [Amended]

2. Section 73.202(b), the Table of FM Allotments under Montana, is amended by adding Superior, Channel 298A.

Federal Communications Commission.

John A. Karousos,

Chief, Allocations Branch, Policy and Rules Division, Mass Media Bureau.

[FR Doc. 97–17880 Filed 7–8–97; 8:45 am]

BILLING CODE 6712–01–U

FEDERAL COMMUNICATIONS COMMISSION

47 CFR Part 73

[MM Docket No. 97–73; RM–9012 and RM–9063]

Radio Broadcasting Services; Snow Hill, MD and Chincoteague, MD

AGENCY: Federal Communications Commission.

ACTION: Final rule.

SUMMARY: Action in this document allots Channel 266A to Snow Hill, Maryland, as that community's first local FM broadcast service in response to a proposal filed by James D. Sleeman. *See* 62 FR 9409, March 3, 1997. There is a site restriction 6.9 kilometers (4.3 miles) east of the community. The coordinates for Channel 266A at Snow Hill, Maryland, are 38–09–17 and 75–19–17. In response to a counterproposal filed by Gregory S. Bojko, we shall allot Channel 243A to Chincoteague, Virginia. The coordinates for Channel 243A at Chincoteague are 37–56–00 and 75–22–36. With this action, this proceeding is terminated.

DATES: Effective August 11, 1997. The window period for filing applications for Channel 266A at Snow Hill, Maryland, and Channel 243A at Chincoteague, Virginia, will open on August 11, 1997, and close on September 11, 1997.

FOR FURTHER INFORMATION CONTACT: Kathleen Scheuerle, Mass Media Bureau, (202) 418–2180.

SUPPLEMENTARY INFORMATION: This is a summary of the Commission's Report and Order, MM Docket No. 97–73, adopted June 18, 1997, and released June 27, 1997. The full text of this Commission decision is available for inspection and copying during normal business hours in the Commission's Reference Center (Room 239), 1919 M Street, NW., Washington, DC. The complete text of this decision may also be purchased from the Commission's copy contractors, International Transcription Services, Inc., 2100 M Street, NW., Suite 140, Washington, DC. 20037, (202) 857–3800.

List of Subjects in 47 CFR Part 73

Radio broadcasting.

Part 73 of title 47 of the Code of Federal Regulations is amended as follows:

PART 73—[AMENDED]

1. The authority citation for Part 73 continues to read as follows:

Authority: Secs. 303, 48 Stat., as amended, 1082; 47 U.S.C. 154, as amended.

§ 73.202 [Amended]

2. Section 73.202(b), the Table of FM Allotments under Maryland, is amended by adding Snow Hill, Channel 266A.

3. Section 73.202(b), the Table of FM Allotments under Virginia, is amended by adding Chincoteague, Channel 243A.

Federal Communications Commission.

John A. Karousos,

Chief, Allocations Branch, Policy and Rules Division, Mass Media Bureau.

[FR Doc. 97–17881 Filed 7–8–97; 8:45 am]

BILLING CODE 6712–01–U

FEDERAL COMMUNICATIONS COMMISSION

47 CFR Part 73

[MM Docket No. 96–216; RM–8895]

Radio Broadcasting Services; Portsmouth, OH

AGENCY: Federal Communications Commission.

ACTION: Final rule.

SUMMARY: The Commission, at the request of Peter L. Cea, allots Channel 298A to Portsmouth, OH, as the community's third local commercial FM service. *See* 61 FR 57360, November 6, 1996. Channel 298A can be allotted to Portsmouth in compliance with the Commission's minimum distance separation requirements, without the imposition of a site restriction, at coordinates 38–44–00 North Latitude; 82–59–56 West Longitude. With this action, this proceeding is terminated.

DATES: Effective August 11, 1997. The window period for filing applications will open on August 11, 1997, and close on September 11, 1997.

FOR FURTHER INFORMATION CONTACT: Leslie K. Shapiro, Mass Media Bureau, (202) 418–2180.

SUPPLEMENTARY INFORMATION: This is a synopsis of the Commission's Report and Order, MM Docket No. 96–216, adopted June 18, 1997, and released June 27, 1997. The full text of this Commission decision is available for inspection and copying during normal business hours in the FCC Reference Center (Room 239), 1919 M Street, NW., Washington, DC. The complete text of this decision may also be purchased from the Commission's copy contractor, International Transcription Services, Inc., (202) 857–3800, 2100 M Street, NW., Suite 140, Washington, DC 20037.

List of Subjects in 47 CFR Part 73

Radio broadcasting.

Part 73 of Title 47 of the Code of Federal Regulations is amended as follows:

PART 73—[AMENDED]

1. The authority citation for Part 73 continues to read as follows:

Authority: Secs. 303, 48 Stat., as amended, 1082; 47 U.S.C. 154, as amended.

§ 73.202 [Amended]

2. Section 73.202(b), the Table of FM Allotments under Ohio, is amended by adding Channel 298A at Portsmouth.

Federal Communications Commission.

John A. Karousos,

Chief, Allocations Branch, Policy and Rules Division, Mass Media Bureau.

[FR Doc. 97–17883 Filed 7–8–97; 8:45 am]

BILLING CODE 6712–01–P

FEDERAL COMMUNICATIONS COMMISSION

47 CFR Part 73

[MM Docket No. 97–63; RM–9000]

Radio Broadcasting Services; Greenwood, AR

AGENCY: Federal Communications Commission.

ACTION: Final rule.

SUMMARY: This document allots Channel 268A to Greenwood, Arkansas, as that community's second local FM transmission service in response to a petition filed by Fred R. Morton, Jr. *See* 62 FR 7980, February 21, 1997. Coordinates used for Channel 268A at Greenwood are 35–12–54 and 94–15–30. With this action, the proceeding is terminated.

DATES: Effective August 11, 1997. The window period for filing applications for Channel 268A at Greenwood, Arkansas, will open on August 11, 1997, and close on September 11, 1997.

FOR FURTHER INFORMATION CONTACT: Nancy Joyner, Mass Media Bureau, (202) 418–2180. Questions related to the window application filing process for Channel 268A at Greenwood, Arkansas, should be addressed to the Audio Services Division, (202) 418–2700.

SUPPLEMENTARY INFORMATION: This is a synopsis of the Commission's Report and Order, MM Docket No. 97–63, adopted June 18, 1997, and released June 27, 1997. The full text of this Commission decision is available for inspection and copying during normal business hours in the FCC's Reference Center (Room 239), 1919 M Street, NW., Washington, DC. The complete text of this decision may also be purchased from the Commission's copy contractors, International Transcription Service, Inc., 2100 M Street, NW., Suite 140, Washington, DC 20037, (202) 857–3800.

List of Subjects in 47 CFR Part 73

Radio broadcasting.

Part 73 of Title 47 of the Code of Federal Regulations is amended as follows:

PART 73—[AMENDED]

1. The authority citation for Part 73 continues to read as follows:

Authority: Secs. 303, 48 Stat., as amended, 1082; 47 U.S.C. 154, as amended.

§ 73.202 [Amended]

2. Section 73.202(b), the Table of FM Allotments under Arkansas, is amended by adding Channel 268A at Greenwood.

Federal Communications Commission.

John A. Karousos,

Chief, Allocations Branch, Policy and Rules Division, Mass Media Bureau.

[FR Doc. 97–17886 Filed 7–8–97; 8:45 am]

BILLING CODE 6712–01–P

FEDERAL COMMUNICATIONS COMMISSION

47 CFR Part 73

[MM Docket No. 97–17; RM–8942]

Radio Broadcasting Services; Steamboat Springs, CO

AGENCY: Federal Communications Commission.

ACTION: Final rule.

SUMMARY: This document allots Channel 255A to Steamboat Springs, Colorado, as that community's second local FM service in response to a petition filed on behalf of Alpine Broadcasting Company. *See* 62 FR 3853, January 27, 1997. Coordinates used for Channel 255A at Steamboat Springs are 40–29–12 and 106–49–54. With this action, the proceeding is terminated.

DATES: Effective August 11, 1997. The window period for filing applications for Channel 255A at Steamboat Springs, Colorado, will open on August 11, 1997, and close on September 11, 1997.

FOR FURTHER INFORMATION CONTACT: Nancy Joyner, Mass Media Bureau, (202) 418–2180. Questions related to the window application filing process for Channel 255A at Steamboat Springs, Colorado, should be addressed to the Audio Services Division, (202) 418–2700.

SUPPLEMENTARY INFORMATION: This is a synopsis of the Commission's Report and Order, MM Docket No. 97–17, adopted June 18, 1997, and released June 27, 1997. The full text of this Commission decision is available for inspection and copying during normal business hours in the FCC's Reference Center (Room 239), 1919 M Street, NW., Washington, DC. The complete text of this decision may also be purchased from the Commission's copy contractors, International Transcription Service, Inc., 2100 M Street, NW., Suite 140, Washington, DC 20037, (202) 857–3800.

List of Subjects in 47 CFR Part 73

Radio broadcasting.

Part 73 of Title 47 of the Code of Federal Regulations is amended as follows:

PART 73—[AMENDED]

1. The authority citation for Part 73 continues to read as follows:

Authority: Secs. 303, 48 Stat., as amended, 1082; 47 U.S.C. 154, as amended.

§ 73.202 [Amended]

2. Section 73.202(b), the Table of FM Allotments under Colorado, is amended by adding Channel 255A at Steamboat Springs.

Federal Communications Commission.

John A. Karousos,

Chief, Allocations Branch, Policy and Rules Division, Mass Media Bureau.

[FR Doc. 97–17885 Filed 7–8–97; 8:45 am]

BILLING CODE 6712–01–P

NATIONAL AERONAUTICS AND SPACE ADMINISTRATION

48 CFR Parts 1803, 1804, 1807, 1809, 1813, 1815, 1816, 1819, 1822, 1824, 1825, 1827, 1832, 1836, 1837, 1839, 1842, 1844, 1845, 1852, 1853, and 1870

Rewrite of the NASA Far Supplement (NFS)

AGENCY: Office of Procurement, National Aeronautics and Space Administration (NASA).

ACTION: Final rule.

SUMMARY: In order to streamline and clarify our regulations, parts 1813, 1819, 1825, 1827, 1845, and 1853, and clauses affected by these parts are revised in their entirety. Also included in this final rule are changes to 1803, 1804, 1807, 1815, 1816, 1822, 1824, 1832, 1836, 1837, 1839, 1842, and 1852 to reflect the impact of the rewritten parts, correct editorial errors, and accommodate changes to relate coverage in the Federal Acquisition Regulation (FAR).

EFFECTIVE DATE: July 9, 1997.

FOR FURTHER INFORMATION CONTACT: Tom O'Toole, (202) 358–0847.

SUPPLEMENTARY INFORMATION:

Background

The National Performance Review urged agencies to streamline and clarify their regulations. The NFS rewrite initiative was established to pursue these goals by conducting a section by section review of the NFS to verity its accuracy, relevancy, and validity. The NFS will be rewritten in blocks of parts. Upon completion of all parts, the NFS will be reissued in a new edition.

Impact

NASA certifies that this regulation will not have a significant impact on a substantial number of small entities under the Regulatory Flexibility Act (5 U.S.C. 601 *et seq.*). This rule does not impose any reporting or record keeping requirements subject to the Paperwork Reduction Act.

List of Subjects in 48 CFR Parts 1803, 1804, 1807, 1809, 1813, 1815, 1816, 1819, 1822, 1824, 1825, 1827 1832, 1836, 1837, 1839, 1842, 1844, 1845, 1852, 1853, and 1870

Government procurement.

Tom Luedtke,

Deputy Associate Administrator for Procurement.

Accordingly, 48 CFR Parts 1803, 1804, 1807, 1809, 1813, 1815, 1816, 1819, 1822, 1824, 1925, 1827 1832, 1836, 1837, 1839, 1842, 1844, 1845, 1852, 1853, and 1870 are amended as follows.

1. The authority citation for 48 CFR parts 1803, 1804, 1807, 1809, 1813, 1815, 1816, 1819, 1822, 1824, 1825, 1827, 1832, 1836, 1837, 1839, 1842, 1844, 1845, 1852, 1853, and 1870 continues to read as follows:

Authority: 42 U.S.C. 2473(c)(1).

PART 1803—IMPROPER BUSINESS PRACTICES AND PERSONAL CONFLICTS OF INTEREST

1803.104 [Revised]

(2). Section 1803.104 is revised to read as follows:

1803.104 Procurement integrity.

1803.104–3 Definitions.

Agency ethics official means for Headquarters, the General Counsel and the Associate General Counsel for General Law, and for each center, the Chief Counsel.

1803.104–5 Disclosure, protection, and marking of proprietary and source selection information. (NASA supplements paragraphs (a) and (c))

(a) Government employees serving in the following positions are authorized access to proprietary or source selection information, but only to the extent necessary to perform their official duties:

(i) Personnel participating in source evaluation board (SEB) procedures (see 1815.612.70) or personnel evaluating an offeror's or bidder's technical or cost proposal under other competitive procedures and personnel evaluating protests.

(ii) Personnel assigned to the contracting office.

(iii) The initiator of the procurement request (to include the official having principal technical cognizance over the requirement).

(iv) Small business specialists.

(v) Personnel assigned to counsel's office.

(vi) Personnel assigned to the Defense Contract Audit Agency and contract administration offices of the Department of Defense.

(vii) Personnel responsible for the review and approval of documents in accordance with the Master Buy Plan Procedure in Subpart 1807.71.

(viii) Other Government employees authorized by the contracting officer.

(ix) Supervisors, at any level, of the personnel listed in paragraphs 1803.104–5(a) (i) through (viii).

(x) Duly designated ombudsman.

(c)(i) The originator of information that may be source selection information shall consult with the contracting officer or the procurement officer, who shall determine whether the information is source selection information. NASA personnel responsible for preparing source selection information as defined in FAR 3.104–3 shall assure that the material is marked with the legend in FAR 3.104–5(c) at the time the material is prepared.

(ii) Unless marked with the legend ''SOURCE SELECTION INFORMATION—SEE FAR 3.104,'' draft specifications, purchase descriptions, and statements of work are not considered source selection information and may be released during a market survey in order to determine the capabilities of potential competitive sources (see FAR Subpart 7.1). All documents, once released, must remain available to the public until the conclusion of the acquisition.

1803.104–10 Violations or possible violations. (NASA supplements paragraphs (a), (b) and (f))

(a)(1) The Procurement Officer is the individual designated to receive the contracting officer's report of violations.

(b) The head of the contracting activity (HCA) or designee shall refer all information describing an actual or possible violation to the installation's counsel and inspector general staff and to the Associate Administrator for Procurement (Code HS).

(f) When the HCA or designee determines that award is justified by urgent and compelling circumstances or is otherwise in the interest of the Government, then that official shall submit a copy of the determination to the Associate Administrator for Procurement (Code HS) simultaneous with transmittal to the Administrator.

PART 1804—ADMINISTRATIVE MATTERS

1804.470–3 [Redesignated]

3. Section 1804.470–3 is redesignated as section 1804.470–4, and a new section 1804.470–3 is added to read as follows:

1804.470–3 Security Plan for Unclassified Federal Information Technology Systems.

When considered appropriate for contract performance, the contracting officer, with the concurrence of the requiring activity and the center automated information security (AIS) manager, may require the contractor to submit for post-award Government approval a detailed Security Plan for Unclassified Federal Information Technology Systems. The plan shall be required as a contract data deliverable that will be subsequently incorporated into the contract as a compliance document after Government approval. The plan shall demonstrate thorough understanding of NMI 2410.7 and NHB 2410.9, and shall include, as a minimum, the security measures and program safeguards to ensure that the information technology resources acquired and used by contractor and subcontractor personnel:

(a) Operate effectively and accurately;

(b) Are protected from unauthorized alteration, disclosure, or misuse of information processed, stored, or transmitted;

(c) Can maintain the continuity of automated information support for Government missions, programs, and functions;

(d) Incorporate management, general, and application controls sufficient to provide cost-effective assurance of the system's integrity and accuracy; and

(e) Have appropriate technical, personnel, administrative, environmental, and access safeguards.

PART 1807—ACQUISITION PLANNING

4. In section 1807.105 a new paragraph (b)(1) is added to read as follows:

1807.105 Contents of written acquisition plans. (NASA supplements paragraphs (a) and (b))

* * * * *

(b)(1) If the acquisition represents a consolidation of efforts previously contracted for separately, address the reasons for the consolidation, the expected benefits, and any potential adverse impact (including the effect on small, small disadvantaged, and women-owned small business participation) and planned actions to mitigate the impact (see (1819.202–170).

* * * * *

1807.70 [Added]

5. Subpart 1807.70 is added to read as follows:

Subpart 1807.70—Consolidated Contracting

1807.7000 General.

The Consolidated Contracting Initiative (CCI) is NASA's commitment to the cooperative creation and utilization of contracts, whenever practicable, to meet common Agency needs. CCI aims at improving acquisition efficiency by identifying and logically combining similar requirements. Complete information on the initiative, with its implementation guidance, is available on the Internet (http://msfcinfo.msfc.nasa.gov/cci/first.html).

PART 1809—CONTRACTOR QUALIFICATIONS

1809.106–3 [Amended]

6. In paragraph (a) to section 1809.106–3, the designation ''(a)'' is removed.

7. Part 1813 is revised to read as follows:

PART 1813—SIMPLIFIED ACQUISITION PROCEDURES

Sec.
1813.000 Scope of part.

Subpart 1813.1—General.

1813.103 Policy.
1813.106–2 Purchases exceeding the micro-purchase threshold.

Subpart 1813.2—Blanket Purchase Agreements

1813.202 Establishment of blanket purchase agreements (BPAs).

Subpart 1813.5—Purchase Orders

1813.501 General.
1813.501–70 Purchase orders under section 8(a) of the Small Business Act.
1813.505 Purchase order and related forms.

Subpart 1813.70—Governmentwide Commercial Purchase Card

1813.7000 General.
1813.7001 Cardholders.
1813.7002 Purchase card documentation.
1813.7003 Approving official.
1813.7004 Program officials.

Authority: 42 U.S.C. 2473(c)(1).

1813.000 Scope of part.

FAR Part 13 and 1813 do not apply to NASA Research Announcements and Announcements of Opportunity. These acquisitions shall be conducted in accordance with the procedures in 1835.016–70 and 1872, respectively.

Subpart 1813.1—General

1813.103 Policy. (NASA supplements paragraphs (e), (f), and (j))

(e) Except for purchases authorized by 1813.103(f), the Governmentwide commercial purchase card may be used for purchases of $25,000 or less. Purchases above the micro-purchase threshold shall comply with all applicable statutory and regulatory requirements, including the following:

(i) Small business set-aside (see FAR 13.105).

(ii) Representations and certifications. The applicable items from the provision at FAR 52.212–3, Offeror Representations and Certifications—Commercial Items shall be obtained for commercial or noncommercial purchases. This information may be obtained orally from vendors.

(iii) Maximum practicable competition (see FAR 13.106–2(a)(3)).

(iv) Implementation of the applicable contract clauses. This requirement may be satisfied by forwarding a completed SF 1449, appropriately modified to reflect purchase card terms, to the awardee after placing the order via the card, provided that the awardee must be notified of, and agree to, the applicability of the SF 1449 clauses when the order is placed.

(f) For purchases up to the simplified acquisition threshold, the Governmentwide commercial purchase card may be used to order and pay for purchases under FAR Part 8 procedures and under the contracts listed in FAR 13.103(f).

(j) Fixed-price purchase orders shall be used for all awards made under simplified acquisition procedures except as provided under the unpriced purchase order method in FAR 13.502.

1813.106–2 Purchases exceeding the micro-purchase threshold. (NASA supplements paragraph (d))

(d)(2) For purchases up to $50,000, documentation shall be limited to a brief notation in the file indicating the rationale for selecting other than the lowest priced offer.

Subpart 1813.2—Blanket Purchase Agreements

1813.202 Establishment of blanket purchase agreements (BPAs). (NASA supplements paragraph (e))

(e)(1)(v) Non-GS–1102 or –1105 personnel shall not be authorized to place individual orders under a BPA in an amount greater than $5,000.

Subpart 1813.5—Purchase Orders

1813.501 General. (NASA supplements paragraph (a))

(a) See 1813.103(j).

1813.501–70 Purchase orders under section 8(a) of the Small Business Act.

Fixed-price purchase orders made using simplified acquisition procedures are authorized for 8(a) acquisitions under the simplified acquisition threshold.

1813.505 Purchase order and related forms. (NASA supplements paragraphs (a) and (b))

(a)(2) Installations may use locally prescribed forms.

(3) Installations may use locally prescribed forms.

(b)(1)(i) The SF 44 may be used for purchases of aviation fuel and oil of $10,000 or less.

Subpart 1813.70—Governmentwide Commercial Purchase Card

1813.7000 General.

The General Services Administration (GSA) manages the Governmentwide commercial purchase card program. Purchases made with the card shall comply with the instructions and procedures issued by GSA as well as the applicable parts of the FAR and the NFS. Centers shall establish and maintain the administrative procedures and management controls required by GSA.

1813.7001 Cardholders.

(a) The procurement officer shall designate individual cardholders in accordance with center procedures, subject to the following limitations:

(1) Cardholders for purchases greater than $2,500 shall be contracting officers appointed in accordance with FAR 1.6 and 1801.603.

(2) Personnel other than contracting officers may be designated as cardholders for purchases of $2,500 or less provided they complete training adequate to ensure appropriate use of the purchase card.

(b) The procurement officer's designation shall be in writing and shall specify the scope of the cardholder's authority.

1813.7002 Purchase card documentation.

Documentation of purchases shall be minimized. For transactions below the mirco-purchase threshold, the card holder shall maintain a brief log of purchases and a file of monthly purchase card statements indicating whether item receipt has occurred. For purchases above the micro-purchase threshold, see 1813.106–2(d)(2).

1813.7003 Approving official.

The approving official is the individual who reviews and approves a chardholder's monthly statement of purchases. The approving official shall be the cardholder's immediate or higher level supervisor; in no case shall cardholders approve their own purchases. Unless center procedures otherwise provide for their designation, the procurement officer shall designate approving officials.

1813.7004 Program officials.

(a) The Headquarters Office of Procurement (Code HC) is the agency program coordinator.

(b) The procurement officer shall identify the center program coordinator and the center billing office point of contract, and provide their names to the agency program coordinator.

PART 1815—CONTRACTING BY NEGOTIATION

8–9. In section 1815–508–70 the following sentence is added to the end to read as follows:

1815.508–70 NASA prohibitions.

* * * Any other disclosure of such information concerning trade secrets, processes, operations, style of work, apparatus, and other matters, except as authorized by law, may result in criminal penalties under 18 U.S.C. 1905.

1815.611 [Amended]

10. In paragraph (d)(iii) to section 1815.611, the citation ''1815.1004–70'' is revised to read ''1815.1006–70'', and in the last sentence, the phrase ''to use in debriefing unsuccessful offerors'' is revised to read ''to use in postaward debriefing of unsuccessful offerors''.

1815.804–1 [Amended]

11. In section 1815.804–1, paragraph (b)(2)(iii) is removed.

1815.805–5 [Amended]

12. In section 1815.805–5, a new paragraph (a)(1)(E) is added to read as follows:

1815.805.–5 Field pricing support.

(a)(1)(A) * * *

* * * * *

(E) Requests for field pricing assistance may be made on NASA Form 1434, Letter of Request for Pricing-Audit-Technical Evaluation Services.

1815.1003 [Redesignated]

13. Section 1815.1003 is redesignated as section 1815.1004.

1815.1004 [Amended]

14. In the introductory text to the newly designated section 1815.1004, the citation ''FAR 15.1003'' is revised to read ''FAR 15.1004''.

1815.1004–70 [Redesignated]

15. Section 1815.1004–70 is redesignated as section 1815.1006–70, and the heading is revised to read ''Debriefing of offerors—Major System acquisitions''.

1815.1006 [Added]

16. Section 1815.1006 is added to read as follows:

1815.1006 Postaward debriefing offerors.

PART 1816—TYPES OF CONTRACTS

1816.404, 1816.404–2, 1816.404–270, 1816.404–271, 1816.404–272, 1816.404–273, 1816.404–274, 1816.404–275, 1816.405, 1816.405–70 [Redesignated]

17–18. The following sections are redesignated as follows:

Section	Redesignation
1816.404	1816.405
1816.404–2	1816.405–2
1816.404–270	1816.405–270
1816.404–271	1816.405–271
1816.404–272	1816.405–272
1816.404–273	1816.405–273
1816.404–274	1816.405–274
1816.404–275	1816.405–275
1816.405	1816.406
1816.405–70	1816.406–70

19. Paragraph (b)(2)(iii) of the newly designated section 1816.405–270 is revised to read as follows:

1816.405–270 CPAF contracts.

(a) * * *

(b) * * *

(2) * * *

(iii) Under a performance-based contract when it is determined to be necessary to motivate the contractor toward exceptional performance (see FAR 16.405–2(b)(ii)) and the increased level of performance justifies the additional administrative expense. When an award fee incentive is used in this instance, the basic contract type shall be other than CPAF (e.g., CPIF or FPIF). The potential award fee shall not be used to incentivize cost performance.

* * * * *

1816.405–271 [Amended]

20. In paragraph (a) to the newly redesignated section 1816.405–271, the citation ''1816.404–273(a)'' is revised to read ''1816.405–273(a)'', and in paragraph (b), the citations ''1816.404–273'' and ''1816.404–275'' are revised to

read ''1816.405–273'' and ''1816.405–275'', respectively.

1816.405–273 [Amended]

21. In paragraph (c) to the newly redesignated section 1816.405–273, the citation ''1816.404–275'' is revised to read ''1816.405–275'', and a new paragraph (e) is added to read as follows:

1816.405–273 Award fee evaluation.

* * * * *

(e) Interim and final evaluations may be used to provide past performance information during the source selection process and should be marked and controlled as ''Source Selection Information.''

1816.405–274 [Amended]

22. In paragraph (d)(2) to the newly redesignated section 1816.405–274, the citations ''1816.404–275'' and ''1816.404–274(d)(3)'' are revised to read ''1816.405–275'' and ''1816.405–274(d)(3)'', respectively; in paragraph (e), the citation ''1816.404–270(b)(2)(iii)'' is revised to read ''1816.405–270(b)(2)(iii)''; the designated paragraphs (f) and (g) are redesignated as paragraphs (g) and (h); and a new paragraph (f) is added to read as follows:

1816.405–274 Award fee evaluation factors.

* * * * *

(f) The contractor's performance against the subcontracting plan incorporated in the contract shall also be evaluated. Small disadvantaged business utilization may be an area of particular emphasis, including the contractor's achievements in subcontracting high technology efforts as well as the contractor's performance under the Mentor-Protégé Program, if applicable. The evaluation weight given to subcontracting plan performance should be significant (up to 15 percent of available award fee). It should motivate the contractor to focus management attention to subcontracting with small, small disadvantaged, and women-owned small business concerns to the maximum extent practicable consistent with efficient contract performance.

1816.405–275 [Amended]

23. In paragraph (d) to the newly redesignated section 1816.405–275, the citation ''1816.404–275(b)'' is revised to read ''1816.405–275(b)''.

1816.406–70 [Amended]

24. In paragraphs (a) and (b) to the newly redesignated section 1816.406–70, the citation ''FAR 16.405(e)'' is revised to read ''FAR 16.406(e)''.

25–28. Part 1819 is revised to read as follows:

PART 1819—SMALL BUSINESS PROGRAMS

Sec.
1819.001 Definitions.

Subpart 1819.2—Policies

1819.201 General policy.
1819.202 Specific policies.
1819.202–1 Encouraging small business participation in acquisitions.
1819.202–170 Contract consolidations.

Subpart 1819.3—Determination of Status as a Small Business Concern

1819.302 Protesting a small business representation.

Subpart 1819.5—Set-Asides for Small Business

1819.502 Setting aside acquisitions.
1819.502–70 Non-initiation of set-asides.
1819.502–3 Partial set-asides.
1819.502–370 NASA reporting requirements.
1819.505 Rejecting Small Business Administration recommendations.
1819.506 Withdrawing or modifying set-asides.

Subpart 1819.6—Certificates of Competency

1819.602 Procedures.
1819.602–1 Referral.
1819.602–3 Resolving differences between the agency and the Small Business Administration.
1819.602–370 NASA procedures.

Subpart 1819.7—Subcontracting with Small Business, Small Disadvantaged Business and Women-Owned Small Business and Women-Owned Small business Concerns

1819.705–2 Determining the need for a subcontracting plan.
1819.705–4 Reviewing the subcontracting plan.
1819.705–470 Acquisition-specific subcontracting goals.
1819.708 Solicitation provisions and contract clauses.
1819.708–70 NASA solicitation provision and contract clause.

Subpart 1819.8—Contracting With the Small Business Administration (the 8(a) Program)

1819.804 Evaluation, offering, and acceptance.
1819.804–1 Agency evaluation.

Subpart 1819.10—Small Business Competitiveness Demonstration Program

1819.1005 Applicability.

Subpart 1819.70—NASA 8 Percent Goal

1819.7000 General.
1819.7001 Definitions.
1819.7002 Contracting officer responsibility.
1819.7003 Contract clause.

Subpart 1819.71—NASA Rural Area Small Business Plan

1819.7101 Definition.
1819.7102 General.
1819.7103 Solicitation provision and contract clause.

Subpart 1819.72—NASA Mentor-Protégé Program

1819.7201 Scope of subpart.
1819.7202 Definitions.
1819.7203 Non-affiliation.
1819.7204 Transportatibility of features from the Department of Defense (DOD) Mentor-Protégé program to NASA contractors.
1819.7205 General policy.
1819.7206 Incentives for prime contractor participation.
1819.7207 Measurement of Program success.
1819.7208 Mentor firms.
1819.7209 Protégé firms.
1819.7210 Selection of protégé firms.
1819.7211 Application process for mentor firms to participate in the Program.
1819.7212 OSDBU review and approval process of agreement.
1819.7213 Agreement contents.
1819.7214 Developmental assistance.
1819.7215 Obligation.
1819.7216 Internal controls.
1819.7217 Reports.
1819.7218 Program review.
1819.7219 Solicitation provision and contract clauses.

Authority: 42 U.S.C. 2473(c)(1).

1819.001 Definitions.

High-Tech as used in this part means research and/or development efforts that are within or advance the state-of-the-art in a technology discipline and are performed primarily by professional engineers, scientists, and highly skilled and trained technicians or specialists.

Subpart 1819.2—Policies

1819.201 General policy. (NASA supplements paragraphs (a), (c), and (d)

(a)(i) NASA is committed to providing to small, small disadvantaged, and women-owned small business concerns, maximum practicable opportunities to participate in Agency acquisitions at the prime contract level. The participation of NASA prime contractors in providing subcontracting opportunities to such entities is also an essential part of the Agency's commitment. The participation of these entities is particularly emphasized in high-technology areas where they have not traditionally dominated.

(ii) Congress established an 8 percent goal for NASA as described in 1819.7000. The Federal Acquisition Streamlining Act of 1994 has made NASA subject to a 5 percent goal for prime and subcontract awards to small disadvantaged business concerns, Historically Black Colleges and

Universities, and minority institutions. Unlike the NASA 8 percent goal, the 5 percent goal does not include prime and subcontract awards to women-owned small businesses. NASA also annually negotiates small, small disadvantaged, and women-owned small business prime and subcontracting goals with the Small Business Administration pursuant to section 15(g) of the Small Business Act (15 U.S.C. 644). These goals are Agencywide goals.

(c) The Associate Administrator for Small and Disadvantaged Business Utilization (Code K) is the Agency official responsible for carrying out the duties in FAR 19.201(c).

(d)(i) The center director shall designate a qualified individual in the contracting office as a small business specialist to provide a central point of contact to which small business concerns may direct inquiries concerning small business matters and participation in NASA acquisitions. The small business specialist shall also perform other functions specifically set forth in this section 1819.201 or that the procurement officer may prescribe, with the concurrence of the Associate Administrator for Small and Disadvantaged Business Utilization, for implementing the Small Business Program. When the center director considers that the volume of acquisitions or the functions relating to acquisitions at the center do not warrant a full-time small business specialist, these duties may be assigned to procurement personnel on a part-time basis.

(ii) Small business specialists appointed under paragraph (d)(i) of this subsection shall perform the following duties, as the procurement officer determines appropriate to the installation:

(A) Maintain a program designed to locate capable small business sources, including those located in labor surplus areas, for current and future acquisitions.

(B) Coordinate inquiries and requests for advice from small business concerns on acquisition matters.

(C) Before issuance of solicitations or contract modifications for additional supplies or services, determine that small business concerns will receive adequate consideration, including making recommendations for initiation of set-asides (see FAR 19.5 and 19.8) and for taking action in accordance with FAR 19.506(b) and 1819.502–70. Participate and provide input early in the acquisition planning phase of proposed acquisitions, including acquisition strategy meetings.

(D) If small business concerns cannot be given an opportunity to compete because adequate specifications or drawings are not available, work with appropriate technical and contracting personnel to ensure that necessary specifications or drawings for current or future acquisitions will be available.

(E) Review acquisitions for possible breakout of items suitable for acquisition from small business concerns.

(F) Advise small business concerns regarding financial assistance available under laws and regulations, assist such concerns in applying for such assistance, and ensure that small business concerns' requests for financial assistance are not treated as a handicap in securing the award of contracts.

(G) Participate in responsibility determinations (see FAR 9.103) when small business concerns are involved.

(H) Participate in the evaluation of prime contractors' small business subcontracting programs (see FAR 19.705–4).

(I) Review and make appropriate recommendations to the contracting officer on any proposal to furnish Government-owned facilities to a contractor if such action may hurt the Small Business Program.

(J) Ensure that participation of small business concerns is accurately reported.

(K) Make available to SBA copies of solicitations when requested.

(L) Act as liaison between contracting officers and SBA area offices and representatives in connection with set-asides, certificates of competency, and any other matters in which the Small Business Program may be involved.

(M) In cooperation with contracting officers and technical personnel, seek and develop information on the technical competence of small business concerns for research and development contracts. Regularly bring to the attention of contracting officers and technical personnel descriptive data, brochures, and other information regarding small business concerns that are apparently competent to perform research and development work in fields in which NASA is interested.

(N) When a small business concern's offer has been rejected for nonresponsiveness or nonresponsibility, assist that concern, upon its request, in understanding such requirements for future awards.

(O) Advise center personnel, as necessary, on new Governmentwide and Agency-approved small business programs and initiatives.

1819.202 Specific policies.

1819.202–1 Encouraging small business participation in acquisitions.

1819.202–170 Contract consolidations.

Prior to effecting a contract consolidation valued at $5 million or more, including options, which will not be exclusively reserved for small or 8(a) firms, the contracting officer, with assistance from the small business specialist and the cognizant technical office, shall prepare an impact assessment of the effects of the consolidation on present and future contracting and subcontracting opportunities for small, small disadvantaged, and women-owned small business. The impact assessment shall address the reasons for the proposed consolidation (especially where apparently unrelated efforts are being combined), the expected benefits, and any actions planned to mitigate or eliminate the impact on small business entities. The impact assessment shall be forwarded to the Associate Administrator for Procurement (Code HS) for concurrence by cognizant Headquarters offices and approval by the Associate Deputy Administrator (Technical).

Subpart 1819.3—Determination of Status as a Small Business Concern

1819.302 Protesting a small business representation. (NASA supplements paragraph (d))

(d)(1) The contracting officer shall not make awards of small business set-aside acquisitions before the expiration of the period for receipt of a size standard protest.

Subpart 1819.5—Set-Asides for Small Business

1819.502 Setting aside acquisitions.

1819.502–70 Non-initiation of set-asides.

(a) All cases involving the non-initiation of a set-aside, whether resulting from a joint decision of the small business specialist and the contracting officer or a decision by the contracting officer alone, require referral to the SBA representative (if one is assigned and available) for review.

(b) If the small business specialist recommends that an individual acquisition or a class of acquisition, or a portion thereof, be set aside, the contracting officer shall promptly either concur in or disapprove the recommendation, stating in writing the reasons for disapproval.

(c) When an SBA representative is assigned and available and the contracting officer disapproves the

small business specialist's recommendation, the contracting officer shall promptly refer the case to the SBA representative for review. The small business specialist shall take no further appeal action. The SBA representative must either concur with the decision or appeal the case to the procurement officer under FAR 19.505. If the procurement officer approves the contracting officer's decision and the SBA appeals under FAR 19.505(c), the procurement officer shall forward the required written justification, including a history of discussions between the center and the SBA and rationale for the decision, to the Headquarters Office of Procurement (HS).

(d) When an SBA representative is not assigned or available and the contracting officer disapproves the small business specialist's recommendation, the small business specialist may appeal in writing to the procurement officer. The procurement officer's decision shall be final. The contracting officer shall place a memorandum of the procurement officer's decision in the contract file. If the procurement officer's decision approves the contracting officer's action, the small business specialist shall forward complete documentation of the case to the Headquarters Office of Small and Disadvantaged Business Utilization (Code K).

(e) The contracting officer shall prepare, sign, and retain in the contract file a memorandum of nonconcurrence in a recommended set-aside action.

§ 1819.502–3 Partial set-asides.

§ 1819.502–370 NASA reporting requirements.

The contracting officer shall separately report, in accordance with Subpart 1804.6, awards of the non-set-aside portions of small business set-aside acquisitions.

1819.505 Rejecting Small Business Administration recommendations.

See 1819.502–70.

1819.506 Withdrawing or modifying set-asides. (NASA supplements paragraph (b))

(b) If an SBA representative is not assigned or available, and the small business specialist disagrees with the contracting officer's written decision of withdrawal or modification of a set-aside determination, the small business specialist may appeal to the procurement officer in accordance with the procedures in 1819.502–70(d).

Subpart 1819.6—Certificates of Competency

1819.602 Procedures.

1819.602–1 Referral. (NASA supplements paragraph (a))

(a) On proposed awards exceeding the simplified acquisition threshold, the contracting officer should consider requesting a preaward survey (see FAR 9.106) before determining that a responsive small business firm is not responsible. The scope of the preaward survey request should be limited to those elements of responsibility that are questioned.

(2) The contracting officer shall forward a copy of the referral to SBA through the procurement officer to the Headquarters Office of Small and Disadvantaged Business Utilization (Code K).

1819.602–3 Resolving differences between the agency and the Small Business Administration.

1819.602–370 NASA procedures.

(a) When agreement cannot be reached between the contracting officer and the SBA Area Office, the contracting officer shall forward to the Headquarters Office of Procurement (Code HS) on an expedited basis, a complete case file with a request that the case be considered for appeal to SBA Headquarters. The contracting officer shall include the data already furnished to SBA, SBA's rationale for proposing to issue a COC, and the contracting officer's comments. The contracting officer shall suspend acquisition action until informed by Code HS of the final decision in the case.

(b) If the Office of Procurement concludes that the referral to SBA should be withdrawn and a contract awarded without benefit of a COC, Code HS shall inform the contracting officer.

(c) If the Office of Procurement agrees with the contracting officer's recommended appeal action, the Associate Administrator for Procurement shall forward the appeal through the Office of Small and Disadvantaged Business Utilization (Code K) to SBA Headquarters.

Subpart 1819.7—Subcontracting With Small Business, Small Disadvantaged Business and Women-Owned Small Business Concerns

1819.705–2 Determining the need for a subcontracting plan. (NASA supplements paragraph (d))

(d) Solicitations for competitive negotiated acquisitions shall require proposed subcontracting plans with initial proposals (see 1819.708(b)(1)). For sole source negotiated acquisitions, the contractor shall be required to submit a proposed subcontracting plan with the proposal.

1819.705–4 Reviewing the subcontracting plan.

1819.705–470 Acquisition-specific subcontracting goals.

Section 1819.201 addresses Agencywide goals at the combined prime and subcontract levels. Appropriate subcontracting goals for an individual acquisition, however, are to be independently determined on the basis of the specific circumstances of the acquisition, consistent with FAR 19.705–4 and 1819.7002(b), and not on the basis of an Agencywide or center goal. Acquisition-specific subcontracting goals should reflect maximum practicable opportunities for all categories of small business concerns to participate in NASA programs, consistent with efficient performance. The methods outlined in NASA Policy Directive (NPD) 5000.2, Uniform Methodology for Determination of Small Disadvantaged Subcontracting Goals, may also be useful in establishing reasonable subcontracting goals for small and women-owned small business concerns.

1819.708 Solicitation provisions and contract clauses. (NASA supplements paragraph (b))

(b)(1) The contracting officer shall use the clause at FAR 52.219–9 with its Alternate II when contracting by negotiation.

1819.708–70 NASA solicitation provision and contract clause.

(a) The contracting officer shall insert the provision at 1852.219–73, Small, Small Disadvantaged, and Women-Owned Small Business Subcontracting Plan, in invitations for bids containing the clause at FAR 52.219–9 with its Alternate I. Insert in the last sentence the number of calendar days after request that the offeror must submit a complete plan.

(b) The contracting officer shall insert the clause at 1852.219–75, Small, Small Disadvantaged, and Women-Owned Small Business Subcontracting Reporting, in solicitations and contracts containing the clause at FAR 52.219–9, except for contracts covered by an approved commercial plan.

Subpart 1819.8—Contracting With the Small Business Administration (the 8(a) Program)

1819.804 Evaluation, offering, and acceptance.

1819.804–1 Agency evaluation.

The small business specialist shall review and evaluate all acquisition requirements to determine their suitability for offering to SBA for 8(a) acceptance and make a recommendation to the contracting officer concerning award to SBA.

Subpart 1819.10—Small Business Competitiveness Demonstration Program

1819.1005 Applicability. (NASA supplements paragraph (b))

(b) The targeted industry categories for NASA and their Standard Industrial Classification (SIC) codes are:

SIC—Industry
Code—Category
3571—Electronic Computers
3577—Computer Peripheral Equipment, not elsewhere classified
3663—Radio & TV Broadcasting and Communications Equipment
3764—Guided Missile and Space Vehicle Propulsion Units and Propulsion Unit Parts
3769—Guided Missile and Space Vehicle Parts and Auxiliary Equipment, not elsewhere classified
3812—Search, Detection, Navigation, Guidance, Aeronautical, and Nautical Systems and Instruments
3827—Optical Instruments and Lenses
7371—Computer Programming Services
7373—Computer Integrated Systems Design
7379—Computer Related Services, not elsewhere classified.

Subpart 1819.70—NASA 8 Percent Goal

1819.7000 General.

Public Laws 101–144, 101–507, and 102–389 require the NASA Administrator to ensure, to the fullest extent possible, that at least 8% of Federal funding for prime and subcontracts awarded in support of authorized programs, including the space station by the time operational status is obtained, be made available to small disadvantaged business concerns, Historically Black Colleges and Universities, minority institutions, and women-owned small business concerns.

1819.7001 Definitions.

(a) *Small Disadvantaged Business (SDB) concern* and *Women-Owned Small Business (WOSB) concern* are defined in FAR 19.001.

(b) *Historically Black College or University (HBCU)* and *Minority Institution (MI)* are defined in FAR 26.301.

1819.7002 Contracting officer responsibility.

(a) Contracting officers must seek out as potential sources entities identified in 1819.7001 and give full consideration to these entities to satisfy NASA requirements. The participation of NASA prime contractors is also essential to meeting the Agency's 8 percent goal.

(b) NASA Policy Directive (NPD) 5000.2, Uniform Methodology for Determination of Small Disadvantaged Subcontracting Goals, contains guidance on developing realistic goals. It is applicable to acquisitions expected to exceed $50 million, including options. The methodology may be used for lesser value acquisitions.

1819.7003 Contract clause.

The contracting officer shall insert the clause at 1852.219–76, NASA 8 Percent Goal, in all solicitations and contracts other than those below the simplified acquisition threshold or when the contract, together with all its subcontracts, is to be performed entirely outside of any State, territory, or possession of the United States, the District of Columbia, the Commonwealth of Puerto Rico, and the Trust Territory of the Pacific Islands.

Subpart 1819.71—NASA Rural Area Small Business Plan

1819.7101 Definition.

Rural area means a county with a population of fewer than twenty thousand individuals.

1819.7102 General.

Pursuant to Public Law 100–590, NASA established a Rural Area Business Enterprise Development Plan, including methods for encouraging prime and subcontractors to use small business concerns located in rural areas as subcontractors and suppliers. One method is to encourage the contractor to use its best efforts to comply with the intent of the statute.

1819.7103 Solicitation provision and contract clause.

The contracting officer shall insert the clause at 1852.219–74, Use of Rural Area Small Businesses, in solicitations and contracts that offer subcontracting possibilities or that are expected to exceed $500,000 ($1,000,000 for construction of public facility) unless the contract, together with all its subcontracts, is to be performed entirely outside of any State, territory, or possession of the United States, the District of Columbia, the Commonwealth of Puerto Rico, and the Trust Territory of the Pacific Islands.

Subpart 1819.72—NASA Mentor-Protégé Program

1819.7201 Scope of subpart.

The NASA Mentor-Protégé Program is designed to incentivize NASA prime contractors to assist small disadvantaged business concerns, Historically Black colleges and Universities, minority institutions, and women-owned small business concerns, in enhancing their capabilities to perform NASA contracts and subcontracts, foster the establishment of long-term business relationships between these entities and NASA prime contractors, and increase the overall number of these entities that receive NASA contract and subcontract awards.

1819.7202 Definitions.

High-Tech is defined in 1819.001.

1819.7203. Non-affiliation.

For purposes of the Small Business Act, a protégé firm may not be considered an affiliate of a mentor firm solely on the basis that the protégé firm is receiving developmental assistance referred to in 1819.7214 from such mentor firm under the Program. In addition, NASA shall not consider partial ownership, up to 10 percent, of a Department of Defense (DOD)-sanctioned protégé firm by its DOD mentor to constitute affiliation.

1819.7204 Transportability of features from the Department of Defense (DOD) Mentor-Protégé program to NASA contractors.

(a) In accordance with the benefits authorized by the DOD Mentor-Protégé Program (Public Law 101–510, Section 831, as amended by Public Law 102–190, Section 814), a NASA contractor who is also an approved DOD mentor can transfer credit features to their NASA contracts.

(b) NASA prime contractors, who are approved DOD mentors, can award subcontracts noncompetitively under their NASA contracts to the protégés which they are assisting under the DOD Program (Public Law 101–510, Section 831(f)(2)).

(c) NASA prime contractors may count the costs of developmental assistance provided of protégés being assisted under the DOD Program toward meeting the goals in their subcontracting plans under their NASA prime contracts (Public Law 102–190,

Section 814). Limitations which may reduce the value of this benefit include:

(1) Credit toward attaining subcontracting goals is available only to the extent that the developmental assistance costs have not been reimbursed to the contractor by DOD as direct or indirect costs; or

(2) The credit is available to meet the goals of a NASA subcontracting plan only to the extent that it has not been applied to a DOD subcontracting plan. The same unreimbursed developmental assistance costs cannot be counted toward meeting the subcontracting goals of more than one prime contract. These costs would accrue from credit for the multiples attributed to assistance provided by Small Business Development Centers, Historically Black Colleges and Universities and minority institutions.

(d) The features identified in paragraphs (a), (b) and (c) of this section point out the portability of features from the DOD Mentor-Protégé Program to NASA prime contractors. NASA mentors will be held to show ''good faith'' by providing actual developmental assistance beyond transferring credit from activity in the DOD Program to NASA subcontracting plans.

1819.7205 General policy.

(a) Eligible large business prime contractors, not included on the ''List of Parties Excluded from Federal Procurement and Nonprocurement Programs'', who have at least one active subcontracting plan, and who are approved as mentor firms may enter into agreements with eligible entities (as defined in 1819.7209) as protégés to provide appropriate developmental assistance to enhance the capabilities of protégés to perform as subcontractors and suppliers. Eligible small business prime contractors, not included on the ''List of Parties Excluded from Federal Procurement and Nonprocurement Programs'', and that are capable of providing developmental assistance to protégés, may also be approved as mentors. An active mentor-protégé arrangement requires the protégé to be a subcontractor under the mentor's prime contract with NASA.

(b) The pilot Program has a duration of three years commencing from March 24, 1995. During this period, eligible mentor firms, which have received approval by NASA to participate in the Program pursuant to 1819.7212, may enter into agreements with protégé firms.

(c) For the pilot phase of the Program, mentor-protégé activity will be limited to cost-plus-award-fee contracts.

(d) Costs incurred by a mentor to provide developmental assistance, technical or managerial assistance described in 1819.7214, are allowable

1819.7206 Incentives for prime contractor participation.

(a) During source selection Mentor-Protégé will be evaluated as part of SDB utilization under the Mission Suitability factor. Under Mission Suitability, SDB utilization will be either a subfactor or an element under a subfactor.

(b) Under cost-plus-award fee contracts, approved mentor firms shall be eligible to earn award fee associated with their performance as a mentor by performance evaluation period. For purposes of earning award fee, the mentor firm's performance shall be evaluated against the criteria described in the clause at 1852.219–79, Mentor Requirements and Evaluation.

1819.7207 Measurement of Program success.

The overall success of the NASA Mentor-Protégé Program encompassing all participating mentors and protégés will be measured by the extent to which it results in:

(a) An increase in the number, dollar value and percentage of subcontractors awarded to protégés by mentor firms under NASA contracts since the date of entry into the Program;

(b) An increase in the number and dollar value of contract and subcontract awards to protégé firms since the time of their entry into the Program (under NASA contracts, contracts awarded by other Federal agencies and under commercial contracts);

(c) An increase in the number and dollar value of subcontracts awarded to a protégé firm by its mentor firm; and

(d) An increase in subcontracting with protégé firms in industry categories where they have not traditionally participating within the mentor firm's activity.

1819.7208 Mentor firms.

(a) Eligibility:

(1) Contractors eligible for receipt of government contracts;

(2) Large prime contractors performing under contracts with at least one negotiated subcontracting plan as required by FAR 19.7; and

(3) Small business prime contractors that can provide developmental assistance to enhance the capabilities of protégés to perform as subcontractors and suppliers.

(b) Mentors will be encouraged to identify and select as protégés:

(1) A broad base of firms including those defined as emerging firms (e.g., a protégé whose size is no greater than 50 percent of the size standard applicable to the SIC code assigned to a contracting opportunity);

(2) Firms in addition to those with whom they have established business relationships; and

(3) High-tech firms.

1819.7209 Protégé firms.

(a) For selection as a protégé, a firm must be:

(1) An SDB, HBCU, MI, or WOSB;

(2) Certified as small in the SIC code for the services or suppliers to be provided by the protégé under its subcontract to the mentor; and

(3) Eligible for receipt of government contracts.

(b) A protégé firm may self-certify to a mentor firm that it meets the requirements set forth in paragraph (a) of this section. Mentors may rely in good faith on written representation by potential protégés that they meet the specified eligibility requirements.

(c) Protégés may have multiple mentors. Protégés participating in mentor-protégé programs in addition to the NASA Program should maintain a system for preparing separate reports of mentoring activity for each agency's program.

1819.7210 Selection of protégé firms.

(a) Mentor firms will be solely responsible for selecting protégé firms. The mentor is encouraged to identify and select the types of protégé firms listed in 1819.7208(b).

(b) Mentor firms may have more than one protégé.

(c) The selection of protégé firms by mentor firms may not be protested, except as in paragraph (d) of this section.

(d) A protest regarding the size of eligibility status of an entity selected by a mentor to be a protégé shall be handled in accordance with FAR 19.703(b). The contracting officer shall notify the Headquarters Office of Small and Disadvantaged Business Utilization (OSDBU) (Code K) of the protest.

1819.7211 Application process for mentor firms to participate in the Program.

(a) Prime contractors interested in becoming a mentor firm must submit a request to the NASA OSDBU to be approved under the Program. The application will be evaluated on the extent to which the company plans to provide developmental assistance. The information required in paragraph (b) of this section must be submitted to be considered for approval as a mentor firm.

(b) A proposed mentor must submit the following information to the NASA OSDBU:

(1) A statement that the mentor firm is currently performing under at least one active approved subcontracting plan (small business exempted) and that they are eligible, as of the date of application, for the award of Federal contracts;

(2) The cognizant NASA contract number(s), type of contract, period of performance (including options), title of technical program effort, name of NASA Program Manager (including contact information) and name of the NASA field center where support is provided;

(3) The number of proposed mentor-protégé arrangements;

(4) Data on all current NASA contracts and subcontracts to include the contract/subcontract number(s), period of performance, awarding NASA installation or contractor and contract/subcontract value(s) including options;

(5) Data on total number and dollar value of subcontracts awarded under NASA prime contracts within the past 2 years and the number and dollar value of such subcontracts awarded to entities defined as protégés.

(6) Information on the proposed types of developmental assistance. For each proposed mentor-protégé relationship include information on the company's ability to provide developmental assistance to the identified protégé firm and how that assistance will potentially increase subcontracting opportunities for the protégé firm, including subcontracting opportunities in industry categories where these entities are not dominant in the company's current subcontractor base; and

(7) A Letter of Intent signed by both parties. At a minimum, the Letter of Intent must include the stated commitment that the parties intend to enter into a mentor-protégé agreement under the NASA Program, that they intend to cooperate in the establishment of a suitable developmental assistance program to meet their respective needs, and that they agree to comply with the obligations in 1819.7215 and all other provisions governing the Program.

1819.7212 OSDBU review and approval process of agreement.

(a) The information specified in 1819.7211(b) is reviewed by the NASA OSDBU. This review will be completed no later than 30 days after receipt by the OSDBU. The OSDBU will provide a copy of the submitted information to the cognizant NASA technical program manager and contracting officer for a parallel review and concurrence.

(b) If OSDBU approves the application, then the mentor

(1) Negotiates an agreement with the protégé; and

(2) Submits an original and two (2) copies of the agreement to the OSDBU for approval by the NASA Mentor-protégé program manager, the NASA technical program manager, and the contracting officer.

(c) Upon agreement approval, the mentor may implement a developmental assistance program.

(d) An approved agreement will be incorporated into the mentor's contract with NASA. It should be added to the subcontracting plan in contracts which contain such a plan.

(e) If OSDBU disapproves the application, then the mentor may provide additional information for reconsideration. The review of any supplemental material will be completed within 30 days after receipt by the OSDBU. Upon finding deficiencies that NASA considers correctable, the OSDBU will notify the mentor and request information to be provided within 30 days that may correct the deficiencies.

1819.7213 Agreement contents.

The contents of the agreement must contain:

(a) Names and addresses of mentor and protégé firms and a point of contact within both firms who will oversee the agreement;

(b) Procedures for the mentor firm to notify the protégé firm, OSDBU, and the contracting officer, in writing, at least 30 days in advance of the mentor firm's intent to voluntarily withdraw from the Program;

(c) Procedures for a protégé firm to notify the mentor firm in writing at least 30 days in advance of the protégé firm's intent to voluntarily terminate the mentor-protégé agreement. The mentor shall notify the OSDBU and the contracting officer immediately upon receipt of such notice from the protégé;

(d) A description of the type of developmental program that will be provided by the mentor firm to the protégé firm, to include a description of the subcontract work, and a schedule for providing assistance and criteria for evaluation of the protégé developmental success;

(e) A listing of the number and types of subcontracts to be awarded to the protégé firm;

(f) Program participation term;

(g) Termination procedures;

(h) Plan for accomplishing work should the agreement be terminated; and

(i) Other terms and conditions, as appropriate.

1819.7214 Developmental assistance.

The forms of developmental assistance a mentor can provide to a protégé include:

(a) Management guidance relating to—

(1) Financial management,

(2) Organizational management,

(3) Overall business management/planning, and

(4) Business development;

(b) Engineering and other technical assistance;

(c) Noncompetitive award of subcontracts under NASA contracts;

(d) Progress payments based on costs. The customary progress payment rate for all NASA contracts with small disadvantaged businesses is 95 percent. This customary progress payment rate for small disadvantaged businesses may be used by prime contractors;

(e) Advance payments. While a mentor can make advance payments to its protégés who are performing as subcontractors, the mentor will only be reimbursed by NASA for these costs if advance payments have been authorized in accordance with statute and regulation;

(f) Loans;

(g) Rent-free use of facilities and/or equipment;

(h) Property; and

(i) Temporary assignment of personnel to the protégé for purpose of training.

1819.7215 Obligation.

(a) The mentor or protégé may voluntarily withdraw from the Program as mutually agreed by both mentor and protégé.

(b) Mentor and protégé firms will submit a ''lessons learned'' evaluation to the NASA OSDBU at the conclusion of the pilot program period or the conclusion of their effort, whichever comes first.

1819.7216 Internal controls.

(a) The NASA OSDBU will manage the Program. Internal controls will be established by the OSDBU to achieve the stated program objectives (by serving as checks and balances against undesired actions or consequences) such as:

(1) Reviewing and evaluating mentor applications for realism, validity and accuracy of provided information;

(2) Reviewing semi-annual progress reports submitted by mentors and protégés, if any, on protégé development to measure protégé progress against the master plan contained in the approved agreement.

(3) Site visits to NASA installation where mentor-protégé activity is on-going.

(b) NASA may terminate mentor-protégé agreements if NASA determines that such actions are in NASA's interest. These actions shall be approved by the NASA OSDBU. NASA will terminate an agreement or exclude a particular entity by sending a written notice to the affected party specifying the action being taken and the effective date of that action. Termination of an agreement does not constitute a termination of the subcontract between the mentor and the protégé. A plan for accomplishing the subcontract effort should the agreement be terminated shall be submitted with the agreement, as required in 1819.7213(h).

1819.7217 Reports.

(a) Semi-annual reports shall be submitted by the mentor to the NASA Mentor-Protégé program manager, the NASA OSDBU, to include information as outlined in 1852.219–79(b).

(b) Protégés are encouraged to submit semi-annual reports to the OSDBU on Program progress pertaining to their mentor-protégé agreement. However, costs associated with the preparation of these reports are unallowable costs under Government contracts and will not be reimbursed by the Government.

(c) The NASA technical program manager shall include an assessment of the prime contractor's (mentor's) performance in the Mentor-Protégé Program in his quarterly 'Strengths and Weaknesses' evaluation report. A copy of these comments, as pertains to the technical effort and protégé development, will be provided to the OSDBU and the contracting officer.

(d) The NASA Mentor-Protégé program manager will submit semi-annual reports to the cognizant contracting officer regarding the participating prime contractor's performance in the Program for use in the award fee determination process.

1819.7218 Program review.

At the conclusion of each year in the Mentor-Protégé Program, the prime contractor and protégé, as appropriate, will formally brief the NASA OSDBU, the technical program manager, and the contracting officer regarding Program accomplishments pertaining to the approved agreement. This review will be incorporated into the normal program review, where applicable. A separate review will be scheduled for other contracts to be held at the NASA work site location.

1819.7219 Solicitation provision and contract clauses.

(a) The contracting officer shall insert the clause at 1852.219–77, NASA Mentor-Protégé Program, in all cost-plus-award-fee solicitations and contracts with subcontracting plans or in the case of small business set-asides exceeding $500,000 ($1,000,000 for construction) that offer subcontracting opportunities.

(b) The contracting officer shall insert the clause at 1852.219–79, Mentor Requirements and Evaluation, in contracts where the prime contractor is a participant in the NASA Mentor-Protégé Program.

PART 1822—APPLICATION OF LABOR LAWS TO GOVERNMENT ACQUISITIONS

1822.604–2 [Amended]

29. In section 1822.604–2, paragraph (c) is redesignated as paragraph (b).

1822.608, 1822.608–4 [Removed]

30. Sections 1822.608 and 1822.608–4 are removed.

PART 1824—PROTECTION OF PRIVACY AND FREEDOM OF INFORMATION

1824.202 [Redesignated]

31. Section 1824.202 is redesignated as 1824.203.

32. Part 1825 is revised to read as follows:

PART 1825—FOREIGN ACQUISITION

Sec.
1825.000 Scope of part.
1825.000–70 Definition.

Subpart 1825.1—Buy American Act—Supplies

1825.101 Definitions.
1825.101–70 NASA definition.
1825.102 Policy.
1825.103 Agreements with certain foreign governments.
1825.103–70 Canadian end products.
1825.105 Evaluating offers.
1825.108 Excepted articles, materials, and supplies.

Subpart 1825.2—Buy American Act—Construction Materials

1825.202 Policy.
1825.207 Solicitation provisions and contract clauses.
1825.207–70 NASA contract clause.

Subpart 1825.3—Balance of Payments Program

1825.304 Excess and near-excess foreign currencies.

Subpart 1825.4—Trade Agreements

1825.400 Scope of subpart.
1825.402 Policy.
1825.403 Exceptions.
1825.405 Procedures.

Subpart 1825.6—Customs and Duties

1825.602 Policy.
1825.603 Procedures.
1825.603–70 NASA procedures.
1825.605 Contract clause.
1825.605–70 NASA contract clause.

Subpart 1825.9—Additional Foreign Acquisition Clauses

1825.901 Omission of Audit clause.

Subpart 1825.70—Foreign Contracts

1825.7000 Scope of subpart.
1825.7001 Definition.
1825.7002 Policy.
1825.7003 Procedure.

Authority: 42 U.S.C. 2473(c)(1).

1825.000 Scope of part.

1825.000–70 Definition.

Agency head, for the purposes of this part, is the Associate Administrator for Procurement unless specifically stated otherwise.

Subpart 1825.1—Buy American Act—Supplies

1825.101 Definitions.

1825.101–70 NASA definition.

Canadian end product, or an item with an estimated value of $25,000 or less, means an unmanufactured end product mined or produced in Canada or an end product manufactured in Canada, if the cost of its components mined, produced, or manufactured in Canada or the United States exceeds 50 percent of the cost of all its components. The cost of components includes transportation costs to the place of incorporation into the end product. For an end product with an estimated value in excess of $25,000, the definition at FAR 25.401 applies.

1825.102 Policy. (NASA supplements paragraphs (a) and (b))

(a)(3)(A) The procurement officer shall send proposed public interest determinations to the Associate Administrator for Procurement (Code HS) for approval.

(B) See 1825.103–70(A) for a blanket determination regarding Canadian end products.

(a)(4) The items listed in FAR 25.108(d)(1) are not mined, produced, or manufactured in the United States in sufficient and reasonably available commercial quantities or a satisfactory quality.

(b)(1) Contracting officers may make determinations of nonavailability both before entering into contracts and in the course of contract administration; provided, however, that in the latter case the Government receives adequate consideration. The following is the format for nonavailability determinations:

Determination of Nonavailability

Pursuant to the authority contained in the Buy American Act (41 U.S.C. 10) and authority delegated to me by NFS 1825.102(b)(1), I hereby make the following findings:

a. (Insert a description of the item or items to be acquired, including unit, quantity, and estimated cost inclusive of duty and transportation costs to destination.)

b. (Enter the name and address of the proposed contractor or supplier and the country of origin of the items.)

c. (Include a brief statement of the necessity for the acquisition.)

d. (Include a statement of facts establishing the nonavailability of similar items of domestic origin. If there is no known domestic item that can be used as a reasonable substitute, make a statement to this effect.)

On the basis of these findings, I determine that the item(s) described in paragraph a. above is/are not mined, produced, or manufactured (or the articles, materials, or supplies from which the item(s) is/are manufactured are not mined, produced, or manufactured) in the United States in sufficient and reasonably available quantities of a satisfactory quality.

Accordingly, the Buy American Act requirement that acquisition be made from domestic sources and that the item(s) be of domestic origin is not applicable to this acquisition, since the acquisition is within the Buy American Act's nonavailability exception.

Authority is granted to acquire the above-described item(s) of foreign origin (country or origin) at an estimated total cost of $_____, including duty and transportation costs to destination.

(Date) _____

Contracting Officer _____

1825.103 Agreements with certain foreign governments.

1825.103–70 Canadian end products.

(a) The Associate Administrator for Procurement has determined that it is inconsistent with the public interest to apply restrictions of the Buy American Act to Canadian end products with estimated values of $25,000 or less as defined in 1825.101–70. Accordingly, contracting officers shall evaluate all offers for such Canadian end products on a parity with offers for domestic and products, except that applicable duty (whether or not a duty free entry certificate may be issued) shall be included in evaluating offers for Canadian end products.

(b) See FAR 25.402(a)(3)(ii) for evaluation of Canadian end products with values in excess of 25,000 as defined in FAR 25.401.

1825.105 Evaluating offers. (NASA supplements paragraphs (a) and (c))

(a) To make the price comparison between domestic and foreign offers, the contracting officer shall increase the price of the foreign offer by 6- or 12-percent, as applicable. If the application of the differential results in a tie between the foreign and domestic offers, award shall be made to the domestic offeror.

(c) The FAR requirement to apply both 6- and 12-percent factors pertains only when the lowest acceptable domestic offer is from a small business concern.

1825.108 Excepted articles, materials, and supplies. (NASA supplements paragraph (a))

(a) See 1825.102(a)(4) and 1825.202(a)(3).

Subpart 1825.2—Buy American Act—Construction Materials

1825.202 Policy. (NASA supplements paragraph (a))

(a)(2) The construction materials listed in FAR 25.108(d)(1) are not mined, produced, or manufactured in the United States in sufficient and reasonably available commercial quantities of a satisfactory quality. In addition, subject to the approval of the head of the contracting activity when required, contracting officers may make determinations of nonavailability both before entering into contracts and in the course of contract administration; provided, however, that in the latter case the Government receives adequate consideration. See 1825.102(b)(1) for the determination of nonavailability format.

1825.207 Solicitation provisions and contract clauses.

1825.207–70 NASA contract clause.

The contracting officer shall insert the clause at 1852.225–71, Nondomestic Construction Materials, in all contracts for construction.

Subpart 1825.3—Balance of Payments Program

1825.304 Excess and near-excess foreign currencies. (NASA supplements paragraph (c))

(c) The NASA Headquarters Comptroller (Code B) is the designated official for making the determination of the feasibility of using excess or near-excess currency.

Subpart 1825.4—Trade Agreements

1825.400 Scope of subpart. (NASA supplements paragraph (b))

(b) The Buy American Act and the Balance of Payments Program apply to all acquisitions of Japanese end products or services in excess of $2,500.

1825.402 Policy. (NASA supplements paragraph (c))

(c)(3) Waiver under the Trade Agreements Act is not applicable to acquisitions of Japanese end products or services in excess of $2,500.

1825.403 Exceptions. (NASA supplements paragraph (c))

(c)(2) If a contracting officer considers an individual acquisition to be a purchase ''indispensable for national security or for national defense purposes'' and appropriate for exclusion from the provisions of FAR 25.4 and of this Subpart 1825.4, the contracting officer shall submit a request with supporting rationale to the Headquarters Office of External Relations (Code I) for coordination with the Office of the U.S. Trade Representative.

1825.405 Procedures.

Solicitations shall require that applicable duty charges be included in the offered price of an eligible product, whether or not duty-free certificates are obtained. Duty charges shall be included in the price evaluation.

Subpart 1825.6—Customs and Duties

1825.602 Policy.

NASA has statutory authority to exempt certain articles from import duties, including articles that will be launched into space, spare parts for such articles, ground support equipment, and unique equipment used in connection with an international program or launch service agreement. This authority is fully described in 14 CFR 1217.

1825.603 Procedures.

1825.603–70 NASA procedures.

(a) The following officials are authorized to certify that articles are eligible for duty free entry:

(1) Procurement officers, through delegation from the Associate Administrator for Procurement, for articles imported into the United States that are acquired by NASA or other U.S. Government agencies, or by U.S. Government contractors or subcontractors when title to the articles is, or will be, vested in the U.S. Government in accordance with the terms of the contract or subcontract. All duty-free certificates (see paragraph (b) of this section for format) shall be coordinated with the center Chief Counsel. Procurement officers shall maintain a record of each certification and make this record available for periodic review by NASA Headquarters and the U.S. Customs Service.

(2) The Associate Administrator for External Relations (Code I) for articles imported pursuant to international agreements.

(3) The Associate Administrator for Space Flight (Code M) for articles imported under agreements other than those identified in paragraph (a) (1) and (2) of this section, including launch service agreements.

(b) Procurement officers shall complete Customs Service Form CF 7501 (Entry Summary) and an appropriate certification when approving duty free exemption for articles acquired by NASA.

(1) For a single import, use the following certification format specified in 14 CFR 1217.104(a):

Articles for the National Aeronautics and Space Administration

Item 9808.00.80, Harmonized Tariff Schedule of the United States

Program: (Insert name of NASA Program)

_____

I hereby certify that the articles identified in *[attached invoice]* are being imported for the use of the National Aeronautics and Space Administration (NASA) in accordance with 9808.00.80, Harmonized Tariff Schedule of the United States.

Name _____

Date _____

(2) For a series of imports under a specific acquisition, use the certification format in paragraph (b)(1) of this section and add the following paragraph specified in 14 CFR 1217.104(c) before the signature block:

Before this certification is used to obtain duty-free entry of these articles, a cognizant NASA official at the receiving NASA Installation, who is designated by the Installation Director, shall verify in writing that specifically identified articles to be entered on a particular date are the articles described in this certification or its attachments. This verification and this certification shall be presented to the U.S. Customs-Service at the time of entry for the particular articles is sought.

1825.605 Contract clause.

1825.605–70 NASA contract clause.

The contracting officer shall insert the clause at 1852.225–73, Duty-Free Entry Supplies, in solicitations and contracts when the supplies that will be accorded duty-free entry are identifiable before award. Insert the supplies determined in accordance with FAR 25.604 and 1825.603.

Subpart 1825.9—Additional Foreign Acquisition Clauses

1825.901 Omission of Audit clause. (NASA supplements paragraph (c))

(c) The Administrator is the approval authority for waivers.The contracting officer shall submit the waiver request, consisting of the determination and findings prescribed in FAR 25.901(d) and any relevant supporting information, to the Headquarters Office of Procurement (Code HS).

Subpart 1825.70—Foreign Contracts

1825.7000 Scope of subpart.

This subpart prescribes policy and procedures for negotiating foreign contracts.

1825.7001 Definition.

Foreign contract acquisition, as used in this subpart, means the acquisition by negotiation of supplies or services, including construction work and research and development when the work is to be performed outside the United States, its possessions, and Puerto Rico by a foreign government or instrumentality thereof or by a foreign private contractor. The term does not include—

(a) Negotiation of government-to-government agreements;

(b) Negotiation of contracts with domestic concerns involving work to be performed outside the United States, its possessions, and Puerto Rico;

(c) Contracts with the Canadian Commercial Corporation; or

(d) Acquisition of books and periodicals from foreign sources of supply.

1825.7002 Policy.

(a) Each contracting office (including NMO JPL) shall coordinate with the Headquarters Office of External Relations (Code I), before initiating any foreign contract acquisition if the acquisition is valued above $100,000 or involves—

(1) Importing or exporting goods or technical data from or to a country listed in 22 FR 126.1 (a) or (d) (Subchapter M, the International Traffic in Arms Regulations);

(2) Importing or exporting Defense Articles or Defense Services on the United States Munitions List at 22 CFR Part 121 which require NASA to obtain a license from the State Department's Office of Defense Trade Controls;

(3) Exporting goods or technical data on the Commerce Control List at 15 CFR Part 744 and that require NASA to obtain either a Special or an Individual Validated License;

(4) Importing and/or exporting goods or technical data from or to an entity listed in 15 CFR Part 744, Supplements 1 through 3; or

(5) Exporting and/or importing of goods, technology, or services to or from any entity subject to transaction control, embargo, or sanctions pursuant to 31 CFR Chapter V.

(b) All coordination required between NASA and the Departments of Commerce, State, and Treasury regarding foreign contract acquisitions shall be accomplished through Headquarters Code I.

1825.7003 Procedure.

The Headquarters or field installation technical office requiring a foreign contract acquisition meeting any of the criteria listed in 1825.7002 shall submit the following information to Headquarters Code I—

(a) The name of the foreign entity, the country or countries involved, and the purpose of the contract;

(b) The Space Act agreement(s) involved (pursuant to NMI 1050.9), if any,

(c) A description of the goods or technical data requiring prior written approval or the issuance of the license for their import or export from the Departments of Commerce, State, or Treasury; and

(d) The reason why the acquisition is being placed with a foreign entity.

33. Part 1827 is revised as set forth below:

PART 1927—PATENTS, DATA, AND COPYRIGHTS

Sec.
1827.000 Scope of part.

Subpart 1827.3—Patent Rights Under Government Contracts

1827.301 Definitions.
1827.302 Policy.
1827.303 Contract clauses.
1827.303–70 NASA solicitation provisions and contract clauses.
1827.304 Procedures.
1827.304–1 General.
1827.304–2 Contracts placed by or for other Government agencies.
1827.304–3 Contracts for construction work or architect-engineer services.
1827.304–4 Subcontracts.
1827.304–5 Appeals.
1827.305 Administration of the patent rights clauses.
1827.305–3 Follow-up by Government.
1827.305–370 NASA patent rights and new technology follow-up procedures.
1827.305–371 New technology reporting plan.
1827.305–4 Conveyance of invention rights acquired by the Government.

Subpart 1827.4—Rights in Data and Copyrights

1827.404 Basic rights in data clause.
1827.405 Other data rights provisions.
1827.406 Acquisition of data.
1827.406–70 Report of work.
1827.408 Cosponsored research and development activities.

1827.409 Solicitation provisions and contract clauses.
1827.409–70 NASA contract clause.

Subpart 1827.6—Foreign License and Technical Assistance Agreements

1827.670 Space Station technical data and goods.
1827.670–1 Policy.
1827.670–2 Contract clause.

Authority: 42 U.S.C. 2473(c)(1).

1827.000 Scope of part.

This part prescribes NASA policies, procedures, and clauses pertaining to patents, data, and copyrights. The provisions of FAR Part 27 apply to NASA acquisitions unless specifically excepted in this part.

Subpart 1827.3—Patent Rights Under Government Contracts

1827.301 Definitions.

Administrator, as used in this subpart, means the Administrator of NASA or a duly authorized representative.

Contract, as used in this subpart, means any actual or proposed contract, agreement, understanding, or other arrangement, and includes any assignment, substitution of parties, or subcontract executed or entered into thereunder.

Made, in lieu of the definition in FAR 27.301, as used in this subpart, means conceived or first actually reduced to practice; provided that in the case of a variety of plant, the date of determination (as defined in Section 41(d) of the Plant Variety Protection Act, 7 U.S.C. 2401(d)) must also occur during the period of contract performance.

Reportable item, as used in this subpart, means any invention, discovery, improvement, or innovation of the contractor, whether or not patentable or otherwise protectible under Title 35 of the United States Code, made in the performance of any work that is reimbursable under any clause in any NASA contract providing for reimbursement of costs incurred before the effective date of the contract.

Subject invention, in lieu of the definition in FAR 27.301, as used in this subpart, means any reportable item that is or may be patentable or otherwise protectible under Title 35 of the United States Code, or any novel variety of plant that is or may be protectible under the Plant Variety Protection Act (7 U.S.C. 2321 *et seq.*).

1825.302 Policy. (NASA supplements paragraphs (a), (b), (c), (d), (e), (f), (g), and (i)).

(a) Introduction.

(i) NASA policy with respect to any invention, discovery, improvement, or innovation made in the performance of work under any NASA contract or subcontract with other than a small business firm or a nonprofit organization and the allocation to related property rights is based upon Section 305 of the National Aeronautics and Space Act of 1958, as amended (42 U.S.C. 2457) (the Act); and, to the extent consistent with this statute, the Presidential Memorandum or Government Patent Policy to the Heads of Executive Departments and Agencies, dated February 18, 1983, and Section 1(d)(4) of Executive Order 12591. NASA policy with respect to any invention made in the performance of experimental, developmental, or research work with a small business firm or a nonprofit organization is based on 35 U.S.C. Chapter 18, as amended.

(ii) NASA contracts subject to Section 305 of the Act shall ensure the prompt reporting of reportable items in other to protect the Government's interest and to provide widest practicable and appropriate dissemination, early utilization, expeditious development, and continued availability for the benefit of the scientific, industrial, and commercial communities and the general public.

(b) Contractor right to elect title.

(i) For NASA contracts, the contractor right to elect title only applies to contracts with small businesses and non-profit organizations. For other business entities, see subdivision (ii) of this paragraph.

(ii) Contractor right to request a waiver of title. For NASA contracts with other than a small business firm or a nonprofit organization (contracts subject to Section 305 of the Act), it is the policy of NASA to waive the rights (to acquire title) of the United States (with the reservation of a Government license set forth in FAR 27.302(c) and the march-in rights of FAR 27.302(f) and 1827.302(f)) in and to any subject invention if the Administrator determines that the interests of the United States will be served. This policy, as well as the procedures and instructions for such waiver of rights, is stated in the NASA Patent Waiver Regulations, 14 CFR Section 1245, Subpart 1. Waiver may be requested in advance of contract award for any or all of the subject inventions, or for individually identified subject inventions reported under the contract. When waiver of rights is granted, the contractor's right to title, the rights reserved by the Government, and other conditions and obligations of the waiver shall be included in an Instrument of Waiver executed by NASA and the party receiving the waiver.

(iii) It is also a policy of NASA to consider for a monetary award, when referred to the NASA Inventions and Contributions Board, any subject invention reported to NASA in accordance with this subpart, and for which an application for patent has been filed.

(c) Government license. For each subject invention made in the performance of work under a NASA contract with other than a small business firm or nonprofit organization and for which waiver of rights has been granted in accordance with 14 CFR Section 1245, Subpart 1, the Administrator shall reserve an irrevocable, nonexclusive, nontransferable, royalty-free license for the practice of such invention throughout the world by or on behalf of the United States or any foreign Government in accordance with any treaty or agreement of the United States.

(d) Government right to receive title. Under any NASA contract with other than a small business or nonprofit organization (i.e., those contracts subject to Section 305(a) of the Act), title to subject inventions vests in NASA when the determinations of Section 305(a)(1) or 305(a)(2) have been made. The Administrator may grant a waiver of title in accordance with 14 CFR Section 1245.

(e) Utilization reports. For any NASA contract with other than a small business firm or a nonprofit organization, the requirements for utilization reports shall be as set forth in the NASA Patent Waiver Regulations, 14 CFR Section 1245, Subpart 1, and any Instrument of Waiver executed under those Regulations.

(f) March-in rights. For any NASA contract with other than a small business firm or a nonprofit organization, the march-in rights shall be as set forth in the NASA Patent Waiver Regulations, 14 CFR Section 1245, Subpart 1, and any Instrument of Waiver executed under those Regulations.

(g) Preference for United States industry. Waiver of the requirement for the agreement for any NASA contract with other than a small business firm or a nonprofit organization shall be in accordance with the NASA Patent Waiver Regulations, 14 CFR Section 1245, Subpart 1.

(i) Minimum rights to contractor.

(1) For NASA contracts with other than a small business firm or a nonprofit organization (i.e., those contracts subject to Section 305(a) of the Act), where title to any subject inventions vests in NASA, the contractor is normally granted, in accordance with 14 CFR

1245, a revocable, nonexclusive, royalty-free license in each patent application filed in any country and in any resulting patent. The license extends to any of the contractor's domestic subsidiaries and affiliates within the corporate structure, and includes the right to grant sublicenses of the same scope to the extent the contractor was legally obligated to do so at the time the contract was awarded. The license and right are transferable only with the approval of the Administrator, except when transferred to the successor of that part of the contractor's business to which the invention pertains.

(2) The Administrator is the approval authority for revoking or modifying a license. The procedures for revocation or modification are described in 37 CFR 404.10 and 14 CFR 1245.108.

1827.303 Contract clauses. (NASA supplements paragraphs (a), (b), (c) and (d))

(a)1)(A) See 1827.303–70(a).

(B) To qualify for the clause at FAR 52.227–11, a prospective contractor may be required to represent itself as either a small business firm or a nonprofit organization. If there is reason to question the status of the prospective contractor, the contracting officer may file a protest in accordance with FAR 19.302 if small business firm status is questioned, or require the prospective contractor to furnish evidence of its status as nonprofit organization.

(b)(1)(ii) FAR 52.227–12 is not used in NASA contracts. See instead 1827.303–70(b).

(c)(1)(ii) When work is to be performed outside the United States, its possessions, and Puerto Rico by contractors that are not domestic firms, see 1827.303–70(f).

(2) See 1827.303–70 (b) and (f).

(d)(1) When one of the conditions in FAR 27.303(d)(1) (i) through (iv) is met, the contracting officer shall consult with the installation intellectual property counsel to determine the appropriate clause.

1827.303–70 NASA solicitation provisions and contract clauses.

(a) When the clause at FAR 52.227–11 is included in a solicitation or contract, it shall be modified as set forth at 1852.227–11.

(b) The contracting officer shall insert the clause at 1852.227–70, New Technology, in all NASA solicitations and contracts with other than a small business firm or a nonprofit organization (i.e., those subject to section 305(a) of the Act), if the contract is to be performed in the United States, its possessions, or Puerto Rico and has as a purpose the performance of experimental, developmental, research, design, or engineering work. Contracts for any of the following purposes may be considered to involve the performance of work of the type described above (these examples are illustrative and not limiting):

(1) Conduct of basic or applied research.

(2) Development, design, or manufacture for the first time of any machine, article of manufacture, or composition of matter to satisfy NASA's specifications or special requirements.

(3) Development of any process or technique for attaining a NASA objective not readily attainable through the practice of a previously developed process or technique.

(4) Testing of, evaluation of, or experimentation with a machine, process, concept, or technique to determine whether it is suitable or could be made suitable for a NASA objective.

(5) Construction work or architect-engineer services having as a purpose the performance of experimental, developmental, or research work or test and evaluation studies involving such work.

(6) The operation of facilities or the coordination and direction of the work of others, if these activities involve performing work of any of the types described in subparagraphs (a) through (e) of this paragraph.

(c) The contracting officer shall insert the provision at 1852.227–71, Requests for Waiver of Rights to Inventions, in all solicitations that include the clause at 1852.227–70, New Technology (see paragraph (b) of this section).

(d) The contracting officer shall insert the clause at 1852.227–72, Designation of New Technology Representative and Patent Representative, in all solicitations and contracts containing either of the clauses at FAR 52.227–11, Patent Rights—Retention by the Contractor (Short Form) or 1852.227–70, New Technology (see paragraph (c) of this section). It may also be inserted, upon consultation with the installation intellectual property counsel, in solicitations and contracts using another patent rights clause. The New Technology Representative shall be the Technology Utilization Officer or the Staff member (by titled position) having cognizance of technology utilization matters for the installation concerned. The Patent Representative shall be the intellectual property counsel (by titled position) having cognizance of patent matters for the installation concerned.

(e) The contracting officer shall insert the provision at 1852.227–84, Patent Rights Clauses, in solicitations for experimental, developmental, or research work to be performed in the United States, its possessions, or Puerto Rico when the eventual awardee may be a small business or a nonprofit organization.

(f) As authorized in FAR 27.303(c)(2), when work is to be performed outside the United States, its possessions, and Puerto Rico by contractors that are not domestic firms, the clause at 1852.227–85, Invention Reporting and Rights—Foreign, shall be used unless the contracting officer determines, with concurrence of the installation intellectual property counsel, that the objectives of the contract would be better served by use of the clause at FAR 52.227–13, Patent Rights—Acquisition by the Government. For this purpose, the contracting officer may presume that a contractor is not a domestic firm unless it is known that the firm is not foreign owned, controlled, or influenced. (See FAR 27.304–4(a) regarding subcontracts with U.S. firms.)

1827.304 Procedures.

1827.304–1 General. (NASA supplements paragraphs (a), (b), (c), (f), (g), and (h))

(a) *Contractor appeals of exceptions.* In any contract with other than a small business firm or nonprofit organization, the NASA Patent Waiver Regulations, 14 CFR Section 1245, Subpart 1, shall apply.

(b) *Greater rights determinations.* In any contract with other than a small business firm or a nonprofit organization and with respect to which advance waiver of rights has not been granted (see 1827.302(b)), the contractor (or an employee-inventor of the contractor after consultation with the contractor) may request waiver of title to an individual identified subject invention pursuant to the NASA Patent Waiver Regulations, 14 CFR Section 1245, Subpart 1.

(c) *Retention of rights by inventor.* The NASA Patent Waiver Regulations, 14 CFR Section 1245, Subpart 1, apply for any invention made in the performance of work under any contract with other than a small business firm or a nonprofit organization.

(f) *Revocation or modification of contractor's minimum rights.* Revocation or modification of the contractor's license rights (see 1827.302–(i)(2)) shall be in accordance with 37 CFR 404.10, for subject inventions made and reported under any contract with other than a small business firm or a nonprofit organization.

(g) *Exercise of march-in rights.* For contracts with other than a small

business firm or a nonprofit organization, the procedures for the exercise of march-in rights shall be as set forth in the NASA Patent Waiver Regulations, 14 CFR Section 1245, Subpart 1.

(h) *Licenses and assignments under contracts with nonprofit organizations.* The Headquarters Associate General Counsel (Intellectual Property) (Code GP) is the approval authority for assignments. Contractor requests should be made to the Patent Representative designated in the clause at 1852.227–72 and forwarded, with recommendation, to Code GP for approval.

1827.304–2 Contracts placed by or for other Government agencies. (NASA supplements paragraph (a))

(a)(3) When a contract is placed for another agency and the agency does not request the use of a specific patent rights clause, the contracting officer, upon consultation with the installation intellectual property counsel, may use the clause at FAR 52.227–11, Patent Rights—Retention by the Contractor (Short Form) as modified by 1852.227–11 (see 1827.303–70(a)) or 1852.227–70, New Technology (see 1827.303–70(b)).

1827.304–3 Contracts for construction work or architect-engineer services. (NASA supplements paragraph (a))

(a) For construction or architect-engineer services contracts with other than a small business or nonprofit organization, see 1827.303–70(b).

1827.304–4 Subcontracts. (NASA supplements paragraph (a))

(a)(i) Unless the contracting officer otherwise authorizes or directs, contractors awarding subcontracts and subcontractors awarding lower-tier subcontracts shall select and include one of the following clauses, suitably modified to identify the parties, in the indicated subcontracts:

(A) The clause at 1852.227–70, New Technology, in any subcontract with other than a small business firm or a nonprofit organization if a purpose of the subcontract is the performance of experimental, developmental, research, design, or engineering work of any of the types described in 1827.303–70(b)(1)–(6).

(B) The clause at FAR 52.227–11, Patent Rights—Retention by the Contractor (Short Form), modified by 1852.227–11 (see 1827.303–70(a)), in any subcontract with a small business firm or a nonprofit organization if a purpose of the subcontract is the performance of experimental, developmental, or research work.

(ii) Whenever a prime contractor or a subcontractor considers it inappropriate to include one of the clauses discussed in paragraph (a) of this section in a particular subcontract, or a subcontractor refuses to accept the clause, the matter shall be resolved by the contracting officer in consultation with the intellectual property counsel.

1827.304–5 Appeals.

FAR 27.304–5 shall apply unless otherwise provided in the NASA Patent Waiver Regulations, 14 CFR Section 1245, Subpart 1.

1827.305 Administration of the patent rights clauses.

1827.305–3 Follow-up by Government.

1827.305–370 NASA patent rights and new technology follow-up procedures.

(a) For each contract containing a patent rights clause or the clause at 1852.227–70, New Technology, the contracting officer shall take the following actions:

(1) Furnish, or require the contractor or furnish directly, the New Technology Representative and the Patent Representative a copy of each contract (and modifications thereto), and copies of the final technical report, interim technical progress reports, and other pertinent material provided under the contract, unless the representatives indicate otherwise; and

(2) Notify the New Technology Representative as to which installation organizational element has technical cognizance of the contract.

(b) The New Technology Representative shall take the following actions:

(1) Review the technical progress of work performed under the contract to ascertain whether the contractor and its subcontractors are complying with the clause's reporting and recordkeeping requirements;

(2) Forward to the Patent Representative copies of all contractor and subcontractor written reports of reportable items and disclosures of subject inventions, and a copy of the written statement, if any, submitted with the reports.

(3) Consult with the Patent Representative whenever a question arises as to whether a given reportable item is to be considered a subject invention and whether it was made in the performance of work under the contract.

(4) Forward to the Patent Representative all correspondence relating to inventions and waivers under the New Technology clause or election of title under the Patent Rights—Retention by the Contractor (Short Form) clause.

(5) Upon receipt of any final report required by the clause, and upon determination that the contract work is complete, determine whether the contractor has complied with the clause's reporting requirements. If so, the New Technology Representative shall certify compliance, obtain the Patent Representative's concurrence, and forward the certification to the contracting officer.

(c) The Patent Representative shall review each reportable item to ascertain whether it is to be considered a subject invention, obtain any determinations required by paragraph (b) of the clause at 1852.227–70, New Technology, and notify the contractor. As to any subject invention, the Patent Representative shall:

(1) Ensure that the contractor has provided sufficient information to protect the Government's rights and interests in it and to permit the preparation, filing, and prosecution of patent applications;

(2) Determine inventorship;

(3) Ensure the preparation of instruments establishing the Government's rights' and

(4) Conduct selected reviews to ensure that subject inventions are identified, adequately documented, and timely reported or disclosed.

(d) Either the New Technology Representative or the Patent Representative, in consultation with the other, may prepare opinions, make determinations, and otherwise advise the contracting officer with respect to any withholding of payment under paragraph (g) of the clause at 1852.227–70, New Technology. Either the New Technology Representative or the Patent Representative may represent the contracting officer for the purpose of examining the contractor's books, records, and other documents in accordance with paragraph (f) of the clause and take corrective action as appropriate. However, no action may be taken by either the New Technology Representative or the Patent Representative that would constitute a final decision under the Disputes clause, involve any change or increase in the work required to be performed under the contact that is inconsistent with any right of appeal provided in FAR 27.304–5 or 14 CFR 1245, Subpart 1, or otherwise be outside the scope of the contract.

(e) The contracting officer shall not approve release of final payment under the contract and, if applicable, any reserve set aside under the withholding provisions of the clause for deficiencies and delinquent reporting not corrected as of the time of the submission of the

final report by the contractor until receipt of the New Technology Representative's certification of compliance, and the Patent Representative's concurrence.

1827.305–371 New technology reporting plan.

In contracts with an estimated cost in excess of $2,500,000 (or less when appropriate) that contain the clause at 1852.227–70, New Technology, the contracting officer may require the contractor to submit for post-award Government approval a detailed plan for new technology reporting that demonstrates an adequate understanding of and commitment to the reporting requirements of the clause.

1827.305–4 Conveyance of invention rights acquired by the Government. (NASA supplements paragraph (a))

(a) When the Government acquires the entire right to, title to, and interest in an invention under the clause at 1852.227–70, New Technology, a determination of title is to be made in accordance with Section 305(a) of the National Aeronautics and Space Act of 1958, as amended (42 U.S.C. 2457(a)), and reflected in appropriate instruments executed by NASA and forwarded to the contractor.

Subpart 1827.4—Rights in Data and Copyrights

1827.404 Basic rights in data clause. (NASA supplements paragraphs (d), (e), (f), (g), (h), and (i))

(d) *Protection of limited rights data specified for delivery.* The contracting officer shall consult with the installation patent or intellectual property counsel regarding any questions concerning the delivery of limited rights data and/or the use of Alternate II that may arise from an offeror's response to the provision at FAR 52.227–15, Representation of Limited Rights Data and Restricted Computer Software, or during negotiations.

(e) *Protection of restricted computer software specified for delivery.* The contracting officer shall consult with the installation patent or intellectual property counsel regarding any questions concerning the delivery of restricted computer software and/or the use of Alternate III that may arise from an offeror's response to the provision at FAR 52.227–15, Representation of Limited Rights Data and Restricted Computer Software, or during negotiations.

(f) *Copyrighted data.*—(1)(ii) The contracting officer shall consult with the installation patent or intellectual property counsel before granting permission for a contractor to claim copyright subsisting in data, other than computer software, first produced under the contract.

(iv) The contracting officer, with the concurrence of the installation intellectual property counsel, is the approval authority for obtaining a copyright license of a different scope than set forth in subparagraph (c)(1) of the clause at FAR 52.227–14, Rights in Data—General, for any contract or class of contracts.

(2)(i) The procurement officer is the approval authority for obtaining a copyright license of a different scope than that set forth in subparagraph(c)(2) of the clause at FAR 52.227–14 for any contract or class of contracts.

(g) *Release, publication, and use of data.*

(3)(A) NASA's intent is to ensure the most expeditious dissemination of computer software developed by it or its contractor. Accordingly, when the clause at FAR 52.227–14, Rights in Data-General, is modified by 1852.227–14 (see 1827.409(a)), the contractor may not assert claim to copyright, publish, or release to others computer software first produced in the performance of a contract without the contracting officer's prior written permission.

(B) The contracting officer may, in consultation with the installation patent or intellectual property counsel, grant the contractor permission to copyright, publish, or release to others computer software first produced in the performance of a contract if:

(a) The contractor has identified an existing commercial computer software product line or proposes a new one and states a positive intention of incorporating any computer software first produced under the contract into that line, either directly itself or through a licensee;

(b) The contractor has made, or will be required to make, significant contributions to the development of the computer software by co-funding or by cost-sharing, or by contributing resources (including but not limited to agreement to provide continuing maintenance and update of the software at no cost for Governmental use); or

(c) The concurrence of the Headquarters Office of Aeronautics Commercial Technology Division (Code RW) is obtained.

(C)(a) The contractor's request for permission in accordance with 1827.404(g)(3)(A) may be made either before contract award or during contract performance.

(b) Any permission granted in accordance with 1827.404(g)(3)(B) (a) or (b) shall be by express contract provision (or amendment) overriding subparagraph (d)(3) or FAR 52.227–14, Rights in Data—General, (as modified by 1852.227–14), rather than by deleting it. The contract provision may contain appropriate assurances that the computer software will be incorporated into an existing or proposed new commercial computer software product line within a reasonable time and/or that the agreed contributions to the Government are fulfilled, with contingencies enabling the Government to obtain the right to distribute the software for commercial use, including the right to obtain assignment of copyright where applicable, in order to prevent the computer software from being suppressed or abandoned by the contractor.

(c) Any permission granted in accordance with 1827.404(g)(3)(B)(c) may be either by deleting subparagraph (d)(3) or by special contract provision, as appropriate.

(d) When any permission to copyright is granted, any copyright license retained by the Government shall be of the same scope as set forth in subparagraph (c)(1) of the clause at FAR 52.227–14 and without any obligation of confidentiality on the part of the Government, unless in accordance with 1827.404(g)(3)(B)(b) the contributions of the Contractor may be considered ''substantial'' for the purposes of FAR 27.408 (i.e., approximately 50 percent), in which case rights consistent with FAR 27.408 may be negotiated for the computer software in question.

(D) If the contractor has not been granted permission to copyright, paragraph (d)(3)(ii) of the clause at FAR 52.227–14, Rights in Data—General (as modified by 1852.227–14) enables NASA to direct the contractor to assert claim to copyright in computer software first produced under the contract and to assign, or obtain the assignment of, such copyright to the Government or its designee. The contracting officer may, in consultation with the installation intellectual property counsel, so direct the contractor in situations where copyright protection is considered necessary in furtherance of Agency mission objectives, needed to support specific Agency programs, or necessary to meet statutory requirements.

(h) *Unauthorized marking of data.* The contracting officer shall consult with the installation patent or intellectual property counsel before taking any action regarding unauthorized markings of data under paragraph (e) of the clause at FAR 52.227–14, Rights in Data—General.

(i) *Omitted or incorrect notices.* The contracting officer shall consult with the installation patent or intellectual property counsel before agreeing to add or correct any markings on data under paragraph (f) of the clause at FAR 52.227–14, Rights in Data—General.

§ 1827.405 Other data rights provisions. (NASA supplements paragraphs (b) and (c))

(b)(2) *Acquisition of existing computer software.* See 1827.409(k) (i)–(ii) and 1827.409–70 for modifications and alternatives to the clause at 52.227–19.

(c) *Contracts awarded under the Small Business Innovative Research (SBIR) Program.* If, during the performance of an SBIR contract (Phase I or Phase II), the need arises for NASA to obtain delivery of restricted computer software as defined in the clause at FAR 52.227–20, Rights in Data—SBIR Program, and the contractor agrees to such delivery, the restricted computer software may be required with restricted rights by modification of the contract or under an agreement incorporated in and made part of the contract, using the restricted rights set forth in FAR 27.404(e) and the related restrictions as a guide.

1827.406 Acquisition of data. (NASA supplements paragraph (a))

(a) *General.* Requirements for delivering technical data relating to standard commercial items, components, or processes should be kept to the absolute minimum consistent with the purpose for which they are being procured. Normally, a vendor's manuals for installation, operation, or maintenance and repair and/or form, fit, and function data are adequate.

1827.406–70 Reports of work.

(a) When considered necessary for monitoring contract performance, contracting officers shall require contractors to furnish reports of work performed under research and development contracts (fixed-price and cost reimbursement) or in cost-reimbursement supply contracts. This purpose may be achieved by including the following general requirements, modified as needed to meet the particular requirements of the contract, in the section of the contract specifying data delivery requirements:

(1) *Monthly progress reports.* Reports should be in narrative form, brief, and informal. They should include a quantitative description of progress, an indication of any current problems that may impede performance, proposed corrective action, and a discussion of the work to be performed during the next monthly reporting period. (Normally, this requirement should not be used in contracts with nonprofit organizations.)

(2) *Quarterly progress reports.* In addition to factual data, these reports should include a separate analysis section interpreting the results obtained, recommending further action, and relating occurrences to the ultimate objectives of the contract. Sufficient diagrams, sketches, curves, photographs, and drawings should be included to convey the intended meaning.

(3) *Final report.* This report should summarize the results of the entire contract, including recommendations and conclusions based on the experience and results obtained. The final report should include tables, graphs, diagrams, curves, sketches, photographs, and drawings in sufficient detail to explain comprehensively the results achieved under the contract.

(4) *Report Documentation Page.* The contractor should include a completed Report Documentation Page (SF 298) as the final page of each report submitted.

(b) The contracting officer shall consider the desirability of providing reports on the completion of significant units or phases of work, in addition to periodic reports and reports on the completion of the contract.

(c) A reproducible copy and a printed, or reproduced, copy of the reports shall be sent to the NASA Center for AeroSpace Information (CASI), Attn: Accessioning Department, 800 Elkridge Landing Road, Linthicum Heights, MD 21090–2934 (see 1835.070(a)).

1827.408 Cosponsored research and development activities.

The contracting officer shall consult with the installation patent or intellectual property counsel before limiting the acquisition of or acquiring less than unlimited rights to any data developed under contracts involving cosponsored research and development activities.

1827.409 Solicitation provisions and contract clauses. (NASA supplements paragraph (a), (b), (c), (d), (e), (i), and (k))

(a) The contracting officer shall add subparagraph (3) set forth in 1852.277–14 to paragraph (d) of the clause at FAR 52.227–14, Rights in Data—General, except in solicitations and contracts for basic or applied research with universities or colleges.

(b) The contracting officer, with the concurrence of the installation intellectual property counsel, is the approval authority for use of Alternate I. An example of its use is where the principal purpose of the contract (such as a contract for basic or applied research) does not involve the development, use, or delivery of items, components, or processes that are intended to be acquired for use by or for the Government (either under the contract in question or under any anticipated follow-on contracts relating to the same subject matter).

(c) The contracting officer shall normally add the disclosure purposes listed in FAR 27.404(d)(1) (i)–(v) to subparagraph (g)(2). However, the contracting officer may, upon consultation with the installation patent or intellectual property counsel, make deletions from the specific purposes listed. If all are deleted, the word ''None'' must be inserted. Additions to those specific purposes listed may be made only with the approval of the procurement officer and concurrence of the installation patent or intellectual property counsel.

(d) The contracting officer shall consult with the installation patent or intellectual property counsel regarding the acquisition of restricted computer software with greater or lesser rights than those set forth in Alternate III. Where it is impractical to actually modify the notice of Alternate III, this may be done by express reference in a separate clause in the contract or by a collateral agreement that addresses the change in the restricted rights.

(e) The contracting officer, with the concurrence of the installation intellectual property counsel, is the approval authority for the use of Alternate IV in any contract other than a contract for basic or applied research to be performed solely by a college or university on campus (but not for the management or operation of Government facilities).

(i) The contract officer shall modify the clause at FAR 52.227–17, Rights in Data—Special Works by adding paragraph (f) as set forth in 1852.227–17.

(k)(i) The contracting officer shall add paragraph (e) as set forth in 1852.227–19(a) to the clause at FAR 52.227–19, Commercial Computer Software—Restricted Rights, when it is contemplated that updates, correction notices, consultation information, and other similar items of information relating to commercial computer software delivered under a purchase order or contract are available and their receipt can be facilitated by signing a vendor supplied agreement, registration forms, or cards and returning them directly to the vendor.

(ii) The contracting officer shall add paragraph (f) as set forth at 1852.227–19(b) to the clause at FAR 52.227–19, Commercial Computer Software—Restricted Rights, when portions of a contractor's standard commercial license or lease agreement consistent with the clause, Federal laws, standard industry practices, and the FAR are to be incorporated into the purchase order or contract.

(iii) See 1827.409–70.

1827.409–70 NASA contract clause.

The contracting officer shall use the clause at 1852.227–86, Commercial Computer Software—Licensing, in lieu of FAR 52.227–19, Commercial Computer Software—Restricted Rights, when it is considered appropriate for the acquisition of existing computer software in accordance with FAR 27.405(b)(2).

Subpart 1827.6—Foreign License and Technical Assistance Agreements

1827.670 Space Station technical data and goods.

1827.670–1 Policy.

NASA and its contractors shall comply will all applicable export control laws, including the International Traffic in Arms Regulations (ITAR), 22 CFR Parts 120–130, and the Export Administration Regulations (EAR), 15 CFR Parts 730–799, with respect to the transfer of technical data and goods to any International Space Station program multilateral partner or contractor. When authorized, certain technical data in support of the International Space Station program may be exported to a foreign recipient specified in writing by the contracting officer. Contracting officers, or designees, will assure that any transfer of data to a foreign recipient will be in compliance with all applicable directives, including the NASA Export Control Program.

1827.670–2 Contract clause.

The contracting officer shall insert the clause at 1852.227–87, Transfer of Technical Data Under Space Station International Agreements, in all solicitations, contracts, and purchase orders in support of Space Station program activities that may involve transfer of technical data subject to the International Traffic in Arms Regulations, 22 CFR Parts 120–130, or the Export Administration Regulations (EAR), 15 CFR Parts 730–799 in accordance with the NASA Export Control Program.

PART 1832—CONTRACT FINANCING

1832.409–170 [Amended]

34–35. In section 1832.409–170, paragraph (5) is redesignated as paragraph (e).

1832.412 [Amended]

36. In paragraph (a)(i) of section 1832.412, the phrase ''(either paragraph (d) or (e))'' is revised to read ''(either paragraph (e) of the basic clause and Alternate II, or paragraph (d) of Alternate V)''.

1832.903 [Removed]

37. Section 1832.903 is removed.

38. In section 1832.908, paragraph (c) is revised to read as follows:

1832.908 Contract clauses.

(c) When the clause at FAR 52.232–25, Prompt Payment, is used in contracting with the CCC subject to the conditions at 1832.970, make the following modifications:

(i) Insert ''17th'' in lieu of ''30th'' in paragraphs (a)(1)(i)(A), (a)(1)(i)(B), and (a)(1)(ii); and

(ii) Annotate the clause ''as modified by NASA (DATE)''.

39. Section 1832.970 is revised to read as follows:

1832.970 Payments to Canadian Commercial Corporation.

Pursuant to the authority of FAR 32.904(a)(3), invoice and contractor financing payments for contracts (other than Fixed-Price Architect-Engineer Contracts, Construction Contracts, and contracts for meats, perishables and dairy products) with the Canadian Commercial Corporation (CCC) shall be made earlier than the standard contract payment due dates. Accordingly, the phrase ''the 17th day'' shall be used in lieu of the ''the 30th day'' at FAR 32.905(a)(1) and 32.906(a).

PART 1836—CONSTRUCTION AND ARCHITECT-ENGINEER CONTRACTS

1836.213, 1836.213–3, 18213–70, 1836.213–7 [Added]

40. Sections 1836.213, 1836.213–3, 1836.213–70, and 1836.213–4 are added to read as follows:

1836.213 Special procedures for sealed bidding in construction contracting.

1836.213–3 Invitations for bids.

1836.213–70 Additive and deductive items.

When it appears that funds available for a project may be insufficient for all the desired features of construction, the contracting officer may provide in the invitation for bids for a first or base bid item covering the work generally as specified and one or more additive or deductive bid items progressively adding or omitting specified features of the work in a stated order of priority. In such case, the contracting officer, before the opening of bids, shall record in the contract file the amount of funds available for the project and determine the low bidder and the items to be awarded in accordance with the provision at 1852.236–71, Additive or Deductive Items.

1836.213–4 Notice of Award. (NASA supplements paragraph (e))

(e) Contract delivery or performance schedules, commencement of work, or notices to proceed shall not be expressed in terms of a notice of award. (See 1814.408–1).

Subpart 1836.3—[Removed]

41. Subpart 1836.3 is removed.

PART 1837—SERVICE CONTRACTING

1837.110–70 [Amended]

42–43. In paragraph (c) to section 1837.110–70, delete the words ''level-of-effort''.

PART 1839—ACQUISITION OF INFORMATION TECHNOLOGY

1839.106, 1836.106–70 [Redesignated]

44. Sections 1839.106 and 1839.106–70 are redesignated as 1839.107 and 1839.107–70, respectively.

PART 1842—CONTRACT ADMINISTRATION

1842.7202 [Revised]

45. Section 1842.7202 is revised to read as follows:

1842.7202 Contract clause.

The contracting officer shall insert the clause at 1852.242–73, NASA Contractor Financial Management Reporting, in solicitations and contracts when any of the NASA Form 533 series of reports is required from the contractor.

PART 1844—SUBCONTRACTING POLICIES AND PROCEDURES

1844.302–70 [Amended]

46. Paragraph (a) to section 1844.302–70 is revised to read as follows:

1844.302–70 DCMC-conducted contractor purchasing system reviews.

* * * * *

(a) Verifying that CPSRs are being conducted in accordance with FAR 44.302.

* * * * *

47. Part 1845 is revised to read as follows:

PART 1845—GOVERNMENT PROPERTY

Subpart 1845.1—General

Sec.
1845.102 Policy.
1845.102–70 NASA policy.
1845.102–71 Solicitation and review procedures.
1845.104 Review and correction of contractors' property control systems.
1845.106 Government property clauses.
1845.106–70 NASA contract clauses and solicitation provision.
1845.106–71 Plant reconversion and plant clearance.

Subpart 1845.3—Providing Government Property to Contractors

1845.301 Definitions.
1845.302 Providing facilities.
1845.302–1 Policy.
1845.302–2 Facilities contracts.
1845.302–70 Securing approval of facilities projects.
1845.302–71 Determination and findings.

Subpart 1845.4—Contractor Use and Rental of Government Property

1845.402 Authorizing use of Government production and research property.
1845.403 Rental—Use and Charges clause.
1845.405 Contracts with foreign governments or international organizations.
1845.405–70 NASA procedures.
1845.406 Use of Government production and research property on independent research and development programs.
1845.406–70 NASA policy.
1845.407 Non-Government use of plant equipment.

Subpart 1845.5—Management of Government Property in the Possession of Contractors

1845.502 Contractor responsibility.
1845.502–1 Receipts for Government property.
1845.502–70 Contractor-acquired property.
1845.505 Records and reports of Government property.
1845.505–14 Reports of Government property.
1845.508 Physical inventories.

Subpart 1845.6—Reporting, Redistribution, and Disposal of Contractor Inventory

1845.604 Restrictions on purchase or retention of contractor inventory.
1845.606 Inventory schedules.
1845.606–1 Submission.
1845.607 Scrap.
1845.607–1 General.
1845.607–170 Contractor's approved scrap procedure.
1845.607–2 Recovering precious metals.
1845.608 Screening of contractor inventory.
1845.608–1 General
1845.608–6 Waiver of screening requirements.
1845.610 Sale of surplus contractor inventory.
1845.610–3 Proceeds of sale.
1845.610–4 Contractor inventory in foreign countries.
1845.613 Property disposal determinations.
1845.615 Accounting for contractor inventory.

Subpart 1845.70—[Reserved]

Subpart 1845.71—Forms Preparation

1845.7101 Instructions for preparing NASA Form 1018.
1845.7101–1 Property classification.
1845.7101–2 Transfers of property.
1845.7101–3 Computing costs of fabricated special tooling, special test equipment, agency-peculiar property and contract work in process.
1845.7101–4 Types of deletions from contractors property records.
1845.7101–5—Contractor's privileged financial and business information.
1845.7102 Instructions for preparing DD Form 1419.

Subpart 1845.72—Contract Property Management

1845.7201 Definitions.
1845.7202 General.
1845.7203 Delegations of property administration and plant clearance.
1845.7204 Retention of property administration and plant clearance.
1845.7205 Functional oversight of property administration and plant clearance.
1845.7206 Responsibilities of property administrators and plant clearance officers.
1845.7206–1 Property administrators.
1845.7206–2 Plant clearance officers.
1845.7207 Declaration of excess property.
1845.7208 Closure of contracts.
1845.7208–1 Completion or termination.
1845.7208–2 Final review and closing of contracts.
1845.7209 Special subjects.
1845.7209–1 Government property at alternate locations of the prime contractor and subcontractor plants.
1845.7209–2 Loss, damage, or destruction of Government property.
1845.7209–3 Loss, damage, or destruction of Government property while in contractor's possession or control.
1845.7209–4 Financial reports.
1845.7210 Contractor utilization of Government property.
1845.7210–1 Utilization surveys.
1845.7210–2 Records of surveys.

Authority: 42 U.S.C. 2473(c)(1).

Subpart 1845.1—General

1845.102 Policy.

1845.102–70 NASA policy.

Government property shall not be provided to contractors unless all other alternatives are not feasible. The decision to provide Government property to contractors (whether Government-furnished or contractor-acquired) shall be made only after careful consideration of all relevant factors. Among these factors are the following:

(a) Providing Government property to contractors increases the Government's administrative burden and requires recordkeeping and personnel.

(b) Providing property may dilute the contractor's overall responsibility and weaken guarantees, end-item delivery requirements, and other contract terms.

(c) Providing property may make NASA responsible for delays in that the Agency assumes responsibility for scheduling delivery of the property.

1845.102–71 Solicitation and review procedures.

(a) Each solicitation, as applicable, shall include the following:

(1) A list of any Government property available to be furnished, quantities, locations, conditions, and any related information.

(2) A requirement that offerors identify any Government property in their possession proposed for use during contract performance. The items, quantities, locations, acquisition costs, and proposed rental terms must be provided, along with identification of the Government contract under which the property is accountable.

(3) A requirement that requested Government provided facilities be described and identified by the classifications in 1845.7101–1.

(4) A requirement that offerors provide, if applicable, the date of the last Government property control system review, a summary of the findings and recommendations, and contractor corrective actions taken.

(b) The contracting officer shall provide a copy of the solicitation (or contract if no solicitation is used) to the center supply and equipment management officer (SEMO) for review for acquisitions with an estimated cost greater than $1,000,000, or for acquisitions over $50,000 when work is to be performed at the center, existing Government property is being furnished, or contract acquisition of Government property is required or permitted.

1845.104 Review and correction of contractors' property control systems. (NASA supplements paragraph (a))

(a) Property administration is normally delegated to DOD. When property administration is not delegated to DOD, NASA shall conduct the review of the contractor's property administration system in accordance with DOD 4161.2–M, Manual for the Performance of Contract Property Administration.

1845.106 Government property clauses. (NASA supplements paragraph (b))

(b) If NASA contemplates taking title to contractor acquired property under paragraph (c) of the clause at FAR 52.245–2, Government Property (Fixed-Price Contracts), the contracting officer shall list the applicable property in the contract as deliverable items.

1845.106–70 NASA contract clauses and solicitation provision.

(a) The contracting officer shall insert the clause at 1852.245–70, Contractor Requests for Government-Owned Equipment, in all solicitations and contracts that have the potential for contractor acquisition of equipment for the account of the Government that is not listed as a specific contract deliverable. See 1845.7102 for instructions on preparing DD Form 1419.

(b)(1) The contracting officer shall insert the clause at 1852.245–71, Installation-Accountable Government Property, in solicitations and contracts when Government property is to be made available to a contractor working on a NASA installation, and the Government will maintain accountability for the property. The contracting officer shall list in the clause the applicable property user responsibilities. For purposes of this clause, NASA installations include local off-site buildings owned or directly leased by NASA when the contractor does not have authority to acquire property for the account of the Government.

(2) Use of this clause is subject to the SEMO's concurrence that adequate installation property management resources are available for oversight of the property in accordance with all applicable NASA installation property management directives.

(3) The contracting officer shall identify in the contract the nature, quantity, and acquisition cost of such property and make the property available on a no-charge basis.

(4) The contracting officer shall use the clause with its Alternate I if the SEMO requests that the contractor be restricted from use of the center central receiving facility for the purposes of receiving contractor-acquired property.

(5) Contracting officers shall list separately in the contract any property provided under a FAR 52.245 Government property clause that remains accountable to the contractor during its use on the contract (such as property used at the contractor's or a subcontractor's off-site facility) and which is not also subject to the clause at 1852.245–71. The contracting officer shall address any specific maintenance considerations (e.g., requiring or precluding use of an installation calibration or repair facility) elsewhere in the contract.

(6) See 1845.106–70(e).

(c) The contracting officer shall insert the clause at 1852.245–72, Liability for Government Property Furnished for Repair and Services, in fixed-price solicitations and contracts (except for experimental, developmental, or research work with educational or nonprofit institutions, where no profit is contemplated) for repair, modification, rehabilitation, or other servicing of Government property, if such property is to be furnished to a contractor for that purpose and no other Government property is to be furnished. The contracting officer shall not require additional insurance under the clause unless the circumstances clearly indicate advantages to the Government.

(d) The contracting officer shall insert the clause at 1852.245–73, Financial Reporting of NASA Property in the Custody of Contractors, in cost reimbursement contracts unless all property to be provided is subject to the clause at 1852.245–71, Installation-Accountable Government Property. The clause shall also be included in other types of contracts when it is known at award that property will be provided to the contractor or that the contractor will acquire property title to which will vest in the Government prior to delivery.

(e) When approved by the Logistics Management Office of the Headquarters Office of Management Systems and Facilities (Code JLG), the contracting officer shall insert the clause at 1852.245–74, Contractor Accountable On-Site Government Property, in lieu of the clause at 1852.245–71, in solicitations and contracts when accountability rests with an on-site contractor. The contracting officer's written request for approval shall include a determination of costs that will be (1) avoided (e.g., additional costs to the installation's property management systems and staffing) and (2) incurred (e.g., reimbursable costs of the contractor to implement, staff, and operate separate property management systems on-site, and resources needed for performance of, or reimbursement for, property administration) under contractor accountability.

(f) The contracting officer shall insert the clause at 1852.245–75, Title to Equipment, in solicitations and contracts where the clause at FAR 52.245–2 with its Alternate II or 52.245–5, with its Alternate I is used.

(g) The contracting officer shall insert the clause at 1852.245–76, List of Government-Furnished Property, in solicitations and contracts if the contractor is to be accountable under the contract for Government property.

(h) The contracting officer shall insert the clause at 1852.245–77, List of Installation-Accountable Property and Services, in solicitations and contracts that require performance at the center and authorize contractor use of property within the physical borders of the center.

(1) The contracting officer shall insert the provision at 1852.245–79, Use of Government-Owned Property, in all solicitations when Government property may be used by the contractor.

(j) The contracting officer shall insert the clause at 1852.245–80, Use of Government Production and Research Property on a No-Charge Basis, in solicitations and contracts when government property (real property, commercially available equipment, special test equipment, or special tooling) accountable under another contract(s) is authorized for use.

1845.106–71 Plant reconversion and plant clearance.

The Associate Administrator for Procurement (Code HS) is the approval authority for any solicitation provision or contract clause that would defer negotiation of costs for plant reconversion plant clearance until after award.

Subpart 1845.3—Providing Government Property to Contractors

1845.301 Definitions.

Facilities, as defined in the FAR, also include real property and commercially available equipment, whether owned or leased by NASA or reimbursed as a cost under the contract.

Provide, as used in this subpart in such phrases as ''Government property provided to the contractor'' and ''Government-provided property,'' means either to furnish, as in ''Government-furnished property,'' or to permit to be acquired, as in ''contractor-acquired property.'' See FAR 45.101 for definitions of ''contractor-acquired property'' and ''Government-furnished property.''

1845.302 Providing facilities.

1845.302–1 Policy. (NASA supplements paragraph (a))

(a) In addition to the exceptions listed in FAR 45.302–1(a), existing NASA-owned facilities (whether contractor acquired or government furnished) being used by a contractor may be retained for the remainder of the contract period and furnished under any

follow-on contract for the same effort if the contracting officer determines that to do so would be in the best interest of the Government, provided that:

(i) The facilities are required to accomplish the purpose of the contract;

(ii) The contract contains a provision requiring the contractor to replace any of the facilities that reach the end of their useful life during the contract period, or which are beyond economical repair, if the facilities are still needed for contract performance. Such replacements shall be made with contractor-owned facilities. The contract provision shall also expressly prohibit contractor acquisitions of facility items for the Government, unless specifically authorized by the contract or consent has been obtained in writing from the contracting officer pursuant to FAR 45.302–1(a);

(iii) Consideration has been given to any alternative uses by Government personnel within the agency, in consultation with the center industrial property officer; and

(iv) The contracting officer documents the file with a detailed explanation of why continued furnishing of the facilities is in the best interest of the Government.

(a)(4)(A) The procurement officer is designated to make the determinations and findings (D&F) authorizing the use of Government facilities. See 1845.302–71 for D&F format.

(B) The requirements for a D&F and a prospective contractor's written statement asserting inability to obtain facilities are not applicable in the circumstances listed under FAR 45.302–1(d). In these cases, the contracting officer shall document the contract file with the rationale for providing the facilities, including the reason for not requiring the contractor to provide them.

1845.302–2 Facilities contracts.

Unless termination would be detrimental to the Government's interests, contracting officers shall terminate facilities contracts when the Government property is no longer required for the performance of Government contracts or subcontracts. Contracting officers shall not grant the contractor the unilateral right to extend the time during which it is entitled to use the property provided under the facilities contract.

1845.302–70 Securing approval of facilities projects.

(a) Pursuant to NMI 7330.1, Delegation of Authority—Approval Authorities for Facility Projects, the contracting officer must approve facilities projects involving leasing, construction, expansion, modification, rehabilitation, repair, or replacement of real property.

(b) The contracting officer's written authorization is required before any change is made in the scope or estimated cost of any facilities project.

1845.302–71 Determination and findings.

(a) Procedure. Determination and findings (D&F) required under FAR 45.302–1(a)(4) and 1845.302–1(a)(4) shall be prepared by the contracting officer and approved by the procurement officer. Prior to approval, concurrence must be obtained from the SEMO to ensure agreement on the use of the government facilities by the contractor. D&Fs shall address individual types of facilities to be provided to the contractor. Reference to specific variations in quantities of items to be provided should be included in the D&F if additional requirements are anticipated. A separate D&F is required before adding new types of items or significant changes in quantity or before adding any new work to the contract that requires additional Government facilities.

(b) Format. A sample format follows:

National Aeronautics and Space Administration, Washington, DC 20546

Determination and Findings

Decision To Provide Government Facilities

On the basis of the following findings and determinations, Government-owned facilities may be provided to [insert the name of the contractor] pursuant to the authority of FAR 45.302–1(a)(4).

Findings

1. The [insert the name of the contracting activity] and the contractor (have entered)/(proposed to enter) into Contract No. [Insert the contract number]. (Include the following information: Type of contract, contract value, and a brief description of the scope of work performed under the contract.)

2. (Justify that Government facilities are needed for performance under the contract. The justification shall demonstrate either (i) that the contract cannot be fulfilled by any other means, or (ii) that it is in the public interest to provide the facilities. It is imperative that the justification be fully substantiated by evidence.)

3. (If the contract effort cannot be fulfilled by any other means, indicate why the contractor cannot provide the facilities. For example, due to financial constraints, the contractor will replace the Government facilities with contractor-owned facilities. Address leadtime, validate the contractor's claims, and state that private financing was sought and either not available or not advantageous to the Government. If private financing was not advantageous to the Government, provide justification. Indicate other alternatives considered and reasons for rejection.)

4. (Describe the types of facilities to be provided and any variation in quantities of items based on functional requirements. Explain how these facilities pertain to the scope of work to be completed. State that the contract cannot be accomplished without the specified facility items being provided. Include an estimate of the value of the facilities and a statement that no facilities items under $10,000 unit cost will be provided unless the contractor is a nonprofit, on-site, or the facilities are only available from the Government.

5. (Indicate whether the property will be accountable under this contract or a separate facilities contract.)

Determination

For the reasons set forth above, it is hereby determined that the Government-owned facilities identified herein will be provided to the contractor.

Procurement Officer _____

Date _____

Subpart 1845.4—Contractor Use and Rental of Government Property

1845.402 Authorizing use of Government production and research property. (NASA supplements paragraph (a))

(a)(i) A NASA contracting officer desiring to authorize use of Government property under the cognizance of another contracting officer shall obtain that contracting officer's concurrence.

(ii) NASA contracting officers having cognizance over NASA property may authorize its use on contracts of other agencies if such use will not interfere with NASA's primary purpose for the property and will not extend beyond the expected expiration or completion date of the NASA contract.

1845.403 Rental—Use and Charges clause. (NASA supplements paragraph (a))

(a) The Center Director is designated as the authority to make the determinations on modified rental rates.

1845.405 Contracts with foreign governments or international organizations.

1845.405–70 NASA procedures.

(a) NASA policy is to recover a fair share of the cost of Government production and research property if such property is used in performing services or manufacturing articles for foreign countries or for international organizations.

(b) The prior written approval of the Associate Administrator for Procurement (Code H) is required for the use of Government production and research property on work for foreign

countries or for international organizations. The Logistics Management Office of the Headquarters Offices of Management Systems and Facilities (Code JLG), the Office of General Counsel (Code G), and the International Planning and Programs Branch of the Headquarters Office of External Relations (Code IRD) are required concurrences.

(c) Contracting officers shall forward requests for approval to Code HS, along with a summary of the circumstances involved, including as a minimum—

(1) The name of the requesting contractor;

(2) The number of the contract under which the equipment is controlled;

(3) A description of the equipment;

(4) The name of the foreign contractor and the relationship of the foreign contractor to its government or to any international organization;

(5) A description of the articles to be manufactured or services to be performed;

(6) A statement that the intended use will not interfere with the current or foreseeable requirements of the United States or require use of the equipment beyond the expected expiration or completion date of the NASA contract;

(7) A statement that the use of Government property is consistent with the best interests of the United States;

(8) A statement that such use is legally authorized; and

(9) Any evidence of endorsement by another agency of the U.S. Government based on national security or foreign policy of the United States.

(d) Use, if approved, shall be subject to rent in accordance with FAR 45.403.

1845.407 Use of Government production and research property on independent research and development programs.

1845.406–70 NASA policy.

The contracting officer should not authorize contractor use of Government property for independent research and development on a rent-free basis except in unusual circumstances when it has been determined by the contracting officer that—

(a) Such use is clearly in the best interests of the Government (for example, the project can reasonably be expected to be of value in specific Government programs); and

(b) No competitive advantage will accrue to the contractor through such use (see FAR 45.201).

1845.406 Non-Government use of plant equipment. (NASA supplements paragraph (a)).

For NASA, the coverage in FAR 45.407, applies to all equipment, not just plant equipment.

(a)(i) The Associate Administrator for Procurement (Code HS) is the approval authority for non-Government use of equipment exceeding 25 percent.

(ii) The percentage of Government and non-Government use shall be computed on the basis of time available for use. For this purpose, the contractor's normal work schedule, as represented by scheduled production shift hours, shall be used. All equipment having a unit acquisition cost of less than $25,000 at any single location may be averaged over a quarterly period. Equipment having a unit acquisition cost of $25,000 or more shall be considered on an item-by-item basis.

(iii) Approval for non-Government use of less than 25 percent shall be for a period not exceeding 1 year. Approval for non-Government use in excess of 25 percent shall not be for less than 3 months.

(iv) Requests for the approval shall be submitted to Code HS at least 6 weeks in advance of the projected use and shall include—

(A) The number of equipment items involved and their total acquisition cost; and

(B) An itemized listing of equipment having an acquisition cost of $25,000 or more, showing for each item the nomenclature, year of manufacture, and acquisition cost.

Subpart 1845.5—Management of Government Property in the Possession of Contractors

1845.502 Contractor responsibility.

1845.502–1 Receipts for Government property.

Receipts for Government property shall comply with the instructions for preparing NASA Form 1018, NASA Property in the Custody of Contractors (see 1845.7101).

1845.502–70 Contractor-acquired property.

All contractor-acquired property must be authorized by the contract and is subject to a determination by the contracting officer that it is allocable to the contract and reasonably necessary. The acquisition (and fabrication) of Government property is further subject to the following conditions, depending on category of property:

(a) Facilities.

(1) Prior contracting officer approval, if the facilities are not already specifically described in the contract as contractor-acquired.

(2) Submission of DD Form 1419, DOD Industrial Plant Requisition, or equivalent format, and return of Certificate of Nonavailability.

(3) Submission of the written statement prescribed by FAR 45.302–1(a)(4).

(b) Special test equipment.

(1) Contracting officer approval 30 days in advance if the equipment is not identified in the solicitation or contract.

(2) Submission of DD Form 1419, or equivalent format, and return of Certificate of Nonavailability.

(c) Special tooling.

(1) If the contract contains a Subcontracts clause, advance notification to the contracting officer and contracting officer consent if required by that clause.

(2) If the contract is a fixed-price contract, submission of the list to the contracting officer within 60 days after delivery of the first production end items (or later as prescribed by the contracting officer), unless the tooling is already identified in the solicitation.

(3) Submission of DD Form 1419 or equivalent format and return of Certificate of Nonavailability.

(d) Material. If the contract contains a Subcontracts clause, advance notification to the contracting officer and contracting office consent if required by that clause.

(e) Agency-peculiar property.

(1) If the contract contains a Subcontracts clause, advance notification to the contracting officer and contracting officer consent if required by that clause.

(2) Submission of DD Form 1419, or equivalent format, and return of Certificate of Nonavailability.

1845.505 Records and reports of Government property.

1845.505–14 Reports of Government property. (NASA supplements paragraphs (b))

(b) When the clause at 1852.245–73, Financial Reporting of NASA Property in the Custody of Contractors, is included in the contract, the contractor shall submit NASA Form 1018, NASA Property in the Custody of Contractors, in accordance with the instructions on the form and 1845.71. Contractor property control systems shall distinguish between Government furnished and contractor acquired property for purposes of reporting the acquisition cost in the property classifications shown in FAR 45.505–14(a) (1) through (5).

1845.508 Physical inventories.

NASA contractors shall reconcile inventories with the official property records and submit reports to the property administrator within 30 days

after inventory completion. The contractor shall investigate all losses of property and discoveries of unrecorded property to determine the causes of the discrepancy and actions needed to prevent its recurrence.

Subpart 1845.6—Reporting, Redistribution, and Disposal of Contractor Inventory

1845.604 Restrictions on purchase or retention of contractor inventory.

(1) No contractor may sell contractor inventory to persons known by it to be NASA or DOD personnel who have been engaged in administering or terminating NASA contracts.

(2)(i) The contractor's or subcontractor's authority to approve the sale, purchase, or retention of Government property on a contract which is excess to needs after Government reutilization screening at less than cost by a subcontractor, and the subcontractor's authority to sell, purchase, or retain such property at less than cost with the approval of the contractor or next higher-tier subcontractor does not include authority to approve—

(A) A sale by a subcontractor to the contractor, the next higher-tier subcontractor, or their affiliates; or

(B) A sale, purchase, or retention by a subcontractor affiliated with the contractor or next higher-tier subcontractor.

(ii) Each excluded sale, purchase, or retention requires the written approval of the plant clearance officer.

1845.606 Inventory schedules.

1845.606–1 Submission.

See 1845.608 for intra-agency screening of excess contractor-held property.

1845.607 Scrap.

1845.607–1 General.

1845.607–170 Contractor's approved scrap procedure.

(a) When a contractor has an approved scrap procedure, certain property may be routinely disposed of in accordance with that procedure and not processed under this section.

(b) The center property administrator is authorized to approve the contractor's scrap procedure. Before approval, the plant clearance officer shall review the procedure, particularly regarding sales. The plant clearance officer shall ensure that the procedure contains adequate requirements for inspecting and examining items to be disposed of as scrap. When the contractor's procedure does not require physical segregation of Government-owned scrap from contractor-owned scrap and separate disposal, care shall be exercised to ensure that a contract change that generates a large quantity of property does not result in an inequitable return to the Government. In such a case, the property administrator shall make a determination as to whether separate disposition of Government scrap would be appropriate.

(c) A plant clearance case shall not be established for property disposed of through the contractor's approved scrap procedure.

(d) Property in scrap condition, other than that disposed of through the contractor's approved scrap procedure, shall be reported on appropriate inventory schedules for disposition in accordance with the provisions of FAR Part 45 and 1845.

1845.607–2 Recovering precious metals. (NASA supplements paragraph (b)).

(b) Silver, gold, platinum, palladium, rhodium, iridium, osmium, and ruthenium; scrap bearing such metals; and items containing recoverable quantities of them shall be reported to the Defense Reutilization and Marketing Service, DRMS–R, Federal Center, Battle Creek, MI 49017–3092, for instructions regarding disposition.

1845.608 Screening of contractor inventory.

1845.608–1 General. (NASA supplements paragraphs (a))

(a) Property Disposal Officers (PDOs) are the center focal points for intra-agency reutilization screening. PDOs shall acknowledge receipt of inventory schedules within 30 days and simultaneously provide the plant clearance officer a NASA screening completion/release date. Screening shall be accomplished in accordance with NHB 4300.1.

1845.608–6 Waiver of screening requirements.

The Director of the Logistics Management Office of the Headquarters Office of Management Systems and Facilities (Code JLG) is designated to authorize exceptions to intra-agency screening requirements.

1845.610 Sale of surplus contractor inventory.

1845.610–3 Proceeds of sale.

The plant clearance officer shall maintain an open suspense record until verifying that credit has been applied, unless another Government representative has specifically assumed this responsibility.

1845.610–4 Contractor inventory in foreign countries.

NASA procedures for disposal are in NHB 4300.1.

1845.613 Property disposal determinations.

The center property disposal officer (PDO) shall review the determinations in accordance with NHB 4300.1.

1845.615 Accounting for contractor inventory.

A copy of Standard Form 1424, Inventory Disposal Report, shall be provided to the center industrial property officer or the PDO.

Subpart 1845.70—[Reserved]

Subpart 1845.71—Forms Preparation

1845.7101 Instructions for preparing NASA Form 1018.

NASA Form 1018 (see 1853.3) provides information for NASA financial statements and property management. Accuracy and timeliness of the report are, therefore, very important. Contractors shall retain documents which support the data reported on NF 1018 in accordance with FAR subpart 4.7, Contractor Records Retention. Classifications of property, related costs to be reported, and reporting requirements are set forth in this subpart.

1845.7101–1 Property classification.

(a) Contractors shall report costs in the classifications required on NF 1018, as described in this section. For Land, Buildings, Other Structures and Facilities, and Leasehold Improvements, contractors shall report the amount for all items with a unit cost of $5,000 or more and a useful life of 2 years or more. For Plant Equipment, Special Tooling, Special Test Equipment and Agency-Peculiar Property, contractors shall separately report:

(1) the amount for all items with a unit cost of $5,000 or more and a useful life of 2 years or more, and

(2) all items under $5,000, regardless of useful life.

(b) Contractors shall report the amount for all Materials, regardless of unit costs.

(c) *Land*. Includes costs of land, improvements to land, and associated costs incidental to acquiring and preparing land for use. (for example; appraisal fees, clearing costs, drainage, grading, landscaping, plats and surveys, removal and relocation of the property of others as part of a land purchase, removal or destruction of structures or facilities purchased but not used, and legal expenses).

(d) *Buildings*. Includes costs of buildings, improvements to buildings, and fixed equipment required for the operation of a building which is permanently attached to and a part of the building and cannot be removed without cutting into the walls, ceilings, or floors. Examples of fixed equipment required for the functioning of a building include plumbing, heating and lighting equipment, elevators, central air conditioning systems, and built-in safes and vaults.

(e) *Other structures and facilities*. Includes costs of acquisitions and improvements of structures and facilities other than buildings; for example, airfield pavements, harbor and port facilities, power production facilities and distribution systems, reclamation and irrigation facilities, flood control and navigation aids, utility systems (heating, sewage, water and electrical) when they serve several buildings or structures, communication systems, traffic aids, roads and bridges, railroads, monuments and memorials, and nonstructural improvements, such as sidewalks, parking areas, and fences.

(f) *Leasehold improvements*. Includes costs of improvements to leased buildings, structures, and facilities, as well as easements and right-of-way, where NASA is the lessee or the cost is charged to a NASA contract.

(g) *Equipment*. Includes cost of commercially available personal property for use in manufacturing supplies, performing services, or any general or administrative purpose (for example, machine tools, furniture, vehicles, computers, accessory or auxiliary items, and test equipment).

(h) *Construction in Progress*. Includes costs for work in process for the construction of Buildings, Other Structures and Facilities, and Leasehold Improvements to which NASA has title.

(i) *Special Tooling*. Includes costs of equipment and manufacturing aids (and components and replacements of these items) that are of such a specialized nature that, without substantial modification or alteration, their use is limited to the development or production of particular supplies or parts, or to the performance of particular services. Examples include jigs, dies, fixtures, molds, patterns, taps and gauges.

(j) *Special Test Equipment*. Includes costs of equipment used to accomplish special purpose testing in performing a contract, and items or assemblies of equipment.

(k) *Material*. Includes costs of NASA owned property held in inventory that may become a part of an end item or be expended in performing a contract. Examples include raw and processed material, parts, assemblies, small tools and supplies. Does not include material that is part of work in process.

(l) *Agency-Peculiar Property*. Includes actual or estimated costs of completed items, systems and subsystems, spare parts and components unique to NASA aeronautical and space programs. Examples include aircraft, engines, satellites, instruments, rockets, prototypes and mock-ups. The amount of property, title to which vests in the Government as a result of progress payments to fixed price subcontractors, shall be included to reflect the pro rata cost of undelivered agency-peculiar property.

(m) *Contract Work-in-Process*. Includes the costs of all work-in-process and excludes the costs of completed items reported in other categories.

1845.7101–2 Transfers of property.

A transfer is a change in accountability between and among prime contracts, centers, and other Government agencies (e.g., between contracts of the same installation, contracts of different installation, a contract of one installation to that of another installation, an installation to a contract of another installation, and a contract to another Government agency or its contract). So that NASA may properly control and account for transfers, they shall be adequately documented. Therefore, procurement, property, and financial organizations at NASA Centers must effect all transfers of accountability, although physical shipment and receipt of property may be made directly by contractors. The procedures described in this section shall be followed in all cases, to provide an administrative and audit trail, even if property is physically shipped directly from one contractor to another. Property shipped between September 1 and September 30, inclusively, shall be reported by the shipping contractor, regardless of the method of shipment, unless written evidence of receipt at destination has been received. Repairables provided under fixed price repair contracts that include the clause at 1852.245–72, Liability for Government Property Furnished for Repair or Other Services, remain accountable to the cognizant center and are not reportable on NF 1018; repairables provided under a cost-reimbursement contract, however, are accountable to the contractor and reportable on NF 1018. All materials provided or conduct repairs are reportable, regardless of contract type.

(a) *Approval and Notification*. The contractor must obtain the approval of the contracting officer or designee for transfers of property before shipment. Each shipping document must contain contract numbers, shipping references, property classifications in which the items are recorded, unit prices, and any other appropriate identifying or descriptive data. Unit prices shall be obtained from records maintained pursuant to FAR part 45 and 1845. Shipping contractors shall furnish a copy of the shipping document to the cognizant property administrator. Shipping and receiving contractors shall promptly notify the financial management office of the NASA center responsible for their respective contracts when accountability for Government property is transferred to, or received from, other contracts, contractors, NASA centers or Government agencies. Copies of shipping or receiving documents will suffice as notification in most instances.

(b) *Reclassification*. If property is transferred to another contract or contractor, the receiving contractor shall record the property in the same property classification and amount appearing on the shipping document. For example, when a contractor receives an item from another contractor that is identified on the shipping document as equipment, but that the recipient intendes to incorporate into special test equipment, the recipient shall first record the item in the equipment account and subsequently reclassify it as special test equipment. Reclassification of equipment, special tooling, special test equipment, or agency-peculiar property requires prior approval of the contracting officer or a designee.

(c) *Incomplete documentation*. If contractors receive transfer documents having insufficient detail to properly record the transfer (e.g., omission of property classification, unit prices, etc.) they shall request the omitted data directly from the shipping contractor or through the property administrator as provided in FAR 45.505–2.

1845.7101–3 Computing costs of fabricated special tooling, special test equipment, agency-peculiar property and contract work in process

(a) Costs of fabricated special tooling, special test equipment, agency-peculiar property and contract work in process shall be computed in accordance with accepted accounting principles, be reasonably accurate, and be the product of any one or a combination of, the following:

(1) Abstracts of cost data from contractor property or financial records.

(2) Computations based on engineering and financial data.

(3) Estimates based on NASA Form 533 reports.

(4) Formula procedures (e.g., using a 50 percent factor for work in process items, on the basis of updated Standard Form 1411 estimates or the contractor's approved estimating and pricing system).

(5) Other approved methods.

(b) Contractors shall report costs using records that are part of the prescribed property or financial control system as provided in this section. Fabrication costs shall be based on approved systems or procedures and shall include all direct and indirect costs of fabricating Government property.

(c) The contractor shall redetermine the costs of items returned for modification or rehabilitation.

(d) The computation of work in process shall include the costs of associated systems, subsystems, and spare parts and components furnished or acquired and charged to work in process pending incorporation into a finished item. These types of items make up what is sometimes called production inventory and include programmed extra units to cover replacement during the fabrication process (production spares). Also included are deliverable items on which the contractor or a subcontractor has begun work, and materials that have been issued from inventory.

1845.7101–4 Type of deletions from contractor property records.

Contractors shall report the types of deletions from contract property records as described in this section.

(a) *Adjusted.* Changes in the deletion amounts, if any, that result from mathematical errors in the previous report.

(b) *Lost, Damaged or Destroyed.* Deletion amounts as a result of relief from responsibility under FAR 45.503 granted during the reporting period.

(c) *Transferred in Place.* Deletion amounts that result from a transfer of property to a follow-up contract with same contractor.

(d) *Transferred to Center Accountability.* Deletion amounts that result from transfer of accountability to the center responsible for the contract, whether or not the items are physically moved.

(e) *Transferred to Another NASA Center.* Deletion amounts caused by transfer of accountability to a center other than the one responsible for the contract, whether or not the items are physically moved.

(f) *Transferred to Another Government Agency.* Deletion amounts that result from transfer of property to another Government agency.

(g) *Purchased at Cost/Returned for Credit.* Deletion amounts due to contractor purchase or retention of contractor acquired property as provided in FAR 45.605–1; or to contractor returns to suppliers under FAR 45.605–2.

(h) *Disposal Through Plant Clearance Process.* Deletions other than transfers; e.g., donations to eligible recipients, sold at less than cost, or abandoned/directed destruction.

1845.7101–5 Contractor's privileged financial and business information.

If a transfer of property between contractors will involve disclosing costs of a proprietary nature, the contractor shall furnish unit prices only on those copies of the shipping documents that are sent to the shipping and receiving NASA installations. Transfer of the property to the receiving contractor shall be on a no-cost basis.

1845.7102 Instructions for preparing DD Form 1419.

(a) The contractor shall enter the essential information covering Sections I and II before submission of DD Form 1419, DOD Industrial Plant Equipment Requisition, to the Industrial Property Officer (IPO). The IPO shall review each submission for completeness and authenticity. Incomplete or invalid requests shall be returned for correction.

(b) When a suitable item is allocated in Section IV, inspection of the equipment is recommended. Notification of acceptance or rejection of the item offered must reach NASA within 30 days after allocation. A copy of the DD Form 1419, or equivalent format, will serve as the clearance document to inspect the equipment at the storage site. Note acceptance or rejection of the item, without inspection or after inspection in Section VI. If the item is acceptable, execute Section VII. Cite the NASA appropriation symbol where applicable in Section VII.

(c) The IPO shall assign a requisition number to each DD Form 1419, or equivalent format request.

(d) Next will be a four-digit entry comprised of the last digit of the current calendar year and the Julian date of the year. For example, April 15, 1997, would be written as 7095 (April 15 being the 95th day of the year). The last entry will be a four-digit number from 0001 to 9999 to sequentially number requisition forms prepared on the same date. For example, the ninth requisition prepared on April 15, 1997, would be 7095–0009, preceded by the FEDSTRIP/MILSTRIP Activity Address Code. When submitting subsequent DD Forms 1419, or equivalent format, related to the item requested, the IPO shall use the same requisition number and add the alpha code to the end of the requisition number to indicate a second or third action on the basic request. Alpha ''A'' would indicate a second request, ''B'' a third, etc. In this manner, all actions, correspondence, etc., relative to a given request can be identified at all levels of processing by the use of the requisition number.

(e) Detailed directions for completing the DD Form 1419 follow. The contractor may elect to provide the required data in an equivalent format, which complies with these directions.

Section I

Item Description. To ensure adequate screening, the item description must be complete. For single-purpose equipment or general-purpose equipment with special features, requests must contain detailed descriptive data as to size and capacities, setting forth special operating features or particular operations required to be performed by the item.

Block 1. Not applicable.

Block 2. Enter the manufacturer's name and Federal Supply Code for manufacturer (Cataloging Handbook H4–1) of the item requested.

Block 3. Enter the manufacturer's model style, or catalog number assigned to the equipment being requisitioned. Always use the model number, if available. The style number is the next preference. Enter ''None'' in this block if the model, style or catalog number is not known.

Block 4. Enter the first four digits of the National Stock Number, if known.

Block 5. Not applicable.

Block 6. Self-explanatory.

Block 7. Place an ''X'' in the applicable block to indicate whether you desire to physically inspect the item before acceptance.

Block 8. Self-explanatory.

Block 9. Enter the complete description of the item. Continue the description in Block 53 if additional space is needed.

Section II

Block 10. Enter the contractor's name, street address, city, state, and zip code from which the requisition is being initiated. The address should be the one to which inquiries of a technical nature will be referred. Specify the telephone number of an individual who will respond to inquiries concerning the request.

Block 11. Enter the contract number or document number authorizing acquisition of the items shown in Section I. This normally will be a facility contract number. Otherwise, it should be a purchase order or procurement request number.

Block 12. Self-explanatory.

Block 13. Not applicable.

Block 14. Disregard the ''Military'' block. Show the NASA contract number and program for which the item is to be used.

Block 15. Enter the specific function to be performed by the equipment. When applicable, enter the tolerances, capacities,

specifications, etc., that the equipment must satisfy.

Block 16. Determine the date the item must be installed to meet production requirements. From this date deduct the estimated number of days required for installation. Enter the adjusted date in this block.

Block 17. Enter the date by which NASA must issue a Certificate of Nonavailability. Determine the date by subtracting the acquisition lead time and 30 days administrative lead time from the date shown in Block 16.

Block 18. Enter the Defense Priority and Allocations System (DPAS) rating assigned to the contract or anticipated purchase order, if applicable.

Block 19. Place an ''X'' in the appropriate box. If for replacement, identify the item being replaced and the reason for replacement.

Block 20. Place an ''X'' in the appropriate box. Show the appropriate symbol if the answer is ''yes.''

Block 21. Not applicable.

Blocks 22 and 23. In addition to the official's title and signature, type the signing official's name, office symbol or name, and telephone number plus extension. The company representative who prepares and submits the requirement to the cognizant NASA certifying office should sign.

Block 24. Self-explanatory.

Block 25a. Not applicable.

Block 25b. Enter the name and address of the installation certifying the requirement.

Block 25c. This block is for signature of the property administrator or contracting officer at plant level.

Block 25d. Self-explanatory.

Block 25e. This block is for the signature of NASA installation official certifying the requirement.

Block 25f. Self-explanatory.

Section III

Blocks 26–29. Self-explanatory.

Section IV

N/A

Section V

Complete this section if equipment is unavailable.

Section VI

Blocks 44–47. The requesting official signing Section II, Block 23, shall complete Section VI and shall list reasons for non-acceptance in Section VIII, Remarks, or on a separate document attached to the DD Form 1419.

Section VII

Block 48. Enter the complete name, street address, city, state, and zip code of the contractor or installation to which the item is to be shipped. Indicate railhead and truck delivery points when other than the address named.

Blocks 49 and 50. Self-explanatory.

Blocks 51 a. and b. Ensure that NASA appropriation symbols are included with the work order number.

Block 51c. Enter the NASA appropriation symbol chargeable for any special work ordered (e.g., rebuild, repair, or accessory replacement).

Block 51d. Enter the NASA installation and office symbol for the organization that will make payment for transportation and packing, crating, and handling.

Block 52. Self-explanatory.

Section VIII

Block 53. This block can be used to expand or explain entries made in Blocks 1 through 52. When requisitioning equipment from excess listings, identify the issuing office, list number, date, control number, and item number assigned to the equipment. When requesting equipment from DOD inventories, refer to DOD instructions.

Subpart 1845.72—Contract Property Management

1845.7201 Definitions.

Supporting responsibility, as used in this subpart, relates to the assignment of a subcontract, or a portion of a prime contract being performed at a secondary location of the prime contractor, to a property administrator other than the individual assigned to the prime location.

Property control system, as used in this subpart, identifies a contractor's internal management program encompassing the protection of, preservation of, accounting for, and control of property from its acquisition through disposition.

1845.7202 General.

This subpart describes major elements of the NASA Contract Property Management Program. It provides guidance to NASA installation personnel responsible for NASA contract property (NASA personal property in the possession of contractors). It applies to all NASA installation personnel charged with this responsibility, including industrial property officers and specialists, property administrators, and plant clearance officers. It also provides detailed procedures for property administration. The NASA Contract Property Management Program includes the following three major elements:

(a) Performance of property administration and plant clearance by DOD under delegations from NASA, pursuant to 1842.101.

(b) Performance of property administration and plant clearance by NASA under certain situations, pursuant to 1842.203.

(c) Maintenance of property administration and plant clearance functional oversight, regardless of delegations.

1845.7203 Delegations of property administration and plant clearance.

When delegated to DOD, property administration and plant clearance are performed in accordance with DOD's regulations and procedures, as amended by the NASA Letter of Contract Administration Delegation, Special Instructions on Property Administration and Plant Clearance. These Special Instructions are developed by the Headquarters Office of Management Systems and Facilities Logistics Management Office (Code JLG), and are available from that office upon request. The contracting officer shall issue the Special Instructions with delegations whenever Government property will be involved. Additional or more tailored property instructions are not proscribed but must be coordinated with Code JLG before issuance.

1845.7204 Retention of property administration and plant clearance.

NASA may occasionally retain the property administration and plant clearance function, such as for contract work performed at the installation awarding the contract and not subject to the clause at 1852.245–71, Installation-Accountable Government Property. In these cases, property administration shall be performed in accordance with 1845.3 through 1845.6, and plant clearance shall be performed in accordance with FAR Subpart 45.6 and 1845.6. Under the clause at 1852.245–71, property administration and plant clearance are neither delegated nor retained; they are simply not required because the property is treated as installation rather than contract property.

1845.7205 Functional oversight of property administration and plant clearance.

NASA contracting officers retain functional management responsibility for their contracts. Utilization of the contract administration services of another Government agency in no way relieves NASA contracting officers of their ultimate responsibility for the proper and effective management of contracts. The functional management responsibility for contract property is described in this section. Beyond individual contracting officers, each NASA installation has designated an industrial property officer to manage and coordinate property matters among the various contracting officers, technical officials, contractor officials, and delegated property administrators and plant clearance officers. Generally, that individual is responsible for the entire contract property management function outlined below; the installation is responsible for the entire function regardless of how it is organized and distributed. The responsibilities are:

(a) Provide a focal point for all management of contract property, including Government property (Government-furnished and contractor-acquired) provided to universities as well as to industry.

(b) Provide guidance to contracting and other personnel on the NASA property provisions.

(c) To the extent feasible, review property provisions of acquisition plans, solicitations, contracts, and modifications for potential problems. Propose changes as necessary.

(d) To the extent feasible, participate in pre-award surveys/post-award orientations when significant amounts of Government property will be involved.

(e) Ensure that vesting-of-title determinations are made and documented pursuant to FAR 35.014(b).

(f) Maintain effective communications with delegated property administrators and plant clearance officers to keep fully informed about contractor performance and progress on any property control problems.

(1) Obtain and review property control system survey summaries for all contracts for which property administration has been delegated. Advise Code JLG of any severe or continuing problems.

(2) Provide property administrators copies of all pertinent contract property documentation.

(g) Review and analyze NASA Form 1018, NASA Property in the Custody of Contractors.

(h) Negotiate, or ensure the negotiation of, facilities contracts when required by FAR 45.302 and 1845.302. Advise Code JLG annually of new and completed facilities contracts.

(i) Review property administrators' approvals of relief of responsibility for lost, damaged, and destroyed property and question any excessive or repetitive approvals.

(j) When appropriate, make recommendations to source and performance evaluation boards regarding property management and award fee criteria and evaluations regarding property management.

(k) Monitor plant clearance status to preclude delays in contract closeout.

(l) Maintain contract property files for all transactions and correspondence associated with each contract. Upon receipt of Standard Form 1424, Inventory Disposal Report, and DD Form 1593, Contract Administration Completion Record, or equivalents, merge all property records for the contract and forward for inclusion with the official completed file.

(m) Perform on-site property administration and plant clearance when they are not delegated to DOD and the property is not subject to the clause at 1852.245–71.

1845.7206 Responsibilities of property administrators and plant clearance officers.

1845.7206–1 Property administrators.

(a) When property administration is not delegated to DOD, the property administrator shall evaluate the contractor's management and control of Government property and ascertain whether the contractor is effectively complying with the contract provisions. The property administrator's responsibilities include—

(1) Developing and applying a system survey program for each contractor under the property administrator's cognizance;

(2) Evaluating the contractor's property control system and approving or recommending disapproval;

(3) Advising the contracting officer of any (i) contractor noncompliance with approved procedures and (ii) other significant problems the property administrator cannot resolve, and recommending appropriate action, which may include disapproval of the contractor's property control system;

(4) Resolving property administration matters as necessary with the contractor's management, personnel from Government procurement and logistics activities, and representatives of the NASA Headquarters Office of the Inspector General, the Defense Contract Audit Agency (DCAA), and other Government agencies; and

(5) Recognizing the functions of other Government personnel having cognizance of Government property and obtaining their assistance when required. (These functions include, but are not limited to, contract audit, quality assurance, engineering, pricing, and other technical areas. Assistance and advice on matters involving analyses of the contractor's books and accounting records and on any other audit matters deemed appropriate shall be obtained from the cognizant auditor.)

(b) The participation of property administrators (or other Government industrial property personnel) in pre-award surveys/post-award orientations is required whenever significant amounts of Government property will be involved, in order to reveal and resolve property management problems early in the acquisition cycle.

1845.7206–2 Plant clearance officers.

When plant clearance is not delegated to DOD, NASA plant clearance officers shall be responsible for—

(a) Providing the contractor with instructions and advice regarding the proper preparation of inventory schedules;

(b) Accepting or rejecting inventory schedules;

(c) Conducting or arranging for inventory verification;

(d) Initiating prescribed screening and effecting resulting actions;

(e) Final plant clearance of contractor inventory;

(f) Pre-inventory scrap determinations, as appropriate;

(g) Evaluating the adequacy of the contractor's procedures for property disposal;

(h) Determining the method of disposal;

(i) Surveillance of any contractor-conducted sales;

(j) Accounting for all contractor inventory reported by the contractor;

(k) Advising and assisting, as appropriate, the contractor, the Supply and Equipment Management Officer (SEMO) and other Federal agencies in all actions relating to the proper and timely disposal of contractor inventory;

(l) Approving the method of sale, evaluating bids, and approving sale prices for any contractor-conducted sales;

(m) Recommending the reasonableness of selling expenses related to any contractor-conducted sales;

(n) Securing antitrust clearance, as required; and

(o) Advising the contracting officer on all property disposal matters.

1845.7207 Declaration of excess property.

A problem often disclosed by system analysis is the failure of a contractor to report Government property not needed in performance of the contract (excess). The property administrator shall fully document and report any such finding to the administrative contracting officer. After a report of excess received from a contractor has been referred to the plant clearance officer for screening and ultimate disposition, the property administrator shall ensure prompt disposition. For centrally reportable plant equipment, the property administrator shall—

(a) Assure the preparation and submission of individual reports required of the contractor;

(b) Verify the permit certifications required by the forms; and

(c) Transmit the report to the NASA Industrial Property Officer.

1845.7208 Closure of contracts.

1845.7208–1 Completion or termination.

Upon completion or termination of a contract, the property administrator shall—

(a) Monitor the actions of the contractor in returning excess Government property not referred to the plant clearance officer; and

(b) Advise the cognizant plant clearance officer as to the existence at a contractor's plant of residual property requiring disposal.

1845.7208–2 Final review and closing of contracts.

(a) When informed that disposition of Government property under a contract has been completed, the property administrator shall perform a final review and sign a determination that—

(1) Disposition of Government property has been properly accomplished and documented;

(2) Adjustment documents, including any request of the contractor for relief from responsibility, have been processed to completion;

(3) Proceeds from disposals or other property transactions, including adjustments, have been properly credited to the contract or paid to the Government as directed by the contracting officer;

(4) All questions regarding title to property fabricated or acquired under the contract have been resolved and appropriately documented; and

(5) The contract property control record file is complete and ready for retirement.

(b) When final review pursuant to paragraph (a) of this section reveals that such action is proper, the property administrator shall accomplish and sign a DD Form 1593, Contract Administration Completion Record, or equivalent.

(c) The executed DD Form 1593 shall be forwarded to the contracting officer, the Property Summary Data Record shall be so annotated, and the contracting officer shall include it in the contract file.

1845.7209 Special subjects.

1845.7209–1 Government property at alternate locations of the prime contractor and subcontractor plants.

(a) Government property provided to a prime contractor may be located at other plants of the prime contractor or at subcontractor locations. The prime contractor is accountable and responsible to the Government for this property.

(b) A Government property administrator cognizant of the location of the property shall normally be designated to (1) perform required surveys of the property control system and (2) exercise surveillance over the property as a supporting responsibility.

(c) If the property administrator determines that supporting property administration is required, he or she shall write the cognizant contract administration office asking that a property administrator be assigned. The request for supporting property administration shall include—

(1) The name and address of the prime contractor;

(2) The prime contract number;

(3) The name and address of the alternate location of the prime contractor, or of the subcontractor where the property will be located;

(4) A listing of the property being furnished, or, if property is being acquired locally, a statement to this effect; and

(5) A copy of the subcontract or other document under which the property will be furnished or acquired.

(d) Concurrent with the action cited in paragraph (c) of this section, the property administrator shall ascertain whether the prime contractor will perform the necessary reviews and surveillance with the contractor's own personnel, or elect to rely upon the system approval and continuing surveillance by a supporting property administrator of the property control system at the alternate location or subcontractor plant. If the prime contractor advises that it will accept the findings of a supporting property administrator, a statement in writing to that effect shall be obtained. If the prime contractor does not so elect, it will be required to perform the requisite reviews and surveillance and document its actions and findings.

(e) If a single item or limited quantities of property will be located at an alternate location or subcontractor plant, the property administrator may determine that supporting property administration is unnecessary, provided—

(1) The prime contractor's records adequately reflect the location and use of the property;

(2) The nature of the property is such that the possibility of its use for unauthorized purposes is unlikely; and

(3) The nature of the property is such that a program of preventive maintenance is not required.

(f) When supporting property administration will not be requested, the services of a property administrator in the contract administration office cognizant of the site where the property is located may be requested on an occasional basis of special reviews or such other support as may be necessary. Repeated requests for assistance indicate a requirement for requesting supporting property administration.

1845.7209–2 Loss, damage, or destruction of Government property.

(a) Normally, contract provisions provide for assumption of risk of loss, damage, or destruction of Government property as described by the following:

(1) Sealed-bid and certain negotiated fixed-price contracts provide that the contractor assumes the risk for all Government property provided under the contract (see the clause at FAR 52.245–2, Government Property (Fixed-Price Contracts)).

(2) Other negotiated fixed-price contracts provide that the contractor assumes the risk for all Government property provided under the contract, with the exceptions set forth in the clause at FAR 52.245–2, Alternate I and Alternate II.

(3) Cost-reimbursement contracts (see the clause at FAR 52.245–5, Government Property (Cost-Reimbursement, Time-and-Material, or Labor-Hour Contracts)) provide that the Government assumes the risk for all Government property provided under the contract when there is no willful misconduct or lack of good faith of any of the contractor's managerial personnel as defined in the contract.

(4) There are certain events for which the Government does not assume the risk of loss, damage, or destruction of Government property, such as risks the contract expressly requires the contractor to insure against. Therefore, before reaching a conclusion or making a determination, the contracting officer shall obtain property administrator review of the contract clause and shall obtain advice from appropriate legal counsel on questions of legal meaning or intent.

(5) ''Willful misconduct'' may involve any intentional or deliberate act or failure to act causing, or resulting in, loss, damage, or destruction of Government property.

(6) ''Lack of good faith'' may involve gross neglect or disregard of the terms of the contract or of appropriate directions of the contracting officer or the contracting officer's authorized representatives. Examples of lack of good faith may be demonstrated by the failure of the contractor's managerial personnel to establish and maintain proper training and supervision of employees and proper application of controls in compliance with instructions issued by authorized Government personnel.

(b) If part of the contractor's system is found to be unsatisfactory, the property administrator shall increase surveillance of that part to prevent, to the extent possible, any loss, damage, or destruction of Government property. The property administrator shall give special attention to reasonably ensuring that any loss, damage, or destruction occurring during a period when a contractor's system is not approved is identified before approval or reinstatement of approval.

1845.7209–3 Loss, damage, or destruction of Government property while in contractor's possession or control.

(a) The property administrator shall require the contractor to report any loss, damage, or destruction of Government property in its possession or control (including property in the possession or control of subcontractors) as soon as it becomes known.

(b) When physical inventories, consumption analyses, or other actions disclose consumption of Government property considered unreasonable by the property administrator or loss, damage, or destruction of Government property not reported by the contractor, the property administrator shall prepare a statement of the items and amount involved. This statement shall be furnished to the contractor for investigation and submission of a written report to the property administrator relative to the incidents reported.

(c) The contractor's reports referenced in paragraphs (a) and (b) of this section shall contain factual data as to the circumstances surrounding the loss, damage, destruction, or excessive consumption, including—

(1) The contractor's name and the contract number;

(2) A description of items lost, damaged, destroyed, or unreasonably consumed;

(3) The cost of property lost, damaged, destroyed, or unreasonably consumed and cost of repairs in instances of damage (in event actual cost is not known, use a reasonable estimate);

(4) The date, time (if pertinent), and cause or origin of the loss, damage, destruction, or consumption;

(5) Known interests in any commingled property of which the Government property lost, damaged, destroyed, or unreasonably consumed is (or was) a part;

(6) Insurance, if any, covering the Government property or any part or interest in any commingled property;

(7) Actions taken by the contractor to prevent further loss, damage, destruction, or unreasonable consumption and to prevent repetition of similar incidents; and

(8) Other facts or circumstances relevant to determining liability and responsibility for repair or replacement.

(d) The property administrator shall investigate the incident to the degree required to reach a valid and supportable conclusion as to the contractor's liability for the loss, damage, destruction, or unreasonable consumption under the terms of the contract, and the course of action required to conclude the adjustment action. When required, the assistance of the quality assurance representative, industrial specialist, insurance officer, legal counsel, or other technician will be secured. When the contractor acknowledges liability, the property administrator shall forward a copy of the credit memorandum or other adjusting document to the administrative contracting officer and auditor, if appropriate, to assure proper credit. If analysis of contract provisions and circumstances establishes that the loss, damage, destruction, or consumption constitutes a risk assumed by the Government, the property administrator shall so advise the contractor in writing, thereby relieving the contractor of responsibility for the property. A copy of the documentation and notification to the contractor shall be retained in the Contract Property Control Data File for the contract.

(e)(1) If the property administrator concludes that the contractor is liable for the loss, damage, destruction, or unreasonable consumption of Government property, he or she shall forward the complete file with conclusions and recommendations to the contracting officer for review and determination. The file shall contain—

(i) A statement of facts as supported by investigation;

(ii) Recommendations as to the contractor's liability and its amount;

(iii) Recommendations as to action to be taken with regard to third party liability, if appropriate;

(iv) Requirements for disposition, repair, or replacement of damaged property; and

(v) Other pertinent comments.

(2) A copy of the contracting officer's determination shall be furnished to the contractor and the property administrator, and a copy shall be retained in the contracting officer's files. The property administrator's copy shall be filed in the Contract Property Control Data File for the contract when all pertinent actions, such as compensation to the Government or repair or replacement of the property, have been completed.

1845.7209–4 Financial reports.

The property administrator is responsible for obtaining financial reports as prescribed in 1845.505–14 for all assigned contracts. Reports shall be accumulated, reviewed and distributed as required. Contractors are required to submit separate reports on each contract that contains the property reporting clause (see 1852.245–73) except as noted in 1845.7101–4(c).

1845.7210 Contractor utilization of Government property.

1845.7210–1 Utilization surveys.

(a) The property administrator is responsible for ensuring that the contractor has effective procedures for evaluating Government property utilization. However, when necessary, the contract administration office shall provide specialists qualified to perform the technical portion of utilization surveys to assist the property administrator in determining the adequacy of these procedures.

(b) Upon assignment of an initial contract under which Government-owned plant equipment in particular will be provided to a contractor, the property administrator shall ensure that the contractor has established effective procedures and techniques for controlling its utilization. The property administrator, with the assistance of technical specialists, if necessary, shall evaluate these procedures. A record of the evaluation shall be prepared and become a part of the property administration file. If the procedures are determined inadequate, the record shall identify the deficiencies and the corrective actions necessary. If the deficiencies are not corrected by the contractor, the property administrator shall promptly refer the matter to the contracting officer.

(c) The property administrator shall perform annual surveys of the contractor's procedures related to utilization of Government-owned plant equipment. At contractor facilities having a substantial quantity of plant equipment, the surveys should normally be conducted on a continual basis, reviewing equipment utilization records and physically observing a group of preselected items during each portion of the survey. Surveys shall be conducted to the degree determined necessary, considering the findings of prior surveys and the contractor's performance history in identifying and declaring equipment excess to authorized requirements. The contractor shall be required to justify, by specific Government programs, the retention of all Government-owned plant equipment. The property

administrator shall make maximum use of contractor's machine loading data, order boards, production planning records, machine time records, and other production control methods.

(d) The property administrator shall conduct a special survey when a significant change occurs in the contractor's production schedules, such as a termination, completion of a contract, or a major adjustment in a program. Special surveys may be limited to a given department, activity, or division of a contractor's operation.

(e) In the absence of adequate justification for retention, the contractor shall identify and report Government-owned plant equipment in accordance with FAR 45.502(g) and 45.509–2(b)(4). Items that are part of approved inactive package plants or standby lines are exempted from utilization surveys. The contracting officer shall ascertain periodically whether existing authorizations for standby or lay-away requirements are current.

1845.7210–2 Records of surveys.

The property administrator shall prepare a record incorporating written findings, conclusions, and recommendations at the conclusion of each survey. If appropriate, the property administrator's record may be limited to a statement expressing concurrence with the reports of other specialists. The property administrator shall retain one copy of each record in the property administration file.

PART 1852—SOLICITATION PROVISIONS AND CONTRACT CLAUSES

1852.204–76 [Amended]

48–49. In the introductory text to section 1852.204–76, the citation ''1804.470–3'' is revised to read ''1804.470–4''.

1852.216–76 [Amended]

50. In the introductory text to section 1852.216–76, the citation ''1816.405–70(a)'' is revised to read ''1816.406–70(a)''.

51. In the asterisked brackets within the clause to section 1852.216–76, the citation ''1816.404–272(a)'' is revised to read ''1816.405–272(a)''.

52. In the introductory text of ALTERNATE I to the clause to section 1852.216–76, the citation ''1816.405–70(a)'' is revised to read ''1816.406–70(a)''.

1852.216–77 [Amended]

53. In the introductory text to section 1852.216–77, the citation ''1816.405–70(b)'' is revised to read ''1816.406–70(b)''.

54. In the asterisked brackets within the clause to section 1852.216–77, the citation ''1816.404–272(a)'' is revised to read ''1816.405–272(a)''.

1852.216–83 [Amended]

55. In the introductory text to section 1852.216–83, the citation ''1816.405–70(c)'' is revised to read ''1816.406–70(c)''.

1852.216–84 [Amended]

56. In the introductory text to section 1852.216–84, the citation ''1816.405–70(d)'' is revised to read ''1816.406–70(d)''.

1852.216–85 [Amended]

57. In the introductory text to section 1852.216–85, the citation ''1816.405–70(e)'' is revised to read ''1816.406–70(e)''.

1852.216–88 [Amended]

58. In the introductory text to section 1852.216–88, the citation ''1816.405–70(f)'' is revised to read ''1816.406–70(f)''.

59. Section 1852.216–89 is revised to read as follows:

1855.216–89 Assignment and Release Forms.

As prescribed in 1816.307–70(f), insert the following clause:

Assignment and Release Forms

(Date of Publication)

The Contractor shall use the following forms to fulfill the assignment and release requirements of FAR clause 52.216–7, Allowable Cost and Payment, and FAR clause 52.216–13, Allowable Cost and Payment (Facilities):

NASA Form 778, Contractor's Release;

NASA Form 779, Assignee's Release;

NASA Form 780, Contractor's Assignment of Refunds, Rebates, Credits, and Other Amounts; and

NASA Form 781, Assignee's Assignment of Refunds, Rebates, Credits, and Other Amounts.

Computer generated forms are acceptable, provided that they comply with FAR clause 52.253–1, Computer Generated Forms.

(End of clause)

60. Sections 1852.219–73, 1852.219–75, 1852.219–76, and 1852.219–77 are revised to read as follows:

1852.219–73 Small, Small Disadvantaged, and Women-Owned Small Business Subcontracting Plan.

As prescribed in 1819.708–70(a), insert the following provision:

Small, Small Disadvantaged and Women-Owned Small Business Subcontracting Plan

(Date of Publication)

(a) This provision is not applicable to small business concerns.

(b) The contract expected to result from this solicitation will contain FAR clause 52.219–9, ''Small, Small Disadvantaged, and Women-Owned Small Business Subcontracting Plan.'' The apparent low bidder must submit the complete plan within [Insert number of days] calendar days after request by the Contracting Officer.

(End of provision)

* * * * *

1852.219–75 Small, Small Disadvantaged, and Women-Owned Small Business Subcontracting Reporting.

As prescribed in 1819.708–70(b), insert the following clause:

Small, Small Disadvantaged, and Women-Owned Small Business Subcontracting Reporting

(Date of Publication)

(a) The Contractor shall submit the Summary Subcontract Report (Standard Form (SF) 295) semiannually for the reporting periods specified in block 4 of the form. All other instructions for SF 295 remain in effect.

(b) The Contractor shall include this clause in all subcontracts that include the clause at FAR 52.219–9.

(End of clause)

1852.219–76 NASA 8 Percent Goal.

As prescribed in 1819.7003 insert the following clause:

NASA 8 Percent Goal

(Date of Publication)

(a) Definitions.

Historically Black Colleges or University, as used in this clause means an institution determined by the Secretary of Education to meet the requirements of 34 CFR Section 608.2. The term also includes any nonprofit research institution that was an integral part of such a college or university before November 14, 1986.

Minority institutions, as used in this clause, means an institution of higher education meeting the requirements of section 1046(3) of the Higher Education Act of 1965 (20 U.S.C. 1135d–5(3)) which for the purposes of this clause includes a Hispanic-serving institution of higher education as defined in section 316(b)(1) of the Act (20 U.S.C. 1059c(b)(1)).

Small disadvantaged business concern, as used in this clause, means a small business concern that (1) is at least 51 percent unconditionally owned by one or more individuals who are both socially and economically disadvantaged, or a publicly owned business having at least 51 percent of its stock unconditionally owned by one or more socially and economically disadvantaged individuals, and (2) has its management and daily business controlled by one or more such individuals. This term also means a small business concern that is at least 51 percent unconditionally owned by an economically disadvantaged Indian tribe or Native Hawaiian Organization, or a publicly owned business having at least 51 percent of its stock unconditionally owned by one or more of these entities, which has

its management and daily business controlled by members of an economically disadvantaged Indian tribe or Native Hawaiian Organization, and which meets the requirements of 13 CFR 124.

Women-owned small business concern, as used in this clause, means a small business concern (1) which is at least 51 percent owned by one or more women or, in the case of any publicly owned business, at least 51 percent of the stock of which is owned by one or more women, and (2) whose management and daily business operations are controlled by one or more women.

(b) The NASA Administrator is required by statute to establish annually a goal to make available to small disadvantaged business concerns, Historically Black Colleges and Universities, minority institutions, and women-owned small business concerns, at least 8 percent of NASA's procurement dollars under prime contracts or subcontracts awarded in support of authorized programs, including the space station by the time operational status is obtained.

(c) The contractor hereby agrees to assist NASA in achieving this goal by using its best efforts to award subcontracts to such entities to the fullest extent consistent with efficient contract performance.

(d) Contractors acting in good faith may rely on written representations by their subcontractors regarding their status as small disadvantaged business concerns, Historically Black Colleges and Universities, minority institutions, and women-owned small business concerns.

(End of clause)

1852.219–77 NASA Mentor-Protégé Program.

As prescribed in 1819.7219(a), insert the following clause:

NASA Mentor-Protégé Program

(Date of Publication)

(a) Prime contractors, including certain small businesses, are encouraged to participate in the NASA pilot Mentor-Protégé Program for the purpose of providing developmental assistance to eligible protégé entities to enhance their capabilities and increase their participation in NASA contracts.

(b) The pilot Program consists of:

(1) Mentor firms, which are large prime contractors with at least one active subcontracting plan or eligible small businesses;

(2) Protégés, which are subcontractors to the prime contractor, include small disadvantaged business concerns, women-owned small business concerns, Historically Black Colleges and Universities, and minority institutions meeting the qualifications specified in NASA FAR Supplement (NFS) 1819.7209.

(3) Mentor-protégé agreements, approved by the NASA Office of Small and Disadvantaged Business Utilization (OSDBU);

(4) Potential for payment of additional award fee for voluntary participation and successful performance in the Mentor-Protégé Program.

(c) Mentor participation in the Program, described in NFS 1819.72, means providing technical, managerial and financial assistance to aid protégés in developing requisite high-tech expertise and business systems to compete for and successfully perform NASA contracts and subcontracts.

(d) Contractors interested in participating in the pilot program are encouraged to contact the NASA OSDBU, Washington, DC 20546, (202) 358–2088, for further information.

(End of clause)

1852.219–78 [Removed]

61. Section 1852.219–78 is removed.

62. Section 1852.219–79 is revised to read as follows:

1852.219–79 Mentor Requirements and Evaluation.

As prescribed in 1819.7219(b), insert the following clause:

Mentor Requirements and Evaluation

(Date of Publication)

(a) The purpose of the NASA Mentor-Protégé Program is for a NASA prime contractor to provide developmental assistance to certain subcontractors qualifying as protégés. Eligible protégés include small disadvantaged business concerns, women-owned small business concerns, Historically Black Colleges and Universities, and minority institutions meeting the qualifications specified in NASA FAR Supplement (NFS) 1819.7209.

(b) NASA will evaluate the contractor's performance through the Performance Evaluation process. The evaluation will consider the following:

(1) Specific actions taken by the contractor, during the evaluation period, to increase the participation of protégés as subcontractors and suppliers;

(2) Specific actions taken by the contractor during this evaluation period to develop the technical and corporate administrative expertise of a protégé as defined in the agreement;

(3) To what extent the protégé has met the developmental objectives in the agreement; and

(4) To what extent the firm's participation in the Mentor-Protégé Program resulted in the protégé receiving competitive contract(s) and subcontract(s) from private firms and agencies other than the mentor.

(c) Semi-annual reports shall be submitted by the mentor to the NASA Mentor-Protégé program manager, NASA Headquarters OSDBU, to include information as outlined in paragraph (b).

(d) The mentor will notify the OSDBU and the contracting officer, in writing, as least 30 days in advance of the mentor firm's intent to voluntarily withdraw from the program or upon receipt of a protégé's notice to withdraw from the Program;

(e) Mentor and protégé firms will submit a ''lessons learned'' evaluation to the NASA OSDBU at the conclusion of the pilot Program period or the conclusion of their effort whichever comes first. At the conclusion of each year in the Mentor-Protégé Program, the mentor and protégé, as appropriate, will formally brief the NASA Mentor-Protégé program manager, the technical program manager, and the contracting officer during a formal program review regarding Program accomplishments as pertains to the approved agreement.

(f) NASA may terminate mentor-protégé agreements and exclude mentor or protégé firms from participating in the NASA program if NASA determines that such actions are in NASA's interest. These actions shall be approved by the NASA OSDBU. NASA shall terminate an agreement by delivering to the contractor a Notice specifying the reason for termination and the effective date. Termination of an agreement does not constitute a termination of the subcontract between the mentor and the protégé. A plan for accomplishing the subcontract effort should the agreement be terminated shall be submitted with the agreement as required in NFS 1819.7213(h).

(End of clause)

1852.222–70 [Removed]

63. Section 1852.222–70 is removed.

1852.225–71 [Amended]

64. In the introductory text to section 1852.225–71, the citation ''1825.205–70'' is revised to read ''1825.207–70''.

1852.227–11 [Amended]

65. In the introductory text to section 1852.227–11, the citation ''1827.373(a)'' is revised to read ''1827.303–70(a)''.

1852.227–14 [Amended]

66. In the introductory text to section 1852.227–14, the citation ''1827.409(e)'' is revised to read ''1827.409(a)''.

1852.227–17 [Amended]

67. In the introductory text to section 1852.227–17, the citation ''1827.405(c)'' is revised to read ''1827.409(i)''.

1852.227–19 [Amended]

68. In paragraph (a) to section 1852.227–19, the citation ''1827.409(f)'' is revised to read ''1827.409(k)(i)''.

69. In paragraph (b) to section 1852.227–19, the citation ''1827.409(g)'' is revised to read ''1827.409(k)(ii)''.

1852.227–70 [Amended]

70. In the introductory text to section 1852.227–70, the citation ''1827.373(b)'' is revised to read ''1827.303–70(b)''.

1852.227–71 [Amended]

71. In the introductory text to section 1852.227–71, the citation ''1827.373(d) is revised to read ''1827.303–70(c)''.

1852.227–72 [Amended]

72. In the introductory text to section 1852.227–72, the citation ''1827.373(e)'' is revised to read ''1827.303–70(d)''.

73. In section 1852.227–72, the date of the clause ''(APR 1984)'' is revised to read ''(Insert date of publication), and in

paragraph (b) of the clause, the citation ''1827.375–3'' is revised to read 1827.305–370''.

1852.227–84 [Amended]

74. In the introductory text to section 1852.227–84, the citation ''1827.373(f)'' is revised to read ''1827.303–70(e)''.

1852.227–85 [Amended]

75. In the introductory text to section ''1852.227–85, the citation ''1827.373(c)(1)'' is revised to read ''1827.303–70(f)''.

1852.227–86 [Amended]

76. In the introductory text to section 1852.227–86, the citation ''1827.409(h)'' is revised to read ''1827.409–70''.

1852.239–70 [Amended]

77. In the introductory text to section 1852.239–70, the citation ''1836.106(a)(1)'' is revised to read ''1839.106–70(a)(1)''.

1852.242–70 [Amended]

78. In the introductory text to section 1852.242–70, the citation ''1842.7001'' is revised to read ''1842.271''.

1852.242–72 [Amended]

79–80. In the introductory text to section 1852.242–72, the citation ''1842.7003(a)'' is revised to read ''1842.7001(a)''.

81. In the introductory text to ALTERNATE I within the clause to section 1852.242–72, the citation ''1842.7003(b)'' is revised to read ''1842.7001(b)''.

82. In the introductory text to ALTERNATE II within the clause to section 1852.242–72, the citation ''1842.7003(c)'' is revised to read ''1842.7001(c)''.

83. Section 1852.242–73 is revised to read as follows:

1852.242–73 NASA Contractor Financial Management Reporting.

As prescribed in 1842.7202, insert the following clause:

NASA Contractor Financial Management Reporting

(Date of Publication)

(a) The Contractor shall submit NASA Contractor Financial Management Reports on NASA Forms 533 in accordance with the instructions in NASA Policy Guidance (NPG) 9501.2, NASA Contractor Financial Management Reporting, and on the reverse side of the forms, as supplemented in the Schedule of this contract. The detailed reporting categories to be used, which shall correlate with technical and schedule reporting, shall be set forth in the Schedule. Contractor implementation of reporting requirements under this clause shall include NASA approval of the definitions of the content of each reporting category and give due regard to the Contractor's established financial management information system.

(b) Lower level detail used by the Contractor for its own management purposes to validate information provided to NASA shall be compatible with NASA requirements.

(c) Reports shall be submitted in the number of copies, at the time, and in the manner set forth in the Schedule or as designated in writing by the Contractor Officer. Upon completion and acceptance by NASA of all contract line items, the Contracting Officer may direct the Contractor to submit Form 533 reports on a quarterly basis only, report only when changes in actual cost incur, or suspend reporting altogether.

(d) The Contractor shall ensure that its Form 533 reports include accurate subcontractor cost data, in the proper reporting categories, for the reporting period.

(e) If during the performance of this contract NASA requires a change in the information or reporting requirements specified in the Schedule, or as provided for in paragraph (a) or (c) of this clause, the Contracting Officer shall effect that change in accordance with the Changes clause of this contract.

(End of clause)

1852.242–74 [Removed]

84. Section 1852.242–74 is removed.

85. Alternate I within the clause of section 1852.243–70 is revised to read as follows:

1852.243–70 Engineering change proposals.

* * * * *

Alternate I

(Date of Publication)

As prescribed in 1843.205–70(b), add the following paragraph (f), modified to suit contract type, to the basic clause:

(f) If the ____ [price or estimated cost] adjustment proposed for any contractor-originated ECP is ____ [insert a percent or dollar amount of the contract price or estimated cost] or less, the ECP shall be executed with no adjustment to the contract ____ [price or estimated cost].

86. Sections 1852.245–70, 1852.245–71, 1852.245–77, and 1852.245–79 are revised to read as follows:

1852.245–70 Contractor Requests for Government-Owned Equipment.

As prescribed in 1845.106–70(a), insert the following clause:

Contractor Requests for Government-Owned Equipment

(Date of Publication)

(a) ''Equipment,'' as used in this clause, means commercially available items capable of stand-alone use, including those to be acquired for incorporation into special test equipment or special tooling.

(b)(1) Upon determination of need for any Government-owned equipment item for performance of this contract, the contractor shall provide to the contracting officer a written request justifying the need for the equipment and the reasons why contractor-owned property cannot be used, citing the applicable FAR or contract authority for use of Government-owned equipment. Equipment being acquired as a deliverable end item listed in the contract or as a component for incorporation into a deliverable end item listed in the contract is exempt from this requirement.

(2) The contractor's request shall include a description of the item in sufficient detail to enable the Government to screen its inventories for available equipment or to purchase equipment. For this purpose, the contractor shall (i) prepare a separate DD Form 1419, DOD Industrial Plant Equipment Requisition, or equivalent format, for each item requested and (ii) forward it through the contracting officer to the Industrial Property Officer at the cognizant NASA installation at least 30 days in advance of the date the contractor intends to acquire the item. Multiple units of identical items may be requested on a single form. Instructions for preparing the DD Form 1419 are contained in NASA FAR Supplement 1845.7102. If a certificate of nonavailability is not received within that period, the contractor may proceed to acquire the item, subject to having obtained contracting officer consent, if required, and having complied with any other applicable provisions of this contract.

(c) Contractors who are authorized to conduct their own screening using the NASA Equipment Management System (NEMS) and other Government sources of excess property shall provide the evidence of screening results with their request for contracting officer consent. Requests to purchase based on unsuitability of items found shall include rationale for the determined unsuitability.

(End of clause)

1852.245–71 Installation-Accountable Government Property.

As prescribed in 1845.106–70(b), insert the following clause:

Installation-Accountable Government Property

(Date of Publication)

(a) The Government property described in the clause at 1852.245–77, List of Installation-Provided Property and Services, shall be made available to the contractor on a no-charge basis for use in performance of this contract. This property shall be utilized only within the physical confines of the NASA installation that provided the property. Under this clause, the Government retains accountability for, and title to, the property, and the contractor assumes the following user responsibilities: [Insert contractor user responsibilities].

The contractor shall establish and adhere to a system of written procedures for compliance with these user responsibilities. Such procedures must include holding employees liable, when appropriate, for loss, damage, or destruction of Government property.

(b)(1) The official accountable recordkeeping, physical inventory, financial

control, and reporting of the property subject to this clause shall be retained by the Government and accomplished by the installation Supply and Equipment Management Officer (SEMO) and Financial Management Officer. If this contract provides for the contractor to acquire property, title to which will vest in the Government, the following additional procedures apply:

(i) The contractor's purchase order shall require the vendor to deliver the property to the installation central receiving area;

(ii) The contractor shall furnish a copy of each purchase order, prior to delivery by the vendor, to the installation central receiving area;

(iii) The contractor shall establish a record of the property as required by FAR 45.5 and 1845.5 and furnish to the Industrial Property Officer a DD Form 1149 Requisition and Invoice/Shipping Document (or installation equivalent) to transfer accountability to the Government within 5 working days after receipt of the property by the contractor. The contractor is accountable for all contractor-acquired property until the property is transferred to the Government's accountability.

(iv) Contractor use of Government property at an off-site location and off-site subcontractor use require advance approval of the contracting officer and notification of the SEMO. The contractor shall assume accountability and financial reporting responsibility for such property. The contractor shall establish records and property control procedures and maintain the property in accordance with the requirements of FAR Part 45.5 until its return to the installation.

(2) After transfer of accountability to the Government, the contractor shall continue to maintain such internal records as are necessary to execute the user responsibilities identified in paragraph (a) and document the acquisition, billing, and disposition of the property. These records and supporting documentation shall be made available, upon request, to the SEMO and any other authorized representatives of the contracting officer.

(End of clause)

Alternate I

(March 1989)

As prescribed in 1845.106–70(b)(2), insert the following as subparagraph (b)(3) of the basic clause:

(3) The contractor shall not utilize the installation's central receiving facility for receipt of Contractor-acquired property. However, the Contractor shall provide listings suitable for establishing accountable records of all such property received, on a quarterly basis, to the Contracting Officer and the Supply and Equipment Management Officer.

* * * * *

1852.245–77 List of Installation-Accountable Property and Services.

As prescribed in 1845.106–70(h), insert the following clause:

List of Installation-Accountable Property and Services

(Date of Publication)

In accordance with the clause at 1852.245–71, Installation-Accountable Government Property, the Contractor is authorized use of the types of property and services listed below, to the extent they are available, in the performance of this contract within the physical borders of the installation which may include buildings and space owned or directly leased by NASA in close proximity to the installation, if so designated by the Contracting Officer.

(a) Office space, work area space, and utilities. Government telephones are available for official purposes only; pay telephones are available for contractor employees for unofficial calls.

(b) General- and special-purpose equipment, including office furniture.

(1) Equipment to be made available is listed in Attachment ____ [Insert attachment number or ''not applicable'' if no equipment is provided]. The Government retains accountability for this property under the clause at 1852.245–71, Installation-Accountable Government Property, regardless of its authorized location.

(2) If the Contractor acquires property, title to which vests in the Government pursuant to other provisions of this contract, this property also shall become accountable to the Government upon its entry into Government records as required by the clause at 1852.245–71, Installation-Accountable Government Property.

(3) The Contractor shall not bring to the installation for use under this contract any property owned or leased by the Contractor, or other property that the Contractor is accountable for under any other Government contract, without the Contracting Officer's prior written approval.

(c) Supplies from stores stock.

(d) Publications and blank forms stocked by the installation.

(e) Safety and fire protection for Contractor personnel and facilities.

(f) Installation service facilities: _____ [Insert the name of the facilities or ''None'']

(g) Medical treatment of a first-aid nature for Contractor personnel injuries or illnesses sustained during on-site duty.

(h) Cafeteria privileges for Contractor employees during normal operating hours.

(i) Building maintenance for facilities occupied by Contractor personnel.

(j) Moving and hauling for office moves, movement of large equipment, and delivery of supplies. Moving services shall be provided on-site, as approved by the Contracting Officer.

(k) The user responsibilities of the Contractor are defined in paragraph (a) of the clause at 1852.245–71, Installation-Accountable Government Property.

(End of clause)

1852.245–79 Use of Government-Owned Property.

As prescribed in 1845.106–70(j), insert the following provision:

Use of Government-Owned Property

(Date of Publication)

(a) The offeror ( ) does, ( ) does not intend to use in performance of any contract awarded as a result of this solicitation existing Government-owned facilities (real property or plant equipment), special test equipment, or special tooling (including any property offered by this solicitation). The offeror shall identify any offered property not intended to be used. If the offeror does intend to use any of the above items, the offeror must furnish the following information required by Federal Acquisition Regulation (FAR) 45.205(b), and NASA FAR Supplement (NFS) 1845.102–71:

(1) Identification and quantity of each item. Include the item's acquisition cost if it is not property offered by this solicitation.

(2) For property not offered by this solicitation, identification of the Government contract under which the property is accountable and written permission for its use from the cognizant Contracting Officer.

(3) Amount of rent, calculated in accordance with FAR 45.403 and the clause at FAR 52.245–9, Use and Charges, unless the property has been offered on a rent-free basis by this solicitation.

(4) The dates during which the property will be available for use, and if it is to be used in more than one contract, the amounts of respective uses in sufficient detail to support proration of the rent. This information is not required for property offered by this solicitation.

(b) The offeror ( ) does, ( ) does not request additional Government-provided property for use in performing any contract awarded as a result of this solicitation. If the offeror requests additional Government-provided property, the offeror must furnish—

(1) Identification of the property, quantity, and estimated acquisition cost of each item; and

(2) The offeror's written statement of its inability to obtain facilities as prescribed by FAR 45.302–1(a)(4).

(c) If the offeror intends to use any Government property (paragraph (a) or (b) of this provision), the offer must also furnish the following:

(1) The date of the last Government review of the offeror's property control and accounting system, actions taken to correct any deficiencies found, and the name and telephone number of the cognizant property administrator.

(2) A statement that the offeror has reviewed, understands, and can comply with all property management and accounting procedures in the solicitation, FAR Subpart 45.5, and NFS Subparts 1845.5 and 1845.71.

(3) A statement indicating whether or not the costs associated with paragraph (c)(2) of this provision, including plant clearance and/or plant reconversion costs, are included in its cost proposal.

(End of provision)

87. Part 1853 is revised to read as follows:

PART 1853—FORMS

Subpart 1853.1—General

Sec.
1853.100 Scope of subpart.
1853.101 Requirements for use of forms.
1853.103 Exceptions.
1853.105 Computer generation.
1853.107 Obtaining forms.
1853.108 Recommendations concerning forms.

Subpart 1853.2—Prescription of Forms

1853.200 Scope of subpart.
1853.204 Administrative matters.
1853.204–70 General (NASA Forms 507, 507A, 507B, 507G, 507M, 531, 533M, 533Q, 1098, 1356, 1611, 1612, and Department of Defense Form 1593).
1853.208 Required sources of supplies and services.
1853.208–70 Other Government sources (Standard Form 1080, Air Force Form 858, Department of Energy Form 5400.3, Nuclear Regulatory Commission Form 313).
1853.215 Contracting by negotiation.
1853.215–2 Price negotiation (NASA Form 634 and Department of Defense Form 1861).
1853.216 Types of contracts.
1853.216–70 Assignees under cost-reimbursement contracts (NASA Forms 778, 779, 780, and 781).
1853.217 Special contracting methods (NASA Form 523).
1853.232 Contract financing (Standard Forms 272, 272A).
1853.242 Contract administration.
1853.242–70 Delegation (NASA Forms 1430, 1430A, 1431, 1432, 1433, and 1634) and service request (NASA Form 1434).
1853.242–71 Notifications (NASA Form 456).
1853.245 Property (NASA Form 1018, Department of Defense Form 1419).
1853.246 Quality assurance (Department of Defense Forms 250 and 250c).
1853.249 Termination of contracts (NASA Forms 1412, 1413).

Subpart 1853.3—Illustrations of Forms

1853.300 Scope of subpart.
1853.301 Standard forms.
1853.303 Agency forms.

Authority: 42 U.S.C. 2473(c)(1).

Subpart 1853.1—General

1853.100 Scope of subpart.

This subpart contains information regarding the forms prescribed in this Regulation. Unless specified otherwise, the policies in FAR Part 53 apply to NASA-prescribed forms.

1853.101 Requirements for use of forms.

The requirements for use of the forms in this part are contained in Parts 1801 through 1852 where the subject matter applicable to each form is addressed. The specific location of each form's prescription is identified in subpart 1853.2.

1853.103 Exceptions.

(1) Requests for exceptions to standard or optional forms shall be forwarded through the center forms manager to the Headquarters Office of Procurement (Code HK).

(2) Alteration of any form in this part is prohibited unless prior approval has been obtained from the Headquarters Office of Management Systems and Facilities, Information Resources Management Division (Code JT). Requests for alteration shall be coordinated with the center forms manager before transmittal to Code JT.

(3) Use for the same purpose of any form other than one prescribed by this Regulation requires prior approval of Code HK.

1853.105 Computer generation.

Forms prescribed by this Regulation may be adapted for computer preparation providing there is no change to the name, content, or sequence of the data elements, and the form carries the form number and edition date.

1853.107 Obtaining forms. (NASA supplements paragraph (c))

(c)(i) NASA centers and offices may obtain forms prescribed in the FAR or in this Regulation from Goddard Space Flight Center, Code 239. Orders should be placed on a NASA Form 2, Request for Blank Forms, Publications and Issuances.

(ii) Contracting officers, at the time of contract award, shall ensure that contractors are notified of the procedures for obtaining NASA forms required for performance under the contract.

1853.108 Recommendations concerning forms.

Code HK is the office responsible for submitting form recommendations.

Subpart 1853.2—Prescription of Forms

1853.200 Scope of subpart.

This subpart summarizes the prescriptions of NASA forms and other forms adopted by NASA for use in acquisition.

1853.204 Administrative matters.

1853.204–70 General (NASA Forms 507, 507A, 507B, 507G, 507M, 531, 533M, 533Q, 1098, 1356, 1611, 1612 and Department of Defense Form 1593).

(a) The following forms are prescribed in 1804.670–3:

(1) NASA Form 507, Individual Procurement Action Report (New Awards).

(2) NASA Form 507A, Individual Procurement Action Report (New Awards) Supplement A.

(3) NASA Form 507B, Individual Procurement Action Report Supplement B.

(4) NASA Form 507G, Individual Procurement Action Report (Grants/Orders).

(5) NASA Form 507M, Individual Procurement Action Report (Modifications).

(b) *NASA Form 531, Name Check Request.* Prescribed in 1852.204–76.

(c) The following forms are prescribed in 1842.72:

(1) NASA Form 533M, Monthly Contractor Financial Management Report.

(2) NASA Form 533Q, Quarterly Contractor Financial Management Report.

(d) *NASA Form 1098, Checklist for Contract Award File Content.* Prescribed in 1804.803–70.

(e) *NASA Form 1356, C.A.S.E. Report on College and University Projects.* Prescribed in 1804.671.

(f) *NASA Form 1611, Contract Completion Statement.* Prescribed in 1804.804–2 and 1804.804–5.

(g) The following forms are prescribed in 1804.804–5:

(1) NASA Form 1612, Contract Closeout Checklist.

(2) DD Form 1593, Contract Administration Completion Record.

1853.208 Required sources of supplies and services.

1853.208–70 Other Government sources (Standard Form 1080, Air Force Form 858, Department of Energy Form 5400.3, Nuclear Regulatory Commission Form 313).

(a) *SF 1080, Voucher for Transfers Between Appropriations and/or Funds (Disbursement).* Prescribed in 1808.002–72(e).

(b) *Air Force Form 858, Forecast of Requirements (Missile Propellants and Pressurants).* Prescribed in 1808.002–72(f).

(c) *Department of Energy Form 5400.3, Isotope Order Blank.* Prescribed in 1808.002–70(a).

(d) *Nuclear Regulatory Commission Form 313, Application for Material License.* Prescribed in 1808.002–70(a).

1853.215 Contracting by negotiation.

1853.215–2 Price negotiation (NASA Form 634 and Department of Defense Form 1861).

(a) *NASA Form 634, Structured Approach—Profit/Fee Objective.* Prescribed in 1815.970–1(a).

(b) *DD Form 1861, Contract Facilities Capital Cost of Money.* Prescribed in 1830.70, and instructions for completion are in 1830.7001–2.

1853.216 Types of contracts.

1853.216–70 Assignees under cost-reimbursement contracts (NASA Forms 778, 779, 780, and 781).

The following forms are prescribed in 1852.216–89:

(a) NASA Form 778, Contractor's Release.

(b) NASA Form 779, Assignee's Release.

(c) NASA Form 780, Contractor's Assignment of Refunds, Rebates, Credits, and Other Amounts.

(d) NASA Form 781, Assignee's Assignment of Refunds, Rebates, Credits, and Other Amounts.

1853.217 Special contracting methods (NASA Forms 523).

NASA Form 523, NASA-Defense Purchase Request. Prescribed in 1808.002–72(b) and 1817.7002.

1853.232 Contract financing (Standard Forms 272, 272A).

The following forms are prescribed in 1832.412(a)(ii):

(a) SF 272, Federal Cash Transactions Report.

(b) SF 272A, Federal Cash Transactions Report Continuation.

1853.242 Contract administration.

1853.242–70 Delegation (NASA Forms 1430, 1430A, 1431, 1432, 1433, and 1634) and service request (NASA Form 1434).

(a) *NASA Form 1430, Letter of Contract Administration Delegation, General.* Prescribed in 1842.202(d)(ii).

(b) *NASA Form 1430A, Letter of Contract Administration Delegation, Special Instructions.* Prescribed in 1842.202(d)(ii).

(c) *NASA Form 1431, Letter of Acceptance of Contract Administration Delegation.* Prescribed in 1842.202(d)(iii).

(d) *NASA Form 1432, Letter of Contract Administration Delegation, Termination.* Prescribed in 1842.202(b)(1)(G).

(e) *NASA Form 1433, Letter of Audit Delegation.* Prescribed in 1842.202(d)(iv).

(f) *NASA Form 1634, Contracting Officer Technical Representative (COTR) Delegation.* Prescribed in 1842.270(b).

(g) *NASA Form 1434, Letter of Request for Pricing-Audit Technical Evaluation Services.* Prescribed in 1815.805–5(a)(1)(E).

1853.242–71 Notifications (NASA Form 456).

NASA Form 456, Notice of Contract Costs Suspended and/or Disapproved. Prescribed in 1842.803(b)(2).

1853.245 Property (NASA Form 1018, Department of Defense Form 1419).

(a) *NASA Form 1018, NASA Property in the Custody of Contractors.* Prescribed in 1845.505–14. Instructions for form completion are in 1845.7101.

(b) DD Form 1419, DOD Industrial Plant Equipment Requisition. Prescribed in 1852.245–70. Instructions for form completion are in 1845.7102.

1853.246 Quality assurance (Department of Defense Forms 250 and 250c).

The following forms are prescribed in 1846.670. Instructions for form completion are in 1846.670:

(a) DD Form 250, Material Inspection and Receiving Report

(b) DD Form 250c, Material Inspection and Receiving Report-Continuation Sheet.

1853.249 Termination of contracts (NASA Forms 1412, 1413).

(a) *NASA Form 1412, Termination Authority.* Prescribed in 1849.101–71.

(b) *NASA Form 1413, Termination Docket Checklist.* Prescribed in 1849.105–70.

Subpart 1853.3—Illustrations of Forms

1853.300 Scope of subpart.

This subpart contains illustrations of NASA forms and others forms used by NASA in acquisitions and not prescribed in the FAR.

1853.301 Standard forms.

This section illustrates standard forms (SFs) specified for use in acquisitions.

1853.303 Agency forms.

This section illustrates NASA and other agency forms specified for use in acquisitions. The other agency forms are arranged numerically by agency following the NASA forms.

PART 1870—NASA SUPPLEMENTARY REGULATIONS

Part 1870 [Removed]

88. Part 1870, NASA Supplementary Regulations, is removed.

[FR Doc. 97–17310 Filed 7–8–97; 8:45 am]

BILLING CODE 7510–01–M

DEPARTMENT OF COMMERCE

National Oceanic and Atmospheric Administration

50 CFR Part 648

[Docket No. 960805216–7111–06; I.D. 063097C]

Fisheries of the Northeastern United States; Scup Fishery; Commercial Quota Harvested for Massachusetts

AGENCY: National Marine Fisheries Service (NMFS), National Oceanic and Atmospheric Administration (NOAA), Commerce.

ACTION: Commercial quota harvest.

SUMMARY: NMFS announces that the scup commercial quota for the 1997 Summer period (May 1, 1997 - October 31, 1997) available to the Commonwealth of Massachusetts has been harvested. Vessels issued a commercial Federal fisheries permit for the scup fishery may not land scup in Massachusetts for the remainder of the 1997 Summer period, unless additional quota becomes available through a transfer. Regulations governing the scup fishery require publication of this notification to advise the Commonwealth of Massachusetts that the quota allocated for the 1997 Summer period has been harvested and to advise vessel and dealer permit holders that no commercial quota is available for landing scup in Massachusetts for the remainder of the 1997 Summer period.

DATES: Effective 0001 hrs, local time (l.t.) July 2, 1997, through 2400 hrs, l.t., October 31, 1997.

FOR FURTHER INFORMATION CONTACT: Lucy Helvenston, 508–281–9347.

SUPPLEMENTARY INFORMATION: Regulations governing the scup fishery are found at 50 CFR part 648. Section 648.120(d) requires annual specification of a commercial quota that is allocated into two Winter periods: January-April (Winter I) and November-December (Winter II); and one Summer period: May-October (Summer)(62 FR 27978, May 22, 1997). The Winter periods are allocated coastwide among the states from Maine to North Carolina and the Summer period is allocated on a state-by-state basis from Maine to North Carolina. The process to set the annual commercial quota and the percent allocated to each state for the Summer period are described in § 648.120.

The total commercial quota for scup for the 1997 Summer period is 2,337,000 lb (1,060,045 kg) (62 FR 27978, May 22, 1997). The percent of the Summer period quota allocated to vessels landing scup in Massachusetts is

15.49120 percent, or 362,029 lb (164,214 kg). Section 648.120(d)(6) provides that any overages of the commercial quota for a Summer period landed in any state will be deducted from that state's quota for the following Summer period. Section 648.121(b) requires the Administrator, Northeast Region, NMFS (Regional Administrator), to monitor states' commercial quotas and to determine when a state's commercial quota is harvested. The Regional Administrator is further required to publish notification in the **Federal Register** advising a state and notifying Federal vessel and dealer permit holders that, effective upon a specific date, the state's commercial quota has been harvested and no commercial quota is available for landing scup in that state for the remainder of the Summer period. The Regional Administrator has determined, based on dealer reports and other available information, that the Commonwealth of Massachusetts's commercial quota for the 1997 Summer period has been harvested.

The regulations at § 648.4(b) provide that Federal permit holders must agree as a condition of the permit not to land scup in any state that the Regional Administrator has determined no longer has commercial quota available. Therefore, effective 0001 hrs, l.t., July 2, 1997, through 2400 hrs, l.t., October 31, 1997, further landings of scup in Massachusetts by vessels holding commercial Federal fisheries permits are prohibited for the remainder of the 1997 Summer period, unless additional quota becomes available through a transfer and is announced in the **Federal Register**. Federally permitted dealers are also advised that they may not purchase scup from federally permitted vessels that land in Massachusetts for the remainder of the 1997 Summer period, or until additional quota becomes available.

Classification

This action is required by 50 CFR part 648 and is exempt from review under E.O. 12286.

Authority: 16 U.S.C. 1801 *et seq.*

Dated: July 2, 1997.

Gary Matlock,

Director, Office of Sustainable Fisheries, National Marine Fisheries Service.

[FR Doc. 97–17783 Filed 7–2–97; 3:51 pm]

BILLING CODE 3510–22–F

DEPARTMENT OF COMMERCE

National Oceanic and Atmospheric Administration

50 CFR Part 679

[Docket No. 961107312–7021–02; I.D. 070197C]

Fisheries of the Exclusive Economic Zone Off Alaska; Greenland Turbot in the Bering Sea Subarea of the Bering Sea and Aleutian Islands

AGENCY: National Marine Fisheries Service (NMFS), National Oceanic and Atmospheric Administration (NOAA), Commerce.

ACTION: Closure.

SUMMARY: NMFS is prohibiting directed fishing for Greenland turbot in the Bering Sea subarea of the Bering Sea and Aleutian Islands management area (BSAI). This action is necessary to prevent exceeding the 1997 total allowable catch (TAC) of Greenland turbot in this area.

DATES: Effective 1200 hrs, Alaska local time (A.l.t.), May 19, 1997, until 2400 hrs, A.l.t., December 31, 1997.

FOR FURTHER INFORMATION CONTACT: Mary Furuness, 907–586–7228.

SUPPLEMENTARY INFORMATION: The groundfish fishery in the BSAI exclusive economic zone is managed by NMFS according to the Fishery Management Plan for the Groundfish Fishery of the Bering Sea and Aleutian Islands Area (FMP) prepared by the North Pacific Fishery Management Council under authority of the Magnuson-Stevens Fishery Conservation and Management Act. Fishing by U.S. processors is governed by regulations implementing the FMP at subpart H of 50 CFR part 600 and 50 CFR part 679.

The initial TAC of Greenland turbot for the Bering Sea subarea of the BSAI was established by the Final 1997 Harvest Specifications of Groundfish for the BSAI (62 FR 7168, February 18, 1997) as 5,125 metric tons (mt). See § 679.20(c)(3)(iii). To date, NMFS has not apportioned to the initial TAC of Greenland turbot for the Bering Sea subarea (or Aleutian Islands subarea as appropriate) an amount from the BSAI reserve. Therefore, for purposes of this action, the initial TAC as specified in the final harvest specifications is the final TAC.

In accordance with § 679.20(d)(1)(i), the Administrator, Alaska Region, NMFS (Regional Administrator), determined that the TAC of Greenland turbot specified for the Bering Sea subarea of the BSAI would be reached. Therefore, the Regional Administrator established a directed fishing allowance of 3,325 mt, and set aside the remaining 1,800 mt as bycatch to support other anticipated groundfish fisheries. In accordance with § 679.20(d)(1)(iii), the Regional Administrator finds that this directed fishing allowance was reached. Consequently, NMFS is prohibiting directed fishing for Greenland turbot in the Bering Sea subarea of the BSAI.

Maximum retainable bycatch amounts for applicable gear types may be found in the regulations at § 679.20(e) and (f).

This action responds to the best available information obtained from the fishery. It must be implemented in order to prevent overharvesting the 1997 TAC of Greenland turbot in the Bering Sea subarea of the BSAI. A delay in the effective date is impracticable and contrary to the public interest. The fleet has taken the 1997 TAC of Greenland turbot in the Bering Sea subarea. Further delay could result in overharvest, which would disrupt the FMP's objective of providing sufficient Greenland turbot as bycatch to support other anticipated groundfish fisheries. NMFS finds for good cause that the implementation of this action cannot be delayed for 30 days. Accordingly, under 5 U.S.C. 553(d), a delay in the effective date is hereby waived. The affected fishery was provided notice by news release of a closure 1200 hrs, A.l.t., May 19, 1997, until 2400, A.l.t., December 31, 1997.

Classification

This action is required by § 679.20 and is exempt from review under E.O. 12866.

Authority: 16 U.S.C. 1801 *et seq.*

Dated: July 2, 1997.

Bruce Morehead,

Acting Director, Office of Sustainable Fisheries, National Marine Fisheries Service.

[FR Doc. 97–17914 Filed 7–8–97; 8:45 am]

BILLING CODE 3510–22–P

DEPARTMENT OF COMMERCE

National Oceanic and Atmospheric Administration

50 CFR Part 679

[Docket No. 961126334–7025–02; I.D. 070397A]

Fisheries of the Exclusive Economic Zone Off Alaska, Pacific Ocean Perch in the Western Regulatory Area of the Gulf of Alaska

AGENCY: National Marine Fisheries Service (NMFS), National Oceanic and Atmospheric Administration (NOAA), Commerce.

ACTION: Closure.

SUMMARY: NMFS is closing directed fishing for Pacific ocean perch in the Western Regulatory Area of the Gulf of Alaska (GOA). This action is necessary to prevent exceeding the Pacific ocean perch total allowable catch (TAC) in the Western Regulatory Area of the GOA.

DATES: Effective 1200 hrs, Alaska local time (A.l.t.), July 3, 1997, until 2400 hrs, A.l.t., December 31, 1997.

FOR FURTHER INFORMATION CONTACT: Thomas Pearson, 907–486–6919.

SUPPLEMENTARY INFORMATION: The groundfish fishery in the GOA exclusive economic zone is managed by NMFS according to the Fishery Management Plan for Groundfish of the Gulf of Alaska (FMP) prepared by the North Pacific Fishery Management Council under authority of the Magnuson-Stevens Fishery Conservation and Management Act. Fishing by U.S. vessels is governed by regulations implementing the FMP at subpart H of 50 CFR part 600 and 50 CFR part 679.

The Pacific ocean perch TAC in the Western Regulatory Area of the Gulf of Alaska was established by the Final 1997 Harvest Specifications of Groundfish for the GOA (62 FR 8179, February 24, 1997) as 1,472 metric tons (mt), determined in accordance with § 679.20 (c)(3)(ii).

In accordance with § 679.20 (d)(1)(i), the Administrator, Alaska Region, NMFS (Regional Administration), has determined that the Pacific ocean perch TAC in the Western Regulatory Area will soon be reached. Therefore, the Regional Administrator is establishing a directed fishing allowance of 1,312 mt, and is setting aside the remaining 160 mt as bycatch to support other anticipated groundfish fisheries. In accordance with § 679.20 (d)(1)(iii), the Regional Administrator finds that this directed fishing allowance will soon be reached. Consequently, NMFS is prohibiting directed fishing for the Pacific ocean perch in the Western Regulatory Area.

Maximum retainable bycatch amounts for applicable gear types may be found in the regulations at § 679.20 (e) and (f).

This action responds to the best available information recently obtained from the fishery. It must be implemented immediately to prevent overharvesting the 1997 TAC for Pacific ocean perch in the Western Regulatory Area. A delay in the effective date is impracticable and contrary to public interest. The fleet will soon take the directed fishing allowance for Pacific ocean perch. Further delay would only result in overharvest and disrupt the FMP's objective of allowing incidental catch to be retained throughout the year. NMFS finds for good cause that the implementation of this action cannot be delayed for 30 days. Accordingly, under 5 U.S.C. 553(d), a delay in the effective date is hereby waived.

Classification

This action is required by 50 CFR 679.20 and is exempt from review under E.O. 12866.

Authority: 16 U.S.C. 1801 *et seq.*

Dated: July 3, 1997.

Gary C. Matlock,

Director, Office of Sustainable Fisheries, National Marine Fisheries Service.

[FR Doc. 97–17958 Filed 7–3–97; 3:10 pm]

BILLING CODE 3510–22–P

DEPARTMENT OF COMMERCE

National Oceanic and Atmospheric Administration

50 CFR Part 679

[Docket No. 961126334–7025–02; I.D. 070397B]

Fisheries of the Exclusive Economic Zone Off Alaska; Northern Rockfish in the Western Regulatory Area of the Gulf of Alaska

AGENCY: National Marine Fisheries Service (NMFS), National Oceanic and Atmospheric Administration (NOAA), Commerce.

ACTION: Closure.

SUMMARY: NMFS is closing directed fishing for northern rockfish in the Western Regulatory Area in the Gulf of Alaska (GOA). This action is necessary to prevent exceeding the northern rockfish total allowable catch (TAC) in the Western Regulatory Area of the GOA.

DATES: Effective 1200 hrs, Alaska local time (A.l.t.), July 3, 1997, until 2400 hrs, A.l.t., December 31, 1997.

FOR FURTHER INFORMATION CONTACT: Thomas Pearson, 907–486–6919.

SUPPLEMENTARY INFORMATION: The groundfish fishery in the GOA exclusive economic zone is managed by NMFS according to the Fishery Management Plan for Groundfish of the Gulf of Alaska (FMP) prepared by the North Pacific Fishery Management Council under authority of the Magnuson-Stevens Fishery Conservation and Management Act. Fishing by U.S. vessels is governed by regulations implementing the FMP at subpart H of 50 CFR part 600 and 50 CFR part 679.

The northern rockfish TAC in the Western Regulatory Area of the Gulf of Alaska was established by the Final 1997 Harvest Specifications of Groundfish for the GOA (62 FR 8179, February 24, 1997) as 840 metric tons (mt), determined in accordance with § 679.20(c)(3)(ii).

In accordance with § 679.20(d)(1)(i), the Administrator, Alaska Region, NMFS (Regional Administrator), has determined that the northern rockfish TAC in the Western Regulatory Area will soon be reached. Therefore, the Regional Administrator is establishing a directed fishing allowance of 790 mt, and is setting aside the remaining 50 mt as bycatch to support other anticipated groundfish fisheries. In accordance with § 679.20(d)(1)(iii), the Regional Administrator finds that this directed fishing allowance will soon be reached. Consequently, NMFS is prohibiting directed fishing for northern rockfish in the Western Regulatory Area of the GOA.

Maximum retainable bycatch amounts for applicable gear types may be found in the regulations at § 679.20 (e) and (f).

This action responds to the best available information recently obtained from the fishery. It must be implemented immediately to prevent overharvesting the 1997 TAC for northern rockfish in the Western Regulatory Area of the GOA. A delay in the effective date is impracticable and contrary to public interest. The fleet will soon take the directed fishing allowance for northern rockfish. Further delay would only result in overharvest and disrupt the FMP's objective of allowing incidental catch to be retained throughout the year. NMFS finds for good cause that the implementation of this action cannot be delayed for 30 days. Accordingly, under 5 U.S.C. 553(d), a delay in the effective date is hereby waived.

Classification

This action is required by 50 CFR 679.20 and is exempt from review under E.O. 12866.

Authority: 16 U.S.C. 1801 *et seq.*

Dated: July 3, 1997.

Gary C. Matlock,

Director, Office of Sustainable Fisheries, National Marine Fisheries Service.

[FR Doc. 97–17959 Filed 7–3–97; 3:10 pm]

BILLING CODE 3310–22–P

DEPARTMENT OF COMMERCE

National Oceanic and Atmospheric Administration

50 CFR Part 679

[Docket No. 961126334–7025–02; I.D. 070397F]

Fisheries of the Exclusive Economic Zone Off Alaska, Pacific Ocean Perch in the Central Regulatory Area of the Gulf of Alaska

AGENCY: National Marine Fisheries Service (NMFS), National Oceanic and Atmospheric Administration (NOAA), Commerce.

ACTION: Closure.

SUMMARY: NMFS is closing directed fishing for Pacific ocean perch in the Central Regulatory Area of the Gulf of Alaska (GOA). This action is necessary to prevent exceeding the Pacific ocean perch total allowable catch (TAC) in the Central Regulatory Area of the GOA.

DATES: Effective 1200 hrs, Alaska local time (A.l.t.), July 7, 1997, until 2400 hrs, A.l.t., December 31, 1997.

FOR FURTHER INFORMATION CONTACT: Thomas Pearson, 907–486–6919.

SUPPLEMENTARY INFORMATION: The groundfish fishery in the GOA exclusive economic zone is managed by NMFS according to the Fishery Management Plan for Groundfish of the Gulf of Alaska (FMP) prepared by the North Pacific Fishery Management Council under authority of the Magnuson-Stevens Fishery Conservation and Management Act. Fishing by U.S. vessels is governed by regulations implementing the FMP at subpart H of 50 CFR part 600 and 50 CFR part 679.

The Pacific ocean perch TAC in the Central Regulatory Area of the Gulf of Alaska was established by the Final 1997 Harvest Specifications of Groundfish for the GOA (62 FR 8179, February 24, 1997) as 5,352 metric tons (mt), determined in accordance with § 679.20(c)(3)(ii).

In accordance with § 679.20(d)(1)(i), the Administrator, Alaska Region, NMFS (Regional Administration), has determined that the Pacific ocean perch TAC in the Central Regulatory Area will soon be reached. Therefore, the Regional Administrator is establishing a directed fishing allowance of 4,752 mt, and is setting aside the remaining 600 mt as bycatch to support other anticipated groundfish fisheries. In accordance with § 679.20(d)(1)(iii), the Regional Administrator finds that this directed fishing allowance will soon be reached. Consequently, NMFS is prohibiting directed fishing for Pacific ocean perch in the Central Regulatory Area.

Maximum retainable bycatch amounts for applicable gear types may be found in the regulations at § 679.20(e) and (f).

This action responds to the best available information recently obtained from the fishery. It must be implemented immediately to prevent overharvesting the 1997 TAC for Pacific ocean perch in the Central Regulatory Area. A delay in the effective date is impracticable and contrary to public interest. The fleet will soon take the directed fishing allowance for Pacific ocean perch. Further delay would only result in overharvest and disrupt the FMP's objective of allowing incidental catch to be retained throughout the year. NMFS finds for good cause that the implementation of this action cannot be delayed for 30 days. Accordingly, under 5 U.S.C. 553(d), a delay in the effective date is hereby waived.

Classification

This action is required by 50 CFR 679.20 and is exempt from review under E.O. 12866.

Authority: 16 U.S.C. 1801 *et seq.*

Dated: July 3, 1997.

Gary C. Matlock,

Director, Office of Sustainable Fisheries, National Marine Fisheries Service.

[FR Doc. 97–18018 Filed 7–3–97; 4:51 pm]

BILLING CODE 3510–22–P

DEPARTMENT OF COMMERCE

National Oceanic and Atmospheric Administration

50 CFR Part 679

[Docket No. 961126334–7025–02; I.D. 070397D]

Fisheries of the Exclusive Economic Zone Off Alaska; ''Other Rockfish'' Species Group in the Eastern Regulatory Area of the Gulf of Alaska

AGENCY: National Marine Fisheries Service (NMFS), National Oceanic and Atmospheric Administration (NOAA), Commerce.

ACTION: Closure.

SUMMARY: NMFS is closing the directed fishery for the ''other rockfish'' species group in the Eastern Regulatory Area of the Gulf of Alaska. This action is necessary to prevent exceeding the ''other rockfish'' species group total allowable catch (TAC) in the Eastern Regulatory Area.

DATES: Effective 12 noon, Alaska local time (A.l.t.), July 7, 1997, until 12 midnight, A.l.t., December 31, 1997.

FOR FURTHER INFORMATION CONTACT: Mary Furuness, 907–586–7228.

SUPPLEMENTARY INFORMATION: The groundfish fishery in the GOA exclusive economic zone is managed by NMFS according to the Fishery Management Plan for Groundfish of the Gulf of Alaska (FMP) prepared by the North Pacific Fishery Management Council under authority of the Magnuson-Stevens Fishery Conservation and Management Act. Fishing by U.S. vessels is governed by regulations implementing the FMP at subpart H of 50 CFR part 600 and 50 CFR part 679.

In accordance with § 679.20(c)(3)(ii), the ''other rockfish'' species group TAC for the Eastern Regulatory Area was established by the Final 1997 Harvest Specifications of Groundfish (62 FR 8179, February 24, 1997) as 1,500 metric tons (mt).

The Administrator, Alaska Region, NMFS, (Regional Administrator) has determined, in accordance with § 679.20(d)(1), that the ''other rockfish'' species group TAC in the Eastern Regulatory Area soon will be reached. Therefore, the Regional Administrator has established a directed fishing allowance of 1,383 mt, with consideration that 117 mt will be taken as incidental catch in directed fishing for other species in the Eastern Regulatory Area. The Regional Administrator has determined that the directed fishing allowance has been reached. Consequently, NMFS is prohibiting directed fishing for the ''other rockfish'' species group in the Eastern Regulatory Area.

Maximum retainable bycatch amounts for applicable gear types may be found in the regulations at § 679.20(e).

This action responds to the best available information recently obtained from the fishery. It must be implemented immediately to prevent overharvesting of the 1997 TAC for ''other rockfish'' in the Eastern Regulatory Area. A delay in the effective date is impracticable and contrary to public interest. The fleet has already taken the directed fishing allowance for ''other rockfish''. Further delay would only result in overharvest which would disrupt the FMP's objective of providing sufficient ''other rockfish'' as bycatch to support other anticipated groundfish fisheries. NMFS finds for good cause that the implementation of this action cannot be delayed for 30 days. Accordingly, under 5 U.S.C. 553(d), a delay in the effective date is hereby waived.

Classification

This action is taken under § 679.20 and is exempt from OMB review under E.O. 12866.

Authority: 16 U.S.C. 1801 *et seq.*

Dated: July 3, 1997.

Gary C. Matlock,

Director, Office of Sustainable Fisheries, National Marine Fisheries Service

[FR Doc. 97–18017 Filed 7–3–97; 4:51 pm]

BILLING CODE 3510–22–P

Proposed Rules

Federal Register
Vol. 62, No. 131
Wednesday, July 9, 1997

This section of the FEDERAL REGISTER contains notices to the public of the proposed issuance of rules and regulations. The purpose of these notices is to give interested persons an opportunity to participate in the rule making prior to the adoption of the final rules.

DEPARTMENT OF AGRICULTURE

Agricultural Marketing Service

7 CFR Part 920

[Docket No. FV97–920–2 PR]

Kiwifruit Grown in California; Proposed Relaxation in Pack Requirements

AGENCY: Agricultural Marketing Service, USDA.

ACTION: Proposed rule.

SUMMARY: This proposal invites comments on revisions to pack requirements for Size 42 and Size 45 kiwifruit under the Federal marketing order for kiwifruit grown in California. This rule would increase the size variation tolerance for Size 42 kiwifruit from 5 percent, by count, to 10 percent, by count, and would increase the size variation tolerance for Size 45 kiwifruit from 10 percent, by count, to 25 percent, by count. This relaxation was recommended by the Kiwifruit Administrative Committee (committee), the agency responsible for local administration of the marketing order. The committee expects this rule to reduce handler costs, increase grower returns, and allow the kiwifruit industry to meet the increased demand for lower priced kiwifruit.

DATES: Comments must be received by August 8, 1997.

ADDRESSES: Interested persons are invited to submit written comments concerning this proposal. Comments must be submitted in triplicate to the Docket Clerk, Fruit and Vegetable Division, AMS, USDA, P.O. Box 96456, room 2525–S, Washington, DC 20090–6456, FAX (202) 720–5698. All comments should reference the docket number and the date and page number of this issue of the **Federal Register** and will be made available for public inspection in the Office of the Docket Clerk during regular business hours.

FOR FURTHER INFORMATION CONTACT: Rose Aguayo, Marketing Specialist, or Kurt Kimmel, Regional Manager, California Marketing Field Office, Marketing Order Administration Branch, Fruit and Vegetable Division, AMS, USDA, 2202 Monterey St., suite 102B, Fresno, California 93721, telephone (209) 487–5901, FAX (209) 487–5906. Small businesses may request information on compliance with this regulation by contacting Jay Guerber, Marketing Order Administration Branch, Fruit and Vegetable Division, AMS, USDA, P.O. Box 96456, room 2525–S, Washington, DC 20090–6456, telephone (202) 720–2491, FAX (202) 720–5698.

SUPPLEMENTARY INFORMATION: This proposed rule is issued under Marketing Order No. 920 (7 CFR part 920), as amended, regulating the handling of kiwifruit grown in California, hereinafter referred to as the ''order.'' The order is effective under the Agricultural Marketing Agreement Act of 1937, as amended (7 U.S.C. 601–674), hereinafter referred to as the ''Act.''

The Department of Agriculture (Department) is issuing this proposed rule in conformance with Executive Order 12866.

This proposed rule has been reviewed under Executive Order 12988, Civil Justice Reform. This action is not intended to have retroactive effect. This proposed rule would not preempt any State or local laws, regulations, or policies, unless they present an irreconcilable conflict with this rule.

The Act provides that administrative proceedings must be exhausted before parties may file suit in court. Under section 608c(15)(A) of the Act, any handler subject to an order may file with the Secretary a petition stating that the order, any provision of the order, or any obligation imposed in connection with the order is not in accordance with law and request a modification of the order or to be exempted therefrom. A handler is afforded the opportunity for a hearing on the petition. After the hearing the Secretary would rule on the petition. The Act provides that the district court of the United States in any district in which the handler is an inhabitant, or has his or her principle place of business, has jurisdiction in equity to review the Secretary's ruling on the petition, provided a bill in equity is filed not later than 20 days after the date of the entry of the ruling.

This proposal invites comments on revisions to pack requirements for Size 42 and Size 45 kiwifruit under the Federal marketing order for kiwifruit grown in California. This rule would increase the size variation tolerance for Size 42 kiwifruit from 5 percent, by count, to 10 percent, by count, and would increase the size variation tolerance for Size 45 kiwifruit from 10 percent, by count, to 25 percent, by count.

Section 920.52 authorizes the establishment of pack requirements. Section 920.302(a)(4) of the rules and regulations outlines the pack requirements for fresh shipments of California kiwifruit. Under § 920.302(a)(4)(I) of the rules and regulations, kiwifruit packed in containers with cell compartments, cardboard fillers, or molded trays shall be of proper size and fairly uniform in size. Section 920.302(a)(4)(ii) outlines pack requirements for kiwifruit packed in cell compartments, cardboard fillers or molded trays and includes a table that specifies numerical size designations and the size variation tolerances. It also outlines pack requirements for kiwifruit packed in bags, volume fill or bulk containers, and includes a separate table that specifies numerical size designations and size variation tolerances. This section provides that not more than 10 percent, by count of the containers in any lot may fail to meet pack requirements. It also provides that not more than 5 percent, by count, of kiwifruit in any container, (except that for Size 45 kiwifruit, the tolerance, by count, in any one container, may not be more than 10 percent) may fail to meet pack requirements. This size variation tolerance does not apply to other pack requirements such as how the fruit fills the cell compartments, cardboard fillers, or molded trays, or any weight requirements.

Prior to the 1995–1996 season, handlers were experiencing difficulty meeting the size variation tolerance for Size 45 kiwifruit. Size 45 is the minimum size. The committee determined that the best solution was to increase the size variation tolerance, by count, in any one container, for Size 45 kiwifruit. Section 920.302 (a)(4) was revised by a final rule issued June 21, 1995 (60 FR 32257) to include a provision that increased the size variation tolerance, by count, in any one

container, from 5 percent to 10 percent for Size 45 kiwifruit.

This increased size variation tolerance for Size 45 kiwifruit has been utilized for two seasons. Handlers are still experiencing difficulty discerning if size variation tolerances for smaller fruit are being met during the packing process.

As the size of the kiwifruit increases, so does the size of the variation allowed. In the larger kiwifruit sizes, failure to meet the required size variation standards results in packs that are visibly irregular in size. In Size 42 and Size 45 packs, however, when the respective 5 and 10 percent tolerances are exceeded, the variation is difficult to detect visually. A size variation of ¼-inch (6.4 mm) difference is allowed between the widest and narrowest kiwifruit in any Size 42 container utilizing cell compartments, cardboard fillers or molded trays and a ⅜-inch (9.5 mm) size variation difference is allowed between the widest and narrowest kiwifruit in a Size 42 bag, volume fill or bulk container. A ¼-inch (6.4 mm) size variation difference is allowed between the widest and narrowest kiwifruit in any Size 45 container.

Packers must separate the round and flat shaped kiwifruit into two different containers in order to meet the size variation requirements. During the packing operation, a mechanical sizer routinely sorts the kiwifruit by shape and size. The kiwifruit which is missed by the mechanical sizer must be manually sorted by the handler. If size variation tolerances are not being met, packers must slow down the pack line and increase efforts to separate the round and flat kiwifruit to ensure that current size variation requirements are met. Since it is not economically feasible for each handler to be equipped with a caliper to measure size variation, they rely on their visual judgement. During inspection, calipers are utilized by the inspectors to determine if the size variation is met for Size 42 and Size 45 containers. The industry views this separation of Size 42 and 45 round and flat shaped kiwifruit into two different containers by shape as an added cost, that is particularly detrimental because this fruit returns little if any money back to the grower. The higher costs of sizing the fruit during the packing operation may have cost the industry sales as well.

Further, this sizing of kiwifruit may not be apparent to consumers. Usually a pallet of Size 42 kiwifruit includes containers of round fruit and containers of flat fruit. When a pallet of Size 42 kiwifruit reaches the retailer, a container of round fruit may be displayed. As the kiwifruit is sold, a container of the Size 42 flat fruit may be commingled with the remaining round fruit. The consumer would then see this commingled fruit with slightly different shapes on display. The size variation standards that the packer strived so hard to stay within during the packing process are erased.

The committee met on April 16, 1997, and recommended by a vote of eight in favor and one opposed to relax the pack requirements in effect under the order pertaining to size variation tolerances for Size 42 and Size 45 kiwifruit. The committee recommended increasing size variation tolerances for kiwifruit, in any one container, from 5 percent, by count, to 10 percent, by count, for Size 42 kiwifruit and from 10 percent, by count, to 25 percent, by count, for Size 45 kiwifruit and further recommended that this rule be effective in September for the 1997–1998 season. The season normally begins the end of September or the first week of October. The increased size variation tolerances would apply to any container of kiwifruit.

This proposed rule would reduce costs for handlers by allowing them to operate in a more efficient and cost-effective manner and would enable the industry to meet the increased demand in the marketplace for lower priced, uniform containers of kiwifruit. Through these cost savings, growers would be expected to receive higher returns.

There is support in the industry to increase these size variation tolerances. The one committee member who opposed the recommendation believes it would lower the quality of California kiwifruit.

Pursuant to requirements set forth in the Regulatory Flexibility Act (RFA), the Agricultural Marketing Service (AMS) has considered the economic impact of this rule on small entities. Accordingly, the AMS has prepared this initial regulatory flexibility analysis.

The purpose of the RFA is to fit regulatory actions to the scale of business subject to such actions in order that small businesses will not be unduly or disproportionately burdened. Marketing orders issued pursuant to the Act, and rules issued thereunder, are unique in that they are brought about through group action of essentially small entities acting on their own behalf. Thus, both statutes have small entity orientation and compatibility.

There are approximately 60 handlers of California kiwifruit subject to regulation under the order and approximately 450 kiwifruit producers in the production area. Small agricultural service firms are defined by the Small Business Administration (13 CFR 121.601) as those whose annual receipts are less than $5,000,000, and small agricultural producers have been defined as those having annual receipts of less than $500,000. One of the 60 handlers subject to regulation has annual kiwifruit sales of at least $5,000,000, and the remaining 59 handlers have sales less than $5,000,000, excluding receipts from any other sources. Ten of the 450 producers subject to regulation have annual sales of at least $500,000, and the remaining 440 producers have sales less than $500,000, excluding receipts from any other sources. Therefore, a majority of handlers and producers of California kiwifruit may be classified as small entities.

Section 920.52 authorizes the establishment of pack requirements. Section 920.302(a)(4)(ii) outlines pack requirements for kiwifruit packed in any container and contains tables that specify numerical size designations and size variation tolerances. This rule would increase the size variation tolerance for Size 42 kiwifruit from 5 percent, by count, to 10 percent, by count, and would increase the size variation tolerance for Size 45 kiwifruit from 10 percent, by count, to 25 percent, by count. This relaxation was recommended by the committee, the agency responsible for local administration of the marketing order.

In the larger kiwifruit sizes, failure to meet the required size variation standards results in packs that are visibly irregular in size. In Size 42 and Size 45, however, when the respective 5 and 10 percent tolerances are exceeded, the variation is difficult to detect visually. However, packers must separate the round and flat shaped kiwifruit into two different containers in order to meet the size variation requirements within each container for Size 42 and Size 45 kiwifruit. The industry views this separation of Size 42 and 45 round and flat shaped kiwifruit into two different containers by shape as an added cost, that is particularly detrimental because this fruit returns little if any money back to the grower. The higher costs of sizing the fruit during the packing operation may have cost the industry sales as well.

Further, this sizing of kiwifruit may not be apparent to consumers. Usually a pallet of Size 42 kiwifruit includes containers of round fruit and containers of flat fruit. When a pallet of Size 42 kiwifruit reaches the retailer, a container of round fruit may be displayed. As the kiwifruit is sold, a container of the Size 42 flat fruit may be commingled with the remaining round fruit and the current size variation standards that the packer strived so hard

to stay within during the packing process are erased.

This proposed rule should reduce costs for handlers by allowing them to operate in a more efficient and cost-effective manner and to meet the increased demand in the marketplace for lower priced, uniform containers of kiwifruit.

Approximately 74 percent of all kiwifruit shipped during the 1996–1997 season was shipped in bags, volume fill or bulk containers. The proposed increase in tolerance in Size 42 from 5 percent, by count, to 10 percent, by count, would increase the number of kiwifruit that may exceed the ⅜″ size variation requirement in bags, volume fill, or bulk containers. Since the individual fruit weight of a Size 42 kiwifruit is approximately 0.160 ounces, a 22-pound volume fill container of Size 42 kiwifruit would contain approximately 138 fruit. An increased tolerance of 10 percent per container would allow approximately 14 kiwifruit to exceed the ⅜″ tolerance versus 7 kiwifruit at the 5 percent tolerance rate. As a result, handlers would be able to operate more efficiently with this increased tolerance.

The proposed increase in tolerance in Size 45 from 10 percent, by count, to 25 percent, by count, would increase the number of kiwifruit that may exceed the ¼″ size variation requirement. Since the individual fruit weight of a Size 45 kiwifruit is approximately 0.145 ounces, a 22-pound volume fill container of Size 45 kiwifruit contains approximately 151 kiwifruit. An increased tolerance of 25 percent, by count, per container would allow 37 kiwifruit out of 151 kiwifruit to exceed the ¼″ tolerance versus 15 kiwifruit at the 10 percent tolerance rate. With this increased tolerance, handlers expect to be able to pack round and flat shaped kiwifruit into one container, thereby reducing costs.

This action is not expected to reduce the quality of the kiwifruit pack. Consumers would not see any changes to the product at retail, because the produce staff at the stores already commingle round and flat kiwifruit in their display bins. Also, the allowed variation would be at a reasonable level and retailers would still receive a fairly uniform box of fruit.

California kiwifruit packing operations range from very small operations, employing as few as 2 persons, to large operations employing as many as 150 people per shift. The 1997–1998 season crop estimate is projected to be 10 to 12 million tray equivalents. A tray equivalent is 7 pounds of fruit. Handlers pack from several hundred to over 25,000 tray equivalents during the season. Packing costs for volume fill containers range from approximately $0.25 to 0.75 per container. The 60 packing sheds can be divided into 3 size categories of small, medium, and large. Small sheds would consist of 25 employees or less, medium sheds 26–75 employees, and large sheds would consist of 76 or more employees. The committee anticipates that labor devoted to packout, on average, would be decreased by 1 to 3 employees per packing shed. The committee estimates cost savings of approximately $0.01 per tray equivalent. Based on a projected crop estimate of 10 to 12 million tray equivalents, a savings of $100,000 to $120,000 could be realized for the 1997–1998 season.

The committee discussed numerous alternatives to this change, including eliminating all pack requirements, increasing the size variation tolerance to establish a Size 42–45 container by blending the packing of Size 42 and Size 45 kiwifruit into one container, reducing the minimum size from Size 45 to Size 49, eliminating Size 45 and making Size 42 the minimum size, making Size 45 requirements more restrictive, reducing the maximum to 53 kiwifruit in the 8 pound sample, lowering the minimum maturity to 6.2 percent, and increasing the degree, or size of the variation allowed, from ¼-inch to ⅜-inch for Size 45 kiwifruit. After lengthy discussion, all of these alternatives were deemed unacceptable. The general consensus was that eliminating all pack requirements could adversely affect quality. The committee wishes to continue utilizing separate Size 42 and Size 45 containers at this time because handlers are able to market each size. Reducing the minimum size from Size 45 to Size 49 would not benefit the industry because growers and handlers could not make a profit growing, packing and selling Size 49.

It was the general consensus that eliminating Size 45 and making Size 42 the minimum size, or making Size 45 requirements more restrictive, by reducing the maximum to 53 kiwifruit in the 8 pound sample, would impose more stringent requirements on California growers and handlers and eliminate salable fruit from markets. Committee members deemed lowering the minimum maturity to 6.2 percent unacceptable as kiwifruit picked below the current minimum maturity of 6.5 percent may shrivel in cold storage. The last alternative considered was to increase the degree, or size of the variation allowed, from ¼-inch to ⅜-inch for Size 45 kiwifruit. It was the consensus of the committee that such an increase would allow undesired blending of undersize kiwifruit. The end result would be a container with visibly different fruit sizes, including undersize fruit. This alternative was deemed not acceptable as the industry desires to pack a uniform container of kiwifruit.

This proposed rule would relax pack requirements under the kiwifruit marketing order and these requirements would be applied uniformly to all handlers. This action would not impose any additional reporting or recordkeeping requirements on either small or large kiwifruit handlers. As with all Federal marketing order programs, reports and forms are periodically reviewed to reduce information requirements and duplication by industry and public sector agencies.

The Department has not identified any relevant Federal rules that duplicate, overlap or conflict with this proposed rule.

The committee's meeting was widely publicized throughout the kiwifruit industry and all interested persons were invited to attend the meeting and participate in committee deliberations on all issues. Like all committee meetings, the April 16, 1997, meeting was a public meeting and all entities, both large and small, were able to express views on this issue. Finally, interested persons are invited to submit information on the regulatory and informational impacts of this action on small businesses.

A 30-day comment period is provided to allow interested persons to respond to this proposal. All written comments timely received will be considered before a final determination is made on this matter.

List of Subjects in 7 CFR Part 920

Kiwifruit, Marketing agreements.

For the reasons set forth in the preamble, 7 CFR part 920 is proposed to be amended as follows:

PART 920—KIWIFRUIT GROWN IN CALIFORNIA

1. The authority citation for 7 CFR part 920 continues to read as follows:

Authority: 7 U.S.C. 601–674.

2. In § 920.302 paragraph (a)(4)(ii) is amended by revising the last sentence to read as follows:

§ 920.302 Grade, size, pack, and container regulations.

(a) * * *

(4) * * * (ii)* * * Not more than 10 percent, by count of the containers in any lot and not more than 5 percent, by count, of kiwifruit in any container, (except that for Size 42 kiwifruit, the

tolerance, by count, in any one container, may not be more than 10 percent and except that for Size 45 kiwifruit, the tolerance, by count, in any one container, may not be more than 25 percent) may fail to meet the requirements of this paragraph.

Dated: July 2, 1997.

Eric M. Forman,

Director, Fruit and Vegetable Division.

[FR Doc. 97–17866 Filed 7–8–97; 8:45 am]

BILLING CODE 3410–02–P

DEPARTMENT OF THE TREASURY

Office of the Comptroller of the Currency

12 CFR Part 9

[Docket No. 97–14]

RIN 1557–AB63

Fiduciary Activities of National Banks

AGENCY: Office of the Comptroller of the Currency, Treasury.

ACTION: Notice of proposed rulemaking.

SUMMARY: The Office of the Comptroller of the Currency (OCC) is proposing to amend the rules governing national banks' fiduciary activities by issuing an interpretive ruling to clarify the types of investment advisory activities that come within the scope of these rules.

DATES: Comments must be received by September 8, 1997.

ADDRESSES: Comments should be directed to: Communications Division, Office of the Comptroller of the Currency, 250 E Street, SW, Washington, DC 20219, Attention: Docket No. 97–14. Comments will be available for public inspection and photocopying at the same location. In addition, comments may be sent by fax to (202) 874–5274, or by electronic mail to regs.comments@occ.treas.gov.

FOR FURTHER INFORMATION CONTACT: Andrew Gutierrez, Attorney, Legislative and Regulatory Activities Division, (202) 874–5090; Lisa Lintecum, Director, Asset Management, (202) 874–5419; Dean Miller, Special Advisor, Fiduciary Activities, (202) 874–4852; Laurie Edlund, National Bank Examiner, Fiduciary Activities, (202) 874–3828; Donald Lamson, Assistant Director, Securities and Corporate Practices Division, (202) 874–5210.

SUPPLEMENTARY INFORMATION:

Background

On December 30, 1996, the OCC issued a final rule revising 12 CFR part 9, effective January 29, 1997 (61 FR 68543). Among other changes, the final rule revised the terms that specify the types of activities governed by part 9. In particular, the final rule replaced the former regulation's terms ''fiduciary'' and ''managing agent'' with the term ''fiduciary capacity,'' found at § 9.2(e). Under the revised part 9, if a national bank acts in a fiduciary capacity while engaging in a certain activity, then part 9 governs that activity.

One of the fiduciary capacities set forth in § 9.2(e) is ''investment adviser, if the bank receives a fee for its investment advice.'' The concept of investment adviser for a fee is new to part 9, and the OCC's addition of this term to the list of fiduciary capacities raised questions from the banking industry about what activities entail providing investment advice for a fee.

Interpretive Letter #769

In response to these inquiries, the OCC issued Interpretive Letter #769 (January 28, 1997). In that interpretive letter, the OCC clarified that ''investment adviser'' generally means a national bank that is providing advice or recommendations concerning the purchase or sale of specific securities, such as a national bank engaged in portfolio advisory and management activities (including acting as investment adviser to a mutual fund). Moreover, the OCC explained that the qualifying phrase ''if the bank receives a fee for its investment advice'' excludes from part 9's coverage those activities in which investment advice is merely incidental to other services. Generally, if a national bank receives a fee for providing certain services, and a significant portion of that fee is attributable to the provision of investment advice (*i.e.*, advice or recommendations concerning the purchase or sale of specific securities), then part 9 governs that activity. In effect, the OCC explained, the new term ''fiduciary capacity'' generally includes those activities that the former regulation covered and does not capture additional lines of business.

In the interpretive letter, the OCC indicated that it generally will consider full-service brokerage services to involve investment advice for a fee only if a non-bank broker engaged in that activity is considered an investment adviser under the Investment Advisers Act of 1940 (Advisers Act) (15 U.S.C. 80b–1 *et seq.*).[1] The Advisers Act, at section 202(a)(11)(C) (15 U.S.C. 80b–2(a)(11)(C)), excludes from its definition of investment adviser any broker or dealer whose performance of investment advisory services is solely incidental to the conduct of its business as a broker or dealer and who receives no special compensation for providing investment advice.

The OCC also addressed in the interpretive letter whether certain other activities came within the scope of part 9.

Proposal

The OCC proposes to add a new interpretation to part 9, at § 9.101, codifying the clarification contained in Interpretive Letter #769. To the extent that particular facts require additional clarifications, the OCC will address those situations on a case-by case basis as necessary.

Request for Comments

The OCC invites comments on any aspect of this proposal, including suggestions on whether any specific activities should be added to or removed from the list of activities that generally do not involve investment advice for a fee, found at proposed § 9.101(b)(2).

Regulatory Flexibility Act

Pursuant to section 605(b) of the Regulatory Flexibility Act, the OCC certifies that this proposal will not have a significant economic impact on a substantial number of small entities in accord with the spirit and purposes of the Regulatory Flexibility Act (5 U.S.C. 601 *et seq.*). Accordingly, a regulatory flexibility analysis is not required. The proposal merely clarifies the scope of the regulation, and does not add any new requirements.

Executive Order 12866

The Office of Management and Budget has concurred with the OCC's determination that this proposal is not a significant regulatory action under Executive Order 12866.

Unfunded Mandates Reform Act of 1995

The OCC has determined that this proposal will not result in expenditures by state, local, and tribal governments, or by the private sector, of $100 million or more in any one year. Accordingly, a budgetary impact statement is not required under section 202 of the Unfunded Mandates Reform Act of 1995. The proposal merely clarifies the scope of the regulation, and does not add any new requirements.

[1] Banks are excluded from the Advisers Act's definition of investment adviser. 15 U.S.C. 80b–2(a)(11)(A).

List of Subjects in 12 CFR Part 9

Estates, Investments, National banks, Reporting and recordkeeping requirements, Trusts and trustees.

Authority and Issuance

For the reasons set out in the preamble, chapter I of title 12 of the Code of Federal Regulations is proposed to be amended as follows:

PART 9—FIDUCIARY ACTIVITIES OF NATIONAL BANKS

1. The authority citation for part 9 continues to read as follows:

Authority: 12 U.S.C. 24(Seventh), 92a, and 93a; 15 U.S.C. 78q, 78q–1, and 78w.

2. A new § 9.101 is added to read as follows:

§ 9.101 Acting as investment adviser for a fee.

(a) *In general.* As used in the definition of ''fiduciary capacity'' at § 9.2(e), *investment adviser* generally means a national bank that provides advice or recommendations concerning the purchase or sale of specific securities, such as a national bank engaged in portfolio advisory and management activities (including acting as investment adviser to a mutual fund). The qualifying phrase ''if the bank receives a fee for its investment advice'' excludes those activities in which the investment advice is merely incidental to other services.

(b) *Specific activities*—(1) *Full-service brokerage.* Engaging in full-service brokerage may entail providing investment advice for a fee, depending upon the commission structure and specific facts. In making this determination, the OCC will consider full-service brokerage to involve investment advice for a fee if a non-bank broker engaged in that activity is considered an investment adviser under the Investment Advisers Act of 1940 (15 U.S.C. 80b–1 *et seq.*).

(2) *Activities not involving investment advice for a fee.* The following activities generally do not entail providing investment advice for a fee:

(i) Financial advice and counseling, including strategic planning of a financial nature, merger and acquisition advisory services, advisory and structuring services related to project finance transactions, and providing market economic information to customers in general;

(ii) Client-directed investment activities where the fee does not depend on the provision of investment advice;

(iii) Investment advice incidental to acting as a municipal securities dealer;

(iv) Real estate asset management;

(v) Real estate consulting;

(vi) Advice concerning bridge loans;

(vii) Services for homeowners' associations;

(viii) Tax planning and structuring advice; and

(ix) Investment advice authorized by the OCC under 12 U.S.C. 24(Seventh) as an incidental power necessary to carry on the business of banking.

Dated: July 2, 1997.

Eugene A. Ludwig,

Comptroller of the Currency.

[FR Doc. 97–17792 Filed 7–8–97; 8:45 am]

BILLING CODE 4810–33–P

DEPARTMENT OF TRANSPORTATION

Federal Aviation Administration

14 CFR Part 39

[Docket No. 97–NM–69–AD]

RIN 2120–AA64

Airworthiness Directives; Turbo-Propeller Powered General Dynamics (Convair) Model 240, 340, and 440 Series Airplanes

AGENCY: Federal Aviation Administration, DOT.

ACTION: Notice of proposed rulemaking (NPRM).

SUMMARY: This document proposes the adoption of a new airworthiness directive (AD) that is applicable to various turbo-propeller powered General Dynamics (Convair) Model 240, 340, and 440 series airplanes. This proposal would require revising the Airplane Flight Manual (AFM) to modify the limitation that prohibits positioning the power levers below the flight idle stop during flight, and to provide a statement of the consequences of positioning the power levers below the flight idle stop during flight. This proposal is prompted by incidents and accidents involving airplanes equipped with turboprop engines in which the ground propeller beta range was used improperly during flight. The actions specified by the proposed AD are intended to prevent loss of airplane controllability, or engine overspeed and consequent loss of engine power caused by the power levers being positioned below the flight idle stop while the airplane is in flight.

DATES: Comments must be received by August 18, 1997.

ADDRESSES: Submit comments in triplicate to the Federal Aviation Administration (FAA), Transport Airplane Directorate, ANM–103, Attention: Rules Docket No. 97–NM–69–AD, 1601 Lind Avenue, SW., Renton, Washington 98055–4056. Comments may be inspected at this location between 9:00 a.m. and 3:00 p.m., Monday through Friday, except Federal holidays.

FOR FURTHER INFORMATION CONTACT: Frank Hoerman, Aerospace Engineer, Flight Test Branch, ANM–160L, FAA, Los Angeles Aircraft Certification Office, 3960 Paramount Boulevard, Lakewood, California 90712; telephone (562) 527–5371; fax (562) 625–5210.

SUPPLEMENTARY INFORMATION:

Comments Invited

Interested persons are invited to participate in the making of the proposed rule by submitting such written data, views, or arguments as they may desire. Communications shall identify the Rules Docket number and be submitted in triplicate to the address specified above. All communications received on or before the closing date for comments, specified above, will be considered before taking action on the proposed rule. The proposals contained in this notice may be changed in light of the comments received.

Comments are specifically invited on the overall regulatory, economic, environmental, and energy aspects of the proposed rule. All comments submitted will be available, both before and after the closing date for comments, in the Rules Docket for examination by interested persons. A report summarizing each FAA-public contact concerned with the substance of this proposal will be filed in the Rules Docket.

Commenters wishing the FAA to acknowledge receipt of their comments submitted in response to this notice must submit a self-addressed, stamped postcard on which the following statement is made: ''Comments to Docket Number 97–NM–69–AD.'' The postcard will be date stamped and returned to the commenter.

Availability of NPRMs

Any person may obtain a copy of this NPRM by submitting a request to the FAA, Transport Airplane Directorate, ANM–103, Attention: Rules Docket No. 97–NM–69–AD, 1601 Lind Avenue, SW., Renton, Washington 98055–4056.

Discussion

In recent years, the FAA has received reports of 14 incidents and/or accidents involving intentional or inadvertent operation of the propellers in the ground beta range during flight on airplanes equipped with turboprop

engines. (For the purposes of this proposal, Beta is defined as the range of propeller operation intended for use during taxi, ground idle, or reverse operations as controlled by the power lever settings aft of the flight idle stop.)

Five of the fourteen in-flight beta occurrences were classified as accidents. In each of these five cases, operation of the propellers in the beta range occurred during flight. Operation of the propellers in the beta range during flight, if not prevented, could result in loss of airplane controllability, or engine overspeed with consequent loss of engine power.

Communication between the FAA and the public during a meeting held on June 11–12, 1996, in Seattle, Washington, revealed a lack of consistency of the information on in-flight beta operation contained in the FAA-approved Airplane Flight Manual (AFM) for airplanes that are not certificated for in-flight operation with the power levers below the flight idle stop. (Airplanes that are certificated for this type of operation are not affected by the above-referenced conditions.)

FAA's Determinations

The FAA has examined the circumstances and reviewed all available information related to the incidents and accidents described previously. The FAA finds that the Limitations Section of the AFM's for certain airplanes must be revised to prohibit positioning the power levers below the flight idle stop while the airplane is in flight, and to provide a statement of the consequences of positioning the power levers below the flight idle stop. The FAA has determined that the affected airplanes include those that are equipped with turboprop engines and that are not certificated for in-flight operation with the power levers below the flight idle stop. Since turbo-propeller powered General Dynamics (Convair) Model 240, 340, and 440 series airplanes meet these criteria, the FAA finds that the AFM for these airplanes must be revised to include the limitation and statement of consequences described previously.

Explanation of the Requirements of the Proposed AD

Since an unsafe condition has been identified that is likely to exist or develop in other turbo-propeller powered General Dynamics (Convair) Model 240, 340, and 440 series airplanes of the same type design, the proposed AD would require revising the Limitations Section of the AFM to modify the limitation that prohibits the positioning of the power levers below the flight idle stop while the airplane is in flight, and to add a statement of the consequences of positioning the power levers below the flight idle stop while the airplane is in flight.

Interim Action

This is considered interim action until final action is identified, at which time the FAA may consider further rulemaking.

Cost Impact

The FAA estimates that 178 General Dynamics (Convair) Model 240, 340, and 440 series airplanes of U.S. registry would be affected by this proposed AD, that it would take approximately 1 work hour per airplane to accomplish the proposed actions, and that the average labor rate is $60 per work hour. Based on these figures, the cost impact of the proposed AD on U.S. operators is estimated to be $10,680, or $60 per airplane.

The cost impact figure discussed above is based on assumptions that no operator has yet accomplished any of the proposed requirements of this AD action, and that no operator would accomplish those actions in the future if this AD were not adopted.

Regulatory Impact

The regulations proposed herein would not have substantial direct effects on the States, on the relationship between the national government and the States, or on the distribution of power and responsibilities among the various levels of government. Therefore, in accordance with Executive Order 12612, it is determined that this proposal would not have sufficient federalism implications to warrant the preparation of a Federalism Assessment.

For the reasons discussed above, I certify that this proposed regulation (1) is not a ''significant regulatory action'' under Executive Order 12866; (2) is not a ''significant rule'' under the DOT Regulatory Policies and Procedures (44 FR 11034, February 26, 1979); and (3) if promulgated, will not have a significant economic impact, positive or negative, on a substantial number of small entities under the criteria of the Regulatory Flexibility Act. A copy of the draft regulatory evaluation prepared for this action is contained in the Rules Docket. A copy of it may be obtained by contacting the Rules Docket at the location provided under the caption **ADDRESSES.**

List of Subjects in 14 CFR Part 39

Air transportation, Aircraft, Aviation safety, Safety.

The Proposed Amendment

Accordingly, pursuant to the authority delegated to me by the Administrator, the Federal Aviation Administration proposes to amend part 39 of the Federal Aviation Regulations (14 CFR part 39) as follows:

PART 39—AIRWORTHINESS DIRECTIVES

1. The authority citation for part 39 continues to read as follows:

Authority: 49 U.S.C. 106(g), 40113, 44701.

§39.13 [Amended]

2. Section 39.13 is amended by adding the following new airworthiness directive:

General Dynamics (Convair): Docket 97-NM–69-AD.

Applicability: All turbo-propeller powered Model 240, 340, and 440 series airplanes, including those models commonly referred to as Model 580, 600, and 640 series airplanes; certificated in any category.

Note 1: This AD applies to each airplane identified in the preceding applicability provision, regardless of whether it has been modified, altered, or repaired in the area subject to the requirements of this AD. For airplanes that have been modified, altered, or repaired so that the performance of the requirements of this AD is affected, the owner/operator must request approval for an alternative method of compliance in accordance with paragraph (b) of this AD. The request should include an assessment of the effect of the modification, alteration, or repair on the unsafe condition addressed by this AD; and, if the unsafe condition has not been eliminated, the request should include specific proposed actions to address it.

Compliance: Required as indicated, unless accomplished previously.

To prevent loss of airplane controllability, or engine overspeed and consequent loss of engine power caused by the power levers being positioned below the flight idle stop while the airplane is in flight, accomplish the following:

(a) Within 30 days after the effective date of this AD, revise the Limitations Section of the FAA-approved Airplane Flight Manual (AFM) to include the following statements. This action may be accomplished by inserting a copy of this AD into the AFM.

''Positioning of power levers below the flight idle stop while the airplane is in flight is prohibited. Such positioning may lead to loss of airplane control or may result in an overspeed condition and consequent loss of engine power.''

(b) An alternative method of compliance or adjustment of the compliance time that provides an acceptable level of safety may be used if approved by the Manager, Los Angeles Aircraft Certification Office (ACO), FAA, Transport Airplane Directorate. Operators shall submit their requests through an appropriate FAA Principal Operations

Inspector, who may add comments and then send it to the Manager, Los Angeles ACO.

Note 2: Information concerning the existence of approved alternative methods of compliance with this AD, if any, may be obtained from the Los Angeles ACO.

(c) Special flight permits may be issued in accordance with sections 21.197 and 21.199 of the Federal Aviation Regulations (14 CFR 21.197 and 21.199) to operate the airplane to a location where the requirements of this AD can be accomplished.

Issued in Renton, Washington, on July 2, 1997.

Darrell M. Pederson,

Acting Manager, Transport Airplane Directorate, Aircraft Certification Service.

[FR Doc. 97–17848 Filed 7–8–97; 8:45 am]

BILLING CODE 4910–13–U

DEPARTMENT OF HEALTH AND HUMAN SERVICES

Food and Drug Administration

21 CFR Part 101

[Docket No. 97P–0206]

Food Labeling: Health Claims; Dietary Sugar Alcohols and Dental Caries

AGENCY: Food and Drug Administration, HHS.

ACTION: Proposed rule.

SUMMARY: The Food and Drug Administration (FDA) is proposing to amend the regulation that authorized a health claim on sugar alcohols and dental caries to include the sugar alcohol erythritol. FDA is proposing this action in response to a petition filed by the Cerestar Holding B.V., Mitsubishi Chemical Corp., and Nikken Chemicals Co. The agency has tentatively concluded that, based on the totality of publicly available scientific evidence presented in the petition, erythritol does not promote dental caries. Therefore, FDA is proposing to amend the sugar alcohol and dental caries health claim to include erythritol.

DATES: Written comments by September 22, 1997. The agency is proposing that any final rule that may issue based upon this proposal become effective upon its publication in the **Federal Register**.

ADDRESSES: Written comments to the Dockets Management Branch (HFA–305), Food and Drug Administration, 12420 Parklawn Dr., rm. 1–23, Rockville, MD 20857.

FOR FURTHER INFORMATION CONTACT: Joyce J. Saltsman, Center for Food Safety and Applied Nutrition (HFS–165), Food and Drug Administration, 200 C St. SW., Washington, DC 20204, 202–205–5483.

SUPPLEMENTARY INFORMATION:

I. Background

In the **Federal Register** of August 23, 1996 (61 FR 43433), the agency adopted a final rule to authorize the use, on food labels and in food labeling, of health claims on the association between sugar alcohols and dental caries (hereinafter referred to as the sugar alcohol final rule) (§ 101.80 (21 CFR 101.80)). FDA adopted this regulation in response to a petition filed under section 403(r)(3)(B)(i) of the Federal Food, Drug, and Cosmetic Act (the act) (21 U.S.C. 343(r)(3)(B)(i)). Section 403(r)(3)(B)(i) of the act states that the Secretary of Health and Human Services (and, by delegation, FDA) shall issue regulations authorizing health claims only if he or she determines, based on the totality of publicly available scientific evidence (including evidence from well-designed studies conducted in a manner which is consistent with generally recognized scientific procedures and principles), that there is significant scientific agreement, among experts qualified by scientific training and experience to evaluate such claims, that the claim is supported by such evidence (see also § 101.14(c) (21 CFR 101.14(c))).

The sugar alcohol final rule sets out the circumstances in which a sugar alcohol is eligible to be the subject of a health claim (§ 101.80(c)(2)(ii)). Section 101.80(c)(2)(ii)(A) states that the food must meet the requirement for a sugar free food defined in 21 CFR 101.60(c)(1)(i). Section 101.80(c)(2)(ii)(B) lists the sugar alcohols that are eligible to bear the claim, xylitol, sorbitol, mannitol, maltitol, isomalt, lactitol, hydrogenated starch hydrolysates, hydrogenated glucose syrups, or a combination of these. Section 101.80(c)(2)(ii)(C) states that:

> [W]hen fermentable carbohydrates are present in the sugar alcohol-containing food, the food shall not lower plaque pH below 5.7 by bacterial fermentation either during consumption, or up to 30 minutes after consumption as measured by the indwelling plaque pH test found in ''Identification of Low Caries Risk Dietary Components,'' * * * which is incorporated by reference * * *.

In the sugar alcohol final rule, the agency stated that for other sugar alcohols to be included in § 101.80(c)(2)(ii)(B), a petitioner must show how the substance conforms to the requirements of §§ 101.14(b) and 101.80 (61 FR 43433 at 43442). FDA stated:

> For those substances that are to be consumed at other than decreased dietary levels, the petitioner must demonstrate to FDA's satisfaction that the substance is safe and lawful under the applicable food safety provisions of the act (§ 101.14(b)(3)(ii)). Likewise, the petitioner would need to provide evidence that the sugar alcohol will not lower plaque pH below 5.7. Therefore, before a claim can be made for a new sugar alcohol, it must be shown to meet the requirements for § 101.80. When this is demonstrated, FDA will take action to add the substance to the list in this regulation, which has been renumbered as § 101.80(c)(2)(ii)(B).

The present rulemaking is in response to a petition to amend § 101.80(c)(2)(ii)(B) to include erythritol as one of the sugar alcohols that is eligible to bear the sugar alcohol and dental caries health claim.

II. Petition for Health Claim on Erythritol and the Nonpromotion of Dental Caries

A. The Petition

On April 4, 1997, the petitioners submitted a petition to FDA requesting that the agency amend § 101.80(c)(2)(ii)(B) to authorize a claim to authorize a noncariogenicity dental health claim for the sugar alcohol erythritol. On May 16, 1997, the agency sent the petitioner a letter stating that it had completed its initial review of the petition, and that the petition would be filed in accordance with section 403(r)(4) of the act (see Docket 97P–0206, Letter 1). The following is a review of the health claim petition and of whether erythritol satisfies the requirements of §§ 101.80(c)(2)(ii) and 101.14(b) and (c) of FDA's regulations.

B. Preliminary Requirements

1. The Substance That Is the Subject of the Petition

Erythritol is a 4-carbon, monosaccharide polyhydric alcohol. It occurs naturally in a wide variety of plants (e.g., watermelons, melons, grapes, and mushrooms) and animals (e.g., humans, dogs, and cows). Erythritol is also a product of the fermentation by yeasts and molds of sugars (Ref. 1, p. 27).

2. The Substance Is Associated With a Disease for Which the U.S. Population Is at Risk

In the preamble to the proposed sugar alcohol and dental caries rule (60 FR 37507 at 37509, July 20, 1995) and in the regulation authorizing the claim on sugar alcohols and dental caries (§ 101.80(a)(3)), FDA established that dental caries is a disease for which the U.S. population is at risk. The agency stated:

> Dental caries is recognized in *The Surgeon General's Report on Nutrition and Health* * * * as a disease or health-related condition for which the United States population is at risk * * *. The overall prevalence of dental caries imposes a substantial burden on Americans. Of the 13 leading health

problems in the United States, dental diseases rank second in direct costs * * *.

Dental caries continues to affect a large proportion of Americans. Although there has been a decline in the prevalence of dental caries among children in the United States, the disease remains widespread throughout the population * * *.

Based on these facts, FDA concludes that, as required in § 101.14(b)(1), dental caries is a disease for which the U.S. population is at risk.

3. The Substance Is a Food

In the preamble to the sugar alcohols proposed rule (60 FR 37507 at 37509) and in the final regulation itself (§ 101.80(a)(4)), the agency states that sugar alcohols can be used as sweeteners to replace dietary sugars, such as sucrose and corn sweeteners, in foods such as chewing gums and certain confectioneries. Therefore, FDA concludes that erythritol satisfies the preliminary requirement in § 101.14(b)(3)(i).

4. The Substance Is Safe and Lawful

The petitioner has submitted a petition requesting that FDA affirm that the use of erythritol is generally recognized as safe (GRAS) (62 FR 10285, March 6, 1997). The agency notes that this GRAS affirmation petition (GRASP 7G0422) is still under review, and that authorization of a health claim should not be interpreted as affirmation that the proposed uses of erythritol are GRAS. Such a determination can be made only after the agency has completed its review of the GRAS petition. A preliminary review of the GRAS affirmation petition, however, reveals that it contains significant evidence supporting the safety of the use of this substance at the levels necessary to justify a health claim.

In the GRAS affirmation petition, the petitioner relied heavily on published animal subchronic and chronic toxicity studies and reproduction studies (GRASP 7G0422, App. IV: C4, C12, D5, D7, D8, D17, D20, D27, and D30), on human toleration and absorption studies (GRASP 7G0422, App. IV: C9, C19, C27, E2, E6, E8, and E11), and on the conclusions about the safety of erythritol by a panel of independent experts qualified by scientific training and experience to evaluate the safety of foods. The panel of independent scientists based their conclusions on their review of various published and unpublished scientific studies which included animal toxicological studies and clinical studies. In their report entitled, ''Erythritol: A Review of Biological and Toxicological Studies'' (GRASP 7G0422, App. I-1), the panel concluded that:

The large body of published data supports the conclusion that the intake of erythritol would not be expected to cause adverse effects in humans under the conditions of use in food and that other qualified food safety experts would agree that erythritol is generally recognized as safe (GRAS) under the conditions of its intended use in food.

The petitioner also asserted that erythritol occurs endogenously and naturally in the diet, and that it has a history of safe use in foods. The petitioner further argued that the safety of erythritol is supported by its chemical structure, i.e., it is positioned in the homologous series of sugar alcohols, between glycerol and xylitol, a series that also includes other common food ingredients such as sorbitol and mannitol.

Based on the totality of the evidence, the agency is not prepared, at this time, to take issue with the petitioner's view that the use of erythritol is safe and lawful. Therefore, FDA tentatively concludes that the petitioner has provided evidence that satisfies the requirement in § 101.14(b)(3)(ii) that use of erythritol at the levels necessary to justify a claim is safe and lawful.

III. Review of Scientific Evidence

The petitioner submitted two scientific studies evaluating the relationship between erythritol and dental caries: A human study and an animal study that included an in vitro evaluation.

The human study included an interdental plaque pH telemetry test, one of the methods described in the text entitled ''Identification of Low Caries Risk Dietary Components,'' which the agency incorporated by reference in the sugar alcohol regulation (see § 101.80(c)(2)(ii)(C)). The test was conducted at the Bioelectronic Unit of the Clinic of Preventive Dentistry, Periodontology, and Cariology of the University Dental Institute of Zurich, Switzerland (Ref. 1, Appendix B-2).

For this test, each subject had a mandibular telemetric prosthesis incorporating a miniaturized glass pH-electrode placed directly opposite the interproximal area of an adjacent abutment tooth. Once the prosthesis was inserted into the subject's mouth, the subject was asked not to alter his or her eating habits. The prostheses were worn throughout the 3-to 4-day test period to allow an undisturbed growth of interdental plaque over the tips of the electrodes. With the exception of water rinses, the subjects were also asked to refrain from all oral hygiene measures.

At the end of the 3-to 4-day plaque buildup period, the interdental plaque pH telemetry test was conducted. Baseline plaque pH was measured over a 15-minute period after the subjects chewed a piece of paraffin for 3 minutes. The subjects then sucked on the sugar-free throat lozenge containing erythritol, followed by plaque pH measurements over a 30-minute period. The same test procedure was then repeated using a 10-percent sucrose rinse as the control substance in place of the erythritol lozenge.

The results of this test showed that after the first paraffin chew, baseline plaque pH measured between 6.9 to 7.0, values that were similar to earlier tests with the same subjects and plaque ages (Ref. 1, Appendix B-2). Following consumption of erythritol, plaque pH measured 6.0 to 6.65. The sucrose rinse caused plaque pH to drop to a range of 4.25 to 4.9, levels that were significantly lower than pH of plaque during the erythritol period and well below the critical pH value of 5.7, the level at which demineralization of enamel occurs. The key finding for this proceeding is that there were no significant differences in plaque pH between the paraffin and erythritol periods.

Kawanabe and coworkers evaluated the cariogenicity of erythritol in vitro and in pathogen-free rats (Ref. 1, Appendix B-3). The authors used microorganisms of various *Streptococcus*, *Lactobacillus*, and *Actinomyces* species to determine whether the organisms could use erythritol as a substrate for lactic acid production and plaque formation. The results of this study showed that erythritol was not utilized as a substrate for lactic acid production or for plaque formation by Streptococcus mutans or certain other oral microorganisms.

In the animal study, the rats were randomly divided into six groups. Three groups of animals were fed modified diets for 5 days. These diets contained either starch alone, with no sugars or sugar alcohol; starch plus sucrose; or starch plus erythritol. Then the animals were infected with *Streptococcus sobrinus*, after which they continued to consume the modified diet for an additional 50 days. In a similar experiment, the other three groups of animals were fed diets that contained starch chocolate; sucrose chocolate, or erythritol chocolate, and the animals were infected with *Streptococcus mutans*. Mandibular caries scores were determined at 70 days of age in all groups.

The results of this study showed that the group fed starch plus erythritol experienced significantly fewer caries compared to the starch and starch plus sucrose groups. The total caries scores for groups fed diets of starch, starch

plus sucrose, and starch plus erythritol were 12.5, 60.5, and 3.1, respectively. Similarly, the group consuming erythritol chocolate experienced significantly fewer caries compared to the starch chocolate and sucrose chocolate groups. The caries scores for the starch chocolate, sucrose chocolate, and erythritol chocolate groups were 18.5, 82.8, and 6.7, respectively. There were no significant differences in the body weights of the rats between groups.

The authors stated that, although the group fed starch usually experienced the least dental caries, the caries score for the group fed starch was significantly higher than that of the group fed starch plus erythritol. The same trend was reported in the animals consuming the chocolate diets. The authors suggested that the cariogenicity of starch in these experiments may be explained by the contamination of mono- and disaccharides. The main conclusion from this study is that erythritol did not induce dental caries.

IV. Decision to Propose a Health Claim Relating Erythritol to the Nonpromotion of Dental Caries

The petition set out the results of an indwelling plaque pH test and the results of an in vitro and animal study that evaluated the cariogenicity of erythritol. FDA reviewed this information and has tentatively concluded that there is significant scientific evidence to demonstrate that erythritol does not promote dental caries. The results of the plaque pH test clearly demonstrate that erythritol does not lower plaque pH below 5.7, and that, therefore, it does not promote the demineralization of dental enamel. The results of the in vitro and animal study are consistent with the results of the indwelling plaque pH study and show that erythritol does not support the growth of oral microorganisms responsible for producing the acid in plaque and has little to no cariogenic potential. The results of these studies are consistent with the results of the studies that investigated the cariogenic potential of the sugar alcohols listed in § 101.80(c)(2)(ii)(B). Therefore, FDA tentatively finds that erythritol has satisfied the requirements set forth in §§ 101.14(d) and 101.80, and the agency is proposing to add erythritol to the list of eligible sugar alcohols.

V. Description of Modifications to § 101.80

Section 101.80(c)(2)(ii)(B) lists the sugar alcohols that are eligible to be the subject of a dental claim. FDA is proposing to amend § 101.80(c)(2)(ii)(B) to state ''[T]he sugar alcohol in the food shall be xylitol, sorbitol, mannitol, maltitol, isomalt, lactitol, hydrogenated starch hydrolysates, hydrogenated glucose syrups, erythritol, or a combination of these.''

The agency is not specifying a level of erythritol in the food product because, like the other sugar alcohols, erythritol is being used as a substitute for sugars. Therefore, the amount of the substance required is that needed to achieve a desired level of sweetness.

VI. Environmental Impact

The agency has determined under 21 CFR 25.24(a)(11) that this action is of a type that does not individually or cumulatively have a significant effect on the human environment. Therefore, neither an environmental assessment nor an environmental impact statement is required. This finding is based on information submitted by the petitioner in an environmental assessment prepared using the format described in 21 CFR 25.31a(b)(5).

VII. Analysis of Impacts

FDA has examined the economic implications of the proposed rule as required by Executive Order 12866 and the Regulatory Flexibility Act (5 U.S.C. 601–612). Executive Order 12866 directs agencies to assess all costs and benefits of available regulatory alternatives and, when regulation is necessary, to select the regulatory approach that maximizes net benefits (including potential economic, environmental, public health and safety effects; distributive impacts; and equity). Executive Order 12866 classifies a rule as significant if it meets any one of a number of specified conditions, including having an annual effect on the economy of $100 million or adversely affecting in a material way a sector of the economy, competition, or jobs, or if it raises novel legal or policy issues. If a rule has a significant economic impact on a substantial number of small entities, the Regulatory Flexibility Act requires agencies to analyze regulatory options that would minimize the economic impact of that rule on small entities. FDA finds that this proposed rule is not a significant rule as defined by Executive Order 12866 and finds under the Regulatory Flexibility Act that the proposed rule will not have a significant impact on a substantial number of small entities.

The establishment of this health claim results in benefits and in costs only to the extent that food manufacturers elect to take advantage of the opportunity to use the claim. This rule will not require that any labels be redesigned, or that any product be reformulated.

Some manufacturers are using FDA's approved health claim regarding the benefits of sugar alcohols. This proposed health claim will allow them to highlight the effects of another sugar alcohol, erythritol. The benefit of establishing this health claim is to provide for new information in the market regarding the relationship of erythritol and dental caries, and to provide consumers with the assurance that this information is truthful, not misleading, and scientifically valid.

Costs will be incurred by small entities only if they opt to take advantage of the marketing opportunity presented by this regulation. FDA cannot predict the number of small entities that will choose to use the claim. However, no firm, including small entities, will choose to bear the cost of redesigning labels unless they believe that the claim will result in increased sales of their product. Therefore, this rule will not result in either a decrease in revenues or a significant increase in costs to any small entity. Accordingly, under the Regulatory Flexibility Act, 5 U.S.C. 605(b), the agency certifies that this proposed rule will not have a significant economic impact on a substantial number of small entities.

VIII. Paperwork Reduction Act

FDA tentatively concludes that this proposed rule contains no reporting, recordkeeping, labeling, or other third party disclosure requirement. Thus, there is no ''information collection'' necessitating clearance by the Office of Management and Budget. However, to ensure the accuracy of this tentative conclusion, FDA is seeking comment on whether this proposed rule to permit health claims on the association between erythritol and the noncariogenicity of dental caries imposes any paperwork burden.

IX. Effective Date

FDA is proposing to make these regulations effective upon publication of a final rule based on this proposal.

X. Comments

Interested persons may, on or before September 22, 1997, submit to the Dockets Management Branch (address above) written comments regarding this proposal. Two copies of any comments are to be submitted, except that individuals may submit one copy. Comments are to be identified with the docket number found in brackets in the heading of this document. Received comments may be seen in the office above between 9 a.m. and 4 p.m., Monday through Friday.

XI. Reference

The following reference has been placed on display in the Dockets Management Branch (address above) and may be seen by interested persons between 9 a.m. and 4 p.m., Monday through Friday.

1. Cerestar Holding B. V., Mitsubishi Chemical Corp., and Nikken Chemicals Co., ''Petition to amend the regulation for 21 CFR § 101.80 to authorize a noncariogenicity dental health claim for the sugar alcohol erythritol (1,2,3,4-butanetetrol),'' April 4, 1997 [CP1].

List of Subjects in 21 CFR Part 101

Food and Drug Administration, Food labeling, Nutrition, Reporting and recordkeeping requirements.

Therefore, under the Federal Food, Drug, and Cosmetic Act and under authority delegated to the Commissioner of Food and Drugs, it is proposed that 21 CFR part 101 be amended as follows:

PART 101—FOOD LABELING

1. The authority citation for 21 CFR part 101 continues to read as follows:

Authority: Secs. 4, 5, 6 of the Fair Packaging and Labeling Act (15 U.S.C. 1453, 1454, 1455); secs. 201, 301, 402, 403, 409, 701 of the Federal Food, Drug, and Cosmetic Act (21 U.S.C. 321, 331, 342, 343, 348, 371).

2. Section 101.80 is amended by revising paragraph (c)(2)(ii)(B) to read as follows:

§ 101.80 Health claims: dietary sugar alcohols and dental caries.

* * * * *

(c) * * *

(2) * * *

(ii) * * *

(B) The sugar alcohol in the food shall be xylitol, sorbitol, mannitol, maltitol, isomalt, lactitol, hydrogenated starch hydrolysates, hydrogenated glucose syrups, erythritol, or a combination of these.

* * * * *

Dated: June 17, 1997.

William K. Hubbard,

Associate Commissioner for Policy Coordination.

[FR Doc. 97–17797 Filed 7-8-97; 8:45 am]

BILLING CODE 4160–01–F

FEDERAL COMMUNICATIONS COMMISSION

47 CFR CHAPTER I

[WT Docket No. 97–150; FCC 97–232]

Competitive Bidding

AGENCY: Federal Communications Commission.

ACTION: Request for comments.

SUMMARY: On July 2, 1997, the Federal Communications Commission released a public notice requesting comment on the Commission's use of competitive bidding to award licenses to provide wireless services as part of its preparation of a report to Congress, as required by Section 309(j)(12) of the Communications Act, 47 U.S.C. 309(j)(2). The public notice solicits comment from the public on a variety of issues relating to the Commission's spectrum auction program to date, and announces that comments are due on or before August 1, 1997.

DATES: Comments are due on or before August 1, 1997.

FOR FURTHER INFORMATION CONTACT: Mark Bollinger or Alice Elder, Wireless Telecommunications Bureau, Federal Communications Commission, (202) 418–0660.

SUPPLEMENTARY INFORMATION: This is a summary of the public notice released on July 2, 1997. The complete public notice is available for inspection and copying during normal business hours in the FCC Reference Center (Room 239), 1919 M Street, N.W., Washington, D.C., 20554, and also may be purchased from the Commission's copy contractor, International Transcription Services, (202) 857–3800, 2100 M Street, N.W., Washington, D.C. 20037. The complete public notice is also available on the Commission's Internet home page (http://www.fcc.gov).

Summary of the Public Notice

Commission Opens Inquiry on Competitive Bidding Process for Report to Congress

Comment Due Date: August 1, 1997

I. Introduction and Background

The Omnibus Budget Reconciliation Act of 1993 (the ''Budget Act'') added Section 309(j) to the Communications Act of 1934, as amended, 47 U.S.C. §§ 151–713 (the ''Communications Act''). Section 309(j) authorized the Commission to employ competitive bidding to choose from among mutually exclusive applications for initial licenses in services where the licensee receives compensation from subscribers. It requires the Commission to promote the development and rapid deployment of new technologies, products and services for the benefit of the public, including those residing in rural areas, without administrative or judicial delays. It further requires the Commission to promote opportunity and competition by avoiding excessive concentration of licenses and by disseminating licenses among a wide variety of applicants, including small businesses, rural telephone companies, and businesses owned by members of minority groups and women.

In the four years since grant of auction authority, the Commission has completed fourteen auctions. These auctions have resulted in the assignment of over 4,300 licenses for spectrum-based services, which include narrowband Personal Communications Service (PCS), broadband PCS, Interactive Video Data Service (IVDS), Multipoint Distribution Service (MDS), 900 MHz Specialized Mobile Radio Service (SMR), unserved cellular areas, Direct Broadcast Satellite (DBS), Digital Audio Radio Service (DARS) and Wireless Communications Service (WCS). Auctions to date have raised a total of $23.1 billion for the U.S. Treasury. Future auctions being planned include those for licenses to provide Local Multipoint Distribution Service, paging, narrowband PCS, and the 800 MHz SMR and 220 MHz services.

Section 309(j)(12) of the Communications Act requires that the Commission conduct a public inquiry regarding the use of competitive bidding to award licenses and submit a report to Congress by September 30, 1997. Pursuant to the statute, the report must:

(1) Contain a statement of the revenues obtained, and a projection of future revenues, from the use of competitive bidding systems;

(2) Describe the competitive bidding methodologies established by the Commission pursuant to Sections 309(j)(3) and (4) of the Communications Act;

(3) Compare the advantages and disadvantages of the competitive bidding methodologies established by the Commission in terms of attaining the objectives described in Sections 309(j)(3) and (4) of the Communications Act;

(4) Evaluate whether and to what extent:

(i) Competitive bidding significantly improved the efficiency and effectiveness of the process for granting radio spectrum licenses;

(ii) Competitive bidding facilitated the introduction of new spectrum-based technologies and the entry of new companies into the telecommunications market;

(iii) Competitive bidding methodologies have secured prompt delivery of service to rural areas and have adequately addressed the needs of rural spectrum users; and

(iv) Small businesses, rural telephone companies, and businesses owned by members of minority groups and women were able to participate successfully in the competitive bidding process; and

(5) Recommend any statutory changes that are needed to improve the competitive bidding process.

To date, the Commission has conducted numerous rule makings implementing its auction authority. As a result, the agency has obtained comments and information from potential and actual bidders, industry groups and licensees concerning its auction process. By this Public Notice, the Commission seeks additional information and comment in order to assist in preparing its report to Congress. The Commission encourages comment from participants in prior auctions, from persons or entities who are planning to participate in upcoming auctions, and from other interested parties, including small businesses, rural telephone companies, and businesses owned by members of minority groups and women. Analysis of the data and results of specific auctions already conducted, as well as information helpful in evaluating future auctions, is desirable. Further information about the Commission's auctions can be found at the Commission's Internet Auctions site, http://www.fcc.gov/wtb/auctions.html. Parties are asked to provide any examples or detailed analyses, studies or statistics concerning the issues to be addressed in our report.

II. Request for Public Comment

A. Projection of Revenues From the Use of Competitive Bidding Systems

To date, the Commission has raised $23 billion for the U.S. Treasury through fourteen spectrum auctions. Revenue to be derived from future auctions will likely be affected by various factors, including the nature and amount of spectrum auctioned, service-specific FCC rules, market conditions, and auction methodology. Determining the value of spectrum in advance of an auction is very difficult. The value of spectrum depends on a number of factors, including its location, technical characteristics, the amount of spectrum, the geographic area covered, the availability of technology suitable for a given band, the amount of spectrum already available for provision of similar services, the number of incumbents presently occupying the spectrum, and whether incumbents, if any, will remain licensed in that spectrum or will be relocated to other spectrum. The Commission has not made estimates of the value of auctionable spectrum in the past. Moreover, the Commission's statutory authority specifically instructs the Commission not to base its spectrum allocation decisions ''solely or predominantly'' on the expectation of revenues that auctions may generate. The Commission's primary mission in conducting auctions is promoting competition by awarding licenses rapidly to those who value them most highly.

The Commission asks commenters to provide it with information that will aid the Commission in estimating projected revenues for its report to Congress. Specifically, the Commission asks:

- How have the Commission's auction rules affected revenues in the first fourteen spectrum auctions? Please be specific.
- How and to what extent has the amount of spectrum being offered for auction, size of the license areas, the timing of the offerings, and the use for which the spectrum is allocated, affected revenues?
- What other factors have affected the revenues derived from the spectrum auctions conducted to date?
- What methodologies should the Commission use to project future revenues? Please provide specific illustrations of how such methodologies might be applied.

B. Comparison of Different Methodologies

The introduction of competitive bidding into the license assignment process promotes competition by awarding licenses quickly to those who value them most highly, reduces wasteful private expenditures on obtaining licenses in the secondary market, and raises revenue that lessens taxpayer burdens. Before the grant of auction authority, the Commission mainly relied upon comparative hearings and lotteries to select a single licensee from a pool of mutually exclusive applicants for a license. Under the comparative hearing process, the licensee was selected from among a group of applicants on the basis of certain criteria; under the lottery process, a licensee was selected at random. The Commission has found that spectrum auctions more effectively assign licenses than either comparative hearings or lotteries in most cases. For example, using comparative hearings and lotteries, it generally took the Commission at least two years or more to award licenses in each of the top cellular markets. Lotteries also had the effect of fueling speculation that resulted in the agency receiving nearly 400,000 applications for cellular licenses, and of allowing license winners to reap large windfall profits by quickly selling their licenses in a private auction to others. Notably, between 1983 and 1993 over 75 percent of all cellular licenses had been transferred at least once. By using auctions, the Commission has reduced the average time from license application to award to less than one year and the public is now receiving the direct financial benefit from the award of licenses.

Additionally, the Commission auction methodology promotes efficient spectrum use in several ways. First, it facilitates efficient spectrum aggregation across geographic areas and spectrum blocks. Second, it generates information about the value of spectrum for alternative uses. Moreover, auctions, unlike comparative hearings, can be conducted at modest cost relative to license value. The total cost of all Commission auctions to date has been approximately $65 million, which represents only about 0.28 percent of the total auction revenue raised to date.

In conducting spectrum auctions, the Commission also has analyzed and experimented with various auction methodologies. The Commission pioneered the use of simultaneous multiple round auctions, the format which we have used for most of our auctions. In contrast to other bidding mechanisms, simultaneous multiple round bidding generates the most information about license values during the course of the auction and provides bidders with the most flexibility to pursue spectrum aggregation strategies. Thus, this methodology effectively awards interdependent licenses to the bidders who value them most highly. Generally, the Commission has found that because of the superior information and flexibility simultaneous multiple round bidding provides, it is likely to yield more revenue than other auction designs. The Commission also has used oral outcry and sequential multiple round electronic auction designs, and is exploring other bidding mechanisms, such as combinatorial bidding, for future auctions. *See* Amendment of Part 1 of the Commission's Rules—Competitive Bidding Proceeding, WT Docket No. 97–82, Order, Memorandum Opinion and Order and Notice of Proposed Rule Making, FCC 97–60, 62 FR 13540 (March 21, 1997) (''Part 1 NPRM''). The Commission asks commenters to consider the different methodologies used to date and offer any views or comparisons of these mechanisms that would be helpful for the Commission's report to Congress. In particular, the Commission asks:

• Are there specific examples of where the simultaneous multiple round auction methodology has facilitated efficient aggregation of complementary licenses?

• What costs have been incurred in the preparation of bids? Have these costs been significantly affected by the duration of the auctions? How do these costs compare to the costs associated with lotteries and comparative hearings?

• How has the use in connection with auctions of electronic application filing, electronic bidding, and the distribution of information via the Internet improved the efficiency and effectiveness of granting spectrum licenses?

• Are there any other auction methodologies or improvements to existing methodologies that might be explored?

C. Evaluation of How Competitive Bidding Has Facilitated the Introduction of New Technologies and the Entry of New Companies Into the Telecommunications Market

The PCS spectrum auctions resulted in the creation of many new wireless telecommunications companies. Counted among these companies are many small entrepreneurial firms. Indeed, 54 percent of the licenses thus far awarded by auctions have gone to small businesses, many of which are new entrants in the telecommunications market. Also, several of the largest telecommunications enterprises in the world, such as Sprint Telecommunications and the Bell Operating Companies, have formed alliances to establish nationwide PCS networks. For subscribers, these new firms represent new choices for increasingly improving wireless service at lower prices. A recent report identifies over 40 markets that now have three wireless competitors and 10 markets with four competitors. There have been some reports that pricing in competitive markets with at least one PCS operator averages 18 percent lower than in markets with no PCS competitors. Competition is also increasing consumers' choice of products by advancing the development of three digital standards. In monetary terms, the most important effect to the economy is that these firms are now investing in infrastructure that will permit them to offer telecommunications services in competition with each other and with other providers such as cable and telephone companies. The wireless investment is expected to be in the area of $50 billion over the next five years—the largest single non-military investment in a new technology in history.

By substantially lessening the length of the license assignment process, auctions have resulted in speeding new technologies and services to the wireless communications marketplace. For example, the Commission recently completed the Digital Audio Radio Service auction, which will bring a new digital radio service to American listeners nationwide. Other services that have been rapidly developed through auctions include narrowband PCS, Direct Broadcast Satellite, Multipoint Distribution Service, and Specialized Mobile Radio. For its report, the Commission asks:

• How do spectrum auctions compare with previous assignment methods in attracting new entities to the communications market? How successful have new entrants been in winning licenses at auction? What effect are new entities having on the availability to the public of competitive communications offerings?

• What are specific examples of new and innovative service offerings or technologies that have been made available to the public rapidly because of auctions?

• Has the auction process or the timing of auctions adversely affected the introduction of new technologies in any way? If so, what changes could we make in our auctions process to better facilitate new technologies?

D. Evaluation of How Competitive Bidding Methodologies Have Secured Prompt Delivery of Service to Rural Areas

For broadband PCS, the Commission adopted measures that would facilitate the delivery of new services to rural and underserved areas. In that proceeding, rural telephone companies were concerned that they effectively would be barred from entering the broadband PCS industry if they were required to bid on an entire Basic Trading Area (BTA) or Major Trading Area (MTA) license to obtain the license which covered their wireline service areas. They believed that partitioning would allow them to serve areas in which they already provide service, encouraging them to take advantage of existing infrastructure in providing PCS services and thereby speeding service to rural areas. In response to their concerns, the Commission adopted measures allowing rural telephone companies to obtain broadband PCS licenses that are geographically partitioned from larger PCS service areas, as well as to obtain disaggregation of a portion of the spectrum assigned to the licensee. In the Partitioning and Disaggregation Order, the Commission extended its PCS partitioning and disaggregation rules to allow entities other than rural telephone companies to obtain partitioned or disaggregated licenses in order to speed service to unserved or underserved areas. Partitioning is the assignment of geographic portions of a spectrum license along geopolitical or other boundaries. Disaggregation is the assignment of discrete portions or ''blocks'' of spectrum licenses to another qualifying entity. *See* Geographic Partitioning and Spectrum Disaggregation by Commercial Mobile Radio Licensees, WT Docket No. 96–148, FCC 96–474, Report and Order and Further Notice of Proposed Rulemaking, 62 FR 696 (January 6, 1997). The benefits of these rules are demonstrated in a partitioning agreement recently approved in which a large licensee partitioned a geographic portion of its MTA to a rural telephone company, thereby increasing the rural telephone company's footprint and giving it access to several key interstate arteries.

The Commission has adopted or proposed partitioning and disaggregation rules for other services, such as narrowband PCS, 220 MHz, paging, and LMDS. To identify other ways its rules have facilitated delivery to underserved areas, the Commission asks commenters to address the following questions:

• How have the Commission's competitive bidding rules facilitated delivery of new and competitive telecommunications services to rural and/or underserved areas?

• What effect have the Commission's rules on geographic service area size and the size of spectrum blocks had on delivery of new technologies and services to rural and/or underserved areas?

• How well have service-specific performance requirements, including build out requirements, ensured the prompt delivery of new and competitive service to rural and/or underserved areas?

• What effect have the Commission's policies on geographic partitioning and spectrum disaggregation had on improving opportunities for delivery of new technologies and services to rural and/or underserved areas?

E. Evaluation of How the Commission's Competitive Bidding Rules Ensure that Small Businesses, Rural Telephone Companies and Businesses Owned by Women and Members of Minority Groups were able to Participate Successfully in the Competitive Bidding Process

In prescribing competitive bidding regulations, Congress directed the Commission to ensure that small businesses, rural telephone companies, and businesses owned by members of minority groups and women are given the opportunity to participate in the provision of spectrum-based services. 47 U.S.C. § 309(j)(4)(D). To promote these objectives, Section 309(j)(4)(A) requires the Commission ''to consider . . . alternative payment schedules and methods of calculation, including lump sums or guaranteed installment payments, with or without royalty payments, or other schedules or methods.'' 47 U.S.C. § 309(j)(4)(A). The Commission has adopted a number of measures, including entrepreneurs' blocks, bidding credits, reduced upfront payments and down payments, and installment payments, to ensure the participation of rural telephone companies and small businesses, including those owned by women and minorities.

Since the 1993 mandate to ensure that designated entities are given the opportunity to participate in the provision of spectrum-based services, Congressional and Supreme Court actions have narrowed our options for fulfilling this mandate. In 1994, Congress repealed Section 1071 of the Communications Act, voiding the Commission's tax certificate program. In 1995, the Supreme Court held in *Adarand Constructors, Inc.* v. *Peña*, 115 S. Ct. 2097, 2113 (1995), that ''all racial classifications . . . must be analyzed by a reviewing court under strict scrutiny.'' The Court ruled that any federal program that makes distinctions on the basis of race must serve a compelling governmental interest and must be narrowly tailored to serve that interest. In 1996, the Supreme Court held in *United States* v. *Virginia*, 116 S. Ct. 2264, 2274–76 (1996), that a state program that makes distinctions on the basis of gender must be supported by an ''exceeding persuasive justification'' in order to withstand constitutional scrutiny. Because the record developed in promulgating rules to promote Section 309(j)'s objectives did not assume application of a ''strict scrutiny test,'' the Commission narrowed the provisions for minority- and women-owned businesses to provisions benefiting small businesses. *Id*. The Commission believes that these measures have allowed small businesses, including those owned by women and minorities, to overcome barriers that have impeded these groups' participation in the telecommunications arena, including barriers related to access to capital. The Commission continues to encourage the participation of a variety of entrepreneurs in the provision of wireless services, believing that innovation by small businesses will result in a diversity of service offerings that will increase customer choice and promote competition. Additionally, the Commission has initiated a proceeding to consider other ways to improve the access of small businesses, minority- and women-owned firms to the telecommunications markets. *See* Section 257 Proceeding to Identify and Eliminate Market Entry Barriers for Small Businesses, Report, GN Docket No. 96–113, FCC 97–164, 62 FR 34648 (June 27, 1997). The Commission recently issued a report pursuant to this proceeding which discusses the numerous measures the Commission has implemented to benefit small businesses, such as the use of service-specific definitions of small businesses, the outreach efforts by the FCC Office of Public Affairs and Office of Communications Business Opportunities, and the establishment of the Telecommunications Development Fund (TDF). The Commission also is commencing a comprehensive study to further examine the role of small businesses and businesses owned by minorities or women in the telecommunications industry and the impact of our policies on access to the industry for such businesses. This study will assist the Commission in determining whether there are constitutionally-sound bases for adopting licensing provisions to promote opportunities for women and minorities.

The Commission's experience in conducting auctions has demonstrated that small businesses, as well as minority- and women-owned businesses, have benefited from its competitive bidding procedures. Of the over 4,300 licenses awarded thus far by auctions, 54 percent were awarded to small businesses; 11 percent to minority-owned businesses; 11 percent to women-owned businesses; 10 percent to women-owned small businesses; 4 percent to minority women-owned businesses; and 5 percent to rural telephone companies. (Note that a licensee may fall into more than one category.)

The Commission requests that commenters assess the provisions the Commission has adopted to meet its statutory directive. Specifically, the Commission asks:

- How have the Commission's ownership policies (*e.g.*, attribution rules and spectrum caps), eligibility restrictions (*e.g.*, entrepreneurs' blocks) and favorable payment terms (*e.g.*, bidding credits, reduced upfront and down payments, and installment payment plans) affected the ability of small businesses, rural telephone companies and businesses owned by women and members of minority groups (''designated entities'') to participate successfully in the competitive bidding process? In particular, have these provisions provided significant opportunities for rural telephone companies?
- What specific financial incentives have been beneficial to small businesses? Should these provisions be altered in any manner? What, if any, policies could the Commission adopt to guard against defaults by bidders and licensees? Are installment payment plans essential to attracting new entrants to participate in the auctions? Do the problems presented by the administration of such plans and by the potential for licensee default detract from the efficient award of licenses?
- What should be the Commission's role in the management of the Commission's installment loan portfolio? Should post-licensing issues relating to the satisfaction of installment obligations be transferred to another government agency with the appropriate expertise?
- Have designated entity provisions and other rules (*e.g.*, spectrum caps) served the statutory objective of wide dissemination of licenses?
- Following the Supreme Court's decision in *Adarand*, the Commission revised its auction rules to make them race- and gender-neutral. What has been the impact of this on the opportunities of businesses owned by women and minorities to participate in the provision of spectrum-based services?

III. Recommendation of any Policy and Statutory Changes

The Commission also invites commenters to recommend specific actions the Commission should take to improve the competitive bidding rules and procedures in order to fulfill the objectives of Section 309(j). The Commission notes that it is currently considering proposals to revise and improve the general competitive bidding rules and procedures contained in subpart Q of part 1 of the

Commission's Rules. See part 1 NPRM. Commenters are further requested to offer recommendations on any statutory or procedural changes that would improve the licensing processes following an auction.

IV. Procedural Matters

Comments must be submitted by August 1, 1997. All comments should be filed with the Acting Secretary, Federal Communications Commission, 1919 M Street, N.W., Washington, D.C. 20554. Copies must be provided to Kathleen O'Brien Ham, Chief, Auctions Division, Wireless Telecommunications Bureau, Federal Communications Commission, 2025 M Street, N.W., Room 5322, Washington, D.C. 20554. Comments should reference Docket No. WT 97–150.

Copies of the comments may be obtained from the Commission's duplicating contractor: International Transcription Service, Inc., 2100 M Street, N.W., Suite 140, Washington, D.C. 20037, (202) 857–3500. Copies will also be available for public inspection during regular business hours in the FCC Reference Center, Room 239, 1919 M Street, N.W., Washington, D.C.

For further information, please contact Mark Bollinger or Alice Elder, Auctions Division, Wireless Telecommunications Bureau, Federal Communications Commission at (202) 418–0660.

Federal Communications Commission.

William F. Caton,

Acting Secretary.

[FR Doc. 97–17869 Filed 7–8–97; 8:45 am]

BILLING CODE 6712–01–P

FEDERAL COMMUNICATIONS COMMISSION

47 CFR Part 73

[MM Docket No. 97–147, RM–9099]

Radio Broadcasting Services; Sardis, MS

AGENCY: Federal Communications Commission.

ACTION: Proposed rule.

SUMMARY: The Commission requests comments on a petition filed by Delta Radio, Inc. requesting the allotment of Channel 271A at Sardis, Mississippi, as the community's first local aural transmission service. Channel 271A can be allotted to Sardis in compliance with the Commission's minimum distance separation requirements with a site restriction of 7.0 kilometers (4.4 miles) southeast. The coordinates for Channel 271A at Sardis are 34–24–09 NL and 89–51–23 WL.

DATES: Comments must be filed on or before August 18, 1997, and reply comments on or before September 2, 1997.

ADDRESSES: Federal Communications Commission, Washington, DC 20554. In addition to filing comments with the FCC, interested parties should serve the petitioner, or its counsel or consultant, as follows: Larry G. Fuss, President, Delta Radio, Inc., P.O. Box 1438, Cleveland, Mississippi 38732 (petitioner).

FOR FURTHER INFORMATION CONTACT: Pam Blumenthal, Mass Media Bureau, (202) 418–2180.

SUPPLEMENTARY INFORMATION: This is a synopsis of the Commission's Notice of Proposed Rule Making, MM Docket No. 97–147, adopted June 18, 1997, and released June 27, 1997. The full text of this Commission decision is available for inspection and copying during normal business hours in the FCC's Reference Center (Room 239), 1919 M Street, NW, Washington, DC. The complete text of this decision may also be purchased from the Commission's copy contractor, ITS, Inc., (202) 857–3800, 2100 M Street, NW, Suite 140, Washington, DC 20037.

Provisions of the Regulatory Flexibility Act of 1980 do not apply to this proceeding.

Members of the public should note that from the time a Notice of Proposed Rule Making is issued until the matter is no longer subject to Commission consideration or court review, all ex parte contacts are prohibited in Commission proceedings, such as this one, which involve channel allotments. See 47 CFR 1.1204(b) for rules governing permissible ex parte contacts.

For information regarding proper filing procedures for comments, see 47 CFR 1.415 and 1.420.

List of Subjects in 47 CFR Part 73

Radio broadcasting.

Federal Communications Commission.

John A. Karousos,

Chief, Allocations Branch, Policy and Rules Division, Mass Media Bureau.

[FR Doc. 97–17878 Filed 7–8–97; 8:45 am]

BILLING CODE 6712–01–P

FEDERAL COMMUNICATIONS COMMISSION

47 CFR Part 73

[MM Docket No. 97–148, RM–9088]

Radio Broadcasting Services; New London, IA

AGENCY: Federal Communications Commission.

ACTION: Proposed rule.

SUMMARY: The Commission requests comments on a petition filed by Sound In Spirit Broadcasting, Inc., requesting the allotment of Channel 247A at New London, Iowa, as the community's first local aural transmission service. Channel 247A can be allotted to New London in compliance with the Commission's minimum distance separation requirements with a site restriction of 2.7 kilometers (1.7 miles) west in order to avoid a short-spacing conflict with the licensed operation of Station WFYR, Channel 247B1, Elmwood, Illinois. The coordinates for Channel 247A at Elmwood are 40–55–30 NL and 91–25–40 WL.

DATES: Comments must be filed on or before August 18, 1997, and reply comments on or before September 2, 1997.

ADDRESSES: Federal Communications Commission, Washington, DC 20554. In addition to filing comments with the FCC, interested parties should serve the petitioner, or its counsel or consultant, as follows: Bob Palmeter, President, Sound in Spirit Broadcasting, Inc., 515 North B Street, Oskaloosa, Iowa 52577 (petitioner).

FOR FURTHER INFORMATION CONTACT: Pam Blumenthal, Mass Media Bureau, (202) 418–2180.

SUPPLEMENTARY INFORMATION: This is a synopsis of the Commission's Notice of Proposed Rule Making, MM Docket No. 97–148, adopted June 18, 1997, and released June 27, 1997. The full text of this Commission decision is available for inspection and copying during normal business hours in the FCC's Reference Center (Room 239), 1919 M Street, NW, Washington, DC. The complete text of this decision may also be purchased from the Commission's copy contractor, ITS, Inc., (202) 857–3800, 2100 M Street, NW, Suite 140, Washington, DC 20037.

Provisions of the Regulatory Flexibility Act of 1980 do not apply to this proceeding.

Members of the public should note that from the time a Notice of Proposed Rule Making is issued until the matter is no longer subject to Commission

consideration or court review, all *ex parte* contacts are prohibited in Commission proceedings, such as this one, which involve channel allotments. See 47 CFR 1.1204(b) for rules governing permissible *ex parte* contacts.

For information regarding proper filing procedures for comments, see 47 CFR 1.415 and 1.420.

List of Subjects in 47 CFR Part 73

Radio broadcasting.

Federal Communications Commission.

John A. Karousos,

Chief, Allocations Branch, Policy and Rules Division, Mass Media Bureau.

[FR Doc. 97–17884 Filed 7–8–97; 8:45 am]

BILLING CODE 6712–01–P

Notices

Federal Register
Vol. 62, No. 131
Wednesday, July 9, 1997

This section of the FEDERAL REGISTER contains documents other than rules or proposed rules that are applicable to the public. Notices of hearings and investigations, committee meetings, agency decisions and rulings, delegations of authority, filing of petitions and applications and agency statements of organization and functions are examples of documents appearing in this section.

DEPARTMENT OF AGRICULTURE

Agricultural Research Service

Notice of Intent To Grant Exclusive License

AGENCY: Agricultural Research Service, USDA.

ACTION: Notice of intent.

SUMMARY: Notice is hereby given that the U.S. Department of Agriculture, Agricultural Research Service, intends to grant to Kemin Industries, Inc., of Des Moines, Iowa, an exclusive license to U.S. Patent 5,560,920, issued October 1, 1996, ''Calcium Formulations for Prevention of Parturient Hypocalcemia.'' Notice of Availability was published in the **Federal Register** on December 14, 1995.

DATES: Comments must be received by September 8, 1997.

ADDRESSES: Send comments to: USDA, ARS, Office of Technology Transfer, Room 415, Building 005, BARC-West, Beltsville, Maryland 20705–2350.

FOR FURTHER INFORMATION CONTACT: June Blalock of the Office of Technology Transfer at the Beltsville address given above; telephone: 301–504–5989.

SUPPLEMENTARY INFORMATION: The Federal Government's patent rights to this invention are assigned to the United States of America, as represented by the Secretary of Agriculture. It is in the public interest to so license this invention as Kemin Industries, Inc., has submitted a complete and sufficient application for a license. The prospective license will be royalty-bearing and will comply with the terms and conditions of 35 U.S.C. 209 and 37 CFR 404.7. The prospective license may be granted unless, within sixty days from the date of this published Notice, the Agricultural Research Service receives written evidence and argument which establishes that the grant of the license would not be consistent with the requirements of 35 U.S.C. 209 and 37 CFR 404.7.

Richard M. Parry, Jr.,
Assistant Administrator.

[FR Doc. 97–17864 Filed 7–8–97; 8:45 am]

BILLING CODE 3410–03–P

DEPARTMENT OF AGRICULTURE

Forest Service

Extension of Currently Approved Information Collection for Youth Conservation Corps Employment

AGENCY: Forest Service, USDA.

ACTION: Notice of intent; request for comments.

SUMMARY: In accordance with the Paperwork Reduction Act of 1995, the Forest Service announces its intent to request an extension of a currently approved information collection. Under the Youth Conservation Corps Act of August 13, 1970, as amended (U.S.C. 1701–1706), the Forest Service provides seasonal employment for eligible youth 15 to 18 years old. As part of this effort, the Forest Service collects information from applicants to evaluate their eligibility for employment with the agency through the Program.

DATES: Comments must be received in writing on or before September 8, 1997.

ADDRESSES: All comments should be addressed to: Director, Youth Conservation Corps, Senior, Youth, and Volunteer Programs (MAIL STOP 1136), Forest Service, USDA, P.O. Box 96090, Washington, D.C. 20090–6090.

FOR FURTHER INFORMATION CONTACT: Ransom Hughes, Youth Conservation Corps, Senior, Youth, and Volunteer Programs, at (703) 235–8861.

SUPPLEMENTARY INFORMATION:

Background

Under the Youth Conservation Corps Act of August 13, 1970, as amended (U.S.C. 1701–1706), the Forest Service, U.S. Department of Agriculture, and the Fish and Wildlife Service and National Park Service, U.S. Department of the Interior, cooperate to provide seasonal employment for eligible youth 15 to 18 years old.

Youth seeking training and employment with the Forest Service through this program must, annually, complete forms FS–1800–18 Youth Conservation Corps Application and FS–1800–3 Youth Conservation Corps Medical History. Forest Service employees use the information on the forms to evaluate the eligibility of each applicant. The Youth Conservation Corps stresses three important objectives: (1) accomplish needed conservation work on public lands; (2) provide gainful employment for 15 to 18 year old males and females from all social, economic, ethnic, and racial backgrounds; and (3) foster, on the part of the 15 to 18 year old youth, an understanding and appreciation of the Nation's natural resources and heritage.

Data gathered in this information collection is not available from other sources.

Description of Information Collection

The following describes the information collection to be extended:

Title: FS–1800–18 Youth Conservation Corps (YCC) Application.

OMB Number: 0596–0084.

Expiration Date of Approval: October 31, 1997.

Type of Request: Extension of a previously approved information collection.

Abstract: All youth, who would like to be considered for employment with the Forest Service through the Youth Conservation Corps Program, must complete the application form, FS–1800–18 Youth Conservation Corps. Each applicant is asked to answer questions that include their name, social security number, date of birth, mailing address, and telephone number. The form must be signed by their parent or guardian. Forest Service personnel evaluate the information to determine each applicant's eligibility.

Estimate of Burden: 3 minutes.

Type of Respondents: Youth 15 to 18 years of age.

Estimated Number of Respondents: 3000 per year.

Estimated Number of Responses per Respondent: 1.

Estimated Total Annual Burden on Respondents: 150 hours.

Description of Information Collection

The following describes the information collection to be extended:

Title: FS–1800–3 Youth Conservation Corps (YCC) Medical History.

OMB Number: 05596–0084.

Expiration Date of Approval: October 31, 1997.

Type of Request: Extension of a previously approved information collection.

Abstract: Youth seeking seasonal employment with the Forest Service through the Youth Conservation Corps Program must complete form, FS–1800–3 Youth Conservation Corps Medical History. The form must be signed by their parent or guardian. Each applicant is asked to answer questions regarding their personal health. The purpose of the FS–1800–3 form is to certify the youth's physical fitness to work in the Youth Conservation Corps seasonal employment program.

Estimate of Burden: 7 minutes.

Type of Respondents: Youth 15 to 18 years of age.

Estimated Number of Respondents: 3000 per year.

Estimated Number of Responses per Respondent: 1.

Estimated Total Annual Burden on Respondents: 350 hours.

The agency invites comments on the following: (a) Whether the proposed collection of information is necessary for the proper performance of the functions of the agency, including whether the information will have practical utility; (b) the accuracy of the agency's estimate of the burden of the proposed collection of information, including the validity of the methodology and assumptions used; (c) ways to enhance the quality, utility, and clarity of the information to be collected; and (d) ways to minimize the burden of the collection of information on respondents, including the use of automated, electronic, mechanical, or other technological collection techniques or other forms of information technology.

Use of Comments

All comments received in response to this notice will be summarized and included in the request for Office of Management and Budget approval. All comments, including name and address when provided, will become a matter of public record.

Dated: July 30, 1997.

Ronald E. Stewart,

Acting Chief.

[FR Doc. 97–17922 Filed 7–8–97; 8:45 am]

BILLING CODE 3410–11–M

DEPARTMENT OF AGRICULTURE

Forest Service

Rocky Mountain Region Environmental Impact Statement for Sheep Flats Diversity Unit Timber Sales, Grand Mesa, Uncompahgre and Gunnison National Forests, Mesa County, Colorado

AGENCY: Forest Service, USDA.

ACTION: Revision of a notice of intent to prepare an environmental impact statement.

RESPONSIBLE OFFICIAL: The responsible official for this environmental impact statement is Mr. Robert Storch, Forest Supervisor of the Grand Mesa, Uncompahgre, and Gunnison National Forests, 2250 Highway 50, Delta, Colorado 81416.

SUMMARY: The Forest Service will prepare an environmental impact statement about four (4) proposed timber sales: Valley View, Sheep Flats, Grove Creek, and Leon. These sales are located in the Sheep Flats Diversity Unit on the Grant Mesa National Forest, Collbran Ranger District.

DATES: Publication of Draft EIS: July 1997; Final EIS: January, 1988.

ADDRESSES: Send written comments to Pam Bode, Team Leader, USDA Forest Service, 216 North Colorado Street, Gunnison, CO, 81230. Contact Pam Bode also for further information. Phone: 970–641–0471. FAX: 970–641–1928.

SUPPLEMENTARY INFORMATION: The Forest Supervisor will use this Environmental Impact Statement to decide how to manage the timber resource within the Sheep Flats Diversity Unit. The Forest Service is proposing to harvest four timber sales on this National Forest system land. Even-aged and uneven-aged silvicultural systems are being planned in Engelmann spruce, sub-alpine fir, and aspen stands. These sales are scheduled to be offered within a five to ten year period after this analysis.

Initial scoping of interested parties identified three preliminary issues. These are: (1) Constructing roads and harvesting timber within areas that were identified as the Salt Creek Roadless Area and Priest Mountain Roadless Area during the 1979 RARE II process, (2) harvesting old growth timber, and (3) cumulative impacts on ecosystems from logging operations in and around the sale areas.

Five alternatives will be studied in this analysis. Alternative 1 is no action. Alternatives 2 and 4 harvest suited timber but do not enter the Salt Creek Roadless Area. Alternatives 3 and 5 harvest suited timber throughout the Diversity Unit, including within the Salt Creek Roadless Area. Alternatives 2 and 3 emphasize maintenance of current old growth attributes and wildlife habitat networks while moderately improving timber structural diversity. Alternative 4 and 5 emphasize timber structural diversity and production for wood fiber. The proposed action is Alternative 5.

Alternative	Acres planned for harvest		Volume in board feet	Number of sales
	Total acres	RARE II acres		
1	0	0	0	0
2	682	0	2,222,000	1
3	2,615	1798	11,158,000	4
4	889	0	3,172,000	1
5	3,591	2766	15,279,000	4

This notice is a renotification of the Forest Service's intent to study these timber sales within the Sheep Flats Diversity Unit. Previous notices of intent were published in the **Federal Register** Volume 57, #31, on 2/14/92, and volume 61 #177, on 9/11/96. A previous notice of availability of the draft EIS was published in Volume 59, #5, on 1/7/94. This revised notice provides new dates for completions of the revised draft and the final Environmental Impact Statements. The alternatives that are being studied have changed substantially from the previous document.

Since this is a renotification, news releases have already been issued and a public meeting has already taken place in March 1992. Field tours to the proposed area have already been conducted with concerned parties. Additional news releases have been issued explaining the new timeline for

this analysis. Parties that expressed interest previously have been informed individually by mail that this analysis is continuing. No additional public meetings are planned, however, the Forest Service is willing to consider any party's request for additional field tours or public meetings.

The comment period on the draft environmental impact statement will be 45 days from the date the Environmental Protection Agency publishes the notice of availability in the **Federal Register.**

The Forest Service believes, at this early stage, it is important to give reviewers notice of several court rulings related to public participation in the environmental review process. First, reviewers of draft environmental impact statements must structure their participation in the environmental review of the proposal so that is meaningful and alerts an agency to the reviewer's position and contentions. *Vermont Yankee Nuclear Power Corp.* v. *NRDC, 435 U.S. 519, 553 (1978).* Also, environmental objections that could be raised at the draft environmental impact stage but that are not raised until after completion of the final environmental statement may be waived or dismissed by the courts. *City of Angoon* v. *Hodel,* 803 F.2d 1016, 1022 (9th Cir. 1986) and *Wisconsin Heritages, Inc.* v. *Harris,* 490 F. Supp. 1334, 1338 (E.D. Wis. 1980). Because of these court rulings, it is very important that those interested in this proposed action participate by the close of the 45 day comment period so that substantive comments and objections are made available to the Forest Service at a time when it can meaningfully consider them and respond to them in the final environmental impact statement.

To assist the Forest Service in identifying and considering issues and concerns on the proposed action, comments on the draft environmental impact statement should be as specific as possible. It is also helpful if comments refer to specific pages or chapters of the draft statement. Comments may also address the adequacy of the draft environmental impact statement or the merits of the alternatives formulated and discussed in the statement or the merits of the alternatives formulated and discussed in the statement. Reviewers may wish to refer to the Council on Environmental Quality Regulations for implementing the procedural provisions of the National Environmental Policy Act at 40 CFR 1503.3 in addressing these points.

Dated: June 23, 1997.

Robert L. Storch,

Forest Supervisor.

[FR Doc. 97–17927 Filed 7–8–97; 8:45 am]

BILLING CODE 3410–11–M

DEPARTMENT OF AGRICULTURE

Forest Service

Southwest Washington Provincial Advisory Committee Meeting Notice

AGENCY: Forest Service, USDA.

ACTION: Notice of meeting.

SUMMARY: The Southwest Washington Provincial Advisory Committee will meet on Wednesday, July 23, 1997, in Woodland, Washington, at the Oak Tree Restaurant, near Exit No. 21 on Interstate 5. The meeting will begin at 9:30 a.m. and continue until 4:30 p.m. The purpose of the meeting is to: (1) Present draft alternatives on the Cispus Adaptive Management Area, followed by discussion, recommendations and option decision, (2) discussion on Advisory Committee meeting attendance and meeting schedule, (3) Present NWFP Monitoring Program and discussion on Committee participation, and (4) Public Open Forum. All Southwest Washington Provincial Advisory Committee meetings are open to the public. Interested citizens are encouraged to attend. The ''open forum'' provides opportunity for the public to bring issues, concerns, and discussion topics to the Advisory Committee. The ''open forum'' is scheduled as part of agenda item (4) for this meeting. Interested speakers will need to register prior to the open forum period. The committee welcomes the public's written comments on committee business at any time.

FOR FURTHER INFORMATION CONTACT: Direct questions regarding this meeting to Sue Lampe, Public Affairs, at (360) 891–5091, or write Forest Headquarters Office, Gifford Pinchot National Forest, 10600 N.E. 51st Circle, Vancouver, WA 98682.

Dated: July 2, 1997.

Robert L. Yoder,

Engineering/Timber Staff Officer.

[FR Doc. 97–17853 Filed 7–8–97; 8:45 am]

BILLING CODE 3410–11–M

DEPARTMENT OF COMMERCE

Bureau of Export Administration

Regulations and Procedures Technical Advisory Committee; Notice of Partially Closed Meeting

A meeting of the Regulations and Procedures Technical Advisory Committee will be held July 29, 1997, 9:00 a.m., in the Herbert C. Hoover Building, Room 3884, 14th Street between Constitution and Pennsylvania Avenues, N.W., Washington, D.C. The Committee advises the Office of the Assistant Secretary for Export Administration on implementation of the Export Administration Regulations (EAR) and provides for continuing review to update the EAR as needed.

Agenda

Open Session

1. Opening remarks by the Chairman.
2. Presentation of papers or comments by the public.
3. Update on Bureau of Export Administration initiatives.
4. Election of Committee Officers.
5. Discussion on the Automated Export System and extension of the Automated Export Reporting Program.
6. Review of the Foreign Trade Statistics Regulations.
7. Discussion on the ''deemed export'' rule and case processing.
8. Discussion on the ''is informed'' process and additions to the Entities List.
9. Presentation on export control legislation.
10. Update on implementation of The Wassenaar Arrangement.
11. Discussion on information sharing and end-use controls.
12. Presentation on revisions to the Export Administration Regulations.

Closed Session

13. Discussion of matters properly classified under Executive Order 12958, dealing with the U.S. export control program and strategic criteria related thereto.

The General Session of the meeting will be open to the public and a limited number of seats will be available. To the extent that time permits, members of the public may present oral statements to the Committee. Written statements may be submitted at any time before or after the meeting. However, to facilitate the distribution of public presentation materials to the Committee members, the Committee suggests that presenters forward the public presentation materials two weeks prior to the meeting date to the following address:

Ms. Lee Ann Carpenter, TAC Unit/OAS/EA MS: 3886C, Bureau of Export Administration, U.S. Department of Commerce, Washington, D.C. 20230.

The Assistant Secretary for Administration, with the concurrence of the delegate of the General Counsel, formally determined on December 2, 1996, pursuant to Section 10(d) of the Federal Advisory Committee Act, as amended, that the series of meetings or portions of meetings of the Committee and of any Subcommittees thereof, dealing with the classified materials listed in 5 U.S.C. 552b(c)(1) shall be exempt from the provisions relating to public meetings found in section 10 (a)(1) and (a)(3), of the Federal Advisory Committee Act. The remaining series of meetings or portions thereof will be open to the public. A copy of the Notice of Determination to close meetings or portions of meetings of the Committee is available for public inspection and copying in the Central Reference and Records Inspection Facility, Room 6020, U.S. Department of Commerce, Washington, D.C. For further information, call Lee Ann Carpenter at (202) 482–2583.

Dated: July 2, 1997.

Lee Ann Carpenter,

Director, Technical Advisory Committee Unit.

[FR Doc. 97–17865 Filed 7–8–97; 8:45 am]

BILLING CODE 3510–DT–M

DEPARTMENT OF COMMERCE

International Trade Administration

[A–580–809]

Preliminary Results of Antidumping Duty Administrative Review: Circular Welded Non-Alloy Steel Pipe From the Republic of Korea

AGENCY: International Trade Administration, Import Administration, Department of Commerce.

ACTION: Preliminary results of antidumping duty administrative review: circular welded non-alloy steel pipe from the Republic of Korea.

SUMMARY: In response to requests from interested parties, the Department of Commerce (the Department) is conducting an administrative review of the antidumping duty order on circular welded non-alloy steel pipe from the Republic of Korea. The review covers five manufacturers/exporters: Dongbu Steel Co., Ltd. (Dongbu), Korea Iron Steel Company (KISCO), Korea Steel Pipe Co., Ltd. (KSP), Pusan Steel Pipe Co., Ltd. (PSP), and Union Steel Co., Ltd. (Union). The period of review (the POR) is April 28, 1992, through October 31, 1993.

We have preliminarily determined that sales have been made below foreign market value (FMV) by various companies subject to this review. If these preliminary results are adopted in our final results of this administrative review, we will instruct U.S. Customs to assess antidumping duties equal to the difference between the purchase price (PP) or exporter's sales price (ESP) and the FMV.

We invite interested parties to comment on these preliminary results. Parties who submit comments in this proceeding are requested to submit with each argument (1) a statement of the issue and (2) a brief summary of the argument.

EFFECTIVE DATE: July 9, 1997.

FOR FURTHER INFORMATION CONTACT: Michael Panfeld, Mark Ross, Thomas Schauer, or Richard Rimlinger, Import Administration, International Trade Administration, U.S. Department of Commerce, 14th Street and Constitution Avenue, N.W., Washington, D.C. 20230; telephone: (202) 482–4733; facsimile: (202) 482–1290.

SUPPLEMENTARY INFORMATION:

The Applicable Statute

Unless otherwise indicated, all citations to the Tariff Act of 1930, as amended (the Act), are references to the provisions in effect as of December 31, 1994. In addition, unless otherwise indicated, all citations to the Department's regulations are to the current regulations, as codified at 19 CFR part 353 (April 1, 1996).

Background

On November 2, 1992, the Department published in the **Federal Register** (57 FR 49,453) the antidumping duty order on circular welded non-alloy steel pipe from the Republic of Korea. On December 17, 1993, in accordance with 19 CFR 353.22(c), we initiated an administrative review of this order for the period April 28, 1992, through October 31, 1993 (58 FR 65,964). The Department is now conducting this administrative review in accordance with section 751 of the Act.

Scope of Review

The merchandise subject to this review is circular welded non-alloy steel pipes and tubes, of circular cross-section, not more than 406.4mm (16 inches) in outside diameter, regardless of wall thickness, surface finish (black, galvanized, or painted), or end finish (plain end, bevelled end, threaded, or threaded and coupled). These pipes and tubes are generally known as standard pipe, though they may also be called structural or mechanical tubing in certain applications. Standard pipes and tubes are intended for the low pressure conveyance of water, steam, natural gas, air, and other liquids and gases in plumbing and heating systems, air-conditioning units, automatic sprinkler systems, and other related uses. Standard pipe may also be used for light load-bearing and mechanical applications, such as for fence tubing, and for protection of electrical wiring, such as conduit shells.

The scope is not limited to standard pipe and fence tubing or those types of mechanical and structural pipe that are used in standard pipe applications. All carbon steel pipes and tubes within the physical description outlined above are included within the scope of this review, except line pipe, oil-country tubular goods, boiler tubing, cold-drawn or cold-rolled mechanical tubing, pipe and tube hollows for redraws, finished scaffolding, and finished rigid conduit. Standard pipe that is dual or triple certified/stenciled that enters the United States as line pipe of a kind used for oil or gas pipelines is also not included in this review.

Imports of these products are currently classifiable under the following Harmonized Tariff Schedule (HTS) subheadings: 7306.30.1000, 7306.30.5025, 7306.30.5032, 7306.30.5040, 7306.30.5055, 7306.30.5085, and 7306.30.5090. Although the HTS subheadings are provided for convenience and customs purposes, our written description of the scope of this proceeding is dispositive.

Product Comparisons

We calculated transaction-specific U.S. prices (USPs) for comparison to either weighted-average FMVs or constructed values. The USPs and FMVs were calculated and compared by product characteristics. For price-to-price comparisons, we compared identical merchandise, where possible. Where there were no sales of identical merchandise in the home market to compare to U.S. sales, we made similar comparisons based on the characteristics listed in our memorandum to file dated June 24, 1994. If there were no sales of identical or similar merchandise in the home market to compare to U.S. sales, we compared USP to constructed value.

United States Price

For all respondents, we based USP on purchase price, in accordance with section 772(b) of the Act, when the subject merchandise was sold to

unrelated purchasers in the United States prior to importation and because exporter's sale price (ESP) methodology, in those instances, was not otherwise indicated.

In addition, for KSP and PSP, where certain sales to the first unrelated purchaser took place after importation into the United States, we based USP on ESP, in accordance with section 772(c) of the Act.

USP was based on the packed f.o.b., c.i.f., or delivered prices to unrelated purchasers in, or for exportation to, the United States. We made adjustments, as appropriate, to PP and ESP for movement expenses, discounts, rebates, and duty drawback.

We made additional deductions from ESP for direct selling expenses and indirect selling expenses.

For all respondents, we have adjusted for VAT in accordance with the tax-neutral methodology approved by the Court of Appeals for the Federal Circuit in *Federal-Mogul Corp.* v. *United States,* 63 F.3d 1572 (CAFC 1995). The approved tax-neutral adjustment methodology is based on the amounts of foreign taxes, rather than the tax rates. We have thus returned to the *Zenith Electronics Corp.* v. *United States,* 900 F.2d 1573 (CAFC 1993) footnote-4 methodology of adding the absolute amount of the consumption taxes on home market sales to the USP. Consistent with this methodology, when merchandise exported to the United States is exempt from the VAT, we have added to USP the absolute amount of such taxes charged on the comparison sales in the home market.

With respect to subject merchandise to which value was added in the United States prior to sale to unrelated U.S. customers, *e.g.,* pipe that was imported and further processed by U.S. affiliates, we deducted any increased value in accordance with section 772(e)(3) of the Tariff Act.

Foreign Market Value

In order to determine whether there were sufficient sales of standard pipe in the home market to serve as a viable basis for calculating FMV, we compared the volume of home market sales of standard pipe to the volume of third-country sales of the same product in accordance with section 773(a)(1)(B) of the Act. We found that the home market was viable for sales of standard pipe by all respondents.

Home market prices were based on the packed, ex-factory or delivered prices to related or unrelated purchasers in the home market. Where applicable, we made adjustments for movement expenses, differences in cost attributable to differences in physical characteristics of the merchandise, and differences in packing. We also made adjustments for differences in circumstances of sale in accordance with 19 CFR 353.56. For comparisons to PP sales, we deducted home market direct selling expenses and added U.S. direct selling expenses. For comparisons to ESP sales, we deducted home market direct selling expenses. We also made adjustments, where applicable, for home market indirect selling expenses to offset U.S. commissions in PP and ESP calculations and to offset U.S. indirect selling expenses deducted in ESP calculations, but not exceeding the amount of U.S. indirect expenses. For comparisons to both ESP and PP sales, we adjusted for VAT using the methodology detailed in the ''United States Price'' section of this notice.

We used sales to related customers only where we determined such sales were made at arm's length (*i.e.,* at prices comparable to prices at which respondents sold identical merchandise to unrelated customers). *See* 19 CFR 353.45(a). To test whether these sales were made at arm's length, we compared the gross unit prices of sales to affiliated and unaffiliated customers net of all movement charges, direct and indirect selling expenses, and packing. *See* Final Determination of Sales at Less Than Fair Value; Certain Cold-Rolled Carbon Steel Flat Products from Argentina, 58 FR 37062, 37077 (July 9, 1993).

PSP and Dongbu reported sales in the home market of ''overrun'' merchandise (*i.e.,* sales of a greater quantity of pipe than the customer ordered due to overproduction). Respondents claimed that we should disregard ''overrun'' sales in the home market as outside the ordinary course of trade. Section 773(a)(1)(A) of the Act and 19 CFR 353.46(a) provide that FMV shall be based on the price at which such or similar merchandise is sold in the exporting country in the ordinary course of trade for home consumption. Section 771(15) of the Act defines ''ordinary course of trade'' as ''the conditions and practices which, for a reasonable time prior to the exportation of the merchandise which is the subject of an investigation, have been normal in the trade under consideration with respect to merchandise of the same class or kind.'' See also 19 CFR 353.46(b).

We analyzed the following criteria to determine whether ''overrun'' sales differ from other sales of commercial pipe: (1) Ratio of overrun sales to total home market sales; (2) number of overrun customers compared to total number of home market customers; (3) average price of an overrun sale compared to average price of a commercial sale; (4) profitability of overrun sales compared to profitability of commercial sales; and (5) average quantity of an overrun sale compared to the average quantity of a commercial sale. Based on our analysis of these criteria and on an analysis of the terms of sales, we found certain overrun sales to be outside the ordinary course of trade. This analysis is consistent with the analysis sustained by the Court of International Trade in *Laclede Steel Co.* v. *United States,* Slip. Op. 94–144 (1995). For a more detailed description of our analysis, see the preliminary results analysis memoranda which are on file in the Central Records Unit (room B–099 of the Main Commerce Building).

Petitioners have contended that political contributions or other monetary payments (known as *ttuk kap*) are a normal part of doing business in Korea and can account for large sums. Petitioners have urged that the Department determine whether respondents or their affiliates made such payments and how such payments were treated in the companies' accounting systems.

We have completed a limited number of verifications and have found that none of the firms we verified maintained accounts identified specifically for either so-called *ttuk kap* payments or for political contributions. Moreover, based on the accounting and financial records that we examined, we found no evidence of incomplete expense reporting from the firms in question.

Cost of Production

Because we found home market sales below the cost of production by KSP and PSP in the less-than-fair-value (LTFV) investigation, we concluded that reasonable grounds exist to believe or suspect that these companies made home market sales during the POR at prices below the cost of production, and we therefore initiated cost investigations. *See* Import Administration Policy Bulletin Number 94.1 dated March 25, 1994. In addition, based on allegations submitted by petitioners in connection with this administrative review, we have decided to investigate whether sales of subject merchandise made by Dongbu and Union were made at prices below the cost of production. *See* Memorandum to Marie Parker dated April 22, 1994, and Memorandum to Marie Parker dated April 25, 1994.

A. Calculation of COP

We calculated the COP based on the sum of the costs of materials and fabrication employed in producing the subject merchandise, plus amounts for selling, general and administrative expenses and packing costs in accordance with section 773(b) of the Act. We relied on the home market sales and COP information provided by respondents in their questionnaire and supplemental responses.

As in the LTFV investigation of this case, we requested that all sales and cost data be reported on a weight basis. In the LTFV segment of this proceeding, respondents reported various per-unit prices and costs on several bases: actual weight, theoretical weight, and standard actual weight. In this review, we requested that respondents report all costs, prices, and adjustments on a theoretical-weight basis because that is the basis on which U.S. sales were made. We did this in order to ensure that we calculated costs and expenses in a consistent manner. The petitioners have contended that information used by the respondents to derive all three weight bases is inaccurate and systematically understates the cost of production of subject merchandise.

In response to the petitioners' arguments, we requested sale and cost data on a length basis rather than a weight basis for each 1″, 2″, and 4″ diameter pipe. These sizes represent the largest-volume U.S. sales made by the respondents during the POR. Respondents did not report actual length for these items but simply calculated length by applying a factor based on the reported weight, contending that they do not maintain records on an actual-length basis. Petitioners continue to object to respondents' methodology.

For these preliminary results, we have used the weight figures supplied by respondents for our dumping comparisons because we have no evidence that the weight figures respondents supplied result in understated cost figures. Furthermore, through the cost verification we have conducted thus far, we have not found understated costs. *See* Union Steel Co., Ltd., cost verification report dated June 2, 1997. This issue will also be examined at the cost verifications of KSP and PSP which, as discussed below, will be conducted after publication of these preliminary results.

B. Test of Home Market Prices

To determine if sales below cost had been made over an extended period of time, we compared the number of months in which sales below cost had occurred for a particular model to the number of months in which the model was sold. If the model was sold in three or fewer months, we did not find that below-cost sales were made over an extended period of time unless there were sales below cost of that model in each month. If a model was sold in more than three months, we did not find that below-cost sales were made over an extended period of time unless there were sales below cost in at least three of the months in which the models were sold.

Since none of the respondents has submitted information indicating that any of its sales below cost were at prices which would have permitted ''recovery of all costs within a reasonable period of time in the normal course of trade,'' within the meaning of section 773(b)(2) of the Act, we cannot reasonably conclude that the costs of production of such sales were recovered within a reasonable period.

C. Results of COP Test

In accordance with section 773(b) of the Act, in determining whether to disregard home market sales made at prices below the cost of production, we examined whether such sales were made in substantial quantities over an extended period of time. When less than 10 percent of the home market sales of a particular model were at prices below the cost of production, we found that substantial quantities of such sales were not made and did not disregard any sales of that model. When 10 percent or more, but not more than 90 percent, of the home market sales of a particular model were determined to be below cost, we determined that substantial quantities of such sales were made and excluded the below-cost home market sales from our calculation of FMV, provided that these below-cost sales were made over an extended period of time. When more than 90 percent of the home market sales of a particular model were made below cost over an extended period of time, we disregarded all home market sales of that model from our calculation of FMV and used CV. As a result, we disregarded below-cost sales when the conditions described above were met.

We found that KSP, PSP, Dongbu, and Union all made sales below cost in substantial quantities over an extended period of time. We therefore excluded these sales from our analysis and used the remaining sales as the basis for determining FMV in accordance with section 773(b) of the Act.

Constructed Value

We calculated CV in accordance with section 773(e) of the Act. We included the cost of materials, fabrication, general expenses, profit, and packing. To calculate CV we used: (1) Actual general expenses, or the statutory minimum of ten percent of the cost of materials and fabrication, whichever was greater; (2) actual profit or the statutory minimum of eight percent of the cost of materials, fabrication, and general expenses, whichever was greater; and (3) packing costs for merchandise exported to the United States. Where appropriate, we made adjustments to CV, in accordance with 19 CFR 353.56, for differences in circumstances of sale. For comparisons to PP sales, we deducted home market direct selling expenses and added U.S. direct selling expenses. For comparisons to ESP sales, we deducted home market direct selling expenses. We also made adjustments, where applicable, for home market indirect selling expenses to offset U.S. commissions in PP and ESP calculations. For comparisons involving ESP transactions, we made further deductions for CV for indirect selling expenses in the home market, capped by the indirect selling expenses incurred on ESP sales in accordance with 19 CFR 353.56(b)(2).

Currency Conversion

We made currency conversions based on the official exchange rates in effect on the dates of the U.S. sales as certified by the Federal Reserve Bank.

Verification

As provided in section 776(b) of the Act, we verified information provided by certain respondents using standard verification procedures, including on-site inspection of the manufacturer's facilities, the examination of relevant sales and financial records, and selection of original documentation containing relevant information. Our verification results are outlined in the public versions of the verification reports. Though we have not yet verified the sales data reported by KSP nor the cost data reported by either KSP or PSP we will verify this data prior to completion of the final results. Because we will not verify this information until after the preliminary results are issued, we have extended the comment period for KSP-specific and PSP-specific comments from interested parties to July 25, 1997. Rebuttals to these comments will be due on August 1, 1997. We are doing this so that all parties will have the opportunity to comment on these verifications.

Preliminary Results of Review

As a result of our review, we preliminarily determine the weighted-average dumping margins (in percent) for the period April 28, 1992, through October 31, 1993 to be as follows:

Company	Margin (percent)
Dongbu Steel Co., Ltd.	3.37
Korea Iron Steel Company	8.20
Korea Steel Pipe Co., Ltd	14.13
Pusan Steel Pipe Co., Ltd.	11.21
Union Steel Co., Ltd.	0.76

Parties to this proceeding may request disclosure within 5 days of the date of publication of this notice. Any interested party may request a hearing within 10 days of the date of publication of this notice. A hearing, if requested, will be held at 10 AM on August 4, 1997 in room 1412 in the main Commerce Department building.

Issues raised in the hearing will be limited to those raised in the respective briefs and rebuttal briefs. Briefs from interested parties regarding Dongbu, KISCO, Union, and general comments may be submitted not later than 30 days from the date of publication of these preliminary results, and rebuttal briefs, limited to the issues raised in the respective case briefs, may be submitted not later than 37 days from the date of publication of these preliminary results. As noted above, KSP-specific and PSP-specific comments and rebuttals are due on July 25, 1997 and August 1, 1997, respectively. Parties who submit briefs or rebuttal briefs in this proceeding are requested to submit with each argument (1) a statement of the issue and (2) a brief summary of the argument. The Department will subsequently publish the final results of this administrative review, including the results of its analysis of issues raised in any written briefs or hearings.

Furthermore, the following deposit requirements will be effective upon publication of the final results of review for all shipments of subject merchandise entered, or withdrawn from warehouse, for consumption on or after the date of publication, as provided by section 751(a)(1) of the Tariff Act: (1) The cash deposit rates for the reviewed companies will be the rates determined in the final results of review; (2) for previously investigated companies not listed above, the cash deposit rate will continue to be the company-specific rate published for the most recent period; (3) if the exporter is not a firm covered in this review or the original LTFV investigation, but the manufacturer is, the cash deposit rate will be the rate established for the most recent period for the manufacturer of the merchandise; and (4) the cash deposit rate for all other manufacturers or exporters will continue to be 4.80 percent, the ''All Others'' rate made effective by the amended final determination of the LTFV investigation published on November 3, 1995 (see Circular Welded Non-Alloy Steel Pipe from Korea: Notice of Final Court Decision and Amended Final Determination, 60 FR 55833 (November 3, 1995)).

The Department shall determine, and the Customs Service shall assess, antidumping duties on all appropriate entries. Because the inability to link sales with specific entries prevents entry-by-entry assessments, we will calculate wherever possible an exporter/importer-specific assessment rate.

With respect to PP sales for these preliminary results, we divided the total dumping margins for the reviewed sales (calculated as the difference between FMV and USP) for each importer by the total volume sold to that importer during the POR. We will direct Customs to assess the resulting per-ton dollar amount against each ton of merchandise in each of that importer's entries during the review period. Although this will result in assessing different percentage margins for individual entries, the total antidumping duties collected for each importer for the review period will approximately equal the total dumping margins.

For ESP sales, we divided the total dumping margins for the reviewed sales by the total entered value of those reviewed sales for each importer. We will direct Customs to assess the resulting percentage margin against the entered Customs values for the subject merchandise on each of that importer's entries during the review period. While the Department is aware that the entered value of sales during the POR is not necessarily equal to the entered value of entries during the POR, use of entered value of sales as the basis of the assessment rate permits the Department to collect a reasonable approximation of the antidumping duties which would have been determined if the Department had reviewed those sales of merchandise actually entered during the POR. See Antifriction Bearings (Other Than Tapered Roller Bearings) and Parts Thereof From France, Germany, Italy, Japan, Singapore, Sweden, and the United Kingdom; Final Results of Antidumping Duty Administrative Reviews and Partial Termination of Administrative Reviews, 61 FR 66,472 (December 17, 1996).

This notice also serves as a reminder to importers of their responsibility under 19 CFR 353.26 to file a certificate regarding the reimbursement of antidumping duties prior to liquidation of the relevant entries during this review period. Failure to comply with this requirement could result in the Secretary's presumption that reimbursement of antidumping duties occurred and the subsequent assessment of double antidumping duties.

This administrative review and this notice are in accordance with section 751(a)(1) of the Tariff Act (19 U.S.C. 1675(a)(1)) and 19 CFR 353.22.

Dated: June 16, 1997.

Robert S. LaRussa,

Acting Assistant Secretary for Import Administration.

[FR Doc. 97–17953 Filed 7–8–97; 8:45 am]

BILLING CODE 3510–DS–P

DEPARTMENT OF COMMERCE

International Trade Administration

[A–570–601]

Tapered Roller Bearings and Parts Thereof, Finished and Unfinished, From the People's Republic of China; Preliminary Results of Antidumping Administrative Review and Partial Termination of Administrative Review

AGENCY: Import Administration, International Trade Administration, Department of Commerce.

ACTION: Notice of preliminary results of antidumping duty administrative review of tapered roller bearings and parts thereof, finished and unfinished, from the People's Republic of China and partial termination of administrative review.

SUMMARY: In response to requests by the petitioner and by Peer Bearing Company/Chin Jun Industrial, Ltd. (Chin Jun), the Department of Commerce is conducting an administrative review of the antidumping duty order on tapered roller bearings and parts thereof, finished and unfinished, from the People's Republic of China. The period of review is June 1, 1995, through May 31, 1996.

Although we included Shanghai General Bearing Co., Ltd. in our initiation notice, we subsequently revoked the order with regard to this respondent. Therefore, we are terminating this review with respect to this respondent (see Background section below).

We have preliminarily determined that sales have been made below normal

value by various companies subject to this review. If these preliminary results are adopted in our final results of administrative review, we will instruct U.S. Customs to assess antidumping duties on all appropriate entries.

We invite interested parties to comment on these preliminary results. Parties who submit comments in this proceeding are requested to submit with each argument (1) a statement of the issue and (2) a brief summary of the argument.

EFFECTIVE DATE: July 9, 1997.

FOR FURTHER INFORMATION CONTACT: Thomas O. Barlow or the appropriate case analyst, for the various respondent firms listed below, at Import Administration, International Trade Administration, U.S. Department of Commerce, 14th Street and Constitution Avenue, N.W., Washington D.C. 20230; telephone (202) 482–4733: Andrea Chu: Jilin Machinery Import & Export Corporation (Jilin), Wanxiang Group Corporation (Wanxiang), China National Machinery & Equipment Import & Export Corporation (CMEC); Mike Panfeld: Xiangfan Machinery Foreign Trade Corporation (formerly Xiangfan International Trade Corporation) (Xiangfan), China National Automotive Industry Import & Export Corporation (Guizhou Automotive), Chin Jun; Charles Riggle: Shandong Machinery & Equipment Import & Export Corporation (Shandong), Tianshui Hailin Import & Export Corporation (Hailin), Zhejiang Machinery Import & Export Corporation (Zhejiang); Tom Schauer: Premier Bearing & Equipment, Ltd. (Premier), Shanghai General Bearing Co. Ltd. & General Bearing Corporation (Shanghai), Guizhou Machinery Import & Export Corporation (Guizhou Machinery); Kristie Strecker: China National Machinery Import & Export Corporation (CMC), Luoyang Bearing Factory (Luoyang), Liaoning MEC Group Co., Ltd. (Liaoning), Hangzhou Metals, Mineral, Machinery & Chemical Import Export Corp. (Hangzhou), China Great Wall Industry Corp. (Great Wall).

Applicable Statute

Unless otherwise indicated, all citations to the Tariff Act of 1930, as amended (the Act), are references to the provisions effective January 1, 1995, the effective date of the amendments made to the Act by the Uruguay Round Agreements Act (URAA). In addition, all references to the Department's regulations are to 19 CFR 353 (1997).

Background

On May 27, 1987, the Department of Commerce (the Department) published in the **Federal Register** (52 FR 19748) the antidumping duty order on tapered roller bearings and parts thereof, finished and unfinished (TRBs), from the People's Republic of China (PRC). On June 6, 1996, we published a notice of opportunity to request an administrative review of the order for the period June 1, 1995 through May 31, 1996 (61 FR 28840). In accordance with 19 CFR 353.22(a), the petitioner, The Timken Company, and Chin Jun requested that we conduct an administrative review. On August 8, 1996, in accordance with 19 CFR 353.22(c), we published a notice of initiation of this antidumping duty administrative review (61 FR 41374) for the period of review (POR) June 1, 1995, through May 31, 1996 (the 9th review period).

On August 12, 1996, we sent a questionnaire to the secretary general of the Basic Machinery Division of the Chamber of Commerce for Import & Export of Machinery and Electronics Products (CCCME) and requested that the CCCME identify all companies that manufactured or exported the subject merchandise during the POR. We also requested that the questionnaire be forwarded to all PRC companies identified in our initiation notice for which we did not have addresses. In this letter we also requested information relevant to the issue of whether the companies named in the initiation request are independent from government control. *See Separate Rates* below. Finally, on September 20, 1996, we sent questionnaires directly to the PRC companies for which we had addresses on the record. We also sent questionnaires to the Hong Kong companies listed in our initiation notice, using addresses supplied in the petitioner's initiation request as well as information from the Hong Kong branch of the U.S. & Foreign Commercial Service.

We received responses to our questionnaire from the following 15 of the 324 companies named in the initiation notice: Jilin, Wanxiang, Xiangfan, Guizhou Automotive, Chin Jun, Shandong, Hailin, Zhejiang, Premier, Guizhou Machinery, CMC, Luoyang, Shanghai, CMEC and Liaoning.

We also received a response to the Separate Rates section of the questionnaire from one company, Hangzhou, that was not named in the initiation notice but which was included in the review by virtue of the fact that our initiation was conditionally intended to include, in addition to companies specifically named, all exporters of TRBs from the PRC which were not entitled to rates separate from the PRC entity. *See Initiation of Antidumping and Countervailing Duty Administrative Reviews and Request for Revocation In Part,* 61 FR 41373, 41380 (August 8, 1996).

In addition, we received a response to the Separate Rates section of the questionnaire from Great Wall, which had received a separate rate in the 1994–95 review, but for which no review had been requested for the 1995–96 period. Because we are not reviewing Great Wall's entries for this POR we need not reconsider its separate-rates status at this time. Great Wall's rate will continue to be 25.56 percent, the rate established for that firm in the 1994–95 review.

Shanghai was included by name in our notice of initiation of this review. However, on February 11, 1997, we published a notice of revocation of the order with respect to Shanghai (62 FR 6189). Therefore, we are terminating this review with respect to Shanghai.

The Department is now conducting this administrative review in accordance with section 751 of the Act.

Scope of Review

Merchandise covered by this review includes TRBs and parts thereof, finished and unfinished, from the PRC. This merchandise is classifiable under the *Harmonized Tariff Schedule* (HTS) item numbers 8482.20.00, 8482.91.00.60, 8482.99.30, 8483.20.40, 8483.20.80, 8483.30.80, 8483.90.20, 8483.90.30 and 8483.90.80. Although the HTS item numbers are provided for convenience and customs purposes, our written description of the scope of the order and this review is dispositive.

Verification

As provided in section 782(i) of the Act, we verified information provided by CMC, Guizhou Machinery, Liaoning and Luoyang, using standard verification procedures, including on-site inspection of manufacturers' facilities, the examination of relevant sales and financial records, and selection of original documentation containing relevant information. Because of the large number of producers and resellers included in this review and the limited resources available to the Department, it was impractical to verify factual information for each company. In accordance with 19 CFR 353.36(a)(B) of the regulations, we selected for verification companies for which we had conducted no verification during either of the two immediately preceding reviews. Our verification results are outlined in the

public versions of the verification reports.

Separate Rates

1. Background and Summary of Findings

It is the Department's standard policy to assign all exporters of the merchandise subject to review in non-market-economy (NME) countries a single rate unless an exporter can demonstrate an absence of government control, both in law and in fact, with respect to exports. To establish whether an exporter is sufficiently independent of government control to be entitled to a separate rate, the Department analyzes the exporter in light of the criteria established in the *Final Determination of Sales at Less Than Fair Value: Sparklers from the People's Republic of China* (56 FR 20588, May 6, 1991) (*Sparklers*), as amplified in the *Final Determination of Sales at Less Than Fair Value: Silicon Carbide from the People's Republic of China* (59 FR 22585, May 2, 1994) (*Silicon Carbide*). Evidence supporting, though not requiring, a finding of de jure absence of government control over export activities includes: (1) An absence of restrictive stipulations associated with an individual exporter's business and export licenses; (2) any legislative enactments decentralizing control of companies; and (3) any other formal measures by the government decentralizing control of companies. *See Sparklers* at 20589. Evidence relevant to a *de facto* analysis of absence of government control over exports is based on four factors—whether the respondent: (1) sets its own export prices independent from the government and other exporters; (2) can retain the proceeds from its export sales; (3) has the authority to negotiate and sign contracts; and (4) has autonomy from the government regarding the selection of management. *See Silicon Carbide* at 22587; *see also Sparklers* at 20589.

The Department determined in prior reviews that Guizhou Machinery, Jilin, Luoyang, Liaoning, Guizhou Automotive, CMC, Hailin, Zhejiang, Xiangfan, Shandong and Wanxiang were entitled to separate rates. *See, e.g., Tapered Roller Bearings and Parts Thereof, Finished and Unfinished, From the People's Republic of China; Final Results and Partial Termination of Antidumping Administrative Review,* 62 FR 6173 (February 11, 1997). Information submitted by these companies for the record in the current review is consistent with these findings. Further, there have been no allegations regarding changes in control of these companies in this review. Therefore, we preliminarily determine that the government does not exercise control over the export activities of these firms.

As shown below, Hangzhou also meets both the *de jure* and *de facto* criteria and is entitled, therefore, to a separate rate (*see De Jure Analysis* and *De Facto Analysis, infra).* Accordingly, we preliminarily determine to apply a rate separate from the PRC rate to Hangzhou.

Finally, we note that Premier and Chin Jun are privately owned Hong Kong trading companies. Because we have determined that these firms, rather than their PRC-based suppliers, are the proper respondents with respect to their sales of TRBs to the United States, no separate-rates analyses of Premier's and Chin Jun's suppliers are necessary.

2. De Jure Analysis: Hangzhou

Information submitted during this review indicates that Hangzhou is owned ''by all of the people.'' In *Silicon Carbide* (at 22586), we found that the PRC central government had devolved control of state-owned enterprises, *i.e.,* enterprises owned ''by all of the people.'' As a result, we determined that companies owned ''by all of the people'' were eligible for individual rates if they met the criteria developed in *Sparklers* and *Silicon Carbide*.

The following laws, which have been placed on the record in this case, indicate a lack of *de jure* government control over these companies, and establish that the responsibility for managing companies owned by ''all of the people'' has been transferred from the government to the enterprises themselves. These laws include: ''Law of the People's Republic of China on Industrial Enterprises Owned by the Whole People,'' adopted on April 13, 1988 (1988 Law); ''Regulations for Transformation of Operational Mechanism of State-Owned Industrial Enterprises,'' approved on August 23, 1992 (1992 Regulations); and the ''Temporary Provisions for Administration of Export Commodities,'' approved on December 21, 1992 (Export Provisions). The 1988 Law states that enterprises have the right to set their own prices (*see* Article 26). This principle was restated in the 1992 Regulations (*see* Article IX). Finally, the 1992 ''Temporary Provisions for Administration of Export Commodities'' list those products subject to direct government control. TRBs do not appear on this list and are not subject, therefore, to the constraints of these provisions.

Consistent with *Silicon Carbide,* we preliminarily determine that the existence of these laws demonstrates that Hangzhou, a company owned by ''all of the people,'' is not subject to *de jure* government control with respect to export activities. In light of reports [1] indicating that laws shifting control from the government to the enterprises themselves have not been implemented uniformly, an analysis of *de facto* control is critical in determining whether respondents are, in fact, subject to government control with respect to export activities.

3. De Facto Analysis: Hangzhou

After we reviewed Hangzhou's original response to the separate-rates section of our questionnaire we sent a supplemental questionnaire in order to obtain additional information necessary for our determination of Hangzhou's eligibility for a separate rate. The following record evidence, which is contained in the questionnaire responses, indicates a lack of *de facto* government control over the export activities of Hangzhou. We have found that this respondent's pricing and export strategy decisions with respect to subject merchandise are not subject to any entity's review or approval and that there are no government policy directives that affect these decisions. There are no restrictions on the use of this respondent's revenues or profits, including export earnings.

The company's general manager or chairman of the board has the right to negotiate and enter into contracts, and he may delegate this authority to other employees within the company. There is no evidence that this authority is subject to any level of governmental approval.

The general manager is elected by an employees' assembly consisting of representatives of Hangzhou's employees. The representatives are elected by the general employees. The results of Hangzhou's management elections are recorded with the Foreign Trade and Economic Cooperation Commission. There is no evidence that this commission controls the selection process or that it has rejected a general manager selected through the election process.

Decisions made by Hangzhou concerning purchases of subject

[1] *See* ''PRC Government Findings on Enterprise Autonomy,'' in Foreign Broadcast Information Service—China—93–133 (July 14, 1993), and 1992 Central Intelligence Agency Report to the Joint Economic Committee, Hearings on Global Economic and Technological Change: Former Soviet Union and Eastern Europe and China, Pt. 2 (102 Cong., 2d Sess.).

merchandise from other suppliers are not subject to government approval. Finally, Hangzhou's sources of funds are its own savings or bank loans, and it has sole control over, and access to, its bank accounts, which are held in Hangzhou's own name.

Based on the foregoing analysis of the evidence of record, we find no evidence of either *de jure* or *de facto* government control over the export activities of Hangzhou. Accordingly, we preliminarily determine that Hangzhou is not part of the ''PRC enterprise'' under review and is entitled to a separate rate. Because no interested party requested a review of Hangzhou, it is not subject to this review. Therefore, consistent with our established practice, we have not reviewed Hangzhou's entries during the 1995–96 POR. *See Tapered Roller Bearings and Parts Thereof, Finished and Unfinished, From the People's Republic of China; Final Results and Partial Termination of Antidumping Duty Administrative Review,* 62 FR 6173, 6176 (February 11, 1997). Hangzhou's rate will remain 29.40 percent, the rate assigned to it as a part of the PRC entity in the 1994–95 review.

4. Separate-Rate Determinations for Non-Responsive Companies

We have determined that those companies for which we initiated a review and which did not respond to the questionnaire do not merit separate rates. *See Use of Facts Otherwise Available,* below.

Use of Facts Otherwise Available

We preliminarily determine that, in accordance with section 776(a) of the Act, the use of partial facts available is appropriate for Chin Jun, Premier, Guizhou Machinery and Shandong and the use of total facts available is appropriate for Hailin, Guizhou Automotive, Jilin, CMEC and all companies which have not shown that they are independent of government control and which did not respond to our requests for information. Furthermore, we determine that, pursuant to section 776(b) of the Act, it is appropriate to make inferences adverse to the interests of the non-responding companies because they failed to cooperate by not responding to the best of their abilities.

Where the Department must base its determination on facts available because that respondent failed to cooperate by not acting to the best of its ability to comply with a request for information, section 776(b) of the Act authorizes the Department to use inferences adverse to the interests of that respondent in choosing facts available. Section 776(b) of the Act also authorizes the Department to use as adverse facts available information derived from the petition, the final determination, a previous administrative review, or other information placed on the record. Information from prior segments of the proceeding constitutes secondary information and section 776(c) of the Act provides that the Department shall, to the extent practicable, corroborate that secondary information from independent sources reasonably at its disposal. The Statement of Administrative Action (SAA) provides that ''corroborate'' means simply that the Department will satisfy itself that the secondary information to be used has probative value. (*See* H.R. Doc. 316, Vol. 1, 103d Cong., 2d Sess. 870 (1994).)

To corroborate secondary information, the Department will, to the extent practicable, examine the reliability and relevance of the information to be used. However, unlike other types of information, such as input costs or selling expenses, there are no independent sources for calculated dumping margins. Thus, in an administrative review, if the Department chooses as total adverse facts available a calculated dumping margin from a prior segment of the proceeding, it is not necessary to question the reliability of the margin for that time period. With respect to the relevance aspect of corroboration, however, the Department will consider information reasonably at its disposal as to whether there are circumstances that would render a margin inappropriate. Where circumstances indicate that the selected margin is not appropriate as adverse facts available, the Department will disregard the margin and determine an appropriate margin (*see, e.g., Fresh Cut Flowers from Mexico; Final Results of Antidumping Duty Administrative Review,* 61 FR 6812, 6814 (Feb. 22, 1996) (where the Department disregarded the highest margin as adverse facts available because the margin was based on another company's uncharacteristic business expense resulting in an unusually high margin)).

1. *Companies that did not respond to the questionnaire:* We have preliminarily assigned a margin of 29.40 percent to those companies for which we initiated a review and which did not respond to the questionnaire. This margin, calculated for sales by Wafangdian Bearing Factory during the 1994–95 review, represents the highest overall margin calculated for any firm during any segment of this proceeding. As discussed above, it is not necessary to question the reliability of a calculated margin from a prior segment of the proceeding. Further, there are no circumstances indicating that this margin is inappropriate as adverse facts available. Therefore, we preliminarily find that the 29.40 percent rate is corroborated. As noted in the *Separate Rates* section above, we have also determined that the non-responsive companies do not merit separate rates. Therefore, the facts available for these companies forms the basis for the PRC rate, which is 29.40 percent for this review.

2. *CMEC:* The Department determined in the original investigation of this case that CMEC was entitled to a separate rate. *See Tapered Roller Bearings From the People's Republic of China; Final Determination of Sales at Less Than Fair Value,* 52 FR 19748 (May 27, 1987), and *Tapered Roller Bearings From the People's Republic of China; Amendment to Final Determination of Sales at Less Than Fair Value and Antidumping Duty Order in Accordance With Decision Upon Remand,* 55 FR 6669 (February 26, 1990). However, the Department made the prior separate-rate determination before the development of its amplified analysis in *Silicon Carbide,* which added *de facto* criteria (3) and (4) noted above. Accordingly, for these preliminary results we have examined these two additional criteria with respect to CMEC. Because CMEC failed in its supplemental questionnaire response to provide information concerning the company's management-selection process, we are unable to determine that CMEC meets the *de facto* standards which would indicate an absence of government control. Therefore, we preliminarily determine that CMEC is not entitled to a separate rate and have applied the PRC rate of 29.40 percent.

3. *Jilin:* Jilin provided sufficient information in response to the separate rates section of our questionnaire for us to determine that it is entitled to a separate rate for this review. However, because Jilin did not provide information related to factors of production or to its U.S. sales during the POR as we requested, section 776(a) of the Act requires us to use the facts otherwise available in determining Jilin's margin for the 1995–96 review. Section 776(b) of the Act allows us to use an adverse inference in selecting from the facts otherwise available. As adverse facts available, we have selected 29.40 percent, the highest overall margin calculated in any segment of this proceeding.

4. *Premier:* Premier provided factors data from its suppliers for some models which it sold to the United States. For

a majority of its U.S. sales (see Analysis Memo from analyst to the file, June 23, 1997), Premier, a Hong Kong-based reseller, stated that it was unable to provide factors data from any of its PRC suppliers. However, for some models involved in those sales, Premier provided factors data from other PRC suppliers of the same models. For the remainder of its U.S. sales, Premier reported no factors data.

We have determined that there is little variation in factor-utilization rates among the TRB producers from which we have received factors-of-production data. For this reason we are using, as facts available, the factors data provided by Premier, including information from manufacturers which did not supply Premier during the POR, in order to calculate CV. For Premier's U.S. sales of models for which it reported no factors data, we have applied, as adverse facts available, a margin of 25.56 percent, the highest overall margin ever applicable to Premier. This margin was calculated for sales by Jilin during the 1993–94 review. As discussed above, it is not necessary to question the reliability of a calculated margin from a prior segment of the proceeding. Further, there are no circumstances indicating that this margin is inappropriate as adverse facts are available. Therefore, we preliminarily find that the 25.56 percent rate is corroborated.

5. *Hailin:* We find that Hailin failed to cooperate by not allowing us to conduct an on-site verification of the information the company supplied in its questionnaire responses. We have, therefore, rejected Hailin's submissions in accordance with section 782(e)(4) of the Act. Section 776(b) of the Act allows us to use an adverse inference in selecting from the facts otherwise available when a firm does not permit verification of the information contained in its response. As adverse facts are available, we have determined that Hailin is not entitled to a separate rate, and have applied the PRC rate of 29.40 percent.

6. *Guizhou Automotive:* Guizhou Automotive failed to respond to a supplemental questionnaire in a timely manner. The firm's initial questionnaire response was incomplete, particularly with regard to separate rate issues, SG&A, overhead, packing, scrap, and expenses related to CEP sales. Because Guizhou Automotive did not provide in a timely manner sufficient information for the Department to determine whether Guizhou Automotive is eligible to retain its separate rate, we have determined that Guizhou Automotive is not entitled to a separate rate and have applied the PRC rate of 29.40 percent.

7. *Chin Jun:* Chin Jun provided factors data from its PRC-based supplier for substantially all of its U.S. sales during the POR, and we have used these data to calculate CV for the applicable models. For certain other models it sold to the United States, Chin Jun provided factors data from other PRC suppliers of the same models. However, we have determined that the data submitted by Chin Jun for two such suppliers is unacceptable and have rejected these data. Because our decision relies on business proprietary information it is discussed further in the business proprietary analysis memo from analyst to the file dated June 30, 1997. For the remainder of its U.S. sales, Chin Jun reported no factors data.

We determined that there is little variation in factor-utilization rates among the TRBs producers from which we have received factors-of-production data. For this reason we have calculated CV using, as facts available, the factors data provided by Chin Jun for PRC-based suppliers from which Chin Jun did not purchase the models in question. Chin Jun has stated that it attempted to obtain from its PRC-based suppliers factors data for the remaining U.S. sales. Because we preliminarily determine that Chin Jun cooperated to the best of its ability to provide data, we are applying to Chin Jun's U.S. sales for which no factors data were reported, as facts available, the weighted-average margin calculated for those U.S. sales for which acceptable data were reported. However, we intend to seek documentation of Chin Jun's claim's that it attempted to solicit from all of its PRC-based suppliers the information requested in our questionnaires.

8. *Shandong:* Shandong purchased TRBs for resale to the United States from a supplier whose factors data we determined to be unacceptable. Because our decision relies on business proprietary information it is discussed further in the business proprietary analysis memo from analyst to the file dated June 23, 1997. Therefore, for Shandong's sales of TRBs purchased from this particular supplier we have applied, as facts available, a margin of 29.40 percent, the highest rate calculated during any segment of this proceeding.

9. *Guizhou Machinery:* Guizhou Machinery provided factors data from its suppliers for models which represented most of its U.S. sales during the POR. For some models, Guizhou Machinery failed to report factors data. For Guizhou Machinery's U.S. sales of models for which it did not provide factors data we have applied, as adverse facts available, a margin of 17.65 percent, the highest overall margin ever applicable to Guizhou Machinery.

In addition, we used partial facts available for other factors data provided by Guizhou Machinery. However, because of the proprietary nature of this situation, we have discussed this use of partial facts available in Guizhou Machinery's preliminary analysis memorandum dated June 23, 1997.

Duty Absorption

On September 6, 1996, the Timken Company requested that the Department determine with respect to all respondents whether antidumping duties had been absorbed during the POR. This request was filed pursuant to section 751(a)(4) of the Act. On June 11, 1997, the Timken Company withdrew its request for a duty absorption determination in this review. Accordingly, we have not made a determination as to whether antidumping duties have been absorbed by a foreign producer or exporter subject to the order.

United States Sales

Both Premier and Chin Jun reported that they maintain inventories in Hong Kong and, therefore, their PRC-based suppliers have no knowledge when they sell to these firms that the shipments are destined for the United States. Accordingly, Premier and Chin Jun are the first parties to sell the merchandise to the United States and export price (EP) and constructed export price (CEP) are properly based on their respective U.S. sales.

For sales made by Guizhou Machinery, Liaoning, Luoyang, Premier, Xiangfan, Shandong and Zhejiang, we based the U.S. sales on export price (EP), in accordance with section 772(a) of the Act, because the subject merchandise was sold to unrelated purchasers in the United States prior to importation into the United States and because the constructed export price (CEP) methodology was not indicated by other circumstances. For sales made by Chin Jun we based the U.S. sales on CEP in accordance with section 772(b) of the Act because the first sale to an unrelated purchaser occurred after importation of the merchandise into the United States. CMC had a combination of EP and CEP sales subject to review.

We calculated EP based on, as appropriate, the FOB, CIF or C&F port price to unrelated purchasers. We made deductions for brokerage and handling, foreign inland freight, ocean freight, and marine insurance. When marine insurance and ocean freight were provided by PRC-owned companies, we based the deduction on surrogate

values. *See Final Determination of Sales at Less Than Fair Value: Saccharin from the People's Republic of China,* 59 FR 58818, 58825 (November 15, 1994). For Premier and Chin Jun, because marine insurance and ocean freight were provided by market-economy companies, we based the deduction on the actual expense values reported by Premier and Chin Jun for these services. We valued foreign inland freight deductions using surrogate data based on Indian freight costs. We selected India as the surrogate country for the reasons explained in the *Normal Value* section of this notice.

We calculated CEP based on the packed, ex-warehouse price from the U.S. subsidiary to unrelated customers. We made deductions from the starting price for CEP for international freight, foreign brokerage & handling, foreign inland freight, marine insurance, customs duties, U.S. brokerage, U.S. inland freight insurance and U.S. inland freight. In accordance with section 772(d)(1) of the Act, we made further deductions from the starting price for CEP for the following selling expenses that related to economic activity in the United States: commissions; direct selling expenses, including advertising, warranties, and credit expenses; and indirect selling expenses, including inventory carrying costs. In accordance with section 772(d)(3) of the Act, we have deducted from the starting price an amount for profit.

Normal Value

Section 773(c) of the Act provides that the Department shall determine the normal value (NV) using a factors-of-production methodology if (1) the merchandise is exported from an NME country, and (2) available information does not permit the calculation of NV using home market prices, third-country prices, or constructed value (CV) under section 773(a). In such cases, the factors include, but are not limited to: (1) hours of labor required; (2) quantities of raw materials employed; (3) amounts of energy and other utilities consumed; and (4) representative capital cost, including depreciation.

The Department has treated the PRC as an NME country in all previous cases. In accordance with section 771(18)(C)(i), any determination that a foreign country is an NME country shall remain in effect until revoked by the administering authority. Furthermore, available information does not permit the calculation of NV using home market prices, third-country prices, or CV under section 773(a). Therefore, except as noted below, we calculated NV based on factors of production in accordance with section 773(c) of the Act and section 353.52 of our regulations. *See* Memorandum from the analyst to the file, dated June 20, 1997.

Although Premier and Chin Jun are Hong Kong companies, we also calculated NV for Premier and Chin Jun based on factors-of-production data. We did not use these respondents' third-country sales (they had no Hong Kong sales) in calculating NV because their PRC-based suppliers knew at the time of sale that the subject merchandise was destined for exportation. *See* section 773(a)(3)(A) of the Act, providing that under such conditions NV of a product exported from an intermediate country to the United States may be determined in the country of origin of the subject merchandise. Accordingly, we calculated NV for Premier and Chin Jun on the basis of PRC production inputs and surrogate country factor prices. For certain models for which Premier and Chin Jun reported no factors data we based NV on the facts available in this review. *See Use of Facts Otherwise Available* above.

In accordance with section 773(c)(4), we valued PRC factors of production, to the extent possible, using the prices or costs of factors of production in a market-economy country that is: (1) at a level of economic development comparable to that of the NME country, and (2) a significant producer of comparable merchandise.

We chose India as the most comparable surrogate on the basis of the criteria set out in 19 CFR 353.52(b). *See* Memorandum from Director, Office of Policy to Office Director, AD/CVD Enforcement Group I, Office 3, dated May 28, 1997. We chose Indonesia as the second-choice surrogate based on the same memorandum. Information on the record indicates that both India and Indonesia are significant producers of TRBs. *See* Memorandum from the analyst to the file, dated June 3, 1997. We used publicly available information relating to India to value the various factors of production with the exception of steel inputs and scrap. For valuing steel inputs and scrap we used publicly available information relating to Indonesia because we determined that publicly available information related to India was unreliable.

We valued the factors of production as follows:

For hot-rolled alloy steel bars used in the production of cups and cones, cold-rolled steel rods used in the production of rollers, cold-rolled steel sheet, cold-rolled steel sheet used in the production of cages, and steel scrap, we used import prices obtained from *Foreign Trade Statistical Bulletin, Imports,* Jakarta, Indonesia. We used data from the November 1995 issue, which included cumulative data covering the period January 1995 through November 1995. We subtracted cumulative data from the May 1995 issue, covering the period January 1995 through May 1995, because these data were not within the POR. We applied data for the period June 1995 through November 1995, the first six months of the POR, to the entire POR because we were unable to obtain more recent information. However, for steel bar used to produce cups and cones, the steel rod used to produce rollers and for the relevant steel scrap category, interested parties provided data through December 1995, on a country-specific basis. We used these data because we were able to eliminate from our calculation steel imports sourced from NME countries and small quantities sourced from market-economy countries. We made adjustments to include freight costs incurred between the PRC-based steel suppliers and the TRB factories.

For direct labor, we used 1996 data from *Investing, Licensing & Trading Conditions Abroad, India,* published in November 1996 by the Economist Intelligence Unit. We then adjusted the 1996 labor value to the POR to reflect inflation using consumer price indices (CPI) of India as published in the *International Financial Statistics* by the International Monetary Fund (IMF). We calculated the labor cost for each component by multiplying the labor time requirement by the surrogate labor rate. Indirect labor is reflected in the selling, general and administrative (SG&A) and overhead rates.

For factory overhead, we used information obtained from the 1995–96 annual report of SKF Bearings India, Ltd. (SKF India), a producer of similar merchandise in India. *See SKF Bearings India, Ltd. Annual Report 1995–96.* From this source, we were able to calculate factory overhead as a percentage of total cost of manufacture.

For SG&A expenses, we used information obtained from the same financial report used to obtain factory overhead. This information showed SG&A expenses as a percentage of the cost of manufacture.

For profit, we used SKF India's profit rate. The annual report showed profit as a percentage of cost of production.

For export packing, we used the facts available because the respondents did not supply sufficient factor information for us to calculate packing costs. As facts available we used 1 percent of the sum of total ex-factory costs and SG&A expenses. This percentage, obtained from publicly available data, was used

in the *Final Determination of Sales at Less than Fair Value: Tapered Roller Bearings from Italy,* 52 FR 24198 (June 29, 1987). This methodology is consistent with the Department's valuation of packing in the *Final Results of Antidumping Duty Administrative Review: Tapered Roller Bearings from the People's Republic of China,* 56 FR 67590 (December 31, 1991), and subsequent reviews of this order. We used this percentage because there was no publicly available information from a comparable surrogate country.

For foreign inland freight, as the most recent publicly available published source, we used a rate derived from a newspaper article in the April 20, 1994 issue of *The Times of India,* as submitted in the antidumping duty investigation on honey from the PRC. We adjusted the value of freight to the POR using a wholesale price index (WPI) published by the International Monetary Fund (IMF).

We made no adjustments to CV for selling expenses because the surrogate SG&A information we used did not allow a breakout of selling expenses.

Partial Termination of Review

Shanghai was included in our notice of initiation of this review. However, on February 11, 1997, we published a notice of revocation of the order with respect to Shanghai (62 FR 6189). Therefore, we are terminating this review with respect to Shanghai.

Petitioner requested reviews for East Sea Bearing Co., Ltd. (East Sea), and Changshan Bearing Factory (Changshan). On August 26, 1996, East Sea and Changshan both reported no shipments of subject merchandise to the United States during the POR. We independently confirmed with U.S. Customs that there were no shipments from these two companies. Therefore, we have terminated the review with respect to East Sea. *See Calcium Hypochlorite From Japan: Termination of Antidumping Duty Administrative Review,* 62 FR 18086 (April 14, 1997). However, because Changshan has not been granted a separate rate the deposit rate applicable to Changshan will continue to be the PRC rate as established in the final results of this review.

Currency Conversion

We made currency conversions in accordance with section 773A of the Act. Currency conversions were made at the rates certified by the Federal Reserve Bank. Section 773A(a) directs the Department to use a daily exchange rate to convert foreign currencies into U.S. dollars unless the daily rate involves a ''fluctuation.'' It is our practice to find that a fluctuation exists when the daily exchange rate differs from a benchmark rate by 2.25 percent or more. *See Preliminary Results of Antidumping Duty Administrative Review: Certain Welded Carbon Steel Pipe and Tube from Turkey,* 61 FR 35188, 35192 (July 5, 1996). The benchmark rate is defined as the rolling average of the rates for the past 40 business days.

Preliminary Results of the Review

As a result of our comparison of the EP or CEP, as applicable, to NV, we preliminarily determine that the following dumping margins exist for the period June 1, 1995, through May 31, 1996:

Manufacturer/Exporter [2] [3]	Margin (percent)
Wanxiang	8.70
Shandong	14.65
Luoyang	3.16
CMC	0.00
Xiangfan	1.55
Guizhou Machinery	20.19
Zhejiang	0.10
Jilin	29.40
Liaoning	0.03
Premier	5.42
Chin Jun	3.41

[2] Although Hangzhou has not been assigned a rate for this review we note that its independent rate will continue to be 29.40 percent, the rate assigned in the 1994–95 review, in which Hangzhou was considered part of the PRC entity and was not specifically named.

[3] The PRC rate applies to CMEC, Hailin, Guizhou Automotive and all firms which did not respond to the questionnaire and which are not entitled to a separate rate.

Parties to the proceeding may request disclosure within five days of the date of publication of this notice. Any interested party may request a hearing within 10 days of publication. Any hearing, if requested, will be held approximately 44 days after the publication of this notice. Interested parties may submit written comments (case briefs) within 30 days of the date of publication of this notice. Rebuttal comments (rebuttal briefs), which must be limited to issues raised in the case briefs, may be filed not later than 37 days after the date of publication. The Department will issue a notice of final results of this administrative review, including the results of its analysis of issues raised in any such written comments, within 120 days of publication of these preliminary results.

The Department shall determine, and the Customs Service shall assess, antidumping duties on all appropriate entries. Individual differences between EP or CEP, as applicable, and NV may vary from the percentages stated above. The Department will issue appraisement instructions directly to the Customs Service.

Furthermore, the following cash deposit requirements will be effective upon publication of the final results of this administrative review for all shipments of the subject merchandise entered, or withdrawn from warehouse, for consumption on or after the publication date, as provided for by section 751(a)(1) of the Act: (1) For the PRC companies named above that have separate rates and were reviewed (Guizhou Machinery, Luoyang, Jilin, Liaoning, CMC, Zhejiang, Xiangfan, Shandong, Wanxiang), the cash deposit rates will be the rates for these firms established in the final results of this review, except that for exporters with *de minimis* rates, *i.e.,* less than 0.50 percent, no deposit will be required; (2) for Hangzhou, which we preliminarily determine to be entitled to a separate rate, the rate will continue be 29.40 percent, the rate which currently applies to this company; (3) for PRC companies (*e.g.,* Great Wall) which established eligibility for a separate rate in a previous review and for which no review was requested, the cash deposit rate will continue to be the rate assigned in the previous review; (4) for all remaining PRC exporters, all of which were found to not be entitled to separate rates, the cash deposit will be 29.40 percent; and (5) for non-PRC exporters Premier and Chin Jun the cash deposit rates will be the rates established in the final results of this review; (6) for non-PRC exporters of subject merchandise from the PRC, other than Premier and Chin Jun, the cash deposit rate will be the rate applicable to the PRC supplier of that exporter. These deposit requirements, when imposed, shall remain in effect until publication of the final results of the next administrative review.

This notice also serves as a preliminary reminder to importers of their responsibility under 19 CFR 353.26 to file a certificate regarding the reimbursement of antidumping duties prior to liquidation of the relevant entries during this review period. Failure to comply with this requirement could result in the Secretary's presumption that reimbursement of antidumping duties occurred and the subsequent assessment of double antidumping duties.

This administrative review and notice are in accordance with section 751(a)(1) of the Act (19 U.S.C. 1675(a)(1)) and 19 CFR 353.22.

Dated June 30, 1997.

Robert S. LaRussa,

Acting Assistant Secretary for Import Administration.

[FR Doc. 97–17948 Filed 7–8–97; 8:45 am]

BILLING CODE 3510–DS–P

DEPARTMENT OF COMMERCE

International Trade Administration

[C–351–406]

Certain Agricultural Tillage Tools From Brazil; Preliminary Results of Countervailing Duty Administrative Review

AGENCY: Import Administration, International Trade Administration, Department of Commerce.

ACTION: Notice of preliminary results of countervailing duty administrative review.

SUMMARY: The Department of Commerce (the Department) is conducting an administrative review of the countervailing duty order on certain agricultural tillage tools from Brazil. We preliminarily determine the net subsidy to zero percent *ad valorem* from Marchesan for the period January 1, 1995 through December 31, 1995. If the final results remain the same as these preliminary results of administrative review, we will instruct the U.S. Customs Service to liquidate, without regard to countervailing duties, all shipments of the subject merchandise from Marchesan exported on or after January 1, 1995 and on or before December 31, 1995. Interested parties are invited to comment on these preliminary results. (See Public Comment section of this notice.)

EFFECTIVE DATE: July 9, 1997.

FOR FURTHER INFORMATION CONTACT: Gayle Longest or Lorenza Olivas, Office of CVD/AD Enforcement VI, Import Administration, International Trade Administration, U.S. Department of Commerce, 14th Street and Constitution Avenue, NW., Washington, D.C. 20230; telephone: (202) 482–3338 or (202) 482–2786.

SUPPLEMENTARY INFORMATION:

Background

On October 22, 1985, the Department published in the **Federal Register** (57 FR 42743) the countervailing duty order on certain agricultural tillage tools from Brazil. On October 1, 1996, the Department published a notice of ''Opportunity to Request an Administrative Review'' (61 FR 51259) of this countervailing duty order. We received a timely request for review, and we initiated the review, covering the period January 1, 1995 through December 31, 1995, on November 15, 1996 (61 FR 58513).

In accordance with 19 CFR 355.22(a), this review covers only those producers or exporters of the subject merchandise for which a review was specifically requested. Accordingly, this review covers Marchesan Implementos Agricolas, S.A. (Marchesan). This review also covers five programs.

Applicable Statute and Regulations

Unless otherwise indicated, all citations to the statute are references to the provisions of the Tariff Act of 1930, as amended by the Uruguay Round Agreements Act (URAA) effective January 1, 1995 (the Act). In addition, unless otherwise indicated, all citations to the Department's regulations are to regulations, as amended by the interim regulations published in the **Federal Register** on May 11, 1995 (60 FR 25130). The Department is conducting this administrative review in accordance with section 751(a) of the Act.

Scope of the Review

Imports covered by this review are shipments of certain round shaped agricultural tillage tools (discs) with plain or notched edge, such as colters and furrow-opener blades. During the review period, such merchandise was classifiable under item numbers 8432.21.00, 8432.29.00, 8432.80.00 and 8432.90.00 of the *Harmonized Tariff Schedule* (HTS). The HTS item numbers are provided for convenience and Customs purposes. The written description remains dispositive.

Partial Revocation

On October 30, 1996, Marchesan requested an administrative review pursuant to 19 CFR 355.22(a)(2), and partial revocation of the countervailing duty order with regard to Marchesan pursuant to 19 CFR 355.25. After examining Marchesan's request, the Department determined that the company did not meet the minimum revocation requirements of § 355.25(b)(3).

Under 19 CFR 355.25(b)(3), in order to be considered for revocation, a producer or exporter must have participated in, and been found to have received no subsidies for, five consecutive review periods with no intervening review period for which a review was not conducted. In October 1992, Marchesan requested an administrative review for 1991. Subsequently, Marchesan withdrew its request and the Department terminated the administrative review for 1991 (59 FR 56067) and there was no administrative review in 1992. Therefore, because Marchesan has participated in only three consecutive administrative reviews in the past five years, we preliminarily determine that Marchesan has not satisfied the five consecutive review periods requirement. In addition, with its request for revocation, a company must submit both government and company certifications that the company neither applied for nor received any net subsidy during the period of review and will not apply for or receive any net subsidy in the future, as well as the agreement described in 19 CFR 355.25.(a)(3)(iii). Marchesan did not provide either the government certification or the company agreement required by the Department's regulations. Therefore, Marchesan did not meet the threshold requirements for revocation. (See letter from Barbara E. Tillman, Director, Office of CVD/AD Enforcement VI, dated December 10, 1996, which is a public document on file in the Central Records Unit (room B–009 of the Department of Commerce)).

Analysis of Programs

I. Programs Preliminarily Determined To Be Not Used

We examined the following programs and preliminarily determine that Marchesan did not apply for or receive benefits under these programs during the period of review:

A. Accelerated Depreciation for Brazilian-Made Capital Goods.

B. Preferential Financing for Industrial Enterprises by Banco do Brasil (FST and EGF loans).

C. SUDENE Corporate Income Tax Reduction for Companies Located in the Northeast of Brazil.

D. Preferencial Financing under PROEX (formerly under Resolution 68 and 509 through FINEX).

E. Preferencial Financing under FINEP.

Preliminary Results of Review

For the period January 1, 1995 through December 31, 1995, we preliminarily determine the net subsidy for Marchesan to be zero percent *ad valorem*. If the final results of this review remain the same as these preliminary results, the Department intends to instruct the U.S. Customs Service to liquidate, without regard to countervailing duties, shipments of the subject merchandise from Marchesan exported on or after January 1, 1995, and on or before December 31, 1995.

The Department also intends to instruct Customs to collect a cash

deposit of estimated countervailing duties of zero percent *ad valorem*, as provided for by section 751(a)(1) of the Act, on all shipments of this merchandise from Marchesan, entered or withdrawn from warehouse, for consumption on or after the date of publication of the final results of this administrative review.

Because the URAA replaced the general rule in favor or a country-wide rate with a general rule in favor of individual rates for investigated and reviewed companies, the procedures for establishing countervailing duty rates, including those for non-reviewed companies, are now essentially the same as those in antidumping cases, except as provided for in section 777A(e)(2)(B) of the Act. The requested review will normally cover only those companies specifically named. Pursuant to 19 CFR 355.22(g), for all companies for which a review was not requested, duties must be assessed at the cash deposit rate, and cash deposits must continue to be collected, at the rate previously ordered. As such, the countervailing duty cash deposit rate applicable to a company can no longer change, except pursuant to a request for a review of that company. *See Federal-Mogul Corporation and The Torrington Company* v. *United States*, 822 F. Supp. 782 (CIT 1993) and *Floral Trade Council* v. *United States*, 822 F. Supp. 766 (CIT 1993) (interpreting 19 CFR 353.22(e), the antidumping regulation on automatic assessment, which is identical to 19 CFR 355.22(g)). Therefore, the cash deposit rates for all companies except those covered by this review will be unchanged by the results of this review.

We will instruct Customs to continue to collect cash deposits for non-reviewed companies at the most recent company-specific or country-wide rate applicable to the company. These rates shall apply to all non-reviewed companies until a review of a company assigned these rates is requested. In addition, for the period January 1, 1995 through December 31, 1995, the assessment rates applicable to all non-reviewed companies covered by this order are the cash deposit rates in effect at the time of entry.

Public Comment

Parties to the proceeding may request disclosure of the calculation methodology and interested parties may request a hearing no later than 10 days after the date of publication of this notice. Interested parties may submit written arguments in case briefs on these preliminary results within 30 days of the date of publication. Rebuttal briefs, limited to arguments raised in case briefs, may be submitted seven days after the time limit for filing the case brief. Parties who submit argument in this proceeding are requested to submit with the argument (1) a statement of the issue and (2) a brief summary of the argument. Any hearing, if requested, will be held seven days after the scheduled date for submission of rebuttal briefs. Copies of case briefs and rebuttal briefs must be served on interested parties in accordance with 19 CFR 355.38.

Representatives of parties to the proceeding may request disclosure of proprietary information under administrative protective order no later than 10 days after the representative's client or employer becomes a party to the proceeding, but in no event later than the date the case briefs, under 19 CFR 355.38, are due. The Department will publish the final results of this administrative review including the results of its analysis of issues raised in any case or rebuttal brief or at a hearing.

This administrative review and notice are in accordance with section 751(a)(1) of the Act (19 U.S.C. 1675(a)(1)).

Dated: July 1, 1997.

Robert S. LaRussa,

Acting Assistant Secretary for Import Administration.

[FR Doc. 97–17946 Filed 7–8–97; 8:45 am]

BILLING CODE 3510–DS–M

DEPARTMENT OF COMMERCE

International Trade Administration

[C–337–802]

Notice of Initiation of Countervailing Duty Investigation: Fresh Atlantic Salmon From Chile

AGENCY: Import Administration, International Trade Administration, Department of Commerce.

EFFECTIVE DATE: July 9, 1997.

FOR FURTHER INFORMATION CONTACT: Elizabeth A. Graham at (202) 482–4105 or Rosa S. Jeong at (202) 482–1278, Import Administration, U.S. Department of Commerce, Room 3099, 14th Street and Constitution Avenue, N.W., Washington, DC 20230.

Initiation of Investigation

The Applicable Statute

Unless otherwise indicated, all citations to the statute are references to the provisions of Tariff Act of 1930 (the Act), as amended by the Uruguay Round Agreements Act effective January 1, 1995. In addition, unless otherwise indicated, all citations to the Department's regulations refer to the regulations, codified at 19 CFR part 355, as they existed on April 1, 1997.

The Petition

On June 12, 1997, the Department of Commerce (the Department) received a petition filed in proper form by the Coalition for Fair Atlantic Salmon Trade (FAST) and the following individual members of FAST: Atlantic Salmon of Maine; Cooke Aquaculture U.S., Inc.; DE Salmon, Inc.; Global Aqua—USA, LLC; Island Aquaculture Corp.; Maine Coast Nordic, Inc.; ScanAm Fish Farms; and Treats Island Fisheries (collectively referred to hereafter as ''the petitioners''). A supplement to the petition was filed on June 26, 1997.

On June 27 and July 1, 1997, the Department held consultations with representatives of the Government of Chile (GOC) pursuant to section 702(b)(4)(ii) of the Act (*see* July 1, 1997 memoranda to the File regarding these consultations). During these consultations, the GOC submitted copies of public laws relating to certain programs alleged in the petition.

In accordance with section 701(a) of the Act, petitioners allege that producers and exporters of the subject merchandise in Chile receive countervailable subsidies.

The petitioners state that they have standing to file the petition because they are interested parties, as defined under section 771(9)(C) of the Act.

Scope of Investigation

The scope of this investigation covers fresh, farmed Atlantic salmon, whether imported ''dressed'' or cut. Atlantic salmon is the species Salmo salar, in the genus Salmo of the family salmoninae. ''Dressed'' Atlantic salmon refers to salmon that has been bled, gutted, and cleaned. Dressed Atlantic salmon may be imported with the head on or off; with the tail on or off; and with the gills in or out. All cuts of fresh Atlantic salmon are included in the scope of the investigation. Examples of cuts include, but are not limited to: Crosswise cuts (steaks), lengthwise cuts (fillets), lengthwise cuts attached by skin (butterfly cuts), combinations of crosswise and lengthwise cuts (combination packages), and Atlantic salmon that is minced, shredded, or ground. Cuts may be subjected to various degrees of trimming, and imported with the skin on or off and with the ''pin bones'' in or out.

Excluded from the scope of this petition are (1) fresh Atlantic salmon that is ''not farmed'' (*i.e.*, wild Atlantic salmon); (2) live Atlantic salmon and Atlantic salmon that has been subjected

to further processing, such as frozen, canned, dried, and smoked Atlantic salmon; and (3) Atlantic salmon that has been further processed into forms such as sausages, hot dogs, and burgers.

The merchandise subject to this investigation is classified at statistical reporting numbers 0302.12.0003 and 0304.10.4091 of the Harmonized Tariff Schedule (HTS) of the United States. Although the HTS numbers are provided for convenience and Customs purposes, the written description of the merchandise is dispositive.

During pre-filing consultations and as a result of our review of the petition, we discussed with the petitioners whether the proposed scope was an accurate reflection of the product for which the domestic industry is seeking relief. We noted that the scope in the petition appeared to include both farmed and not farmed Atlantic salmon. The petitioners subsequently notified the Department on June 26, 1997, that Atlantic salmon that is not farmed should be excluded from the scope of the investigation. Accordingly, we have done so.

We are setting aside a period for interested parties to raise issues regarding product coverage. The Department will accept such comments until August 4, 1997. This period of scope consultation is intended to provide the Department ample opportunity to consider all comments and consult with parties prior to the issuance of the preliminary determination.

Determination of Industry Support for the Petition

Section 702(c)(4)(A) of the Act requires that the Department determine, prior to the initiation of an investigation, that a minimum percentage of the domestic industry supports a countervailing duty petition. A petition meets these minimum requirements if the domestic producers or workers who support the petition account for: (1) At least 25 percent of the total production of the domestic like product, and (2) more than 50 percent of the production of the domestic like product produced by that portion of the industry expressing support for, or opposition to, the petition. Under section 702(c)(4)(D) of the Act, if the petitioners account for more than 50 percent of the total production of the domestic like product, the Department is not required to poll the industry to determine the extent of industry support.

Based on U.S. salmon production information published by the State of Maine Department of Marine Resources and the Washington Farmed Salmon Commission, the petitioners claimed that they account for over 70 percent of total production of fresh Atlantic salmon in the United States. The petitioners further claimed that, when the U.S. producers related to foreign producers are excluded from the analysis, the petitioners represent approximately 97 percent of domestic production of fresh Atlantic salmon.

On June 27, 1997, the Association of Chilean Salmon and Trout Producers (the Association) contested the petitioners' standing claim. The Association stated that the petitioners' standing calculations focused exclusively on dressed salmon producers while ignoring U.S. fillet producers and claimed that fillet salmon represents a separate domestic like product from dressed salmon under the five-part domestic like product test used by the International Trade Commission (ITC). The Association argued that these facts suggest: (1) The petitioners do not have standing with respect to fillets, and; (2) even if the Department accepts the petitioners' single domestic like product definition, the petitioners have failed to provide adequate industry support data since fillet producers represent a significant portion of the industry producing the domestic like product. This submission included certain letters in opposition to the petition submitted by U.S. fillet processors, some of whom identified themselves as importers of dressed salmon from Chile.

On June 30, 1997, the petitioners submitted a rebuttal, stating that the Association failed to refute the ''total domestic production'' and ''percent of production'' industry support figures contained in the petition and failed to provide any information that would indicate that the petitioners do not have standing even under a two-like-product analysis. The petitioners argued that the facts in this case do not support a finding that fillet salmon is a separate domestic like product because there are no clear dividing lines, in terms of characteristics or uses, between dressed salmon and salmon fillets. Specifically, petitioners contended that, *inter alia*,: (1) Salmon fillets are derived from dressed Atlantic salmon and, in fact, all forms of fresh Atlantic salmon include the salmon meat that is ultimately consumed; (2) respondents focused solely on one cut of fresh Atlantic salmon (fillet) while ignoring other cuts (*e.g.*, steak); (3) the one cutting step that does play a significant role in the physical characteristic of the product (the initial cutting of the fish in order to bleed it) has been performed on both dressed and fillet salmon;[1] and (4) fillet cutting is not a ''value added'' operation, but instead results in a higher-priced end product primarily because much waste has been eliminated. With respect to the last point, the petitioners argued that the price trends of fillets compared with dressed salmon suggest that there is no value added, but in fact negative value added, because the price of Chilean fillets, when adjusted for the cost of processing dressed salmon into fillets, is less than the price of dressed salmon.

On July 1, 1997, the Association submitted further comments in response to the petitioners' arguments.

Section 771(4)(A) of the Act defines the ''industry'' as the producers of a domestic like product. Thus, to determine whether the petition has the requisite industry support, the statute directs the Department to look to producers and workers who account for production of the domestic like product. The ITC, which is responsible for determining whether ''the domestic industry'' has been injured, must also determine what constitutes a domestic like product in order to define the industry. However, while both the Department and the ITC must apply the same statutory provision regarding the domestic like product (section 771(10) of the Act), they do so for different purposes and pursuant to separate and distinct authority. In addition, the Department's determination is subject to limitations of time and information. Although this may result in different definitions of the domestic like product, such differences do not render the decision of either agency contrary to the law.[2] Therefore, we have examined the Association's arguments regarding the definition of the domestic like product in the petition in the context of the statutory provisions governing initiation and the facts of the record.

The Association's contention is based on an examination of like product determinations made in prior ITC cases, and follows an analysis of factors traditionally examined by the ITC. However, as noted above, the Department's analysis of like product is not bound by ITC practice. The Department's analysis begins with section 771(10) of the Act, which

[1] In this respect, the petitioners distinguish this case from the like product decisions in *Live Swine and Pork from Canada*, Inv. No. 701–TA–22 (Final), USITC pub. 2218 (September 1989).

[2] *See Algoma Steel Corp., Ltd.* v. *United States*, 688 F. Supp. 639, 642–44 (CIT 1988); High Information Content Flat Panel Displays and Display Glass Therefor From Japan: Final Determination; Rescission of Investigation and Partial Dismissal of Petition, 56 FR 32376, 32380–81 (July 16, 1991).

defines domestic like product as ''a product that is like, or in the absence of like, most similar in characteristics and uses with, the article subject to an investigation under this title.'' After considering the information presented by the petitioner and the Association, we do not find that the petitioner's domestic like product definition is inconsistent with this statutory definition. While both parties have cited to various cases involving agricultural and other products, in light of the information presented in the petition, we have concluded that there is no basis on which to reject as clearly inaccurate the petitioners' representations that there are no clear dividing lines, in terms of characteristics or uses, between dressed and cut salmon. Therefore, we have adopted the single domestic like product definition set forth in the petition.

Having found that dressed and cut salmon constitute a single like product, we considered the Association's arguments that U.S. production of salmon cuts had not been accounted for in the petition's demonstration of industry support. The calculation of the standing ratio in the petition was based on a comparison of the volume of the petitioners' total 1996 production of dressed salmon to the volume of the industry's total 1996 production of dressed salmon. We have revised the petitioner's industry support calculations to add to the total U.S. domestic industry figure an amount representing the estimated economic value of U.S. fillet processing, in order to be as conservative as possible in our evaluation of industry support. In so doing, we have conservatively assumed that none of this processing industry has affirmatively supported the petition.

In order to factor fillet processing into our analysis, we used a value-based analysis. We determined that the calculation of industry support on the basis of weight is inappropriate because the further processing of dressed salmon into cuts involves significant weight yield loss. In this regard, we note that the Statement of Administrative Action (SAA) for the URAA explicitly provides that the Department may determine the existence of industry support based on the value of production. SAA at 862. For further explanation of our inclusion of salmon processing in the total U.S. domestic industry figure, which served as the denominator in the industry support calculation, see the Initiation Checklist prepared for this case, dated July 1, 1997.

Having accounted for U.S. production of salmon cuts, we find that the production data provided in the petition indicate that the petitioners account for more than 50 percent of the total production of the domestic like product, thus meeting the requirements of section 702(c)(4)(A) of the Act. Since the petitioners exceed the industry support threshold, we have not taken the letters of opposition that were filed with the Association's June 27, 1997, submission into account in our determination of industry support.

Injury Test

Because Chile is a ''Subsidies Agreement Country'' within the meaning of section 701(b) of the Act, Title VII of the Act applies to this investigation. Accordingly, the U.S. International Trade Commission (''ITC'') must determine whether imports of the subject merchandise from Chile materially injure, or threaten material injury to, a U.S. industry.

Allegation of Subsidies

Section 702(b) of the Act requires the Department to initiate a countervailing duty proceeding whenever an interested party files a petition, on behalf of an industry, that (1) alleges the elements necessary for an imposition of a duty under section 701(a), and (2) is accompanied by information reasonably available to petitioners supporting the allegations.

Initiation of Countervailing Duty Investigations

The Department has examined the petition on fresh Atlantic salmon (''salmon'') from Chile and found that it complies with the requirements of section 702(b) of the Act. Therefore, in accordance with section 702(b) of the Act, we are initiating a countervailing duty investigation to determine whether producers or exporters of salmon from Chile receive subsidies.

We are including in our investigation the following programs alleged in the petition to have provided subsidies to producers of the subject merchandise in Chile:

1. Fundacion Chile Assistance
   a. Company Start Up Projects
   b. Provision of Salmon Infrastructure
   c. Technology Support Measures
2. Institute for Technological Research (INTEC)
3. Fund for Technological and Productive Development (FONTEC) Grants
4. Central Bank Chapter 19 (Debt Conversion Program)
5. Central Bank Chapter 18 (Debt Conversion Program)
6. ProChile Export Promotion Assistance
7. Export Promotion Fund
8. Chilean Production Development Corporation (CORFO) Export Credit Insurance Program
9. CORFO Export Credits and Long-Term Export Financing
10. Law No. 18,439 (Export Credit Limits)
11. GOC Guarantee of Private Bank Loans
12. Law No. 18,449 (Stamp Tax Exemption)
13. Law No. 18,634 (Deferred and/or Waived Import Duties on Capital Goods)
14. Import Substitution of Capital Goods
15. Import Substitution for New Industries
16. Tax Deductions Available to Exporters
17. Law No. 18,392 (Tax Exemptions)
18. Article 59 of Decree Law 824 (Chilean Income Tax Law)
19. Decree 15 (Promotion and Development Fund)

We are not including in our investigation the following programs alleged to be benefitting producers and exporters of the subject merchandise in Chile:

1. Decree Law No. 825 (VAT Rebates for Goods Necessary for Exporting)

Petitioners allege that Decree Law No. 825 allows exporters to recover the 18 percent VAT tax paid on domestic transactions associated with export activities. Exporters may either receive the tax benefit in the form of a fiscal credit deductible from the tax charged on their local sales, or as the cash equivalent of the VAT tax actually paid. Petitioners assert that because the Department initiated an investigation of this program in Standard Carnations from Chile (''Carnations''), 52 FR 3313 (February 3, 1987), the Department should investigate whether salmon exporters received VAT rebates during the POI that extended to inputs that were not consumed in the production of the export product.

We determined this program to be not countervailable in Carnations. Further, petitioners have provided no basis to believe or suspect that the program currently provides excessive rebates. On this basis, we are not including this program in our investigation.

2. Law No. 18,708 (Duty Drawback)

Petitioners allege that Law No. 18,708 provides drawback of custom duties paid on imported inputs incorporated into the production of exported final goods. Petitioners assert that we should investigate this program because in Carnations, we determined the Law No. 18,480 Simplified Duty Drawback program to be countervailable because it allowed for excessive drawback of duties. Based on this finding, petitioners argue the GOC has a practice of remitting excessive import duties.

We do not consider duty drawback on inputs consumed in the production of exported products to be countervailable subsidies. Petitioners have provided no basis for us to believe or suspect that the duty drawback under Law No. 18,708 is

excessive. On this basis, we are not including this program in our investigation.

3. Tariff Abatement for New Companies

Petitioners allege that the GOC provides a tariff abatement of up to 80 percent to firms that move their machinery to Chile to continue operations there. Petitioners assert that this abatement constitutes an import substitution subsidy. However, petitioners have not explained how this tariff abatement promotes the use of domestic over imported goods. On this basis, we are not including this program in our investigation.

4. Law No. 18,645 Loan Guarantees

Petitioners allege that Law No. 18,645 provides loan guarantees to exporters of non-traditional goods who typically have less access to ordinary commercial financing. The program provides guarantees of up to 50 percent of the exporter's loans and the loans may not exceed $150,000. Petitioners state that although the program guarantees financing at market rates and a fee is charged for the guarantees, the terms of the guarantees are inconsistent with commercial considerations because they allow exporters to obtain financing sooner and more easily then they otherwise could.

Petitioners speculate that the fees paid for Law No. 18,645 loan guarantees are preferential but provide no information in this respect. Further, regarding the allegation that exporters are able to receive loans more easily and sooner as a result of this program, petitioners have failed to allege any benefit by reason of loans obtained on non-commercial terms. On this basis, we are not including this program in our investigation.

5. Currency Retention Scheme

Petitioners allege that exporters are limited in their use of the foreign exchange they earn from export activities because the Central Bank requires them to repatriate their foreign exchange earnings to commercial banks within a designated period. However, the GOC allows certain exporters to waive this rule if they have export-oriented investment projects that require the repayment of foreign suppliers or financial credits of over one year with special authorization from the Central Bank. This program was investigated in Carnations and found not used.

The International Monetary Fund's Exchange Arrangements and Exchange Restrictions Annual Report on Chile states that as of June 16, 1995, exporters were no longer required to repatriate export proceeds to the Central Bank. Given the elimination of the repatriation requirement, exemptions from the requirement cease to have meaning. (We note that petitioners based their allegation on the IMF's 1991 Annual Report.) On this basis, we are not including this program in our investigation.

6. Law No. 18,480 (Simplified Duty Drawback)

Petitioners allege that Law No. 18,480, enacted in 1985, allows certain exporters a duty drawback of up to 10 percent of the FOB value of their exports representing import duties paid on imported inputs used to produce non-traditional exports. Petitioners also assert that another provision of the law entitles exporters that are using domestically-produced inputs in their export operations an amount of duty drawback that the exporter would otherwise realize if they had imported the inputs. Petitioners allege although this program was amended to exclude salmon, the program should be investigated given that the exclusion of salmon was recent.

Included in the information provided by the GOC during its consultations with the Department were copies of Decrees 102 (dated March 27, 1991) and 123 (dated March 14, 1997). These decrees clearly state that as of December 31, 1990, Atlantic salmon was excluded from the duty drawback provided by Law No. 18,480. On this basis, we are not including this program in our investigation.

7. VAT Rebates for Fixed Assets

Petitioners allege that exporters may recover the VAT paid on fixed assets after a designated waiting period of six months from the date of purchase. They claim that the program is available only to exporters in that the rebate is limited to acquisitions incurred in the preproduction phase of export operations.

Petitioners have provided no information to indicate that the VAT rebates are in any way excessive or that they are provided only to exporters. On this basis, we are not including this program in our investigation.

8. Exemption From Prior Deposit Requirements

Petitioners allege that the Central Bank grants companies producing exclusively for export a complete exemption from prior-deposit requirements of import taxes on new and used components.

Information provided by the GOC during its consultations with the Department included a copy of section 88 of Law 18,840, which states that under no circumstances may prior deposits be required for the execution of export or import transactions. On this basis, we are not including this program in our investigation.

9. Decree Law No. 889 (Tax Credits)

Petitioners allege that Decree Law No. 889 provides tax credits to ''non-traditional'' enterprises located in Region I (far north), XI (Rio Palena to south of O'Higgins) and XII (Cape Horn) regions. Eligible enterprises receive a subsidy equal to 17 percent of the employees' taxable income, up to a maximum of 60,000 pesos.

Evidence presented in the petition reveals that this program was terminated after December 31, 1992. Further, petitioners have not provided a sufficient basis for us to believe or suspect that the Tax Credits program remains in existence. On this basis, we are not including this program in our investigation.

Distribution of Copies of the Petition

In accordance with section 702(b)(4)(A) of the Act, a copy of the public version of the petition has been provided to the representatives of Chile. We will attempt to provide copies of the public version of the petition to all the exporters named in the petition.

ITC Notification

We have notified the ITC of our initiation of this investigation as required by section 702(d) of the Act.

Preliminary Determination by the ITC

The ITC will determine by July 28, 1997, whether there is a reasonable indication that imports of fresh Atlantic salmon from Chile are causing material injury, or threatening to cause material injury, to a U.S. industry. A negative ITC determination will result in termination of the investigation; otherwise, the investigation will proceed according to statutory and regulatory time limits.

This notice is published pursuant to 702(c)(2) of the Act.

Dated: July 2, 1997.

Joseph A. Spetrini,

Acting Assistant Secretary for Import Administration.

[FR Doc. 97–17951 Filed 7–8–97; 8:45 am]

BILLING CODE 3510–DS–P

DEPARTMENT OF COMMERCE

National Oceanic and Atmospheric Administration

[I.D. 063097F]

North Pacific Fishery Management Council; Committee Meeting

AGENCY: National Marine Fisheries Service (NMFS), National Oceanic and Atmospheric Administration (NOAA), Commerce.

ACTION: Notice of public meeting of the Alaska Board of Fisheries/North Pacific Fishery Management Council joint committee.

SUMMARY: Representatives of the North Pacific Fishery Management Council and the Alaska Board of Fisheries will meet in Anchorage, AK.

DATES: The meeting will be held July 21–22, 1997, beginning at 9:00 a.m. on July 21.

ADDRESSES: The meeting will be held in Room 219 of the Old Federal Building, 605 W. 4th Avenue, Anchorage, AK.

Council address: North Pacific Fishery Management Council, 605 W. 4th Ave., Suite 306, Anchorage, AK 99501–2252.

FOR FURTHER INFORMATION CONTACT: Clarence Pautzke, Phone: 907–271–2809.

SUPPLEMENTARY INFORMATION: The committee will review the joint protocol previously adopted by both bodies and determine how it can be best implemented. Other topics on the agenda will include halibut management in local areas, state waters groundfish fisheries, crab pot-groundfish trawler preemption, shoreside regulations for improved retention and utilization of groundfish, and review of proposals for state waters management. Other items of mutual interest, such as scallop and crab management, will be added as appropriate.

Special Accommodations

The meeting is physically accessible to people with disabilities. Requests for sign language interpretation or other auxiliary aids should be directed to Helen Allen, 907–271–2809, at least 5 working days prior to the meeting date.

Dated: July 1, 1997.

Gary C. Matlock,

Director, Office of Sustainable Fisheries, National Marine Fisheries Service.

[FR Doc. 97–17920 Filed 7-8-97; 8:45 am]

BILLING CODE 3510–22–F

DEPARTMENT OF COMMERCE

National Oceanic and Atmospheric Administration

[I.D. 070297A]

Western Pacific Fishery Management Council; Public Meeting

AGENCY: National Marine Fisheries Service (NMFS), National Oceanic and Atmospheric Administration (NOAA), Commerce.

ACTION: Notice of public meeting.

SUMMARY: The Western Pacific Fishery Management Council's (Council) Hawaii Crustaceans Plan Team (HI–CPT) members will hold a meeting.

DATES: The meeting will be held July 31, 1997, from 8:30 a.m. to 5:00 p.m.

ADDRESSES: The meeting will be held at the Executive Centre Hotel, Room 306, 1088 Bishop Street, Honolulu, HI; telephone: (808) 539–3000.

Council address: Western Pacific Fishery Management Council, 1164 Bishop Street, Suite 1405, Honolulu, HI 96813.

FOR FURTHER INFORMATION CONTACT: Kitty M. Simonds, Executive Director; telephone: (808) 522–8220.

SUPPLEMENTARY INFORMATION: The HI-CPT will discuss and may make recommendations to the Council on the following agenda items:

1. Revisions to the Crustaceans Fishery Management Plan (FMP) through amendments, arising from the re-authorization of the Magnuson-Stevens Act;

2. NMFS annual lobster research cruise in the Northwestern Hawaiian Islands (NWHI);

3. NWHI 1997 lobster fishing season, including the data observer program and Vessel Monitoring System to transmit data and report catch;

4. Possible inconsistencies between Hawaii State and Federal lobster fishing regulations;

5. Areas of the region not included in the FMP; and

6. Other business as required.

Special Accommodations

This meeting is physically accessible to people with disabilities. Requests for sign language interpretation or other auxiliary aids should be directed to Kitty M. Simonds, (808) 522–8220 (voice) or (808) 522–8226 (fax), at least 5 days prior to the meeting date.

Dated: July 1, 1997.

Bruce C. Morehead,

Acting Director, Office of Sustainable Fisheries, National Marine Fisheries Service.

[FR Doc. 97–17913 Filed 7–8–97; 8:45 am]

BILLING CODE 3510–22–F

DEPARTMENT OF COMMERCE

National Oceanic and Atmospheric Administration

[I.D. 063097E]

Western Pacific Fishery Management Council; Public Meeting

AGENCY: National Marine Fisheries Service (NMFS), National Oceanic and Atmospheric Administration (NOAA), Commerce.

ACTION: Notice of public meeting.

SUMMARY: The Western Pacific Fishery Management Council's (Council) Pelagics Plan Team (PT) and Hawaii and American Samoa Pelagics Advisory Panel (AP) members will hold a joint meeting.

DATES: The meeting will be held July 30–31, 1997, from 8:30 a.m. to 5:00 p.m., each day.

ADDRESSES: The meeting will be held at the Ala Moana Hotel, Ilima Room, 410 Atkinson Drive, Honolulu, HI; telephone: (808) 955 4811.

Council address: Western Pacific Fishery Management Council, 1164 Bishop St., Suite 1405, Honolulu, HI 96813.

FOR FURTHER INFORMATION CONTACT: Kitty M. Simonds, Executive Director; telephone: (808) 522–8220.

SUPPLEMENTARY INFORMATION: The joint PT/AP will discuss and may make recommendations to the Council on the following agenda items:

1. Bycatch in the Hawaii-based longline fishery (turtles, sharks, albatross);

2. Revisions to the Pelagic Fisheries Management Plan and amendments arising from the re-authorization of the Magnuson Act;

3. Management issues for the emergent longline fishery in American Samoa;

4. Pelagic small boat working groups in American Samoa and Northern Mariana Islands

5. Pelagic fisheries and marine mammal interactions;

6. Hawaii akule and opelu fisheries;

7. Second multilateral high level conference on management of tuna in the Western and Central Pacific Ocean; and

8. Other business as required.

Special Accommodations

This meeting is physically accessible to people with disabilities. Requests for sign language interpretation or other auxiliary aids should be directed to Kitty M. Simonds, 808–522–8220 (voice) or 808–522–8226 (fax), at least 5 days prior to meeting date.

Dated: July 1, 1997.

Gary C. Matlock,

Director, Office of Sustainable Fisheries, National Marine Fisheries Service.

[FR Doc. 97–17917 Filed 7-8-97; 8:45 am]

BILLING CODE 3510–22–F

DEPARTMENT OF COMMERCE

National Oceanic and Atmospheric Administration

[I.D. 062797D]

Western Pacific Fishery Management Council; Public Meeting

AGENCY: National Marine Fisheries Service (NMFS), National Oceanic and Atmospheric Administration (NOAA), Commerce.

ACTION: Notice of public meeting.

SUMMARY: The Western Pacific Fishery Management Council will hold a joint meeting of its Bottomfish Task Force, Hawaii Plan Team, and Hawaii Advisory Panel.

DATES: The meeting will be held on July 28, 1997, from 8:30 a.m. to 5:00 p.m.

ADDRESSES: The meeting will be held at the Ala Moana Hotel, 410 Atkinson Dr., Plumeria Room, Honolulu, HI; telephone: (808) 955–4811.

Council address: Western Pacific Fishery Management Council, 1164 Bishop St., Suite 1400, Honolulu, HI 96813.

FOR FURTHER INFORMATION CONTACT: Kitty M. Simonds, Executive Director; telephone: (808) 522–8220.

SUPPLEMENTARY INFORMATION: The Bottomfish Task Force, Hawaii Plan Team, and Hawaii Advisory Panel will review a draft amendment for the Mau Zone bottomfish fishery limited entry program in the Northwestern Hawaiian Islands. The group will consider permit renewal criteria, indigenous fishing practices, and other elements to the limited entry program. The group will also review the 1996 bottomfish annual report and address new Magnuson-Stevens Act requirements including: Essential Fish Habitat, overfishing, bycatch, communities and fishing sectors and consider other business as required.

Special Accommodations

This meeting is physically accessible to people with disabilities. Requests for sign language interpretation or other auxiliary aids should be directed to Kitty M. Simonds, 808–522–8220 (voice) or 808–522–8226 (fax), at least 5 days prior to meeting date.

Dated: July 1, 1997.

Gary C. Matlock,

Director, Office of Sustainable Fisheries, National Marine Fisheries Service.

[FR Doc. 97–17919 Filed 7-8-97; 8:45 am]

BILLING CODE 3510–22–F

DEPARTMENT OF DEFENSE

Department of the Air Force

Notice of Intent To Prepare a Supplemental Environmental Impact Statement for Disposal and Reuse of Airfield at Griffiss Air Force Base, NY

The United States Air Force is issuing this notice to advise the public it will prepare a supplement to an existing Environmental Impact Statement (EIS), ''Final EIS, Disposal and Reuse of Griffiss AFB, New York, November 1995,'' which was prepared in accordance with the 1993 Base Closure Commission's recommendation. These recommendations included the retention of several Air Force and DOD functions at the base, including the continued operation of the airfield at a minimum level to support the U.S. Army 10th Infantry Light Division at Fort Drum, New York.

In 1995, a newly appointed Base Closure Commission reevaluated the 1993 Base Closure Commission's decision, recommending closure of the airfield as it was determined that the airfield at Fort Drum could meet the needs of the U.S. Army's 10th Infantry Light Division. The Air Force will fulfill its responsibilities under the National Environmental Policy Act (NEPA) by preparing a supplement to the existing EIS. The Supplemental EIS will address the potential environmental impacts of disposing of the property to public or private entities. All reasonable alternatives, including the no-action alternative (defined as closure of the airfield, but without property disposal taking place), will be examined. It will also examine possible cumulative effects of proposed reuse in concert with disposal proposals under the 1993 disposal EIS.

A scoping meeting will be held in Rome, New York, on July 29, 1997, starting at 5:00 p.m. It will be held at the Plumley Complex Auditorium, Mohawk Valley Community College-Rome Campus, on Floyd Avenue. It provides a forum for public officials and the community to provide the Air Force with information and comments. It also assists the Air Force in identifying issues that need to be assessed and discussed in the Supplemental EIS. The Air Force will discuss the proposal to dispose of the airfield at Griffiss Air Force Base, describe the Supplemental EIS process, and ask for help in identifying alternative uses for the airfield and any significant environmental impacts that may result from its disposal. In soliciting alternatives, the Air Force will consider all reasonable alternatives offered by any federal, state, or local government agency, or any federally-sponsored or private entity or individual. The overall scoping process will extend to September 30, 1997. The resulting Final Supplemental EIS will be considered in making disposal decision, if any, that will be documented in the Air Force's Record of Decision.

To ensure sufficient time to adequately consider public comments concerning environmental issues and alternatives to be included in the Supplemental EIS, the Air Force recommends comments and reuse proposals be presented at the upcoming scoping meeting or forwarded to the address listed below at the earliest possible date. The Air Force will, however, accept additional comments at any time during the environmental impact analysis process.

Please direct written comments or requests for further information concerning the Supplemental EIS for disposal and reuse of the airfield at Griffiss Air Force Base to: Jonathan D. Farthing, HQ AFCEE/ECA, 3207 North Road, Brooks Air Force Base, Texas 78235–5363, (210) 536–5649.

Barbara A. Carmichael,

Air Force Federal Register Liaison Officer.

[FR Doc. 97–17855 Filed 7–8–97; 8:45 am]

BILLING CODE 3910–01–U

DEPARTMENT OF DEFENSE

Department of the Air Force

Performance Review Boards List of 1997 Members

Below is a list of additional individuals who are eligible to serve on the Performance Review Boards for the Department of the Air Force in accordance with the Air Force Senior Executive Appraisal and Awards System.

Secretariat

Mr. Walker Lee Evey
Brig Gen Wilfred Hessert
Ms. Cathlyn B. Sparks

Air Staff and "Others"

Lt Gen William P. Hallin
Mr. Allen W. Beckett
Ms. Susan A. O'Neal

Air Force Materiel Command

Lt Gen Stewart E. Cranston
Brig Gen Robert J. Courter, Jr.
Dr. Joseph F. Janni

Barbara A. Carmichael,

Air Force Federal Register Liaison Officer.

[FR Doc. 97–17890 Filed 7–8–97; 8:45 am]

BILLING CODE 3910–01–P

DEPARTMENT OF DEFENSE

Department of the Army

Availability of U.S. Patents for Non-Exclusive, Exclusive, or Partially-Exclusive Licensing

AGENCY: U.S. Army Research Laboratory, Adelphi, Maryland.

ACTION: Notice.

SUMMARY: In accordance with 37 CFR 404.6, announcement is made of the availability of the following U.S. patents for non-exclusive, partially exclusive or exclusive licensing. All of the listed patents have been assigned to the United States of America as represented by the Secretary of the Army, Washington, D.C.

These patents cover a wide variety of technical arts including *(1) Eliminating Undesirable Reflections from Optical Systems (2) Composite Structures for Transmitting High Shear Loads (3) A Ceramic Ferroelectric Material Having a High Dielectric Constant (4) A Ceramic Ferroelectric Material Having a Low Dielectric Constant,* as well as many other different technical arts.

Under the authority of Section 11(a)(2) of the Federal Technology Transfer Act of 1986 (Pub. L. 99–502) and Section 207 of Title 35, United States Code, the Department of the Army as represented by the U.S. Army Research Laboratory wish to license the U.S. patents listed below in a non-exclusive, exclusive or partially exclusive manner to any party interested in manufacturing, using, and/or selling devices or processes covered by these patents.

Title: Technique for Eliminating Undesirable Reflections From Optical Systems.
Inventor: Thomas J. Gleason.
Patent Number: 5,629,492.
Issue Date: May 13, 1997.

Title: Composite Structure for Transmitting High Shear Loads.
Inventor(s): Travis A. Bogetti and Christopher P.R. Hoppel.
Patent Number: 5,635,272.
Issue Date: June 3, 1997.

Title: Ceramic Ferroelectric Composite Material-BSTO-ZNO.
Inventor: Louise Sengupta.
Patent Number: 5,635,433.
Issue Date: June 3, 1997.

Title: Ceramic Ferroelectric Composite Material-BSTO-Magnesium Based Compound.
Inventor: Louise Sengupta.
Patent Number: 5,635,434.
Issue Date: June 3, 1997.

FOR FURTHER INFORMATION CONTACT: Ms. Norma Vaught, Technology Transfer Office, AMSRL–CS–TT, U.S. Army Research Laboratory, Adelphi, MD 20783–1197; tel: (301) 394–2952; fax: (301) 394–5815; e-mail: nvaught@arl.mil.

SUPPLEMENTARY INFORMATION: None.

Gregory D. Showalter,

Army Federal Register Liaison Officer.

[FR Doc. 97–17904 Filed 7–8–97 8:45 am]

BILLING CODE 3710–08–M

DEPARTMENT OF DEFENSE

Department of the Army

Availability of U.S. Patents for Non-Exclusive, Exclusive, or Partially-Exclusive Licensing

AGENCY: U.S. Army Research Laboratory, Adelphi, Maryland.

ACTION: Notice.

SUMMARY: In accordance with 37 CFR 404.6, announcement is made of the availability of the following U.S. patents for non-exclusive, partially exclusive or exclusive licensing. All of the listed patents have been assigned to the United States of America as represented by the Secretary of the Army, Washington, D.C.

These patents cover a wide variety of technical arts including *(1) An Optical Waveguide Based on the Talbot Effect (2) A Technique to Mitigate Groove Drag in KE Projectiles (3) An Ammunition Primer and Tool Holder,* as well as many other different technical arts.

Under the authority of Section 11(a)(2) of the Federal Technology Transfer Act of 1986 (Pub. L. 99–502) and Section 207 of Title 35, United States Code, the Department of the Army as represented by the U.S. Army Research Laboratory wish to license the U.S. patents listed below in a non-exclusive, exclusive or partially exclusive manner to any party interested in manufacturing, using, and/or selling devices or processes covered by these patents.

Title: Easily Manufacturable Optical Self-Imaging Waveguide.
Inventor: Tristan Tayag.
Patent Number: 5,640,474.
Issue Date: June 17, 1997.

Title: Groove Drag Mitigation.
Inventor(s): James M. Garner and Harris L. Edge.
Patent Number: 5,639,985.
Issue Date: June 17, 1997.

Title: Holder for Primers and Tools.
Inventor: Jim A. Faughn.
Patent Number: 5,639,983.
Issue Date: June 17, 1997.

FOR FURTHER INFORMATION CONTACT: Ms. Norma Vaught, Technology Transfer Office, AMSRL–CS–TT, U.S. Army Research Laboratory, Adelphi, MD 20783–1197; tel: (301) 394–2952; fax: (301) 394–5815; e-mail: nvaught@arl.mil.

SUPPLEMENTARY INFORMATION: None.

Gregory D. Showalter,

Army Federal Register Liaison Officer.

[FR Doc. 97–17903 FIled 7–8–97; 8:45 am]

BILLING CODE 3710–08–M

DEPARTMENT OF DEFENSE

Department of the Army

Corps of Engineers

Inland Waterways Users Board

AGENCY: U.S. Army Corps of Engineers, DoD.

ACTION: Notice of request for nominations.

SUMMARY: Section 302 of Public Law (Pub. L.) 99–662 established the Inland Waterways Users Board. The Board is an independent Federal advisory committee. Its 11 members are appointed by the Secretary of the Army. This notice is to solicit nominations for five (5) appointments or reappointments to two-year terms that will begin January 1, 1998.

ADDRESSES: Office of the Assistant Secretary of the Army (Civil Works), Department of the Army, Washington, D.C. 20310–0103. Attention: Inland Waterways Users Board Nominations Committee.

FOR FURTHER INFORMATION CONTACT: Dr. John H. Zirschky, Acting Assistant Secretary of the Army (Civil Works) (703) 697–4671.

SUPPLEMENTARY INFORMATION: The selection, service, and appointment of

Board members are covered by provisions of Section 302 of Public Law 99–662. The substance of those provisions is as follows:

a. Selection

Members are to be selected from the spectrum of commercial carriers and shippers using the inland and intracoastal waterways, to represent geographical regions, and to be representative of waterborne commerce as determined by commodity ton-miles statistics.

b. Service

The Board is required to meet at least semi-annually to develop and make recommendations to the Secretary of the Army on waterways construction and rehabilitation priorities and spending levels for commercial navigation improvements, and report its recommendations annually to the Secretary and Congress.

c. Appointment

The operation of the Board and appointment of its members are subject to the Federal Advisory Committee Act (PL 92–463, as amended) and departmental implementing regulations. Members serve without compensation but their expenses due to Board activities are reimbursable. The considerations specified in section 302 for the selection of the Board members, and certain terms used therein, have been interpreted, supplemented, or otherwise clarified as follows:

(1) Carriers and Shippers

The law uses the terms ''primary users and shippers.'' Primary users has been interpreted to mean the providers of transportation services on inland waterways such as barge or towboat operators. Shippers have been interpreted to mean the purchasers of such services for the movement of commodities they own or control. Individuals are appointed to the Board, but they must be either a carrier or shipper, or represent a firm that is a carrier or shipper. For that purpose a trade or regional association is neither a shipper or primary user.

(2) Geographical Representation

The law specifies ''various'' regions. For the purpose of selecting Board members, the waterways subjected to fuel taxes and described in PL 95–502, as amended, have been aggregated into six regions. They are (1) the Upper Mississippi River and its tributaries above the mouth of the Ohio; (2) the Lower Mississippi River and its tributaries below the mouth of the Ohio and above Baton Rouge; (3) the Ohio River and its tributaries; (4) the Gulf Intracoastal Waterway in Louisiana and Texas; (5) the Gulf Intracoastal Waterway east of New Orleans and associated fuel-taxed waterways including the Tennessee-Tombigbee, plus the Atlantic Intracoastal Waterway below Norfolk; and (6) the Columbia-Snake Rivers System and Upper Willamette. The intent is that each region shall be presented by at least one Board member, with that representation determined by the regional concentration of the individual's traffic on the waterways.

(3) Commodity Representation

Waterway commerce has been aggregated into six commodity categories based on ''inland'' ton-miles shown in Waterborne Commerce of the United States. In rank order they are (1) Farm and Food Products; (2) Coal and Coke; (3) Petroleum, Crude and Products; (4) Minerals, Ores, and Primary Metals and Mineral Products; (5) Chemicals and Allied Products; and (6) All other. A consideration in the selection of Board members will be that the commodities carried or shipped by those individuals or their firms will be reasonably representative of the above commodity categories.

d. Nomination

Reflecting preceding selection criteria, the current representation by the five (5) Board members whose terms expire December 31, 1997, is as follows: one member representing the Upper Mississippi River (Region 1), two members representing the Lower Mississippi River (Region 2), one member representing the Ohio River (Region 3), and one member representing the Giww-East of New Orleans, Tenn-Tombigbee, and AIWW below Norfolk (Region 5). Also, these Board members represent two shippers and three carriers.

Three (3) of the five members whose terms expire December 31, 1997, are eligible for reappointment.

Nominations to replace Board members whose terms expire December 31, 1997, may be made by individuals, firms or associations. Nominations will:

(1) State the region to be represented;

(2) State whether the nominee is representing carriers, shippers or both;

(3) Provide information on the nominee's personal qualifications;

(4) Include the commercial operations of the carrier and/or shipper with whom the nominee is affiliated. This commercial operations information will show the actual or estimated ton-miles of each commodity carried or shipped on the inland waterways system in a recent year (or years) using the waterway regions and commodity categories previously listed.

Nominations received in response to last year's **Federal Register** notice, published on July 10, 1996, have been retained for consideration. Renomination is not required but may be desirable.

Deadline for Nomination

All nominations must be received at the address shown above no later than August 31, 1996.

Gregory D. Showalter,

Army Federal Register Liaison Officer.

[FR Doc. 97–17916 Filed 7–8 –97; 8:45 am]

BILLING CODE 3710–92–M

DEPARTMENT OF DEFENSE

Department of the Army

Corps of Engineers

Intent To Prepare an Environmental Impact Statement (EIS) for the Evaluation of Proposed Placement of Dredged Material at Site 104, Chesapeake Bay, Queen Anne's County, MD

AGENCY: U.S. Army Corps of Engineers, DoD.

ACTION: Notice of intent.

SUMMARY: Pursuant to Sections 313 and 404 of the Clean Water Act of 1977 (33 USC 1323 and 1344), the Baltimore District, U.S. Army Corps of Engineers will evaluate the placement of dredged material at Site 104, Chesapeake Bay, Queen Anne's County, Maryland. Pursuant to Section 102 of the National Environmental Policy Act, the Baltimore District will prepare an Environmental Impact Statement (EIS) for Evaluation of the Proposed Placement of Dredged Material at Site 104, Chesapeake Bay, Queen Anne's County, Maryland. The dredged material to be placed at Site 104 would be clean material from Federal navigation channels in the main stem of the Chesapeake Bay leading to Baltimore Harbor and the Port of Baltimore. Site 104 is located in the main stem of the Chesapeake Bay, north of the William Preston Lane Jr. Memorial Bridge, and west of Kent Island and encompasses approximately 1,800 acres. The Section 404 Evaluation will investigate the use of alternative placement equipment and methods for the placement of approximately 18 million cubic yards of additional dredged material in the deepest part of the site. To facilitate the Evaluation, the Baltimore District will also prepare and

circulate an Environmental Impact Statement (EIS) evaluating the suitability of Site 104 for placement of dredged material. The EIS will include descriptions of the existing site conditions, dredged material placement alternatives, probable impacts of dredged material placement, public involvement, and the recommended determination and/or activity. The scheduled completed date for the draft Section 404 Evaluation and EIS for the Proposed Placement of Dredged Material at Site 404, Chesapeake Bay, Queen Anne's County, Maryland is early 1998.

FOR FURTHER INFORMATION CONTACT: Questions about the proposed action and EIS can be addressed to Mr. Mark Mendelsohn, U.S. Army Corps of Engineers, ATTN: CENAB–PL–PC (104), P.O. Box 1715, Baltimore, MD 21203–1715, telephone 410–962–9499. E–Mail address: mark.mendelsohn@ccmail.nab.usace.army.mil

SUPPLEMENTARY INFORMATION:

1. Site 104 is located in the main stem of the Chesapeake Bay, north of the William Preston Lane Jr. Memorial Bridge, and west of Kent Island. The site was used for dredged material placement during a period of approximately 50 years, beginning in 1924 and ending in 1975. The original placement area extended 2.7 nautical miles, from its northern boundary northwest of Love Point (Kent Island), in a south southwestward direction along a natural deep channel of the Bay to a position due east of the Sandy Point Light. The southern boundaries of the site were extended twice to increase the length by about 1½ miles and the southern 1.1 nautical miles of the site were widened by approximately 1,000 feet, increasing the total acreage to approximately 1,800 acres. Records for the period are not complete, but suggest that during the thirty-year period ending in 1975 more than 70 million cubic yards of dredged material were placed at the site. These dredged sediments resulted from widening and deepening the project channels (at least 44 million cubic yards) and from maintenance dredging of the authorized channels (at least 26 million cubic yards).

2. The proposed open-water placement would use clean dredged material removed from Federal navigation channels in the main stem of the Chesapeake Bay leading to Baltimore Harbor and the Port of Baltimore. The specific channels to be dredged are Craighill Entrance, Craighill Channel, Craighill Upper Range, Cutoff Angle, Brewerton Channel Eastern Extension, Swan Point Channel, Tolchester Channel, and the Approach Channel to the C&D Canal. Placement of approximately 18 million cubic yards would fill the deepest parts of the site to a depth of 45 feet MLLW.

3. Because different dredging and placement methods might carry significantly different water quality impacts, the Baltimore District will evaluate alternative dredged material placement equipment and methods. Information on the alternatives will be analyzed, a recommended placement plan formulated, and the results presented in the Section 404 Evaluation and the EIS. The District will prepare and circulate a draft EIS (DEIS) evaluating the suitability of Site 104 for placement of dredged material. The EIS will include descriptions of the existing site conditions, dredged material placement alternatives, probable impacts of dredged material placement, public involvement, and the recommended determination and/or activity.

4. The decision on the suitability of the proposed site for placement of clean dredged material described in this public notice will be based on an evaluation of the probable impact of the proposed activity on the public interest. The decision will reflect the national concern for the protection and utilization of important resources. The benefit which may reasonably be expected to accrue from the proposal must be balanced against its reasonably foreseeable detriments. All factors which may be relevant to the proposal will be considered; among these are conservation, economics, aesthetics, energy needs, general environmental concerns, fish and wildlife values, historic values, navigation, water quality, recreation, safety, food production, and in general, the needs and welfare of the people. Site 104 will not be found suitable for open-water placement of clean dredged material unless it's found to be in the public interest.

5. As part of the EIS public involvement process, the Baltimore District is conducting a scoping process to identify issues and areas of concern. Any person who has interest in the proposed placement of dredged material at Site 104, or who may be adversely affected by the proposed placement activity, may make comments or suggestions or request a public hearing. A series of three public meetings has been scheduled whereat concerned persons may comment or make suggestions. The time and dates for the three meetings are given below:

a. July 15, 1997 at 7:00 pm—Kent County Court House, Commissioners Hearing Room—First Floor, 103 North Cross Street, Chestertown, Maryland 21620.

b. July 17, 1997 at 7:00 pm—Queen Anne's County Office Building, Second Floor Meeting Room, 208 North Commerce Street, Centreville, Maryland 21617.

c. July 22, 1997 at 7:00 pm—Broadneck High School, 1265 Green Holly Drive, Annapolis, Maryland 21401.

6. Please communicate the foregoing information concerning the proposed work to any person known by you to be interested and, not being known to this office, does not receive a copy of this notice.

Gregory D. Showalter,

Army Federal Register Liaison Officer.

[FR Doc. 97–17923 Filed 7–8–97; 8:45 am]

BILLING CODE 3710–41–M

DEPARTMENT OF DEFENSE

Department of the Army

Corps of Engineers

Intent To Prepare a Draft Supplement III to the Final Environmental Impact Statement (FEIS) for the Manteo (Shallowbag) Bay Project, Dare County, NC

AGENCY: U.S. Army Corps of Engineers, DoD.

ACTION: Notice of Intent.

SUMMARY: The navigation improvements being proposed are necessary to provide safe and reliable navigation through Oregon Inlet and are essentially the same as those previously coordinated, consisting of twin jetties at Oregon Inlet (with sand bypassing) and improvements to navigation channels to Wanchese, North Carolina. Supplement III will discuss recent changes in the design of the project and present refined impact analyses, which have been conducted since the circulation of Supplement II in 1985. On February 27, 1991, the NOI to prepare the Draft Supplement III to thee FEIS appeared in the **Federal Register**. Due to funding and scheduling problems, the Draft Supplement III to the FEIS was not prepared at the time.

FOR FURTHER INFORMATION CONTACT: Questions about the proposed action and Draft Supplement III to the FEIS can be answered by: Mr. William F. Adams, Environmental Resources Section; U.S. Army Engineer District, Wilmington; Post Office Box 1890; Wilmington,

North Carolina 28402–1890; telephone: (910) 251–4748.

SUPPLEMENTARY INFORMATION: The Manteo (Shallowbag) Bay project was authorized in Public Law 91–611 (HD 303/91/2), December 31, 1970. The FEIS on the project was filed with EPA on April 20, 1979. The first Supplement to the FEIS was filed on November 7, 1980, and Supplement II to the FEIS was filed on July 5, 1985.

1. The proposed project includes a dual jetty system at Oregon Inlet with sand bypassing. The jetties will be parallel, approximately 3,500 feet apart, with the north jetty being approximately 11,450 feet long (4,000 feet comprising a shore anchorage section) and the south jetty being approximately 7,575 feet long (3,125 feet which consists of a terminal groin constructed by the North Carolina Department of Transportation in 1991). Navigation channels will also be improved. The ocean bar channel will be deepened from its current depth of 14 feet to 20 feet at the existing width of 400 feet. The channels from Oregon Inlet to Wanchese, North Carolina, will be deepened and widened from their current dimensions of 12 feet deep and 100 feet wide to 14 feet deep and 120 feet wide.

2. Alternatives to the project are variations in jetty design, alternative spacings, dredging the improved channel dimensions without the jetties, and no action (maintain existing navigation channel at current dimensions). Due to the difficulty in maintaining the existing navigation channel through the inlet, improving the channels without the jetties is considered to be impractical.

3. Scoping for this project is ongoing. The scoping letter will be mailed to all known parties concurrent with the NOI. Other parties wishing to comment on this project are invited to do so at this time.

a. Significant issues to be discussed in the upcoming supplement are information on potential impacts of the project on navigation, larval fish and shellfish migration through Oregon Inlet, cultural resources, endangered species, littoral sand transport, submerged aquatic vegetation, aesthetics, recreation, and future economic development of the region.

b. The Department of the Interior is working with the Corps on the final design of the project.

c. Additional coordination on endangered species and cultural resources is being undertaken during the final design of the project. The U.S. Fish and Wildlife Service is preparing a Fish and Wildlife Coordination Act report. Results of these coordination efforts will be included in Supplement III.

4. Because of the long history of this project, no formal scoping meetings are planned at this time. Responses to the scoping letter or this notice may result in coordination with individuals or agencies on an as needed basis to discuss certain issues.

5. The Draft Supplement III to the FEIS is currently scheduled to be available in January 1998.

Gregory D. Showalter,

Army Federal Register Liaison Officer.

[FR Doc. 97–17912 Filed 7–8–97; 8:45 am]

BILLING CODE 3710–GN–M

DEPARTMENT OF DEFENSE

Department of the Army

Corps of Engineers

Intent To Prepare a Joint Draft Supplemental Environmental Impact Statement for a Proposed Navigation Improvement Project at Maalaea Harbor, Maui, Hawaii (Second SEIS for This Project)

AGENCY: U.S. Army Corps of Engineers. DoD.

ACTION: Notice of Intent.

SUMMARY: The U.S. Army Corps of Engineers Honolulu District in partnership with the State of Hawaii, Department of Transportation, is proposing to improve the light draft harbor at Maalaea, Maui, Hawaii, by enlarging the turning basin, changing the location of the entrance channel and constructing a new protective breakwater. In addition, revetted moles would be added: (a) to the existing south breakwater to provide for vehicle turn-around; (b) to the existing east breakwater for berthing; and (c) a new center mole for berthing and fueling. The State of Hawaii would add new berths and other infrastructure improvements. The improvements are needed to expand the capacity of the harbor and to reduce damage from storm waves to boats at the existing berths. The completed project is expected to significantly reduce vessel damage, and to allow an increase of berths from about 90 to up to approximately 220.

FOR FURTHER INFORMATION CONTACT: Mr. William B. Lennan, U.S. Army Engineer District, Honolulu, Attention: CEPOD–ET–PP, Fort Shafter, Hawaii 96858–5440, or phone (808) 438–2264.

SUPPLEMENTARY INFORMATION:

1. The complete project is expected to include the following items:

a. an extension to the existing south breakwater 620 feet long;

b. the addition of a revetted mole 400 feet long on the seaward side of the existing south breakwater for bus turn around;

c. a new entrance channel, 610 feet long, varying in width from 150 to 180 feet, and varying in depth from 12 to 18 feet;

d. a 1.7 acre turning basin;

e. removal of 80 feet of the existing east breakwater;

f. an interior revetted mole and a revetted mole and berthing area 8 feet deep adjacent to the existing east breakwater;

g. parking, water, electricity, fuel and restroom facilities;

h. an increase in berthing capacity of up to approximately 130 berths.

2. Alternatives include ''No Action'' and various alternative alignments and configurations of the entrance channel and breakwater.

3. The Corps and the State of Hawaii conducted a complete public involvement program for their final EISs circulated in 1980 and 1982 as well as for the first joint Supplemental Environmental Impact Statement (SEIS) circulated in 1994. Formal consultation under Section 7 of the Endangered Species Act has been completed with the National Marine Fisheries Service and the U.S. Fish and Wildlife Service for species under their jurisdiction, and coordination with the State Historic Preservation Officer has been completed. The supplemental EIS Will address new mitigation developed and minor changes to the project since the 1994 SEIS was circulated. In response to comments received on the 1994 SEIS, this second SEIS will provide a detailed assessment of the potential impacts of implementing alternative 6, which was eliminated from detailed analysis in the 1994 SEIS. Alternative 6, also called the interior mole alternative, includes construction of an internal breakwater to reduce wave activity within the harbor.

4. The draft supplemental EIS is expected to be available in November 1997.

Gregory D. Showalter,

Army Federal Register Liaison Officer.

[FR Doc. 97–17915 Filed 7–8–97; 8:45 am]

BILLING CODE 3710–NN–M

DEPARTMENT OF DEFENSE

Department of the Navy

Community Redevelopment Authority and Available Surplus Buildings and Land at Military Installations Designated for Closure: Naval Air Station, Barbers Point, Oahu, Hawaii

SUMMARY: This notice provides information regarding (a) the local redevelopment authority that has been established to plan the reuse of the Naval Air Station, Barbers Point, HI, (b) amend total amount of surplus property that is located at that base closure site, and (c) the timely election by the local redevelopment authority to proceed under new procedures set forth in the Base Closure Community Redevelopment and Homeless Assistance Act of 1994.

FOR FURTHER INFORMATION CONTACT: John J. Kane, Director, Department of the Navy, Real Estate Operations, Naval Facilities Engineering Command, 200 Stovall Street, Alexandria, VA 22332–2300, telephone (703) 428–0436, or J. M. Kilian, Director, Real Estate Division, Pacific Division, Naval Facilities Engineering Command, Pearl Harbor, HI 96860–7300, telephone (808) 471–3217. For more detailed information regarding particular properties identified in this Notice (i.e. acreage, floor plan, sanitary facilities, exact street address, etc.), contact Mr. Dennis Yamamoto, Deputy Staff Civil Engineer, Naval Air Station, Barbers Point, HI 96862–5050, telephone (808) 684–8201.

SUPPLEMENTARY INFORMATION: In 1993, the Naval Air Station, Barbers Point was designated for closure pursuant to the Defense Base Closure and Realignment Act of 1990, Public Law 101–510, as amended. Pursuant to this designation, in October 1995, approximately 2,146.9 acres of land and related facilities at this installation were on declared surplus to the federal government and available for use by (a) non-federal public agencies pursuant to various statutes which authorize conveyance of property for public projects, and (b) homeless provider groups pursuant to the Stewart B. McKinney Homeless Assistance Act (42 U.S.C. 11411), as amended. On June 17, 1997, a second determination was made that additional land and facilities at this installation are surplus to the federal government.

Notice of Surplus Property

Pursuant to paragraph (7)(B) of Section 2905(b) of the Defense Base Closure and Realignment Act of 1990, as amended by the Base Closure Community Redevelopment and Homeless Assistance Act of 1994, the following information regarding the redevelopment authority for and surplus property at the Naval Air Station, Barbers Point, Oahu, HI is published in the **Federal Register**.

Redevelopment Authority

The local redevelopment authority for the Naval Air Station, Barbers Point, HI, for purposes of implementing the provisions of the Defense Base Closure and Realignment Act of 1990, as amended, is the Barbers Point Naval Air Station Redevelopment Commission. The Barbers Point Naval Air Station Redevelopment Commission was created by the Hawaii State Legislature to implement the redevelopment of the Air Station. A cross section of community interests is represented on the Commission. Day to day operations of the Commission are handled by an Executive Director. The address of the local redevelopment authority is Barbers Point Naval Air Station Redevelopment Commission, P.O. Box 2359, Honolulu, Hawaii 96804. Telephone (808) 587–2843, facsimile (808) 587–2843 or (808) 587–2899.

Surplus Property Descriptions

The following is a listing of the additional land and facilities at the Naval Air Station, Barbers Point that are declared surplus to the federal government.

Land

Approximately 5.7 acres of improved and unimproved fee simple land at the Naval Air Station, Barbers Point, on the island of Oahu, State of Hawaii. In general, all areas will be available upon the closure of air station anticipated for July 1999.

Buildings

The following is a summary of the facilities located on the above described land which will also be available when the station closes in July 1999. Property numbers are available on request.

—Office/administration building; Comments: Approx. 17,530 square feet; Paved areas. Comments: Includes roads, sidewalks, and parking areas; Utilities. Comments: Telephone exchange, telephone, electric, water, and sewage utility systems on the property.

Election to Proceed Under New Statutory Procedures

Section 2 of the Base Closure Community Redevelopment and Homeless Assistance Act of 1994 (Pub. L. 103–421) gives the local redevelopment authority at base closure sites the option of proceeding under new procedures with regard to the manner in which the redevelopment plan for the base is formulated and how requests are made for future use of the property by homeless assistance providers and non-federal public agencies. On December 2, 1994, the Governor of Hawaii submitted a timely request to proceed under the new procedures. Accordingly, this notice fulfills the **Federal Register** publication requirement of Section 2(e)(3) of the Base Closure Community Redevelopment and Homeless Assistance Act of 1994 in so far as the additional surplus land and facilities are concerned.

Expressions of Interest

Pursuant to paragraph 7(C) of Section 2905(b) of the Defense Base Closure and Realignment Act of 1990, as amended by the Base Closure Community Redevelopment and Homeless Assistance Act of 1994, State and local governments, representatives of the homeless, and other interested parties located in the vicinity of the Naval Air Station, Barbers Point, shall submit to the said local redevelopment authority (Barbers Point Naval Air Station Redevelopment Commission) a notice of interest, of such governments, representatives and parties in the above described additional surplus property, or any portion thereof. A notice of interest shall describe the need of the government, representative, or party concerned for the desired surplus property. Pursuant paragraphs 7 (C) and (D) of said Section 2905(b), the redevelopment authority shall assist interested parties in evaluating the surplus property for the intended use and publish in a newspaper of general circulation in Hawaii the date by which expressions of interest must be submitted.

Dated: July 2, 1997.

D.E. Koenig, Jr.,

LCDR, JAGC, USN, Alternate Federal Register Liaison Officer.

[FR Doc. 97–17899 Filed 7–8–97; 8:45 am]

BILLING CODE 3810–FF–P

DEPARTMENT OF DEFENSE

Department of the Navy

Community Redevelopment Authority and Available Surplus Buildings and Land at Military Installations Designated for Closure: Palos Verdes Housing, Los Angeles, California

SUMMARY: This notice provides information regarding (a) the local

redevelopment authority that has been established to plan the reuse of the Palos Verdes Navy Housing, Los Angeles, California, and (b) the surplus property that is located at that base closure site.

FOR FURTHER INFORMATION CONTACT: John J. Kane, Director, Department of the Navy, Real Estate Operations, Naval Facilities Engineering Command, 200 Stovall Street, Alexandria, VA 22332–2300, telephone (703) 428–0436, or Ms. Kimberly Ostrowski, Deputy Base Closure Manager, Southwest Division, Naval Facilities Engineering Command, 1420 Kettner Blvd., Suite 501, San Diego, CA 92101–2404, telephone (619) 532–2004, extension 15. For more detailed information regarding particular properties identified in this Notice (i.e., acreage, floor plans, sanitary facilities, exact street address, building numbers, etc.), contact LCDR Tony DiDominico, Caretaker Site Officer, Naval Shipyard, Long Beach, CA, telephone (562) 980–2720.

SUPPLEMENTARY INFORMATION: In 1995, the Palos Verdes Navy Housing, Los Angeles, California, was designated for closure pursuant to the Defense Base Closure and Realignment Act of 1990, Public Law 101–510, as amended. Pursuant to this designation land and facilities at this installation that were not requested by other DoD or federal agencies, are hereby declared surplus to the federal government and available for use by (a) non-federal public agencies pursuant to various statutes which authorize conveyance of property for public projects, and (b) homeless assistance providers pursuant to the Base Closure Community Redevelopment and Homeless Assistance Act of 1994.

Notice of Surplus Property

This notice is being published pursuant to the requirements of Section 2905(b)(7)(B) of the Defense Base Closure and Realignment Act of 1990, as amended. Information regarding the redevelopment authority for and the surplus property at the Palos Verdes Navy Housing, Los Angeles, CA, is as follows:

Redevelopment Authority

The redevelopment authority for the Palos Verdes Navy Housing, Los Angeles, CA, for purposes of implementing the provisions of the Defense Base Closure and Realignment Act of 1990, as amended, is the city of Los Angeles. Day-to-day operations of the local redevelopment authority are handled by Ms. Merryl Edelstein. The address is Los Angeles City Planning Department, Community Planning Bureau, 221 S. Figueroa Street, Room 310, Los Angeles, CA 90012, telephone (213) 485–4170, facsimile (213) 485–8005.

Surplus Property Descriptions

The following is a listing of the land and facilities at the Palos Verdes Navy Housing, Los Angeles, CA, that are hereby being declared surplus to the federal government.

Land

Approximately 62 acres of improved and unimproved land in the city of Los Angeles, Los Angeles County. This property will be available upon the closure of the housing area, anticipated for 1 October, 1997.

Buildings

The following is a summary of the facilities located on the above described land which will also be available on 1 October 1997.

—Family housing buildings (37 quadplexes, and 25 sixplexes); 62 buildings providing housing for 298 families; approx. 629,693 square feet.
—Paved areas; roads, parking areas, sidewalks, etc.; approx. 45,364 square yards.
—Recreational facilities (26 structures); basketball and tennis courts, playgrounds and picnic areas.
—Utility facilities; water, sanitary sewer, electrical distribution lines, storm drainage system, perimeter fence/wall and gas mains.

Expressions of Interest

Pursuant to Section 2905(b)(7)(C) of the Defense Base Closure and Realignment Act of 1990, as amended, state and local governments, representatives of the homeless, and other interested parties located in the vicinity of the Palos Verdes Navy Housing, Los Angeles, CA, shall submit to the said redevelopment authority a notice of interest in the above described surplus property, or any portion thereof. A notice of interest shall describe the need of the government, representative, or party concerned for the desired surplus property. Pursuant to Section 2905(b)(7) (C) and (D), the redevelopment authority shall assist interested parties in evaluating the surplus property for the intended use and publish in a newspaper of general circulation the date by which expressions of interest must be submitted. In accordance with Section 2905(b)(7)(D) of said Base Closure Community Redevelopment and Homeless Assistance Act of 1994, the submission date established by the redevelopment authority shall be no earlier than three months and not later than six months after the date of recognition of the redevelopment agency by the Department of Defense.

Dated: July 2, 1997.

D.E. Koenig, Jr.,

LCDR, JAGC, USN, Federal Register Liaison Officer.

[FR Doc. 97–17900 Filed 7–8–97; 8:45 am]

BILLING CODE 3810–FF–P

DEPARTMENT OF DEFENSE

Department of the Navy

Community Redevelopment Authority and Available Surplus Buildings and Land at Military Installations Designated for Closure: San Pedro Housing, Los Angeles, CA

SUMMARY: This Notice provides information regarding (a) the local redevelopment authority that has been established to plan the reuse of the San Pedro Navy Housing, Los Angeles, California, and (b) the surplus property that is located at that base closure site.

FOR FURTHER INFORMATION CONTACT: John J. Kane, Director, Department of the Navy, Real Estate Operations, Naval Facilities Engineering Command, 200 Stovall Street, Alexandria, VA 22332–2300, telephone (703) 428–0436, or Ms. Kimberly Ostrowski, Deputy Base Closure Manager, Southwest Division, Naval Facilities Engineering Command, 1420 Kettner Blvd., Suite 501, San Diego, CA 92101–2404, telephone (619) 532–2004, extension 15. For more detailed information regarding particular properties identified in this Notice (i.e., acreage, floor plans, sanitary facilities, exact street address, building numbers, etc.), contact LCDR Tony DiDomenico, Caretaker Site Officer, Naval Shipyard, Long Beach, California, telephone (562) 980–2720.

SUPPLEMENTARY INFORMATION: In 1995, the San Pedro Navy Housing Los Angeles, CA, was designated for closure pursuant to the Defense Base Closure and Realignment Act of 1990, Public Law 101–510, as amended. Pursuant to this designation land and facilities at this installation are hereby declared surplus to the federal government and available for use by (a) non-federal public agencies pursuant to various statutes which authorize conveyance of property for public projects, and (b) homeless assistance providers pursuant to the Base Closure Community Redevelopment and Homeless Assistance Act of 1994.

Notice of Surplus Property

This notice is being published pursuant to the requirements of Section 2905(b)(7)(B) of the Defense Base Closure and Realignment Act of 1990, as amended. Information regarding the redevelopment authority for and the surplus property at the San Pedro Navy Housing, Los Angeles, CA is as follows:

Redevelopment Authority

The redevelopment authority for the San Pedro Navy Housing, Los Angeles, CA, for purposes of implementing the provisions of the Defense Base Closure and Realignment Act of 1990, as amended, is the City of Los Angeles. Day-to-day operations of the local redevelopment authority are handled by Ms. Merryl Edelstein. The address is Los Angeles City Planning Department, Community Planning Bureau, 221 S. Figueroa Street, Room 310, Los Angeles, CA 90012, telephone (213) 485–4170, facsimile (213) 485–8005.

Surplus Property Descriptions

The following is a listing of the land and facilities at the San Pedro Navy Housing, Los Angeles, CA, that are hereby declared surplus to the federal government.

Land

Approximately 62 acres of improved and unimproved land in the City of Los Angeles, Los Angeles County. This property will be available upon the closure of the housing area, anticipated for 1 October 1997.

Buildings

The following is a summary of the facilities located on the above described land which will also be available on 1 October 1997.

—Community/youth center; approx. 2,164 square feet.
—Family housing buildings (1 single-family house and 122 duplexes); 123 buildings providing housing for 245 families; approx. 398,024 square feet.
—Paved areas; roads, parking areas, sidewalks, basketball court, etc.; approx. 53,571 square yards.
—Retail store; approx. 3,454 square feet.
—Utility facilities (6 structures); water, sanitary sewer, septic tank, storm drainage system, and interior fences.

Expressions of Interest

Pursuant to Section 2905(b)(7)(C) of the Defense Base Closure and Realignment Act of 1990, as amended, state and local governments, representatives of the homeless, and other interested parties located in the vicinity of the San Pedro Navy Housing, Los Angeles, CA, shall submit to the said redevelopment authority a notice of interest in the above described surplus property, or any portion thereof. A notice of interest shall describe the need of the government, representative, or party concerned for the desired surplus property. Pursuant to Section 2905 (b)(7) (C) and (D), the redevelopment authority shall assist interested parties in evaluating the surplus property for the intended use and publish in a newspaper of general circulation the date by which notices of interest must be submitted. In accordance with Section 2905(b)(7)(D) of said Base Closure Community Redevelopment and Homeless Assistance Act of 1994, the submission date established by the redevelopment authority shall be no earlier that three months and not later than six months after the date of recognition of the redevelopment agency by the Department of Defense.

Dated: July 2, 1997.

D.E. Koenig, Jr.,

LCDR, JAGC, USN, Alternate Federal Register Liaison Officer.

[FR Doc. 97–17902 Filed 7–8–97; 8:45 am]

BILLING CODE 3810–FF–U

DEPARTMENT OF DEFENSE

Department of the Navy

Notice of Availability of Addendum to the Final Environmental Impact Statement for Realignment of Marine Corps Base, Camp LeJeune, NC

SUMMARY: The Department of the Navy (DON) has prepared an Addendum to the Final Environmental Impact Statement for the Expansion and Realignment of Marine Corps Base, Camp Lejeune, North Carolina, which provides updated information concerning the environmental impacts associated with the establishment of special use airspace restrictions over the Greater Sandy Run Area (GSRA), Camp Lejeune. DON solicits public participation and written comment on the Addendum. The comment period will close on August 11, 1997.

ADDENDUM INFORMATION: Pursuant to § 102(2) of the National Environmental Policy Act (NEPA) of 1969 and the Council on Environmental Quality (CEQ) regulations implementing NEPA procedures (40 CFR §§ 1500–1508), DON prepared and published a Final Environmental Impact Statement (FEIS) analyzing the impacts associated with the proposal to expand and realign Marine Corps Base, Camp Lejeune, North Carolina. This expansion was accomplished in 1992 via the purchase of 41,000 plus acres known as the Greater Sandy Run Area (GSRA).

The FEIS addressed special use airspace restrictions to be placed over the GSRA. The Department of the Navy decided to publish this Addendum to the Final Environmental Impact Statement to further address the environmental concerns and impacts on current land uses from the establishment of approximately 50 square miles of special use airspace over the GSRA. Although use of an addendum to an FEIS is neither required by NEPA nor directed by CEQ Regulations, DON determined that this addendum will serve as a vehicle for a more thorough discussion of matters relating to the establishment of a special use airspace over the GSRA, and will thereby further the purposes of NEPA. The addendum is intended to provide the public with notification of this information. The addendum incorporates the Draft and Final Environmental Impact Statements. The addendum provides updated information concerning environmental impacts, but not information that is so significant as to require a supplemental environmental impact statement. As the addendum does not present new circumstances or new information relevant to significant environmental impacts of the proposed action or alternatives, it is not intended as a supplement to the Final Environmental Impact Statement, as defined in § 1502.9(c) of the CEQ Regulations.

The majority of the information contained in the Addendum is taken from reports, studies and analyses referenced in the FEIS. The Addendum clarifies and updates information concerning the cumulative effects analysis used in the FEIS, provides the second part of a two part noise study referenced in the FEIS, and provides the public with an opportunity to review and comment on this information. An outline of the issues addressed in the Addendum is set out below.

Outline

A. Information on Proposal To Establish Special Use Airspace
B. Explanation of Independent Utility of GSRA Restricted Airspace
C. Description of the Existing Land Uses and Classifications in and near the GSRA
D. Noise Sensitive Areas That May Be Overflown
  1. Maps
  2. Within the GSRA
  3. Off-site
E. Wildlife and Wildlife Areas
F. Noise Impacts from Aircraft
G. Summary of Consistency Determination
H. Cumulative Effects Analysis
  1. Finality
  2. Update

3. Additional Quantitative Noise Analysis
4. Quantitative Noise Analysis for the Core and Cherry I MOAs

I. MCAS New River Instrument Landing System.

J. Camp Davis Operations

K. Environmental Justice In Minority Populations and Low-Income Populations

FOR FURTHER INFORMATION OR TO OBTAIN A COPY OF THE ADDENDUM: Contact Major Craig Jensen at (910) 451–9517. Written comments should be sent to Major Craig Jensen, Eastern Area Counsel Office, 67 Virginia Dare Dr., Suite 206, Camp Lejeune, NC 28547, and must be received by 4:00 pm, August 11, 1997.

Dated: July 3, 1997.

D.E. Koenig, Jr.,

LCDR, JAGC, USN, Alternate Federal Register Liaision Officer.

[FR Doc. 97–17943 Filed 7–8–97; 8:45 am]

BILLING CODE 3810–FF–P

DEPARTMENT OF DEFENSE

Department of the Navy

Record of Decision for the Disposal and Reuse of Naval Base Philadelphia, Pennsylvania

SUMMARY: The Department of the Navy (Navy), pursuant to Section 102(2)(C) of the National environmental Policy Act of 1969 (NEPA), 42 U.S.C. 4321 *et seq.*, and the regulations of the Council on Environmental Quality that implement NEPA procedures, 40 CFR Parts 1500–1508, hereby announces its decision to dispose of Naval Base Philadelphia, Pennsylvania. The Naval Base property is composed of Naval Station Philadelphia and the Philadelphia Naval Shipyard.

Navy intends to dispose of the property in a manner that is consistent with the Community Reuse Plan for the Philadelphia Naval Base and Shipyard (''Reuse Plan'') submitted on November 22, 1994, by the City of Philadelphia, the Local Redevelopment Authority (LRA) for the Naval Base. The Reuse Plan proposes a mix of industrial, commercial, educational, research and development, residential, warehousing, intermodal transportation and open space uses of the property.

In its Final Environmental Impact Statement (FEIS), Navy evaluated a ''No action'' alternative and three ''action'' alternatives: the Reuse Plan, described in the FEIS as the preferred alternative; the Mustin Field Retail Alternative; and the Mustin Field Natural Area Alternative.

In deciding to dispose of the Naval Base, Navy has determined that the Reuse Plan will meet the goals of achieving local economic redevelopment of the closing facilities and creating new jobs, while limiting adverse environmental impacts and ensuring land uses that are compatible with adjacent property. This Record Of Decision leaves selection of the particular means to achieve the proposed redevelopment to the acquiring entity and the local zoning authority.

BACKGROUND: The 1991 Defense Base Closure and Realignment Commission recommended closure of the Naval Station and the Capehart Housing that was associated with the Naval Base. The 1991 Commission also recommended closure and preservation of the Naval Shipyard for emergent requirements and retention of the Naval Foundry and Propeller Center, the Naval Inactive Ships Maintenance Facility, and the Naval Surface Warfare Center's (Carderock Division) Ship Systems Engineering Station. Theses recommendations were approved by President Bush and accepted by the One Hundred Second Congress in 1991.

The 1995 Defense Base Closure and Realignment Commission modified the 1991 Commission's recommendation by eliminating the direction to preserve the Naval Shipyard for emergent requirements. The 1995 Commission's recommendation was approved by President Clinton and accepted by the One Hundred Fourth Congress in 1995.

Navy will also retain at the Naval Base certain other support activities, including a Detachment of Public Works Center Norfolk, the League Island Branch Clinic of National Naval Medical Center Bethesda, and a Detachment of the Fleet and Industrial Supply Center Norfolk. The designated Naval activities closed in September 1996, and the property has been in caretaker status since that date.

The Naval Base is located at the confluence of the Delaware and Schuylkill Rivers on League Island, four miles south of the central business district of the City of Philadelphia. All of the Naval Base properties are situated on League Island except the Capehart Housing, which is located one mile northwest of the Naval Base.

The Naval Base occupies about 1,500 acres on League Island, and the nearby Capehart Housing is situated on about 28 acres of land. There are approximately 545 structures containing more than 11 million square feet of floor space at the Naval Base. The western half of the Base is more developed and contains facilities associated with the maintenance and production operations of the Naval Shipyard as well as five drydocks. The eastern half is less developed and contains the inactive Mustin Field that served the former Naval Aircraft Factory.

Administrative and support facilities, the Bachelor Enlisted Quarters and Officers' and the Reserve Basin where inactive Naval vessels are moored occupy the center of the Base. The property north of the Reserve Basin contains warehouses, the brig, industrial support facilities, the fire fighting school, and open storage areas. Senior Officers' houses are located along the Delaware River waterfront east of the pier area.

Navy published a Notice of Intent in the **Federal Register** on December 28, 1994, announcing that Navy would prepare an Environmental Impact Statement that would analyze the impacts of disposal and reuse of the land, buildings and infrastructure at the Naval Base. A thirty-day public scoping period was established, and Navy held a public scoping meeting on January 11, 1995, at the South Philadelphia Community Center.

On January 30, 1996, Navy distributed a Draft Environmental Impact Statement (DEIS) to Federal, State and local agencies, interested parties and the general public. Navy held a public hearing at the South Philadelphia Community Center on February 15, 1996, to discuss the DEIS. During the forty-five day review period after publication of the DEIS, Federal, State, and local agencies submitted written comments concerning the DEIS. These comments and Navy's responses were incorporated in the Final Environmental Impact Statement, which was distributed to the public on June 21, 1996, for a thirty-day review period that concluded on July 22, 1996. Navy received comments on the FEIS from the Department of the Interior, two Pennsylvania State agencies, Health Alternatives International, Inc., the Philadelphia International Development Group, and one individual.

ALTERNATIVES: NEPA requires Navy to evaluate a reasonable range of alternatives for the disposal and reuse of this Federal property. In the NEPA process, Navy analyzed the environmental impacts of various proposed land uses that would result from disposal of the Naval Base property. Navy also evaluated a ''No action'' alternative that would leave the property in a caretaker status with Navy maintaining the physical condition of the property, providing a security force and making repairs essential to safety.

Navy relied upon the land uses described in the Reuse Plan as the basis

for its analysis of the preferred ''action'' alternative, which proposed a medium intensity development of the Base. Navy developed and analyzed two other ''action'' alternatives characterized by high and low intensity development scenarios.

The first ''action'' alternative, the Reuse Plan, divides the Naval Base property into five areas. First, the Shipyard, located in the western part of the Naval Base, would serve as the core area for manufacturing and heavy industrial activities. The western end of the Shipyard, containing Drydocks 3, 4, and 5 and associated buildings, would be redeveloped as a private shipyard with controlled public access. The eastern end of the Shipyard, containing Drydocks 1 and 2, would be redeveloped to permit those industrial activities that require contact with the public.

Second, the League Island Center, located east of the Shipyard area between Broad Street and Mustin Field, would support a mix of land uses including administrative and educational, research and development, commercial and recreational and light industrial activities. The uses in this area would include administrative and professional offices, educational institutions, light industrial activities associated with research, bed and breakfast lodging, and restaurants.

Third, the Girard Point Industrial Park, located in the northwestern part of the Naval Base, would support the property's industrial activities by providing facilities for storage and large scale distribution of materials.

Fourth, the East End Commerce Park, located at the eastern end of the Naval Base on the former Mustin Field, would support a mix of land uses including transportation, light and heavy industrial operations, research and development, and recreational activities. These uses could include an intermodal railyard, warehousing, a waterfront esplanade, and passive recreation spaces.

Fifth, the 400-unit Capehart Housing property, located about one mile northwest of the Naval Base, would be converted to private, market rate housing. After redevelopment, these houses would be sold. The net proceeds from the sale would be used to capitalize a Rental Assistance Endowment Fund that would provide rental assistance and other support services to the City's homeless assistance providers.

The second ''action'' alternative, the Mustin Field Retail Alternative, proposed a high intensity reuse of the Naval Base. Redevelopment of the Shipyard, League Island Center, Girard Point Industrial Park and Capehart Housing would proceed as proposed in the Reuse Plan, but the eastern end of the Naval Base would be redeveloped differently. A commercial services zone featuring a regional shopping complex would be developed on about 300 acres at Mustin Field. This complex would be composed of a retail mall with approximately two million square feet of space, specialty stores and restaurants, an entertainment complex, warehouses, and centrally located parking and access facilities.

The third ''action'' alternative, the Mustin Field Natural Area Alternative, proposed a lower intensity reuse of the Naval Base. As in the second alternative, redevelopment of the Shipyard, League Island Center, Girard Point Industrial Park and Capehart Housing would proceed as proposed in the Reuse Plan, but the eastern end of the Naval Base would remain undeveloped. The concrete runways of Mustin Field would be allowed to deteriorate naturally, and existing vegetation would be permitted to grow with little or no maintenance. The enlisted family housing along the Delaware River at the eastern end of the Naval Base would be demolished. The Mustin Field Natural Area Alternative also proposed a recreational zone consisting of a waterfront visitors' center and esplanade along the Delaware River. This Natural Area would be fenced to prevent illegal dumping and other inappropriate uses.

ENVIRONMENTAL IMPACTS: Navy analyzed the potential impacts of the ''No action'' and three ''action'' alternatives for their effects on land use compatibility, socioeconomics, public services, transportation, air quality, noise, cultural resources, natural resources, and generation of hazardous materials. This Record Of Decision focuses on the impacts that would likely result from implementation of the Reuse Plan.

The Reuse Plan's proposed use of land would be consistent and compatible with the existing uses of adjacent land in South Philadelphia, because the area around the Naval base contains primarily industrial activities. The Reuse Plan's proposal for redevelopment of the Capehart Housing would not have any adverse impact, because this property would continue to be used for housing.

The Reuse Plan would not result in any significant adverse socioeconomic impacts. Indeed, the Plan forecasts new direct employment opportunities in the range of 15,700 jobs and secondary employment of more than 20,000 jobs. The Reuse Plan projects that, at full build-out, the property will generate wage tax revenues of about $21.5 million and real property tax revenues of about $19.2 million.

Under the Reuse Plan, the City will sell the Capehart Housing on the open market. The release of these housing units could have an adverse impact on real estate property values in South Philadelphia. Thus, to mitigate this impact, the City will develop a phased marketing plan that would not cause a decrease in property values in the surrounding neighborhoods.

The Reuse Plan would not cause any significant adverse impact on community services. It will be necessary to expand the service area for South Philadelphia emergency and medical service providers, but the response times will remain within five to ten minutes.

Implementation of the Reuse Plan would generate an increase in traffic. There would be 10,395 more peak morning trips and 12,417 more peak afternoon trips than would be expected under the ''No action'' alternative. Additionally, the Plan would have various impacts on traffic in the surrounding roadway network during commuting periods.

In response, the City has proposed to change traffic patterns for the following intersections: Interstate Highway 95 (North) at Broad Street; Interstate Highway 95 (South) as Broad Street; and Penrose Avenue at 26th Street. The City has also proposed to build two new access points to the Naval Base at Christopher Columbus Boulevard and at Darien Street. Nevertheless, the intersection of Interstate Highway 95 and Broad Street and the intersection of Packer Avenue and Darien Street would experience significant increased traffic that will require roadway improvements beyond those already identified by the City.

The Reuse Plan would not result in any significant impacts to air quality. As a result of the projected increase in traffic, carbon monoxide levels would be higher from activities in the Reuse Plan that in the ''No action'' alternative. There would not, however, be any violations of the one-hour and eight-hour National Ambient Air Quality Standards for carbon monoxide.

There would not be any significant impacts from noise. The existing noise levels on the property are dominated by industrial activities. The existing noise levels in nearby residential and recreational areas are high and typical of urban neighborhoods. While the Reuse Plan would slightly increase noise levels along Pattison Avenue at

Roosevelt Park and along parts of Broad Street during peak traffic hours, most areas would experience noise increases that would be barely perceptible. Measured against the levels identified as acceptable in Section 10–400 of the Philadelphia Municipal Code, the noise levels generated by the Reuse Plan are not significant.

There are two historic districts that are eligible for listing on the National Register of Historic places. These two districts are located in the western part of the Naval Base. The Reuse Plan would adversely affect buildings in this historic districts. Accordingly, on March 23, 1997, Navy, the Pennsylvania State Historic Preservation Officer, and the Advisory Council on Historic Preservation entered into a Programmatic Agreement (PA) concerning these structures. The PA establishes a framework for applying restrictive covenants that require consultation between the owner of the Naval Base property and the Pennsylvania State Historic Preservation Officer before demolition or alteration of historic buildings and structures and before alteration of the historic districts. The City of Philadelphia concurred with this Agreement on April 8, 1997.

No significant impact on biological resources would result from the Reuse Plan. The Naval Base has been fully developed, and few natural features remain. While some vegetative areas would be lost in the redevelopment, the habitat loss is not unique to the Naval Base and can readily be found elsewhere along the Delaware River.

There are two endangered species that are listed on the Federal endangered species list and present at the Naval Base. A pair of peregrine falcons nest in the Interstate Highway 95 bridge that crosses the Naval Base, and the shortnose sturgeon has been observed in the Delaware River. Navy has informally consulted with the United States Fish & Wildlife Service and will place a Notice in the conveyance document that describes actions recommended by the Department of the Interior to minimize impacts to the nesting falcons. Similarly, Navy will place a Notice in the conveyance document that the shortnose sturgeon may be present in the Delaware River.

The eastern end of the Naval Base contains about 26 acres of freshwater wetlands. The Reuse Plan's proposed construction of an intermodal railyard, industrial facilities, and warehouses may disturb or eliminate these wetlands. Thus, the acquiring entity will be required to obtain permits from the United States Army Corps of Engineers and the Pennsylvania Department of Environmental Protection in accordance with Section 404 of the Federal Water Pollution Control Act (FWPCA), 33 U.S.C. 1344, and from the Pennsylvania Department of Environmental Protection in accordance with the Regulations Governing Dam Safety and Water Management, 25 Pa. Code Section 105 *et seq.* The stringent requirements of these laws should provide adequate mitigation for the loss of wetlands.

About 90 percent of the Naval Base property lies within the 100-year floodplain. The remaining 10 percent lies between the 100-year and 500-year floodplains. Therefore, any construction arising out of implementation of the Reuse Plan would likely affect the floodplain. Much of the Naval Base is already developed with waterfront industrial uses that have been active for more than 100 years. Nevertheless, in accordance with Executive Order 11988, Floodplain Management, dated May 24, 1977, Navy will place a Notice in the conveyance document that describes those uses that are restricted under Federal, State, and local floodplain regulations.

Implementation of the Reuse Plan would not result in any significant impacts on surface waters. All new construction and any alteration of land must conform to the treatment and runoff control requirements of the Pennsylvania Department of Environmental Protection as set forth at 25 Pa. Code Section 102.4. Additionally, under FWPCA, 33 U.S.C. 1251 *et seq.*, any new source of wastewater discharge would be required to comply with the National Pollutant Discharge Elimination System Program.

Historically, large quantities of hazardous waste were generated at the Naval Base. As a consequence, fifteen Installation Restoration sites have been established and are undergoing study or cleanup. Navy is responsible for remediating these sites. Other hazardous waste cleanup and remediation actions, including the closure or removal of underground storage tanks, abatement of friable and accessible asbestos, and removal of PCB transformers, are also underway throughout the Naval Base.

No significant adverse impacts would be caused by the hazardous materials and hazardous waste that may be generated by the Reuse Plan. Those Navy activities that will remain on the Naval Base will generate less hazardous substances than when the Shipyard was fully operational. The nature and amount of hazardous waste that would result from implementation of the Reuse Plan depends upon the nature and extent of future redevelopment at the Naval Base. Those whose use hazardous materials will be subject to inspection by the Philadelphia Fire Department in accordance with the Worker and Community Right-to-Know Act. 35 P.S. Section 7312, and will be required to submit information concerning their use of hazardous materials by the Pennsylvania Department of Environmental Protection's regulations, set forth at 34 Pa. Code Section 301 *et seq*.

Navy also analyzed the impacts on low-income and minority populations pursuant to Executive Order 12898, Federal Actions to Address Environmental Justice in Minority Populations and Low-Income Populations, reprinted in 42 U.S.C. 4321 note. There would be no disproportionately high and adverse human health or environmental effects on minority and low income populations. All groups would experience equally any impact related to reuse of the Navy Base property within the regional population.

MITIGATION: Implementation of Navy's decision to dispose of the Naval Base does not require Navy to perform any mitigation measures. The FEIS identified and discussed the actions that would be necessary to mitigate impacts associated with reuse and redevelopment. The acquiring entity, under the direction of Federal, State and local agencies with regulatory authority over protected resources, will be responsible for implementing necessary mitigation measures. The historic property will be protected by the use of restrictive covenants in the deed conveying the property.

COMMENTS RECEIVED ON THE FEIS: In response to the FEIS, Navy received comments from the United States Department of the Interior, the Pennsylvania Game Commission, the Pennsylvania Human Relations Commission, Health Alternatives International, Inc., the Philadelphia International Development Group, and one private citizen.

The Department of the Interior expressed concern about the protection of wetlands, loss of habitat, and public access for recreational use of the Naval Base. Interior also favored the Mustin Field Natural Area Alternative, Navy will place a Notice in the conveyance document identifying the location and extent of wetlands that exist on the Naval Base.

The Pennsylvania Game Commission expressed concern about the potential effect on the peregrine falcon arising out of reuse of the Naval Base. Navy will place a Notice in the conveyance

document describing the Department of the Interior's recommendations for minimizing impacts on the nesting falcons.

In its comment on the DEIS, the Pennsylvania Human Relations Commission asked Navy to address methods of monitoring compliance with civil rights laws in the future marketing of the Capehart Housing. The Commission's comment on the FEIS stated that Navy had adequately addressed this issue.

Health Alternatives International, Inc. asked that the acquiring entity convert a building for use as a center for volunteers who would coordinate educational outreach to the community. It also requested continued operation of the child care center and recreational facilities. Navy has provided these requests to the Local Redevelopment Authority for its consideration.

A private entity, the Philadelphia International Development Group (PIDG), suggested that the eastern part of the Base should be redeveloped as a mixed use property that would provide commercial, retail, entertainment and manufacturing activities similar in nature, extent, and impact to the Mustin Field Retail Alternative. Navy also provided PIDG's proposal to the LRA for its consideration.

One private citizen expressed concern about the effects of reuse and redevelopment on community and emergency services in South Philadelphia. This citizen was also concerned about the traffic congestion that could occur during a ''triple event'', described as simultaneous public events at three nearly athletic facilities, *i.e.*, Veterans Stadium, the Spectrum, and the Core States Center. Navy concluded that there is sufficient response time and that there are adequate facilities for reasonably foreseeable emergencies. Additionally, the City regards the possibility of ''triple event'' traffic congestion as unlikely.

REGULATIONS GOVERNING THE DISPOSAL DECISION: Since the proposed action contemplates a disposal action under the Defense Base Closure and Realignment Act of 1990 (DBCRA), Public Law 101–510, 10 U.S.C. 2687 note, Navy's decision was based upon the environmental analysis in the FEIS and application of the standards set forth in DBCRA, the Federal Property Management Regulations (FPMR), 41 CFR Part 101–47, and the Department of Defense Rule on Revitalizing Base Closure Communities and Community Assistance (DoD Rule), 32 CFR Parts 90 and 91.

Section 101–47.303–1 of the FPMR requires that the disposal of Federal property benefit the Federal Government and constitute the highest and best use of the property. Section 101–47.4909 of the FPMR defines the ''highest and best use'' as that use to which a property can be put that produces the highest monetary return from the property, promotes its maximum value, or serves a public or institutional purpose. The ''highest and best use'' determination must be based upon the property's economic potential, qualitative values inherent in the property, and utilization factors affecting land use such as zoning, physical characteristics, other private and public uses in the vicinity, neighboring improvements, utility services, access, roads, location, and environmental and historical considerations.

After Federal property has been conveyed to non-Federal entities, the property is subject to local land use regulations, including zoning and subdivision regulations, and building codes. Unless expressly authorized by statute, the disposing Federal agency cannot restrict the future use of surplus Government property. As a result, the local community exercises substantial control over future use of the property. For this reason, local land use plans and zoning effect determination of the highest and best use of surplus Government property.

The DBCRA directed the Administrator of the General Services Administration (GSA) to delegate to the Secretary of Defense authority to transfer and dispose of base closure property. Section 2905(b) of DBCRA directs the Secretary of Defense to exercise this authority in accordance with GSA's property disposal regulations, set forth at Sections 101–47.1 through 101–47.8 of the FPMR. By letter dated December 20, 1991, the Secretary of Defense delegated the authority to transfer and dispose of base closure property closed under DBCRA to the Secretaries of the Military Departments. Under this delegation of authority, the Secretary of the Navy must follow FPMR procedures for screening and disposing of real property when implementing base closures. Only where Congress has expressly provided additional authority for disposing of base closure property, *e.g.*, the economic development conveyance authority established in 1993 by Section 2905(b)(4) of DBCRA, may Navy apply disposal procedures other than the FPMR's prescriptions.

In Section 2901 of the National Defense Authorization Act for Fiscal Year 1994, Public Law 103–160, Congress recognized the economic hardship occasioned by base closures, the Federal interest in facilitating economic recovery of base closure communities, and the need to identify and implement reuse and redevelopment of property at closing installations. In Section 2903(c) of Public Law 103–160, Congress directed the Military Departments to consider each base closure community's economic needs and priorities in the property disposal process. Under Section 2905(b)(2)(E) of DBCRA, Navy must consult with local communities before it disposes of base closure property and must consider local plans developed for reuse and redevelopment of the surplus Federal property.

The Department of Defense's goal, as set forth in Section 90.4 of the DoD Rule, is to help base closure communities achieve rapid economic recovery through expeditious reuse and redevelopment of the assets at closing bases, taking into consideration local market conditions and locally developed reuse plans. Thus, the Department has adopted a consultative approach with each community to ensure that property disposal decisions consider the Local Redevelopment Authority's reuse plan and encourage job creation. As a part of this cooperative approach, the base closure community's interests, *e.g.*, reflected in its zoning for the area, play a significant role in determining the range of alternatives considered in the environmental analysis for property disposal. Furthermore, Section 91.7(d)(3) of the DoD Rule provides that the Local Redevelopment Authority's plan generally will be used as the basis for the proposed disposal action.

The Federal Property and Administrative Services Act of 1949, 40 U.S.C. 484, as implemented by the FPMR, identifies several mechanisms for disposing of surplus base closure property: by public benefit conveyance (FPMR Sec. 110–47.303–2); by negotiated sale (FPMR Sec. 101–47.304–8); and by competitive sale (FPMR 101–47.304–7). Additionally, in Section 2905(b)(4), the DBCRA established economic development conveyances as a means of disposing of surplus base closure property. The selection of any particular method of conveyance merely implements the Federal agency's decision to dispose of the property. Decisions concerning whether to undertake a public benefit conveyance or an economic development conveyance, or to sell property by negotiation or by competitive bid are committed by law to agency discretion. Selecting a method of disposal implicates a broad range of factors and

rests solely within the Secretary of the Navy's discretion.

CONCLUSION: The Reuse Plan prepared by the City of Philadelphia is consistent with the prescriptions of the FPMR and Section 90.4 of the DoD Rule. The LRA has determined in its Reuse Plan that the property should be used for several purposes including light and heavy industrial, manufacturing, administrative, research and development, educational, intermodal transportation, and waterfront commercial and industrial activities. The property's location, physical characteristics, and existing infrastructure, as well as the current uses of adjacent property, make it appropriate for the proposed uses.

The Reuse Plan responds to local and regional economic conditions, promotes rapid economic recovery from the impact of the Base's closure, and is consistent with President Clinton's Five-Part Plan for revitalizing base closure communities, which emphasizes local economic redevelopment of the closing military facility and creation of new jobs as the means to revitalize these communities. 32 CFR Parts 90 and 91, 59 FR 16123 (1994). The acquiring entity, under the direction of Federal, State and local agencies with regulatory authority over protected resources, will be responsible for implementing necessary mitigation measures.

Although the ''No action'' alternative has less potential for causing adverse environmental impacts, that alternative would not alleviate the economic hardship that Congress expressly recognized as accompanying base closures. It would not foster local economic redevelopment of the Naval Base property and would not create new jobs. Additionally, it would not take advantage of the property's location, physical characteristics, and infrastructure or the current uses of adjacent property.

Accordingly, Navy will dispose of Naval Base Philadelphia in a manner that is consistent with the City of Philadelphia's Reuse Plan for the property.

Dated: June 26, 1997.

William J. Cassidy, Jr.,

Deputy Assistant Secretary of the Navy (Conversion and Redevelopment).

[FR Doc. 97–17901 Filed 7–8–97; 8:45 am]

BILLING CODE 3810–FF–M

DEPARTMENT OF EDUCATION

[CFDA No.: 84.132A–4]

Centers for Independent Living; Notice Inviting Applications for New Awards for Fiscal Year (FY) 1997

Purpose of Program

This program provides support for planning, conducting, administering, and evaluating centers for independent living (centers) that comply with the standards and assurances in section 725 of the Rehabilitation Act of 1973, as amended (Act), consistent with the State plan for establishing a statewide network of centers. Centers are consumer-controlled, community-based, cross-disability, nonresidential, private nonprofit agencies that are designed and operated within local communities by individuals with disabilities and provide an array of independent living (IL) services.

Eligible Applicants

To be eligible to apply, an applicant must be a consumer-controlled, community-based, cross-disability, nonresidential, private nonprofit agency as defined in 34 CFR 364.4; have the power and authority to meet the requirements in 34 CFR 366.2(a)(1); be able to plan, conduct, administer, and evaluate a center for independent living consistent with the requirements of section 725 (b) and (c) of the Act and Subparts F and G of 34 CFR Part 366; and either—(1) not currently be receiving funds under Part C of Chapter 1 of Title VII of the Act; or (2) propose the expansion of an existing center through the establishment of a separate and complete center (except that the governing board of the existing center may serve as the governing board of the new center) in a different geographical location. Eligibility under this competition is limited to entities that meet the requirements of 34 CFR 366.24 and propose to serve areas that are unserved or underserved in the States and territories listed under *Available Funds.*

Supplementary Information: The current grantee under this program that is eligible for a grant under the statute has withdrawn its application. Therefore, the funds are available to other applicants.

Deadline for Transmittal of Applications: August 15, 1997.

Deadline for Intergovernmental Review: September 29, 1997.

Applications Available: July 9, 1997.

Available Funds: $431,691 as distributed in the following manner:

South Carolina $431,691.

Estimated Range of Awards: $100,000–431,691.

Estimated Number of Awards: 1–4 per eligible State.

Note: The Department is not bound by any estimates in this notice.

Project Period: Up to 60 months.

Applicable Regulations: (a) The Education Department General Administrative Regulations (EDGAR) in 34 CFR parts 74, 75, 77, 79, 80, 81, 82, 85, and 96; and (b) The regulations for this program in 34 CFR Parts 364 and 366.

For Applications or Further Information Contact: John Nelson, U.S. Department of Education, 600 Independence Avenue, S.W., Room 3326 Switzer Building, Washington, D.C. 20202–2741. Telephone (202) 205–9362. Individuals who use a telecommunications device for the deaf (TDD) may call the Federal Information Relay Service (FIRS) at 1–800–877–8339 between 8 a.m. and 8 p.m., Eastern time, Monday through Friday.

Information about the Department's funding opportunities, including copies of application notices for discretionary grant competitions, can be downloaded from the Rehabilitation Services Administration's electronic bulletin board, telephone (202) 205–5574 (2400 bps) and (202) 205–9950 (9600 bps) or from the World Wide Web (at http://www.ed.gov/offices/OSERS/RSA/rsakits.html); and can be viewed on the Department's electronic bulletin board (ED Board), telephone (202) 260–9950; on the Internet Gopher Server (at gopher://gcs.ed.gov); or on the World Wide Web (at http://gcs.ed.gov). However, the official application notice for this competition is the notice published in the **Federal Register**.

Program Authority: 29 U.S.C. 721 (c) and (e) and 796(f).

Dated: July 2, 1997.

Judith E. Heumann,

Assistant Secretary for Special Education and Rehabilitative Services.

[FR Doc. 97–17802 Filed 7–8–97; 8:45 am]

BILLING CODE 4000–01–M

DEPARTMENT OF ENERGY

Disposal of Spent Nuclear Fuel and High-level Radioactive Waste at Yucca Mountain

AGENCY: Office of Civilian Radioactive Waste Management, Department of Energy.

ACTION: Notice of availability.

SUMMARY: The Department of Energy (DOE) is announcing the availability of

the ''Summary of Public Scoping Comments Related to the Environmental Impact Statement for a Geologic Repository for the Disposal of Spent Nuclear Fuel and High-level Radioactive Waste at Yucca Mountain, Nye County, Nevada'' (hereafter referred to as the comment summary document).

FOR FURTHER INFORMATION CONTACT: Ms. Wendy R. Dixon, Environmental Impact Statement (EIS) Project Manager, Yucca Mountain Site Characterization Office, Office of Civilian Radioactive Waste Management, U.S. Department of Energy, 1180 Town Center Drive, MS/010, Las Vegas, Nevada 89134, 1–800–967–3477.

SUPPLEMENTARY INFORMATION: DOE is preparing an EIS pursuant to the Nuclear Waste Policy Act, as amended (NWPA), for a geologic repository for the disposal of spent nuclear fuel (SNF) and high-level radioactive waste (HLW) at Yucca Mountain, Nye County, Nevada. On August 7, 1995 DOE published a notice of intent (60 FR 40164) encouraging the general public, Federal agencies, state and local government agencies, Native American tribal organizations, public interest groups, transportation interests, and industry and utility organizations to participate in the scoping process for the EIS. DOE held fifteen public scoping meetings across the country between August 29 and October 24, 1995 to allow interested parties the opportunity to present oral and written comments. As mentioned in the notice of intent, although the 120-day scoping period closed on December 5, 1995, DOE will consider comments received after that date to the extent practicable. DOE welcomes such comments, which may be submitted in writing to Ms. Dixon at the address above. Alternatively, comments may also be submitted through the internet and e-mail addresses identified in the ''Availability'' discussion below.

Shortly after the scoping period closed, funding to continue the National Environmental Policy Act (NEPA) process was discontinued in accordance with Fiscal Year 1996 budgetary reductions, until October 1, 1996 (the beginning of Fiscal Year 1997). During the interim, on July 9, 1996, to simplify the DOE NEPA process, reduce cost, and save time, DOE published a final rule (61 FR 36222) eliminating the requirement in its new regulations to prepare implementation plans. The elimination of this requirement, however, did not affect the requirement to consider public scoping comments and factor them into the preparation of the EIS.

Although not required to do so, DOE has prepared a comment summary document to inform the public of the results of the scoping process. The comment summary document summarizes and categorizes comments received during the public scoping process into issue areas, and discusses how these issue areas will be addressed in the EIS.

As discussed in the Notice of Intent to prepare the EIS (60 FR 40164), the NWPA directs DOE to evaluate the suitability of the Yucca Mountain site as a potential site for a geologic repository for the disposal of SNF and HLW. If the Secretary of Energy determines that the Yucca Mountain site is suitable, the Secretary may then recommend that the President approve the site for development of a repository. Under the NWPA, any such recommendation is considered a major Federal action and must be accompanied by a final EIS. The NWPA states that the EIS need not consider the need for a repository, alternatives to geologic disposal, or alternative sites to the Yucca Mountain site. Therefore, as described in the Notice of Intent, the proposed action would be to construct, operate, and eventually close a repository at Yucca Mountain for the geologic disposal of commercial and DOE-owned SNF and HLW.

SNF and HLW generate heat as a result of radioactive decay. The amount of heat generated is important because of its potential for changing the long-term performance characteristics of a repository. The amount of heat in a repository, or ''thermal load'', can be controlled by varying how densely SNF or HLW is placed in a repository, as well as by selective placement of fuels that have different ages. Packing SNF and HLW packages closely together would generate an upper range of repository temperatures. In contrast, packing SNF and HLW farther apart would generate a lower range of repository temperatures. DOE has identified three implementation alternatives, based on thermal load objectives, that would implement the proposed action. The EIS will therefore evaluate three thermal load ranges: High Thermal Load (emplacement of greater than 80 Metric Tons of Heavy Metal (MTHM) SNF and HLW per acre); Low Thermal Load (less than 40 MTHM per acre); and Intermediate Thermal Load (between 40 and 80 MTHM per acre). For each of these implementation alternatives, DOE will include an evaluation of different SNF and HLW packaging and transportation options.

Under the NWPA DOE is prohibited from emplacing more than 70,000 MTHM of SNF and HLW in the first repository until such time as a second repository is in operation. Many comments received during the scoping process requested that the EIS evaluate not only the disposal of 70,000 MTHM of SNF and HLW, but also the disposal of all existing and projected SNF and HLW. In addition, commentors noted that in recent planning and NEPA documents, DOE has indicated that other waste types, such as commercial Greater-than-Class C low-level waste, may require permanent isolation in a geologic repository, and therefore should also be considered as candidates for disposal in this EIS.

As discussed in the comment summary document, the EIS will continue to evaluate the proposed action and three thermal load implementation alternatives, as well as a no action alternative. The no action alternative will include the termination of site characterization activities at Yucca Mountain and the continued accumulation of SNF and HLW at commercial storage sites and DOE facilities. In addition, based on the scoping comments received, DOE is also considering including an analysis of the incremental environmental impacts from the disposal of all existing and projected SNF and HLW, and other highly radioactive waste types that may require permanent isolation, even though disposal at Yucca Mountain of some of these materials is not explicitly authorized.

Availability

The comment summary document will be distributed for information purposes to those individuals, agencies, Native American tribal organizations, and public interest groups who have requested that they receive copies of EIS-related information. Copies of the comment summary document may be obtained by phone (1–800–967–3477, 9:00 a.m.—8:00 p.m., Monday—Friday, Eastern Time), by faxed request (1–800–967–0739), from the internet at Uniform Resource Locator address http://www.ymp.gov under the listing entitled ''Environmental Impact Statement,'' and by e-mail by sending a request to ymp__eisr@notes.ymp.gov.

Copies of the comment summary document also are available for inspection during normal business hours at the following public reading rooms.

Inyo County, 139 North Edwards, P.O. Drawer L, Independence, CA 93526. Attn: Brad Mettam (619) 872–2913

Oakland Operations Office, U.S. Department of Energy, Public Reading Room—EIC, 1301 Clay Street, Room

700N, Oakland, CA 94612–5208. Attn: Lauren Noble (510) 637–1762

National Renewable Energy Laboratory, Public Reading Room, 1617 Cole Blvd., Golden, CO 80401. Attn: Nancy Greer (303) 275–4030

Rocky Flats Field Office, U.S. Department of Energy, Public Reading Room, Front Range Community College Library, Room B1103, 3645 West 112th Avenue, Westminster, CO 80030. Attn: Susan Barron (303) 469–4435

Atlanta Support Office, U.S. Department of Energy, Public Reading Room, 730 Peachtree Street, Suite 876, Atlanta, GA 30308–1212. Attn: Nancy Mays or Laura Nicholas (404) 347–2420

Southeastern Power Administration, U.S. Department of Energy, Legal Library, Samuel Elbert Building, 2 South Public Square, Elberton, GA 30635–2496. Attn: Joel W. Seymour or Carol M. Franklin (706) 213–3800

Boise State University Library, Government Documents, 1910 University Ave., P.O. Box 46, Boise, ID 83707–0046. Attn: Adrien Taylor (208) 385–1621

Idaho Operations Office, U.S. Department of Energy, Public Reading Room, 1776 Science Center Drive, Idaho Falls, ID 83401. Attn: Brent Jacobson (208) 526–1144

Chicago Operations Office, Document Department, University of Illinois, Chicago, 801 South Morgan Street, Chicago, IL 60607. Attn: John Shuler (312) 996–2738

Strategic Petroleum Reserve Project Management Office, U.S. Department of Energy, SPRMO/SEB Reading Room, 900 Commerce Road, East, New Orleans, LA 70123. Attn: Ulysses Washington (504) 734–4243

Churchill County, 190 West 1st Street, Fallon, NV 89406. Attn: Alan Kalt (702) 423–5136

Clark County, 500 S. Grand Central Parkway, #3012, P.O. Box 551751, Las Vegas, NV 89155–1751. Attn: Dennis Bechtel (702) 455–5175

Esmeralda County, Public Reading Room, Commissioner's Office, P.O. Box 517, Goldfield, NV 89013. Attn: Susan Dudley (702) 485–3461

Eureka County, 1012 Monroe Street, P.O. Box 714, Eureka, NV 89316. Attn: Sandy Green (702) 237–5407

Lander County, 500 Main Street, P.O. Box 10, Austin, NV 89310. Attn: Tammy Manzini (702) 964–2447

University of Nevada, Las Vegas, James Dickinson Library—Government Publications, 4505 Maryland Pkwy., Las Vegas, NV 89154–7013. Attn: Reference Desk (702) 895–3409

Lincoln County, #1 Main Street, P.O. Box 90, Pioche, NV 89043. Attn: Jason Pitts (702) 962–5390

Mineral County, 1st and A Streets, P.O. Box 1600, Hawthorne, NV 89415. Attn: Vernon Poe (702) 945–2484.

Nevada State Clearinghouse, Department of Administration, Capitol Complex, Carson City, NV 89710. Attn: Julie Butler (702) 486–3000

Nye County, 475 St. Patrick Street, P.O. Box 1767, Tonopah, NV 89049. Attn: Les Bradshaw (702) 482–8183

University of Nevada Library, Business and Government Information Center, Reno, NV 89557–0044. Attn: Duncan Eldrich (702) 784–6500

White Pine County, 957 Campton Street, Ely, NV 89301. Attn: Ferd Mariani (702) 289–2341

Albuquerque Operations Office, U.S. Department of Energy, Technical Vocational Institute, 525 Buena Vista, SE, Albuquerque, NM 87106. Attn: Russ Gladstone (505) 845–4097

Fernald Area Office, U.S. Department of Energy, Public Information Office, 7400 Willey Road, Cincinnati, OH 45239. Attn: Gary Stegner (513) 648–3153

Bartlesville Project Office, U.S. Department of Energy, National Institute for Petroleum and Energy Research, BPO/NIPER Library, 220 Virginia Ave., P.O. Box 2565, Bartlesville, OK 74005. Attn: Josh Stroman (918) 337–4371

Southwestern Power Administration, U.S. Department of Energy, Public Reading Room, 1 West 3rd, Suite 1600, P.O. Box 1619, Tulsa, OK 74101. Attn: Pam Bland (918) 595–6608

Bonneville Power Administration, U.S. Department of Energy—BPA–C–ACS–1, 905 NE 11th Street, Portland, OR 97208. Attn: Sue Ludeman (503) 230–7334

Pittsburgh Energy Technology Center, U.S. Department of Energy, Building 922/M210, Cochrans Mill Road, Pittsburgh, PA 15236–0940. Attn: Anne C. Dunlap (412) 892–6167

Savannah River Operations Office, Gregg-Graniteville Library, University of South Carolina, Aiken, 171 University Pkwy., Aiken, SC 29801. Attn: David Darugh (803) 725–2497

University of South Carolina, Thomas Cooper Library, Documents/Microfilms Department, Green and Sumpter Streets, Columbia, SC 29208. Attn: Lester Duncan (803) 777–4841

Oak Ridge Operations Office, U.S. Department of Energy, Public Reading Room, 55 S. Jefferson Circle, Room 112 Oak Ridge, TN 37831–8510. Attn: Amy Rothrock (423) 576–1216

Southern Methodist University, Central University Libraries, Fondren Library—Documents Department, P.O. Box 135, Dallas, TX 75257–0135. Attn: Robin Gruner (214) 768–2561

University of Utah, Marriott Library—Special Collections, Salt Lake City, UT 84112. Attn: Walter Jones (801) 581–6273

U.S. Department of Energy, Room 1E–190, Forrestal Building, 1000 Independence Ave., SW, Washington, D.C. 20585. Attn: Carolyn Lawson (202) 586–5955

OCRWM National Information Center, 600 Maryland Ave., SW, Suite 760, Washington, D.C. 20024. Attn: Elizabeth Smeda (202) 488–6728

Richland Operations Office, U.S. Department of Energy Public Reading Room, 100 Sprout Road, Room 130 West, P.O. Box 999, MS:H2–53, Richland, WA 99352. Attn: Terri Traub (509) 376–8583

Yucca Mountain Science Center, U.S. 95—Star Route 374, Beatty, NV 89003. Attn: Marina Anderson (702) 553–2130

Yucca Mountain Science Center, 4101B Meadows Lane, Las Vegas, NV 89107. Attn: Melinda d'Ouville (702) 295–1312

Yucca Mountain Science Center, 1141 South Highway 160, Pahrump, NV 89041. Attn: Lee Krumm (702) 727–0896

Issued in Washington, D.C. on June 27, 1997.

Wendy R. Dixon,

Assistant Manager, Environment, Safety & Health, and Repository EIS Project Manager, Yucca Mountain Site Characterization Project Office, Las Vegas, Nevada.

[FR Doc. 97–17891 Filed 7–8–97; 8:45 am]

BILLING CODE 6450–01–P

DEPARTMENT OF ENERGY

Federal Energy Regulatory Commission

[Docket No. CP97–604–000]

ANR Pipeline Company; Notice of Request Under Blanket Authorization

July 2, 1997.

Take notice that on June 25, 1997, ANR Pipeline Company (ANR 500 Renaaissance Center, Detroit, Michigan 48243, filed a request with the Commission in Docket No. CP97–604–000, pursuant to Sections 157.205, 157.212, and 157.216(b) of the Commission's Regulations under the Natural Gas Act (NGA) for authorization to exchange a 6-inch turbine meter at its Oshkosh Meter Station with a 4-inch

turbine meter at its Winchester Meter Station authorized in blanket certificate issued in Docket No. CP82–480–000, all as more fully set forth in the request on file with the Commission and open to public inspection.

ANR states that the purpose of the exchange is to obtain more efficient use of its facilities at the two meter stations. The exchange of meters will cost approximately $21,400.00. The proposed annual quantities of natural gas to be delivered at these stations are expected to be unaffected by the exchange of the turbine meters.

Any person or the Commission's staff may, within 45 days after the Commission has issued this notice, file pursuant to Rule 214 of the Commission's Procedural Rules (18 CFR 385.214) a motion to intervene or notice of intervention and pursuant to Section 157.205 of the Regulations under the NGA (18 CFR 157.205) a protest to the request. If no protest is filed within the allowed time, the proposed activity shall be deemed to be authorized effective the day after the time allowed for filing a protest. If a protest is filed and not withdrawn within 30 days after the time allowed for filing a protest, the instant request shall be treated as an application for authorization pursuant to Section 7 of the NGA.

Lois D. Cashell,

Secretary.

[FR Doc. 97–17840 Filed 7–8–97; 8:45 am]

BILLING CODE 6717–01–M

DEPARTMENT OF ENERGY

Federal Energy Regulatory Commission

[Docket No. ER97–3107–000]

Cleveland Electric Illuminating Company; Notice of Filing

July 2, 1997.

Take notice that on June 16, 1997, Cleveland Electronic Illuminating Company tendered for filing an amendment in the above-referenced docket.

Any person desiring to be heard or to protest said filing should file a motion to intervene or protest with the Federal Energy Regulatory Commission, 888 First Street, N.E., Washington, D.C. 20426, in accordance with Rules 211 and 214 of the Commission's Rules of Practice and Procedure (18 CFR 385.211 and 18 CFR 385.214). All such motions or protests should be filed on or before July 14, 1997. Protests will be considered by the Commission in determining the appropriate action to be taken, but will not serve to make the protestants parties to the proceeding. Any person wishing to become a party must file a motion to intervene. Copies of this filing are on file with the Commission and are available for public inspection.

Lois D. Cashell,

Secretary.

[FR Doc. 97–17810 Filed 7–8–97; 8:45 am]

BILLING CODE 6717–01–M

DEPARTMENT OF ENERGY

Federal Energy Regulatory Commission

[Docket No. RP97–63–005]

Colorado Interstate Gas Company; Notice of Tariff Compliance Filing

July 2, 1997.

Take notice that on June 27, 1997, Colorado Interstate Gas Company (CIG), tendered for filing to become part of its FERC Gas Tariff, First Revised Volume No. 1 tariff, First Revised Sheet No. 229C, Second Revised Sheet No. 297, Second Revised Sheet No. 298, and Original Sheet No. 298A to be effective August 1, 1997.

CIG states the tariff sheets are filed in compliance with Order No. 587–C, and the order issued June 6, 1997 in Docket No. RP97–63–003, as well as Section 154.203 of the Commission's regulations.

Any person desiring to protest this filing should file a protest with the Federal Energy Regulatory Commission, 888 First Street, N.E., Washington, DC 20426, in accordance with Section 385.211 of the Commission's Regulations. All such protests must be filed as provided in Section 154.210 of the Commission's Regulations. Protests will be considered by the Commission in determining the appropriate action to be taken, but will not serve to make protestants parties to the proceeding. Copies of this filing are on file with the Commission and are available for public inspection in the Public Reference Room.

Lois D. Cashell,

Secretary.

[FR Doc. 97–17829 Filed 7–8–97; 8:45 am]

BILLING CODE 6717–01–M

DEPARTMENT OF ENERGY

Federal Energy Regulatory Commission

[Docket No. GT97–51–000]

Colorado Interstate Gas Company; Notice of Filing of Refund Report

July 2, 1997.

Take notice that on June 27, 1997, Colorado Interstate Gas Company (CIG) filed a refund report pursuant to Docket No. RP97–340–000. Refunds were paid by CIG on June 13, 1997.

CIG states that the report summarizes refunds made by CIG to its customers for the period January 1, 1996 through December 31, 1996, pursuant to Docket No. RP97–340–000.

CIG states that copies of CIG's filing have been served on CIG's transportation customers, interested state commissions, and all parties to the proceedings.

Any person desiring to be heard or to protest said filing should file a petition to intervene or protest with the Federal Energy Regulatory Commission, 888 First Street, N.E., Washington, D.C. 20426, in accordance with Rules 214 or 211 of the Commission's Rules of Practice and Procedure (18 CFR Section 385.214 and 385.211). All such petitions or protests should be filed on or before July 9, 1997. Protests will be considered by the Commission in determining the appropriate action to be taken, but will not serve to make protestants parties to the proceeding. Any person wishing to become a party must file a petition to intervene. Copies of this filing are on file with the Commission and are available for public inspection.

Lois D. Cashell,

Secretary.

[FR Doc. 97–17835 Filed 7–8–97; 8:45 am]

BILLING CODE 6717–01–M

DEPARTMENT OF ENERGY

Federal Energy Regulatory Commission

[Docket No. GT97–34–000]

Columbia Gas Transmission Corporation; Notice of Amended Service Agreement

July 2, 1997.

Take notice that on June 26, 1997, Columbia Gas Transmission Corporation (Columbia) tendered for filing with the Federal Energy Regulatory Commission (Commission) an Amended and Restated FSS Service Agreement by and between Columbia and West Ohio Gas Company.

Columbia states that this filing is being made in accordance with the settlement in Docket No. RP95–408, et al. (See Stipulation and Agreement, Article I, Section F (1)(d)(ii) which was approved by the Commission (77 FERC (61044 (1997)).

Any person desiring to be heard or to protest this filing should file a motion to intervene or protest with the Federal Energy Regulatory Commission, 888 First Street NE, Washington, DC 20426, in accordance with Sections 385.211 and 385.214 of the Commission's Rules and Regulations. All such motions or protests must be filed on or before July 9, 1997. Protests will be considered by the Commission in determining the appropriate action to be taken, but will not serve to make protestants parties to the proceeding. Copies of this filing are on file with the Commission and are available for public inspection in the Public Reference Room.

Lois D. Cashell,

Secretary.

[FR Doc. 97–17809 Filed 7–8–97; 8:45 am]

BILLING CODE 6717–01–M

DEPARTMENT OF ENERGY

Federal Energy Regulatory Commission

[Docket No. CP97–606–000]

Columbia Gas Transmission Corporation; Notice of Request Under Blanket Authorization

July 2, 1997.

Take notice that on June 26, 1997, Columbia Gas Transmission Corporation (Applicant), 1700 MacCorkle Avenue, SE., Charleston, West Virginia 25314–1599, filed in Docket No. CP97–606–000 a request pursuant to Sections 157.205 and 157.211 of the Commission's Regulations under the Natural Gas Act for authorization to construct and operate the facilities necessary to establish six additional points of delivery to existing customers for firm transportation service, under its blanket certificate issued in Docket No. CP83–76–000,[1] all as more fully set forth in the request for authorization on file with the Commission and open for public inspection.

Applicant requests authorization to construct and operate the necessary facilities to establish six new points of delivery for firm transportation service under Part 284 of the Commission's regulations and existing authorized Rate Schedules and within certificated entitlements, as follows:

Customer	Residential	Estimated daily quantity (dth)	Estimated annual quantity (dth)
Columbia Gas of Ohio, Inc. (COH)	1	1.5	150
Mountaineer Gas Company (MGC)	5	7.5	750

Applicant states the quantities to be provided through the new delivery points will be within Applicant's authorized level of services. Therefore, there is no impact on Applicant's existing design day and annual obligations to the customers as a result of the construction and operation of the new points of delivery for firm transportation service. Applicant estimates the cost to install the new taps to be approximately $150 per tap. Applicant states it will comply with all of the environmental requirements of Section 157.206(d) of the Commission's regulations prior to the construction of any facilities.

Any person or the Commission's staff may, within 45 days after issuance of the instant notice by the Commission, file pursuant to Rule 214 of the Commission's Procedural Rules (18 CFR 385.214) a motion to intervene or notice of intervention and pursuant to Section 157.205 of the Regulations under the Natural Gas Act (18 CFR 157.205) a protest to the request. If no protest is filed within the time allowed therefor, the proposed activity shall be deemed to be authorized effective the day after the time allowed for filing a protest. If a protest is filed and not withdrawn within 30 days after the time allowed for filing a protest, the instant request shall be treated as an application for authorization pursuant to Section 7 of the Natural Gas Act.

Lois D. Cashell,

Secretary.

[FR Doc. 97–17838 Filed 7–8–97; 8:45 am]

BILLING CODE 6717–01–M

DEPARTMENT OF ENERGY

Federal Energy Regulatory Commission

[Docket No. ER97–2792–000]

Community Electric Power Agency; Notice of Filing

July 2, 1997.

Take notice that on June 6, 1997, Community Electric Power Agency tendered for filing an amendment in the above-referenced docket.

Any person desiring to be heard or to protest said filing should file a motion to intervene or protest with the Federal Energy Regulatory Commission, 888 First Street, N.E., Washington, D.C. 20426, in accordance with Rules 211 and 214 of the Commission's Rules of Practice and Procedure (18 CFR 385.211 and 18 CFR 385.214). All such motions or protests should be filed on or before July 14, 1997. Protests will be considered by the Commission in determining the appropriate action to be taken, but will not serve to make the protestants parties to the proceeding. Any person wishing to become a party must file a motion to intervene. Copies of this filing are on file with the Commission and are available for public inspection.

Lois D. Cashell,

Secretary.

[FR Doc. 97–17811 Filed 7–8–97; 8:45 am]

BILLING CODE 6717–01–M

DEPARTMENT OF ENERGY

Federal Energy Regulatory Commission

[Docket No. GT97–48–000]

East Tennessee Natural Gas Company; Notice of Refund Report

July 2, 1997.

Take notice that on June 27, 1997, East Tennessee Natural Gas Company (East Tennessee) filed a refund report pursuant to Ordering Paragraph (c) of the Commission's February 22, 1995, order in Gas Research Institute (GRI), Docket No. RP95–124–000.

[1] *See*, 22 FERC ¶ 62,029 (1983).

East Tennessee states that East Tennessee received a refund from GRI in the amount of $442,443.

East Tennessee states that it has refunded amounts to firm transportation customers that received nondiscounted service during 1996 by adjustments to their June invoices.

East Tennessee states that copies of this filing have been mailed to each of East Tennessee's customers and interested state commissions.

Any person desiring to be heard or to protest this filing should file a motion to intervene or protest with the Federal Energy Regulatory Commission, 888 First Street, Washington, D.C. 20426, in accordance with 18 CFR Sections 385.211 and 385.214 of the Commission's Regulations. All such motions or protests must be filed on or before July 9, 1997. Protests will be considered by the Commission in determining the appropriate action to be taken, but will not serve to make protestants parties to the proceeding. Any person wishing to become a party must file a motion to intervene. Copies of this filing are on file with the Commission and available for public inspection in the Public Reference Room.

Lois D. Cashell,

Secretary.

[FR Doc. 97–17803 Filed 7–8–97; 8:45 am]

BILLING CODE 6717–01–M

DEPARTMENT OF ENERGY

Federal Energy Regulatory Commission

[Docket Nos. TQ97–6–23–000 and TM97–12–23–000]

Eastern Shore Natural Gas Company; Notice of Proposed Changes in Ferc Gas Tariff

July 2, 1997.

Take notice that on June 27, 1997, Eastern Shore Natural Gas Company (Eastern Shore) tendered for filing certain revised tariff sheets in the above captioned docket as part of its FERC Gas Tariff, First Revised Volume No. 1, with a proposed effective date of August 1, 1997.

Eastern Shore states the revised tariff sheets are being filed pursuant to Section 21 and Section 23 of the General Terms and Conditions of Eastern Shore's Gas Tariff to reflect changes in Eastern Shore's jurisdictional sales rates. The sales rates set forth on the revised tariff sheets reflect an increase of $1.7980 per dt in the Demand Charge and an increase of $0.2575 per dt in the Commodity Charge, as measured against Eastern Shore's corresponding sales rates in Docket No. TQ97–5–23–000 as filed on March 31, 1996 and approved by the Commission's order dated April 28, 1997.

Eastern Shore states that copies of the filing have been served upon its jurisdictional customers and interested State Commissions.

Any person desiring to be heard or to protest said filing should file a motion to intervene or protest with the Federal Energy Regulatory Commission, 888 First Street, N.E., Washington, D.C. 20426, in accordance with Rule 211 and Rule 214 of the Commission's Rules of Practice and Procedure (18 CFR Section 385.211 and Section 385.214). All such motions or protests must be filed as provided in Section 154.210 of the Regulations. Protests will be considered by the Commission in determining the appropriate action to be taken, but will not serve to make protestants parties to the proceeding. Any person wishing to become a party must file a motion to intervene. Copies of this filing are on file with the Commission and are available for public inspection.

Lois D. Cashell,

Secretary.

[FR Doc. 97–17816 Filed 7–8–97; 8:45 am]

BILLING CODE 6717–01–M

DEPARTMENT OF ENERGY

Federal Energy Regulatory Commission

[Docket Nos. RP97–20–001 and –002 and RP97–194–000]

El Paso Natural Gas Company; Supplement to Notice of Technical Conference

July 2, 1997.

On June 5, 1997, the technical conference in the above captioned proceeding was noticed for July 9, 1997. The proceeding concerns implementation by El Paso Natural Gas Company (El Paso) of the Gas Industry Standards Board (GISB) standards. On June 23, 1997, El Paso, in Docket No. RP97–194–000, filed tariff sheets to revise the scheduling provisions to permit shippers to submit an intra-day request prior to the day of gas flow. The parties at the technical conference may discuss how the proposed revision impacts the issues to be addressed at the technical conference.

Lois D. Cashell,

Secretary.

[FR Doc. 97–17830 Filed 7–8–97; 8:45 am]

BILLING CODE 6717–01–M

DEPARTMENT OF ENERGY

Federal Energy Regulatory Commission

[Docket No. RP95–363–006]

El Paso Natural Gas Company; Notice of Technical Conference

July 2, 1997.

In an order issued June 20, 1997, in Docket No. RP95–363–006, concerning El Paso Natural Gas Company's (El Paso) fuel charges, the Commission directed Staff to convene a technical conference to address the issues raised by the filing.

At the request of El Paso, the technical conference will be held on Thursday, July 10, 1997, at 10:00 a.m. in a room to be designated at the offices of the Federal Energy Regulatory Commission, 888 First Street, NE., Washington, DC 20426.

All interested parties and Staff are permitted to attend.

Lois D. Cashell,

Secretary.

[FR Doc. 97–17832 Filed 7–8–97; 8:45 am]

BILLING CODE 6717–01–M

DEPARTMENT OF ENERGY

Federal Energy Regulatory Commission

[Docket No. RP97–114–005]

Equitrans, L.P.; Notice of Proposed Changes in FERC Gas Tariff

July 2, 1997.

Take notice that on June 30, 1997, Equitrans, L.P. (Equitrans) tendered for filing as part of its FERC Gas Tariff, First Revised Volume No. 1, the following revised tariff sheets to become effective August 1, 1997:

Fourth Revised Sheet No. 202
Third Revised Sheet No. 251
Third Revised Sheet No. 252

Equitrans states that the purpose of this filing is to comply with the Federal Energy Regulatory Commission's Letter Order issued on June 16, 1997 in the captioned docket, and to implement the Internet Web page standards which were adopted in Order No. 587–C for August 1, 1997 effectiveness.

Any person desiring to protest this filing should file a protest with the Federal Energy Regulatory Commission, 888 First Street, N.E., Washington, D.C. 20426, in accordance with Section 385.211 of the Commission's Rules and Regulations. All such protests should be filed as provided in Section 154.210 of the Commission's Regulations. Protests will be considered by the Commission

in determining the appropriate action to be taken, but will not serve to make protestants parties to the proceeding. Copies of this filing are on file with the Commission and are available for public inspection in the Public Reference Room.

Lois D. Cashell,

Secretary.

[FR Doc. 97–17825 Filed 7–8–97; 8:45 am]

BILLING CODE 6717–01–M

DEPARTMENT OF ENERGY

Federal Energy Regulatory Commission

[Docket No. GT97–52–000]

Equitrans, L.P.; Notice of Proposed Changes In FERC Gas Tariff

July 2, 1997.

Take notice that on June 30, 1997 Equitrans, L.P. (Equitrans), tendered for filing to become part of its FERC Gas Tariff, First Revised Volume No. 1, the following tariff sheet to become effective July 1, 1997:

Fifth Revised Sheet No. 400
Seventh Revised Sheet No. 401

Equirtrans states that this filing is made to update Equirtrans' index of customers. In Order No. 581 the Commission established a revised format for the Index of Customers to be included in the tariffs of interstate pipelines and required the pipelines to update the index on a quarterly basis to reflect changes in contract activity. Equirtrans requests a waiver of the Commission's notice requirements to permit the tariff sheet to take effect on July 1, 1997, the second calendar quarter, in accordance with Order No. 581.

Equirtrans states that a copy of its filing has been served upon its customers and interested state commissions.

Any person desiring to be heard or to protest this filing should file a motion to intervene or protest with the Federal Energy Regulation Commission, 888 First Street, N.E., Washington, D.C. 29426, in accordance with Sections 385.211 and 385.214 of the Commission's Regulations. All such motions or protests must be filed on or before July 9, 1997. Protests will be considered by the Commission in determining the appropriate action to be taken, but will not serve to make protestants parties to the proceeding. Any person wishing to become a party must file a motion to intervene. Copies of this filing are on file with the Commission and are available for public inspection in the Public Reference Room.

Lois D. Cashell,

Secretary.

[FR Doc. 97–17834 Filed 7–8–97; 8:45 am]

BILLING CODE 6717–01–M

DEPARTMENT OF ENERGY

Federal Energy Regulatory Commission

[Docket No. GT97–50–000]

Florida Gas Transmission Company; Notice of Refund Report

July 2, 1997.

Take notice that on June 27, 1997, Florida Gas Transmission Company (FGT) tendered for filing with the Federal Energy Regulatory Commission a refund report reflecting a Gas Research Institute (GRI) refund received May 30, 1997, which FGT refunded to its eligible firm shippers on June 12, 1997.

In compliance with the Commission's February 22, 1995 Order in Docket No. RP95–124–000, FGT states that it has allocated refunds of $1,376,964 to firm shippers on a pro rata basis based on amounts paid through GRI surcharges during 1996.

Any person desiring to be heard or to protest said filing should file a motion to intervene or protest with the Federal Energy Regulatory Commission, 888 First Street, NE., Washington, DC 20426 in accordance with Sections 385.211 and 385.214 of the Commission's Rules and Regulations. All such motions or protests should be filed on or before July 9, 1997. Protests will be considered by the Commission in determining the appropriate action to be taken, but will not serve to make protestants parties to the proceeding. Any person wishing to become a party must file a motion to intervene. Copies of this filing are on file with the Commission and are available for public inspection in the Public Reference Room.

Lois D. Cashell,

Secretary.

[FR Doc. 97–17836 Filed 7–8–97; 8:45 am]

BILLING CODE 6717–01–M

DEPARTMENT OF ENERGY

Federal Energy Regulatory Commission

[Docket No. RP97–310–002]

Garden Banks Gas Pipeline, LLC; Notice of Proposed Changes in FERC Gas Tariff

July 2, 1997.

Take notice that on June 26, 1997, Garden Banks Gas Pipeline, LLC (GBGP) tendered for filing as part of its FERC Gas Tariff, Original Volume No. 1, the Tariff sheets set forth on Appendix B to the filing in compliance with the Commission's Order Nos. 587–A, 587–B and 587–C to become effective June 1, August 1 and November 1, 1997.

GBGP states the purpose of the filing is to comply with orders issued in Docket Nos. RP97–310–000 and RP97–310–001. On May 15, 1997, the Commission issued an Order in Docket No. RP97–310–000 which directed GBGP to file actual tariff sheets within 15 days of the order to be effective June 1, 1997. On June 12, 1997, the Commission issued an Order in Docket No. RP97–310–001 and directed GBGP to file actual tariff sheets at least 30 days prior to the proposed effective dates of August 1 and November 1, 1997, respectively.

Any person desiring to protest this filing should file a protest with the Federal Energy Regulatory Commission, 888 first Street, N.E., Washington D.C. 20426, in accordance with 18 CFR 385.211 of the Commission's Rules and Regulations. All such protests must be filed in accordance with Section 154.210 of the Commission's Regulations. Protests will be considered by the Commission in determining the appropriate action to be taken, but will not serve to make Protestants parties to the proceeding. Any person wishing to become a party must file a motion to intervene. Copies of this filing are on file with the Commission and are available for public inspection in the Public Reference Room.

Lois D. Cashell,

Secretary.

[FR Doc. 97–17819 Filed 7–8–97; 8:45 am]

BILLING CODE 6717–01–M

DEPARTMENT OF ENERGY

Federal Energy Regulatory Commission

[Docket No. GT97–44–000]

Granite State Gas Transmission, Inc.; Notice of Refund Report

July 2, 1997.

Take notice that on June 26, 1997, Granite State Gas Transmission, Inc. (Granite State) tendered for filing a report of the disposition of refunds received from the Gas Research Institute (GRI) for overcollections of the GRI surcharge pursuant to the Commission's Order issued February 22, 1995. See Gas Research Institute, 70 FERC ¶ 61,205 (1995).

According to Granite State, it received a total refund of $228,610.00 from GRI, which Granite State allocated between its firm transportation customers, Bay State Gas Company (Bay State) and Northern Utilities, Inc. (Northern Utilities) and their proportionate shares were wired transferred to these customers on June 25, 1997. Granite State further states that Bay State and Northern Utilities are its only firm transportation customers.

According to Granite State, its filing has been served on Bay State and Northern Utilities and the regulatory agencies of the State of Maine, the Commonwealth of Massachusetts and the State of New Hampshire.

Any person desiring to be heard or to protest said filing should file a motion to intervene or protest with the Federal Energy Regulatory Commission, 888 First Street, N.E., Washington, DC 20426, in accordance with Rules 211 or 214 of the Commission's Rules of Practice and Procedure (18 CFR 285.211 and 385.214). All such motions to intervene or protest should be filed on or before July 9, 1997. Protests will be considered by the Commission in determining the appropriate action to be taken, but will not serve to make protestants parties to the proceeding. Any person wishing to become a party must file a motion to intervene. Copies of this filing are on file with the Commission and are available for public inspection.

Lois D. Cashell,

Secretary.

[FR Doc. 97–17807 Filed 7–8–97; 8:45 am]

BILLING CODE 6717–01–M

DEPARTMENT OF ENERGY

Federal Energy Regulatory Commission

[Docket No. RP97–147–004]

High Island Offshore System; Notice of Proposed Changes in FERC Gas Tariff

July 2, 1997.

Take notice that on June 30, 1997, High Island Offshore System (HIOS), tendered for filing as part of its FERC Gas Tariff, Second Revised Volume No. 1, the following tariff sheet to be effective August 1, 1997:

First Revised Sheet No. 110B

HIOS states that the tariff sheet is filed to comply with the Commission's directive in its June 13, 1997 letter order in the captioned proceeding. HIOS further states that copies of the filing were served on all affected entities.

Any person desiring to protest this filing should file a protest with the Federal Energy Regulatory Commission, 888 First Street, NE, Washington, DC 20426, in accordance with Section 385.211 Commission's Rules of Practice and Procedure. All such protests must be filed in accordance with Section 154.210 of the Commissions Regulations. Protests will be considered by the Commission in determining the appropriate action to be taken, but will not serve to make protestants parties to the proceeding. Copies of this filing are on file and available for public inspection in the Public Reference Room.

Lois D. Cashell,

Secretary.

[FR Doc. 97–17821 Filed 7–8–97; 8:45 am]

BILLING CODE 6717–01–M

DEPARTMENT OF ENERGY

Federal Energy Regulatory Commission

[Docket No. RP97–399–000]

Kern River Gas Transmission, Notice of Proposed Changes in FERC Gas Tariff

July 2, 1997.

Take notice that on June 25, 1997, Kern River Gas Transmission Company (Kern River) tendered for filing as part of its FERC Gas Tariff, First Revised Volume No. 1, the following tariff sheets, to become effective July 25, 1997:

First Revised Sheet No. 17
Original Sheet No. 17–A
Original Sheet No. 17–B
Original Sheet No. 17–C

Kern River states that the purpose of this filing is to extend the credit provisions for interruptible transportation services to capacity release of firm transportation for periods of less than one year and to short-term firm capacity with the same duration.

Any person desiring to be heard or protest this filing should file a motion to intervene or protest with the Federal Energy Regulatory Commission, 888 First Street, N.E., Washington, D.C. 20426, in accordance with Sections 385.214 and 385.211 of the Commission's Rules and Regulations. All such motions and protests must be filed as provided in Section 154.210 of the Commission's Regulations. Protests will be considered by the Commission in determining the appropriate action to be taken, but will not serve to make protestants parties to the proceeding. Any person wishing to become a party must file a motion to intervene. Copies of this filing are on file with the Commission and are available for public inspection in the Public Reference Room.

Lois D. Cashell,

Secretary.

[FR Doc. 97–17818 Filed 7–8–97; 8:45 am]

BILLING CODE 6717–01–M

DEPARTMENT OF ENERGY

Federal Energy Regulatory Commission

[Docket No. GT97–43–000]

K N Interstate Gas Transmission Company; Notice of Refund Report Filing

July 2, 1997.

Take notice that on June 26, 1997 K N Interstate Gas Transmission Co. (KNI) filed a refund report pursuant to the Commission's February 22, 1995 Order in Docket No. RP95–124–000.

KNI states that the refund shows the refund received by KNI from Gas Research Institute overcollections in the amount of $308,943.98 and the pro rata allocation of that refund amount of KNI's eligible firm customers.

KNI states that copies of the filing were served upon all affected firm customers of KNI and applicable state agencies.

Any person desiring to be heard or to make any protest with reference to this filing should file a motion to intervene or protest with the Federal Energy Regulatory Commission, 888 First Street, N.E. Washington, D.C. 20426, in accordance with Rules 211 and 214 of the Commission's Rules of Practice and Procedure (18 CFR 385.211 and

385.214). All such motions or protests must be filed on or before July 9, 1997. All protest filed with the Commission will be considered by it in determining the appropriate action to be taken, but will not serve to make the protestants parties to the proceeding. Any person wishing to become a party to a proceeding or to participate as a party in any hearing therein must file a petition to intervene in accordance with the Commission's Rules. Copies of this filing are on file with the Commission and are available for public inspection.

Lois D. Cashell,

Secretary.

[FR Doc. 97–17808 Filed 7–8–97; 8:45 am]

BILLING CODE 6717–01–M

DEPARTMENT OF ENERGY

Federal Energy Regulatory Commission

[Docket No. GT97–46–000]

Midwestern Gas Transmission Company; Notice of Refund Report

July 2, 1997.

Take notice that on June 27, 1997, Midwestern Gas Transmission Company (Midwestern) filed a refund report pursuant to Ordering Paragraph (c) of the Commission's February 22, 1995, order in Gas Research Institute (GRI), Docket No. RP95–124–000.

Midwestern states that Midwestern received a refund from GRI in the amount of $219,651.

Midwestern states that it has refunded amounts to firm transportation customers that received nondiscounted service during 1996 by adjustments to their June invoices.

Midwestern states that copies of this filing have been mailed to each of Midwestern's customers and interested state commissions.

Any person desiring to be heard or to protest this filing should file a motion to intervene or protest with the Federal Energy Regulatory Commission, 888 First Street, Washington, DC 20426, in accordance with 18 CFR Sections 385.211 and 385.214 of the Commission's Regulations. All such motions or protests must be filed on or before July 9, 1997. Protests will be considered by the Commission in determining the appropriate action to be taken, but will not serve to make protestants parties to the proceeding. Any person wishing to become a party must file a motion to intervene. Copies of this filing are on file with the Commission and available for public inspection in the Public Reference Room.

Lois D. Cashell,

Secretary.

[FR Doc. 97–17805 Filed 7–8–97; 8:45 am]

BILLING CODE 6717–01–M

DEPARTMENT OF ENERGY

Federal Energy Regulatory Commission

[Docket No. CP97–611–000]

National Fuel Gas Supply Corporation; Notice of Request Under Blanket Authorization

July 2, 1997.

Take notice that on June 27, 1997, National Fuel Gas Supply Corporation (National Fuel), 10 Lafayette Square, Buffalo, New York 14203, filed in Docket No. CP97–611–000 a request pursuant to Sections 157.205, and 157.211 of the Commission's Regulations under the Natural Gas Act (18 CFR 157.205, and 157.211) for approval to install and operate two residential sales taps, under National Fuel's blanket certificate authority issued in Docket No. CP83–4–000, pursuant to Section 7(c) of the Natural Gas Act (NGA), all as more fully set forth in the request which is on file with the Commission and open to public inspection.

National Fuel proposes to install and operate two new sales taps for the delivery of approximately 150 Mcf annually of natural gas at each tap to National Fuel Gas Distribution Corporation (Distribution) at an estimated cost of $1500 each for which National Fuel will be reimbursed by Distribution. National Fuel states that the proposed taps will be located on its Line K–182 in Jefferson County, and Line S in Venango County, Pennsylvania.

Any person or the Commission's Staff may, within 45 days of the issuance of the instant notice by the Commission, file pursuant to Rule 214 of the Commission's Rules of Practice and Procedure (18 CFR 385.214), a motion to intervene and pursuant to Section 157.205 of the regulations under the Natural Gas Act (18 CFR 157.205), a protest to the request. If no protest is filed within the time allowed therefor, the proposed activities shall be deemed to be authorized effective the day after the time allowed for filing a protest. If a protest is filed and not withdrawn 30 days after the time allowed for filing a protest, the instant request shall be treated as an application for authorization pursuant to Section 7 of the Natural Gas Act.

Lois D. Cashell,

Secretary.

[FR Doc. 97–17812 Filed 7–8–97; 8:45 am]

BILLING CODE 6717–01–M

DEPARTMENT OF ENERGY

Federal Energy Regulatory Commission

[Docket No. RP97–1–008 and RP97–201–007]

National Fuel Gas Supply Corporation; Notice of Compliance Filing

July 2, 1997.

Take notice that on June 30, 1997, National Fuel Gas Supply Corporation (National Fuel) tendered for filing as part of its FERC Gas Tariff, Third Revised Volume No. 1, the revised tariff sheets listed on Appendix A to the filing, to be effective April 1, 1997.

National Fuel states that the purpose of this filing is to submit tariff sheets revised to comply with the Commission's Order on Compliance Filing and Rehearing issued June 16, 1997, in Docket Nos. RP97–1–006, RP97–201–003 and RP97–201–005.

National Fuel states that it is serving copies of this filing with its firm customers, interested State commissions and each person designated on the official service list compiled by the Secretary. National Fuel states that copies are also being served on all interruptible customers as of the date of the filing.

Any person desiring to protest this filing should file a protest with the Federal Energy Regulatory Commission, 888 First Street, NE., Washington, DC 20426, in accordance with Section 385.211 of the Commission's Rules of Practice and Procedure. All such protests must be filed in accordance with Section 154.210 of the Commission's Regulations. Protests will be considered by the Commission in determining the appropriate action to be taken, but will not serve to make protestants parties to the proceeding. Copies of this filing are on file with the Commission and are available for public inspection.

Lois D. Cashell,

Secretary.

[FR Doc. 97–17831 Filed 7–8–97; 8:45 am]

BILLING CODE 6717–01–M

DEPARTMENT OF ENERGY

Federal Energy Regulatory Commission

[Docket No. RP97–105–004]

Nora Transmission Company; Notice of Proposed Changes in FERC Gas Tariff

July 2, 1997.

Take notice that on June 30, 1997, Nora Transmission Company, (Nora) tendered for filing as part of its FERC Gas Tariff, First Revised Volume No. 1, the following revised tariff sheets to become effective August 1, 1997:

Second Revised Sheet No. 164
Second Revised Sheet No. 165

Nora states that the purpose of this filing is to comply with the Commission's June 19, 1997 leter order in the captioned docket, and to implement the Internet Web Page standards which were adopted in Order No. 587–C.

Any person desiring to protest this filing should file a protest with the Federal Energy Regulatory Commission, 888 First Street, N.E., Washington, D.C. 20426, in accordance with Section 385.211 of the Commission's Rules and Regulations. All such protests must be filed as provided in Section 154.210 of the Commission's Regulations. Protests will be considered by the Commission in determining the appropriate action to be taken, but will not serve to make protestants parties to the proceeding. Copies of this filing are on file with the Commission and are available for public inspection in the Public Reference Room.

Lois D. Cashell.

Secretary.

[FR Doc. 97–17826 Filed 7–8–97; 8:45 am]

BILLING CODE 6717–01–M

DEPARTMENT OF ENERGY

Federal Energy Regulatory Commission

[Docket No. CP97–598–000]

Northern Natural Gas Company; Notice of Application

July 2, 1997.

Take notice that on June 20, 1997, as supplemented on June 30, 1997, Northern Natural Gas Company (Northern), P.O. Box 3330, Omaha, Nebraska 68103–0330, filed in Docket No. CP97–598–000 an application pursuant to Section 7(b) of the Natural Gas Act and Part 157 of the Federal Energy Regulatory Commission's Regulations for permission and approval to abandon in place the Gaines Co. #3 compressor station (Gaines Co. #3) located in Gaines County, Texas, consisting of one single-staged 172 horsepower unit, all as more fully set forth in the application which is on file with the Commission and open to public inspection.

Northern states that the Gaines Co. #3 was authorized pursuant to budget authorization in Docket No. CP81–33–001. The Gaines Co. #3 was originally constructed to effectuate delivery of volumes to support Northern's merchant function from gas fields connected upstream of the compressor. According to Northern, on or about March 27, 1997, the Gaines Co. #3 began experiencing mechanical problems which rendered the unit inoperable. Northern states that it does not have any firm contracts with the Gaines Co. #3 as a primary receipt point. Northern contends that the revenues generated by interruptible transportation service does not economically justify the cost to repair the unit. Northern asserts that Highlands Gathering and Processing Company (Highlands), the owner of the upstream gathering system connected to the Gaines Co. #3 agrees that the proposed abandonment result in the best economic solution, and has installed compression to enable the natural gas volumes connected to its gathering system to enter Northern's transmission system. Northern notes that the operating conditions have changed since it initially installed its Gaines Co. #3 resulting in the need for two stages of compression versus Northern's single staged unit to most efficiently produce the gas volumes.

Northern proposes to abandon the station in-place. However, Northern states that it intends to utilize parts from this unit in the future at other locations on its system as the need may arise. Additionally, Northern notes in a footnote that the unit or parts of the unit proposed to be abandoned may be salvaged rather than utilized elsewhere on Northern's pipeline system. Northern contends that at the time the unit is utilized it will seek any required Commission authority in order to install and operate the compressor facilities at a new location, as applicable. Northern states that all gas and service piping to the unit will be disconnected and sealed off either by the installation of blind flanges or weld caps. Northern states that it will continue to utilize the dehydration equipment, tanks, and other appurtenant valves and piping located in the plant yard for the continued operation of its pipeline facilities located downstream of the compressor station proposed for abandonment.

Any person desiring to be heard or to make any protest with reference to said application should on or before July 23, 1997, file with the Federal Energy Regulatory Commission (888 First Street, NE., Washington, D.C. 20426) a motion to intervene or a protest in accordance with the requirements of the Commission's Rules of Practice and Procedure (18 CFR 385.211) and the Regulations under the Natural Gas Act (18 CFR 157.10). All protests filed with the Commission will be considered by it in determining the appropriate action to be taken but will not serve to make the protestants parties to the proceeding. Any person wishing to become a party to a proceeding or to participate as a party in any hearing therein must file a motion to intervene in accordance with the Commission's Rules.

Take further notice that, pursuant to the authority contained in the subject to the jurisdiction conferred upon the Federal Energy Regulatory Commission by Sections 7 and 15 of the Natural Gas Act and the Commission's Rules of Practice and Procedure, a hearing will be held without further notice before the Commission or its designee on this application if no motion to intervene is filed within the time required herein, if the Commission on its on review of the matter finds that permission and approval for the proposed abandonment are required by the public convenience a necessity. If a motion for leave to intervene is timely filed, or if the Commission on its own motion believes that a formal hearing is required, further notice of such hearing will be duly given.

Under the procedure herein provided for, unless otherwise advised, it will be unnecessary for Northern to appear or be represented at the hearing.

Lois D. Cashell,

Secretary.

[FR Doc. 97–17841 Filed 7–8–97; 8:45 am]

BILLING CODE 6717–01–M

DEPARTMENT OF ENERGY

Federal Energy Regulatory Commission

[Docket No. CP97–585–000]

Northern Natural Gas Company; Notice of Request Under Blanket Authorization

July 2, 1997.

Take notice that on June 16, 1997, as supplemented on June 30, 1997, Northern Natural Gas Company

(Northern), 1111 South 103rd Street, Omaha, Nebraska, 68124–1000, filed in Docket No. CP97–585–000 a request pursuant to Section 157.205, and 157.212 of the Commission's Regulations under the Natural Gas Act (18 CFR 157.205, and 157.212) for approval to install and operate a new delivery point to accommodate natural gas deliveries by other shippers for delivery to the proposed NitroTec Energy Corporation (NitroTec) delivery point, located in Gaines County, Texas under Northern's blanket certificate authority issued in Docket No. CP82–401–000, pursuant to Section 7(c) of the Natural Gas Act (NGA), all as more fully set forth in the request which is on file with the Commission and open to public inspection.

Northern proposes to install and operate the proposed delivery point to accommodate natural gas deliveries to NitroTec under Northern's currently effective ITS throughput service agreement. Northern asserts that NitroTec has requested the proposed delivery point to provide fuel for its plant. Northern further asserts that the estimated volumes proposed to be delivered to NitroTec at the delivery point are 1,000 MMBtu on a peak day and 50,000 MMBtu on an annual basis. Northern indicates that the estimated cost to install the delivery point is $20,450 for which NitroTec will reimburse Northern.

Any person or the Commission's Staff may, within 45 days of the issuance of the intent notice by the Commission, file pursuant to Rule 214 of the Commission's Rules of Practice and Procedure (18 CFR 385.214), a motion to intervene and pursuant to Section 157.205 of the regulations under the Natural Gas Act (18 CFR 157.205), a protest to the request. If no protest is filed within the time allowed therefor, the proposed activities shall be deemed to be authorized effective the day after the time allowed for filing a protest. If a protest is filed and not withdrawn 30 days after the time allowed for filing a protest, the instant request shall be treated as an application for authorization pursuant to Section 7 of the Natural Gas Act.

Lois D. Cashell,

Secretary.

[FR Doc. 97–17842 Filed 7–8–97; 8:45 am]

BILLING CODE 6717–01–M

DEPARTMENT OF ENERGY

Federal Energy Regulatory Commission

[Docket No. CP97–607–000]

Northern Natural Gas Company Corporation; Notice of Application for Abandonment

July 2, 1997.

Take notice that on June 26, 1997, and amended on July 2, 1997, Northern Natural Gas Company (Northern), 1111 South 103rd Street, Omaha, Nebraska 68124, filed, in Docket No. CP97–607–000, an application pursuant to Section 7(b) of the Natural Gas Act and Part 157 of the Commission's Regulations for an order permitting and approving the abandonment of 600 feet of 20-inch pipeline located in Moore County, Texas, as more fully set forth in the application.

Northern requests authority to abandon and remove approximately 600 feet of 20-inch branchline to the outlet side of the Diamond Shamrock plant, all located in Moore County, Texas.

Northern states that no service will be abandoned as a result of the proposed abandonment since the 20-inch line is completely looped with a parallel 20-inch line with adequate capacity to serve the existing customers. Northern relates that all customers served by the subject facilities have consented to the abandonment.

Any person desiring to be heard or to make any protest with reference to said application should on or before July 14, 1997, file with the Federal Energy Regulatory Commission, Washington, D.C. 20426, a motion to intervene or a protest in accordance with the requirements of the Commission's Rules of Practice and Procedure (18 CFR 385.211 and 385.214) and the regulations under the Natural Gas Act (18 CFR 157.10). All protests filed with the Commission will be considered by it in determining the appropriate action to be taken but will not serve to make the protestants parties to the proceeding. Any person wishing to become a party in any proceeding herein must file a motion to intervene in accordance with the Commission's rules.

Take further notice that, pursuant to the authority contained in and subject to the jurisdiction conferred upon the Commission by Sections 7 and 15 of the Natural Gas Act and the Commission's Rules of Practice and Procedure, a hearing will be held without further notice before the Commission or its designee on this application if no motion to intervene is filed within the time required herein, if the Commission on its own review of the matter finds that permission and approval for the proposed abandonment are required by the public convenience and necessity. If a motion for leave to intervene is timely filed, or if the Commission on its own motion believes that formal hearing is required, further notice of such hearing will be duly given.

Under the procedure herein provided for, unless otherwise advised, it will be unnecessary for Northern to appear or to be represented at the hearing.

Linwood A. Watson, Jr.,

Acting Secretary.

[FR Doc. 97–17897 Filed 7–8–97; 8:45 am]

BILLING CODE 6717–01–M

DEPARTMENT OF ENERGY

Federal Energy Regulatory Commission

[Docket No. GT97–45–000]

Northwest Pipeline Corporation; Notice of Proposed Changes in FERC Gas Tariff and Filing of Non-Conforming Service Agreements

July 2, 1997.

Take notice that on June 26, 1997, Northwest Pipeline Corporation (Northwest) tendered for filing and acceptance (1) six Rate Schedule TF–1 non-conforming service agreements and (2) the following proposed tariff sheets as part of its FERC Gas Tariff, Third Revised Volume No. 1, to become effective on the date established by the Commission, but no later than July 27, 1997:

Fourth Revised Sheet No. 363
Original Sheet No. 364
Sheet Nos. 365 through 374

Northwest states that the six non-conforming service agreements are non-conforming because they contain contract-specific operational flow order (OFO) conditions and/or provisions imposing subordinate primary corridor rights with reservation charge adjustment exemptions. The tariff sheets are submitted to add such agreements to the list of non-conforming service agreements contained in Northwest's tariff.

Any person desiring to be heard or protest this filing should file a motion to intervene or protest with the Federal Energy Regulatory Commission, 888 First Street, N.E., Washington, DC 20426, in accordance with Sections 385.214 and 385.211 of the Commission's Rules and Regulations. All such motions or protests must be filed on or before July 9, 1997. Protests will be considered by the Commission

in determining and appropriate action to be taken, but will not serve to make protestants parties to the proceeding. Any person wishing to become a party must file a motion to intervene. Copies of this filing are on file with the Commission and are available for public inspection in the Public Reference Room.

Lois D. Cashell,

Secretary.

[FR Doc. 97–17806 Filed 7–8–97; 8:45 am]

BILLING CODE 6717–01–M

DEPARTMENT OF ENERGY

Federal Energy Regulatory Commission

[Docket No. RP97–134–006]

Pacific Gas Transmission Company; Notice of Compliance Filing

July 2, 1997.

Take notice that on June 30, 1997, Pacific Gas Transmission Company (PGT) tendered for filing as part of its FERC Gas Tariff, First Revised Volume No. 1–A: First Revised Sheet Nos. 136 and 144, to be effective August 1, 1997.

PGT asserts the purpose of this filing is to comply with the Office of Pipeline Regulation's June 10, 1997 Letter Order in Docket No. RP97–134–004, pursuant to Section 375.307(e)(5) of the Commission's regulations, by removing a reference to GISB Standard 4.3.6 from Paragraph 34.4 of the General Terms and Conditions of PGT's Gas Tariff, First Revised Volume No. 1–A.

PGT further states a copy of this filing has been served upon its jurisdictional customers and interested state regulatory agencies, as well as the official service list compiled by the Secretary in the above-referenced proceeding.

Any person desiring to protest said filing should file a protest with the Federal Energy Regulatory Commission, 888 First Street, NE., Washington, DC 20426, in accordance with Section 385.211 of the Commission's Rules of Practice and Procedure. All such protests must be filed as provided in Section 154.210 of the Commission's Regulations. Protests will be considered by the Commission in determining the appropriate action to be taken, but will not serve to make protestants parties to the proceeding. Copies of this filing are on file with the Commission and are available for public inspection in the Public Reference Room.

Lois D. Cashell,

Secretary.

[FR Doc. 97–17823 Filed 7–8–97; 8:45 am]

BILLING CODE 6717–01–M

DEPARTMENT OF ENERGY

Federal Energy Regulatory Commission

[Docket No. RP97–129–005]

Questar Pipeline Company; Notice of Tariff Filing

July 2, 1997.

Take notice that on June 30, 1997, Questar Pipeline Company submitted for filing and acceptance to be effective June 1, 1997, Second Substitute Original Sheet No. 75B to First Revised Volume No. 1 of its FERC Gas Tariff.

Questar explains that this tariff sheet corrects the pagination of Sheet No. 75B when resubmitted by Questar on June 18, 1997. Questar requested that Second Substitute Original Sheet No. 75B be inserted into, and considered part of, Questar's May 27 compliance filing.

Any person desiring to protest said filing should file a protest with the Federal Energy Regulatory Commission, 888 First Street, N.E., Washington, D.C. 20426, in accordance with Section 385.211 of the Commission's Rules of Practice and Procedure. All such protests must be filed in accordance with Section 154.210 of the Commission's Regulations. Protests will be considered by the Commission in determining the appropriate action to be taken, but will not serve to make protestants parties to the proceeding. Copies of this filing are on file with the Commission and are available for public inspection.

Lois D. Cashell,

Secretary.

[FR Doc. 97–17824 Filed 7–8–97; 8:45 am]

BILLING CODE 6717–01–M

DEPARTMENT OF ENERGY

Federal Energy Regulatory Commission

[Docket No. GT97–47–000]

Tennessee Gas Pipeline Company; Notice of Refund Report

July 2, 1997.

Take notice that on June 27, 1997, Tennessee Gas Pipeline Company (Tennessee) filed a refund report pursuant to Ordering Paragraph (c) of the Commission's February 22, 1995, order in Gas Research Institute (GRI), Docket No. RP95–124–000.

Tennessee states that Tennessee received a refund from GRI in the amount of $1,706,738.

Tennessee states that it has refunded amounts to firm transportation customers that received nondiscounted service during 1996 by adjustments to their June invoices.

Tennessee states that copies of this filing have been mailed to each of Tennessee's customers and interested state commissions.

Any person desiring to be heard or to protect this filing should file a motion to intervene or protest with the Federal Energy Regulatory Commission, 888 First Street, Washington, D.C. 20426, in accordance with 18 CFR Sections 385.211 and 385.214 of the Commission's Regulations. All such motions or protests must be filed on or before July 9, 1997. Protests will be considered by the Commission in determining the appropriate action to be taken, but will not serve to make protestants parties to the proceeding. Any person wishing to become a party must file a motion to intervene. Copies of this filing are on file with the Commission and available for public inspection in the Public Reference Room.

Lois D. Cashell,

Secretary.

[FR Doc. 97–17804 Filed 7–8–97; 8:45 am]

BILLING CODE 6717–01–M

DEPARTMENT OF ENERGY

Federal Energy Regulatory Commission

[Docket No. GT97–53–000]

Tennessee Gas Pipeline Company; Notice of Filing of Notice Of Termination Of Service Contract

July 2, 1997.

Take notice that on June 27, 1997, Tennessee Gas Pipeline Company (Tennessee) tendered for filing a Notice of Termination of Contract and Service under Rate Schedule NET to Flagg Energy Development Corporation (Flagg). Tennessee states that it proposes to terminate the service to and contract with Flagg on July 27, 1997.

Tennessee asserts that Flagg has indicated it will not pay for the service and that in these circumstances Tennessee has the right to terminate upon 30 days notice pursuant to the provisions of Tennessee's FERC Gas Tariff.

Any person desiring to be heard or to protest this filing should file a motion to intervene or protest with the Federal Energy Regulatory Commission, Washington, D.C. 20426, in accordance with Sections 385.214 and 385.211 of the Commission's rules and regulations. All such motions or protests must be filed on or before July 9, 1997. Protests will be considered by the Commission in determining the appropriate action to be taken, but will not serve to make protestants parties to the proceeding. Any person wishing to become a party must file a motion to intervene. Copies of this filing are on file with the Commission and are available for public inspection in the Public Reference Room.

Lois D. Cashell,

Secretary.

[FR Doc. 97–17833 Filed 7–8–97; 8:45 am]

BILLING CODE 6717–01–M

DEPARTMENT OF ENERGY

Federal Energy Regulatory Commission

[Docket No. CP97–605–000]

Texas Gas Transmission Corporation; Notice of Request Under Blanket Authorization

July 2, 1997.

Take notice that on June 26, 1997, Texas Gas Transmission Corporation (Applicant) P.O. Box 20008, Owensboro, Kentucky 42304, filed in Docket No. CP97–605–000 for approval under Sections 157.205 and 157.212 of the Commission's Regulations to replace a measurement facility, used in providing service to the City of Olive Branch, Mississippi. Applicant proposes to take this action under its blanket certificate issued in Docket No. CP82–407–000, all as more fully set forth in the request which is on file with the Commission and open to public inspection.

Applicant proposes to replace the 2-inch meter runs with 3-inch meter runs at the City of Olive Branch's Delivery Point in Shelby County, Tennessee. Applicant states that this is being done to provide more accurate measurement for deliveries to Olive Branch at this point. The cost of replacing the meter runs is estimated to be $34,700.

Applicant states that no increase in contract quantity has been requested by Olive Branch. Applicant also states that this proposal will have no significant effect on Applicant's peak day and annual deliveries.

Any person or the Commission's staff may, within 45 days after issuance of the instant notice by the Commission, file pursuant to Rule 214 of the Commission's Procedural Rules (18 CFR 385.214) a motion to intervene or notice of intervention and pursuant to Section 157.205 of the Regulations under the Natural Gas Act (18 CFR 157.205) a protest to the request. If no protest is filed within the time allowed therefore, the proposed activity shall be deemed to be authorize effective the day after the time allowed for filing a protest. If a protest is filed and not withdrawn within 30 days after the time allowed for filling a protest, the instant request shall be treated as an application for authorization pursuant to Section 7 of the Natural Gas Act.

Lois D. Cashell,

Secretary.

[FR Doc. 97–17839 Filed 7–8–97; 8:45 am]

BILLING CODE 6717–01–M

DEPARTMENT OF ENERGY

Federal Energy Regulatory Commission

[Docket No. RP97–146–004]

U–T Offshore System; Notice of Proposed Changes in FERC Gas Tariff

July 2, 1997.

Take notice that on June 30, 1997, U–T Offshore System (U–TOS), tendered for filing as part of its FERC Gas Tariff, Second Revised Volume No. 1, the following tariff sheet to be effective August 1, 1997:

First Revised Sheet No. 73A

U–TOS states that the tariff sheet is filed to comply with the Commission's directive in its June 13, 1997 letter order in the captioned proceeding. U–TOS further states that copies of the filing were served on all affected entities.

Any person desiring to protest this filing should file a protest with the Federal Energy Regulatory Commission, 888 First Street, NE, Washington, DC 20426, in accordance with Section 385.211 of the Commission's Rules of Practice and Procedure. All such protests must be filed in accordance with Section 154.210 of the Commission's Regulations. Protests will be considered by the Commission in determining the appropriate action to be taken, but will not serve to make protestants parties to the proceeding. Copies of this filing are on file and available for public inspection in the Public Reference Room.

Lois D. Cashell,

Secretary.

[FR Doc. 97–17822 Filed 7–8–97; 8:45 am]

BILLING CODE 6717–01–M

DEPARTMENT OF ENERGY

Federal Energy Regulatory Commission

[Docket No. RP97–401–000]

Viking Gas Transmission Company; Notice of Filing and Refund Report

July 2, 1997.

Take notice that on June 27, 1997, Viking Gas Transmission Company (Viking) tendered for filing as part of its FERC Gas Tariff, First Revised Volume No. 1, Eighth Revised Sheet No. 6, proposed to be effective October 1, 1996 and a refund report labeled ''Expansion Contracts Demand Revenue Adjustments'' that details refunds Viking made to its Rate Schedule FT–B expansion customers.

Viking states that the purpose of this filing is to comply with the the Commission's May 15, 1996 ''Order Issuing Certificate'' in Docket No. CP96–32–000, 75 FERC ¶ 61,154 (''May 15, 1996 Order'') that Viking: (1) Make a limited Section 4 filing under the Natural Gas Act, 15 U.S.C. § 717c (1994), to ''true-up'' the initial incremental demand rate of $7.75 Dth/month approved in Docket No. CP96–32–000 for Viking's Rate Schedule FT–B expansion service and (2) refund the difference between the initial and trued-up rates for Rate Schedule FT–B expansion service to its customers.

Viking states that Eighth Revised Sheet No. 6 reflects Viking's trued-up rates for its Rate Schedule FT–B expansion service. Viking is also filing updates to exhibits that Viking filed on October 24, 1995 in Docket No. CP96–32–000 as part of its ''Abbreviated Application for a Certificate of Public Convenience and Necessity.'' These updates reflect the differences between the costs underlying Viking's initial and trued-up rates for Rate Schedule FT–B expansion service as well as the development of Viking's trued-up Rate Schedule FT–B expansion rates.

Viking's also states that the refund report details the refunds and interest owed to Viking' Rate Schedule FT–B expansion customers. Viking refunded these amounts to its Rate Schedule FT–B expansion customers on June 12, 1997 by applying the refund amounts to its invoices for May 1997. Viking began invoicing based on its trued-up rates for services rendered in May 1997.

Viking states that copies of the filing have been mailed to all of its jurisdictional customers and to affected State regulatory commissions.

Any person desiring to be heard or to protest said filing should file a motion to intervene or protests with the Federal

Energy Regulatory Commission, 888 First Street, N.E., Washington, DC 20426, in accordance with rules 211 and 214 of the Commission's Rules of Practice and Procedure. All such motions or protests must be filed in accordance with Section 154.210 of the Commission's Regulations. Protests will be considered by the Commission in determining the appropriate action to be taken, but will not serve to make protestants parties to the proceeding. Any person wishing to become a party must file a motion to intervene. Copies of this filing are on file with the Commission and are available for public inspection.

Lois D. Cashell,

Secretary.

[FR Doc. 97–17817 Filed 7–8–97; 8:45 am]

BILLING CODE 6717–01–M

DEPARTMENT OF ENERGY

Federal Energy Regulatory Commission

[Docket No. RP97–254–002]

Williams Natural Gas Company; Notice of Refund Report

July 2, 1997.

Take notice that on June 27, 1997, Williams Natural Gas Company (WNG) tendered for filing a refund report, pursuant to Commission order issued May 20, 1997, in the above referenced docket, and WNG's report of penalty revenue filed February 18, 1997.

WNG states that the May 20 order directed WNG to make refunds within 15 days of the receipt of the order. WNG made such refunds on June 4, 1997. The order further directed WNG to make the confidential documents available to MGE and to inform the Commission of the date on which that occurred. MGE received the confidential documents on June 5, 1997. A letter was filed on June 6, 1997 informing the Commission that MGE had received the documents on June 5, 1997.

MGE was directed to file any comments with the Commission within 15 days from the date it received the confidential material. In the event MGE filed no comments, WNG was directed to file its final refund report within 7 days after the expiration of the 15 days. No comments were filed by MGE, therefore, WNG is hereby filing its refund report.

WNG states that a copy of its filing was served on all jurisdictional customers and interested State commissions.

Any person desiring to protest this filing should file a protest with the Federal Energy Regulatory Commission, 888 First Street NE., Washington, DC 20426, in accordance with Section 385.211 of the Commission's Rules and Regulations. All such protests must be filed as provided in Section 154.210 of the Commission's Regulations. Protests will be considered by the Commission in determining the appropriate action to be taken, but will not serve to make protestants parties to the proceedings. Copies of this filing are on file with the Commission are available for public inspection in the Public Referenced Room.

Lois D. Cashell,

Secretary.

[FR Doc. 97–17820 Filed 7–8–97; 8:45 am]

BILLING CODE 6717–01–M

DEPARTMENT OF ENERGY

Federal Energy Regulatory Commission

[Docket No. GT97–49–000]

Williston Basin Interstate Pipeline Company; Notice of Refund Report

July 2, 1997.

Take notice that on June 27, 1997, Williston Basin Interstate Pipeline Company (Williston Basin) tendered for filing with the Commission its Refund Report for 1996 Gas Research Institute (GRI) overcollections in compliance with the Commission's ''Order Approving Refund Methodology for 1994 Overcollections'' issued February 22, 1995 in GRI's Docket No. RP95–124–000.

Williston Basin states that on April 25, GRI filed with the Commission its ''Report on Refunds'' in Docket No. RP97–340–000 in which it reported $222,797.00 was refunded to Williston Basin for 1996 GRI overcollections.

In addition, Williston Basin states that on June 13, 1997, refunds totaling ι22,797.00 were mailed to its applicable firm transportation shippers. Such refunds were based on the proportion of each applicable firm shipper's demand and commodity GRI charges paid during the 1996 calendar year to the total applicable firm shippers' GRI charges paid during the 1996 calendar year.

Any person desiring to be heard or to protest said filing should file a motion to intervene or protest with the Federal Energy Regulatory Commission, 888 First Street N.E., Washington, D.C. 20426, in accordance with Rules 211 ad 214 of the Commission's Rules of Practice and Procedure (Sections 385.211 and 385.214). All such motions or protests should be filed on or before July 9, 1997. Protests will be considered by the Commission in determining the appropriate action to be taken, but will not serve to make the protestants parties to the proceeding. Any person wishing to become a party to the proceeding must file a motion to intervene. Copies of the filing are on file with the Commission and are available for public inspection.

Lois D. Cashell,

Secretary.

[FR Doc. 97–17837 Filed 7–8–97; 8:45 am]

BILLING CODE 6717–01–M

DEPARTMENT OF ENERGY

Notice of Issuance of Decisions and Orders by the Office of Hearings and Appeals

Week of June 2 Through June 6, 1997

During the week of June 2 through June 6, 1997, the decisions and orders summarized below were issued with respect to appeals, applications, petitions, or other requests filed with the Office of Hearings and Appeals of the Department of Energy. The following summary also contains a list of submissions that were dismissed by the Office of Hearings and Appeals.

Copies of the full text of these decisions and orders are available in the Public Reference Room of the Office of Hearings and Appeals, Room 1E–234, Forrestal Building, 1000 Independence Avenue, SW, Washington, D.C. 20585–0107, Monday through Friday, between the hours of 1:00 p.m. and 5:00 p.m., except federal holidays. They are also available in Energy Management: Federal Energy Guidelines, a commercially published loose leaf reporter system. Some decisions and orders are available on the Office of Hearings and Appeals World Wide Web site at http://www.oha.doe.gov.

Dated: July 1, 1997.

George B. Breznay,

Director, Office of Hearings and Appeals.

DEPARTMENT OF ENERGY

Office of Hearings and Appeals

[Decision List No. 36]

Appeal

Information Focus on Energy, Inc., 6/6/97, *VFA–0293*

DOE granted in part and denied in part an appeal of the withholding of information in a determination by the Ohio Field Office. OHA found that some of the information was properly withheld under Exemption 6, but regarding one document, OHA

remanded the request for release of non-exempt information.

Personnel Security Hearing

Personnel Security Hearing, 6/4/97, VSO–0130

A Hearing Officer issued an Opinion regarding the eligibility of an individual to maintain an access authorization under the provisions of 10 CFR part 710. The DOE Personnel Security Division alleged that the individual is a user of alcohol habitually to excess, or has been diagnosed by a board-certified psychiatrist as alcohol dependent or as suffering from alcohol abuse. *See* 10 CFR § 710.8(j). The parties convened for an evidentiary hearing in which nine witnesses testified. After carefully examining the record of the proceeding, the Hearing Officer determined that the individual had demonstrated that he is sufficiently rehabilitated and reformed from his past alcohol abuse problems. Accordingly, the Hearing Officer recommended that DOE Security restore the individual's access authorization.

Refund Applications

The Office of Hearings and Appeals issued the following Decisions and Orders concerning refund applications, which are not summarized. Copies of the full texts of the Decisions and Orders are available in the Public Reference Room of the Office of Hearings and Appeals.

Breman's Express Co	RG272–83	6/4/97
C.J. Vignolo Farms	RG272–74	6/5/97
Maxine Vancloostere	RK272–2007	6/4/97
Nabors Drilling USA, Inc et al	RK272–03672	6/5/97
Rufus Morrison, Sr. et al	RF272–38479	6/5/97

Dismissals

The following submissions were dismissed.

Name	Case No.
Chilcote, Inc	RG272–00684
H.C. Oil Company	RR340–00004
Mystic Fuel, Inc	RR300–00284

[FR Doc. 97–17892 Filed 7–8–97; 8:45 am]

BILLING CODE 6450–01–P

DEPARTMENT OF ENERGY

Notice of Issuance of Decisions and Orders by the Office of Hearings and Appeals

Week of June 9 Through June 13, 1997

During the week of June 9 through June 13, 1997, the decisions and orders summarized below were issued with respect to appeals, applications, petitions, or other requests filed with the Office of Hearings and Appeals of the Department of Energy. The following summary also contains a list of submissions that were dismissed by the Office of Hearings and Appeals.

Copies of the full text of these decisions and orders are available in the Public Reference Room of the Office of Hearings and Appeals, Room 1E–234, Forrestal Building, 1000 Independence Avenue, SW, Washington, D.C. 20585–0107, Monday through Friday, between the hours of 1:00 p.m. and 5:00 p.m., except federal holidays. They are also available in Energy Management: Federal Energy Guidelines, a commercially published loose leaf reporter system. Some decisions and orders are available on the Office of Hearings and Appeals World Wide Web site at http://www.oha.doe.gov.

Dated: July 1, 1997.

George B. Breznay,

Director, Office of Hearings and Appeals.

DEPARTMENT OF ENERGY

Office of Hearings and Appeals

[Decision List No. 37]

Appeals

Information Focus on Energy, Inc., 6/12/97, *VFA–0295*

The DOE issued a Decision and Order denying a Freedom of Information Act (FOIA) Appeal that was filed by Information Focus on Energy (IFOE). In its Appeal, IFOE sought access to information that was withheld by the DOE's Office of General Counsel pursuant to the attorney work product privilege of Exemption 5. The withheld information consisted of the amounts of settlements negotiated in lawsuits involving DOE contractors. The DOE determined that this information was properly withheld under Exemption 5, and that release of the information was not in the public interest.

Sandra Clayton, 6/13/97, *VFA–0289*

The DOE denied a Freedom of Information Act (FOIA) Appeal filed by Sandra Clayton. Clayton sought information concerning an investigation of sexual harassment allegedly conducted at the Western Area Power Administration (WAPA). The DOE found that WAPA's use of the Glomar response, neither confirming or denying the existence of relevant material, was appropriate under FOIA Exemption 6. The DOE found no overriding public interest in disclosure, and further concluded that the release of any information would constitute a clearly unwarranted invasion of the personal privacy of anyone allegedly involved. Accordingly, the Appeal was denied.

Personnel Security Hearing

Personnel Security Hearing, 6/10/97, *VSO–0132*

A Hearing Officer issued an Opinion regarding the eligibility of an individual for access authorization under the provisions of 10 CFR Part 710. After considering the record, the Hearing Officer found that the individual had demonstrated financial irresponsibility for approximately 12 years and that this conduct, as specified by 10 CFR § 710.8(l) (Criterion L), indicated that the individual (i) may not be honest, reliable or trustworthy or (ii) may be subject to pressure, coercion, exploitation or duress.

At the hearing, the individual presented some evidence that in the past 6 months he had changed the manner in which he had handled his financial affairs. However, the Hearing Officer concluded that the individual had not presented evidence sufficient to conclude that the individual had reformed his conduct regarding his

financial affairs. Accordingly, the Hearing Officer recommended that the individual's access authorization not be restored.

Refund Application

Eason Oil Company/Presidio Exploration, Inc., 6/11/97, *RF352–9*

The DOE granted an application for refund submitted by Presidio Exploration, Inc. (Presidio) in the Eason Oil Company (Eason) special refund proceeding, based on purchases by Home Petroleum Company (Home). Home was a reseller that purchased truck load lots of butane and propane from Eason, its base period supplier. The DOE concluded that Home's butane and propane purchases from Eason probably were not discretionary in nature, but were dictated by Home's requirements for supplying its regular customers. The DOE granted Presidio a full volumetric refund for Home's butane purchases, based on a competitive disadvantage analysis using imputed butane prices drawn from regional propane prices. The DOE limited Presidio's refund for Home's propane purchases from Eason to $5,776, Home's total gross excess cost for these purchases. Accordingly, the DOE granted Presidio a total refund, including interest, of $44,037.

Refund Applications

The Office of Hearings and Appeals issued the following Decisions and Orders concerning refund applications, which are not summarized. Copies of the full texts of the Decisions and Orders are available in the Public Reference Room of the Office of Hearings and Appeals.

Frank's Burner Service, Inc	RF272–57472	6/13/97
Gulf Oil Corporation/O.M. Johnson Gulf	RF300–16900	6/10/97
A.W. Strout, Inc	RF300–16923	.....
Hendries, Inc	RF300–21657	.....
Inland Transport Co	RF300–18794	.....
Hagglunds Denison Corp./MacGregor	RK272–04088	6/10/97
Luckey Farmers, Inc	RG272–75	6/10/97
Finland Cooperative Co	RG272–654	.....
Florence Cnty Coop	RR272–290	.....
Lydall, Inc.	RF272–18674	6/13/97
M & S Transport, Inc	RF272–57209	6/11/97
Patsy K. Manning et al	RK272–01476	6/11/97
Robert Sellhorst	RF272–15100	6/13/97
Sanitary Dairy of Sleepy Eye et al	RK272–04247	6/13/97
Stone Container Corporation	RK272–04304	6/13/97
Tate Logistics, Inc	RK272–01868	6/13/97
W.R. Grace & Co	RG272–793	6/13/97
White Heavy Haulers, Inc	RG272–606	6/11/97

Dismissals

The following submissions were dismissed.

Name	Case No.
Cherry Hill Processing, Inc	RK272–3739
County of Bergen	RG272–00536
Hennenpin Co-op Seed Exchange	RK272–03403
Leckie Smokeless Coal Co	RK272–03367
Ranger Truck Lines, Inc	RF272–76441
Roderick L. Ott	VFA–0296
Schrof Oil Company	RF300–20195
Valley Steel Products Co	RK272–3732

[FR Doc. 97–17893 Filed 7–8–97; 8:45 am]

BILLING CODE 6450–01–P

ENVIRONMENTAL PROTECTION AGENCY

[FRL–5855–3]

Underground Injection Control Program; Hazardous Waste Injection Restrictions; Petition for Exemption—Class I Hazardous Waste Injection; Texas Ecologist, Inc., (TECO)

AGENCY: Environmental Protection Agency.

ACTION: Notice of final decision on petition modification.

SUMMARY: Notice is hereby given that modification of an exemption to the land disposal restrictions under the 1984 Hazardous and Solid Waste Amendments to the Resource Conservation and Recovery Act has been granted to TECO, for the Class I injection well located at Robstown, Texas. As required by 40 CFR Part 148, the company has adequately demonstrated to the satisfaction of the Environmental Protection Agency by petition and supporting documentation that, to a reasonable degree of certainty, there will be no migration of hazardous constituents from the injection zone for as long as the waste remains hazardous. This final decision allows the underground injection by TECO, of the specific restricted hazardous waste identified in the exemption modification, into the Class I hazardous waste injection well at the Robstown, Texas facility specifically identified in the modified exemption, for as long as the basis for granting an approval of this exemption remains valid, under provisions of 40 CFR 148.24. As required by 40 CFR 124.10, a public notice was issued July 31, 1996, and closed on September 16, 1996, and was reopened on October 10, 1996, a public meeting and hearing was held on November 19, 1996 and the comment period was closed on December 2, 1996. The comment period was again reopened on February 5, 1997, and closed on March 24, 1997. All comments have been addressed and have been considered in the final

decision. This decision constitutes final Agency action and there is no Administrative appeal.

DATES: This action is effective as of June 27, 1997.

ADDRESSES: Copies of the modified petition and all pertinent information relating thereto are on file at the following location: Environmental Protection Agency, Region 6, Water Quality Protection Division, Source Water Protection Branch (6WQ-S), 1445 Ross Avenue, Dallas, Texas 75202–2733.

FOR FURTHER INFORMATION CONTACT: Philip Dellinger, Chief, Ground Water/ UIC Section, EPA—Region 6, telephone (214) 665–7165.

Joan E. Brown,

Acting Director, Water Quality Protection Division (6WQ).

[FR Doc. 97–17954 Filed 7–8–97; 8:45 am]

BILLING CODE 6560–50–U

ENVIRONMENTAL PROTECTION AGENCY

[OPP–00473A; FRL–5731–2]

Antimicrobial Rule Development; Stakeholder Meetings

AGENCY: Environmental Protection Agency (EPA).

ACTION: Notice of Public Meeting.

SUMMARY: The Antimicrobial Division (AD) of the Office of Pesticide Programs of EPA is continuing its series of stakeholder meetings to obtain views about the antimicrobial rule that is being developed. The rule is being revised in accordance with principles set forth in the Food Quality Protection Act of 1996 (Public Law 104–170). To ensure that all interested parties can obtain information about activities related to developing this rule, EPA, in its discretion, has opened a docket in advance of the rule's proposal. This docket includes, but is not limited to, a summary of major discussions at stakeholder meetings, as well as copies of any documents distributed at these meetings.

DATES: The next stakeholder meetings will take place on Tuesday, July 15, 1997; Thursday, September 11, 1997; Tuesday, October 21, 1997 from 2 p.m. to 5 p.m..

ADDRESSES: The meetings will be held in Rm. 1126 (''Fishbowl''), Crystal Mall #2, 1921 Jefferson Davis Highway, Arlington, VA.

FOR FURTHER INFORMATION CONTACT: By mail: Barbara Mandula, Antimicrobials Division (7510W), U.S. Environmental Protection Agency, 401 M St., SW., Washington, DC 20460; Office location, telephone, fax, and e-mail address: Sixth Floor, Crystal Station #1, 2800 Crystal Drive, Arlington, VA 22202, 703–308–7378; fax: 703–308–6467(6); e-mail: mandula.barbara@epamail.epa.gov.

SUPPLEMENTARY INFORMATION: This notice announces a series of public meetings to ensure that all parties interested in the development of antimicrobial rules can obtain information about activities related to the development of this rule. Additionally, a public record has been established for development of the antimicrobial rule under docket number ''OPP–00473A.'' The docket is available for inspection from 8:30 a.m. to 4 p.m., Monday through Friday, excluding legal holidays. The public record is located in Room 1132 Bay of the Public Response and Program Resources Branch, Field Operations Division (7506C), Office of Pesticide Programs, Environmental Protection Agency, Crystal Mall #2, 1921 Jefferson Davis Highway, Arlington, VA. Copies of EPA documents may be obtained by contacting: Public Response and Program Resources Branch, Field Operations Division (7506C), Office of Pesticide Programs, Environmental Protection Agency, 401 M St., SW., Washington, DC 20460.

List of Subjects

Environmental protection.

Dated: July 3, 1997.

William L. Jordan,

Acting Director, Antimicrobials Division, Office of Pesticide Programs.

[FR Doc. 97–18083 Filed 7–8–97; 8:45 am]

BILLING CODE 6560–50–F

ENVIRONMENTAL PROTECTION AGENCY

[FRL–5855–6]

Notice of Public Meeting on the Effluent Limitations Guidelines and Standards for the Centralized Waste Treatment Industry

AGENCY: Environmental Protection Agency (EPA).

ACTION: Notice of public meeting.

SUMMARY: The Office of Science and Technology (OST) within EPA's Office of Water (OW) is conducting a public meeting prior to re-proposing effluent limitations guidelines and standards for the Centralized Waste Treatment Industry. The EPA intends to re-propose effluent limitations guidelines and standards early next year, and this is the only public meeting that the Agency plans to sponsor prior to the re-proposal. EPA will report on the status of the regulatory development, and interested parties can provide information and ideas to the Agency on key technical, scientific, and economic issues.

DATES: The public meeting will be held on Tuesday, July 29, 1997, from 10:00 a.m. to 1:00 p.m.

ADDRESSES: The meeting will be held at the U.S. Environmental Protection Agency Auditorium, U.S. EPA Headquarters, Waterside Mall, 401 M Street SW., Washington, DC.

FOR FURTHER INFORMATION CONTACT: Jan Matuszko, Engineering and Analysis Division (4303), U.S. EPA, 401 M Street SW, Washington DC 20460. Telephone (202) 260-9126, FAX (202) 260–7185 or E-Mail matuszko.jan@epamail.epa.gov.

SUPPLEMENTARY INFORMATION: On January 27, 1995, under the the authority of the Clean Water Act (CWA), EPA proposed effluent limitations guidelines and pretreatment standards to reduce the discharge of pollutants from a category of industrial facilities described as the Centralized Waste Treatment Industry (60 FR 5464). The Centralized Waste Treatment Category includes facilities that accept, by any form of shipment, certain hazardous or non-hazardous industrial waste from off-site for treatment or recovery. On September 16, 1996, EPA published a notice of data availability describing revised estimates of the size and regulatory impacts of the proposed rulemaking on the proposed oils treatment and recovery subcategory of the industry (61 FR 48805). EPA plans to re-propose effluent limitations guidelines and standards for the Centralized Waste Treatment Industry in early 1998.

EPA has scheduled a public meeting to discuss the proposed regulation for Tuesday, July 29, 1997, from 10:00 a.m. to 1:00 p.m. The public meeting will include a discussion of the scope of the regulation, subcategorization, summary of industry information, preliminary plans for technology-based regulatory options, and other regulatory issues. The meeting is informational and will not be recorded by a reporter or transcribed for inclusion in the record for the Centralized Waste Treatment Industry rulemaking. Documents relating to the topics mentioned above and a more detailed agenda will be available at the meeting.

Dated: June 30, 1997.

James A. Hanlon,

Acting Director, Office of Science and Technology.

[FR Doc. 97–17944 Filed 7–8–97; 8:45 am]

BILLING CODE 6560–50–P

ENVIRONMENTAL PROTECTION AGENCY

[FRL–5855–5]

National Drinking Water Advisory Council; Notice of Open Meeting

Under Section 10(a)(2) of Pub. L. 92–423, ''The Federal Advisory Committee Act,'' notice is hereby given that a meeting of the National Drinking Water Advisory Council established under the Safe Drinking Water Act, as amended (42 U.S.C. 300f *et seq.*), will be held on July 21, 1997, from 2:00 p.m. until 5:00 p.m. and on July 25, 1997, from 2:00 p.m. until 5:00 p.m. at the U.S. Environmental Protection Agency's Headquarters, Room 1209 East Tower, 401 M Street, S.W., Washington, D.C. 20460. Members of the Council will be participating by conference call. The meeting is open to the public, but due to past experience, seating will be limited.

The purpose of the July 21, 1997, meeting is to provide the Council with the recommendations from the Occurrence and Contaminant Identification Working Group. The July 25, 1997, meeting is being held to provide the Council with the final recommendations on the draft rule from the Consumer Confidence Report Working Group.

The Council encourages the hearing of outside statements and will allocate one-half hour at each meeting for this purpose. Oral statements will be limited to five minutes, and it is preferred that only one person present the statement. Any outside parties interested in presenting an oral statement should petition the Council by telephone at (202) 260–2285 before July 18, 1997.

Any person who wishes to file a written statement can do so before or after a Council meeting. Written statements received prior to the meeting will be distributed to all members of the Council before any final discussion or vote is completed. Any statements received after the meeting will become part of the permanent meeting file and will be forwarded to the Council members for their information.

Members of the public that would like to attend the meeting, present an oral statement, or submit a written statement, should contact Ms. Charlene Shaw, Designated Federal Officer, National Drinking Water Advisory Council, U.S. EPA, Office of Ground Water and Drinking Water (4601), 401 M Street, SW, Washington, DC 20460. The telephone number is Area Code (202) 260–2285 or E-Mail, shaw.charlene@epamail.epa.gov.

Dated: July 1, 1997.

Robert J. Blanco,

Acting Director, Office of Ground Water and Drinking Water.

[FR Doc. 97–17945 Filed 7–8–97; 8:45 am]

BILLING CODE 6560–50–M

ENVIRONMENTAL PROTECTION AGENCY

[OPP–30428; FRL–5584–7]

N. Jonas Inc.; Approval of a Pesticide Product Conditional Registration

AGENCY: Environmental Protection Agency (EPA).

ACTION: Notice.

SUMMARY: This notice announces Agency approval of an application submitted by N. Jonas and Company, Incorporation, to conditionally register the pesticide product Sildate containing a new active ingredient not included in any previously registered product pursuant to the provisions of section 3(c)(7)(C) of the Federal Insecticide, Fungicide, and Rodenticide Act (FIFRA), as amended.

FOR FURTHER INFORMATION CONTACT: By mail: Vivian A. Turner, Acting Product Manager (PM) 32, Registration Division (7505C), Office of Pesticide Programs, 401 M St., SW., Washington, DC 20460. Office location and telephone number: Rm. 276, CM #2, Environmental Protection Agency, 1921 Jefferson Davis Hwy, Arlington, VA 22202, 703–305–6909; e-mail: turner.vivian@epamail.epa.gov.

SUPPLEMENTARY INFORMATION:

Electronic Availability: Electronic copies of this document and the Fact Sheet are available from the EPA home page at the Environmental Sub-Set entry for this document under ''Regulations'' (http://www.epa.gov/fedrgstr/).

EPA received an application from N. Jonas and Co., Inc., 4520 Adams Circle, Bensalem, PA 19020, to conditionally register the pesticide product Sildate (EPA File Symbol 3432–AU), containing the active ingredient tetrasilver tetroxide at 2.0 percent, an active ingredient not included in any previously registered product. However, since the notice of receipt of application was not published in **Federal Register**, as required by FIFRA, as amended, interested parties may submit written comments within 30 days from the date of publication of this notice. Comments and data may also be submitted electronically by sending electronic mail; e-mail: opp-docket@epamail.epa.gov. More detailed information is found in all documents requesting comments as of May 1995.

The application was approved on November 27, 1996, as Sildate for use as a disinfectant and germicide in swimming pools (EPA Registration Number 3432–64).

A conditional registration may be granted under section 3(c)(7)(C) of FIFRA for a new active ingredient where certain data are lacking, on condition that such data are received by the end of the conditional registration period and do not meet or exceed the risk criteria set forth in 40 CFR 154.7; that use of the pesticide during the conditional registration period will not cause unreasonable adverse effects; and that use of the pesticide is in the public interest.

The Agency has considered the available data on the risks associated with the proposed use of tetrasilver tetroxide, and information on social, economic, and environmental benefits to be derived from such use. Specifically, the Agency has considered the nature and its pattern of use, application methods and rates, and level and extent of potential exposure. Based on these reviews, the Agency was able to make basic health and safety determinations which show that use of tetrasilver tetroxide during the period of conditional registration will not cause any unreasonable adverse effect on the environment, and that use of the pesticide is, in the public interest.

This product is conditionally registered in accordance with FIFRA section 3(c)(7)(C). If the conditions are not complied with the registration will be subject to cancellation in accordance with FIFRA section 6(e). Jonas and Co., must make sure that all required studies are submitted under the terms of this conditional registration.

Consistent with section 3(c)(7)(C), the Agency has determined that this conditional registration is in the public interest. Use of the pesticides are of significance to the user community, and appropriate labeling, use directions, and other measures have been taken to ensure that use of the pesticides will not result in unreasonable adverse effects to man and the environment.

More detailed information on this conditional registration is contained in an EPA Pesticide Fact Sheet on tetrasilver tetroxide.

A copy of this fact sheet, which provides a summary description of the chemical, use patterns and formulations, science findings, and the

Agency's regulatory position and rationale, may be obtained from the National Technical Information Service (NTIS), 5285 Port Royal Road, Springfield, VA 22161.

In accordance with section 3(c)(2) of FIFRA, a copy of the approved label and the list of data references used to support registration are available for public inspection in the office of the Product Manager. The data and other scientific information used to support registration, except for material specifically protected by section 10 of FIFRA, are available for public inspection in the Public Response and Program Resources Branch, Field Operations Division (7506C), Office of Pesticide Programs, Environmental Protection Agency, Rm. 1132, CM #2, Arlington, VA 22202 (703–305–5805). Requests for data must be made in accordance with the provisions of the Freedom of Information Act and must be addressed to the Freedom of Information Office (A-101), 401 M St., SW., Washington, D.C. 20460. Such requests should: (1) Identify the product name and registration number and (2) specify the data or information desired.

Authority: 7 U.S.C. 136.

List of Subjects

Environmental protection, Pesticides and pests, Product registration.

Dated: June 25, 1997.

James Jones,

Acting Director, Registration Division, Office of Pesticide Programs.

[FR Doc. 97–17479 Filed 7–8–97; 8:45 am]

BILLING CODE 6560–50–F

ENVIRONMENTAL PROTECTION AGENCY

[FRL–5853–8]

Proposed Prospective Purchaser Agreement Pursuant to the Comprehensive Environmental Response, Compensation and Liability Act of 1980, as Amended by the Superfund Amendments and Reauthorization Act

AGENCY: Environmental Protection Agency.

ACTION: Notice; request for public comment.

SUMMARY: Notice is hereby given that a proposed prospective purchaser agreement associated with the Prier Brass Superfund Site, located in Kansas City, Missouri, was executed by the Agency on May 8, 1997, and concurred upon by the United States Department of Justice on June 16, 1997. This agreement is subject to final approval after the comment period. The Prospective Purchaser Agreement would resolve certain potential EPA claims under the Comprehensive Environmental Response, Compensation and Liability Act of 1980, as amended by the Superfund Amendments and Reauthorization Act of 1986 (''CERCLA''), against CST, L.L.P., the prospective purchaser (''the purchaser'').

The settlement would require the purchaser to pay EPA $50,000.00 in consideration for the property and to maintain the protective cover at the Site. The purchaser must record a deed restriction limiting use of the property to industrial and commercial uses and must provide EPA unlimited access to the Site.

For thirty (30) days following the date of publication of this notice, the Agency will receive written comments relating to the proposed settlement. The Agency's response to any comments received will be available for public inspection at the U.S. Environmental Protection Agency, Region VII, 726 Minnesota Avenue, Kansas City, Kansas 66101.

DATES: Comments must be submitted on or before August 8, 1997.

ADDRESSES: The proposed settlement is available for public inspection at the U.S. Environmental Protection Agency, Region VII, 726 Minnesota Avenue, Kansas City, Kansas 66101. A copy of the proposed agreement may be obtained from Timothy Curry, On-Scene Coordinator, U.S. Environmental Protection Agency, Region VII, 726 Minnesota Avenue, Kansas City, Kansas 66101. Comments should reference the ''Prier Brass Superfund Site Prospective Purchaser Agreement'' and should be forwarded to Timothy Curry, On-Scene Coordinator, at the above address.

FOR FURTHER INFORMATION CONTACT: Timothy Curry, On-Scene Coordinator, Superfund Division, United States Environmental Protection Agency, Region VII, 726 Minnesota Avenue, Kansas City, Kansas 66101, (913) 551–7636.

May 16, 1997.

William Rice,

Acting Regional Administrator.

[FR Doc. 97–17942 Filed 7–8–97; 8:45 am]

BILLING CODE 6560–50–M

FEDERAL COMMUNICATIONS COMMISSION

Notice of Public Information Collections Submitted to OMB for Review and Approval

July 1, 1997.

SUMMARY: The Federal Communications Commission, as part of its continuing effort to reduce paperwork burden invites the general public and other Federal agencies to take this opportunity to comment on the following proposed and/or continuing information collections, as required by the Paperwork Reduction Act of 1995, Public Law 104–13. An agency may not conduct or sponsor a collection of information unless it displays a currently valid control number. No person shall be subject to any penalty for failing to comply with a collection of information subject to the Paperwork Reduction Act (PRA) that does not display a valid control number. Comments are requested concerning (a) whether the proposed collection of information is necessary for the proper performance of the functions of the Commission, including whether the information shall have practical utility; (b) the accuracy of the Commission's burden estimates; (c) ways to enhance the quality, utility, and clarity of the information collected, and (d) ways to minimize the burden of the collection of information on the respondents, including the use of automated collection techniques or other forms of information technology.

DATES: Written comments should be submitted on or before August 8, 1997. If you anticipate that you will be submitting comments, but find it difficult to do so within the period of time allowed by this notice, you should advise the contact listed below as soon as possible.

ADDRESSES: Direct all comments to Judy Boley, Federal Communications Commission, Room 234, 1919 M St., NW., Washington, DC 20554 or via internet to jboley@fcc.gov and Timothy Fain, OMB Desk Officer, 10236 NEOB 725 17th Street, NW., Washington, DC 20503 or fain__t@a1.eop.gov.

FOR FURTHER INFORMATION CONTACT: For additional information or copies of the information collections contact Judy Boley at 202–418–0214 or via internet at jboley@fcc.gov.

SUPPLEMENTARY INFORMATION:

OMB Approval No.: 3060–0319.

Title: Application for Assignment of Authorization or Consent to Transfer of Control of Licensee.

Form No.: FCC 490.

Type of Review: Revision of an existing collection.

Respondents: Businesses or other for profit.

Number of Respondents: 28,500.

Estimate Hour Per Response: .5–3 hours per respondent. The Commission estimates 75% of the respondents will hire a consultant to prepare the required information. The estimated time for coordinating with these consultants is 30 minutes per respondent. The estimated time for the remaining 25% of the respondents to complete the collection is 3 hours per response.

Total Annual Burden: 32,063 hours.

Estimated Total Annual Costs: $14,125,312. This estimate includes costs incurred by 75% of the respondents hiring consultant to prepare the required information. The estimated costs for hiring these consultants is $200 per hour. This total also includes a $45 filing fee per respondent.

Needs and Uses: FCC Form 490 is filed to solicit Commission approval to assign a radio station authorization to another party or to transfer control of a licensee. The requested information is used by the Commission in carrying out its duties set forth in sections 308, 298 and 310 of the Communications Act. This collection is being revised to account for the changes proposed in the Fifth Notice of Proposed Rulemaking, Use of the 220–222 MHz Band by the Private Land Mobile Radio Service, the Commission concluded that any holder of a Phase II EA, Regional or nationwide 220 MHz license will be permitted to partition portions of its authorization.

In this collection the Commission is also requesting generic approval from OMB to use this form in future disaggregation and partitioning for a variety of spectrum based services licensed by the Commission. Specific Rules will be adopted in Reports and Orders or by Public Notice for each service subject to disaggregation and partitioning. Please note the burden in this notice differs from the burden in the notice published 62 FR 17815, April 11, 1997. The Commission inadvertently calculated the earlier burden without including estimates for respondents hiring consultants.

OMB Approval No.: 3060–0105.

Title: Licensee Qualification Report.

Form No.: FCC 430.

Type of Review: Revision of an existing collection.

Respondents: Businesses or other for profit.

Number of Respondents: 24,583.

Estimate Hour Per Response: .5–2 hours per respondent. The Commission estimates 75% of the respondents will hire a consultant to prepare the required information. The estimated time for coordinating with these consultants is 30 minutes per respondent. The estimated time for the remaining 25% of the respondents to complete the collection is 2 hours per response.

Total Annual Burden: 21,511 hours.

Estimated Total Annual Costs: $7,374,900. This estimate includes costs incurred by 75% of the respondents hiring consultant to prepare the required information. The estimated costs for hiring these consultants is $200 per hour. This total also includes a $2.50 postal fee per respondent incurred by respondents filing manually.

Needs and Uses: FCC Form 430 enables the Commission to determine whether applicants are legally qualified to become or remain common carrier telecommunications licensees. If the information is not collected, the Commission would be unable to fulfill its responsibilities under the Communications Act to make a finding as to the legal qualifications of an applicant or licensee. To reduce paperwork applicants may submit letters in lieu of completing the FCC 430 in those cases in which there has been no change to any of the required information.. This collection is being revised to account for the changes proposed in the Fifth Notice of Proposed Rulemaking, Use of the 220–222 MHz Band by the Private Land Mobile Radio Service, the Commission concluded that any holder of a Phase II EA, Regional or nationwide 220 MHz license will be permitted to partition portions of its authorization.

In the Fifth Notice of Proposed Rulemaking, Redesignation of 27.5 GHz Frequency Band, Establishing Rules and Policies for LMDS the Commission proposed that this form be used to complete the disaggregation and partitioning of LMDS. In this collection the Commission is also requesting generic approval from OMB to use this form in future disaggregation and partitioning for a variety of spectrum based services licensed by the Commission. Specific Rules will be adopted in Reports and Orders or by Public Notice for each service subject to disaggregation and partitioning.

Please note the burden in this notice differs from the burden in the notice published 62 FR 17815, April 11, 1997. The Commission inadvertently calculated the earlier burden without including estimates for respondents hiring consultants.

Federal Communications Commission.

William F. Caton,

Acting Secretary.

[FR Doc. 97–17786 Filed 7–8–97; 8:45 am]

BILLING CODE 6712–01–P

FEDERAL EMERGENCY MANAGEMENT AGENCY

Open Meeting, Advisory Committee for the National Urban Search and Rescue Response System

AGENCY: Federal Emergency Management Agency (FEMA).

ACTION: Notice of open meeting.

SUMMARY: In accordance with section 10(a)(2) of the Federal Advisory Committee Act (Pub. L. 92–463, 5 U.S.C. App.), announcement is made of the following committee meeting:

Name: Advisory Committee for the National Urban Search and Rescue Response System.

Date of Meeting: July 17–18, 1997.

Place: Federal Emergency Management Agency, Regional Office Conference Room, 3003 Chamblee-Tucker Road, Atlanta, GA 30341.

Time: 9:00 a.m.–5:00 p.m.

Proposed Agenda: The committee will be provided with a program update that will address the recently completed System expansion activity, the February 1997 Report to Congress, the status of ongoing audits and program reviews, functional training and program support efforts, and Fiscal Year 1997 and 1998 budgets for the Urban Search and Rescue program. The committee will review, discuss, and develop final recommendations for the organization of the Advisory Committee working group structure and the decision making process. Other items for discussion may include sponsoring agency head involvement, authorizing legislation, functional training methodologies, and program strategic planning and budgeting.

An ethics briefing will also be conducted for participants.

The meeting will be open to the public with approximately 20 seats available on a first-come, first-served basis. All members of the public interested in attending should contact Mark R. Russo, at 202–646–2701.

Minutes of the meeting will be prepared and will be available for public viewing at the Federal Emergency Management Agency, Operations Division, 500 C Street, SW., Washington, DC 20472. Copies of the minutes will be available upon request 30 days after the meeting.

Dated: June 25, 1997.

Lacy E. Suiter,

Executive Associate Director, Response and Recovery Directorate.

[FR Doc. 97–17791 Filed 7–8–97; 8:45 am]

BILLING CODE 6718–02–M

FEDERAL RESERVE SYSTEM

Change in Bank Control Notices; Acquisitions of Shares of Banks or Bank Holding Companies

The notificants listed below have applied under the Change in Bank Control Act (12 U.S.C. 1817(j)) and § 225.41 of the Board's Regulation Y (12 CFR 225.41) to acquire a bank or bank holding company. The factors that are considered in acting on the notices are set forth in paragraph 7 of the Act (12 U.S.C. 1817(j)(7)).

The notices are available for immediate inspection at the Federal Reserve Bank indicated. The notices also will be available for inspection at the offices of the Board of Governors. Interested persons may express their views in writing to the Reserve Bank indicated for that notice or to the offices of the Board of Governors. Comments must be received not later than July 22, 1997.

A. Federal Reserve Bank of Atlanta (Lois Berthaume, Vice President) 104 Marietta Street, N.W., Atlanta, Georgia 30303-2713:

1. David E. Young, Chattanooga, Tennessee; to retain a total of 69.09 percent of the voting shares of East Ridge Bancshares, Inc., East Ridge, Tennessee, and thereby indirectly retain Bank of East Ridge, East Ridge, Tennessee.

Board of Governors of the Federal Reserve System, July 2, 1997.

Jennifer J. Johnson,

Deputy Secretary of the Board.

[FR Doc. 97–17782 Filed 7–8–97; 8:45 am]

BILLING CODE 6210–01–F

FEDERAL RESERVE SYSTEM

Formations of, Acquisitions by, and Mergers of Bank Holding Companies

The companies listed in this notice have applied to the Board for approval, pursuant to the Bank Holding Company Act of 1956 (12 U.S.C. 1841 *et seq.*) (BHC Act), Regulation Y (12 CFR Part 225), and all other applicable statutes and regulations to become a bank holding company and/or to acquire the assets or the ownership of, control of, or the power to vote shares of a bank or bank holding company and all of the banks and nonbanking companies owned by the bank holding company, including the companies listed below.

The applications listed below, as well as other related filings required by the Board, are available for immediate inspection at the Federal Reserve Bank indicated. The application also will be available for inspection at the offices of the Board of Governors. Interested persons may express their views in writing on the standards enumerated in the BHC Act (12 U.S.C. 1842(c)). If the proposal also involves the acquisition of a nonbanking company, the review also includes whether the acquisition of the nonbanking company complies with the standards in section 4 of the BHC Act. Unless otherwise noted, nonbanking activities will be conducted throughout the United States.

Unless otherwise noted, comments regarding each of these applications must be received at the Reserve Bank indicated or the offices of the Board of Governors not later than August 1, 1997.

A. Federal Reserve Bank of Richmond (A. Linwood Gill III, Assistant Vice President) 701 East Byrd Street, Richmond, Virginia 23261-4528:

1. Triangle Bancorp, Inc., Raleigh, North Carolina; to acquire 100 percent of the voting shares of Bank of Mecklenburg, Charlotte, North Carolina.

B. Federal Reserve Bank of Atlanta (Lois Berthaume, Vice President) 104 Marietta Street, N.W., Atlanta, Georgia 30303-2713:

1. Edison Bancshares, Fort Myers, Florida; to become a bank holding company by acquiring voting shares of Edison National Bank (in organization), Fort Myers, Florida.

Board of Governors of the Federal Reserve System, July 2, 1997.

Jennifer J. Johnson,

Deputy Secretary of the Board.

[FR Doc. 97–17781 Filed 7–8–97; 8:45 am]

BILLING CODE 6210–01–F

FEDERAL RESERVE SYSTEM

Notice of Proposals to Engage in Permissible Nonbanking Activities or to Acquire Companies that are Engaged in Permissible Nonbanking Activities

The companies listed in this notice have given notice under section 4 of the Bank Holding Company Act (12 U.S.C. 1843) (BHC Act) and Regulation Y, (12 CFR Part 225) to engage *de novo*, or to acquire or control voting securities or assets of a company that engages either directly or through a subsidiary or other company, in a nonbanking activity that is listed in § 225.28 of Regulation Y (12 CFR 225.28) or that the Board has determined by Order to be closely related to banking and permissible for bank holding companies. Unless otherwise noted, these activities will be conducted throughout the United States.

Each notice is available for inspection at the Federal Reserve Bank indicated. The notice also will be available for inspection at the offices of the Board of Governors. Interested persons may express their views in writing on the question whether the proposal complies with the standards of section 4 of the BHC Act.

Unless otherwise noted, comments regarding the applications must be received at the Reserve Bank indicated or the offices of the Board of Governors not later than August 1, 1997.

A. Federal Reserve Bank of Cleveland (Jeffrey Hirsch, Banking Supervisor) 1455 East Sixth Street, Cleveland, Ohio 44101-2566:

1. Peoples Bancorp, Inc., Marietta, Ohio; to acquire Gateway Bancorp, Inc., Catlettsburg, Kentucky, and thereby indirectly acquire Catlettsburg Federal Savings Bank, Catlettsburg, Kentucky, and thereby engage in operating a savings association, pursuant to § 225.28(b)(4)(ii) of the Board's Regulation Y.

Board of Governors of the Federal Reserve System, July 2, 1997.

Jennifer J. Johnson,

Deputy Secretary of the Board.

[FR Doc. 97–17780 Filed 7–8–97; 8:45 am]

BILLING CODE 6210–01–F

DEPARTMENT OF HEALTH AND HUMAN SERVICES

Office of Public Health and Science, HHS

U.S. Public Health Service Recommendations for Use of Antiretroviral Drugs During Pregnancy for Maternal Health and Reduction of Perinatal Transmission of Human Immunodeficiency Virus Type 1 in the United States; Request for Comment

AGENCY: Office of Public Health and Science, HHS.

ACTION: Notice.

SUMMARY: The Department of Health and Human Services, Office of Public Health and Science is establishing guidelines for use of antiretroviral drugs by HIV–1-infected pregnant women for maternal health indications and reduction of perinatal HIV–1 transmission.

DATES: Comments on the proposed guidelines must be received on or before August 8, 1997 in order to ensure that NIH will be able to consider the comments in preparing the final guidelines.

ADDRESSES: Written comments to this notice should be submitted to: The HIV/AIDS Treatment Information Service, P.O. Box 6303, Rockville, MD 20849–

6303. Only written comments will be accepted. After consideration of the comments, the final document will be published in the Centers for Disease Control and Prevention (CDC) ''Morbidity and Mortality Weekly Report'' (MMWR).

FOR FURTHER INFORMATION CONTACT: Copies of the ''U.S. Public HealthService Recommendations for Use of Antiretroviral Drugs During Pregnancy for Maternal Health and Reduction of Perinatal Transmission of Human Immunodeficiency Virus Type 1 in the United States'' are available from the National AIDS Clearinghouse (1–800–458–5231) and on the Clearinghouse Web site (http://www.cdcnac.org) and from the HIV/AIDS Treatment Information Service (1–800–448–0440; Fax: 301–519–6616; TTY: 1–800–243–7012) and on their Web site (http://www.hivatis.org).

SUPPLEMENTARY INFORMATION: The U.S. Public Health Service Task Force Recommendations for Use of Antiretroviral Drugs During Pregnancy for Maternal Health and Reduction of Perinatal Transmission of Human Immunodeficiency Virus Type 1 would update the 1994 guidelines developed by the U.S. Public Health Service for use of zidovudine (ZDV) to reduce the risk of perinatal human immunodeficiency virus (HIV) type 1 transmission.(MMWR 1994)

On May 9, 1997 the U.S. Public Health Service convened a ''Workshop on Antiretroviral Therapy to Reduce the Risk of Perinatal Transmission'' to review information related to use of antiretroviral drugs to reduce perinatal HIV transmission and for treatment of HIV infection in women in the United States. The medical, scientific, public health and bioethics communities and interested professional, community and advocacy organizations were represented. These guidelines represent a consensus of 35 expert consultants, including medical, public health, and bioethics specialists, HIV-infected women and AIDS advocacy organization representatives, who have reviewed and revised the document twice since that meeting. The document has also been sent for review by 22 representatives of professional and AIDS advocacy organizations.

In February 1994, the results of Pediatric AIDS Clinical Trials Group (PACTG) Protocol 076 demonstrated that ZDV chemoprophylaxis could reduce perinatal HIV–1 transmission by nearly 70%.(Connor 1994) Since that time, epidemiologic data have confirmed the efficacy of ZDV for reduction of perinatal transmission and extended this efficacy to children of women with advanced disease, low CD4 lymphocyte count and prior ZDV therapy. Additionally, there have been major advances in understanding the pathogenesis of HIV–1 infection and in the treatment and monitoring of HIV–1 disease. These advances have resulted in changes in standard antiretroviral therapy recommendations for HIV–1-infected adults in the United States to more aggressive combination drug regimens that maximally suppress viral replication. Although considerations related to pregnancy may factor into decisions as to timing and choice of therapy, pregnancy per se is not an adequate reason to defer standard therapy. There are unique considerations regarding use of antiretroviral drugs in pregnancy, including the potential need to alter dosing due to physiologic changes associated with pregnancy, the potential for adverse short- or long-term effects on the fetus and newborn, and effectiveness for reducing the risk of perinatal transmission. Data to address many of these considerations are not yet available. Therefore, offering antiretroviral therapy to an HIV–1-infected woman during pregnancy, whether primarily to treat her HIV–1 infection, primarily to reduce perinatal transmission, or for both purposes, should be accompanied by a discussion of the known and unknown short- and long-term benefits and risks of such therapy for her and her infant. Standard antiretroviral therapy should be discussed with and offered to HIV–1-infected pregnant women. Additionally, to prevent perinatal transmission, ZDV chemoprophylaxis should be incorporated into whatever antiretroviral regimen is offered. This document is intended to give the health care professional information for discussion with the woman to enable her to make an informed decision regarding use of antiretroviral drugs during pregnancy.

Introduction

In February 1994, PACTG Protocol 076 demonstrated that a 3-part regimen of ZDV could reduce the risk of mother to child HIV–1 transmission by nearly 70%.(Connor 1994) The regimen includes oral ZDV initiated at 14 to 34 weeks gestation and continuing throughout pregnancy, followed by intravenous ZDV during labor and oral administration of ZDV to the infant for 6 weeks after delivery (Table 1). In August 1994, a U.S. Public Health Service (USPHS) Task Force issued recommendations for use of ZDV for reduction of perinatal HIV–1 transmission (MMWR 1994), and in July 1995, the USPHS issued recommendations for universal prenatal HIV–1 counseling and HIV–1 testing with consent for all pregnant women in the U.S..(MMWR 1995) In the three years since these results became available, epidemiologic studies in the U.S. and France have demonstrated dramatic decreases in perinatal transmission following incorporation of the PACTG 076 ZDV regimen into general clinical practice. (Cooper 1996; Fiscus 1996; Fiscus 1997; Thomas 1997; Blanche 1997;Simonds 1996)

Since 1994 there have been major advances in understanding the pathogenesis of HIV–1 infection and in the treatment and monitoring of HIV–1 disease. It is now appreciated that the rapidity and magnitude of viral turnover during all stages of HIV–1 infection is much greater than previously recognized; plasma virions are estimated to have a mean half-life of only 6 hours.(Perelson 1996) Thus, current therapeutic interventions focus on early initiation of aggressive combination antiretroviral regimens to maximally suppress viral replication, preserve immune function, and reduce the development of resistance.(Havlir 1996) New, potent antiretroviral drugs which inhibit the protease enzyme of HIV–1 are now available. When a protease inhibitor is used in combination with nucleoside analogue reverse transcriptase inhibitors, plasma HIV–1 RNA levels may be reduced for prolonged periods of time to undetectable levels using current assays. Improved clinical outcome and survival have been observed in adults receiving such regimens. Additionally, more direct quantitation of viral load has become available through assays that measure HIV–1 RNA copy number; these assays have provided powerful new tools to assess disease stage and risk for progression as well as the effects of therapy. These advances have led to major changes in the standard of care for treatment and monitoring for HIV–1-infected adults in the United States.

There have also been advances in the understanding of the pathogenesis of perinatal HIV–1 transmission. It is now recognized that the majority of perinatal transmission likely occurs near to or during delivery.(Mofenson 1997) Additional data and follow-up are now available on infants and women enrolled in PACTG 076 demonstrating the short-term safety of the ZDV regimen, but new data from animal studies affirm the need for long-term follow-up of children with antiretroviral exposure *in utero*.

These developments have important implications for maternal and fetal health. Antiretroviral use in HIV–1 infected women during pregnancy must take into account two separate but elated issues: (1) Antiretroviral treatment of the woman's HIV infection, and (2) Antiretroviral chemoprophylaxis to reduce the risk of perinatal HIV–1 transmission. While ZDV chemoprophylaxis alone has been shown to significantly reduce the risk of perinatal transmission, antiretroviral monotherapy is now considered to be suboptimal for treatment of HIV infection, and combination drug therapy is the current standard of care when considering treatment of the woman's HIV infection in the United States. The USPHS Panel on Clinical Practices for Treatment of HIV Infection will soon release guidelines for use of antiretrovirals in infected adolescents and adults, including use of antiretrovirals for treatment of infected women who are pregnant.(Panel 1997) The current document will focus on antiretroviral chemoprophylaxis for reduction of perinatal transmission, and will review the special considerations regarding use of antiretroviral drugs in pregnant women; update the results of PACTG 076 and related clinical trials and epidemiologic studies; discuss use of HIV–1 RNA assays during pregnancy; and provide updated recommendations on antiretroviral chemoprophylaxis for the reduction of perinatal transmission.

These recommendations have been developed for use in the United States. Although perinatal HIV–1 transmission is an international problem, alternative strategies may be appropriate in other countries. The policy and practices in other countries regarding use of antiretroviral drugs for reduction of perinatal HIV–1 transmission may differ from these recommendations, and will depend on local considerations, including availability and cost of ZDV, access to facilities for safe intravenous infusions during labor, and alternative interventions that may be under evaluation in that area.

Special Considerations Regarding the use of Antiretroviral Drugs by HIV–1-Infected Pregnant Women and Their Infants

Treatment recommendations for HIV–1-infected pregnant women have been based on the belief that therapies of known benefit to women should not be withheld during pregnancy unless there are known adverse effects on the mother, fetus or infant and these adverse effects outweigh the benefit to the woman.(Minkoff 1997) Thus, given the absence of demonstrated risk and compelling evidence of therapeutic advantage, guidelines for optimal antiretroviral therapy in pregnant HIV–1-infected women should be the same as those delineated for non-pregnant adults. However, it must be realized that the potential impact of such therapy on the fetus and infant is unknown, and long-term follow-up is needed for children who have had exposure to antiretroviral drugs *in utero*. The decision to use any antiretroviral drug during pregnancy should be made by the woman following discussion with her health care provider regarding the known and unknown benefits and risks to her and her fetus.

Combination antiretroviral therapy, generally consisting of two nucleoside analogue reverse transcriptase inhibitors and a protease inhibitor, is the currently recommended standard treatment for non-pregnant HIV–1-infected adults with CD4 lymphocyte count <500/mm^3, HIV–1 RNA copy number >10,000/mL, or clinical symptoms of HIV disease. Pregnancy *per se* should not preclude use of optimal therapeutic regimens. However, recommendations regarding the choice of antiretroviral drugs for treatment of infected pregnant women are subject to unique considerations, including potential changes in dosing requirements due to the physiologic changes associated with pregnancy and the potential effects of the antiretroviral drug on the fetus and newborn.

Physiologic changes that occur during pregnancy may affect the kinetics of drug absorption, distribution, biotransformation and elimination in the pregnant woman, thereby affecting drug dose requirements. During pregnancy, gastrointestinal transit time becomes prolonged; body water and fat increase over gestation accompanied by increases in cardiac output, ventilation, and liver and renal blood flow; plasma protein concentrations decrease; renal sodium reabsorption increases; and there are changes in metabolic enzyme pathways in the liver. Placental transport of drugs, compartmentalization of drugs in the embryo/fetus and placenta, and biotransformation of drugs by the fetus and placenta as well as elimination of drugs by the fetus can also affect drug pharmacokinetics in the pregnant woman. Additional important considerations regarding drug use in pregnancy are the effects of the drug on the fetus and newborn, including the potential for teratogenicity, mutagenicity, or carcinogenicity, and the pharmacokinetics and toxicity of transplacentally-transferred drugs. The potential harm to the fetus from maternal ingestion of a specific drug depends not only on the drug itself, but the dose ingested, the gestational age at exposure, duration of exposure, the interaction with other agents to which the fetus is exposed, and to an unknown extent, the genetic makeup of the mother and fetus.

Information about the safety of drugs in pregnancy comes from animal toxicity data, anecdotal experience, registry data and clinical trials. There are currently minimal data available on the pharmacokinetics and safety of antiretrovirals during pregnancy for antiretrovirals other than ZDV. In the absence of data, drug choice needs to be individualized based on discussion with the woman and available data from preclinical and clinical testing of the individual drugs.

Preclinical data include *in vitro* and animal *in vivo* screening tests for carcinogenicity, clastogenicity/mutagenicity, and reproductive and teratogenic effects. It is important to recognize that the predictive value of such tests for adverse effects in humans is unknown. For example, of approximately 1,200 known animal teratogens, only about 30 are known to be teratogenic in humans. (Mills 1995) In addition to antiretroviral agents, many drugs commonly used to treat the consequences of HIV–1 infection may have positive findings on one or more of these screening tests. For example, acyclovir is positive on some *in vitro* carcinogenicity and clastogenicity assays and is associated with some fetal abnormalities in rats; however, data on human experience from the Acyclovir in Pregnancy Registry indicate no increased risk of birth defects in infants with *in utero* exposure to acyclovir to date. (MMWR 1993) Table 2 shows the FDA Pregnancy Category and available data regarding placental passage and long-term animal carcinogenicity studies for currently approved antiretroviral drugs.

Nucleoside Analogue Reverse Transcriptase Inhibitors

Of the five currently approved nucleoside analogue antiretrovirals, only ZDV and lamivudine (3TC) pharmacokinetics have been evaluated in clinical trials in human pregnancy to date. ZDV is well-tolerated in pregnancy at usual adult doses and in the full-term neonate at 2 mg per kg body weight orally every 6 hours, as observed in PACTG 076. A small phase I study in South Africa evaluated the safety and pharmacokinetics of 3TC alone or in combination with ZDV in 20 infected pregnant women starting at 38 weeks gestation through labor and given for 1 week following birth to their infants.

(Johnson 1996, Moodley 1997) The drug was well-tolerated in the women at the usual adult dose of 150 mg orally twice daily, had pharmacokinetics similar to those observed in non-pregnant adults, and no pharmacokinetic interaction with ZDV was observed. No data are currently available regarding the pharmacokinetics of 3TC administered earlier than 38 weeks gestation. The drug crossed the placenta, achieving comparable serum concentrations in the woman, umbilical cord and neonate, and no short-term adverse effects were observed in the neonates. Oral clearance of 3TC in infants at 1 week of age was prolonged compared to older pediatric populations (0.35 L per kg per hour compared to 0.64–1.1 L per kg per hour, respectively). There are currently no data on 3TC pharmacokinetics between 2–6 weeks of age, and the exact age at which 3TC clearance begins to approximate that in older children is not known. Based on these limited data, 3TC in a dose of 150 mg administered orally twice daily in pregnant HIV–1-infected women and 2 mg per kg body weight administered orally twice daily in their neonates (half the dose recommended for older children) is being evaluated in several phase I studies in combination with ZDV and other drugs in the U.S., and in a phase III perinatal prevention trial in Africa.

In rodent studies, prolonged, continuous high doses of ZDV administered to adult rodents have been associated with the development of noninvasive squamous epithelial vaginal tumors in 3% to 12% of females. (Ayers 1996) In humans, ZDV is extensively metabolized, and the major form of ZDV excreted in the urine is the glucuronide, whereas in mice, high concentrations of unmetabolized ZDV are excreted in the urine. It is hypothesized by scientists at Glaxo-Wellcome, Inc., the manufacturer of ZDV, that the vaginal tumors in mice may be a topical effect of chronic local ZDV exposure of the vaginal epithelium, resulting from reflux of urine containing highly concentrated ZDV from the bladder into the vagina. Consistent with this hypothesis, in a study conducted by Glaxo-Wellcome, Inc. in which 5 or 20 mg ZDV/mL saline was administered intravaginally to female mice, vaginal squamous cell carcinomas were observed in mice receiving the highest concentration. (Ayers 1996) No increase in the incidence of tumors in other organ sites has been seen in other studies of ZDV conducted in adult mice and rats. High doses of zalcitabine (ddC) have been associated with the development of thymic lymphomas in rodents. Long-term animal carcinogenicity screening studies in rodents administered ddI or 3TC are negative; similar studies for stavudine (d4T) have not been completed.

Two rodent studies evaluating the potential for transplacental carcinogenicity of ZDV have had differing results. In one ongoing study carried out by scientists at the National Cancer Institute, two very high daily doses of ZDV were administered during the last third of gestation in mice. The doses chosen for this study were near the maximum dose beyond which fetal toxicity would be observed and approximately 25 and 50 times greater than the daily dose given to humans, although the cumulative dose received by the pregnant mouse was similar to the cumulative dose received by a pregnant woman taking 6 months of ZDV.

In the offspring of ZDV-exposed pregnant mice at the highest dose level followed for 12 months, a statistically significant increase in lung, liver, and female reproductive organ tumors were observed; the investigators also documented incorporation of ZDV into the DNA in a variety of newborn mouse tissues, although this did not clearly correlate with the presence of tumors. The second study was carried out by scientists at Glaxo-Wellcome, Inc. In that study, pregnant mice were given one of several regimens of ZDV; doses were based on pharmacokinetic data in mice and humans and were intended to achieve blood levels somewhat higher (approximately 3-fold) than those achieved in clinical practice. The daily doses received by mice during gestation ranged from one-twelfth to one-fiftieth the daily doses received by mice in the previous study. Some of the offspring also received ZDV for varying periods of time over their lifespan. No increase in the incidence of tumors was observed in the offspring of these mice, except in those offspring that had received additional lifetime ZDV exposure in whom the previously noted vaginal tumors once again were noted.

The relevance of these data to humans is unknown. An expert panel convened by the National Institutes of Health in January 1997 to review these data concluded that the proven benefit of ZDV in reducing the risk of perinatal transmission outweighed the hypothetical concerns of transplacental carcinogenesis raised by the rodent study. The panel also concluded that the information regarding the theoretical risk of transplacental carcinogenesis should be discussed with all HIV-infected pregnant women in the course of counseling them on the benefits and potential risks of antiretroviral therapy during pregnancy, and emphasized the need for careful long-term follow-up of all children exposed *in utero* to antiretroviral drugs. It is important to recognize that transplacental carcinogenicity studies have not been performed for any of the other available antiretroviral drugs, and no long-term or transplacental animal carcinogenicity studies of combinations of antiretroviral drugs have been performed.

All of the nucleoside analogue antiretroviral drugs except didanosine (ddI) are classified as FDA Pregnancy Category C (see footnote to Table 2 for definitions); ddI is classified as Category B. While all the nucleoside analogues cross the placenta in primates, in primate and placental perfusion studies ddI and ddC undergo significantly less placental transfer (fetal/maternal drug ratios of 0.3 to 0.5) than do ZDV, d4T and 3TC (fetal/maternal drug ratios >0.7).

Non-Nucleoside Analogue Reverse Transcriptase Inhibitors

There are 2 FDA-approved non-nucleoside reverse transcriptase inhibitors, nevirapine and delavirdine. A phase I study in the U.S. evaluated the safety and pharmacokinetics of nevirapine in 7 HIV–1-infected pregnant women and their infants. Nevirapine was administered as a single 200 mg oral dose at the onset of labor, and as a single dose of 2 mg per kg body weight at 2–3 days of age to their infants. (Mirochnick 1997) The drug was well-tolerated by the women, crossed the placenta and achieved neonatal blood concentrations equivalent to that in the mother. No short-term adverse effects were observed in mothers or neonates. Elimination of nevirapine in the pregnant women in this study was prolonged (mean half-life, 66 hours) compared to non-pregnant individuals (mean half-life, 45 hours following a single dose). Data on chronic dosing with nevirapine beginning at 38 weeks gestation is under study but not yet available; no data are available regarding the safety and pharmacokinetics of chronic dosing with nevirapine beginning earlier in pregnancy. The half-life of nevirapine was prolonged in neonates (median half-life, 36.8 hours) compared to what is observed in older children (mean half-life, 24.8 hours following a single dose). A single dose of nevirapine at 2–3 days of age in neonates whose mothers received nevirapine during labor maintained levels associated with antiviral activity for the first week of life. (Mirochnick 1997) Based on these data, a phase III perinatal transmission

prevention clinical trial sponsored by the PACTG will evaluate nevirapine administered as a 200 mg single dose to the woman during active labor and a single dose to the newborn at 2–3 days of age in combination with standard maternal antiretroviral therapy and ZDV chemoprophylaxis.

Delavirdine has not been studied in pregnant women. Delavirdine is positive on at least one *in vitro* screening test for carcinogenic potential. Long-term and transplacental animal carcinogenicity studies are not available for either of these drugs at the present time. Both drugs are associated with impaired fertility in rodents when administered at high doses, and delavirdine is teratogenic in rodents when very high doses are administered during pregnancy (ventricular septal defects were observed at doses associated with severe maternal toxicity). Both nevirapine and delavirdine are classified as FDA Pregnancy Category C.

Protease Inhibitors

Although phase I studies of several protease inhibitors (indinavir, ritonavir and nelfinavir in combination with ZDV and 3TC) in pregnant infected women and their infants will soon start in the U.S., there are currently no data available regarding drug dosage, safety and tolerance of any of the protease inhibitors in pregnancy or in neonates. In mice, indinavir and ritonavir both have significant placental passage; however, in rabbits, indinavir shows little placental passage. Rodent data are not available on placental passage for saquinavir and nelfinavir, and transplacental passage of any of the protease inhibitors in humans is unknown.

Administration of indinavir to pregnant rodents has revealed no evidence of teratogenicity. However, treatment-related increases in the incidence of supernumerary and cervical ribs were observed in offspring of pregnant rodents receiving indinavir at doses comparable to those administered to humans. In pregnant rats receiving high doses of ritonavir that were associated with maternal toxicity, some developmental toxicity was observed in the offspring, including decreased fetal weight, delayed skeletal ossification, wavy ribs, enlarged fontanelles and cryptorchidism; however, in rabbits, only decreased fetal weight and viability was observed at maternally toxic doses. Rodent studies have not demonstrated embryotoxicity or teratogenicity with saquinavir or nelfinavir.

Indinavir is associated with infrequent side effects in adults (hyperbilirubinemia and renal stones) that could be problematic for the newborn if transplacental passage occurs and the drug is administered near to delivery. Due to the immature hepatic metabolic enzymes in neonates, the drug would likely have a prolonged half-life and possibly exacerbate the physiologic hyperbilirubinemia observed in neonates. Additionally, due to immature neonatal renal function and the inability of the neonate to voluntarily ensure adequate hydration, high drug concentrations and/or delayed elimination in the neonate could result in a higher risk for drug crystallization and renal stone development than observed in adults. These concerns are theoretical and such effects have not been reported; because the half-life of indinavir in adults is short, these concerns may only be relevant if drug is administered near the time of delivery. Saquinavir, ritonavir and nelfinavir are classified as FDA Pregnancy Category B; indinavir is classified as Category C.

Update on PACTG 076 Results and Other Studies Relevant to ZDV Chemoprophylaxis of Perinatal HIV–1 Transmission

Final results were reported in 1996 for all 419 infants enrolled in PACTG 076. The results are the same as those initially reported in 1994; the Kaplan-Meier estimated transmission rate in infants who received placebo was 22.6% compared to 7.6% within those who received ZDV, a 66% reduction in transmission risk.(Sperling 1996)

The mechanism by which ZDV reduced transmission in PACTG 076 has not been fully defined. The effect of ZDV on maternal HIV–1 RNA did not fully account for the observed efficacy of ZDV in reducing transmission, raising the possibility that pre-exposure prophylaxis of the fetus/infant is an important component of protection. If so, transplacental passage of antiretroviral drugs would be important for prevention of transmission. Additionally, in placental perfusion studies, ZDV has been shown to be metabolized into the active tri-phosphate within the placenta (Sandberg 1995, Qian 1994), and this could have provided additional protection against *in utero* transmission. This phenomenon may be unique to ZDV, as metabolism to the active tri-phosphate form within the placenta has not been observed in the other nucleoside analogues that have been studied in this fashion (ddI and ddC).(Dancis 1993, Sandberg 1994) Development of ZDV-resistant virus was not necessarily associated with failure to prevent transmission. In a preliminary evaluation of genotypic resistance in women in PACTG 076, ZDV-resistant virus was present at delivery in only one of 7 transmitting women who had received ZDV and had evaluable samples; this woman had ZDV resistant virus at study entry despite no prior ZDV experience. (Eastman 1997) Additionally, the one woman in whom virus developed ZDV genotypic resistance between entry and delivery in this evaluation did not transmit HIV–1 to her infant.

No increase in congenital abnormalities compared to the general population was seen in PACTG 076 or observed in evaluation of data from the Antiretroviral Pregnancy Registry.(AntiReg 1997) Follow-up data on uninfected infants from PACTG 076 to a median age of 3.9 years has not shown any differences in growth, neurodevelopment or immunologic status between infants born to mothers who received ZDV compared to those born to mothers who received placebo.(Connor1995) No malignancies have been observed in short-term (up to 6 years of age) follow-up over 734 infants from PACTG 076 and natural history studies who had *in utero* ZDV exposure.(Hanson 1997) However, follow-up is too limited at this time to provide a definitive assessment of carcinogenic risk with human exposure. Long-term follow-up continues to be recommended for all infants with *in utero* ZDV exposure (or *in utero* exposure to any of the antiretroviral drugs).

The effect of temporary administration of ZDV during pregnancy to reduce perinatal transmission on the induction of viral resistance to ZDV and long-term maternal health requires further evaluation. Preliminary data from an interim analysis of PACTG protocol 288 (a study following women enrolled in PACTG 076 through 3 years postpartum) indicate no significant differences at 18 months postpartum in CD4 lymphocyte count or clinical status between those women who received ZDV compared to those who received placebo. (Bardeguez 1997) Limited data on the development of genotypic ZDV resistance mutations (codons 70 and/or 215) in PACTG 076 are available from a subset of women receiving ZDV, including the majority of those with infected infants. (Eastman 1997) Virus from one of 36 ZDV-receiving women (3%) with paired isolates from entry and delivery developed a ZDV genotypic resistance mutation. However, the population of women in PACTG 076 had very low HIV–1 RNA copy number, and while the

risk of inducing resistance with administration of ZDV chemoprophylaxis alone for several months during pregnancy was low in this substudy, it would likely be higher in a population of women with more advanced disease and higher levels of viral replication.

The efficacy of ZDV chemoprophylaxis for reducing transmission among populations of infected women with characteristics unlike those in PACTG 076 has been evaluated in another perinatal protocol (PACTG 185) as well as natural history studies. PACTG 185 evaluated the 3-part ZDV regimen combined with passive immunization with hyperimmune HIV–1 immunoglobulin (HIVIG), an immunoglobulin containing high levels of antibody to HIV–1, in infected pregnant women with advanced HIV–1 disease receiving antiretroviral therapy. Twenty-one percent of the women in this trial had CD4 count <200/mm^3 and 23% had received ZDV prior to the current pregnancy, many for prolonged periods of time. All women and infants in this study received the 3-part ZDV regimen, and were randomized to receive HIVIG vs standard intravenous immunoglobulin (IVIG). Because it was known that advanced disease and low CD4 count were associated with high risk for perinatal transmission, it was hypothesized that even with ZDV chemoprophylaxis, the perinatal transmission rate would be 11–15%. However, at the first interim analysis, the combined group transmission rate was only 4.8%, and did not significantly differ by duration of ZDV use or treatment arm (HIVIG vs IVIG).(ExecSum 1997) Enrollment was halted because the unexpectedly low transmission rate resulted in an inability to answer the primary protocol question in a timely fashion. However, the results of the trial confirm the efficacy of ZDV observed in PACTG 076, and extend this efficacy to women with advanced disease, low CD4 count and prior ZDV therapy.

These data are also consistent with epidemiologic data from several natural history studies. In a study in Connecticut, 39% of women with CD4 count <200/mm^3 who did not receive ZDV therapy during pregnancy had infected infants compared to 4% of women with similar CD4 counts who received ZDV. (Simpson 1997) In North Carolina, perinatal HIV–1 transmission has declined over time from 21% in 1993 to 6% in early 1996; only 3% of women who received all three components of the ZDV regimen had infected infants. (Fiscus 1997) In a large U.S. prospective multicenter natural history cohort of 556 mother-infant pairs, perinatal transmission declined from 19% in infants born before March 1994, before the results of PACTG 076 were available, to 8% in infants born after March 1994; decline in transmission was observed regardless of maternal CD4 lymphocyte count, duration of membrane rupture, mode of delivery, gestational age, and illicit drug use. (Cooper 1996) In another multicenter U.S. cohort, perinatal transmission declined from 20% among 1,160 children born before March 1994 to 12% among 373 born afterwards. (Simonds 1996)

At the present time, there are no clinical trials which demonstrate that antiretroviral drugs other than ZDV are effective in reducing perinatal transmission. Potent combination antiretroviral regimens have been shown to significantly suppress viral replication and improve clinical status in infected adults. However, the efficacy of ZDV exceeds the magnitude of reduction in plasma HIV–1 RNA copy number observed in PACTG 076. If pre-exposure prophylaxis of the infant is an important mechanism of prevention, it is possible that any antiretroviral drug with significant placental passage may be equally effective, although if antiretroviral activity within the placenta is important for protection, ZDV may be unique among the available nucleoside analogue drugs. While there are advantages of combination therapy for the woman's own health, further research is needed before it can be determined if there is an additional advantage to combination antiretroviral therapy for reducing perinatal transmission.

Perinatal HIV–1 Transmission and Maternal HIV–1 RNA Copy Number

The clear correlation of HIV–1 RNA levels with disease progression risk in non-pregnant infected adults suggests that HIV–1 RNA should be monitored during pregnancy at least as often as recommended for non-pregnant individuals (e.g., every 3 to 4 months or approximately once each trimester). Whether increased frequency of testing is needed during pregnancy is unclear and requires further study. Although there is no convincing data that pregnancy accelerates HIV–1 disease progression, longitudinal measurements of HIV–1 RNA levels during and after pregnancy have been evaluated in only one prospective cohort to date. In this cohort of 198 HIV–1-infected women, plasma HIV–1 RNA levels were higher at 6 months post partum than ante partum in many women; this increase was observed in women who had received and not received ZDV during pregnancy, as well as in women who continued therapy post partum. (Cao 1997)

Data on the correlation of viral load with risk of perinatal transmission have been conflicting, with some small studies suggesting an absolute correlation between HIV–1 RNA copy number and transmission risk. (Dickover 1996) However, in several larger studies while higher HIV–1 RNA levels were observed in transmitting women, there was large overlap in HIV–1 RNA copy number between transmitting and non-transmitting women, transmission was observed across the entire range of HIV–1 RNA levels (including in women with undetectable HIV–1 RNA), and the positive predictive value of RNA copy number for transmission was relatively low. (Mayaux 1997, Burchett 1996, Cao 1997, Thea 1997) In PACTG 076, there was a relationship between HIV–1 RNA copy number and transmission in women receiving placebo, but in ZDV-receiving women the relationship was markedly attenuated and no longer statistically significant. (Sperling 1996) No HIV–1 RNA threshold below which there was no risk of transmission was identified, and ZDV was effective in reducing transmission regardless of maternal HIV–1 RNA copy number.

While a general correlation between plasma and genital viral load has been described, women with undetectable plasma HIV–1 RNA levels in whom virus was detectable in the genital tract have been reported. (Rasheed 1996) If exposure to virus in the maternal genital tract during delivery is an important risk factor for perinatal transmission, then plasma HIV–1 RNA levels may not be a fully accurate indicator of risk.

Whether lowering maternal HIV–1 RNA copy number during pregnancy would reduce perinatal transmission risk requires more study. In a virologic study in 44 infected pregnant women, ZDV was effective in reducing transmission despite minimal effect on HIV–1 RNA levels, similar to what was observed in PACTG 076. (Melvin 1997) However, it is not known if a more potent antiretroviral regimen that more significantly suppresses viral replication would be associated with enhanced efficacy in reducing transmission risk over and above that observed with ZDV alone. At the present time, determination of HIV–1 copy number is important for decisions related to treatment. However, because ZDV benefit is observed regardless of maternal HIV–1 RNA level and because transmission may occur when HIV–1 RNA is not detectable, HIV–1 RNA

should not be the determining factor in decisions regarding use of ZDV chemoprophylaxis against perinatal transmission.

General Principles Regarding Use of Antiretrovirals in Pregnancy

Care of the HIV–1-infected pregnant woman should involve a collaboration between the HIV-specialist caring for the woman when she is not pregnant, her obstetrician, and the woman herself. Decisions regarding use of antiretroviral drugs during pregnancy should be made by the woman following discussion with her health care provider of the known and unknown benefits and risks of therapy. Initial evaluation of an infected pregnant woman should include an assessment of HIV–1 disease status and recommendations regarding antiretroviral treatment or alteration of her current antiretroviral regimen. This assessment should include evaluation of the degree of existing immunodeficiency determined by CD4 count; risk of disease progression determined by the level of plasma RNA; history of prior or current antiretroviral therapy; and gestational age. For those women not currently receiving antiretroviral therapy, decision-making regarding initiation of therapy should be the same as for non-pregnant individuals, with the additional consideration of the potential impact of such therapy on the fetus and infant. (PanelRec 1997) Similarly, for women currently receiving antiretrovirals, decisions regarding alterations in therapy should use the same parameters as for non-pregnant individuals. Additionally, use of the 3-part ZDV chemoprophylaxis regimen, alone or in combination with other antiretrovirals, should be discussed with and offered to all infected pregnant women for the purpose of reducing perinatal transmission risk.

Decisions regarding the use and choice of antiretroviral drugs during pregnancy are complex and must balance a number of competing factors influencing risk and benefit. Discussion regarding use of antiretroviral drugs during pregnancy should include what is known and not known about the effects of such drugs on the fetus and newborn, including lack of long-term outcome data on use of any of the available antiretroviral drugs in pregnancy; what would be recommended in terms of treatment for her own health; and the efficacy of ZDV for reduction of perinatal transmission. These discussions should include what is known from preclinical and animal studies and available clinical information about use of the various antiretroviral agents during pregnancy. It is important to place the hypothetical risks of these drugs during pregnancy in perspective to the proven benefit of antiretroviral therapy for her own health and ZDV chemoprophylaxis for reducing the risk of HIV–1 transmission to her infant.

Discussion of treatment options should be noncoercive, and the final decision regarding the use of antiretroviral drugs is the responsibility of the woman. Decisions regarding use and choice of antiretroviral drugs in non-pregnant individuals are becoming increasingly complicated, as the standard of care moves toward simultaneous use of multiple antiretroviral drugs to suppress viral replication below detectable limits. These decisions are further complicated in pregnancy, as the long-term consequences of *in utero* exposure to antiretroviral drugs, alone or in combination, for the infant are unknown. A decision to not accept treatment with ZDV or other drugs should not result in punitive action or denial of care, nor should use of ZDV be denied to a woman who wishes to minimize exposure of the fetus to other antiretroviral drugs and therefore chooses to receive only ZDV during pregnancy to reduce the risk of perinatal transmission after receiving appropriate counseling.

A long-term treatment plan should be developed with the patient and the importance of adherence to any prescribed antiretroviral regimen discussed with her. Depending on individual circumstances, provision of support services, drug treatment, and coordination of services between the criminal justice system, drug treatment programs and prenatal care providers may each play an important role in assisting women with adherence to antiretroviral regimens.

Public Health Service recommendations for infected women in the U.S. to refrain from breastfeeding to avoid postnatal transmission of HIV–1 to their infants through breast milk should not be altered for women receiving antiretroviral therapy. (CDC 1985, CDC 1995) Passage of antiretroviral drugs into breast milk has been evaluated for only a few antiretroviral drugs: ZDV, 3TC and nevirapine can be detected in the breast milk of women receiving the drugs, and ddI, d4T, and indinavir can be detected in the breast milk of lactating rats receiving therapy. The efficacy of antiretroviral therapy for prevention of postnatal transmission of HIV–1 through breast milk and the toxicity of chronic antiretroviral exposure of the infant via breast milk are unknown.

It is strongly recommended that health care providers who are treating HIV–1-infected pregnant women report cases of prenatal exposure to ZDV, ddI, ddC, d4T, 3TC, saquinavir or indinavir alone or in combination to the Antiretroviral Pregnancy Registry. The registry is an epidemiologic project to collect observational, non-experimental data on antiretroviral exposure during pregnancy for the purpose of assessing potential teratogenicity of these drugs in pregnancy. Registry data will be used to supplement animal toxicology studies and assist clinicians in weighing the potential risks and benefits of treatment for individual patients.

The registry is a collaborative project jointly managed by Glaxo Wellcome, Hoffmann-LaRoche Inc., Bristol-Myers Squibb Co., and Merck & Co. Inc., with an advisory committee of practitioners and CDC and NIH staff; it is anticipated that additional antiretroviral drugs will be added to the registry in the future. The registry does not use patient names, and birth outcome follow-up is obtained by registry staff from the reporting physician. Referrals should be directed to Antiretroviral Pregnancy Registry, Post Office Box 13398, Research Triangle Park, NC 27709–3398; telephone (919) 483–9437 or (800) 722–9292, ext. 39437; fax 919–315–8981.

Recommendations for Antiretroviral Chemoprophylaxis to Reduce Perinatal HIV Transmission

The following recommendations for use of antiretroviral chemoprophylaxis to reduce the risk of perinatal transmission are based upon various circumstances that may be commonly encountered in clinical practice (Table 3), with relevant considerations highlighted in the subsequent discussion section. These scenarios present only recommendations and flexibility should be exercised according to the circumstances of the individual patient. In the 1994 recommendations, 6 clinical scenarios were delineated based on maternal CD4 count, gestational age and prior antiretroviral use. Because current data indicate that the PACTG 076 ZDV regimen is also effective women with advanced disease, low CD4 count and prior ZDV therapy, clinical scenarios by CD4 count and prior ZDV use are not presented. Additionally, because current data indicate most transmission occurs near to or during delivery, it was felt that ZDV chemoprophylaxis should be recommended regardless of gestational age; thus, clinical scenarios by gestational age are also not presented.

Table 1 shows the ZDV dosage and regimen used in PACTG 076. The antenatal dosing regimen in PACTG 076 (100 mg orally five times daily) was selected based on standard ZDV dosage for adults at the time of the study. Recent reports from several laboratories have demonstrated that administration of ZDV three times a day will maintain intracellular ZDV tri-phosphate at levels comparable to that observed with more frequent dosing. (Rodman 1996; Barry 1996; Gambertoglio 1996) Additionally, comparable clinical response with twice daily dosing has been observed in some clinical trials. (Mulder 1994, Mannucci 1994, Cooper 1993) Thus, the current standard adult ZDV dosing regimen is 200 mg three times daily or 300 mg twice daily. Because the mechanism by which ZDV reduces perinatal transmission is not known, it cannot be known with certainty that these dosing regimens will have equivalent efficacy to that observed in PACTG 076. However, it would be anticipated that a two or three times daily regimen might be associated with enhanced maternal adherence over a five times daily regimen.

The recommended ZDV dosage for infants was derived from pharmacokinetic studies performed in term infants. (Boucher 1993) ZDV is primarily cleared through hepatic glucuronidation to an inactive metabolite. The glucuronidation metabolic enzyme system is immature in neonates, leading to prolonged ZDV half-life and clearance compared to older infants (ZDV half-life, 3.1 hours vs 1.9 hours, and clearance, 10.9 vs 19.0 mL per minute per kg body weight, respectively). Because premature infants have even greater immaturity in hepatic metabolic function than term infants, further prolongation in clearance may be expected. In a small pharmacokinetic study of 7 premature infants who were 28 to 33 weeks gestation and received a variety of ZDV dosing regimens, mean ZDV half-life was 6.3 hours and mean clearance was 2.8 mL per minute per kg body weight during the first 10 days of life. (Capparelli 1996) Appropriate ZDV dosing for premature infants has not been defined, but is being evaluated in a phase I clinical trial in premature infants less than 34 weeks gestation. The dosing regimen being studied is 1.5 mg per kg body weight orally or intravenously every 12 hours for the first 2 weeks of life; from 2 to 6 weeks of age, the dose is increased to 2 mg per kg body weight every 8 hours.

Because subtherapeutic dosing of antiretroviral drugs may be associated with enhancing the likelihood for the development of drug resistance, women who must temporarily discontinue therapy due to pregnancy-related hyperemesis should not reinstitute therapy until sufficient time has elapsed to assure that the drugs will be tolerated. In order to reduce the potential for emergence of resistance, if therapy requires temporary discontinuation for any reason during pregnancy, all drugs should be stopped and reintroduced simultaneously.

Clinical Scenarios

Scenario #1

HIV-Infected Pregnant Women Without Prior Antiretroviral Therapy

Recommendation: HIV–1 infected pregnant women must receive standard clinical, immunologic and virologic evaluation, and recommendations for initiation and choice of antiretroviral therapy should be based on the same parameters used in non-pregnant individuals, with consideration and discussion of the known and unknown risks and benefits of such therapy during pregnancy.

The 3-part ZDV chemoprophylaxis regimen should be recommended for all HIV-infected pregnant women to reduce the risk of perinatal transmission. If the woman's clinical, immunologic and virologic status indicates that more aggressive therapy is recommended to treat her infection (Panelrec, 1997), other antiretroviral drugs should be recommended in addition to ZDV. If the woman's status is such that therapy would be considered optional, the use of additional antiretrovirals may be offered, although whether this will provide additional benefit to the woman or her child is not known. Women who are in the first trimester of pregnancy may wish to consider delaying initiation of therapy at least until after 10 to 12 weeks gestation.

Discussion: The only drug that has been shown to reduce the risk of perinatal HIV–1 transmission is ZDV when administered in the 3-part PACTG 076 regimen; this regimen was shown to reduce transmission risk by approximately 70%. The mechanism by which ZDV reduced transmission is not known, and there are insufficient data available at present to justify the substitution of any antiretroviral drug other than ZDV for the purpose of reducing perinatal transmission. Therefore, if combination antiretroviral therapy is initiated during pregnancy, it is recommended that ZDV be included as a component of antenatal therapy and the intrapartum and newborn ZDV parts of the chemoprophylactic regimen should be recommended for the specific purpose of reducing perinatal transmission.

Women should be counseled that combination therapy may have significant benefit for their own health but is of unknown benefit to the fetus. Potent combination antiretroviral regimens may be shown in the future to provide enhanced protection against perinatal transmission, but this benefit is not yet proven. Decisions regarding the use and choice of an antiretroviral regimen will need to be individualized based on discussion with the woman about her risk for disease progression and the risks and benefits of delaying initiation of therapy; potential drug toxicities and interactions with other drugs; the need for adherence to the prescribed drug schedule; and preclinical, animal and clinical data relevant to use of the currently available antiretrovirals during pregnancy.

Because the period of organogenesis when the embryo is most susceptible to potential teratogenic effects of drugs is the first 10 weeks of gestation and the risks of antiretroviral therapy during that period are unknown, women who are in the first trimester of pregnancy may wish to consider delaying initiation of therapy until after 10 to 12 weeks gestation. This decision should be carefully considered and discussed between the health care provider and the patient, including an assessment of the woman's health status and the benefits and risks of delaying initiation of therapy for several weeks.

Women for whom initiation of antiretroviral therapy for the treatment of their HIV infection would be considered optional (eg. high CD4 count and low or undetectable RNA copy number) should have the potential benefits of standard combination therapy discussed with them and standard therapy, including the 3-part ZDV chemoprophylaxis regimen, offered to them. Some women may wish to restrict their exposure to antiretroviral drugs during pregnancy but still wish to reduce the risk of transmitting HIV–1 to their infant; the 3-part ZDV chemoprophylaxis regimen should be recommended in this situation. In these circumstances, the development of resistance should be minimized by the limited viral replication in the patient and the time-limited exposure to ZDV.

Because ZDV alone does not suppress HIV replication to undetectable levels, there are theoretical concerns that use of ZDV chemoprophylaxis alone might select for ZDV resistant viral variants which might limit future ability to favorable response to combination antiretroviral regimens that include

ZDV. There are currently insufficient data to determine if such use would have adverse consequences for the woman postpartum. In some adult combination antiretroviral clinical trials, patients with previous ZDV therapy experienced less benefit from combination therapy than those who were antiretroviral naive. (Delta 1996, Hammer 1996, Saravolatz 1996) However, the median duration of prior ZDV in these studies was 12 to 20 months and enrolled patients had more advanced disease and lower CD4 counts than the population of women enrolled in PACTG 076 or for whom initiation of therapy would be considered optional. In one study, patients with less than 12 months of ZDV responded as favorably to combination therapy as did those without prior ZDV therapy.(Saravolatz 1996) In PACTG 076, the median duration of ZDV therapy was 11 weeks, and the maximal duration of ZDV begun at 14 weeks gestation would be 6.5 months for a full-term pregnancy.

However, for women initiating therapy who have more advanced disease, concerns about development of resistance with use of ZDV alone as chemoprophylaxis during pregnancy would be greater. Factors that predict more rapid development of ZDV resistance include more advanced HIV–1 disease, low CD4 count, high HIV–1 RNA copy number, and possibly syncytium-inducing viral phenotype.(Kuritzkes 1996, Japour 1995) Therefore, women with advanced disease, low CD4 count or high RNA copy number should be counseled that therapy with a combination antiretroviral regimen that includes ZDV for reducing transmission risk would be more optimal for their own health than use of ZDV chemoprophylaxis alone.

Scenario #2

HIV-Infected Women Receiving Antiretroviral Therapy During the Current Pregnancy

Recommendation: HIV–1 infected women receiving antiretroviral therapy in whom pregnancy is identified after the first trimester should continue therapy. For women receiving antiretroviral therapy in whom pregnancy is recognized during the first trimester, the woman should be counseled regarding the benefits and potential risks of antiretroviral administration during this period, and continuation of therapy should be considered. If therapy is discontinued during the first trimester, all drugs should be stopped and reintroduced simultaneously to avoid the development of resistance. If the current therapeutic regimen does not contain ZDV, the addition of ZDV or substitution of ZDV for another nucleoside analogue antiretroviral is recommended after 14 weeks gestation. Intrapartum and newborn ZDV administration is recommended regardless of the antepartum antiretroviral regimen.

Discussion: Women who require antiretroviral treatment for their HIV infection should continue treatment during pregnancy. Discontinuation of therapy could lead to rebound in viral load, which theoretically could result in decline in immune status and/or disease progression, all of which might have adverse consequences for the fetus as well as the woman. Because the efficacy of non-ZDV containing antiretroviral regimens for reduction of perinatal transmission is unknown, it is recommended that ZDV be a component of the antenatal antiretroviral treatment regimen after 14 weeks gestation, and that intrapartum and newborn ZDV be administered. If a woman does not receive ZDV as a component of her antepartum antiretroviral regimen (eg. because of prior history of ZDV-related severe toxicity or personal choice), intrapartum and newborn ZDV should continue to be recommended.

Some women receiving antiretroviral therapy may recognize their pregnancy early in gestation, and concern for potential teratogenicity may lead some to consider temporarily stopping antiretroviral treatment until after the first trimester. There are insufficient data to support or refute the teratogenic risk of antiretroviral drugs when administered during the first 10 weeks of gestation. The decision to discontinue therapy during the first trimester should be carefully considered and discussed between the clinician and the woman. Considerations include gestational age of the pregnancy, the woman's clinical, immunologic and virologic status, and what is known and not known about the potential effects of the antiretroviral drugs on the fetus. If antiretroviral therapy is discontinued during the first trimester, all agents should be stopped and restarted in the second trimester simultaneously to avoid the development of resistance. There are currently no data to address whether transient discontinuation of therapy in this manner would be harmful for the woman and/or fetus.

The impact of prior antiretroviral exposure on the efficacy of ZDV chemoprophylaxis is unclear. Data from PACTG 185 indicate that duration of prior ZDV therapy in women with advanced HIV–1 disease, many of whom received prolonged ZDV prior to pregnancy, did not appear to be associated with diminished ZDV efficacy for reduction of transmission: perinatal transmission rates were similar among women who first initiated ZDV during pregnancy and women who had received ZDV prior to pregnancy. Thus at the present time, a history of ZDV therapy prior to the current pregnancy should not limit recommendations for administration of ZDV chemoprophylaxis to reduce perinatal transmission.

Some experts might consider administration of ZDV in combination with other antiretroviral drugs to newborns of women with a history of prior antiretroviral therapy, particularly in situations where the woman is infected with HIV–1 with documented high-level ZDV resistance, had disease progression while receiving ZDV, or had extensive prior ZDV monotherapy. However, the efficacy of this approach is not known. The appropriate dose and short and long-term safety for most antiretroviral agents other than ZDV are not defined for neonates. Because of immature liver metabolism and renal function, the half-life of many drugs (including ZDV, 3TC and nevirapine) is prolonged during the neonatal period, requiring specific dosing adjustments. Phase I studies of a number of other antiretroviral drugs in neonates are ongoing, but data are not yet available. The infected woman should be counseled regarding the postulated benefit of combination antiretroviral drugs in the neonate and the potential risks, what is known about appropriate dosing of the drugs in newborn infants, and that use of additional antiretroviral drugs for newborn prophylaxis is of unknown efficacy for reducing perinatal transmission risk.

Scenario #3

HIV-Infected Women in Labor Who Have Had no Prior Therapy

Recommendation: Administration of intrapartum intravenous ZDV should be recommended along with the 6 week newborn ZDV regimen. In the immediate postpartum period, the woman should have appropriate assessments (eg., CD4 count, HIV–1 RNA copy number) to determine if antiretroviral therapy is recommended for her own health.

Discussion: Intrapartum ZDV will not prevent the portion of perinatal transmission that occurs prior to labor. Therefore, the efficacy of an intrapartum/newborn antiretroviral regimen in reducing perinatal transmission is likely to be less than the

efficacy observed in PACTG 076. However, increasing data indicate that a majority of perinatal transmission occurs near to or during birth. Additionally, the efficacy of ZDV in reducing perinatal transmission is not primarily related to treatment-induced reduction in maternal HIV–1 RNA copy number. This implies that the presence of systemic antiretroviral drug levels in the neonate just prior to, during and for a period following birth may be a critical component for reducing transmission.

There are minimal data to address the efficacy of a regimen that lacks the antenatal ZDV component. An epidemiologic study from North Carolina compared perinatal transmission rates from mother-infant pairs who received different parts of the ZDV chemoprophylactic regimen. (Fiscus 1997) Among those who received all 3 components, 6 of 188 infants were infected (3%). While the numbers were small, only one of 16 infants (6%) were infected among those who received intrapartum and newborn ZDV.

ZDV readily crosses the placenta. Administration of the intravenous ZDV loading dose followed by continuous ZDV infusion during labor to the woman will provide ZDV levels in the newborn during passage through the birth canal that are nearly equivalent to maternal ZDV levels. The initial intravenous ZDV loading dose assures rapid attainment of virucidal ZDV levels in the woman and her infant, and the continuous ZDV infusion assures stable drug levels in the infant during the birth process regardless of the duration of labor. A study is currently ongoing in the U.S. to evaluate if oral dosing of ZDV during labor in a regimen of 300 mg orally every 3 hours would provide equivalent infant drug exposure to intravenous ZDV administration. Until this data is available, oral intrapartum administration of ZDV cannot be assumed to be equivalent to the intravenous intrapartum ZDV.

ZDV administered both during the intrapartum period and to the newborn provides both pre-and post-exposure prophylaxis to the infant. Some clinicians might consider administration of ZDV in combination with other antiretroviral drugs to the newborn, analogous to recommendations for post-exposure prophylaxis of nosocomial HIV–1 exposure. (CDC 1996) Any decision to use combination antiretroviral prophylaxis in the newborn must be accompanied by a discussion with the woman of potential benefits and risks and that there currently are no data to address the efficacy and safety of this approach.

Scenario #4

Infants Born to Mothers Who Have Received No Antiretroviral Therapy During Pregnancy or Intrapartum

Recommendation: The 6 week neonatal ZDV component of the ZDV chemoprophylactic regimen should be discussed with the mother and offered for the newborn; ZDV should be initiated as soon as possible after birth, preferably within 12–24 hours after birth. Some clinicians may choose to use ZDV in combination with other antiretroviral drugs, particularly if the mother has known or suspected ZDV-resistant virus. However, the efficacy of this approach is unknown and appropriate dosing regimens for neonates are incompletely defined. In the immediate postpartum period, the woman should undergo appropriate assessments (e.g., CD4 count, HIV–1 RNA copy number) to determine if antiretroviral therapy is required for her own health.

Discussion: Definitive data are not available to address whether ZDV administered solely during the neonatal period would reduce the risk of perinatal transmission. However, data from a case-control study of post-exposure prophylaxis of health care workers who had nosocomial percutaneous exposure to blood from HIV–1-infected individuals indicate that ZDV administration was associated with a 79% reduction in the risk for HIV–1 seroconversion following exposure. (CDC 1995) Post-exposure prophylaxis has also been shown to prevent retroviral infection in some animal studies. (Van Rompay 1995, Tsai 1995, Bottiger 1997)

The interval for which benefit may be gained from post-exposure prophylaxis is undefined, but data from animal studies indicate that the longer the delay in institution of prophylaxis, the less likely prevention will be observed. In most animal studies, antiretroviral prophylaxis initiated after 24–36 hours is usually not effective for preventing infection, although later administration has been associated with decreased viremia in ultimately infected animals in some cases. (VanRompay 1995, Bottiger 1997, Tsai 1995) In the feline leukemia virus cat model, ZDV treatment initiated within the first 4 days after viral challenge afforded protection, while treatment initiated one week postexposure did not prevent infection. (Mathes 1992) The relevance of the animal studies to prevention of perinatal transmission in humans is unknown. HIV–1 infection is established in the majority of infected infants by 1 to 2 weeks of age. In a study of 271 infected infants, HIV–1 DNA polymerase chain reaction (PCR) was positive in 38% of infected infants tested within 48 hours of birth. No major change in diagnostic sensitivity was observed over the first week of life, but detection rose rapidly during the second week of life, reaching 93% by 14 days of age. (Dunn 1995) Therefore, it would be unlikely that initiation of post-exposure prophylaxis after 14 days of age would have efficacy in preventing transmission, as infection would already be established in most children.

Recommendations have been made for antiretroviral post-exposure prophylaxis of nosocomial HIV–1 exposure. It was recommended that ZDV be administered as soon after exposure as possible, and the addition of 3TC was recommended in most cases to provide increased antiretroviral activity and presumed activity against ZDV-resistant HIV–1 strains. (CDC 1996) The addition of a protease inhibitor was recommended for particularly high-risk exposures. There are no data to address whether the addition of other antiretroviral drugs to ZDV increase the effectiveness of post-exposure prophylaxis. However, some clinicians may wish to provide ZDV in combination with one or more other antiretroviral agents in situations in which only post-exposure newborn prophylaxis is administered. Such a decision must be accompanied by a discussion with the woman of potential benefits and risks of this approach.

Recommendations for Monitoring of Women and Their Infants

Pregnant Woman and Fetus

HIV–1-infected pregnant women should be monitored in the same fashion that nonpregnant individuals are monitored. This should include measurement of CD4 lymphocyte count and HIV–1 RNA levels approximately every trimester (every 3 to 4 months) to determine need for antiretroviral therapy of maternal HIV–1 disease or alterations in such therapy, and/or initiation of prophylaxis against *Pneumocystis carinii* pneumonia. Some studies have found that changes in absolute CD4 count during pregnancy may reflect the physiologic changes of pregnancy on hemodynamic parameters and blood volume as opposed to a longterm influence of pregnancy upon CD4 count; CD4 percent appears to be more stable and may be a more accurate reflection of immune status during pregnancy. (Miotti 1992, Tuomala 1997)

Long-range plans should be developed with the woman regarding continuity of medical care and antiretroviral therapy for her own health after she delivers her infant.

Monitoring for potential complications of antiretroviral administration during pregnancy should take into account what is known about the side effects of the drugs the woman is receiving. For example, routine hematologic and liver chemistry monitoring is recommended for women receiving ZDV. Because there is less experience with use of combination antiretroviral regimens during pregnancy, more intensive monitoring may be warranted for women receiving drugs other than or in addition to ZDV.

Antepartum fetal monitoring for women who receive only ZDV chemoprophylaxis should be performed as clinically indicated, as the available data do not indicate that ZDV use in pregnancy is associated with increased risk for fetal complications. However, much less is known about the effect of combination antiretroviral therapy during pregnancy on the fetus. More intensive monitoring should be considered, including assessment of fetal anatomy with a level II ultrasound and continued assessment of fetal growth and well-being during the third trimester.

Neonate

A complete blood count and differential should be performed as a baseline evaluation prior to administration of ZDV. Anemia has been the primary complication of the 6 week ZDV regimen in the neonate, thus at a minimum, repeat measurement of hemoglobin is required at the completion of the 6 week ZDV regimen; repeat measurement may be performed at 12 weeks of age, by which any ZDV-related hematologic toxicity should be resolved. Infants who have anemia at birth or who are premature warrant more intensive monitoring.

There is little experience with potential toxicities in infants whose mothers have received combination antiretroviral therapy. More intensive monitoring of hematologic and chemistry measurements during the first few weeks of life would be advised in these infants.

All infants born to HIV–1-infected women should be placed on prophylaxis to prevent *Pneumocystis carinii* pneumonia at 6 weeks of age, following completion of the ZDV prophylaxis regimen. (CDC 1995) Monitoring and diagnostic evaluation of HIV–1-exposed infants should follow current standards of care. The available data do not indicate any delay in HIV–1 diagnosis in infants who have received the ZDV regimen. (Connor 1994, Kovacs 1995) However, the effect of combination antiretroviral therapy in the mother and/or newborn on the sensitivity of infant virologic diagnostic testing is unknown. Infants with negative virologic tests during the first 6 weeks of life should have diagnostic evaluation repeated after completion of the neonatal antiretroviral prophylaxis regimen.

Postpartum Follow-Up of Women

Comprehensive care and support services are required for women infected with HIV–1 and their families. Components of comprehensive care include the full range of medical care services including family planning and drug treatment; coordination of care for the woman, her children and other family members; support services such as case management and childcare; assistance with basic life needs such as housing, food, and transportation; and legal and advocacy services. This care should begin prior to pregnancy, with continuity of care ensured throughout pregnancy and postpartum.

Maternal medical services during the postpartum period must be coordinated between obstetric and HIV-specialist health care providers. Continuity of antiretroviral treatment when therapy is required for treatment of the woman's HIV infection is especially critical and must be assured. All women should have linkage with comprehensive health care services for her own medical care and for assistance with family planning and contraception.

Data from PACTG Protocols 076 and 288 do not indicate adverse effects through 18 months postpartum among women who received ZDV during pregnancy; however, continued clinical, immunologic and virologic follow-up of these women is ongoing. Women who have received only ZDV chemoprophylaxis during pregnancy should receive appropriate evaluation to determine the need for antiretroviral therapy in the postpartum period.

Long-Term Follow-Up of Infants

Data remain insufficient to address the effect that exposure to ZDV or other antiretroviral agents *in utero* might have on long-term risk for neoplasia or organ system toxicities in children. Data from follow-up of PACTG 076 infants through 18 to 36 months of age do not indicate any differences in immunologic, neurologic and growth parameters between infants who were exposed to the ZDV regimen compared to placebo; continued intensive follow-up through PACTG 219 is ongoing. PACTG 219 will also provide intensive follow-up for infants born to women who receive other antiretroviral drugs as part of PACTG perinatal protocols, so some data regarding follow-up of exposure to other antiretroviral agents alone or in combination will be available in the future.

Innovative methods are needed to provide follow-up to infants with *in utero* exposure to ZDV or any other antiretrovirals outside of PACTG protocols. Information regarding such exposure should be part of the ongoing medical record of the child, particularly for uninfected children. Follow-up of children with antiretroviral exposure should continue into adulthood because of the theoretical concerns regarding potential for carcinogenicity of the nucleoside analogue antiretroviral drugs. Long-term follow-up should include at least yearly physical examination of all antiretroviral-exposed children, and for older adolescent females, gynecologic evaluation with pap smears.

On a population basis, HIV–1 surveillance databases from states that require HIV–1 reporting provide an opportunity to collect information on *in utero* antiretroviral exposure. To the extent permitted by federal law and regulations, these confidential registries can be used to compare to birth defect and cancer registries to look for potential adverse outcomes.

Future Research Needs

An increasing number of HIV–1-infected women will be receiving antiretroviral therapy for their own health during pregnancy. Preclinical evaluations of antiretroviral drugs for potential pregnancy- and fetal-related toxicities should be completed for all current and new antiretroviral drugs. More data are needed regarding the safety and pharmacokinetics of antiretroviral drugs during pregnancy and in the neonate, particularly when used in combination regimens. Results from a number of phase I studies will be available in the next year which will assist in delineating appropriate dosing and provide data on short-term safety of these drugs in pregnant women and infants. However, the long-term consequences of *in utero* antiretroviral exposure for the infant is unknown, and mechanisms must be developed to gather information about the long-term outcome for exposed infants. Innovative methods are needed to enable identification and follow-up of populations of children with *in utero* antiretroviral exposure.

Additional studies are needed to determine the long-term consequences of transient use of ZDV chemoprophylaxis during pregnancy for women who do not desire to receive combination therapy antenatally, including the risk for development of ZDV-resistance.

While there are theoretical reasons to believe that more potent antiretroviral combination regimens that dramatically diminish viral load may also prevent perinatal transmission, there are currently no data to address this hypothesis. The efficacy of combination antiretroviral therapy specifically to decrease the risk of perinatal HIV–1 transmission needs to be evaluated in ongoing and future perinatal clinical trials. Additionally, epidemiologic studies and clinical trials are needed to delineate the relative efficacy of the various components of the 3-part ZDV chemoprophylactic regimen. Improved understanding of the factors associated with perinatal transmission despite ZDV chemoprophylaxis is needed in order to develop alternative effective regimens. Because of the dramatic decline in perinatal HIV–1 transmission with widespread implementation of ZDV chemoprophylaxis, the conduct of such epidemiologic studies and clinical trials requires an international collaborative effort.

Additionally, regimens that are more feasible for implementation in the developing world are urgently needed. The 3-part ZDV chemoprophylactic regimen is complex and may not be a feasible option for many developing countries: most pregnant women show up in health care systems only around the time of delivery; widespread safe administration of intravenous ZDV infusions during labor may not be possible; and the cost of the regimen may be prohibitive and many times greater than the per capita health expenditures for the country. There are several ongoing studies in developing countries that are evaluating the efficacy of more practical, abbreviated modifications of the ZDV regimen. Additionally, a number of non-antiretroviral interventions are also under study. Results of these studies will be available in the next few years.

References

Centers for Disease Control. Public Health Service Task Force on Use of Zidovudine to Reduce Perinatal Transmission of Human Immunodeficiency Virus. MMWR; 1994;43 (RR–11):1–21.

Connor EM, Sperling RS, Gelber R, *et al.* Reduction of maternal-infant transmission of human immunodeficiency virus type 1 with zidovudine treatment. N Engl J Med 1994; 331:1173–80.

Centers for Disease Control. U.S. Public Health Service recommendations for human immunodeficiency virus counseling and voluntary testing for pregnant women. MMWR 1995; 44 (RR–7):1–14.

Cooper ER, Nugent RP, Diaz C, *et al.* After AIDS Clinical Trial 076: the changing pattern of zidovudine use during pregnancy, and the subsequent reduction in vertical transmission of human immunodeficiency virus in a cohort of infected women and their infants. J Infect Dis 1996; 174:1207–11.

Fiscus SA, Adimora AA, Schoenbach VJ, *et al.* Perinatal HIV infection and the effect of zidovudine therapy on transmission in rural and urban counties. JAMA 1996; 275:1483–8.

Fiscus SA, Adimora AA, Schoenbach VJ, *et al.* Importance of maternal ZDV therapy in the reduction of perinatal transmission of HIV. Proceedings from the Fourth Conference on Retroviruses and Opportunistic Infections, Washington. D.C.; January 22–26, 1997: 176 (Abstract 379).

Thomas P, Singh T, Bornschlegel K, *et al.* Use of ZDV to prevent perinatal HIV in New York City (NYC). Proceedings from the Fourth Conference on Retroviruses and Opportunistic Infections, Washington. D.C.; January 22–26, 1997: 176 (Abstract 381).

Blanche S, Mayaux MJ, Mandelbrot L, *et al.* Acceptability and impact of zidovudine prevention on mother-to-child transmission in France. Proceedings from the Fourth Conference on Retroviruses and Opportunistic Infections, Washington. D.C.; January 22–26, 1997:176 (Abstract 380).

Simonds RJ, Nesheim S, Matheson P, *et al.* Declining mother-to-child HIV transmission following perinatal zidovudine recommendations, United States. Proceedings from the XI International Conference on AIDS, Vancouver, Canada; July 7–12, 1996; Volume I: 248 (Abstract Tu.C.440).

Perelson AS, Neumann AU, Markowitz M, *et al.* HIV–1 dynamics in vivo: virion clearance rate, infected cell life-span, and viral generation time. Science 1996; 271:1582–6.

Havlir DV, Richman DD. Viral dynamics of HIV: implications for drug development and therapeutic strategies. Ann Intern Med 1996; 124:984–94.

Mofenson LM. Mother-child HIV–1 transmission: timing and determinants. Obstet Gynecol Clinics NA 1997: in press.

Panel on Clinical Practices for Treatment of HIV Infection. Guidelines for the use of antiretroviral agents in HIV-infected adults and adolescents. U.S. Public Health Service, Washington, D.C. 1997, in press.

Minkoff H, Augenbraun M. Antiretroviral therapy for pregnant women. Am J Obstet Gynecol 1997; 176:478–89.

Mills JL. Protecting the embryo from X-rated drugs. N Engl J Med 1995; 333:124–5.

Centers for Disease Control. Pregnancy outcomes following systemic prenatal acyclovir exposure—June 1, 1984–June 30, 1993. MMWR 1993; 42:806–9.

Johnson MA, Goodwin C, Yuen GJ, *et al.* The pharmacokinetics of 3TC administered to HIV–1 infected women (pre-partum, during labour and post-partum) and their offspring. Proceedings from the XI International Conference on AIDS, Vancouver, Canada; July 7–12, 1996; Volume I: 249–50 (Abstract Tu.C.445).

Moodley J, Moodley D, Pillay K, *et al.* Antiviral effect of lamivudine alone and in combination with zidovudine in HIV-infected pregnant women. Proceedings from the Fourth Conference on Retroviruses and Opportunistic Infections, Washington. D.C.; January 22–26, 1997: 176 (Abstract 607).

Ayers KM, Clive D, Tucker WE Jr, Hajian G, de Miranda P. Nonclinical toxicology studies with zidovudine: genetic toxicity tests and carcinogenicity bioassays in mice and rats. Fundam Appl Toxicol 1996; 32:148–58.

Olivero OA, Anderson LM, Diwan BA, *et al.* AZT is a genotoxic transplacental carcinogen in animal models. JAIDS 1997:14:A29 (Abstract 52).

Mirochnick M, Sullivan J, Gagnier P, *et al.* Safety and pharmacokinetics of nevirapine in neonates born to HIV–1 infected women. Proceedings from the Fourth Conference on Retroviruses and Opportunistic Infections, Washington. D.C.; January 22–26, 1997: 176 (Abstract 723).

Sperling RS, Shapiro DE, Coombs RW, *et al.* Maternal viral load, zidovudine treatment, and the risk of transmission of human immunodeficiency virus from mother to infant. N Engl J Med 1996; 335:1621–9.

Sandberg JA, Slikker W Jr. Developmental pharmacology and toxicology of anti-HIV therapeutic agents: dideoxynucleosides. FASEB J 1995;9:1157–63.

Qian M, Bui T, Ho RJY, Unadkat JD. Metabolism of 3′ -azido-3′ deoxythymidine (AZT) in human placental trophoblasts and hofbauer cells. Biochem Pharmacol 1994; 48:383–9.

Dancis J, Lee JD, Mendoza S, Liebes L. Transfer and metabolism of dideoxyinosine by the perfused human placenta. JAIDS 1993; 6:2–6.

Sandberg JA, Binienda Z, Lipe G, Slikker Jr W. Placental transfer and fetal disposition of dideoxycytidine (ddC) and dideoxyinosine (ddI). Toxicologist 1994; 14; 434 (abstract).

Antiretroviral Pregnancy Registry for didanosine, lamivudine, saquinavir, stavudine, zalcitabine, zidovudine. Interim Report, 1 January 1989 through 31 December 1996. A Collaborative Project Managed by Bristol Myers Squibb Co., Glaxo Wellcome, and Hoffman-La Roche, Inc. Research Triangle Park, NC 1997.

Connor E, Sperling R, Shapiro D, *et al.* Long term effect of zidovudine exposure among uninfected infants born to HIV-infected mothers in Pediatric AIDS Clinical Trials Group protocol 076. Proceedings of the 35th Interscience Conference on Antimicrobial Agents and Chemotherapy. San Francisco, CA, September 17–20 1995:205 (Abstract I1).

Eastman PS, Shapiro DE, Coombs RW, *et al.* Maternal genotypic ZDV resistance and failure of ZDV therapy to prevent mother-child HIV–1 transmission. Abstracts of the 4th Conference on Retroviruses and Opportunistic Infections. Washington, D.C., January 22–26, 1997; 160 (Abstract 516).

Hanson C, Cooper E, Antonelli T, *et al.* Lack of tumors in infants with perinatal HIV exposure and fetal/neonatal exposure to zidovudine. National Conference on Women and HIV. Pasadena CA, May 4–7, 1997.

Bardegeuz A, Spino C. Interim analysis PACTG 288. Presented at Workshop on Antiretroviral Therapy to Reduce the Risk of Perinatal Transmission. Herndon, Virginia; May 9, 1997.

Pediatric ACTG Protocol 185 Executive Summary. National Institute of Child Health & Human Development, National Institutes of Health. Bethesda, MD: March 25, 1997.

Simpson BJ, Shapiro ED, Andiman WA. Reduction in the risk of vertical transmission of HIV–1 associated with treatment of pregnant women with orally administered zidovudine alone. JAIDS 1997; 14:145–52.

Dickover RE, Garratty EM, Horman SA, *et al.* Identification of levels of maternal HIV–1 RNA associated with risk of perinatal transmission: effect of maternal zidovudine treatment on viral load. JAMA 1996; 275:599–605.

Mayaux M-J, Dussaix E, Isopet J, *et al.* Maternal virus load during pregnancy and the mother-to-child transmission of human immunodeficiency virus type 1: the French Perinatal Cohort Studies. J Infect Dis 1997; 175:172–5.

Cao Y, Krogstad P, Korber BT, *et al.* Maternal HIV–1 viral load and vertical transmission of infection: The Ariel Project for the prevention of HIV transmission from mother to infant. Nature Medicine 1997; 3:549–52.

Thea DM, Steketee RW, Bornshlegel K, *et al.* The effect of maternal viral load on the risk of perinatal transmission of HIV–1. J Infect Dis 1997; 175:707–11.

Burchett SK, Kornegay J, Pitt J, *et al.* Assessment of maternal plasma HIV viral load as a correlate of vertical transmission. Proceedings of the Third National Conference on Retroviruses and Opportunistic Infections. Washington, D.C., January 28–February 1, 1996:161 (Abstract LB3).

Rasheed S, Li Z, Xu D, Kovacs A. Presence of cell-free human immunodeficiency virus in cervicovaginal secretions is independent of viral load in the blood of human immunodeficiency virus-infected women. Am J Obstet Gynecol 1996; 175: 222–9.

Melvin AJ, Burchett SK, Watts DH, *et al.* Effect of pregnancy and zidovudine therapy on viral load in HIV–1-infected women. JAIDS 1997; 14:232–6.

Centers for Disease Control. Recommendations for assisting in the prevention of perinatal transmission of human T-lymphotropic virus type III/lymphadenopathy-associated virus and acquired immunodeficiency syndrome. MMWR 1985; 34:721–6.

Rodman JH, Ribbins BL, Flynn PM, *et al.* A systemic and cellular model for zidovudine plasma concentrations and intracellular phosphorylation in patients. J Infect Dis 1996; 174:490–99.

Barry MG, Khoo SH, Beal GJ, *et al.* The effect of zidovudine dose on the information of intracellular phosphorylated metabolites. AIDS 1996; 10:1361–7.

Gambertoglio JG, Peter K. Zidovudine phosphorylation after short term and long term therapy with zidovudine in patients infected with HIV. Clin Pharmacol Therapy 1996; 60:168–76.

Mulder JW, Cooper DA, Mathiesen L, *et al.* Zidovudine twice daily in asymptomatic subjects with HIV infection and a high risk of progression to AIDS: a randomized, double-blind placebo controlled study. AIDS 1994; 8:313–21.

Mannucci PM, Gringeri A, Savidge G, *et al.* Randomized, double-blind, placebo-controlled trial of twice-daily zidovudine in asymptomatic haemophiliacs infected with the human immunodeficiency virus type 1. Brit J Haematol 1994;86:174–9.

Cooper DA, Gatell JM, Kroon S, *et al.* Zidovudine in persons with asymptomatic HIV infection and CD4+ cell counts greater than 400 per cubic millimeter. N Engl J Med 1993;329:297–303.

Boucher FD, Modlin JF, Weller S, *et al.* Phase I evaluation of zidovudine administered to infants exposed at birth to the human immunodeficiency virus. J Pediatr 1993;122:1137–44.

Capparelli EV, Mirochnick MH, Dankner WM. Zidovudine pharmacokinetics in premature infants exposed to HIV. Pediatr Res 1996;39:169A.

Shafer RW, Iversen AKN, Winters MA, *et al.* Drug resistance and heterogeneous long-term virologic responses of human immunodeficiency virus type 1-infected subjects to zidovudine and didanosine combination therapy. J Infect Dis 1995;175:70–8.

The Delta Coordinating Committee. Delta: a randomized double-blind controlled trial comparing combinations of zidovudine plus didanosine or zalcitabine with zidovudine alone in HIV-infected individuals. Lancet 1996;348:283–91.

Hammer SM, Katzenstein DA, Hughes MD, *et al.* A trial comparing nucleoside monotherapy with combination therapy in HIV-infected adults with CD4 cell counts from 200 to 500 per cubic millimeter. N Engl J Med 1996;335:1081–90.

Saravolatz LD, Winslow DL, Collins G *et al.* Zidovudine alone or in combination with didanosine or zalcitabine in HIV-infected patients with acquired immunodeficiency syndrome or fewer than 200 CD4 cells per cubic millimeter. N Engl J Med 1996;335:1099–106.

Kuritzkes DR. Clinical significance of drug resistance in HIV–1 infection. AIDS 1996;10 (suppl5):S27–31.

Japour AJ, Welles S, D'Aquila RT, *et al.* Prevalence and clinical significance of zidovudine resistance mutations in human immunodeficiency virus isolated from patients after long-term zidovudine treatment. J Infect Dis 1995;171;1172–9.

Dunn DT, Brandt CD, Krivine A, *et al.* The sensitivity of HIV–1 DNA polymerase chain reaction in the neonatal period and the relative contributions of intra-uterine and intra-partum transmission. AIDS 1995;9:F7-F11.

Centers for Disease Control. Update: provisional public health service recommendations for chemoprophylaxis after occupational exposure to HIV. MMWR 1996;45:468–72.

Centers for Disease Control. Case-control study of HIV seroconversion in health-care workers after percutaneous exposure to HIV-infected blood—France, United Kingdom, and United States, January 1988-August 1994. MMWR 1995;44:929–33.

Van Rompay KKA, Otsyula MG, Marthas ML, *et al.* Immediate zidovudine treatment protects simian immunodeficiency virus-infected newborn macaques against rapid onset of AIDS. Antimicrob Ag Chemother 1995;39:125–31.

Bottiger D, Johansson N-G, Samuelsson B, *et al.* Prevention of simian immunodeficiency virus, SIVsm, or HIV–2 infection in cynomolgus monkeys by pre- and postexposure administration of BEA–005. AIDS 1997;11:157–62.

Tsai C-C, Follis KE, Sabo A, *et al.* Prevention of SIV infection in macaques by (R)-9-(2-phosphonylmethoxypropyl)adenine. Science 1995;270:1197–9.

Mathes LE, Polas PJ, Hayes KA, *et al.* Pre- and post-exposure chemoprophylaxis: evidence that 3'-azido-3'dideoxythymidine (AZT) inhibits feline leukemia virus diseases by a drug-induced vaccine effect. Antimicrob Ag Chemother 1992;36:2715–21.

Miotti PB, Liomba G, Dallabetta GA, *et al.* T-lymphocyte subsets during and after pregnancy: analysis in human immunodeficiency virus type 1-infected and uninfected Malawian mothers. J Infect Dis 1992;165:146–9.

Tuomala RE, Kalish LA, Zorilla C, *et al.* A longitudinal study of changes in total, CD4+ and CD8+ lymphocytes during pregnancy and one postpartum year in HIV-infected women. Obstet Gynecol 1997;in press.

Centers for Disease Control. 1995 revised guidelines for prophylaxis against *Pneumocystis carinii* pneumonia for children infected with or perinatally exposed to human immunodeficiency virus. MMWR 1995;44:1–11.

Kovacs A, Xu J, Rasheed S, *et al.* Comparison of a rapid nonisotopic polymerase chain reaction assay with four commonly used methods for the early diagnosis of human immunodeficiency virus type 1 infection in neonates and children. Pediatr Infect Dis J 1995;14:948–54.

Dated: June 26, 1997.

John M. Eisenberg,

Principal Deputy Assistant Secretary for Health, U.S. Department of Health and Human Services.

TABLE 1.—PACTG 076 ZDV REGIMEN

Antepartum	Oral administration of 100 mg ZDV five times daily, initiated at 14–34 weeks gestation and continued throughout the pregnancy.
Intrapartum	During labor, intravenous administration of ZDV in a 1-hour loading dose of 2 mg per kg of body weight, followed by a continuous infusion of 1 mg per kg of body weight per hour until delivery.
Postpartum	Oral administration of ZDV to the newborn (ZDV syrup at 2 mg per kg body weight per dose every 6 hours) for the first 6 weeks of life, beginning at 8–12 hours after birth (Note: intravenous dosage for infants who cannot tolerate oral intake is 1.5 mg per kg body weight intravenously every 6 hours).

TABLE 2.—PRECLINICAL AND CLINICAL DATA RELEVANT TO USE OF ANTIRETROVIRALS IN PREGNANCY

Antiretroviral drug	FDA pregnancy category*	Placental passage [newborn: maternal drug ratio]	Long-term animal carcinogenicity studies
Nucleoside Analogue Reverse Transcriptase Inhibitors:			
Zidovudine (ZDV)	C	Yes (human) [0.85]	Positive (rodent, noninvasive vaginal epithelial tumors).
Zalcitabine (ddC)	C	Yes (rhesus) [0.30–0.50]	Positive (rodent, thymic lymphomas).
Didanosine (ddI)	B	Yes (human) [0.5]	Negative (no tumors, lifetime rodent study).
Stavudine (d4T)	C	Yes (rhesus) [0.76]	Not completed.
Lamivudine (3TC)	C	Yes (human) [~1.0]	Negative (no tumors, lifetime rodent study).
Non-Nucleoside Reverse Transcriptase Inhibitors:			
Nevirapine	C	Yes (human) [~1.0]	Not completed.
Delavirdine	C	Unknown	Not completed.
Protease Inhibitors:			
Indinavir	C	Yes (rats) ''Significant'' in rats, but low in rabbits.	Not completed.
Ritonavir	B	Yes (rats) [mid-term fetus, 1.15; late-term fetus, 0.15–0.64].	Not completed.
Saquinavir	B	Unknown	Not completed.
Nelfinavir	B	Unknown	Not completed.

*FDA Pregnancy Categories are:

A—Adequate and well-controlled studies of pregnant women fail to demonstrate a risk to the fetus during the first trimester of pregnancy (and there is no evidence of risk during later trimesters);

B—Animal reproduction studies fail to demonstrate a risk to the fetus and adequate but well-controlled studies of pregnant women have not been conducted;

C—Safety in human pregnancy has not been determined, animal studies are either positive for fetal risk or have not been conducted, and the drug should not be used unless the potential benefit outweighs the potential risk to the fetus;

D—Positive evidence of human fetal risk based on adverse reaction data from investigational or marketing experiences, but the potential benefits from the use of the drug in pregnant women may be acceptable despite its potential risks;

X—Studies in animals or reports of adverse reactions have indicated that the risk associated with the use of the drug for pregnant women clearly outweighs any possible benefit.

TABLE 3.—SUMMARY: CLINICAL SITUATIONS AND RECOMMENDATIONS FOR USE OF ANTIRETROVIRAL DRUGS TO REDUCE PERINATAL HIV TRANSMISSION

Clinical scenario	Recommendation*
Scenario #1: HIV-infected pregnant women without prior antiretroviral therapy.	HIV–1 infected pregnant women must receive standard clinical, immunologic and virologic evaluation, and recommendations for initiation and choice of antiretroviral therapy should be based on the same parameters used in non-pregnant individuals, with consideration and discussion of the known and unknown risks and benefits of such therapy during pregnancy. The 3-part ZDV chemoprophylaxis regimen should be recommended for all HIV-infected pregnant women to reduce the risk of perinatal transmission. If the woman's clinical, immunologic and virologic status indicates that more aggressive therapy is recommended to treat her infection (Panelrec, 1997), other antiretroviral drugs should be recommended in addition to ZDV.

TABLE 3.—SUMMARY: CLINICAL SITUATIONS AND RECOMMENDATIONS FOR USE OF ANTIRETROVIRAL DRUGS TO REDUCE PERINATAL HIV TRANSMISSION—Continued

Clinical scenario	Recommendation*
	If the woman's status is such that therapy would be considered optional, the use of additional antiretrovirals may be offered, although whether this will provide additional benefit to the woman or her child is not known.
	Women who are in the first trimester of pregnancy may wish to consider delaying initiation of therapy at least until after 10 to 12 weeks gestation.
Scenario #2: HIV-infected women receiving antiretroviral therapy during the current pregnancy.	HIV–1 infected women receiving antiretroviral therapy in whom pregnancy is identified after the first trimester should continue therapy.
	For women receiving antiretroviral therapy in whom pregnancy is recognized during the first trimester, the woman should be counseled regarding the benefits and potential risks of antiretroviral administration during this period, and continuation of therapy should be considered.
	If therapy is discontinued during the first trimester, all drugs should be stopped and reintroduced simultaneously to avoid the development of resistance.
	If the current therapeutic regimen does not contain ZDV, the addition of ZDV or substitution of ZDV for another nucleoside analogue antiretroviral is recommended after 14 weeks gestation. Intrapartum and newborn ZDV administration is recommended regardless of the antepartum antiretroviral regimen.
Scenario #3: HIV-infected women in labor who have had no prior therapy.	Administration of intrapartum intravenous ZDV should be recommended along with the 6-week newborn ZDV regimen.
	In the immediate postpartum period, the woman should have appropriate assessments (e.g., CD4 count, HIV–1 RNA copy number) to determine if antiretroviral therapy is recommended for her own health.
Scenario #4: Infants born to mothers who have received no antiretroviral therapy during pregnancy or intrapartum.	The 6 week neonatal ZDV component of the ZDV chemoprophylactic regimen should be discussed with the mother and offered for the newborn.
	ZDV should be initiated as soon as possible after birth, preferably within 12–24 hours after birth.
	Some clinicians may choose to use ZDV in combination with other antiretroviral drugs, particularly if the mother has known or suspected ZDV-resistant virus. However, the efficacy of this approach is unknown and appropriate dosing regimen for neonates are incompletely defined.
	In the immediate postpartum period, the woman should undergo appropriate assessments (e.g., CD4 count, HIV–1 RNA copy number) to determine if antiretroviral therapy is required for her own health.

*General note: Discussion of treatment options and recommendations should be noncoercive, and the final decision regarding the use of antiretroviral drugs is the responsibility of the woman. A decision to not accept treatment with ZDV or other drugs should not result in punitive action or denial of care, nor should use of ZDV be denied to a woman who wishes to minimize exposure of the fetus to other antiretroviral drugs and therefore chooses to receive only ZDV during pregnancy to reduce the risk of perinatal transmission.

[FR Doc. 97–17854 Filed 7–8–97; 8:45 am]

BILLING CODE 4140–01–P

DEPARTMENT OF HEALTH AND HUMAN SERVICES

Advisory Commission on Consumer Protection and Quality in the Health Care Industry; Public Meeting

In accordance with Section 10(a)(2) of the Federal Advisory Committee Act, Pub. L. 92–463, notice is hereby given of the meeting of the Advisory Commission on Consumer Protection and Quality in the Health Care Industry. This two-day meeting will be open to the public, limited only by the space available.

Place of meeting: The Sheraton Burlington Hotel & Conference Center; 870 Williston Road; South Burlington, VT 05403. Exact locations of the sessions will be announced in the hotel lobby.

Times and Dates: The public meeting will span two days. On Monday, July 21, 1997, the subcommittee break-out sessions will take place from 8 a.m. until 12 p.m. In the afternoon, the full Commission will convene at 12:45 p.m. and the meeting will continue until 5 p.m. On Tuesday, July 22, the Commission will reconvene at 8:30 a.m. with adjournment at 1 p.m.

Purpose/Agenda: To hear testimony and continue formal proceedings of the Commission's four (4) subcommittees. Agenda items are subject to change as priorities dictate.

Contact Person: For more information, including substantive program information and summaries of the meeting, please contact: Edward (Chip) Malin, Hubert Humphrey Building, Room 118F, 200 Independence Avenue, SW., Washington, DC 20201; (202/205–3333)

Dated: July 1, 1997.

Janet Corrigan,

Executive Director, Advisory Commission on Consumer Protection & Quality in the Health Care Industry.

[FR Doc. 97–17814 Filed 7–8–97; 8:45 am]

BILLING CODE 4110–60–M

DEPARTMENT OF HEALTH AND HUMAN SERVICES

Statement of Organization, Functions, and Delegations of Authority; Program Support Center

Part P (Program Support Center) of the Statement of Organization, Functions, and Delegations of Authority for the Department of Health and Human Services (60 FR 51480, October 2, 1995 as amended most recently at 62 FR 25955, May 12, 1997) is amended to reflect changes in Chapters PB and PF within Part P, Program Support Center, Department of Health and Human Services (HHS). The Systems Networking Division is being transferred from the Information Technology Service to the Human Resources Service because the nature of the Division's work will continue to be closely tied to the personnel systems of the Human Resources Service.

Program Support Center

Under *Part P, Section P–20, Functions,* change the following:

Under *Chapter PF, Information Technology Service (PF),* delete the title and functional statement for the *Systems Networking Division (PFF)* in its entirety.

Under *Chapter PB, Human Resources Service (PB),* after the statement for the *Personnel and Pay Systems Division (PBG),* add the following title and functional statement:

Systems Networking Division (PBH)

(1) Designs, obtains, installs, and maintains automatic data processing systems, including hardware, software, and data communications required to support the IMPACT system and the office automation activities of the HRS; (2) provides automated data processing and distributed configuration management services for human resource computer systems located in the regional offices and the OPDIV personnel offices; (3) provides the personnel offices with technical expertise in such areas as data communications, data center hardware and related equipment, data center operating systems, general purpose software, and data center management; (4) schedules, operates and maintains the production processes in the departmental personnel/payroll systems; and (5) produces and distributes output products including computer files, printed reports and electronic transmissions for both internal, departmental and external customer use.

Dated: June 30, 1997.

Lynnda M. Regan,

Director, Program Support Center.

[FR Doc. 97–17894 Filed 7–8–97; 8:45 am]

BILLING CODE 4160–17–M

DEPARTMENT OF HEALTH AND HUMAN SERVICES

Centers for Disease Control and Prevention

[Program Announcement Number 793]

Cooperative Agreement for the Development of New Diagnostic Methods and a Research Program To Determine the Incidence of Emerging Human Spongiform Encephalopathies

Introduction

The Centers for Disease Control and Prevention (CDC) announces the availability of fiscal year (FY) 1997 funds to provide assistance through a cooperative agreement for developing new diagnostic methods and a research program to determine the incidence of emerging human spongiform encephalopathies.

CDC is committed to achieving the health promotion and disease prevention objectives of Healthy People 2000, a national activity to reduce morbidity and mortality and improve the quality of life. This announcement is related to the priority area of Immunization and Infectious Diseases. (For ordering a copy of Healthy People 2000, see the section Where to Obtain Additional Information.)

Authority

This program is authorized under sections 301 and 317 (42 U.S.C. 241 and 247b), of the Public Health Service Act, as amended.

Smoke-Free Workplace

CDC encourages all grant recipients to provide a smoke-free workplace and to promote the nonuse of all tobacco products, and Pub. L. 103–227, the Pro-Children Act of 1994, prohibits smoking in certain facilities that receive Federal funds in which education, library, day care, health care, and early childhood development services are provided to children.

Eligible Applicants

Applications may be submitted by public and private non-profit organizations and governments and their agencies. Thus, universities, colleges, research institutions, hospitals, other public and private non-profit organizations are eligible to apply.

Applicant staff must have certification to practice neuropathology (a medical field focusing on examination and study of brain tissues) in the United States or certification to practice pathology (or neurology) in the United States and show, in their curriculum vitae, the extent of their experience in neuropathology.

Note: Effective January 1, 1996, Public Law 104–65 states that an organization described in section 501(c)(4) of the Internal Revenue Code of 1986 which engages in lobbying activities will not be eligible for the receipt of Federal funds constituting an award, grant, cooperative agreement, contract, loan, or any other form.

Availability of Funds

Approximately $65,000 is available in FY 1997 to fund one award. It is expected that the award will begin on or about September 20, 1997, and will be made for a 12-month budget period within a project period of up to 5 years. Funding estimates may vary and are subject to change. Continuation awards within an approved project period will be made on the basis of satisfactory progress and availability of funds.

Use of Funds

Restrictions on Lobbying

Applicants should be aware of restrictions on the use of Department of Health and Human Services (HHS) funds for lobbying of Federal or State legislative bodies. Under the provisions of 31 U.S.C. Section 1352 (which has been in effect since December 23, 1989), recipients (and their subtier contractors) are prohibited from using appropriated Federal funds (other than profits from a Federal contract) for lobbying Congress or any Federal agency in connection with the award of a particular contract, grant, cooperative agreement or loan. This includes grants/cooperative agreements that, in whole or in part, involve conferences for which Federal funds cannot be used directly or indirectly to encourage participants to lobby or to instruct participants on how to lobby.

In addition, the FY 1997 Departments of Labor, HHS, and Education, and Related Agencies Appropriations Act, which became effective October 1, 1996, expressly prohibits the use of 1997 appropriated funds for indirect or ''grass roots'' lobbying efforts that are designed to support or defeat legislation pending before State legislatures. Section 503 of this new law, as enacted by the Omnibus Consolidated Appropriations Act, 1997, Division A, title I, Section 101(e), Pub. L. No. 104–208 (September 30, 1996), provides as follows:

Sec. 503(a) No part of any appropriation contained in this Act shall be used, other than for normal and recognized executive-legislative relationships, for publicity or propaganda purposes, for the preparation, distribution, or use of any kit, pamphlet, booklet, publication, radio, television, or video presentation designed to support or defeat legislation pending before the Congress, * * * except in presentation to the Congress or any State legislative body itself.

Sec. 503(b) No part of any appropriation contained in this Act shall be used to pay the salary or expenses of any grant or contract recipient, or agent acting for such recipient, related to any activity designed to influence legislation or appropriations pending before the Congress or any State legislature.

Background

In 1986, a newly recognized cattle disease, bovine spongiform

encephalopathy (BSE, commonly known as ''mad cow'' disease), was reported in Britain. As of mid-1997, more than 166,000 British cattle have been confirmed with BSE in more than 33,900 herds. The practice of feeding cattle rendered animal protein was shown to be responsible in greatly amplifying the BSE outbreak. Transmission of the BSE agent to domestic cats and other zoo animals, possibly through contaminated feeds, raised concerns that the human population might also be susceptible to this new disease. These concerns were heightened in March 1996 when the Spongiform Encephalopathy Advisory Committee (SAEC) to the government of Britain announced 10 young Creutzfeldt-Jakob disease (CJD) patients with unusual clinical and neuropathological features. In the absence of known recognizable risk factors for CJD or any other plausible explanation for the clustering of these extraordinarily young CJD patients, the British researchers concluded that the patients may represent spread of the BSE agent to the human population.

In addition to the young age at onset, this new variant of CJD has been characterized by atypical clinical features with prominent behavioral changes at the time of clinical presentation and subsequent onset of neurologic abnormalities including ataxia within weeks or months, dementia and myoclonus late in the illness, a duration of illness of at least six months, and nondiagnostic electroencephalographic changes. The specific, uniform neuropathology includes, in both the cerebellum and cerebrum, numerous kuru-type amyloid plaques surrounded by vacuoles and prion protein accumulation at high concentration, indicated by immunocytochemical analysis.

As of May 6, 1997, five additional confirmed and one probable cases of new variant CJD were identified in the United Kingdom and one confirmed case was identified in France. Although a definitive scientific causal association of new variant CJD with BSE has not yet been established, the evidence for a causal link has been accumulating.

Purpose

The purpose of this cooperative agreement is to provide assistance for the development of new diagnostic techniques and a research program to determine the incidence of potentially emerging human spongiform encephalopathies in the United States.

Program Requirements

In conducting activities to achieve the purpose of this program, the recipient shall be responsible for the activities under A., below, and CDC shall be responsible for conducting activities under B., below:

A. Recipient Activities

1. Test the application of novel diagnostic methods to research the incidence of emerging human spongiform encephalopathies.
2. Develop research programs that can be used to monitor the emergence of human spongiform encephalopathies.
3. Identify new cases of human spongiform encephalopathies.
4. Disseminate result of research findings.

B. CDC Activities

Provide assistance in the dissemination of results and other technical assistance as required.

Technical Reporting Requirements

Narrative semiannual progress reports are required and must be submitted no later than 30 days after each semiannual reporting period. The semiannual progress reports must include the following for each program, function, or activity involved: (1) A comparison of actual accomplishments to the goal established for the period; (2) the reasons for failure, if established goals were not met; and (3) other pertinent information including, when appropriate, analysis and explanation of performance costs significantly higher than expected. All manuscripts published as a result of the work supported in part or whole by the cooperative agreement will be submitted with the progress reports.

An annual Financial Status Report (FSR) is required no later than 90 days after the end of each budget period. A final performance report and financial status report are due no later than 90 days after the end of the project period.

An original and two copies of all reports should be submitted to the Grants Management Officer, Grants Management Branch, Procurement and Grants Office, CDC.

Required Format for Application

All applicants must develop their application in accordance with the PHS Form 5161–1 (revised 7/92), information contained in this cooperative agreement announcement, and the instructions outlined below. In order to ensure an objective, impartial, and prompt review, applications which do not conform to these instructions may be disqualified.

1. All pages must be clearly numbered.
2. A complete index to the application and its appendixes must be included.
3. The original and two copies of the application must be submitted unstapled and unbound.
4. Any reprints, brochures, or other enclosures must be copied onto 8½″ by 11″ white paper by the applicant. No bound materials will be accepted.
5. All materials must be typewritten, single spaced, and in unreduced type (no smaller than font size 12) on 8½″ by 11″ white paper, with at least 1″ margins, headers, and footers.
6. All pages must be printed on one side only.

Application Content

The application narrative must not exceed 10 pages (excluding budget and appendixes). Unless indicated otherwise, all information requested below must appear in the narrative.

Materials or information that should be part of the narrative will not be accepted if placed in the appendices. The application narrative must contain the following sections in the order presented below:

1. Background

Discuss the background and need for the proposed project. Demonstrate a clear understanding of the purpose and objectives of this cooperative agreement program.

2. Capacity and Personnel

Describe applicant's past experience in conducting projects/studies similar to that being proposed. Describe applicant's resources, facilities, and professional personnel that will be involved in conducting the project. Include in an appendix curriculum vitae for key professional personnel involved with the project. Describe plans for administration of the project and identify administrative resources/ personnel that will be assigned to the project.

3. Objectives and Technical Approach

Describe specific objectives for the proposed project which are measurable and time-phased and are consistent with the purpose and goals of this cooperative agreement. Present a detailed operational plan for initiating and conducting the project which clearly and appropriately addresses all Recipient Activities (provide a detailed description of first-year activities and a brief overview of activities in subsequent years. Clearly state the proposed length of the project period). Clearly identify specific assigned

responsibilities for all key professional personnel. Include a clear description of applicant's technical approach/methods which are directly relevant to the study objectives to include obtaining study samples. Describe the nature and extent of collaboration with CDC and/or others during various phases of the project. Describe in detail a plan for evaluating study results and for evaluating progress toward achieving project objectives.

4. Budget

Provide in an appendix a budget and accompanying detailed justification for the first-year of the project that is consistent with the purpose and objectives of this program. Also, provide estimated total budget for each subsequent year. If requesting funds for contracts, provide the following information for each proposed contract: (1) Name of proposed contractor, (2) breakdown and justification for estimated costs, (3) description and scope of activities to be performed by contractor, (4) period of performance, and (5) method of contractor selection (e.g., sole-source or competitive solicitation).

5. Human Subjects

Whether or not exempt from DHHS regulations, if the proposed project involves human subjects, describe in an appendix adequate procedures for the protection of human subjects. Also, ensure that women, racial and ethnic minority populations are appropriately represented in applications for research involving human subjects by including a description of the composition of the proposed study population (for example, addressing the inclusion of women and members of minority groups and their sub-populations in the section that will describe the research design). Where clear and compelling rationale exist that inclusion is inappropriate or not feasible, this situation must be explained as part of the application. See the Other Requirements Section for additional information.

Evaluation Criteria

The applications will be reviewed and evaluated according to the following criteria:

1. Background and Need (5 points)

Extent to which applicant's discussion of the background for the proposed project demonstrates a clear understanding of the purpose and objectives of this cooperative agreement program. Extent to which applicant illustrates and justifies the need for the proposed project that is consistent with the purpose and objectives of this cooperative agreement program.

2. Capacity (70 points total)

a. Extent to which applicant describes adequate resources and facilities (both technical and administrative) for conducting the project. (10 points)

b. Extent to which applicant documents that professional personnel involved in the project are qualified and have past experience and achievements in research related to transmissible spongiform encephalopathies, particularly in the application of CJD diagnostic methods such as neuropathology, immunocytochemistry, Western blot testing, and genetic analysis in determining the incidence of emerging human spongiform encephalopathies; these qualifications have to be evidenced by curriculum vitae, publications, etc. Applicants must provide curriculum vitae of their program staff and relevant scientific articles published in peer-reviewed journals within the last five years. (40 points)

c. Extent to which applicant demonstrates the ability to collaborate with as many neuropathologists and/or pathologists working in human spongiform encephalopathy research to include how study samples will be collected. (20 points)

3. Objectives and Technical Approach (25 points total)

a. Extent to which applicant describes specific objectives of the proposed project which are consistent with the purpose and goals of this cooperative agreement program and which are measurable and time-phased. (5 points)

b. Extent to which applicant presents a detailed operational plan for initiating and conducting the project, which clearly and appropriately addresses all Recipient Activities. Extent to which applicant clearly identifies specific assigned responsibilities for all key professional personnel. Extent to which the plan clearly describes applicant's technical approach/methods for conducting the proposed studies and extent to which the plan is adequate to accomplish the objectives. Extent to which applicant describes specific study protocols or plans for the development of study protocols that are appropriate for achieving project objectives. If the proposed project involves human subjects, whether or not exempt from the DHHS regulations, the extent to which adequate procedures are described for the protection of human subjects. Note: Objective Review Group (ORG) recommendations on the adequacy of protections include: (1) Protections appear adequate and there are no comments to make or concerns to raise, (2) protections appear adequate, but there are comments regarding the protocol, (3) protections appear inadequate and the ORG has concerns related to human subjects, or (4) disapproval of the application is recommended because the research risks are sufficiently serious and protection against the risks are inadequate as to make the entire application unacceptable. The degree to which the applicant has met the CDC policy requirements regarding the inclusion of women, ethnic, and racial groups in proposed research. This includes: (1) The proposed plan for the inclusion of both sexes and racial and ethnic minority populations for appropriate representation; (2) the proposed justification when representation is limited or absent; (3) a statement as to whether the design of the study is adequate to measure differences when warranted; and (4) documentation of plans for recruitment and outreach for study participants that includes the process of establishing partnerships with community(ies) and recognition of mutual benefits. (15 points)

c. Extent to which applicant provides a detailed and adequate plan for evaluating study results and for evaluating progress toward achieving project objectives. (5 points)

4. Budget (not scored)

Extent to which the proposed budget is reasonable, clearly justifiable, and consistent with the intended use of cooperative agreement funds.

Executive Order 12372 Review

This program is not subject to Executive Order 12372 Review.

Public Health System Reporting Requirements

This program is not subject to the Public Health System Reporting Requirements.

Catalog of Federal Domestic Assistance Number

The Catalog of Federal Domestic Assistance Number is 93.283.

Other Requirements

Human Subjects

If the proposed project involves research on human subjects, the applicant must comply with the Department of Health and Human Services Regulations (45 CFR part 46) regarding the protection of human subjects. Assurance must be provided to demonstrate that the project will be

subject to initial and continuing review by an appropriate institutional review committee. The applicant will be responsible for providing evidence of this assurance in accordance with the appropriate guidelines and form provided in the application kit.

Women, Racial and Ethnic Minorities

It is the policy of the Centers for Disease Control and Prevention (CDC) and the Agency for Toxic Substances and Disease Registry (ATSDR) to ensure that individuals of both sexes and the various racial and ethnic groups will be included in CDC/ATSDR-supported research projects involving human subjects, whenever feasible and appropriate. Racial and ethnic groups are those defined in OMB Directive No. 15 and include American Indian, Alaskan Native, Asian, Pacific Islander, Black and Hispanic. Applicants shall ensure that women, racial and ethnic minority populations are appropriately represented in applications for research involving human subjects. Where clear and compelling rationale exist that inclusion is inappropriate or not feasible, this situation must be explained as part of the application. This policy does not apply to research studies when the investigator cannot control the race, ethnicity and/or sex of subjects. Further guidance to this policy is contained in the **Federal Register**, Vol. 60, No. 179, pages 47947-47951, dated Friday, September 15, 1995.

Application Submission and Deadline

The original and two copies of the application PHS Form 5161–1 (revised 7/92, OMB Number 0937–0189) must be submitted to Sharron Orum, Grants Management Officer, Grants Management Branch, Procurement and Grants Office, Centers for Disease Control and Prevention (CDC), 255 East Paces Ferry Road, NE., Room 305, Mailstop E–18, Atlanta, Georgia 30305, on or before August 8, 1997.

1. *Deadline:* Applications shall be considered as meeting the deadline if they are either:

Received on or before the deadline date; or

b. Sent on or before the deadline date and received in time for submission to the objective review group. (Applicants must request a legibly dated U.S. Postal Service postmark or obtain a legibly dated receipt from a commercial carrier or U.S. Postal Service. Private metered postmarks shall not be acceptable as proof of timely mailing.)

2. *Late Applications:* Applications which do not meet the criteria in 1.a. or 1.b. above are considered late applications. Late applications will not be considered in the current competition and will be returned to the applicant.

Where To Obtain Additional Information

To receive additional written information, call (404) 332–4561. You will be asked to leave your name, address, and telephone number. Please refer to Announcement Number 793. You will receive a complete program description, information on application procedures and application forms. If you have questions after reviewing the contents of all the documents, business management technical assistance may be obtained from Gladys T. Gissentanna, Grant Management Specialist, Grants Management Branch, Procurement and Grants Office, Centers for Disease Control and Prevention (CDC), 255 East Paces Ferry Road, NE., Room 314, Mailstop E–18, Atlanta, GA 30305, telephone: (404) 842–6801. Programmatic technical assistance may be obtained from Lawrence B. Schonberger, MD, National Center for Infectious Diseases, Centers for Disease Control and Prevention (CDC), Atlanta, GA 30333, telephone: (404) 639–3091, Email address: LBS1@CDC.GOV. You may also obtain this announcement from one of two Internet sites on the actual publication date: CDC's homepage at http://www.cdc.gov or the Government Printing Office homepage (including free on-line access to the **Federal Register** at http://www.access.gpo.gov). Other CDC announcements are also listed on the Internet on the CDC homepage.

Please refer to Announcement Number 793 when requesting information regarding this program.

Potential applicants may obtain a copy of Healthy People 2000 (Full Report, Stock No. 017-001–00474–0) or Healthy People 2000 (Summary Report, Stock No. 017–001–00473–1) referenced in the Introduction through the Superintendent of Documents, Government Printing Office, Washington, DC 20402–9325, telephone: (202) 512–1800.

Dated: July 1, 1997.

Joseph R. Carter,

Acting Associate Director for Management and Operations, Centers for Disease Control and Prevention (CDC).

[FR Doc. 97–17847 Filed 7–8–97; 8:45 am]

BILLING CODE 4163–18–P

DEPARTMENT OF HEALTH AND HUMAN SERVICES

Centers for Disease Control and Prevention

Disease, Disability, and Injury Prevention and Control Special Emphasis Panel (SEP): Cooperative Agreements for Competitive Innovations in Syphilis Prevention in the United States: Reconsidering the Epidemiology and Involving Communities, Phase II: Evaluation of a Community Intervention, Program Announcement 523: Meeting

In accordance with section 10(a)(2) of the Federal Advisory Committee Act (Pub. L. 92–463), the Centers for Disease Control and Prevention (CDC) announces the following committee meeting.

Name: Disease, Disability, and Injury Prevention and Control SEP: Cooperative Agreements for Competitive Innovations in Syphilis Prevention in the United States: Reconsidering the Epidemiology and Involving Communities, Phase II: Evaluation of a Community Intervention, Program Announcement 523.

Time and Date: 8:30 a.m.–5 p.m., August 12, 1997.

Place: 11 Corporate Square Boulevard, Conference Room A, Atlanta, Georgia 30329.

Status: Closed.

Matters to be discussed: The meeting will include the review, discussion, and evaluation of applications received in response to Program Announcement 523.

The meeting will be closed to the public in accordance with provisions set forth in section 552b(c) (4) and (6), Title 5 U.S.C., and the Determination of the Associate Director for Management and Operations, CDC, pursuant to Pub. L. 92–463.

Contact Person For More Information: John R. Lehnherr, Chief, Prevention Support Office, National Center for HIV, STD, and TB Prevention, CDC, M/S E07, 1600 Clifton Road, NE, Atlanta, Georgia 30333, telephone 404/639–8025.

Dated: July 2, 1997.

Carolyn J. Russell,

Director, Management Analysis and Services Office, Centers for Disease Control and Prevention (CDC).

[FR Doc. 97–17849 Filed 7–8–97; 8:45 am]

BILLING CODE 4163–18–P

DEPARTMENT OF HEALTH AND HUMAN SERVICES

Centers for Disease Control and Prevention

Disease, Disability, and Injury Prevention and Control Special Emphasis Panel (SEP): Cooperative Agreements To Conduct Studies of Illnesses Among Persian Gulf War Veterans, Program Announcement 748: Meeting

In accordance with section 10(a)(2) of the Federal Advisory Committee Act (Pub. L. 92–463), the Centers for Disease Control and Prevention (CDC) announces the following committee meeting.

Name: Disease, Disability, and Injury Prevention and Control SEP: Cooperative Agreements to Conduct Studies of Illnesses Among Persian Gulf War Veterans, Program Announcement 748.

Time and Date: 8:30 a.m.–4:30 p.m., August 12, 1997, 8:30 a.m.–4:30 p.m., August 13, 1997.

Place: Lenox Inn, 3387 Lenox Road, Atlanta, Georgia 30326.

Status: Closed.

Matters to be Discussed: The meeting will include the review, discussion, and evaluation of applications received in response to Program Announcement 748.

The meeting will be closed to the public in accordance with provisions set forth in section 552b(c) (4) and (6), Title 5 U.S.C., and the Determination of the Associate Director for Management and Operations, CDC, pursuant to Pub. L. 92–463.

Contact Person for More Information: Phillip M. Talboy, Deputy Chief, Veterans' Health Activity Working Group, National Center for Environmental Health, CDC, M/S F28, 4770 Buford Highway, NE, Atlanta, Georgia 30341, telephone 770/488–7300.

Dated: July 2, 1997.

Carolyn J. Russell,

Director, Management Analysis and Services Office, Centers for Disease Control and Prevention (CDC).

[FR Doc. 97–17850 Filed 7–8–97; 8:45 am]

BILLING CODE 4163–18–P

DEPARTMENT OF HEALTH AND HUMAN SERVICES

Food and Drug Administration

Request for Nominations for Nonvoting Representatives of Consumer and Industry Interests on Public Advisory Panels or Committees

AGENCY: Food and Drug Administration, HHS.

ACTION: Notice.

SUMMARY: The Food and Drug Administration (FDA) is requesting nominations for nonvoting consumer representatives and nonvoting industry representatives to serve on certain device panels of the Medical Devices Advisory Committee in the Center for Devices and Radiological Health. Nominations will be accepted for current vacancies and for those that will or may occur through June 30, 1998.

FDA has a special interest in ensuring that women, minority groups, individuals with disabilities, and small businesses are adequately represented on advisory committees and, therefore, encourages nominations for appropriately qualified candidates from these groups, as well as nominations from small businesses that manufacture medical devices subject to the regulations.

DATES: Nominations should be received by August 8, 1997, for vacancies listed in this notice.

ADDRESSES: All nominations and curricula vitae for consumer representatives should be submitted in writing to Annette J. Funn (address below). All nominations and curricula vitae (which includes nominee's office address and telephone number) for industry representatives should be submitted in writing to Kathleen L. Walker (address below).

FOR FURTHER INFORMATION CONTACT:

Regarding consumer representatives: Annette J. Funn, Office of Consumer Affairs (HFE–88), Food and Drug Administration, 5600 Fishers Lane, Rockville, MD 20857, 301–827–5006.

Regarding industry representatives: Kathleen L. Walker, Center for Devices and Radiological Health (HFZ–17), Food and Drug Administration, 2098 Gaither Rd., Rockville, MD 20850, 301–594–1283, ext. 114.

SUPPLEMENTARY INFORMATION: FDA is requesting nominations for nonvoting members representing consumer and industry interests for the vacancies listed below:

Medical Devices Panels	Approximate Date Representative is Needed	
	Consumer	Industry
Anesthesiology and Respiratory Therapy Devices Panel	December 1, 1997	December 1, 1997
Clinical Chemistry and Clinical Toxicology Devices Panel	March 1, 1998	NV
Dental Products Panel (Medical Devices)	NV	November 1, 1997
General Hospital and Personal Use Devices Panel	NV	January 1, 1998
Microbiology Devices Panel	March 1, 1998	NV
Ophthalmic Devices Panel	NV	November 1, 1997

NV = No vacancy

Functions

The functions of the medical device panels are to: (1) Review and evaluate data on the safety and effectiveness of marketed and investigational devices and make recommendations for their regulation; (2) advise the Commissioner of Food and Drugs regarding recommended classification or reclassification of these devices into one of three regulatory categories; (3) advise on any possible risks to health associated with the use of devices; (4) advise on formulation of product development protocols; (5) review premarket approval applications for medical devices; (6) review guidelines and guidance documents; (7) recommend exemption to certain devices from the application of portions of the Federal Food, Drug, and Cosmetic Act; (8) advise on the necessity to ban a device; (9) respond to requests from the agency to review and make recommendations on specific issues or problems concerning the safety and effectiveness of devices; and (10) make recommendations on the quality in the design of clinical studies regarding the safety and effectiveness of marketed and investigational devices.

Consumer and Industry Representation

Section 520(f)(3) of the Federal Food, Drug, and Cosmetic Act (the act)(21 U.S.C. 360j(f)(3)), as amended by the Medical Device Amendments of 1976,

provides that each medical device panel include as members one nonvoting representative of consumer interests and one nonvoting representative of interests of the medical device manufacturing industry.

Nomination Procedures

Consumer Representatives

Any interested person may nominate one or more qualified persons as a member of a particular advisory committee or panel to represent consumer interests as identified in this notice. Self-nominations are also accepted. To be eligible for selection, the applicant's experience and/or education will be evaluated against Federal civil service criteria for the position to which the person will be appointed.

Nominations shall include a complete curriculum vitae of each nominee and shall state that the nominee is aware of the nomination, is willing to serve as a member, and appears to have no conflict of interest that would preclude membership. FDA will ask the potential candidates to provide detailed information concerning such matters as financial holdings, employment, and research grants and/or contracts to permit evaluation of possible sources of conflict of interest. The nomination should state whether the nominee is interested only in a particular advisory committee or panel or in any advisory committee or panel. The term of office is up to 4 years, depending on the appointment date.

Industry Representatives

Any organization in the medical device manufacturing industry (industry interests) wishing to participate in the selection of an appropriate member of a particular panel may nominate one or more qualified persons to represent industry interests. Persons who nominate themselves as industry representatives for the panels will not participate in the selection process. It is, therefore, recommended that all nominations be made by someone with an organization, trade association, or firm who is willing to participate in the selection process.

Nominees shall be full-time employees of firms that manufacture products that would come before the panel, or consulting firms that represent manufacturers. Nominations shall include a complete curriculum vitae of each nominee. The term of office is up to 4 years, depending on the appointment date.

Selection Procedures

Consumer Representatives

Selection of members representing consumer interests is conducted through procedures which include use of a consortium of consumer organizations which has the responsibility for recommending candidates for the agency's selection. Candidates should possess appropriate qualifications to understand and contribute to the committee's work.

Industry Representatives

Regarding nominations for members representing the interests of industry, a letter will be sent to each person that has made a nomination, and to those organizations indicating an interest in participating in the selection process, together with a complete list of all such organizations and the nominees. This letter will state that it is the responsibility of each nominator or organization indicating an interest in participating in the selection process to consult with the others in selecting a single member representing industry interests for the panel within 60 days after receipt of the letter. If no individual is selected within 60 days, the agency will select the nonvoting member representing industry interests.

This notice is issued under the Federal Advisory Committee Act (5 U.S.C. app. 2) and 21 CFR part 14, relating to advisory committees.

Dated: June 30, 1997.

Michael A. Friedman,

Deputy Commissioner for Operations.

[FR Doc. 97–17794 Filed 7–8–97; 8:45 am]

BILLING CODE 4160–01–F

DEPARTMENT OF HEALTH AND HUMAN SERVICES

Food and Drug Administration

Request for Nominations for Voting Members on Public Advisory Panels or Committees

AGENCY: Food and Drug Administration, HHS.

ACTION: Notice.

SUMMARY: The Food and Drug Administration (FDA) is requesting nominations for voting members to serve on certain device panels of the Medical Devices Advisory Committee, the National Mammography Quality Assurance Advisory Committee, the Device Good Manufacturing Practice Advisory Committee, and the Technical Electronic Product Radiation Safety Standards Committee in the Center for Devices and Radiological Health (CDRH). Nominations will be accepted for current vacancies and those that will or may occur through June 30, 1998.

FDA has a special interest in ensuring that women, minority groups, and individuals with disabilities are adequately represented on advisory committees and, therefore, encourages nominations of qualified candidates from these groups.

DATES: Because scheduled vacancies occur on various dates throughout each year, no cutoff date is established for the receipt of nominations. However, when possible, nominations should be received at least 6 months before the date of scheduled vacancies for each year, as indicated in this notice.

ADDRESSES: All nominations and curricula vitae for the device panels should be sent to Nancy J. Pluhowski, Office of Device Evaluation (HFZ–400), CDRH, Food and Drug Administration, 9200 Corporate Blvd., Rockville, MD 20850.

All nominations and curricula vitae for the National Mammography Quality Assurance Advisory Committee, excluding consumer representatives, should be sent to Charles A. Finder, CDRH (HFZ–240), Food and Drug Administration, 1350 Piccard Dr., Rockville, MD 20850.

All nominations and curricula vitae for government and industry representatives for the Technical Electronic Product Radiation Safety Standards Committee should be sent to Orhan Suleiman, CDRH (HFZ–240), (address above).

All nominations and curricula vitae for health professionals, industry representatives, and government representatives for the Device Good Manufacturing Practice Advisory Committee should be sent to Sharon Kalokerinos, CDRH (HFZ–300), Food and Drug Administration, 2094 Gaither Rd., Rockville, MD 20850.

All nominations and curricula vitae for consumer representatives for the National Mammography Quality Assurance Advisory Committee, general public representatives for the Device Good Manufacturing Practice Advisory Committee and the Technical Electronic Product Radiation Safety Standards Committee, should be sent to Annette Funn, Office of Consumer Affairs (HFE–88), Food and Drug Administration, 5600 Fishers Lane, Rockville, MD 20857.

FOR FURTHER INFORMATION CONTACT: Kathleen L. Walker, Center for Devices and Radiological Health (HFZ–17), Food and Drug Administration, 2098 Gaither

Rd., Rockville, MD 20850, 301–594–1283, ext. 114.

SUPPLEMENTARY INFORMATION: FDA is requesting nominations of voting members for vacancies listed below.

1. *Anesthesiology and Respiratory Therapy Devices Panel*: Two vacancies immediately, three vacancies occurring November 30, 1997; anesthesiologists, pulmonary medicine specialists, or other experts who have specialized interests in ventilatory support, pharmacology, physiology, or the effects and complications of anesthesia.

2. *Circulatory System Devices Panel*: Two vacancies immediately; interventional cardiologists, electrophysiologists, invasive (vascular) radiologists, vascular and cardiothoracic surgeons, and cardiologists with special interest in congestive heart failure.

3. *Clinical Chemistry and Clinical Toxicology Devices Panel*: Three vacancies occurring February 28, 1998; doctors of medicine or philosophy with experience in clinical chemistry, clinical toxicology, clinical pathology, clinical laboratory medicine, or oncology.

4. *Dental Products Panel*: Two vacancies immediately, one vacancy occurring October 31, 1997; dentists who have expertise in the areas of lasers, endosseous implants, temporomandibular joint implants, dental materials and/or endodontics; or experts in bone physiology relative to the oral and maxillofacial area.

5. *Ear, Nose, and Throat Devices Panel*: Three vacancies occurring October 31, 1997; audiologists, otolaryngologists, neurophysiologist, statisticians, or electrical or biomedical engineers.

6. *Gastroenterology and Urology Devices Panel*: Three vacancies occurring December 31, 1997; nephrologists with expertise in diagnostic and therapeutic management of adult and pediatric patient populations.

7. *General and Plastic Surgery Devices Panel*: Two vacancies immediately, three vacancies occurring August 31, 1997; general surgeons, plastic surgeons, biomaterials experts, laser experts, wound healing experts or endoscopic surgery experts.

8. *General Hospital and Personal Use Devices Panel*: Five vacancies immediately, two vacancies occurring December 31, 1997; internists, pediatricians, neonatologists, gerontologists, nurses, biomedical engineers or microbiologists/infection control practitioners or experts.

9. *Hematology and Pathology Devices Panel*: One vacancy occurring February 28, 1998; cytopathologists and histopathologists; hematologists (blood banking, coagulation and hemostasis); molecular biologists (nucleic acid amplification techniques), and hematopathologists (oncology).

10. *Immunology Devices Panel*: Two vacancies immediately, one vacancy occurring February 28, 1998; persons with experience in medical, surgical, or clinical oncology, internal medicine, clinical immunology, allergy, or clinical laboratory medicine.

11. *Microbiology Devices Panel*: Three vacancies occurring February 28, 1998; infectious disease clinicians; clinical microbiologists with expertise in antimicrobial and antimycobacterial susceptibility testing, chemotherapy and in vitro diagnostic (IVD) applications; clinical virologists with expertise in clinical diagnosis and IVD assays; clinical oncologists experienced with antitumor resistance and susceptibility; and molecular biologists.

12. *Obstetrics and Gynecology Devices Panel*: Three vacancies immediately, two vacancies occurring January 31, 1998; experts in reproductive endocrinology, endoscopy, electrosurgery, laser surgery, assisted reproductive technologies, and contraception; biostatisticians and engineers with experience in obstetrics/gynecology devices; urogynecologists; experts in breast care; and experts in gynecology in the older patient.

13. *Ophthalmic Devices Panel*: Three vacancies occurring October 31, 1997; ophthalmologists specializing in glaucoma, surgical pediatric ophthalmology (experienced in correction of aphakia), retinal diseases or corneal diseases; optometrists with expertise in contact lenses, or specialists in clinical study design.

14. *Orthopedic and Rehabilitation Devices Panel*: Three vacancies immediately, two vacancies occurring August 31, 1997; orthopedic surgeons experienced with prosthetic ligament devices, joint implants, or spinal instrumentation; physical therapists experienced in spinal cord injuries, neurophysiology, electrotherapy, and joint biomechanics; rheumatologists; or biomedical engineers.

15. *Radiological Devices Panel*: One vacancy immediately, two vacancies occurring January 31, 1998; physicians and scientists with expertise in nuclear medicine, diagnostic or therapeutic radiology, mammography, thermography, transillumination, hyperthermia cancer therapy, bone densitometry, magnetic resonance, computed tomography, or ultrasound.

16. *National Mammography Quality Assurance Advisory Committee*: Seven vacancies occurring January 31, 1998; five shall include physicians, practitioners, and other health professionals whose clinical practice, research specialization, or professional expertise include a significant focus on mammography; and two shall include consumer representatives from among national breast cancer or consumer health organizations with expertise in mammography.

17. *Device Good Manufacturing Practice Advisory Committee*: Four vacancies occurring May 31, 1998; one government representative, one health professional, one industry representative, and one general public representative.

18. *Technical Electronic Product Radiation Safety Standards Committee*: Five vacancies occurring December 31, 1997; two government representatives, one industry representative, and two general public representatives.

Functions

Medical Devices Panels

The functions of the panels are to: (1) Review and evaluate data on the safety and effectiveness of marketed and investigational devices and make recommendations for their regulation; (2) advise the Commissioner of Food and Drugs regarding recommended classification or reclassification of these devices into one of three regulatory categories; (3) advise on any possible risks to health associated with the use of devices; (4) advise on formulation of product development protocols; (5) review premarket approval applications for medical devices; (6) review guidelines and guidance documents; (7) recommend exemption to certain devices from the application of portions of the Federal Food, Drug, and Cosmetic Act (the act); (8) advise on the necessity to ban a device; (9) respond to requests from the agency to review and make recommendations on specific issues or problems concerning the safety and effectiveness of devices; and (10) make recommendations on the quality in the design of clinical studies regarding the safety and effectiveness of marketed and investigational devices.

The Dental Products Panel also functions at times as a dental drug panel. The functions of the drug panel are to: (1) Evaluate and recommend whether various prescription drug products should be changed to over-the-counter status; and (2) evaluate data and make recommendations concerning the approval of new dental drug products for human use.

National Mammography Quality Assurance Advisory Committee

The functions of the committee are to advise FDA on: (1) Developing appropriate quality standards and regulations for mammography facilities; (2) developing appropriate standards and regulations for bodies accrediting mammography facilities under this program; (3) developing regulations with respect to sanctions; (4) developing procedures for monitoring compliance with standards; (5) establishing a mechanism to investigate consumer complaints; (6) reporting new developments concerning breast imaging which should be considered in the oversight of mammography facilities; (7) determining whether there exists a shortage of mammography facilities in rural and health professional shortage areas and determining the effects of personnel on access to the services of such facilities in such areas; (8) determining whether there will exist a sufficient number of medical physicists after October 1, 1999; and (9) determining the costs and benefits of compliance with these requirements.

Device Good Manufacturing Practice Advisory Committee

The functions of the committee are to review proposed regulations for good manufacturing practices governing the methods used in, and the facilities and controls used for, the manufacturing, packing, storage, and installation of devices, and make recommendations on the feasibility and reasonableness of the proposed regulations. The committee also reviews and makes recommendations on proposed guidelines developed to assist the medical device industry in meeting the good manufacturing practice requirements, and provides advice with regard to any petition submitted by a manufacturer for an exemption or variance from good manufacturing practice regulations.

Section 520 of the act, as amended (21 U.S.C. 360(j)), provides that the Device Good Manufacturing Practice Advisory Committee shall be composed of nine members as follows: Three of the members shall be appointed from persons who are officers or employees of any Federal, State, or local government, two shall be representatives of interests of the device manufacturing industry, two shall be representatives of the interests of physicians and other health professionals, and two shall be representatives of the interests of the general public.

Technical Electronic Product Radiation Safety Standards Committee

The function of the committee is to advise on the technical feasibility, reasonableness, and practicability of performance standards for electronic products to control the emission of radiation from such products. The committee may recommend electronic product radiation safety standards for consideration.

Section 534(f) of the act, as amended by the Safe Medical Devices Act of 1990 (21 U.S.C. 360kk(f)), provides that the Technical Electronic Product Radiation Safety Standards Committee include five members from governmental agencies, including State or Federal Governments, five members from the affected industries, and five members from the general public, of which at least one shall be a representative of organized labor.

Qualifications

Medical Device Panels

Persons nominated for membership on the panels shall have adequately diversified experience appropriate to the work of the panel in such fields as clinical and administrative medicine, engineering, biological and physical sciences, statistics, and other related professions. The nature of specialized training and experience necessary to qualify the nominee as an expert suitable for appointment may include experience in medical practice, teaching, and/or research relevant to the field of activity of the panel. The particular needs at this time for each panel are shown above. The term of office is up to 4 years, depending on the appointment date.

National Mammography Quality Assurance Advisory Committee

Persons nominated for membership should be physicians, practitioners, and other health professionals, whose clinical practice, research specialization, or professional expertise include a significant focus on mammography and individuals identified with consumer interests. Prior experience on Federal public advisory committees in the same or similar subject areas will also be considered relevant professional expertise. The particular needs are shown above. The term of office is up to 4 years, depending on the appointment date.

Device Good Manufacturing Practice Advisory Committee

Persons nominated for membership as a government representative or health professional should have knowledge of or expertise in any one or more of the following areas: quality assurance concerning the design, manufacture, and use of medical devices. To be eligible for selection as a representative of the general public or industry, nominees should possess appropriate qualifications to understand and contribute to the committee's work. The particular needs are shown above. The term of office is up to 4 years, depending on the appointment date.

Technical Electronic Product Radiation Safety Standards Committee

Persons nominated must be technically qualified by training and experience in one or more fields of science or engineering applicable to electronic product radiation safety. The particular needs are shown above. The term of office is up to 4 years, depending on the appointment date.

Nomination Procedures

Any interested person may nominate one or more qualified persons for membership on one or more of the advisory panels or advisory committees. Self-nominations are also accepted. Nominations shall include a complete curriculum vitae of each nominee, current business address and telephone number, and shall state that the nominee is aware of the nomination, is willing to serve as a member, and appears to have no conflict of interest that would preclude membership. FDA will ask the potential candidates to provide detailed information concerning such matters as financial holdings, employment, and research grants and/or contracts to permit evaluation of possible sources of conflict of interest.

Consumer/General Public Representatives

Any interested person may nominate one or more qualified persons as a member of a particular advisory committee or panel to represent consumer interests as identified in this notice. To be eligible for selection, the applicant's experience and/or education will be evaluated against Federal civil service criteria for the position to which the person will be appointed.

Selection of members representing consumer interests is conducted through procedures which include use of a consortium of consumer organizations which has the responsibility for recommending candidates for the agency's selection. Candidates should possess appropriate qualifications to understand and contribute to the committee's work.

Nominations shall include a complete curriculum vitae of each nominee and

shall state the nominee is aware of the nomination, is willing to serve as a member, and appears to have no conflict of interest that would preclude membership. FDA will ask the potential candidates to provide detailed information concerning such matters as financial holdings, employment, and research grants and/or contracts to permit evaluation of possible sources of conflict of interest. The nomination should state whether the nominee is interested only in a particular advisory committee or in any advisory committee. The term of office is up to 4 years, depending on the appointment date.

This notice is issued under the Federal Advisory Committee Act (5 U.S.C. app. 2) and 21 CFR part 14 relating to advisory committees.

Dated: June 30, 1997.

Michael A. Friedman,

Deputy Commissioner for Operations.

[FR Doc. 97–17795 Filed 7–8–97; 8:45 am]

BILLING CODE 4160–01–P

DEPARTMENT OF HEALTH AND HUMAN SERVICES

Food and Drug Administration

Clinical Studies of Safety and Effectiveness of Orphan Products; Availability of Grants; Request for Applications

AGENCY: Food and Drug Administration, HHS.

ACTION: Notice.

SUMMARY: The Food and Drug Administration (FDA) is announcing the following changes to its Orphan Products Development (OPD) grant program for fiscal year (FY) 1998. The previous announcement of this program, which was published in the **Federal Register** of June 6, 1996, is superseded by this announcement. In the future, a new announcement will be published annually.

DATES: Application receipt dates are: October 15, 1997, and March 15, 1998. If the receipt date falls on a weekend, it will be extended to Monday; if the date falls on a holiday, it will be extended to the following workday.

ADDRESSES: Application forms are available from, and completed applications should be submitted to: Robert L. Robins, Grants Management Officer, Division of Contracts and Procurement Management (HFA–520), Food and Drug Administration, 5600 Fishers Lane, Park Bldg., rm. 3–40, Rockville, MD 20857, 301–443–6170. (Applications hand-carried or commercially delivered should be addressed to the Park Bldg., 12420 Parklawn Dr., rm. 3–40, Rockville, MD 20852.)

FOR FURTHER INFORMATION CONTACT:

Regarding the administrative and financial management aspects of this notice: Robert L. Robins (address above).

Regarding the programmatic aspects of this notice: Ronda A. Balham, Office of Orphan Products Development (HF–35), Food and Drug Administration, 5600 Fishers Lane, rm. 8–73, Rockville, MD 20857, 301–827–3666.

SUPPLEMENTARY INFORMATION: FDA is announcing the anticipated availability of funds for FY 1998 for awarding grants to support clinical trials on the safety and effectiveness of products for a rare disease or condition (i.e., one with a prevalence, not incidence, of fewer than 200,000 people in the United States). Contingent on availability of FY 1998 funds, it is anticipated that $11.3 million will be available, of which 3.5 million will be for noncompeting continuation awards. This will leave $7.8 million for funding approximately 30 new applications. Any phase clinical trial is eligible for up to $100,000 in direct costs per annum plus applicable indirect costs for up to 3 years. Phase 2 and 3 clinical trials are eligible for up to $200,000 in direct costs per annum plus applicable indirect costs for up to 3 years.

FDA will support the clinical studies covered by this notice under section 301 of the Public Health Service Act (the PHS act) (42 U.S.C. 241). FDA's research program is described in the Catalog of Federal Domestic Assistance, No. 93.103.

The Public Health Service (PHS) strongly encourages all grant recipients to provide a smoke-free work place and to discourage the use of all tobacco products. This is consistent with the PHS mission to protect and advance the physical and mental health of the American people.

PHS urges applicants to submit work plans that address specific objectives of ''Healthy People 2000.'' Potential applicants may obtain a copy of ''Healthy People 2000'' (Full Report, stock No. 017–001–00474–0) through the Superintendent of Documents, Government Printing Office, Washington, DC 20402–9325, 202–512–1800.

PHS policy is that applicants for PHS clinical research grants are required to include minorities and women in study populations so that research findings can be of benefit to all persons at risk of the disease, disorder, or condition under study; special emphasis must be placed on the need for inclusion of minorities and women in studies of diseases, disorders, and conditions which disproportionately affect them. This policy is intended to apply to males and females of all ages. If women or minorities are excluded or inadequately represented in clinical research, particularly in proposed population-based studies, a clear compelling rationale must be provided.

I. Program Research Goals

OPD was established to identify and facilitate the availability of orphan products. In the OPD grant program, orphan products are defined as drugs, biologics, medical devices, and foods for medical purposes which are indicated for a rare disease or condition (i.e., one with a prevalence, not incidence, of fewer than 200,000 people in the United States). Diagnostic tests and vaccines will qualify only if the U.S. population of intended use is lower than 200,000 per annum.

One way to make orphan products available is to support clinical research to determine whether the products are safe and effective. All funded studies are subject to the requirements of the Federal Food, Drug, and Cosmetic Act (the act) and regulations issued thereunder. The grants are funded under the legislative authority of section 301 of the PHS Act (42 U.S.C 241).

The goal of FDA's OPD grant program is the clinical development of products for use in rare diseases or conditions where no current therapy exists or where current therapy would be improved. FDA provides grants to conduct clinical studies intended to provide data acceptable to the agency which will either result in or substantially contribute to approval of these products. Applicants should keep this goal in mind and must include an explanation in the ''Background and Significance'' section of the application of how their proposed study will either facilitate product approval or provide essential data needed for product development. Information regarding meetings and/or discussions with FDA reviewing division staff about the product to be studied should also be provided as an appendix to the application. This information is extremely important for the review process.

Except for medical foods that do not require premarket approval, FDA will only consider awarding grants to support clinical studies for determining whether the products are safe and

effective for premarket approval under the act (21 U.S.C. 301 *et seq.*) or under section 351 of the PHS Act (42 U.S.C. 262). All studies of new drug and biological products must be conducted under the FDA's investigational new drug (IND) procedures and studies of medical devices must be conducted under the investigational device exemption (IDE) procedures. Studies of approved products to evaluate new orphan indications are also acceptable; however, these are also required to be conducted under an IND or IDE to support a change in official labeling. (See section V.B of this document ''Program Review Criteria'' for critical requirements concerning IND/IDE status of products to be studied under these grants.)

Studies submitted for the larger grants ($200,000) must be continuing in phase 2 or phase 3 of investigation. Phase 2 trials include controlled clinical studies conducted to evaluate the effectiveness of the product for a particular indication in patients with the disease or condition and to determine the common or short-term side effects and risks associated with it. Phase 3 trials gather additional information about effectiveness and safety that is necessary to evaluate the overall risk-benefit relationship of the product and to provide an adequate basis for physician labeling. Studies submitted for the smaller grants ($100,000) may be phase 1, 2, or 3 trials. Budgets for all years of requested support may not exceed the $200,000 or $100,000 limitation, whichever is applicable.

Applications must propose a clinical trial of one therapy for one indication. The applicant must provide supporting evidence that a sufficient quantity of the product to be investigated is available to the applicant in the form needed for the clinical trial. The applicant must also provide supporting evidence that the patient population has been surveyed and that there is reasonable assurance that the necessary number of eligible patients is available for the study.

Funds may be requested in the budget for travel to FDA to meet with reviewing division staff about product development progress.

II. Human Subject Protection and Informed Consent

A. Research Involving Human Subjects

Applicants are advised that the section on human subjects in the application kit entitled ''Section C. Specific Instructions—Forms, Item 4, Human Subjects,'' on pages 7 and 8 of the application kit, should be carefully reviewed for the certification of Institutional Review Board (IRB) approval requirements. Documentation of IRB approval for every participating center is required to be on file with the Grants Management Officer, FDA. The goal should be to include enough information on the protection of human subjects in a sufficiently clear fashion so reviewers will have adequate material to make a complete review.

B. Informed Consent

Consent and/or assent forms, and any additional information to be given to a subject, should accompany the grant application. Information that is given to the subject or the subject's representative must be in language that the subject or his or her representative can understand. No informed consent, whether oral or written, may include any language through which the subject or the subject's representative is made to waive any of the subject's legal rights, or by which the subject or representative releases or appears to release the investigator, the sponsor, or the institution or its agent from liability.

If a study involves both adults and children, separate consent forms should be provided for the adults and the parents or guardians of the children.

C. Elements of Informed Consent

The elements of informed consent are stated in the regulations at 45 CFR 46.116 and 21 CFR 50.25 as follows:

1. Basic Elements of Informed Consent

In seeking informed consent, the following information shall be provided to each subject:

(a) A statement that the study involves research, an explanation of the purposes of the research and the expected duration of the subject's participation, a description of the procedures to be followed, and identification of any procedures which are experimental.

(b) A description of any reasonably foreseeable risks or discomforts to the subject.

(c) A description of any benefits to the subject or to others which may reasonably be expected from the research.

(d) A disclosure of appropriate alternative procedures or courses of treatment, if any, that might be advantageous to the subject.

(e) A statement that describes the extent, if any, to which confidentiality of records identifying the subject will be maintained, and that notes the possibility that FDA may inspect the records.

(f) For research involving more than minimal risk, an explanation as to whether any compensation and any medical treatments are available if injury occurs and, if so, what they consist of or where further information may be obtained.

(g) An explanation of whom to contact for answers to pertinent questions about the research and research subject's rights, and whom to contact in the event of research-related injury to the subject.

(h) A statement that participation is voluntary, that refusal to participate will involve no penalty or loss of benefits to which the subject is otherwise entitled, and that the subject may discontinue participation at any time without penalty or loss of benefits to which the subject is otherwise entitled.

2. Additional Elements of Informed Consent

When appropriate, one or more of the following elements of information shall also be provided to each subject:

(a) A statement that the particular treatment or procedure may involve risks to the subject (or the embryo or fetus, if the subject is or may become pregnant) which are currently unforeseeable.

(b) Anticipated circumstances under which the subject's participation may be terminated by the investigator without regard to the subject's consent.

(c) Any costs to the subject that may result from participation in the research.

(d) The consequences of a subject's decision to withdraw from the research and procedures for orderly termination of participation by the subject.

(e) A statement that significant new findings developed during the course of the research which may relate to the subject's willingness to continue participation will be provided to the subject.

(f) The approximate number of subjects involved in the study.

The informed consent requirements are not intended to preempt any applicable Federal, State, or local laws which require additional information to be disclosed for informed consent to be legally effective.

Nothing in the notice is intended to limit the authority of a physician to provide emergency medical care to the extent that a physician is permitted to do so under applicable Federal, State, or local law.

III. Reporting Requirements

An annual Financial Status Report (FSR) (SF–269) is required. The original and two copies of this report must be submitted to FDA's Grants Management Officer within 90 days of the budget expiration date of the grant. Failure to file the FSR in a timely fashion will be

grounds for suspension or termination of the grant.

For continuing grants, an annual program progress report is also required. The noncompeting continuation application (PHS 2590) will be considered the annual program progress report.

Additionally, all new and continuing grants must comply with all regulatory requirements necessary to maintain active status of their IND/IDE. This includes, but is not limited to, submission of an annual report to the appropriate regulatory review division within the FDA. Failure to meet regulatory requirements will be grounds for suspension or termination of the grant.

Program monitoring of grantees will be conducted on an ongoing basis and written reports will be prepared by the project officer. The monitoring may be in the form of telephone conversations between the project officer/grants management specialist and the principal investigator. Periodic site visits with appropriate officials of the grantee organization may also be conducted. The results of these reports will be recorded in the official grant file and may be available to the grantee upon request consistent with FDA disclosure regulations. Additionally, the grantee organization will be required to comply with all special terms and conditions which state that future funding of the study will be contingent on recommendations from the OPD Project Officer verifying that: (1) There has been adequate progress toward enrollment, based on specific circumstances of the study; (2) there is an adequate supply of the product/device; and (3) there is continued compliance with all FDA regulatory requirements for the trial (e.g., annual report to IND/IDE file, communication of all protocol changes to the appropriate FDA Center, etc.).

A final program progress report, FSR, and Invention Statement must be submitted within 90 days after the expiration of the project period as noted on the Notice of Grant Award.

IV. Mechanism of Support

A. Award Instrument

Support will be in the form of a grant. All awards will be subject to all policies and requirements that govern the research grant programs of PHS, including the provisions of 42 CFR part 52 and 45 CFR parts 74 and 92. The regulations issued under Executive Order 12372 do not apply to this program.

All grant awards are subject to applicable requirements for clinical investigations imposed by sections 505, 507, 512, and 515 of the act (21 U.S.C. 355, 357, 360b, and 360e), section 351 of the PHS act (42 U.S.C. 262), and regulations issued under any of these sections.

B. Eligibility

These grants are available to any public or private nonprofit entity (including State and local units of government) and any for-profit entity. For-profit entities must commit to excluding fees or profit in their request for support to receive grant awards. Organizations described in section 501(c)(4) of the Internal Revenue Code of 1968 that engage in lobbying are not eligible to receive grant awards.

C. Length of Support

The length of the study will depend upon the nature of the study. For those studies with an expected duration of more than 1 year, a second or third year of noncompetitive continuation of support will depend on: (1) Performance during the preceding year; (2) the availability of Federal funds; and, (3) compliance with regulatory requirements of the IND/IDE.

D. Funding Plan

The number of studies funded will depend on the quality of the applications received and the availability of Federal funds to support the projects. Before an award will be made, OPD will verify the active status of the IND/IDE for the proposed study. If the IND/IDE for the proposed study is not active or if an annual report has not been submitted to the IND file in the last 12 months, no award will be made. Further, documentation of IRB approvals for all performance sites must be on file with the Grants Management Officer, FDA (address above), before an award can be made.

V. Review Procedure and Criteria

A. Review Method

All applications submitted in response to this request for applications (RFA) will first be reviewed by grants management and program staff for responsiveness to this RFA. If applications are found to be nonresponsive, they will be returned to the applicant without further consideration.

Responsive applications will be reviewed and evaluated for scientific and technical merit by an ad hoc panel of experts in the subject field of the specific application. Responsive applications will also be subject to a second level of review by a National Advisory Council for concurrence with the recommendations made by the first-level reviewers, and funding decisions will be made by the Commissioner of Food and Drugs.

B. Program Review Criteria

Applications will be evaluated by program and grants management staff for responsiveness. Applications considered nonresponsive will be returned to the applicant, without being reviewed. Applicants are strongly encouraged to contact the FDA to resolve any questions regarding criteria prior to the submission of their application. All questions of a technical or scientific nature must be directed to the OPD program staff and all questions of an administrative or financial nature must be directed to the grants management staff. (See the ''**For Further Information Contact**'' section at the beginning of this document.) Responsiveness will be based on the following criteria:

(1) The application must propose a clinical trial intended to provide safety and/or efficacy data of one therapy for one orphan indication. Additionally, there must be an explanation in the ''Background and Significance'' section of how the proposed study will either facilitate product approval or provide essential data needed for product development.

(2) The prevalence, not incidence, of population to be served by the product must be fewer than 200,000 individuals in the United States. The applicant should include, in the ''Background and Significance'' section, a detailed explanation supplemented by authoritative references in support of the prevalence figure. If the product has been designated by FDA as an orphan product for the proposed indication, a statement of that fact will suffice. Diagnostic tests and vaccines will qualify only if the population of intended use is fewer than 200,000 individuals in the United States per annum.

(3) The number assigned to the IND/IDE for the proposed study should appear on the face page of the application with the title of the project. Only medical foods that do not require premarket approval are exempt from this requirement. The IND/IDE must be in active status and in compliance with all regulatory requirements of the FDA at the time of submission of the application. In order to meet this requirement, the original IND/IDE application, pertinent amendments, and the protocol for the proposed study must have been received by the appropriate FDA reviewing division a minimum of 30 days prior to the due

date of the grant application. Studies of already approved products, evaluating new orphan indications, must also have an active IND. Exempt IND's must have their status changed to active to be eligible for this program. If the sponsor of the IND/IDE is other than the principal investigator listed on the application, a letter from the sponsor verifying access to the IND/IDE is required, and both the application's principal investigator and the study protocol must have been submitted to the IND/IDE.

(4) The requested budget should be within the limits (either $100,000 in direct costs for each year for up to 3 years for any phase study, or $200,000 in direct costs for each year for up to 3 years for phase 2 or 3 studies) as stated in this request for applications.

(5) Consent and/or assent forms, and any additional information to be given to a subject, should be included in the grant application.

(6) All applicants should follow guidelines specified in the PHS 398 Grant Application kit.

C. Scientific/Technical Review Criteria

The ad hoc expert panel will provide the first level of review. The application will be judged on the following scientific and technical merit criteria:

(1) The soundness of the rationale for the proposed study;

(2) The quality and appropriateness of the study design to include the rationale for the statistical procedures;

(3) The statistical justification for the number of patients chosen for the trial, based on the proposed outcome measures and the appropriateness of the statistical procedures to be used in analysis of the results;

(4) The adequacy of the evidence that the proposed number of eligible subjects can be recruited in the requested timeframe;

(5) The qualifications of the investigator and support staff, and the resources available to them;

(6) The evidence that a sufficient quantity of the product is available to the applicant in the form needed for the investigation. A current letter from the supplier as an appendix will be acceptable;

(7) The adequacy of the justification for the request for financial support;

(8) The adequacy of plans for complying with regulations for protection of human subjects; and

(9) The ability of the applicant to complete the proposed study within its budget and within time limitations stated in this RFA.

The priority score will be based on the scientific/technical review criteria in section V.C of this document. In addition, the reviewers may advise the program staff concerning the appropriateness of the proposal to the goals of the OPD Grant Program described in section I of this document ''Program Research Goals.''

D. Award Criteria

Resources for this program are limited. Therefore, should two or more applications be received and approved by FDA which propose duplicative or very similar studies, FDA will support only the study with the best score.

VI. Submission Requirements

The original and five copies of the completed Grant Application Form PHS 398 (Rev. 5/95) or the original and two copies of the PHS 5161 (Rev. 7/92) for State and local governments, with copies of the appendices for each of the copies, should be delivered to Robert L. Robins (address above). State and local governments may choose to use the PHS 398 application form in lieu of the PHS 5161. Application receipt dates are October 15, 1997, and March 15, 1998. If the receipt date falls on a weekend, it will be extended to Monday; if the date falls on a holiday, it will be extended to the following work day. No supplemental or addendum material will be accepted after the receipt date. Evidence of final IRB approval will be accepted for the file after the receipt date.

The outside of the mailing package and item 2 of the application face page should be labeled, ''Response to RFA FDA OP–98–1''.

If an application for the same study was submitted in response to the previous RFA, a submission in response to this RFA will be considered a request to withdraw the previous application. Applications originally submitted for the October closing date will also be administratively withdrawn, if resubmitted the following March. Resubmissions are treated as new applications; therefore, the applicant may wish to address the issues presented in the previous summary statements.

VII. Method of Application

A. Submission Instructions

Applications will be accepted during normal working hours, 8 a.m. to 4:30 p.m., Monday through Friday, on or before the established receipt dates.

Applications will be considered received on time if sent or mailed on or before the receipt dates as evidenced by a legible U.S. Postal Service dated postmark or a legible date receipt from a commercial carrier, unless they arrive too late for orderly processing. Private metered postmarks shall not be acceptable as proof of timely mailing. Applications not received on time will not be considered for review and will be returned to the applicant. (Applicants should note that the U.S. Postal Service does not uniformly provide dated postmarks. Before relying on this method, applicants should check with their local post office.)

Do not send applications to the Division of Research Grants, National Institutes of Health (NIH). Any application that is sent to the NIH, that is then forwarded to the FDA and received after the applicable due date, will be deemed unresponsive and returned to the applicant. Instructions for completing the application forms can be found on the NIH home page on the Internet (address http://www.nih.gov/grants/phs398/phs398.html; the forms can be found at http://www.nih.gov/grants/phs398/forms—toc.html). However, as noted above, applications are not to be mailed to the NIH. Applicants are advised that the FDA does not adhere to the page limitations or the type size and line spacing requirements imposed by the NIH on its applications). Applications must be submitted via mail delivery as stated above. FDA is unable to receive applications via the Internet.

B. Format for Application

Submission of the application must be on Grant Application Form PHS 398 (Rev. 5/95). All ''General Instructions'' and ''Specific Instructions'' in the application kit should be followed with the exception of the receipt dates and the mailing label address. Do not send applications to the Division of Research Grants, NIH. Applications from State and Local Governments may be submitted on Form PHS 5161 (Rev. 7/92) or Form PHS 398 (Rev. 5/95).

The face page of the application should reflect the request for applications number RFA-FDA-OP–98–1. The title of the proposed study should include the name of the product and the disease/disorder to be studied along with the IND/IDE number.

Data included in the application, if restricted with the legend specified below, may be entitled to confidential treatment as trade secret or confidential commercial information within the meaning of the Freedom of Information Act (5 U.S.C. 552(b)(4)) and FDA's implementing regulations (21 CFR 20.61).

Information collection requirements requested on Form PHS 398 and the instructions have been submitted by the

PHS to the Office of Management and Budget (OMB) and were approved and assigned OMB control number 0925–0001.

C. Legend

Unless disclosure is required by the Freedom of Information Act as amended (5 U.S.C. 552) as determined by the freedom of information officials of the Department of Health and Human Services or by a court, data contained in the portions of this application which have been specifically identified by page number, paragraph, etc., by the applicant as containing restricted information shall not be used or disclosed except for evaluation purposes.

Dated: June 30, 1997.

William K. Hubbard,

Associate Commissioner for Policy Coordination.

[FR Doc. 97–17799 Filed 7–8–97; 8:45 am]

BILLING CODE 4160–01–P

DEPARTMENT OF HEALTH AND HUMAN SERVICES

Food and Drug Administration

[Docket No. 97D–0267]

Guidance for Industry on Expiration Dating and Stability Testing of Solid Oral Dosage Form Drugs Containing Iron; Availability

AGENCY: Food and Drug Administration, HHS.

ACTION: Notice.

SUMMARY: The Food and Drug Administration (FDA) is announcing the availability of a guidance document entitled ''Guidance for Industry: Expiration Dating and Stability Testing of Solid Oral Dosage Form Drugs Containing Iron.'' The guidance document provides information to manufacturers of iron-containing drug products who are affected by a final rule that requires label warning statements and unit-dose packaging for solid oral drug products that contain 30 milligrams (mg) or more of iron per dosage unit. The guidance document describes the circumstances under which the agency does not intend to object, for a limited period of time, to modified expiration dating by drug manufacturers and packagers who are required to package their products into unit-dose containers under the final rule.

DATES: Written comments may be submitted at any time. The agency does not expect to be guided by the recommendations in this guidance document after July 15, 1999.

ADDRESSES: Submit written requests for single copies of ''Guidance for Industry: Expiration Dating and Stability Testing of Solid Oral Dosage Form Drugs Containing Iron'' to the Drug Information Branch (HFD–210), Center for Drug Evaluation and Research, Food and Drug Administration, 5600 Fishers Lane, Rockville, MD 20857. Send one self-addressed adhesive label to assist that office in processing your requests.

FOR FURTHER INFORMATION CONTACT: Barry Rothman, Center for Drug Evaluation and Research (HFD–325), Food and Drug Administration, 7520 Standish Pl., Rockville, MD 20855, 301–594–0098.

SUPPLEMENTARY INFORMATION: FDA is announcing the availability of a guidance document entitled ''Guidance for Industry: Expiration Dating and Stability Testing of Solid Oral Dosage Form Drugs Containing Iron.'' The purpose of this guidance document is to describe an approach to stability testing and expiration dating for a limited class of iron-containing products for certain manufacturers and packagers of drug products containing iron. In the **Federal Register** of January 15, 1997 (62 FR 2218), FDA issued a final rule entitled ''Iron-Containing Supplements and Drugs: Label Warning Statements and Unit-Dose Packaging Requirements'' (hereinafter called the iron regulations). The iron regulations, effective July 15, 1997, require label warning statements and unit-dose packaging for solid oral drug products that contain 30 mg or more of iron per dosage unit.

FDA requires that drug products bear an expiration date determined by appropriate stability testing §§ 211.137 and 211.166 (21 CFR 211.137 and 211.166). Drug product stability needs to be evaluated over time in the same container-closure system that will be used in the marketing of the product, and accelerated stability studies can be used to support tentative expiration dates in the event that full shelf life studies are not available. When a firm changes the packaging of a drug product, stability testing must be performed on the product in its new packaging, and expiration dating must reflect the results of the new stability testing.

To meet the requirements of the iron regulations, all manufacturers of solid oral drug products that contain 30 mg or more of iron per dosage unit must package their products in unit-dose packaging. As a result, these manufacturers must determine an appropriate expiration date for that packaging. Because the final iron regulations were published only 6 months before they were to take effect, accelerated stability testing may be necessary to justify an expiration date of more than 6 months. However, accelerated stability studies are impractical for some drug products containing iron, especially multivitamin products, because such products often do not perform well under the artificially stressful conditions of accelerated studies. For these drug products, real-time stability testing may be the only method to determine an appropriate expiration date. To minimize the burden faced by those manufacturers and packagers who have made good faith efforts to comply with the stability testing requirements but were unable to do so, FDA advises that, for a limited period of time, it does not intend to object if such a firm fails to comply with §§ 211.137 and 211.166, so long as it establishes expiration dates and stability testing protocols under the specific approach described in the guidance document. FDA expects that sufficient stability testing will be performed in a timely fashion; therefore, the agency does not expect to be guided by the recommendations in this guidance document after July 15, 1999.

This guidance document represents the agency's current thinking on expiration dating for solid oral drug products containing 30 mg or more of iron. It does not create or confer any rights for or on any person and does not operate to bind FDA or the public. An alternative approach may be used if such approach satisfies the requirement of the applicable statute, regulations, or both.

Interested persons may, at any time, submit written comments on the guidance to the Dockets Management Branch (HFA–305), Food and Drug Administration, 12420 Parklawn Dr., rm. 1–23, Rockville, MD 20857. Two copies of any comments are to be submitted, except that individuals may submit one copy. Requests and comments are to be identified with the docket number found in brackets in the heading of this document. The guidance and received comments may be seen in the office above between 9 a.m. and 4 p.m., Monday through Friday.

An electronic version of this guidance is also available on the Internet using the World Wide Web at http://www.fda.gov/cder/guidance.htm.

Dated: June 30, 1997.

William K. Hubbard,

Associate Commissioner for Policy Coordination.

[FR Doc. 97–17796 Filed 7–8–97; 8:45 am]

BILLING CODE 4160–01–F

DEPARTMENT OF HEALTH AND HUMAN SERVICES

Food and Drug Administration

Folate Intake; Dissemination of Public Health Message; Notice of Meeting

AGENCY: Food and Drug Administration, HHS.

ACTION: Notice of meeting.

SUMMARY: The Food and Drug Administration (FDA) is announcing a meeting to be held in collaboration with the Centers for Disease Control and Prevention and the March of Dimes Birth Defects Foundation. The topic of this meeting concerns the importance of adequate folate intake among women of child-bearing age in reducing the risk of certain birth defects. The agencies involved in the meeting will present relevant background information and information about possible approaches to disseminating information on adequate folate intake.

DATES: The meeting will be held on Wednesday, August 6, 1997, from 10 a.m. to 12 p.m. Registration for this meeting must be received by July 30, 1997.

ADDRESSES: The meeting will be held at the Hubert H. Humphrey Bldg., 1st Floor Auditorium, 200 Independence Ave. SW., Washington, DC 20201.

FOR FURTHER INFORMATION CONTACT: Jeanne E. Latham, Center for Food Safety and Applied Nutrition (HFS–456), Food and Drug Administration, Federal Bldg. 8, 200 C St. SW., rm. 4129 B, Washington, DC 20204, 202–205–4697, FAX 202–260–8957.

SUPPLEMENTARY INFORMATION: The purpose of this meeting is to encourage and to provide guidance to attendees, including manufacturers and marketers of women's products and others, who may wish to assist in the dissemination of a public health message about adequate folate intake. To register for the meeting, please call or fax the contact person (address above). Include the name, title, telephone, and fax number of the person attending and the name of the organization being represented.

If special accommodations are required due to a disability, please contact Jeanne Latham at least 7 days before the meeting.

Dated: June 30, 1997.

William K. Hubbard,

Associate Commissioner for Policy Coordination.

[FR Doc. 97–17798 Filed 7–8–97; 8:45 am]

BILLING CODE 4160–01–P

DEPARTMENT OF HEALTH AND HUMAN SERVICES

Health Resources and Services Administration

Availability of Funds for the Nursing Education Loan Repayment Program for Service in Certain Health Facilities

AGENCY: Health Resources and Services Administration, HHS.

ACTION: Notice of available funds.

SUMMARY: The Health Resources and Services Administration (HRSA) announces that applications will be accepted for fiscal year (FY) 1997 for awards under section 846 of the Public Health Service (PHS) Act to repay up to 85 percent of the nursing education loans of registered nurses who agree to serve for not less than 2 years as nurse employees in certain health facilities.

The HRSA, through this notice, invites applications for participation in this loan repayment program. Approximately $2,197,000 will be available, and with these funds, the HRSA estimates that approximately 195 loan repayment awards may be made.

The PHS is committed to achieving the health promotion and disease prevention objectives of *Healthy People 2000*, a PHS-led national activity for setting health priorities. These programs will contribute to the *Healthy People 2000* objectives by improving access to primary health care services through coordinated systems of care for medically underserved populations in both rural and urban areas. Potential applicants may obtain a copy of *Healthy People 2000* (Full Report, Stock No. 017–001–00474–01) or *Healthy People 2000* (Summary Report, Stock No. 017–001–00473–01) through the Superintendent of Documents, Government Printing Office, Washington, D.C. 20402–9325 (telephone number: 202–783–3238).

The PHS strongly encourages all grant and contract recipients to provide a smoke-free workplace and promote the non-use of all tobacco products. In addition, Public Law 103–227, the Pro-Children Act of 1994, prohibits smoking in certain facilities (or in some cases, any portion of a facility) in which regular or routine education, library, day care, health care, or early childhood development services are provided to children. This is consistent with the PHS mission to protect and advance the physical and mental health of the American people.

DATES: To receive consideration for funding, individuals must submit their applications by August 31, 1997. Applications shall be considered as meeting the deadline if they are either:

(1) received on or before the deadline date; or

(2) sent on or before the deadline and received in time for submission to the reviewing program official.

(Applicants should request a legibly dated U.S. Postal Service postmark or obtain a legibly dated receipt from a commercial carrier or U.S. Postal Service. Private metered postmarks shall not be acceptable as proof of timely mailing.)

Late applications will not be considered for funding in FY 1997, but may be kept on file for consideration in FY 1998.

ADDRESSES: Application materials with a list of counties (parishes) with the greatest shortage of nurses may be obtained by calling or writing to: Sharley Chen, Chief, Loan Repayment Programs Branch, Division of Scholarships and Loan Repayments, Bureau of Primary Health Care, HRSA, 4350 East-West Highway, 10th Floor, Bethesda, MD 20814, (301–594–4400). The 24-hour toll-free phone number is 1–800–435–6464 and the FAX number is (301) 594–4981. Completed applications should be mailed to the same address. The application form has been approved under Office of Management and Budget (OMB) Number 0915–0140.

FOR FURTHER INFORMATION CONTACT: For further program information and technical assistance, please contact the Branch Chief at the above address, phone or FAX number.

SUPPLEMENTARY INFORMATION: Section 846 of the PHS Act provides that the Secretary will repay a portion of an individual's educational loans incurred for nursing education costs if that individual enters into a contract with the Secretary to serve as a registered nurse for not less than 2 years in a variety of eligible health facilities or in a health facility determined by the Secretary to have a critical shortage of nurses. Due to funding limitations, the total outstanding educational loan balances eligible for loan repayment assistance will not exceed $30,000.00. For an individual who is selected to participate in this program, repayment shall be on the following basis:

(1) By the completion of the first year of agreed service, the Secretary will

have paid 30 percent of the principal of, and interest on, the outstanding balance on each qualified loan as of the beginning date of service (not to exceed 30% of a total of $30,000);

(2) By the completion of the second year of agreed service, the Secretary will have paid another 30 percent of the principal of, and interest on, the outstanding balance of each qualified loan as of the beginning date of service (not to exceed 30% of a total of $30,000); and

(3) By the completion of a third year of agreed service, if applicable, the Secretary will have paid another 25 percent of the principal of, and interest on, the outstanding balance of each qualified loan as of the beginning date of service (not to exceed 25% of a total of $30,000). The option for third year of service is dependent on the availability of funds during that third year.

No more than 85 percent of the principal balance of any qualified loan which was unpaid as of the beginning date of service will be paid under this program.

Prior to entering a contract for repayment of loans, other than Nursing Student Loans, the Secretary will require that satisfactory evidence be provided of the existence and reasonableness of the educational loans.

These loan repayment amounts are unrelated to any salary paid to the nursing education loan repayment recipient by the health facility by which he or she has been employed.

To be eligible to participate in this program, an individual must:

(1) Have received, prior to the start of service, a baccalaureate or associate degree in nursing, a diploma in nursing, or a graduate degree in nursing;

(2) Have outstanding educational loans for the costs of his/her nursing education;

(3) Agree to be employed full-time for not less than 2 years in any of the following types of eligible health facilities: (a) Indian Health Service health center; a Native Hawaiian health center; a public hospital (operated by a State, county, or local government); a health center funded under section 330 of the PHS Act (including migrant, homeless and public housing health centers); a rural health clinic (section 1861 (aa)(2) of the Social Security Act); or (b) public or nonprofit private health facility determined by the Secretary to have a critical shortage of nurses; and

(4) Currently be employed or plan to begin employment as a registered nurse no later than August 31, 1997.

Funding Preferences

Awards will be made the first week of May, July, and September of the fiscal year beginning October 1, 1997. As required under section 846, the Secretary will give first preference to qualified applicants:

(1) Who have the greatest financial need; and

(2) Who agree to serve in the types of health facilities described in paragraph 3 (a) and (b) above, that are located in geographic areas determined by the Secretary to have a shortage of and need for nurses.

The Secretary will give second preference to qualified applicants who agree to be employed by an eligible health facility described in paragraph 3 (a) above. If funds remain available after initial awards are made, further consideration will be given to applicants who meet eligibility requirements but do not meet the above funding preferences.

Breach of Contract

Participants in this program who fail to provide health services for the period specified in their contract with the Secretary shall be liable to the Federal Government for payments made by the Secretary during the service period pursuant to such contract, plus interest on this amount at the maximum legal prevailing rate, payable within 3 years from the date the contract with the Secretary is breached.

Waiver or Suspension of Liability

A waiver or suspension of liability may be granted by the Secretary if compliance with the contract with the Secretary by the individual participant is impossible, or would involve extreme hardship to the individual, and if enforcement of the contract with respect to the individual would be unconscionable.

Other Award Information

This program is not subject to the provisions of Executive Order 12372, Intergovernmental Review of Federal Programs, since payments to individuals are not covered. In addition, this program is not subject to the submission of a Public Health System Impact Statement.

(The OMB Catalog of Federal Domestic Assistance number for this program is 93.908)

Dated: July 2, 1997.

Claude Earl Fox,

Acting Administrator.

[FR Doc. 97–17895 Filed 7–8–97; 8:45 am]

BILLING CODE 4160–15–M

DEPARTMENT OF HEALTH AND HUMAN SERVICES

Substance Abuse and Mental Health Services Administration (SAMHSA); Notice of Meeting

Pursuant to Public Law 92–463, notice is hereby given of the teleconference meeting of the Substance Abuse and Mental Health Services Administration (SAMHSA) National Advisory Council in July 1997.

This is a continuation of the June 23 teleconference meeting (originally published June 10, 1997, Volume 62, Number 111, Page 31617). The meeting will include the review, discussion and evaluation of individual contract proposals. Therefore, the meeting will be closed to the public as determined by the Administrator, SAMHSA, in accordance with Title 5 U.S.C. 552b(c) (3), (4), and (6) and 5 U.S.C. App. 2, § 10(d).

A summary of the meeting and a roster of Council members may be obtained from: Ms. Susan E. Day, Program Assistant, SAMHSA National Advisory Council, 5600 Fishers Lane, Room 12C–15, Rockville, Maryland 20857. Telephone: (301) 443–4640.

Substantive program information may be obtained from the contact whose name and telephone number is listed below.

Committee Name: SAMHSA National Advisory Council.

Meeting Date: July 10, 1997.

Place: Substance Abuse and Mental Health Services Administration, Parklawn Building, Conference Room 12–94, 5600 Fishers Lane, Rockville, Maryland 20857.

Closed: July 10, 1997, 2:00 p.m. to 3:00 p.m.

Contact: Toian Vaughn, Executive Secretary, Room 12C–15, Parklawn Building, Telephone: (301) 443–4640 and FAX: (301) 443–1450.

This notice is being published less than 15 days prior to the meeting due to the urgent need to meet timing limitations imposed by the review and funding cycle.

Dated: July 2, 1997.

Jeri Lipov,

Committee Management Officer, Substance Abuse and Mental Health Services Administration.

[FR Doc. 97–17896 Filed 7–8–97; 8:45 am]

BILLING CODE 4162–20–U

DEPARTMENT OF HEALTH AND HUMAN SERVICES

Substance Abuse and Mental Health Services Administration (SAMHSA); Notice of Meeting

Pursuant to Public Law 92–463, notice is hereby given of the following meeting of the SAMHSA Special Emphasis Panel II in July.

A summary of the meeting may be obtained from: Ms. Dee Herman, Committee Management Liaison, SAMHSA Office of Extramural Activities Review, 5600 Fishers Lane, Room 17–89, Rockville, Maryland 20857. Telephone: 301–443–7390.

Substantive program information may be obtained from the individual named as Contact for the meeting listed below.

The meeting will include the review, discussion and evaluation of individual contract proposals. This discussion could reveal personal information concerning individuals associated with the proposals and confidential and financial information about an individual's proposal. This discussion may also reveal information about procurement activities exempt from disclosure by statute and trade secrets and commercial or financial information obtained from a person and privileged and confidential. Accordingly, the meeting is concerned with matters exempt from mandatory disclosure in Title 5 U.S.C. 552b(c)(3), (4), and (6) and 5 U.S.C. App. 2, § 10(d).

Committee Name: SAMHSA Special Emphasis Panel II (SEP II).

Meeting Dates: July 21–22, 1997.

Place: Willard Intercontinental Hotel, Douglas Room, 1401 Pennsylvania Avenue, NW, Washington, DC 20004–1010.

Closed: July 21, 1997, 9:00 a.m.–5:00 p.m.

July 22, 1997, 9:00 a.m.–adjournment.

Contact: Constance M. Burtoff, Room 17–89, Parklawn Building, Telephone: 301–443–2437 and FAX: 301–443–3437.

Dated: July 2, 1997.

Jeri Lipov,

Committee Management Officer, Substance Abuse and Mental Health Services Administration.

[FR Doc. 97–17898 Filed 7–8–97; 8:45 am]

BILLING CODE 4162–20–U

DEPARTMENT OF HOUSING AND URBAN DEVELOPMENT

[Docket No. FR–4200–N–83]

Notice of Proposed Information; Collection for Public Comments

AGENCY: Office of the Assistant Secretary for Public and Indian Housing, HUD.

ACTION: Notice.

SUMMARY: The proposed information collection requirement described below will be submitted to the Office of Management and Budget (OMB) for review, as required by the Paperwork Reduction Act. The Department is soliciting public comments on the subject proposal.

DATES: Comments due: September 8, 1997.

ADDRESSES: Interested persons are invited to submit comments regarding this proposal. Comments should refer to the proposal by name and/or OMB Control number and should be sent to: Mildred M. Hamman, Reports Liaison Officer, Public and Indian Housing, Department of Housing and Urban Development, 451 7th Street, SW., Room 4238, Washington, DC 20410–5000.

FOR FURTHER INFORMATION CONTACT: Mildred M. Hamman, (202) 708–3642, extension 4128, for copies of the proposed forms and other available documents. (This is not a toll-free number).

SUPPLEMENTARY INFORMATION: The Department will submit the proposed information collection to OMB for review, as required by the Paperwork Reduction Act of 1995 (44 U.S.C. Chapter 35, as amended).

This Notice is soliciting comments from members of the public and affected agencies concerning the proposed collection of information to: (1) Evaluate whether the proposed collection of information is necessary for the proper performance of the functions of the agency, including whether the information will have practical utility; (2) evaluate the accuracy of the agency's estimate of the burden of the proposed collection of information; (3) enhance the quality, utility, and clarity of the information to be collected; and (4) minimize the burden of the collection of information on those who are to respond, including through the use of appropriate automated collection techniques or other forms of information technology; e.g., permitting electronic submission of responses.

This Notice also lists the following information:

Title of Proposal: Section 5(h) Homeownership Program for Public and Indian Housing: Submission of plan, reporting.

OMB Control Number: 2577–0201.

Description of the need for the information and proposed use: Housing Agencies (HAs) to participate in this Program will submit plans to HUD to sell public and Indian housing to residents of the housing. The homeownership plans must meet criteria established in HUD regulations and residents must be involved in plan development. HUD will review and approve or disapprove the plan and notify HAs of their action. For HUD-approved plans, HAs will maintain records which may be subject to audit by HUD and the Government Accounting Office (GAO). In cases where implementation of the plan takes more than one year, HAs will prepare annual reports and submit them to HUD.

Members of affected public: State or local Government; individuals or households.

Estimation of the total number of hours needed to prepare the information collection including number of respondents, frequency of response, and hours of response: 50 respondents; annual reporting; 76 average hours per response, 3,800 total reporting burden hours.

Status of the proposed information collection: Reinstatement, without change, of a previously approved collection for which approval has expired.

Authority: Section 3506 of the Paperwork Reduction Act of 1995, 44 U.S.C. Chapter 35, as amended.

Dated: July 2, 1997.

Kevin Emanuel Marchman,

Acting Assistant Secretary for Public and Indian Housing.

[FR Doc. 97–17929 Filed 7–8–97; 8:45 am]

BILLING CODE 4210–33–M

DEPARTMENT OF HOUSING AND URBAN DEVELOPMENT

[Docket No. FR–4200–N–84]

Notice of Proposed Information Collection for Public Comment

AGENCY: Office of the Assistant Secretary for Housing, HUD.

ACTION: Notice.

SUMMARY: The proposed information collection requirement described below will be submitted to the Office of Management and Budget (OMB) for review, as required by the Paperwork

Reduction Act. The Department is soliciting public comments on the subject proposal.

DATES: *Comments due:* September 8, 1997.

ADDRESSES: Interested persons are invited to submit comments regarding this proposal. Comments should refer to the proposal by name and/or OMB Control Number and should be sent to: Oliver Walker, Housing, Department of Housing & Urban Development, 451—7th Street, SW., Room 9116, Washington, DC 20410.

FOR FURTHER INFORMATION CONTACT: Jane Curtis, telephone number (202) 708–0624 (this is not a toll-free number) for copies of the proposed forms and other available documents.

SUPPLEMENTARY INFORMATION: The Department will submit the proposed information collection to OMB for review, as required by the Paperwork Reduction Act of 1995 (44 U.S.C. Chapter 35, as amended).

The Notice is soliciting comments from members of the public and affecting agencies concerning the proposed collection of information to: (1) Evaluate whether the proposed collection of information is necessary for the proper performance of the functions of the agency, including whether the information will have practical utility; (2) Evaluate the accuracy of the agency's estimate of the burden of the proposed collection of information; (3) Enhance the quality, utility, and clarity of the information to be collected; and (4) Minimize the burden of the collection of information on those who are to respond; including through the use of appropriate automated collection techniques or other forms of information technology, e.g., permitting electronic submission of responses.

This Notice also lists the following information:

Title of Proposal:

OMB Control Number: 2502–0112.

Description of the need for the information and proposed use: Portions of Section 227 of the National Housing Act requires the certification of costs upon completion of improvements and prior to final endorsement of the mortgage. This information collection on HUD–92330 is used to obtain data for the mortgagor relative to the actual cost of the project. The actual data is reviewed by HUD staff to determine that the mortgagor's originally endorsement mortgage is supported by the applicable percentage of approved costs.

Agency forms, if applicable: HUD–92330.

Members of affected public: mortgagors.

Status of the proposed information collection: reinstatement.

Authority: Section 236 of the Paperwork Reduction Act of 1995, 44 U.S.C. Chapter 35, as amended.

Dated: June 30, 1997.

Stephanie A. Smith,

General Deputy Assistant Secretary for Housing-Federal Housing Commissioner.

[FR Doc. 97–17928 Filed 7–8–97; 8:45 am]

BILLING CODE 4210–27–M

DEPARTMENT OF THE INTERIOR

Office of the Secretary

Designation of the Sacramento-San Francisco Pony Express Route as a Component of the Pony Express National Historic Trail

AGENCY: Office of the Secretary, Interior.

ACTION: Notice.

SUMMARY: This notice announces the Secretary of the Interior's decision to include the Sacramento-San Francisco route of the Pony Express as part of the Pony Express National Historic Trail.

FOR FURTHER INFORMATION CONTACT: Jere Krakow, National Park Service, Trail Program Manager, Salt Lake City, Utah, telephone (801) 539–4094.

SUPPLEMENTARY INFORMATION: An amendment to the National Trails System Act in 1992 authorized the Secretary of the Interior to undertake a study of the land and water route used to carry mail from Sacramento to San Francisco, California, to determine the feasibility and suitability of designating that route as a component of the Pony Express National Historic Trail. Upon completion of the study, if the Secretary determines that the route is a feasible and suitable addition to the Pony Express National Historic Trail, he shall designate the route as a component of the Pony Express National Historic Trail. The National Park Service (NPS), on behalf of the Department of the Interior, has completed the study and determined that it is both suitable and feasible to add this trail section to the Pony Express National Historic Trail.

The designation of this portion of the trail will result in minimal Federal action. No Federal land acquisition is proposed, nor any development of facilities such as visitor or interpretive centers. Because most of the overland trail lies under highways or other developed areas, much of this section would function as an auto tour component of the National Historic Trail.

The NPS will offer technical assistance in the development of signage and interpretation media for the trail. The NPS will facilitate cooperative agreements with the many public agencies and private organizations currently involved in the protection and management of the trail and trail-related resources. These include the East Bay Regional Parks System, the Public Works Department and Historical Resources Commission of the city of Davis, California, the city of Sacramento, The Contra Costa County Historical Society, the National Pony Express Association, and the Pony Express National Trails Association. All actions involving the NPS will be preceded by cooperative agreements with the appropriate agencies and will be undertaken in compliance with the National Environmental Policy Act (NEPA), the National Historic Preservation Act (as amended), as well as State or local regulations.

Based on the findings and recommendations of the NPS, and in accordance with the authority granted me pursuant to Section 2 of Public Law 102–328 (August 3, 1992), I have determined that it is feasible and suitable to designate the above trail from Sacramento to San Francisco, California, as a component of the Pony Express National Historic Trail. Notice is hereby given that effective upon this date, the above described trail is approved as a component of the National Trails System.

Dated: June 30, 1997.

Bruce Babbitt,

Secretary of the Interior.

[FR Doc. 97–17905 Filed 7–8–97; 8:45 am]

BILLING CODE 4310–70–M

DEPARTMENT OF THE INTERIOR

Bureau of Indian Affairs

Information Collection Submitted to the Office of Management and Budget for Review Under the Paperwork Reduction Act

AGENCY: Bureau of Indian Affairs, Interior.

ACTION: Notice.

SUMMARY: This notice announces that the Bureau of Indian Affairs (BIA) has submitted the proposed renewal of the collection of information for Water Requests to the Office of Management and Budget (OMB) for approval under the provisions of the Paperwork Reduction Act (44 U.S.C. 3501 *et seq.*). On April 23, 1997, BIA published a notice in the **Federal Register** (62 FR

19778) requesting comments on this proposed collection. The comment period ended on June 23,1997. BIA received one comment from the public in response to the notice.

FOR FURTHER INFORMATION CONTACT: Copies of the proposed collection of information and related forms and explanatory materials may be obtained by contacting Ross Mooney, Bureau of Indian Affairs, Division of Water and Land, Mail Stop 4513–MIB, Washington, D.C. 20240, or at (202) 208–5480, or facsimile number (202) 219–1255, or E-mail at Ross__Mooney@IIAKTAO__MAIL.

DATES: OMB is required to respond to this request within 60 days of publication of this notice or before September 8, 1997 but may respond after 30 days. For maximum consideration, your comments should be submitted by August 8, 1997.

ADDRESSES: Your comments and suggestions on the requirements should be made directly to the Office of Management and Budget, Interior Department Desk Officer (1076–0141), Office of Information and Regulatory Affairs, Washington, DC 20503, (202) 395–7340. Please provide a copy of your comments to Ross Mooney, Bureau of Indian Affairs, Division of Water and Land, Mail Stop 4513–MIB, Washington, D.C. 20240, or at (202) 208–5480, or facsimile number (202) 219–1255, or E-mail at Ross__Mooney@IIAKTAO__MAIL.

SUPPLEMENTARY INFORMATION:

1. Abstract

The information collection from water users at BIA irrigation projects is needed to operate and maintain the projects and fulfill reporting requirements.

2. Request for Comments

We specifically request your comments in order to:

a. Evaluate whether the proposed collection of information is necessary for the proper performance of the functions of the bureau, including whether the information will have practical utility;

b. Evaluate the bureau's estimate of the burden of the proposed collection of information, including the validity of the methodology and assumptions used;

c. Enhance the quality, utility, and clarity of the information to be collected; and

d. Minimize the burden of the collection of information on those who are to respond.

3. Data

Title: Water Request.

OMB Control Number: 1076–0141.

Frequency of Collection: On Occasion.

Description of Respondents: BIA Irrigation Project Water Users.

Total Annual Responses: 51,500.

Total Annual Burden Hours: 4,292.

Dated: July 1, 1997.

Ada E. Deer,

Assistant Secretary—Indian Affairs.

[FR Doc. 97–17960 Filed 7–8–97; 8:45 am]

BILLING CODE 4310–02–P

DEPARTMENT OF THE INTERIOR

Bureau of Land Management

[NV–930–1430–00; N–59509, N–59510, N–59511, N–59512, N–59513, N–59515, N–59516]

Notice of Realty Action: Lease/Conveyance for Recreation and Public Purposes

AGENCY: Bureau of Land Management, Interior.

ACTION: Recreation and public purpose lease/conveyance.

SUMMARY: The following described public land in Las Vegas, Clark County, Nevada has been examined and found suitable for lease/conveyance for recreational or public purposes under the provisions of the Recreation and Public Purposes Act, as amended (43 U.S.C. 869 *et seq.*). The Clark County Fire Department proposes to use the parcels for fire stations.

Mount Diablo Meridian, Nevada

Serial Number N–59509

T. 21 S., R. 60 E.,
Sec. 35; NE¼NW¼NE¼NE¼
Containing 2.500 acre, more or less.

Serial Number N–59510

T. 22 S., R. 60 E.,
Sec. 16; NE¼NE¼NE¼SW¼
Containing 2.500 acres, more or less.

Serial Number N–59511

T. 22 S., R. 60 E.,
Sec. 16; SW¼SW¼NW¼NW¼
Containing 2.500 acres, more or less.

Serial Number N–59512

T. 21 S., R. 60 E.,
Sec. 17; NW¼SW¼SW¼SE¼
Containing 2.500 acres, more or less.

Serial Number N–59513

T. 21 S., R. 60 E.,
Sec. 32; NE¼NE¼NE¼SE¼
Containing 2.500 acres, more or less.

Serial Number N–59515

T. 22 S., R. 61 E.,
Sec. 20; NE¼NE¼NE¼SE¼
Containing 2.500 acres, more or less.

Serial Number N–59515

T. 23 S., R. 61 E.,
Sec. 5; NE¼SE¼SE¼SE¼
Containing 2.500 acres, more or less.

The land is not required for any federal purpose. The lease/conveyance is consistent with current Bureau planning for this area and would be in the public interest. The lease/patent, when issued, will be subject to the provisions of the Recreation and Public Purposes Act and applicable regulations of the Secretary of the Interior, and will contain the following reservations to the United States:

1. A right-of-way thereon for ditches or canals constructed by the authority of the United States, Act of August 30, 1890 (43 U.S.C. 945).

2. All minerals shall be reserved to the United States, together with the right to prospect for, mine and remove such deposits from the same under applicable law and such regulations as the Secretary of the Interior may prescribe, and will be subject to:

1. Easements in favor of Clark County in accordance with transportation plan for roads, public utilities and flood control purposes.

2. All valid and existing rights.

Detailed information concerning this action is available for review at the office of the Bureau of Land Management, Las Vegas District, 4765 W. Vegas Drive, Las Vegas, Nevada.

Upon publication of this notice in the **Federal Register**, the above described land will be segregated from all other forms of appropriation under the public land laws, including the general mining laws, except for lease/conveyance under the Recreation and Public Purposes Act, leasing under the mineral leasing laws and disposals under the mineral material disposal laws.

For a period of 45 days from the date of publication of this notice in the **Federal Register**, interested parties may submit comments regarding the proposed lease/conveyance for classification of the lands to the District Manager, Las Vegas Field Office, 4765 W. Vegas Drive, Las Vegas, Nevada 89109.

Classification Comments: Interested parties may submit comments involving the suitability of the lands for fire stations. Comments on the classification are restricted to whether the land is physically suited for the proposal, whether the use will maximize the future use or uses of the land, whether the use is consistent with local planning and zoning, or if the use is consistent with State and Federal programs.

Application Comments: Interested parties may submit comments regarding

the specific use proposed in the application and plan of development, whether the BLM followed proper administrative procedures in reaching the decision, or any other factor not directly related to the suitability of the lands for fire stations.

Any adverse comments will be reviewed by the State Director. In the absence of any adverse comments, the classification of the land described in this Notice will becomes effective 60 days from the date of publication in the **Federal Register**. The lands will not be offered for lease/conveyance until after the classification becomes effective.

Dated: June 23, 1997.

Michael F. Dwyer,

District Manager, Las Vegas, NV.

[FR Doc. 97–17815 Filed 7–8–97; 8:45 am]

BILLING CODE 4310–HC–M

DEPARTMENT OF THE INTERIOR

National Park Service

National Register of Historic Places; Notification of Pending Nominations

Nominations for the following properties being considered for listing in the National Register were received by the National Park Service before June 28, 1997. Pursuant to section 60.13 of 36 CFR Part 60 written comments concerning the significance of these properties under the National Register criteria for evaluation may be forwarded to the National Register, National Park Service, P.O. Box 37127, Washington, D.C. 20013–7127. Written comments should be submitted by July 24, 1997.

Carol D. Shull,

Keeper of the National Register.

CALIFORNIA

Kern County

Errea House, 311 S. Green St., Tehachapi, 97000809

Sacramento County

Judah, Theodore, School, 3919 McKinley Blvd., Sacramento, 97000810

CONNECTICUT

New Haven County

Lewis, Isaac C., Cottage, 255 Thimble Islands Rd., Branford, 97000811

GEORGIA

Chatham County

Savannah and Ogeechee Canal, Roughly along I–95, between the Savannah and Ogeechee Rs., Chatham, 97000814

Thomas Square Streetcar Historic District, Roughly bounded by Anderson Ln., 42nd St., Victory Dr., E. Broad St., and Martin Luther King, Jr. Blvd., Savannah, 97000813

Jasper County

Monticello Historic District, Roughly bounded by College, Eatonton, Forsyth, Hillsboro, and W. Washington Sts. and Funderburg, and Madison Drs., Monticello, 97000812

ILLINOIS

Boone County

Belvidere High School, Jct. of Pearl and First Sts., Belvidere, 97000815

McLean County

Normal Theater, 209 North St., Normal, 97000818

Mercer County

Mercer County Jail, 309 S. College Ave., Aledo, 97000816

Ogle County

Chicago, Burlington, and Quincy Railroad Depot, 400 Collins St., Oregon, 97000817

KANSAS

Johnson County

Horn—Vincent—Russell Estate, 6624 Wenonga Rd., Mission Hills, 97000819

MASSACHUSETTS

Berkshire County

Whittlesey, Charles, Power House, 575 South St., Pittsfield, 97000820

NEW MEXICO

Dona Ana County

Elephant Butte Irrigation District, Roughly along US 85, between jct. of US 85 and NM 90, and El Paso City Limits, Las Cruces vicinity, 97000822

NEW YORK

Columbia County

Ludlow, William Henry, House (Claverack MPS), 465 NY 23B, Claverack, 97000826

Miller, Harmon, House (Claverack MPS), 6109 9H, Claverack, 97000827

Miller, Stephen, House (Claverack MPS), 114 NY 23, Claverack, 97000825

Muller, Cornelius S., House (Claverack MPS), 602 NY 23B, Claverack, 97000823

Van Ness, William W., House (Claverack MPS), 270 NY 9H, Claverak, 97000824

NORTH DAKOTA

McKenzie County

Birdhead Ranch House, On the shore of Lake Sakawea, NE of Alexander, Alexander vicinity, 97000821

VERMONT

Windsor County

Windsor Village Historic District (Boundary Increase), Along Phelps Ct. and State St., Windsor, 97000828

A correction is hereby made to the following property that appeared on the 7/1/97 Pending List:

OKLAHOMA

Caddo County

Provine Service Station, (Route 66 in Oklahoma MPS), Rt. 66, 0.5 mi. W of jct. Of OK 58 and I–40, Hydro vicinity, 97000803

[FR Doc. 97–17906 Filed 7–8–97; 8:45 am]

BILLING CODE 4310–70–P

DEPARTMENT OF THE INTERIOR

Bureau of Reclamation

Request for Proposals for Research and Data Collection in Support of Research Center Activities

AGENCY: Grand Canyon Monitoring and Research Center, Interior.

ACTION: Notice of requests for proposals.

SUMMARY: The Grand Canyon Monitoring and Research Center through the Bureau of Reclamation, Upper Colorado Regional Office in Salt Lake City, Utah, is issuing Requests for Proposal (RFP) for research and data collection for conceptual modeling physical, biological, cultural, and socio-economic resources activities, and scientific advisory services in support of the Grand Canyon Monitoring and Research Center Fiscal Year 98 monitoring and research plan.

DATES: The RFP is intended to be available by July 3, 1997. Receipt of proposals is scheduled for August 6, 1997. Proposals must be received no later than 4:00 p.m. MDT, at the address noted below.

ADDRESSES: The solicitation is available electronically via the following Internet addresses: http://www.uc.usbr.gov/acquisition/acquisitions.html, and http://www.usbr.gov/gces/rfp. Address for receipt of proposals: Bureau of Reclamation, Upper Colorado Regional Office, Acquisition Management Group, Attention: UC–450, 125 South State Street, Room 6103, Salt Lake City, UT 84138–1102.

FOR FURTHER INFORMATION CONTACT: Rebecca Williams, at (801) 524–3770, or Vonna Ward at (801) 524–3762.

SUPPLEMENTARY INFORMATION: Publication is made in the **Federal Register** in accordance with the responsibilities and authorities of Title XVIII of P.L. 102–575.

Dated: July 3, 1997.

Mark Schaefer,

Deputy Assistant Secretary—Water and Science.

[FR Doc. 97–17936 Filed 7–8–97; 8:45 am]

BILLING CODE 4310–94–M

INTERNATIONAL DEVELOPMENT COOPERATION AGENCY

Overseas Private Investment Corporation

Submission for OMB Review; Comment Request

AGENCY: Overseas Private Investment Corporation, IDCA.

ACTION: Request for comments.

SUMMARY: Under the provisions of the Paperwork Reduction Act (44 U.S.C. Chapter 35), Agencies are required to publish a Notice in the **Federal Register** notifying the public that the Agency is preparing an information collection request for OMB review and approval and to request public review and comment on the submission. Comments are being solicited on the need for the information, its practical utility, the accuracy of the Agency's burden estimate, and on ways to minimize the reporting burden, including automated collection techniques and uses of other forms of technology. The proposed form under review is summarized below.

DATES: Comments must be received on or before September 8, 1997.

ADDRESSES: Copies of the subject form and the request for review prepared for submission to OMB may be obtained from the Agency Submitting Officer. Comments on the form should be submitted to the Agency Submitting Officer.

FOR FURTHER INFORMATION CONTACT: *OPIC Agency Submitting Officer:* Lena Paulsen, Manager, Information Center, Overseas Private Investment Corporation, 1100 New York Avenue, NW., Washington, DC 20527; 202/336–8565.

Summary of Form Under Review

Type of Request: Revised form.

Title: Application for Political Risk Investment Insurance.

Form Number: OPIC–52.

Frequency of Use: Once per investor per project.

Type of Respondents: Business or other institutions (except farms); individuals.

Standard Industrial Classification Codes: All.

Description of Affected Public: U.S. companies or citizens investing overseas.

Reporting Hours? 6 hours per project plus an additional 2 hours for oil & gas projects.

Number of Responses: 160 per year.

Federal Cost: $4,000 per year.

Authority for Information Collection: Sections 231, 234(a), 239(d), and 240A of the Foreign Assistance Act of 1961, as amended.

Abstract (Needs and Uses): The application is the principal document used by OPIC to determine the investor's and project's eligibility, assess the environmental impact and developmental effects of the project, measure the economic effects for the United States and the host country economy, and collect information for underwriting analysis.

Dated: July 2, 1997.

James R. Offutt,

Assistant General Counsel, Department of Legal Affairs.

[FR Doc. 97–17793 Filed 7–8–97; 8:45 am]

BILLING CODE 3210–01–M

INTERNATIONAL TRADE COMMISSION

[Investigation No. 337–TA–391]

Certain Toothbrushes and the Packaging Thereof; Notice of Commission Determination Not To Review an Initial Determination Granting Complainant's Motion for Partial Termination of the Investigation Based on Withdrawal of Allegations of Copyright Infringement

AGENCY: U.S. International Trade Commission.

ACTION: Notice.

SUMMARY: Notice is hereby given that the U.S. International Trade Commission has determined not to review the presiding administrative law judge's (ALJ's) initial determination (ID) in the above-captioned investigation granting complainant The Procter & Gamble Company's motion for partial termination of the investigation based on the withdrawal of allegations concerning infringement of U.S. Copyright Registration No. TX 4–103–537.

FOR FURTHER INFORMATION CONTACT: Anjali K. Hansen, Esq., Office of the General Counsel, U.S. International Trade Commission, telephone 202–205–3117.

SUPPLEMENTARY INFORMATION: The Commission instituted this investigation on November 22, 1996, based on a complaint filed by The Procter & Gamble Company. In addition to allegations of patent infringement, the complaint alleged copyright infringement by the following respondents: Shummi Enterprise Corporation, Shummei Industrial Co. Ltd., Lollipop Imports and Exports, and Giftline International Corporation (copyright respondents). During the course of discovery, complainant became aware that it was not currently utilizing packaging embodying the copyright at issue. Consequently, on March 3, 1997, complainant moved for partial termination of the investigation with respect to the subject copyright allegations pursuant to Commission rule 210.21(a)(1). The Commission investigative attorney filed a response in support of complainant's motion. None of the copyright respondents filed a response to the motion. No petitions for review of the ID were filed.

This action is taken under the authority of section 337 of the Tariff Act of 1930, 19 U.S.C. § 1337, and Commission rule 210.42, 19 CFR § 210.42.

Copies of the ID and all other nonconfidential documents filed in connection with this investigation are or will be available for inspection during official business hours (8:45 a.m. to 5:15 p.m.) in the Office of the Secretary, U.S. International Trade Commission, 500 E Street S.W., Washington, D.C. 20436, telephone 202–205–2000. Hearing-impaired persons are advised that information on the matter can be obtained by contacting the Commission's TDD terminal on 202–205–1810.

By order of the Commission.

Issued: July 1, 1997.

Donna R. Koehnke,

Secretary.

[FR Doc. 97–17921 Filed 7–8–97; 8:45 am]

BILLING CODE 7020–02–P

DEPARTMENT OF JUSTICE

Bureau of Justice Statistics

Agency Information Collection Activities: Extension of a Currently Approved Collection; Comment Request

ACTION: Notice of information collection under review; National Crime Victimization Survey.

The Department of Justice, Bureau of Justice Statistics previously published this notice in the **Federal Register** on April 16, 1997 for 60 days. During this comment period no comments were received by the Department of Justice. The purpose of this notice is to allow an additional 30 days for public comments. Comments are encouraged and will be accepted until August 8, 1997.

This information collection is published to obtain comments from the public and comments should be directed to OMB, Office of Information and Regulatory Affairs, Attention: Ms.

Victoria Wassmer, 202–395–5871, Department of Justice Desk Officer, Washington, DC 20530.

Your comments should address one or more of the following four points:

1. Evaluate whether the collection of information is necessary for the proper performance of the functions of the agency, including whether the information will have practical utility;

2. Evaluate the accuracy of the agencies estimate of the burden of the collection of information, including the validity of the methodology and assumptions used;

3. Enhance the quality, utility, and clarity of the information to be collected; and

4. Minimize the burden of the collection of information on those who are to respond, including through the use of appropriate automated, electronic, mechanical, or other technological collection techniques or other forms of information technology, e.g., permitting electronic submission of responses.

Additionally, comments may also be submitted to the Department of Justice (DOJ), Justice Management Division, Information Management and Security Staff, Attention: Department Clearance Officer, Suite 850, Washington Center, 1001 G Street, NW., Washington, DC 20530. Additional comments may be submitted to DOJ via facsimile at 202–514–1590.

Overview of this information collection:

1. *Type of Information collection:* Extension of a currently approved collection.

2. *Title of the Form/Collection:* National Crime Victimization Survey.

3. *Agency form number and applicable components:*

Forms: NCVS–1; NCVS–1A; NCVS–1A(SP); NCVS–2; NCVS–2(SP); NCVS–7; NCVS–110; NCVS–500; NCVS–541; NCVS–545; NCVS–548; NCVS–551; NCVS–554; NCVS–554(SP);NCVS–572(L)KOR/SP/CHIN(T)/CHIN(m)/VIET; NCVS–573(L); NCVS593(l); and NCVS–594(L). Component: Victimization Statistics Branch, Bureau of Justice Statistics, Office of Justice Programs, United States Department of Justice.

(4) *Affected public who will be asked to respond:* Primary: US households and individuals age 12 or older.

(5) *An estimate of the total number of respondents and the amount of time estimated for an average respondent to respond:* 111, 100 respondents at 1.95 hours per interview.

(6) *An estimate of the total public burden (in hours) associated with the collection:* 217,000 hours annual burden.

Public comment on this proposed information collection is strongly encouraged.

Dated: July 3, 1997.

Robert B. Briggs,

Department Clearance Officer, United States Department of Justice.

[FR Doc. 97–17957 Filed 7–8–97; 8:45 am]

BILLING CODE 4410–18–M

DEPARTMENT OF JUSTICE

Notice of Lodging of Consent Decree Pursuant to the Comprehensive Environmental Response Compensation and Liability Act

In accordance with Departmental policy, notice is hereby given that a proposed consent decree in *United States* v. *Velsicol Chemical Corporation*, No. 4:49–CV–258–HLM, was lodged on June 17, 1997 with the United States District Court for the Northern District of Georgia. Under the consent decree the United States is settling claims against Defendant Velsicol Chemical Corporation under Section 107 of the Comprehensive Environmental Response, Compensation, and Liability Act of 1980, as amended, (''CERCLA''), 42 U.S.C. 9607, in connection with the Shaver's Farm Site in northern Georgia. Pursuant to the Consent Decree Velsicol will reimburse the Superfund $6,280,560.

The Department of Justice will receive, for a period of thirty (30) days from the date of this publication, comments relating to the proposed consent decree. Comments should be addressed to the Assistant Attorney General for the Environment and Natural Resources Division, Department of Justice, Washington, DC 20530, and should refer to *United States* v. *Velsicol Chemical Corpoation*, DOJ Ref. #90–11–2–886. The proposed consent decree may be examined at the office of the United States Attorney, Richard Russell Bldg., Rm. 1800, 75 Spring Street, Atlanta, Georgia 30335; the Region IV Office of the Environmental Protection Agency, 61 Forsyth Street, SW., Atlanta, Georgia 30303–3104; and at the Consent Decree Library, 1120 G Street, NW., 4th Floor, Washington, DC 20005, (202) 624–0892. A copy of the proposed consent decree may be obtained in person or by mail from the Consent Decree Library, 1120 G Street, NW., 4th Floor, Washington, DC 20005. In requesting a copy please refer to the referenced case and enclose a check in the amount of $5.25 (25 cents per page reproduction costs), payable to the Consent Decree Library.

Joel M. Gross,

Chief, Environmental Enforcement Section, Environmental and Natural Resources Division.

[FR Doc. 97–17924 Filed 7–8–97; 8:45 am]

BILLING CODE 4410–15–M

DEPARTMENT OF JUSTICE

Drug Enforcement Administration

Anne D. DeBlanco, M.D.; Denial of Application

On January 29, 1997, the Deputy Assistant Administrator, Office of Diversion Control, Drug Enforcement Administration (DEA), issued an Order to Show Cause to Anne D. DeBlanco, M.D., of Fort Lauderdale, Florida, notifying her of an opportunity to show cause as to why DEA should not deny her application, dated May 26, 1995, for a DEA Certificate of Registration as a practitioner pursuant to 21 U.S.C. 823(f), for reason that her registration would be inconsistent with the public interest, as that term is used in 21 U.S.C. 823(f). Specifically, the Order to Show Cause alleged that, ''(Dr. DeBlanco) submitted a DEA application for registration, dated May 25, 1995, in which (she) materially falsified a response by indicating 'no' to a question which asked in part 'whether (she) had ever had a State professional license or controlled substance registration revoked, suspended, denied, restricted, or placed on probation.' (Dr. DeBlanco) knew that on May 10, 1995, the State of Florida Board of Medicine had placed (her) state medical license on probation for a period of three years, and that the State of Ohio had revoked (her) license to practice medicine in that state on May 9, 1990.'' The order also notified Dr. DeBlanco that should no request for a hearing be filed within 30 days, her hearing right would be deemed waived.

The DEA received a signed receipt indicating that the order was received on February 10, 1997. No request for a hearing or any other reply was received by the DEA from Dr. DeBlanco or anyone purporting to represent her in this matter. Therefore, the Acting Deputy Administrator, finding that (1) 30 days have passed since the receipt of the Order to Show Cause, and (2) no request for a hearing having been received, concludes that Dr. DeBlanco is deemed to have waived her hearing right. After considering the relevant material from the investigative file in this matter, the Acting Deputy Administrator now enters his final order

without a hearing pursuant to 21 C.F.R. 1301.43(d) and (3) and 1301.46.

The Acting Deputy Administrator finds that on or about September 18, 1989, Dr. DeBlanco was found guilty in the Common Pleas Court of Franklin County, Ohio of one count of Medicaid fraud, one count of grand theft, and ten counts of forgery as a result of allegations that Dr. DeBlanco inappropriately billed Medicaid for services which she did not provide. Thereafter, on May 11, 1990, the State Medical Board of Ohio (Ohio Board) revoked Dr. DeBlanco's license to practice medicine and surgery. Subsequently, in a Final Order dated May 10, 1995, the State of Florida, Board of Medicine, (Florida Board) placed Dr. DeBlanco's medical license on probation for three years subject to various terms and conditions. This action was based upon convictions, the action of the Ohio Board, and her failure to report the action of the Ohio Board to the Florida Board.

On May 26, 1995, Dr. DeBlanco submitted an application for a DEA Certificate of Registration. Dr. DeBlanco answered ''no'' to the question which asked, ''Has the applicant ever been convicted of a crime in connection with controlled substances under State or Federal law, or ever surrendered or had a Federal controlled substance registration revoked, suspended, restricted or denied, or ever had a State professional license or controlled substance registration revoked, suspended, denied, restricted or placed on probation?'' A DEA investigator contacted Dr. DeBlanco to inquire about her negative response to the question on the application. By letter dated August 17, 1995, Dr. DeBlanco indicated that she ''did not adequately understand the question.'' Dr. DeBlanco stated that:

> I have never been convicted of a crime concerning controlled substances or had a DEA problem. I lost my Ohio license because of a billing error. Case is no appeal, possibly will be over-turned at a scheduled hearing September 29, 1995. Have had Florida license since 1977 with never a problem. Never been a question about my medical care. My license is unrestricted on probation due to 1989 Ohio problem. * * *

Pursuant to 21 U.S.C. § 823(f), the Deputy Administrator may deny an application for a DEA Certificate of Registration if he determines that such registration would be inconsistent with the public interest. In determining the public interest, the following factors are considered:

(1) The recommendation of the appropriate State licensing board or professional disciplinary authority.

(2) The applicant's experience in dispensing, or conducting research with respect to controlled substances.

(3) The applicant's conviction record under Federal or State laws relating to the manufacture, distribution, or dispensing of controlled substances.

(4) Compliance with applicable State, Federal, or local laws relating to controlled substances.

(5) Such other conduct which may threaten the public health and safety.

These factors are to be considered in the disjunctive; the Deputy Administrator may rely on any one or combination of factors and may give each factor the weight he deems appropriate in determining whether a registration should be revoked or an application for registration be denied. See Henry J. Schwarz, Jr., M.D., Docket No. 88–42, 54 FR 16422 (1989).

The Acting Deputy Administrator finds that there is no evidence before him that Dr. DeBlanco has improperly dispensed controlled substances or that she has been convicted of an offense relating to controlled substances. However, it is undisputed that the Ohio Board revoked her Ohio medical license and the Florida Board placed her Florida medical license on probation for three years. In her August 1995 letter to DEA, Dr. DeBlanco alleged that the Ohio Board's action was on appeal and could be overturned following a scheduled hearing in September 1995, however, Dr. DeBlanco did not respond to the Order to Show Cause and therefore did not present any evidence that the Ohio Board's action has been overturned. Consequently, based upon the evidence before him, the Acting Deputy Administrator concludes that Dr. DeBlanco's Ohio medical license remains revoked.

Regarding factors four and five, the Acting Deputy Administrator finds that Dr. DeBlanco violated 21 U.S.C. 843(a)(4) by indicating on her application for registration that she had never had a State professional license or controlled substance registration revoked, suspended, denied, restricted or placed on probation, when in fact Ohio had revoked her medical license in 1990, and Florida had placed her license on probation for three years just weeks before she submitted her application for registration with DEA. Dr. DeBlanco did not respond to the Order to Show Cause and therefore did not offer any evidence regarding the falsification. In her August 1995 letter to DEA, Dr. DeBlanco indicated that she did not adequately understand the question. However, the Acting Deputy Administrator finds that the question is clearly worded and therefore concludes that Dr. DeBlanco falsified her application for registration. It has been held in previous cases that, ''(s)ince DEA must rely on the truthfulness of information supplied by applicants in registering them to handle controlled substances, falsification can not be tolerated.'' Bobby Watts, M.D., 58 FR 46995 (1993); see also, Leonel Tano, M.D., 62 FR 22968 (1997).

The Acting Deputy Administrator concludes that based upon the action taken against her medical licenses in Ohio and Florida, her material falsification of her application for registration, and the lack of any mitigating evidence offered in response to the Order to Show Cause, Dr. DeBlanco's application must be denied at this time.

Accordingly, the Acting Deputy Administrator of the Drug Enforcement Administration, pursuant to the authority vested in him by 21 U.S.C. 823 and 28 CFR 0.100(b) and 0.104, hereby orders that the application, submitted by Anne D. Dr. DeBlanco, M.D., on May 26, 1995, for a DEA Certificate of Registration, be, and it hereby is denied. This order is effective August 8, 1997.

Dated: June 30, 1997.

James S. Milford,

Acting Deputy Administrator.

[FR Doc. 97–17784 Filed 7–8–97; 8:45 am]

BILLING CODE 4410–09–M

DEPARTMENT OF JUSTICE

Drug Enforcement Administration

Paul W. Teegardin, D.V.M.; Denial of Application

On February 25, 1997, the Deputy Assistant Administrator, Office of Diversion Control, Drug Enforcement Administration (DEA), issued an Order to Show Cause to Paul W. Teegardin, D.V.M., of Ashville, Ohio, notifying him of an opportunity to show cause as to why DEA should not deny his application, dated December 6, 1995, for a DEA Certificate of Registration as a practitioner pursuant to 21 U.S.C. 823(f), for reason that his registration would be inconsistent with the public interest. Specifically, the Order to Show Cause alleged that:

''(1) (Dr. Teegardin's) last DEA registration, AT6745648, expired in November 1997. On two occasions in 1990–91, (he) prescribed for (himself) and received diazepam injectable, a Schedule IV controlled substance, and Darvocet, a Schedule IV controlled substance. These prescriptions were issued not in the course of usual professional practice and not for a

legitimate medical purpose, in violation of 21 U.S.C. §§ 841(a)(1) and 843(a)(3).

(2) On July 29, 1995, (Dr. Teegardin) prescribed for (himself) and received Darvocet, a Schedule IV controlled substance. On August 10, 1995, (he) prescribed diazepam injectable, a Schedule IV controlled substance, purportedly for administration to a feline patient. These prescriptions were issued not in the course of usual professional practice and not for a legitimate medical purpose, in violation of 21 U.S.C. §§ 841(a)(1) and 843(a)(3)''. The order also notified Dr. Teegardin that should not request for a hearing be filed within 30 days, his hearing right would be deemed waived.

The Order to Show Cause was personally served on Dr. Teegardin on April 2, 1997. No request for a hearing or any other reply was received by the DEA from Dr. Teegardin or anyone purporting to represent him in this matter. Therefore, the Acting Deputy Administrator, finding that (1) 30 days have passed since the receipt of the Order to Show Cause, and (2) no request for a hearing having been received, concludes that Dr. Teegardin is deemed to have waived his hearing right. After considering the relevant material from the investigative file in this matter, the Acting Deputy Administrator now enters his final order without a hearing pursuant to 21 C.F.R. 1301.43 (d) and (e) and 1301.46.

The Acting Deputy Administrator finds that Dr. Teegardin has not possessed a valid DEA Certificate of Registration since 1977. A joint investigation by DEA and the Ohio Veterinary Medical Licensing Board (Board) revealed that Dr. Teegardin had issued at least four controlled substance prescriptions while not authorized to do so. On October 4, 1995, during an interview with a Board investigator, Dr. Teegardin admitted that in the past approximately ten years, he had issued prescriptions to himself for ''dangerous drugs'' to treat an unidentified health problem and had issued prescriptions to a Clara Teegardin for a non-veterinary purpose.

The investigation also revealed that Dr. Teegardin issued a prescription for Valium, a Schedule IV controlled substance, for the cat of a retired dentist, which was telephoned into a local pharmacy. On December 4, 1995, after Dr. Teegardin discovered that the Board was questioning the issuance of the prescription, Dr. Teegardin reportedly contacted the pharmacist and the retired dentist and attempted to convince them to remove his name as the prescriber on the prescription and to replace his name with the name of the retired dentist. In addition, Dr. Teegardin admitted that he failed to maintain patient files or medical records in certain situations which is a violation of state law and he failed to comply with several subpoenas issued by the Board also in violation of state law.

On February 19, 1997, the Board and Dr. Teegardin entered into a settlement agreement whereby Dr. Teegardin was suspended for 60 days from the practice of veterinary medicine and fined $500.00. In addition, Dr. Teegardin's license was placed on probation with the requirement that he attend 60 hours of continuing education.

Pursuant to 21 U.S.C. § 823(f), the Deputy Administrator may deny an application for a DEA Certificate of Registration if he determines that such registration would be inconsistent with the public interest. In determining the public interest, the following factors are considered:

(1) The recommendation of the appropriate State licensing board or professional disciplinary authority.

(2) The applicant's experience in dispensing, or conducting research with respect to controlled substances.

(3) The applicant's conviction record under Federal or State laws relating to the manufacture, distribution, or dispensing of controlled substances.

(4) Compliance with applicable State, Federal, or local laws relating to controlled substances.

(5) Such other conduct which may threaten the public health and safety.

These factors are to be considered in the disjunctive; the Deputy Administrator may rely on any one or a combination of factors and may give each factor the weight he deems appropriate in determining whether a registration should be revoked or an application for registration be denied. See Henry J. Schwarz, Jr., M.D., Docket No. 88–42, 54 FR 16422 (1989).

Dr. Teegardin issued prescriptions for controlled substances without being registered with DEA to do so. As a result, he violated both Federal and state law regarding controlled substances. In addition, he failed to comply with other state laws regarding his practice of veterinary medicine. Based upon the Board's investigation, Dr. Teegardin's license to practice veterinary medicine was suspended for a period of time and then placed on probation. The Acting Deputy Administrator is particularly troubled by Dr. Teegardin's efforts, after learning that he was under investigation, to have his name removed as the prescriber from a controlled substance prescription. Dr. Teegardin did not respond to the Order to Show Cause and therefore did not offer any mitigation evidence. Consequently, the Acting Deputy Administrator concludes that based upon the evidence before him, Dr. Teegardin's registration would be inconsistent with the public interest.

Accordingly, the Acting Deputy Administrator of the Drug Enforcement Administration, pursuant to the authority vested in him by 21 U.S.C. 823 and 28 CFR 0.100(b) and 0.104, hereby orders that the application, submitted by Paul W. Teegardin, D.V.M., on December 6, 1995, for a DEA Certificate of Registration, be, and it hereby is, denied. This order is effective August 8, 1997.

Dated: July 1, 1997.

James S. Milford,

Acting Deputy Administrator.

[FR Doc. 97–17785 Filed 7–8–97; 8:45 am]

BILLING CODE 4410–09–M

DEPARTMENT OF JUSTICE

Immigration and Naturalization Service

Agency Information Collection Activities: Proposed Collection; Comment Request

ACTION: Request OMB emergency approval; Application for naturalization.

The Department of Justice, Immigration and Naturalization Service has submitted the following information collection request (ICR) utilizing emergency review procedures, to the Office of Management and Budget (OMB) for review and clearance in accordance with the Paperwork Reduction Act of 1995. OMB approval has been requested by July 31, 1997. If granted, the emergency approval is only valid for 180 days. Comments should be directed to OMB, Office of Information and Regulatory Affairs, Attention: Ms. Debra Bond, 202–395–7316, Department of Justice Desk Officer, Washington, DC 20503.

During the first 60 days of this same period a regular review of this information collection is also being undertaken. Comments are encouraged and will be accepted until September 8, 1997. Request written comments and suggestions from the public and affected agencies concerning the proposed collection of information. Your comments should address one or more of the following four points.

(1) Evaluate whether the proposed collection of information is necessary for the proper performance of the functions of the agency, including whether the information will have practical utility;

(2) Evaluate the accuracy of the agencies estimate of the burden of the proposed collection of information, including the validity of the methodology and assumptions used;

(3) Enhance the quality, utility, and clarity of the information to be collected; and

(4) Minimize the burden of the collection of information on those who are to respond, including through the use of appropriate automated, electronic, mechanical, or other technological collection techniques or other forms of information technology, e.g., permitting electronic submission of responses.

Overview of this information collection:

(1) *Type of Information Collection:* Extension of a currently approve information collection.

(2) *Title of the Form/Collection:* Application for Naturalization.

(3) *Agency form number, if any, and the applicable component of the Department of Justice sponsoring the collection:* Form N–400. Adjudications Division, Immigration and Naturalization Service.

(4) *Affected public who will be asked or required to respond, as well as a brief abstract:* Primary: Individuals or Households. This information collection allows the Service to determine whether lawful permanent residents are eligible to become naturalized citizens of the United States.

(5) *An estimate of the total number of respondents and the amount of time estimated for an average respondent to respond:* 1,806,394 respondents at 4 hours and 20 minutes (4.33) per response.

(6) *An estimate of the total public burden (in hours) associated with the collection:* 7,821,686 annual burden hours.

If you have additional comments, suggestions, or need a copy of the proposed information collection instrument with instructions, or additional information, please contact Mr. Richard A. Sloan, 202–616–7600, director, Policy Directives and Instructions Branch, Immigration and Naturalization Service, U.S. Department of Justice, Room 5307, 425 I Street, NW., Washington, DC 20536.

If additional information is required contact: Mr. Robert B. Briggs, Clearance Officer, United States Department of Justice, Information Management and Security Staff, Justice Management Division, Suite 850, Washington Center, 1001 G Street, NW, Washington, DC 20530.

Dated: July 2, 1997.

Robert B. Briggs,

Department Clearance Officer, United States Department of Justice.

[FR Doc. 97–17844 Filed 7–8–97; 8:45 am]

BILLING CODE 4410–18–M

DEPARTMENT OF JUSTICE

Office of Justice Programs

Agency Information Collection Activities: Proposed Collection; Comment Request

AGENCY: Office of Justice Programs, Bureau of Justice Assistance, Justice.

ACTION: Notice of information collection under review.

SUMMARY: The Bureau of Justice Assistance is seeking comments on a proposed application form relating to applicant information collection under the Federal Law Enforcement Dependents Assistance Act of 1996.

DATES: Comments are due by September 8, 1997.

ADDRESSES: Comments should be sent to Chief, Public Safety Officers' Benefits Office, Office of Justice Programs, U.S. Department of Justice, 733 Indiana Avenue, NW., Washington, DC 20531.

FOR FURTHER INFORMATION CONTACT: Mr. Robert B. Briggs, Clearance Officer, United States Department of Justice, Information Management and Security Staff, Justice Management Division, Suite 850, Washington Center, 1001 G Street, NW., Washington, DC 20530.

SUPPLEMENTARY INFORMATION: The proposed application form is published to obtain comments from the public and affected agencies. Comments are encouraged and will be accepted for 60 days from the date listed at the top of this page in the **Federal Register**. Request written comments and suggestions from the public and affected agencies concerning the proposed application form. Your comments should address one or more of the following four points:

(1) Evaluate whether the proposed application form is necessary for the proper performance of the functions of the agency, including whether the information will have practical utility;

(2) Evaluate the accuracy of the agency's estimate of the burden of the proposed collection of information, including the validity of the methodology and assumptions used;

(3) Enhance the quality, utility, and clarity of the information to be collected; and

(4) Minimize the burden of the collection of information on those who are to respond, including through the use of appropriate automated, electronic, mechanical, or other technological collection techniques or other forms of information technology, e.g., permitting electronic submission of responses.

If you have additional comments, suggestions, or need a copy of the proposed application form or additional information, please contact Jeff Allison, (202) 616–3661, Public Safety Officers' Benefits Office, Office of Justice Programs, U.S. Department of Justice, 633 Indiana Avenue, NW., Washington, DC 20531.

Overview of This Information Collection

(1) *Type of Information Collection:* Initial collection of information.

(2) *Title of the Form/Collection:* Application for Federal Law Enforcement Dependents Assistance.

(3) *Agency form number, if any, and the applicable component of the Department of Justice sponsoring the collection:* Bureau of Justice Assistance, Office of Justice Programs, Department of Justice.

(4) *Affected public who will be asked or required to respond, as well as a brief abstract:* Primary: Children and spouses of Federal civilian law enforcement officers who were killed or permanently and totally disabled in the line of duty and are seeking financial assistance for the purpose of higher education. Other: None. This program is administered under the authority of 42 U.S.C. 3796 et seq. to provide financial assistance in the form of awards to the children and spouses of Federal civilian law enforcement officers whose deaths or permanent and total disabilities in the line of duty resulted in the payment of benefits under the Public Safety Officers' Benefits (PSOB) Program. The Application Form will be completed by each eligible applicant and will provide information regarding educational experience, educational goals, and estimated cost of educational plan for verification and award processing.

(5) *An estimate of the total number of respondents and the amount of time estimated for an average respondent to respond:* 50 responses annually at 2 hours per respondent.

(6) *An estimate of the total public burden (in hours) associated with the collection:* (100) annual burden hours.

If additional information is required contact: Mr. Robert B. Briggs, Clearance Office, Department of Justice, Information Management and Security Staff, Justice Management Division, Suite 850, Washington Center, 1001 G Street, NW., Washington, DC 20530.

Dated: July 2, 1997.

Robert B. Briggs,

Department Clearance Officer, Department of Justice.

[FR Doc. 97–17843 Filed 7–8–97; 8:45 am]

BILLING CODE 4410–18–M

DEPARTMENT OF JUSTICE

Office of Justice Programs

[OJP(BJS)–1132]

RIN 1121–ZA78

Solicitation for Award of Cooperative Agreement

AGENCY: Office of Justice Programs, Bureau of Justice Statistics, Justice.

ACTION: Solicitation for Award of Cooperative Agreement.

SUMMARY: This notice announces a public solicitation for a 12 to 18 month project to develop model definitions and data collection protocols for statistical data describing levels of domestic violence. Although a majority of States and the Federal Government collect statistics related to domestic violence offenses, there is a great variation in how each agency, State, or program (1) defines the offenses, and (2) collects the data. Statutory language across States varies with references to family violence, domestic violence, intimate violence, etc. Criteria for inclusion or exclusion (as determined by the victim/offender relationship) are widely divergent. Some include child victims as well as adults. Others are more restrictive. Types of relationships and various living situations are handled differently across jurisdictions. This plethora of definitions and data collection standards may serve local purposes, but create barriers for comparability and the extent to which data can be aggregated across jurisdictions or data sources. The present proposed project addresses these issues and creates a framework to maximize comparability, evaluation, and understanding of the prevalence and incidence of ''domestic violence.''

DATES: Proposals must be postmarked on or before September 3, 1997.

ADDRESSES: Proposal should be mailed to: Applications Coordinator, Bureau of Justice Statistics, Room 303, 633 Indiana Avenue NW., Washington, DC 20531.

FOR FURTHER INFORMATION CONTACT: Carol G. Kaplan, Chief, Criminal History Improvement Programs, Bureau of Justice Statistics, Room 303, 633 Indiana Avenue NW, Washington, DC 20531, (202) 307–0759.

SUPPLEMENTARY INFORMATION:

Background

The Bureau of Justice Statistics, the statistical agency of the U.S. Department of Justice, is authorized to ''recommend national standards for justice statistics and for insuring the reliability and validity of justice statistics.'' See the Omnibus Crime Control and Safe Streets Act of 1968, as amended, 42 U.S.C. § 3732(8). BJS provided and continues to provide (1) assistance to States in upgrading the quality of criminal history record systems, and (2) coordination among States and between the States, BJS, and other Federal agencies, particularly with respect to data quality and exchange.

Objective

The major purpose of this project is to develop model definitions and data collection protocols for statistical data describing levels of domestic/family/sexual violence.

Type of Assistance

Assistance will be made available under a cooperative agreement.

Statutory Authority

The cooperative agreement to be awarded pursuant to this solicitation will be funded by the Bureau of Justice Statistics consistent with its authorization under 42 U.S.C. 3732 (8) and the Violent Crime Control and Law Enforcement Act of 1994 Title IV Section 40292 (the Violence Against Women Act).

Eligibility Requirements

Both profit-making and nonprofit-making organizations may apply for funds. Consistent with OJP fiscal requirements, no fees may be charged against the project by profit-making organizations (this includes cost of facilities capital).

Scope of Work

The objective of the proposed project is to develop model definitions and data collection protocols for statistical data describing levels of domestic/family/sexual violence. Specifically, the recipient of funds will:

1. Establish and convene two working groups: (1) A small (6–10 persons) Task Force to draft definitions, and (2) a more comprehensive Advisory Group (20–25 persons) to provide input to, review, and endorse the Task Force products. The Advisory Group will meet at least 3 times and the Task Force will be convened at least 5 times during the course of the project.

Representatives of all interested groups (statistical, data systems, domestic violence victims, etc.) will be included on the Advisory Group. Researchers or persons with statistical experience and/or expertise will be included on the Task Force. BJS will provide key input to the selection of membership on both groups. Staff work (including both administrative support for meetings, payment, and substantive drafting tasks) for both groups will be provided by the recipient organization.

2. Develop and support BJS publication of model definitions and data collection protocols. Under this task, the recipient organization will have responsibility for:

(A) Convening the Task Force and Advisory Group;

(B) Preparing and circulating materials to facilitate discussion. Materials for circulation at meetings should include, but are not limited to: (1) A state of the art report based on the findings in the NIJ/BJS/JRSA report ''Domestic and Sexual Violence Data Collection: A Report to Congress under the Violence Against Women Act'' (July 1996) and an analysis of other relevant definitions used outside the criminal justice system, and (2) an analysis of the technical, policy, and statistical issues related to the establishment of domestic/sexual violence definitions;

(C) Working with the Task Force to draft materials for approval by the Advisory Group;

(D) Preparing, or assisting in the preparation of, draft model definitions and data collection standards for publication by BJS in the **Federal Register**; and

(E) Preparing an accompanying document discussing the proposed definitions in terms of the policy, technical, and feasibility issues described above.

3. Facilitating interaction among BJS, the members of the Task Force and the Advisory Group by:

(A) Establishing a centralized mechanism for exchange of information regarding domestic/sexual violence related grants from the Office of Justice Programs (and/or other Federal agencies) in which the tasks involve developing or revising data collection systems or forms; and

(B) Creating and supporting a limited access conference capability (LISTSERV) for the duration of the project.

4. Assisting BJS in activities connected with the publication of the draft model definitions and standards in the **Federal Register**. (Publication would be handled by BJS). If deemed necessary, this may include convening and staffing a meeting to describe and discuss the proposed definitions.

5. Collating and reviewing comments and drafting the revised definitions and standards for final approval by BJS and the Advisory Group and subsequent publication in the **Federal Register**. Publication in the **Federal Register** will be handled by BJS.

Award Procedures

Proposals should describe in appropriate detail the efforts to be undertaken in furtherance of each of the activities described in the Scope of Work. Information should focus on the activities to be undertaken and the staffing levels and qualifications for each task. Descriptions of experience relevant to the project also should be included.

Applications will be competitively reviewed by a BJS-selected panel which will make recommendations to the Director of BJS. Final authority to enter into a cooperative agreement is reserved for the Director who may, at his discretion, determine that none of the applications shall be funded.

Applications will be evaluated on the overall extent to which they respond to the goals of the project, demonstrate an understanding and ability to perform the specific activities to be conducted and appear to be fiscally feasible and efficient. In addition, applicants will be evaluated on the basis of the following criteria:

(A) Knowledge of, and experience working in, the statistical and data systems environment at the Federal and State levels;

(B) Knowledge of the special concerns raised by groups that focus on domestic violence reduction and victim support;

(C) Knowledge, experience, and expertise in the technical, policy, and feasibility issues relating to statistical data collection and the specific problems associated with collection of data on domestic violence;

(D) Credibility among the statistical, systems, and domestic violence communities based on prior activity and current affiliations;

(E) Demonstrated ability and experience in bringing together divergent groups to facilitate agreement on complex and high visibility issues;

(F) Demonstrated track record in producing written reports accessible to an audience of State policy makers;

(G) Demonstrated experience in convening and managing meetings involving multiple attendants from different organizations; and

(H) Reasonableness of estimated costs for the total project and for individual cost categories.

Application and Awards Process

An original and two (2) copies of a full proposal must be submitted on SF–424 (Revision 1988), Application for Federal Assistance, as the cover sheet. Proposals must be accompanied by a budget detail worksheet; OJP Form 4061/6, Certifications Regarding Lobbying, Debarment, Suspension and other Responsibility Matters; Drug-Free Workplace; and OJP Form 7120–1 (Rev. 1–93), Accounting Systems Financial Capability Questionnaire (to be submitted by applicants who have not previously received Federal funds from the Office of Justice Programs). If appropriate, applicants must complete and submit Standard Form LLL, Disclosure of Lobbying Activities. All applicants must sign Certified Assurances that they are in compliance with Federal laws and regulations which prohibit discrimination in any program or activity that received Federal funds. To obtain appropriate forms or for further information regarding submission of proposals, contact Getha Hilario, BJS Management Assistant, at (202) 633–3031.

Proposals must include both narrative descriptions and a detailed budget. The narrative shall describe activities as discussed in the previous section. The budget shall contain detailed costs of personnel, fringe benefits, travel, equipment, supplies, and other expenses. Contractual services or equipment must be procured through competition or the application must contain a sole source justification for procurements in excess of $100,000.

Project duration is estimated at between 12 and 18 months. Costs are estimated not to exceed $500,000.

Dated: July 2, 1997.

Jan M. Chaiken,

Director, Bureau of Justice Statistics.

[FR Doc. 97–17790 Filed 7–8–97; 8:45 am]

BILLING CODE 4410–18–P

DEPARTMENT OF LABOR

Occupational Safety and Health Administration

[Docket No. ICR–97–37]

Agency Information Collection Activities; Proposed Collection; Comment Request; Mechanical Power Presses (29 CFR 1910.217(e)(1)(i) and 29 CFR 1910.217(e)(1)(ii))—Inspection Certifications

ACTION: Notice.

SUMMARY: The Department of Labor, as part of its continuing effort to reduce paperwork and respondent burden conducts a preclearance consultation program to provide the general public and Federal agencies with an opportunity to comment on proposed and/or continuing collections of information in accordance with the Paperwork Reduction Act of 1995 (PRA 95) (44 U.S.C. 3506(c)(2)(A)). This program helps to ensure that requested data can be provided in the desired format, reporting burden (time and financial resources) is minimized, collection instruments are clearly understood assessed. Currently, the Occupational Safety and Health Administration (OSHA) is soliciting comments concerning the proposed extension of the information collection requirements contained in 29 CFR 1910.217(e)(1)(i) and 29 CFR 1910.217(e)(1)(ii). The Agency is particularly interested in comments which:

- Evaluate whether the proposed collection of information is necessary for the proper performance of the functions of the Agency, including whether the information will have a practical utility;
- Evaluate the accuracy of the Agency's estimate of the burden of the proposed collection of information, including the validity of the methodology and assumption used;
- Enhance the quality, utility, and clarity of the information to be collected; and
- Minimize the burden of the collection of information on those who are to respond, including through the use of appropriate automated, electronic, mechanical, or other technological collection techniques or other forms of information technology, e.g., permitting electronic submissions of responses.

DATES: Written comments must be submitted on or before September 8, 1997.

ADDRESSES: Comments are to be submitted to the Docket Office, Docket No. ICR–97–37, Occupational Safety and Health Administration, U.S. Department of Labor, Room N–2625, 200 Constitution Avenue, NW., Washington, DC 20210. Telephone: (202) 219–7894. Written comments limited to 10 pages or less in length may also be transmitted by facsimile to (202) 219–5046.

FOR FURTHER INFORMATION CONTACT: Belinda Cannon, Directorate of Safety Standards Programs, Occupational Safety and Health Administration, U.S. Department of Labor, Room N–3605, 200 Constitution Avenue, NW., Washington, DC 20210, telephone: (202)

219–8161. Copies of the referenced information collection request are available for inspection and copying in the Docket Office and will be mailed to persons who request copies by telephoning Theda Kenney at (202) 219–8061, ext. 100, or Barbara Bielaski at (202) 219–8076, ext. 142. For electronic copies of the Information Collection Request on the certification requirements for Mechanical Power Preses, contact OSHA's WebPage on the Internet at http://www.osha.gov/and click on ''standards.''

SUPPLEMENTARY INFORMATION:

I. Background

The Occupational Safety and Health Act of 1970 (the Act) authorizes the promulgation of such health and safety standards as are necessary or appropriate to provide safe or healthful employment and places of employment. The statute specifically authorizes information collection by employers as necessary or appropriate for the enforcement of the Act or for developing information regarding the causes and prevention of occupational injuries, illnesses, and accidents.

The inspection certification records required in 29 CFR 1910.217(e)(1)(i) and 29 CFR 1910.217(e)(1)(ii) are necessary to assure compliance with the inspection requirements for mechanical power presses. They are intended to assure that the mechanical power presses have periodic, regular or weekly maintenance checks.

II. Current Actions

This notice requests an extension of the current Office of Management and Budget (OMB) approval of the inspection certification requirements contained in 29 CFR 1910.217(e)(1)(i) and 29 CFR 910.217(e)(1)(ii)—Mechanical Power Presses (currently approved under OMB Control No. 1218–0120).

Type of Review: Extension.

Agency: U.S. Department of Labor, Occupational Safety and Health Administration.

Title: Mechanical Power Presses (29 CFR 1910.217(e)(1)(i) and 29 CFR 1910.217(e)(1)(ii))—Inspection Certifications.

OMB Number: 1218–.

Agency Number: Docket Number ICR–97–37.

Affected Public: State of local governments; Business or other for-profit.

Number of Respondents: 191,750.

Frequency: Monthly; Weekly.

Average Time per Response: 30 minutes (0.50 hour).

Estimated Total Burden Hours: 1,372,945.

Total Annualized Capital/Startup Costs: $0.

Signed at Washington, DC, this 2nd day of July 1997.

John F. Martonik,

Acting Director, Directorate of Safety Standards Programs.

[FR Doc. 97–17934 Filed 7–8–97; 8:45 am]

BILLING CODE 4510–26–M

DEPARTMENT OF LABOR

Occupational Safety and Health Administration

[Docket No. ICR 97–24]

Agency Information Collection Activities; Request for Withdrawal of Approval for Information Collection Activities; Testing of Materials Used in Rollover Protective Structures (ROPS) (29 CFR 1926.1001(e)(3), and (29 CFR 1926.1002(d)(6)—Certification of Materials

ACTION: Withdrawal.

SUMMARY: The Department of Labor, as part of its continuing effort to reduce paperwork and respondent burden, conducts a pre-clearance consultation program to provide the general public and Federal agencies with an opportunity to comment on proposed and/or continuing collections of information in accordance with the Paperwork Reduction Act of 1995 (PRA95) (U.S.C. 3506(c)(2)(A)). This program helps to ensure that requested data can be provided in the desired format, reporting burden (time and financial resources) is minimized, collection instruments are clearly understood, and the impact of collection requirements on respondents can be properly assessed. Currently the Occupational Safety and Health Administration is soliciting comments concerning the proposed withdrawal of the information collection requests for 29 CFR 1926.1001(e)(3), and 29 CFR 1926.1002(d)(6). The latter provision was removed from the CFR on March 6, 1996, when OSHA issued a final rule replacing the provision with a reference to the Society of Automotive Engineers (SAE) consensus standard J334a. The SAE standard does not contain a collection of information (paperwork requirement) .

DATES: Written comments must be submitted on or before September 8, 1997.

ADDRESSES: Comments are to be submitted to the Docket Office, Docket No ICR 97–24, Occupational Safety and Health Administration, U.S. Department of Labor, Room N–2625, 200 Constitution Avenue, NW., Washington, DC 20210, telephone (202) 219–7894. Written comments limited to 10 pages or less in length may also be transmitted by facsimile to (202) 219–5046.

FOR FURTHER INFORMATION CONTACT:

Larry Davey, Directorate of Construction, Occupational Safety and Health Administration, U.S. Department of Labor, Room N–3605, 200 Constitution Avenue, NW., Washington, DC 20210. Telephone: (202) 219–7198. Copies of the referenced information collection request are available for inspection and copying in the Docket Office and will be mailed to persons who request copies by telephoning Yamilet Ramirez at (202) 219–8055 ext. 141. For electronic copies of the Information Collection Request to withdraw on the requirements for certification of materials on 29 CFR 1926.1001(e)(3) contact OSHA's WebPage on Internet at http://www.osha.gov/ and click on standards.

SUPPLEMENTARY INFORMATION:

I. Comments

OSHA requests comments on its determination that the requirements to test materials used in ROPS under 1926.1001(e)(3) and formerly at 1926.1002(d)(6) do not involve a collection of information and; therefore are not subject to approval of OMB under the Paperwork Reduction Act (PRA). The provision at 1926.1002(d)(6) was removed on March 6, 1996, when OSHA issued a final rule which replaced the provision with a reference to the Society of Automotive Engineers (SAE) consensus standard J334a. The SAE standard does not contain a collection of information.

The provisions in question require that the strength of materials used for ROPS be verified by tests or material certification (tested according to a test protocol). However, the provisions do not require any type or record or certificate to be prepared and/or maintained. OSHA originally considered the term ''certification'' as used in these provisions to involve a collection of information subject to PRA. Upon reconsideration, OSHA no longer believes the term ''certification'' as used in these provisions implies a paperwork burden and hence its request to withdraw its paperwork burden estimate. There is no change to the actual requirement to conduct the test as a result of the Agency's determination that no paperwork burden exists.

If commenters disagree with the Agency's determination, and instead believe that a burden does exist, then the Agency is particularly interested in comments which:

- Evaluate whether the proposed collection of information is necessary for the proper performance of the functions of the agency, including whether the information will have practical utility;
- Evaluate the accuracy of the agency's estimate of the burden of the proposed collection of information, including the validity of the methodology and assumptions used;
- Enhance the quality, utility, and clarity of the information to be collected; and
- Minimize the burden of the collection of information on those who are to respond, including through the use of appropriate automated, electronic, mechanical, or other technological collection techniques or other forms of information technology, e.g., permitting electronic submissions of responses.

II. OSHA's Estimate of a Burden

As stated before, OSHA no longer believes that an information collection burden exists for these two provisions. OSHA estimated previously that there are about 10,000 construction sites where scrapers, loaders, dozers, graders, and crawler tractors are in use which have the required ROPS. On average, each site would have 5 pieces of equipment. OSHA previous estimate was that it would take 5 minutes to inspect the materials and to prepare a certification for the ROPS and another 5 minutes to make the certification record available at the time of inspection.

Type of Review: Request for withdrawal of approval.

Agency: U.S. Department of Labor, Occupational Safety and Health Administration.

Title: Testing of Materials Used in rollover protective structures (ROPS) (29 CFR 1926.1001(e)(3), and (29 CFR 1926.1002(d)(6)—Certification of Materials.

Affected Public: Business or other for profit.

Previous Number of Respondents: 10,000.

Revised Number of Respondents: Zero.

Previous Estimated Time Per Response: 10 minutes.

Revised Time of Response: Zero minutes (0:00).

Previous Total Annual Burden Hours: 8333.

Revised Total Annual Burden Hours: Zero.

Total Annualized Capital/Startup Costs: $0.

Signed at Washington, DC, this 2nd day of July 1997.

Russell B. Swanson,

Director, Directorate of Construction.

[FR Doc. 97–17935 Filed 7–8–97; 8:45 am]

BILLING CODE 4510–26–M

NATIONAL ARCHIVES AND RECORDS ADMINISTRATION

Agency Strategic Plan

AGENCY: National Archives and Records Administration.

ACTION: Notice.

SUMMARY: The National Archives and Records Administration (NARA) seeks public comment on the general goals and key indicators developed to support implementation of *Ready Access to Essential Evidence: the Strategic Plan of the National Archives and Records Administration, 1997–2007.*

DATES: Comments should be received no later than July 18, 1997, to ensure greatest consideration, but will be accepted at any time.

ADDRESSES: Send comments to: Debra Leahy, NPOL, Room 4100, National Archives and Records Administration, 8601 Adelphi Road, College Park, MD 20740–6001, or via fax to (301)–713–7270, or via e-mail at: vision@arch2.nara.gov.

FOR FURTHER INFORMATION CONTACT: Debra Leahy, (301) 713–7360, x246.

SUPPLEMENTARY INFORMATION: The goals and indicators are available online at the NARA website at the URL: http://www.nara.gov/nara/vision/strategic__directions.html. They are also available as document number 1026 via FAX through NARA's FAX-ON-DEMAND service at (301) 713–6905.

Dated: July 3, 1997.

John W. Carlin,

Archivist of the United States.

[FR Doc. 97–17997 Filed 7–8–97; 8:45 am]

BILLING CODE 7515–01–P

NATIONAL FOUNDATION ON THE ARTS AND THE HUMANITIES

National Council on the Humanities; Meeting

July 1, 1997.

Pursuant to the provisions of the Federal Advisory Committee Act (Public L. 92–463, as amended) notice is hereby given that a meeting of the National Council on the Humanities will be held in Washington, D.C. on July 17–18, 1997.

The purpose of the meeting is to advise the Chairman of the National Endowment for the Humanities with respect to policies, programs, and procedures for carrying out his functions, and to review applications for financial support and gifts offered to the Endowment and to make recommendations thereon to the Chairman.

The meeting will be held in the Old Post Office Building, 1100 Pennsylvania Avenue, N.W., Washington, D.C. A portion of the morning and afternoon sessions on July 17–18, 1997, will not be open to the public pursuant to subsections (c)(4), (6) and (9)(B) of section 552b of Title 5, United States Code because the Council will consider information that may disclose: trade secrets and commercial or financial information obtained from a person and privileged or confidential; information of a personal nature the disclosure of which will constitute a clearly unwarranted invasion of personal privacy; and information the disclosure of which would significantly frustrate implementation of proposed agency action. I have made this determination under the authority granted me by the Chairman's Delegation of Authority dated July 19, 1993.

The agenda for the sessions on July 17, 1997 will be as follows:

Committee Meetings

(Open to the Public) Policy Discussion

9:00–10:30 a.m.—Research/Education Programs—Room M–07
Public Programs—Room 420
Federal/State Partnership—Room 507
Challenge Grants and Preservation and Access—Room 415

10:30 a.m. until adjourned—(Closed to the Public)—Discussion of specific grant applications before the Council

(Closed to the Public)

1:00–3:00 p.m.—Jefferson Lecture/Humanities Medal Committee—Room 527

Council Discussion Group

(Closed to the Public)

3:00–5:00 p.m.—Council Discussion Group—Room M–07

The morning session on July 18, 1997 will convene at 10:30 a.m. in the 1st Floor Council Room, M–09. The session will be open to the public as set forth below:

Minutes of the Previous Meeting

Reports

A. Introductory Reports

B. Staff Introduction
C. Budget Report
D. Legislative Report/Reauthorization
E. Committee Reports on Policy & General Matters
1. Overview
2. Research and Education Programs
3. Public Programs
4. Federal/State Partnership
5. Preservation and Access and Challenge Grants
6. National Humanities Medal

The remainder of the proposed meeting will be closed to the public for the reasons stated above. Further information about this meeting can be obtained from Ms. Nancy E. Weiss, Advisory Committee Management Officer, Washington, D.C. 20506, or call area code (202) 606–8322, TDD (202) 606–8282. Advance notice of any special needs or accommodations is appreciated.

Michael S. Shapiro,

Acting Advisory Committee Management Officer.

[FR Doc. 97–17907 Filed 7–8–97; 8:45 am]

BILLING CODE 7536–01–M

NUCLEAR REGULATORY COMMISSION

[Docket Nos. 50–266 and 50–301]

Wisconsin Electric Power Company; Point Beach Nuclear Plant; Environmental Assessment and Finding of No Significant Impact

The U.S. Nuclear Regulatory Commission (the Commission) is considering issuance of amendments to Facility Operating License Nos. DPR–24 and DPR–27, issued to Wisconsin Electric Power Company, (the licensee), for operation of the Point Beach Nuclear Plant, Units 1 and 2, located in Manitowoc County, Wisconsin.

Environmental Assessment

Identification of the Proposed Action

The proposed action would revise Technical Specification (TS) 15.3.3, ''Emergency Core Cooling System, Auxiliary Cooling Systems, Air Recirculation Fan Coolers, and Containment Spray,'' to change allowed outage times and increase the number of pumps required to be operable for the service water and component cooling water systems; TS 15.3.7, ''Auxiliary Electrical Systems,'' to reflect service water system operability requirements; TS 15.3.12, ''Control Room Emergency Filtration,'' to increase charcoal filtration efficiencies and include a specific testing standard; and TS 15.5.2, ''Containment,'' to change the design heat removal capability of the containment fan coolers.

The proposed action is in accordance with the licensee's application for amendments dated September 30, 1996 (TSCR–192), as supplemented on November 26 and December 12, 1996, February 13, March 5, April 2, April 16, May 9, June 3, June 13 (two letters), and June 25, 1997.

The Need for the Proposed Action

The proposed action would allow the licensee to maintain the original design basis requirement to maintain service water as a single-phase fluid in the water-filled cooler portion of the containment air recirculation fan coolers and to modify the design and operation of plant systems to accurately reflect system and component capabilities of Units 1 and 2. The proposed action would change the TS to reflect revised design and operating requirements for the emergency core cooling system, auxiliary cooling systems, air recirculation fan coolers, containment spray system, auxiliary electrical systems, and control room emergency filtration system. The revised design and operating requirements include decreasing service water flow to the air recirculation fan coolers to ensure adequate backpressure is maintained in the air recirculation fan coolers to prevent two-phase flow in the coolers; decreasing the containment heat removal capability of the air recirculation fan coolers because of the decrease in service water flow; limiting the source of water supplied for the containment spray pumps to the available volume of water in the refueling water storage tank, recalculating available volume of water in the refueling water storage tank to address instrument inaccuracies; reducing the volume of water assumed in the containment sump at the start of recirculation initiation; increasing the required number of operable service water pumps to six, increasing the required number of operable component cooling water pumps to two per unit; eliminating the one-unit and two-unit conditions for the component cooling water system; modifying the designation of service water loops to define three headers (north, south, and west); revising the limiting conditions for operation of components in the service water system; changing the required actions in case of electrical bus availability to require shutdown of both units; increasing the charcoal filter efficiency based on standardized testing to a minimum of 99 percent methyl iodide removal efficiency, revising the standard for thyroid dose conversion factors; revising the activity limits for the primary and secondary systems; changing the modes of operation of the control room ventilation system; reevaluating components in containment required to be environmentally qualified to revised pressure and temperature limits resulting from a large-break loss-of-coolant accident; and modifying the post-accident sampling system design. Changes resulting from replacing the steam generators for Unit 2 and revising the accident analyses for Units 1 and 2 to incorporate new steam generator setpoints, operating pressures, and instrument inaccuracies were also included in the evaluations to support these amendment applications.

The changes proposed by the proposed amendments provide the appropriate limiting conditions for operation, action statements, allowable outage times, and design specifications for service water, containment cooling, component cooling water, control room ventilation system, and normal and emergency power supplies. This ensures that the safety systems that protect the reactor and containment will operate as required. The design of the reactor and containment are not affected by these proposed changes. The proposed changes resulted in a revised design basis for both units. The revised design basis was appropriately evaluated to ensure that there was not a significant reduction in the margin of safety. The safety systems and limiting conditions for operation for these safety systems that provide support functions will continue to meet the requirements for accident mitigation for Point Beach Nuclear Plant. The revised accident analyses required reevaluation of the radiological consequences. The limiting design-basis accident for dose assessment is the large-break loss-of-coolant accident.

Environmental Impacts of the Proposed Action

Title 10, Code of Federal Regulations, part 100, specifies guidelines for radiation exposure at the exclusion area boundary and the low population zone. The Point Beach Nuclear Plant, Units 1 and 2, were licensed based on not exceeding a total radiation dose to the whole body in excess of 25 rem and a total radiation dose in excess of 300 rem to the thyroid from iodine exposure for an individual located at any point on the exclusion area boundary (EAB) for 2 hours immediately following onset of the postulated fission product release and not exceeding a total radiation dose to the whole body in excess of 25 rem

or a total radiation dose in excess of 300 rem to the thyroid from iodine exposure for an individual located at any point on outer boundary of the low population zone (LPZ) who is exposed to the radioactive cloud resulting from the postulated fission product release (during its entire passage which is conservatively assumed to occur over a 30-day period following the radioactive release). The values given in the original safety evaluation report issued in 1970 listed staff determined values of 4 rem whole body and 240 rem thyroid for an individual located at the EAB for a 2-hour period following an accident and less than 1 rem whole body and 45 rem thyroid for an individual located at any point on the outer boundary of the LPZ. The licensee's evaluation of the dose received to the whole body at both the EAB and LPZ was not significantly changed from the original licensing safety evaluation. The licensee's evaluation of the thyroid dose received by an individual at the EAB based on the proposed changes indicate no increase in dose as compared to the dose presented in the original licensing safety evaluation. The licensee's evaluation of the thyroid dose received by an individual in the LPZ indicates an approximately 5 percent increase in thyroid dose as compared to the dose presented in the original licensing safety evaluation. However, the dose still represents only 20 percent of the reference values specified in 10 CFR Part 100 and the change is not considered a significant increase based on the exceedingly low probability of occurrence of a large-break loss-of-coolant accident and low risk of public exposure to radiation. The licensee concluded that the occupational exposure of the control room operators is within the 30 rem thyroid dose guidelines of 10 CFR Part 50, Appendix A, General Design Criterion 19, based on the use of potassium iodide tablets. The reliance on potassium iodide tablets was previously approved in the safety evaluation for closure of NUREG–0737, Item III.D.3.4, ''Control Room Habitability.'' The calculated thyroid dose was previously 23.7 rem and the revised dose is 29.3 rem. The revised dose is still within GDC 19 dose limits. Thus the thyroid dose to control room operators is not considered significant. The licensee has provided commitments to upgrade the design, operation, and analyses to achieve a control room operator thyroid dose based on specific occupancy factors without reliance on potassium iodide. The licensee's changes in dose values are primarily the result of changes in assumptions, methodology, and calculational techniques.

The Commission has completed its evaluation of the proposed action and concludes that the proposed amendments will not increase the probability or consequences of accidents, no changes are being made in the types of any effluents that may be released offsite, and there is no significant increase in the allowable individual or cumulative occupational radiation exposure. Accordingly, the Commission concludes that there are no significant radiological environmental impacts associated with the proposed action.

With regard to potential nonradiological impacts, the proposed action does involve features located entirely within the restricted area as defined in 10 CFR part 20. It does not affect nonradiological plant effluents and has no other environmental impact. Accordingly, the Commission concludes that there are no significant nonradiological environmental impacts associated with the proposed action.

Alternatives to the Proposed Action

Since the Commission has concluded there is no measurable environmental impact associated with the proposed action, any alternatives with equal or greater environmental impact need not be evaluated. As an alternative to the proposed action, the staff considered denial of the proposed action. Denial of the application would result in no change in current environmental impacts. The environmental impacts of the proposed action and the alternative action are similar.

Alternative Use of Resources

This action does not involve the use of any resources not previously considered in the Final Environmental Statement for the Point Beach Nuclear Plant, Units 1 and 2.

Agencies and Persons Consulted

In accordance with its stated policy, on July 2, 1997, the staff consulted with the Wisconsin State official, Jeff Kitzenbuel, of the Wisconsin Public Service Commission regarding the environmental impact of the proposed action. The State official had no comments.

Finding of No Significant Impact

Based upon the environmental assessment, the Commission concludes that the proposed action will not have a significant effect on the quality of the human environment. Accordingly, the Commission has determined not to prepare an environmental impact statement for the proposed action.

For further details with respect to the proposed action, see the licensee's letter dated September 30, 1996, as supplemented on November 26 and December 12, 1996, February 13, March 5, April 2, April 16, May 9, June 3, June 13 (two), and June 25, 1997, which are available for public inspection at the Commission's Public Document Room, The Gelman Building, 2120 L Street, NW., Washington, DC, and at the local public document room located at The Lester Public Library, 1001 Adams Street, Two Rivers, WI 54241.

Dated at Rockville, Maryland, this 2nd day of July 1997.

For the Nuclear Regulatory Commission.

Linda L. Gundrum,

Project Manager, Project Directorate III–1, Division of Reactor Projects—III/IV, Office of Nuclear Reactor Regulation.

[FR Doc. 97–17990 Filed 7–3–97; 4:20 pm]

BILLING CODE 7590–01–P

NUCLEAR REGULATORY COMMISSION

Sunshine Act Meeting

AGENCY HOLDING THE MEETING: Nuclear Regulatory Commission.

DATE: Weeks of July 7, 14, 21, and 28, 1997.

PLACE: Commissioners' Conference Room, 11555 Rockville Pike, Rockville, Maryland.

STATUS: Public and Closed.

MATTERS TO BE CONSIDERED:

Week of July 7

There are no meetings scheduled for the week of July 7.

Week of July 14—Tentative

Thursday, July 17

4:00 p.m.
Affirmation Session (Public Meeting) (if needed)

Friday, July 18

10:30 a.m.
Meeting with NRC Executive Council (Public Meeting) (Contact: James L. Blaha, 301–415–1703)

Week of July 21—Tentative

There are no meetings scheduled for the week of July 21.

Week of July 28—Tentative

There are no meetings scheduled for the week of July 28.

The schedule for Commission meetings is subject to change on short notice. To verify the status of meetings

call (recording)—(301) 415–1292. Contact person for more information: Bill Hill, (301) 415–1661.

Additional Information

By a vote of 5–0 on June 27 and June 30, the Commission determined pursuant to U.S.C 552b(e) and 10 CFR Sec. 9.107(a) of the Commission's rules that ''Affirmation of Louisiana Energy Services Petitions for Review of LBP–97–8 (May 1, 1997)'' be held on June 30, and on less than one week's notice to the public.

* * * * *

The NRC Commission Meeting Schedule can be found on the Internet at: http://www.nrc.gov/SECY/smj/schedule.htm

This notice is distributed by mail to several hundred subscribers; if you no longer wish to receive it, or would like to be added to it, please contact the Office of the Secretary, Attn: Operations Branch, Washington, D.C. 20555 (301–415–1661).

In addition, distribution of this meeting notice over the internet system is available. If you are interested in receiving this Commission meeting schedule electronically, please send an electronic message to wmh@nrc.gov or dkw@nrc.gov.

* * * * *

Dated: July 3, 1997.

William M. Hill, Jr.,

SECY Tracking Officer, Office of the Secretary.

[FR Doc. 97–18074 Filed 7–7–97; 10:55 am]

BILLING CODE 7590–01–M

SECURITIES AND EXCHANGE COMMISSION

[Release No. 34–38805; File No. SR–CBOE–97–19]

Self-Regulatory Organizations; Order Approving Proposed Rule Change and Notice of Filing and Order Granting Accelerated Approval of Amendment No. 2 of the Chicago Board Options Exchange, Incorporated; Amending the Minor Rule Violation Plan With Respect to Position Limit Fines

July 1, 1997.

On May 8, 1997, the Chicago Board Options Exchange, Incorporated (''CBOE'' or ''Exchange'') filed with the Securities and Exchange Commission (''Commission'') pursuant to Section 19(b)(1) of the Securities Exchange Act of 1934 (''Act'')[1] a proposed rule change to revise the position limit summary fine schedule applied to CBOE members.[2] Notice of the proposed rule change, together with the substance of the proposal, was published in the **Federal Register**.[3] No comment letters were received. The Exchange subsequently filed Amendment No. 2 to the proposal on June 12, 1997.[4] This order approves the proposed rule change, as amended.

I. Background

The proposed rule change will revise the position limit summary fine schedule in subsection (g)(1)(b) of Exchange Rule 17.50, the CBOE's minor rule violation plan, for violations in member accounts and other accounts that do not qualify as non-member customer accounts under subsection (g)(1)(a) of Exchange Rule 17.50. The proposed rule change also will revise Interpretation and Policy .01 to Rule 17.50 to conform the proposed amendment to the fine schedule. The revisions result from an Exchange review of existing position limit sanction levels at other exchanges to ensure comparative equality of sanction levels between option exchanges and to ensure that sanction levels appropriately fit the violative behavior.[5]

In addition, the proposed rule change will redefine CBOE's fining method for member position limit summary fines in Rule 17.50(g)(1)(b) so that, for the first three violations within any rolling 12 month period, CBOE will treat a member with two consecutive trade dates of position limit overage in the same manner as a member with a single trade date overage. For the fourth and succeeding violations in any twelve month period, CBOE will treat a two consecutive trade date occurrence as two separate violations. The Exchange Staff will continue to issue non-disciplinary letters of caution for the first three member violations in lieu of a fine, so long as the overage does not exceed 5% of the applicable limit. The proposed rule change also will allow Exchange staff, in its discretion, for the third violation, to meet with the member during a non-disciplinary staff interview, in lieu of issuing a letter of caution.

The Exchange will continue to impose a $1.00 per contract position limit summary fine for the first through third member position limit violations when the overage exceeds 5% of the applicable limit and the fourth through sixth member position limit violations. However, the proposed rule change will establish fine levels of $2.50 per contract for the seventh through ninth position limit violations and $5.00 per contract for the tenth and succeeding violations. By creating another fining tier between the $1.00 and $5.00 per contract levels, the Exchange will utilize a more graduated calculation of position limit summary fines.

Finally, CBOE proposed to change to a rolling 12 month period of review, rather than a calendar year, for multiple position limit violations occurring in both member and non-member accounts in subsections (g)(1) (a) and (b) of Exchange Rule 17.50 to implement a 1996 recommendation by the Commission's Office of Compliance Inspections and Examinations.

II. Discussion

The Commission finds that the proposed rule change is consistent with Section 6 of the Act in general, and in particular, with Section 6(b)(7) because it provides a fair procedure for the disciplining of members and persons associated with members in that the revisions to the fining method for member violations will deter multiple violations and will improve the minor rule violation plan process, while resulting in position limit summary fines that are in proportion to other fines imposed by the CBOE for comparable rule violations. The Commission believes that the proposed role change provides a fair procedure for

[1] 15 U.S.C. § 78s(b)(1) (1988).

[2] The proposed rule change was originally filed on March 28, 1997. The CBOE submitted Amendment No. 1 to the proposed rule change to revise the review period applied to multiple position limit violations occurring in member accounts under CBOE Rule 17.50(g)(1)(b) to a rolling 12 month review period, instead of a calendar year review period. The CBOE has requested that the rolling 12 month review period not become effective until three months after SR–CBOE–97–19 is approved so that CBOE members who may be affected by the change will have a notice period prior to the revision. Letter from Margaret G. Abrams, Senior Attorney, CBOE, to Katherine England, Esq., Assistant Director, Division of Market Regulation—Office of Market Supervision, dated May 8, 1997.

[3] Securities Exchange Act Release No. 38619 (May 13, 1997), 62 FR 27283 (May 19, 1997).

[4] Amendment No. 2 will revise the review period for multiple position limit violations occurring in the accounts of non-member customers under CBOE Rule 17.50(g)(1)(a) to a rolling twelve month review period, instead of a calendar year review period. The CBOE also has requested that the rolling year review period in Amendment No. 2 not become effective until three months after SR–CBOE–97–19 is approved so that CBOE members who may be affected by the change will have a notice period prior to the revision. Letter from Margaret G. Abrams, Senior Attorney, CBOE, to Katherine England, Esq., Assistant Director, Division of Market Regulation—Office of Market Supervision, dated June 12, 1997.

[5] A subgroup was formed by the Exchange's Business Conduct Committee (''BCC'') to review position limit sanctions. The subgroup included the BCC chairman, vice chairman, another BCC member, a member firm representative, and five other Exchange committee chairmen. The subgroup met during September through November 1996. The subgroup's recommendations were approved by the full BCC in November 1996, and by the Exchange's Board of Directors in December 1996.

the disciplining of members and persons associated with members in that it is appropriate to treat two consecutive trade dates of position limit overage in the same manner as a member with a single trade date overage for the first three violations. A member with a two consecutive trade date overage may unintentionally violate the position limit on the first trade date and, upon becoming aware of the overage, begin to take action to reduce the position. Market conditions and the size of the overage may then prevent the member from reducing the overage until the end of the second trade date. During the initial three violations, issuing letters of caution or conducting a staff interview should educate a member to avoid future violations. Thus, the Commission believes that treating two consecutive trade date occurrences as one violation is not warranted for the fourth and succeeding violations.

The Commission also believes that using a more graduated scale for calculation of multiple position limit summary fines may effectively deter multiple violations. By creating a fining level of $2.50 per contract between the $1.00 per contract fining level and the $5.00 per contract fining level, the proposed rule change will deter multiple position limit violations though the use of increasingly higher fines.

The Commission also finds that using a rolling 12 month period of review, rather than a calendar year, for multiple position limit violations occurring in member and non-member accounts will deter repeat violations. Using the rolling 12 month period to calculate position limit violations will prevent a firm from repeating multiple position limit violations at the end of a calendar year and continuing its position limit violations through the beginning of the succeeding calendar year without incurring a fine.

The Commission finds good cause for approving Amendment No. 2 to the proposed rule change prior to the thirtieth day after the date of publication of notice of the filing of the proposed rule change in the **Federal Register** to allow the Exchange to review multiple position limit violations occurring in non-member accounts under CBOE Rule 17.50(g)(1)(a) using the same rolling 12 month period used for violations occurring in member accounts under CBOE Rule 17.50(g)(1)(b), without further delay.

The Commission also believes that Amendment No. 2 does not raise any significant new issues that require public notice prior to approval because Amendment No. 2 only changes the Exchange's review period of multiple position limit violations occurring in non-member accounts to the same rolling 12 month period used for violations occurring in member accounts and no comments were received on the substance of the original proposal. The Commission also believes that delaying for three months after the approval date of SR–CBOE–97–19 the change to the rolling 12 month review period for multiple position limit violations will ensure that any CBOE members have adequate notice prior to the change from a calendar year to a rolling 12 month period. Accordingly, the Commission believes it is consistent with Section 6 of the Act to approve Amendment No. 2 to the proposed rule change on an accelerated basis.

Interested persons are invited to submit written data, views and arguments concerning Amendment No. 2. Persons making written submissions should file six copies thereof with the Secretary, Securities and Exchange Commission, 450 Fifth Street, NW., Washington, DC 20549. Copies of the submission, all subsequent amendments, all written statements with respect to the proposed rule change that are filed with the Commission, and all written communications relating to the proposed rule change between the Commission and any person, other than those that may be withheld from the public in accordance with the provisions of 5 U.S.C. § 552, will be available for inspection and copying in the Commission's Public Reference Room. Copies of such filing will also be available for inspection and copying at the principal office of the CBOE. All submissions should refer to File No. SR–CBOE–97–19 and should be submitted by July 30, 1997.

It is therefore Ordered, pursuant to Section 19(b)(2) of the Act, that the proposed rule change, SR–CBOE–97–19, be, and hereby is, approved.

For the Commission, by the Division of Market Regulation, pursuant to delegated authority.[6]

Margaret H. McFarland,

Deputy Secretary.

[FR Doc. 97–17940 Filed 7–8–97; 8:45 am]

BILLING CODE 8010–01–M

[6] 17 CFR 200.30–3(a)(12).

SECURITIES AND EXCHANGE COMMISSION

[Release No. 34–38804; File No. SR–NASD–97–46]

Self-Regulatory Organizations; Notice of Filing and Order Granting Accelerated Approval of Proposed Rule Change by the National Association of Securities Dealers, Inc. Relating to an Extension of the Effectiveness of the NASD's Excess Spread Rule Until September 30, 1997

July 1, 1997.

Pursuant to Section 19(b)(1) of the Securities Exchange Act of 1934 (''Exchange Act''), 15 U.S.C. 78s(b)(1), notice is hereby given that on July 1, 1997, the National Association of Securities Dealers, Inc. (''NASD'' or ''Association'') filed with the Securities and Exchange Commission (''Commission'' or ''SEC'') the proposed rule change as described in Items I, II, and III below, which Items have been prepared by the NASD. The Commission is publishing this notice to solicit comments on the proposed rule change from interested persons and is approving the proposal on an accelerated basis.

I. Self-Regulatory Organization's Statement of the Terms of Substance of the Proposed Rule Change

The NASD proposes to amend NASD Rule 4613(d) to extend the effectiveness of its current excess spread rule applicable to Nasdaq National Market (''NNM'') securities through September 30, 1997. The excess spread rule applicable to NNM securities provides that a registered market maker in a security listed on The Nasdaq Stock Market (''Nasdaq'') shall be precluded from being a registered market maker in that issue for twenty (20) business days if its average spread in the security over the course of any full calendar month exceeds 150 percent of the average of all dealer spreads in such issue for the month. The text of the proposed rule change is as follows. (Additions are italicized; deletions are bracketed.)

* * * * *

NASD Rule 4613 Character of Quotations

* * * * *

(d) Reasonably Competitive Quotations

A registered market maker in a Nasdaq National Market security will be withdrawn as a registered market maker and precluded from re-registering as a market maker in such issue for 20 business days if its average spread in the security over the course of any full

calendar month exceeds 150 percent of the average of all dealer spreads in such issue for the month. This subparagraph shall not apply to market makers in Nasdaq SmallCap securities.

(1) If a registered market maker has not satisfied the average spread requirement set forth in this subparagraph (d) for a particular Nasdaq National Market security, its registration in such issue shall be withdrawn commencing on the next business day following the business day on which the market maker was sent notice of its failure to comply with the requirement. A market maker may request reconsideration of the withdrawal notification. Requests for reconsideration will be reviewed by the Market Operations Review Committee, whose decisions are final and binding on the members. A request for reconsideration shall not operate as a stay of the withdrawal or toll the twenty business day period noted in subparagraph (d) above.

(2) Grounds for requests for reconsideration shall be limited to claims that Nadsaq's calculation of the market maker's average spread for the month was in error.

(3) This subparagraph (d) shall be in effect until *September 30, 1997* [July 1, 1997].

II. Self-Regulatory Organization's Statement of the Purpose of, and Statutory Basis for, the Proposed Rule Change

In its filing with the Commission, the NASD included statements concerning the purpose of and basis for the proposed rule change and discussed any comments it received on the proposed rule change. The text of these statements may be examined at the places specified in Item IV below. The NASD has prepared summaries, set forth in Sections A, B, and C below, of the most significant aspects of such statements.

A. Self-Regulatory Organization's Statement of the Purpose of, and Statutory Basis for, the Proposed Rule Change

Prior to January 20, 1997, Nasdaq's Excess Spread Rule provided that registered market makers in Nasdaq securities could not enter quotations that exceeded 125 percent of the average of the three narrowest market maker spreads in that issue, provided, however, that the maximum allowable spread could never be less than ¼ of a point (''125% Excess Spread Rule''). The Rule was originally designed to bring a measure of quality to the Nasdaq market by preventing firms from holding themselves out as market makers without having a meaningful quote in the system. Despite the regulatory objectives underlying the rule, however, many market participants believed the rule produced a variety of unintended consequences that undermined the integrity of Nasdaq. Most notably, the SEC found in its 21(a) Report on the NASD and Nasdaq that ''the interdependence of quotes mandated by the rule may deter market makers from narrowing their dealer spreads, because, once the spread is tightened, the rule in some instances precludes a market maker from widening the spread to earlier levels.[1] As a result the SEC found that the Excess Spread Rule created an economic incentive for market makers to discourage one another from narrowing their quotes, thereby interfering with the ''free flow of prices in the market and imped[ing] attempts by the market to reach the optimal competitive spread.'' [2] Accordingly, the SEC requested that the NASD ''modify the rule to eliminate its undesirable effects, or to repeal it.'' [3]

In response to the SEC's 21(a) Report, the NASD submitted a proposal that was approved by the SEC that amended the Excess Spread Rule on a pilot basis through July 1, 1997.[4] Under the revised Excess Spread Rule, a registered market maker in a Nasdaq security is precluded from being a registered market maker in that issue for twenty business days if its average spread in the security over the course of any full calendar month exceeded 150 percent of the average of all dealer spreads in such issue for the month (''150% Excess Spread Rule'').[5]

In formulating the 150% Excess Spread Rule, Nasdaq Committees and Nasdaq staff felt that it was important to strike a reasonable balance between the need to eliminate any constraints that the Excess Spread Rule places on firms to adjust their quotations and the need to avoid fostering a market environment where registered market makers can maintain inordinately wide spreads and still receive the benefits of being a market maker (*e.g.*, affirmative determination exemption and preferential margin treatment). Nasdaq also believed it was critical to transform the Excess Spread Rule into a performance standard used to determine market maker eligibility, instead of a strict regulatory requirement applicable to every quote update in a Nasdaq security, violations of which were punishable by disciplinary action. In addition, Nasdaq believed it was important to eliminate the 125% Excess Spread Rule prior to implementation of the SEC's order handling rules. Specifically, because Nasdaq believed that spreads would likely narrow as a result of the display of customer limit orders, Nasdaq believed that the average of the three narrowest market maker spreads would commensurately narrow after implementation of the SEC's rules. As a result, Nasdaq believed that concerns with the interdependence of market maker quotations would be exacerbated unless the rule was amended.

While the Commission approved the 150% Excess Spread Rule on a pilot basis, in its approval order for the new rule, the SEC states that ''[a]lthough the amended excess spread rule may reduce some of the anticompetitive concerns outlined in the 21(a) Report, the Commission believes that the amendment * * * may not completely satisfy the NASD's obligations under the Commission's Order with regard to the excess spread rule. Specifically, it may not remove completely the anticompetitive incentives for market makers to refrain from narrowing quotes because the market makers' quotation obligation continues to be dependent to some extent upon quotations of other market makers in the stock.'' [6]

Based on experience with the 150% Excess Spread Rule, the Nasdaq Board recently concluded that the Rule has helped to ensure that market makers maintain at least a minimal level of commitment to their issues, without contributing to or fostering the same unintended consequences created by the former 125% Excess Spread Rule.

---

[1] *See* Appendix to Report Pursuant to Section 21(a) of the Securities Exchange Act of 1934 Regarding the NASD and The Nasdaq Stock Market (''21(a) Report''), SEC, August 8, 1996, at p. 98.

[2] *Id.* at p. 99.

[3] *Id.*

[4] *See* Securities Exchange Act Release No. 38180 (January 16, 1997), 62 FR 3725 (''Pilot Program Approval Order'').

[5] On February 28, 1997, the SEC approved the NASD's proposal to exclude Nasdaq Small-Cap Securities from the Excess Spread Rule. This rule change was necessary because, unlike with Nasdaq National Market securities, Nasdaq does not presently calculate and display through the Nasdaq system the average spread of all market makers in a particular issue or a comparison of the size of an individual market maker's quoted spread relative to the average spread of all market makers. Thus, Nasdaq does not presently afford market makers in SmallCap securities with any indication as to whether they are satisfying the requirements of the 150% Excess Spread Rule. Market makers in Nasdaq National Market securities are able to assess whether they are satisfying the 150% Excess Spread Rule on a daily basis through use of the ''Primary Market Maker (PMM) Window'' of Nasdaq Workstation II. Under the NASD's instant proposal, Nasdaq SmallCap securities would continue to be excluded from the Excess Spread Rule. *See* Securities Exchange Act Release No. 38354 (February 28, 1997), 62 FR 11245.

[6] Pilot Program Approval Order, *supra* note 4, 62 FR at 3726.

Accordingly, the Nasdaq Board approved a resolution to implement the 150% Excess Spread Rule for all Nasdaq securities on a permanent basis. On June 26, 1997, the Board of Governors of the NASD ratified the resolution adopted by the Nasdaq Board. The NASD's filing requesting permanent approval of the 150% Excess Spread Rule will be submitted to the Commission in the very near future. Accordingly, in the interim before the Commission has had an opportunity to solicit comment and take action on the NASD's proposal for permanent approval of the Rule, the NASD is proposing that the pilot program for the Rule be extended until September 30, 1997.

Nasdaq and the NASD believes that the proposed rule change is consistent with Sections 15A(b)(6), 15A(b)(9), 15A(b)(11) and 11A(a)(1)(C) of the Exchange Act. Among other things, Section 15A(b)(6) requires that the rules of a national securities association be designed to prevent fraudulent and manipulative acts and practices, to promote just and equitable principles of trade, to foster cooperation and coordination with persons engaged in regulating, clearing, settling, processing information with respect to, and facilitating transactions in securities, to remove impediments to and perfect the mechanism of a free and open market and a national market system and in general to protect investors and the public interest. Section 15A(b0(9) provides that the rules of the Association may not impose any burden on competition not necessary or appropriate in furtherance of the purposes of the Exchange Act. Section 15A(b)(11) empowers the NASD to adopt rules governing the form and content of quotations relating to securities in the Nasdaq market. Such rules must be designed to produce fair and informative quotations, prevent fictitious and misleading quotations, and promote orderly procedures for collecting and distributing quotations. Section 11A(a)(1)(C) provides that it is in the public interest to, among other things, assure the economically efficient execution of securities transactions and the availability to brokers, dealers, and investors of information with respect to quotations for and transactions in securities. Specifically, because Nasdaq and the NASD believe the 150% Excess Spread Rule has helped to ameliorate the adverse consequences that the former 125% Excess Spread Rule had on the competitiveness and independence of quotations displayed on the Nasdaq market, Nasdaq and the NASD believe the proposal to extend the pilot program for the Rule for an additional three months is consistent with the Exchange Act. In particular, Nasdaq and the NASD believe that the 150% Excess Spread Rule promotes the integrity of quotations on the Nasdaq market and enhances competition among market makers, thereby contributing to greater market liquidity, improved price discovery, and the best execution of customer orders. At the same time, while Nasdaq and the NASD believe the 150% Excess Spread Rule has removed a constraint on market maker quote movements, Nasdaq and the NASD also believe that the Rule has helped to ensure that all registered market makers are providing some threshold level of market making support in their issues. Nasdaq and the NASD also believe that the 150% Excess Spread Rule has helped to avoid fostering a market environment where registered market makers can maintain inordinately wide spreads and still receive the benefits of being a market maker. Accordingly, the NASD and Nasdaq believe that it would be consistent with all of the above-cited sections of the Act for the Commission to approve an extension of the effectiveness of the 150% Excess Spread Rule for an additional three months while the Commission considers permanent approval of the Rule.

B. Self-Regulatory Organization's Statement on Burden on Competition

The NASD believes that the proposed rule change will not result in any burden on competition that is not necessary or appropriate in furtherance of the purposes of the Exchange Act.

C. Self-Regulatory Organization's Statement on Comments on the Proposed Rule Change Received From Members, Participants, or Others

Comments were neither solicited nor received.

III. Solicitation of Comments

Interested persons are invited to submit written data, views, and arguments concerning the foregoing. Persons making written submissions should file six copies thereof with the Secretary, Securities and Exchange Commission, 450 Fifth Street, N.W., Washington, D.C. 20549. Copies of the submission, all subsequent amendments, all written statements with respect to the proposed rule change that are filed with the Commission, and all written communications relating to the proposed rule change between the Commission and any person, other than those that may be withheld from the public in accordance with the provisions of 5 U.S.C. 552, will be available for inspection and copying in the Commission's Public Reference Room. Copies of such filing will also be available for inspection and copying at the principal office of the NASD. All submissions should refer to file number SR–NASD–97–46 and should be submitted by July 30, 1997.

IV. Commission's Findings and Order Granting Accelerated Approval of Proposed Rule Change

The Commission has determined to approve the extension of the 150% Excess Spread Rule pilot until September 30, 1997. As noted previously, the Commission had identified anticompetitive concerns associated with the 125% Excess spread Rule in place prior to January 20, 1997. The NASD has an obligation, pursuant to the 21(a) Report, to eliminate these concerns on or before August 8, 1997. The Commission, in the Pilot Program Approval Order, recognized that the 150% Excess Spread Rule may reduce, to some degree, the Commission's concerns regarding the 125% Excess Spread Rule. Although the Commission has not yet considered whether the 150% Excess Spread Rule is sufficient to satisfy the NASD's obligations under the Commission's Order on a permanent basis, the Commission believes that the current rule should continue to operate on a temporary basis while the issue is examined.[7] Consequently, an extension will ensure that the Rule remains in effect on an uninterrupted basis until the Commission has had an opportunity to fully evaluate the NASD's permanent solution regarding the excess spread rule.[8]

In addition, the Commission believes that the temporary rule can remain limited to National Market securities. Due to Nasdaq's current systems limitations, market makers in Nasdaq SmallCap securities are unable to monitor compliance with the Rule. However, the NASD has stated that it anticipates that market makers in Nasdaq SmallCap securities will be subject to the same excess spread requirements, if any, as market makers in Nasdaq National Market securities when a permanent resolution is reach.

Accordingly, the Commission finds that the NASD's proposal is consistent with Sections 11A and 15A of the Exchange Act and the rules and regulations thereunder applicable to the

[7] As mentioned in the Pilot Program Approval Order, one of the alternatives for a permanent solution could be elimination of the excess spread rule in its entirety.

[8] As noted above, the NASD has until August 8, 1997, to comply with this undertaking.

NASD and, in particular, Sections 11A(a)(1)(C), 15A(b)(6), 15A(b)(9), and 15A(b)(11). Further, the Commission finds good cause for approving the proposed rule change prior to the thirtieth day after the day of publication in the **Federal Register**. In addition to the reasons discussed above, the Commission believes that accelerated approval of the NASD's proposal is appropriate given the fact that the proposal is a temporary extension of the 150% Excess Spread Rule that has been in effect since January 1997. An uninterrupted application of the 150% Excess Spread Rule for a short period of time should be less disruptive to market makers while the NASD prepares its proposal regarding market maker standards.[9]

V. Conclusion

It is therefore ordered, pursuant to Section 19(b)(2) of the Exchange Act, that the proposed rule change (SR–NASD–97–46) is approved through September 30, 1997.

For the Commission, by the Division of Market Regulation, pursuant to delegated authority.[10]

Margaret H. McFarland,

Deputy Secretary.

[FR Doc. 97–17938 Filed 7–8–97; 8:45 am]

BILLING CODE 8010–01–M

[9] The Commission notes that a failure to extend the 150% Excess Spread Rule would result in no excess spread standard for Nasdaq market makers. Without deciding that the 150% Excess Spread Rule is preferable to no excess spread standard, the Commission concludes that it is not unreasonable to continue the pilot uninterrupted for a short period to allow the Commission to reach a conclusion on this matter.

[10] 17 CFR 200.30–3(a)(12).

SECURITIES AND EXCHANGE COMMISSION

[Release No. 34–38807; File No. SR–NASD–97–40]

Self-Regulatory Organizations; Notice of Filing and Immediate Effectiveness of Proposed Rule Change by the National Association of Securities Dealers, Incorporated Amending the Surcharge on Members Named as Respondents in Arbitration Proceedings

July 1, 1997.

Pursuant to Section 19(b)(1) of the Securities Exchange Act of 1934 (''Act''), 15 U.S.C. 78s(b)(1), notice is hereby given that on June 13, 1997, the National Association of Securities Dealers, Incorporated (''NASD'' or ''Association'') filed with the Securities and Exchange Commission (''Commission'') the proposed rule change as described in Items I, II, and III below, which Items have been prepared by the self-regulatory organization. The Commission is publishing this notice to solicit comments on the proposed rule change from interested persons.

I. Self-Regulatory Organization's Statement of the Terms of Substance of the Proposed Rule Change

NASD Regulation is proposing to amend Rule 10333 of the NASD's Code of Arbitration Procedure (''Code'') to increase the member surcharge on arbitration matters and to further graduate the rate of member surcharges to reflect more closely the costs associated with resolving controversies involving varying amounts in dispute.

II. Self-Regulatory Organization's Statement of the Purpose of, and Statutory Basis for, the Proposed Rule Change

In its filing with the Commission, the self-regulatory organization included statements concerning the purpose of and basis for the proposed rule change and discussed any comments it received on the proposed rule change. The text of these statements may be examined at the places specified in Item IV below. The self-regulatory organization has prepared summaries, set forth in Sections A, B, and C below, of the most significant aspects of such statements.

A. Self-Regulatory Organization's Statement of the Purpose of, and Statutory Basis for, the Proposed Rule Change

1. Purpose

Background and Introduction

In January 1996, the NASD's Arbitration Policy Task Force (''Task Force'') released its report on Securities Arbitration Reform. The Task Force's report made numerous recommendations to improve the arbitration process. Some of the recommendations, such as early appointment of arbitrators and selection of arbitrators by a list selection method, involve significant changes in the way NASD Regulation's Office of Dispute Resolution (''Office'') administers arbitration cases and their implementation will result in significant increases in cost. Other recommendations, including increased arbitrator compensation, also involve significant increases in cost.

Since the report was released, NASD Regulation has been engaged in a major effort to implement the numerous Task Force recommendations. In addition, the Office has other initiatives underway to improve the arbitration process, such as improving case processing and administration by, among other things, upgrading its computerized case tracking system and hiring additional staff. Finally, the growth rate in NASD Regulation's arbitration case load over the last ten years, and the increasing length and complexity of arbitration cases, are generating additional cost pressures on the Office in its continuing efforts to meet the needs of users of the dispute resolution service.[1]

Operating Costs. The Office's arbitration service has never been self-funding. The revenues generated from filing and hearing session fees and, more recently, the member surcharge, have never covered more than approximately 70 percent of the arbitration service's operating costs. Originally a voluntary program that handled a few hundred cases each year, the arbitration service now handles more than 6,000 cases annually. Since its inception, the NASD has subsidized a large portion of the cost out of revenue obtained from members through the general assessment on member income. As the number of cases has grown and the cost and complexity of arbitration proceedings have increased, NASD Regulation has sought to increase the fees charged to the users of the service and to reduce the general assessment subsidy in order to shift the costs of the program to the service users.

Among its recent initiatives, the Office also has begun to appoint arbitrators earlier in the process, one of the Task Force's recommendations. In addition, list selection of arbitrators will be implemented in 1998 (subject to SEC approval), and updating the Office's arbitration case tracking system is in progress. The costs of these initiatives and others are increasing operating expenses significantly. For example, in 1996, the costs of the dispute resolution program exceeded revenue by $11.3 million. The revenue shortfall is expected to reach $20.0 million in 1997, a 77 percent increase. After incorporating planned increases in arbitrator compensation, the revenue shortfall is projected to be $25.0 million in 1998, a 121 percent increase over 1996.[2]

[1] The number of cases filed with NASD Regulation's Office of Dispute Resolution in the first three months of 1997 is up 15 percent over the same period in 1996. The number of cases filed has risen from 2,886 in 1987 to an estimated 6,356 for 1997 based on the number filed in the first three months, a 120 percent increase.

[2] *See* Exhibit 2 to the rule filing.

Development of Proposed Fee Increases

As a result of the continuing growth of the program and the operating losses, NASD Regulation determined that changes to the funding mechanisms were necessary. In order to ensure that the changes were appropriate to the goals of the program and fair to its users, NASD Regulation established guidelines for fee increases and analyzed the program to identify the cost of each service.[3] In addition, to support a shift in the source of member financial support from general assessment revenue to user fees, NASD Regulation identified the member users of the program.

Guidelines for Proposed Fee Increases. In developing the proposed rule change, NASD Regulation identified several important principles to guide its decisions on the appropriate fees for the arbitration service it provides:

- The current ratio of public investor fees to member fees should remain the same. Currently public investors pay approximately 26 percent of the arbitration service fees and members pay 74 percent.
- The fees should not create a financial barrier to prevent a public investor from seeking arbitration. The maximum fee charged to public investors should not exceed the direct costs of providing the service.
- The cost for a public investor to file a case in arbitration (the filing fee plus hearing session deposit fee) should not exceed the cost to the member named in the arbitration (the member surcharge).

The revenue contribution plan should, to the extent possible, impose costs on member firms and associated persons who use the program.

- Any fee increases should be allocated to reducing the revenue shortfall for the arbitration service alone. Additional fee increases to cover revenue shortfalls for other dispute resolution programs and indirect operating costs may be developed in the future.

Member-Users of Dispute Resolution Services. In addition, 1996 case volume was analyzed to obtain a profile of the users of arbitration services and to project the impact of future fee changes upon member firms. This analysis revealed that only 753 firms (14 percent) out of approximately 5,500 NASD member firms used arbitration services. Of these 753 firms, 88 firms (12 percent) accounted for over 50 percent of the case volume. Each of these 88 firms reported revenues in excess of $100 million on their FOCUS filings. In contrast, firms that reported revenues of less than $500,000 accounted for only 9 percent of NASD member firms and represented less than 3 percent of the total projected case load. Thus, a small number of large firms are involved in more than 50 percent of all arbitration cases. NASD Regulation considers these firms to be the primary and most frequent member users of the service and, therefore, believes it is appropriate for any fee changes to shift member costs from general revenues to these member users. The proposed rule changes, including the changes to the member surcharge proposed in another rule filing, accomplish this goal.

General Description of Proposed Fee Increases

In view of the foregoing, and in conjunction with proposed increases in filing fees and hearing session deposits as set forth in a separate rule filing,[4] NASD Regulation is proposing to amend the surcharge assessed on members who are named as respondents in arbitration proceedings[5] to fund implementation of the Task Force's recommendations and other initiatives to improve the arbitration services administered by the Office. The changes, taken together, will maintain the current ratio of funding of the arbitration services between customers and members while limiting the increases in filing fees and hearing deposits for customers. This will continue to encourage the use of the arbitration service while limiting the cost to the users of the program to an amount less than the direct costs of providing the service.

NASD Regulation estimates that the combination of increases in member fees will generate $8.4 million in additional revenues (71 percent of total additional revenues to be generated by all fee changes proposed in this and other filings). Overall, NASD Regulation expects that all of the proposed fee changes on both members and public investors will generate approximately $12 million in additional revenue. Even with this additional revenue, the Office will continue to incur operating losses of more than $13 million.[6]

Proposed Increases in Member Surcharge

NASD is proposing to amend the surcharge schedule to add brackets[7] and substantially increase the surcharge for the upper brackets. Under the current rule there are five brackets with surcharges from $100 to $500. Under the proposed new schedule there will be 12 brackets with surcharges starting at $150 for cases of $2,500 or less, up to $3,600 for cases exceeding $10,000,000. The addition of the new brackets and the graduation of the surcharge from the smallest case to the largest will cause the members' share of the costs of the arbitration service to be assessed upon the members who actually use the process in proportion to their financial involvement and exposure in the process.

The proposed rule change also replaces ''Arbitration Department'' with ''Director of Arbitration'' in Rule 10333(a) of the Code. In addition, the proposed rule change adds section (c) to Rule 10333 of the Code to state that if the dispute, claim, or controversy does not involve, disclose, or specify a money claim, the surcharge shall be $1,200 or such greater or lesser amount as the Director of Arbitration or the panel of arbitrators may require, but cannot exceed the maximum amount in the schedule.

NASD Regulation intends to make the proposed rule change effective on July 1, 1997.

2. Statutory Basis

NASD Regulation believes that the proposed rule change is consistent with the provisions of Section 15A(b)(5) of the Act[8] in that the proposed rule change provides for the equitable allocation of reasonable charges among members using the Association's arbitration facility because it further

[3] The NASD Regulation Board of Directors formed a Subcommittee on Arbitration Fees to examine the current revenue, cost and fee structure and recommend changes. The Subcommittee was composed of three public members (James E. Burton, CalPERS; Bonnie Guiton Hill, Times-Mirror Corp.; and William S. Lapp, Esq., Lapp, Laurie, Libra, Abramson & Thomson, board member of the Public Investors Arbitration Bar Association and member of NASD Regulation's National Arbitration and Mediation Committee (NAMC) and three securities industry members (Raymond E. Wooldridge, Southwest Securities Group, Inc., NAMC member and Chairman of NAMC's Finance Subcommittee, and former member of NASD Regulation's Board of Directors; Philip S. Cottone, Rutherford, Brown & Catherwood, Inc., Chairman of NAMC and former member of NASD Regulation's Board of Directors; and O. Ray Vass, Merrill, Lynch, Pierce, Fenner & Smith, Inc., member of NASD Regulation's Membership Committee).

[4] The NASD also submitted a proposed rule change to amend Rules 10205 and 10332, fees and hearing session deposits for disputes between public investors and members and between members or associated persons and other members or associated persons.

[5] The member surcharge is also imposed on members where an associated person of the member is named; however, there is only one surcharge imposed on each member in each case.

[6] *See* Exhibit 3 to the rule filing.

[7] Fees are based on the amount in dispute; a range of amounts in dispute (e.g., $50,000.01 to $100,000) to which a particular fee applies is referred to as a bracket.

[8] 15 U.S.C. 78*o*–3.

graduates the fee schedules and requires member firm users to absorb a reasonable share of the costs of operating the arbitration service.

B. Self-Regulatory Organization's Statement on Burden on Competition

The NASD does not believe the proposed rule change will impose any burden on competition.

C. Self-Regulatory Organization's Statement on Comments on the Proposed Rule Change Received From Members, Participants or Others

No written comments were solicited or received with respect to the proposed rule change.

III. Date of Effectiveness of the Proposed Rule Change and Timing for Commission Action

The proposed rule change has become effective upon filing pursuant to Section 19(b)(3)(A) of the Act and subparagraph (e) of Rule 19b–4 thereunder, in that the proposal constitutes a change to a fee which the NASD imposes on its members. At any time within 60 days of the filing of such proposed rule change, the Commission may summarily abrogate such rule change if it appears to the Commission that such action is necessary or appropriate in the public interest, for the protection of investors, or otherwise in furtherance of the purposes of the Act.

IV. Solicitation of Comments

Interested persons are invited to submit written data, views, and arguments concerning the foregoing. Persons making written submissions should file six copies thereof with the Secretary, Securities and Exchange Commission, 450 Fifth Street, N.W., Washington, D.C. 20549. Copies of the submission, all subsequent amendments, all written statements with respect to the proposed rule change that are filed with the Commission, and all written communications relating to the proposed rule change between the Commission and any person, other than those that may be withheld from the public in accordance with the provisions of 5 U.S.C. 552, will be available for inspection and copying at the Commission's Public Reference Room. Copies of such filing will also be available for inspection and copying at the principal office of the NASD. All submissions should refer to File No. SR–NASD–97–40 and should be submitted by July 30, 1997.

For the Commission, by the Division of Market Regulation, pursuant to delegated authority.

Margaret H. McFarland,

Deputy Secretary.

[FR Doc. 97–17939 Filed 7–8–97; 8:45 am]

BILLING CODE 8010–01–M

SECURITIES AND EXCHANGE COMMISSION

[Release No. 34–38806; File No. SR–PCX–97–19]

Self-Regulatory Organizations; Pacific Exchange, Inc.; Order Granting Accelerated Approval to Proposed Rule Change Relating to Its Specialist Evaluation Program

July 1, 1997.

I. Introduction

On May 29, 1997, the Pacific Exchange, Inc. (''PCX'' or ''Exchange'') submitted to the Securities and Exchange Commission (''SEC'' or ''Commission''), pursuant to Section 19(b)(1) of the Securities Exchange Act of 1934 (''Act'')[1] and Rule 19b–4 thereunder,[2] a proposed rule change to extend its specialist evaluation pilot program for an additional six months, until January 1, 1998, and make certain amendments to the pilot.

The proposed rule change was published for comment in Securities Exchange Act Release No. 38712 (June 3, 1997), 62 FR 31857 (June 11, 1997). No comments were received on the proposal. This order approves the proposed rule change on an accelerated basis.

II. Description

On October 1, 1996, the Commission approved a nine-month pilot program for the evaluation of PCX equity specialists.[3] The exchange is now proposing to extend the pilot program for an additional six month period, until January 1, 1998. The Exchange represented that the reason for the extension is to allow it more time to evaluate the impact of the SEC's new order handling rules on the performance criteria.[4] During the extension of the pilot, the Exchange has represented that it will determine an appropriate overall passing score and individual passing scores for each criterion used in the pilot program.

In addition, the Exchange proposes to implement for use in the evaluation program, beginning with the third quarter review period of 1997 (*i.e.*, the quarter beginning July 1, 1997), certain programming changes requested by the Commission in its October 1, 1996 order approving the pilot program. Specifically, the Commission requested that the Exchange reprogram its systems so that the following criteria are calculated using the NBBO instead of the primary market quote: Trading Between the Quote, Book Display Time, and Quote Performance (Equal or Better Quote Performance and Better Quote Performance). The description of these performance criteria will be modified as follows:

Trading Between the Quote[5]

''Trading Between the Quote'' currently measures the number of market and marketable limit orders that are executed between the best primary market bid and offer. For this criterion to count toward the overall evaluation score, ten orders or more must have been executed during the quarter in which the specialist is being evaluated. If less than ten orders are executed, this criterion will not be counted and the rest of the evaluation criteria will be given more weight.

When a market or marketable limit order is executed, the execution price is compared to the primary market bid and

---

[1] 15 U.S.C. 78s(b)(1).

[2] 17 CFR 240.19b–4.

[3] Prior to the adoption of the pilot program, PCX Rule 5.37(a) provided that the Exchange's Equity Allocation Committee (''EAC'') evaluate all registered specialists on a quarterly basis and that each specialist receive an overall evaluation rating based on three criteria of specialist performance: (1) Specialist Evaluation Questionnaire Survey (''Questionnaire'') (45% of overall score); (2) SCOREX Limit Order Acceptance Performance (10%); and (3) National Market System Quote Performance (45%). *See* PSE Rule 5.37 (July 1995).

The pilot program modifies Rule 5.37(a) by adding three new criteria of performance and eliminating one performance criterion. The new criteria are: (1) Executions (50%) (itself consisting of four criteria: (a) Turnaround Time (15%); (b) Holding Orders Without Action (15%); (c) Trading Between the Quote (10%); and (d) Executions in Size Greater Than BBO (10%)); (2) Book Display Time (15%); and (3) Post-1 p.m. Parameters (10%). The pilot eliminates the SCOREX Limit Order Acceptance Performance criterion. Further, the pilot adds more questions to the Questionnaire, and reduces its weight from 45% to 15% of the overall score. Finally, the National Market System Quote Performance criterion (renamed Quote Performance under the pilot) has been amended to include within it a submeasure for bettering the quote (each of the two submeasures is accorded a weight of 5% of the overall score). For a more detailed description of the performance criteria utilized in the PCX's pilot program, see Securities Exchange Act Release No. 37770 (October 1, 1996), 61 FR 52820 (October 8, 1996) (File No. SR–PSE–96–28). *See also generally* PCX Rule 5.37 (description of the standards and procedures applicable to the EAC's evaluation of specialists).

[4] *See* Securities Exchange Act Release No. 37619A (September 6, 1996), 61 FR 48290 (September 12, 1996) (File No. S7–30–95).

[5] ''Trading Between the Quote'' is one of the four criteria which together constitute the ''Executions'' criterion. *See supra* note 3.

offer. The specialist will be awarded points based on the percentage of orders the specialist receives that are executed between the primary market bid and offer. If the execution price falls between the primary market bid and offer, the trade is counted as one that traded between the quote at the time of execution. Each time a trade is executed, the primary market quote will be noted. If the spread of that quote is two or more trading fractions apart, that trade will count as one eligible for the comparison of the execution price to the quote.

The Exchange is now proposing to continue using this criterion, but to replace references to the ''primary market bid and offer'' with references to the ''NBBO.''

Book Display Time

This criterion calculates the percentage of book shares at the best price in the book that is displayed in the specialist's quote, by symbol, and the duration of time that each percentage is in effect. This criterion rates the P/COAST book displayed 100% of the time. The sizes of all open buy limit orders at the best price for the symbol in the specialist's book are totaled and compared to the bid size quote. The sizes of all open sell limit orders at the best price for the symbol in the book are totaled and compared to the offer size quote. This will be done for each symbol traded by the specialist, but only for those orders within the primary market quote. Limit orders in the book that were priced beyond the primary market quote will not be included; they will not be executed until they reach the price in the primary market quote, so the specialist should not be required to cover them in his (her) quote sizes.

The Exchange is now proposing to continue using this criterion, but to replace references to the ''primary market bid and offer'' to references to the ''NBBO.''

Quote Performance

This criterion, on which 10% of each specialist evaluation is based, consists of two submeasures: (a) Equal or Better Quote Performance; and (b) Better Quote Performance.

Equal or Better Quote Performance calculates for each issue traded, the percentage of time in which a specialist's bid or offer is equal to or better than the primary market quote with a 500 share market size or the primary market size, whichever is less, with a 200 share minimum.

Better Quote Performance calculates for each issue traded, the percentage of time in which a specialist's bid or offer is better than the primary market quote with a 500 share market size or the primary market size, whichever is less, with a 200 share minimum. The Exchange is proposing to continue using this criterion, but to replace references to the ''primary market bid and offer'' with references to the ''NBBO.''

In addition, the Exchange has represented that it will submit a proposed rule change with the Commission pursuant to rule 19b–4 under the Act[6] by November 15, 1997 that will specify an overall passing score for the performance evaluation and individual passing scores for each criterion, as well as a request to further extend the pilot beyond January 1, 1998.

III. Discussion

The Commission believes that specialists play a crucial role in providing stability, liquidity, and continuity to the trading of stocks. Among the obligations imposed upon specialists by the Exchange, and by the Act and the rules promulgated thereunder, is the maintenance of fair and orderly markets in their designated securities.[7] To ensure that specialists fulfill these obligations, it is important that the Exchange conduct effective oversight of their performance. The PCX's specialist evaluation program is critical to this oversight.

In its order initially approving the specialist evaluation pilot program,[8] the Commission asked the Exchange to monitor the effectiveness of the amended program. Specifically, the Commission requested information about the number of specialists who fell into the bottom 10% of all registered specialists on their respective trading floors in the overall program, whether they subsequently appeared before the EAC, and any restrictions placed upon, or further action taken against, such specialists. The Commission also requested information as to the number of specialists who appeared before the EAC as a result of scoring in the bottom 10% in any two out of four consecutive quarterly evaluations, whether any restrictions were imposed on such specialists, and the results of any formal proceedings that were initiated against them.

In May 1997, the PCX submitted to the Commission its monitoring report regarding its specialist evaluation pilot program. The report describes the PCX's experience with the pilot program during the initial two quarters of its operation (*i.e.*, the fourth quarter of 1996 and the first quarter of 1997). In terms of the overall scope of the program, the Commission continues to believe that the objective measures, together with the floor broker questionnaire, should generate sufficiently detailed information to enable the Exchange to make accurate assessments of specialist performance. In this regard, the increased emphasis on objective criteria under the pilot has been useful in identifying how well specialists carry out certain aspects (*i.e.*, timeliness of execution, price improvement, and market making quality) of their responsibilities as specialists.

However, in the order initially approving the PCX's pilot program, the Commission expressed its concerns about approving a specialist evaluation program that contains objective performance criteria calculated using the primary market quote. The Commission believed that such criteria were more appropriately calculated based on the NBBO. The Exchange now proposes to amend the pilot program, beginning with the third review period of 1997, to utilize the NBBO instead of the primary market quote in the Trading Between the Quote, Book Display Time, and Quote Performance criteria. The Commission believes that the NBBO is a more appropriate standard in this context in that it will enable the Exchange to gauge the performance of PCX specialists in comparison with their competitors not only in the primary market, but in the national market system as a whole.[9] The Commission finds that the PCX's proposal is responsive to the Commission's request for such an amendment.

Further, the Commission has stated previously that true relative performance standards are the preferable means to evaluate the comparative performance of specialists on a national securities exchange.[10] Moreover, the Commission also has

[6] 17 CFR 240.19b–4

[7] Rule 11b–1, 17 CFR 240.11b–1; PSE rule 5.299f).

[8] For a description of the Commission's rationale for initially approving the PCX's adoption of its specialist evaluation pilot program, see Securities Exchange Act Release No. 37770, *supra* note 3. The discussion in the aforementioned order is incorporated by reference into this order.

[9] The Exchange's use of the primary market quote in these three measures did not allow for such comparisons to be made in instances where the primary market quote is not equal to the NBBO. *See Id.* at n.16.

[10] By relative performance standards the Commission means standards that automatically subject specialists that fall below a predetermined threshold of performance to a special performance review by the appropriate exchange authority. *See* Securities Exchange Act Release No. 28843 (February 1, 1991), 56 FR 5040 (February 7, 1991); Division of Market Regulation, The October 1987 Market Break Report (February 1988) at xvii and 4–28 to 4–29.

stated that an effective evaluation program should subject specialists who meet minimum performance levels on the overall program, but need help or guidance in improving their performance in a particular area, to review. While the PCX's specialist evaluation program subjects those specialists falling into the bottom 10% of all specialists on his or her trading floor to review by the EAC, it does not set a minimum performance level on the overall program. In addition, the Exchange has not established minimum performance standards for individual performance criteria. However, the Commission notes that the Exchange has represented that it will establish an overall passing score for the evaluation program as well as individual passing scores for each performance measure during the course of the pilot.

Accordingly, the Commission believes that it is appropriate to extend the current pilot program for an additional six-month period, until January 1, 1998. This six-month period will allow the Exchange to respond to the Commission's continuing concerns with the PCX's specialist evaluation program. Moreover, the Commission expects the Exchange to conduct an ongoing examination of the parameter ranges and corresponding points allotted under each criterion to ensure that they continue to be set at appropriate levels.

The Commission therefore requests that the PCX submit by November 15, 1997 a proposed rule change pursuant to Rule 19b–4 to revise the pilot to adopt a passing score for the overall performance evaluation and each criterion thereof. This proposed rule change also should include any proposal by the PCX is extend the pilot beyond January 1, 1998.

In addition, the Commission requests that the PCX submit a report to the Commission, by November 15, 1997, describing its continuing experience with the pilot. At a minimum, this report should contain data, for the second and third quarters of 1997, on (1) the number of registered specialists who scored in the bottom 10% of all registered specialists on his or her trading floor in the overall program; (2) the number of specialists, who, as a result of scoring in the bottom 10% in any one quarterly evaluation, appeared before the EAC, and the type of restrictions that were imposed on such specialists (*i.e.*, restriction on new allocations or acting as an alternate specialist), or any further action was taken against such specialists; (3) the number of specialists who, as a result of scoring in the bottom 10% in any two out of four consecutive quarterly evaluations, appeared before the EAC, whether any restrictions were imposed on such specialists, and whether formal proceedings were initiated against such specialists; and (4) the number of specialists for who formal proceedings were initiated, the results of such proceedings, including a list of any stocks reallocated from a particular unit.

The Commission notes that the Exchange's pilot program only modifies the performance criteria of Rule 5.37(a). Consequently, the Commission expects the EAC to continue to evaluate the performance of specialists during the pilot period in accordance with the standards and procedures found in the PCX rules.[11]

For the reasons discussed above, the Commission finds that the PCX's proposal to extend its pilot program is consistent with the requirements of Sections 6(b) and 11 of the Act[12] and the rules and regulations thereunder applicable to a national securities exchange. Specifically, the Commission finds that the proposed rule change is consistent with the Section 6(b)(5) requirement that the rules of an exchange be designed to promote just and equitable principles of trade, to remove impediments to and perfect the mechanism of a free and open market and a national market system, and, in general, to protect investors and the public interest.[13]

Further, the Commission finds that the proposal is consistent with Section 11(b) of the Act[14] and Rule 11b–1 thereunder which allow securities exchanges to promulgate rules relating to specialists in order to maintain fair and orderly markets and to remove impediments to and perfect the mechanism of a national market system.

The Commission finds good cause for approving the proposed rule change prior to the thirtieth day after the date of publication of notice thereof in the **Federal Register.** This will permit the pilot program to continue both on an uninterrupted basis and with the use of the NBBO, instead of the primary market quote, in the calculation of the Trading Between the Quote, Book Display Time, and Quote Performance criteria. In addition, the rule change that implemented the pilot program initially was published in the **Federal Register** for the full comment period, and no comments were received.[15]

Accordingly, the Commission believes that it is consistent with the Act to accelerate approval of the proposed rule change.

IV. Conclusion

It is therefore ordered, pursuant to Section 19(b)(2) of the Act,[16] that the proposed rule change (SR–PCX–97–19) is approved.

For the Commission, by the Division of Market Regulation, pursuant to delegated authority.[17]

Margaret H. McFarland,

Deputy Secretary.

[FR Doc. 97–17941 Filed 7–8–97; 8:45 am]

BILLING CODE 8010–01–M

[11] In this regard, all specialists falling within the bottom 10% of specialists on their respective floors in any review period are required to meet with the EAC. *See also* PCX Rule 5.37 (standards applicable to specialists falling into the bottom 10% in any two out of four review periods, including those pertaining to the initiation of formal reallocation proceedings). Moreover, PCX Rule 5.36(d), Commentary .03 requires that all specialists falling into the bottom 10% in a review period must be precluded from acting as alternate specialists until their ranking rises above the bottom 10%, unless the EAC determines otherwise. In addition, PCX Rule 5.37(b), Commentary .01 requires that all such specialists shall not be eligible for new allocations until their ranking rises above the bottom 10%; however, the EAC may make exceptions if there are sufficient mitigating circumstances.

As also noted in the Commission's order approving the latter restriction, findings of ''mitigating circumstances'' should not be routine, but should remain the exception and be made only when appropriately warranted. *See* Securities Exchange Act Release No. 37326 (June 19, 1996), 61 FR 32875 (June 25, 1996) (File No. SR–PSE–96–13). Consequently, the Commission expects that appropriate action in accordance with PCX rules will be taken with regard to those specialists falling into the botton 10%.

[12] 15 U.S.C. 78f(b) and 78k.

[13] In approving this rule change, the Commission has considered the proposed rule's impact on efficiency, competition, and capital formation. 15 U.S.C. § 78c(f).

[14] 15 U.S.C. 78k(b).

[15] *See* Securities Exchange Act Release 37770, *supra* note 3.

[16] 15 U.S.C. 78s(b)(2).

[17] 127 CFR 200.30–3(a)(12).

SMALL BUSINESS ADMINISTRATION

Reporting and Recordkeeping Requirements Under OMB Review

ACTION: Notice of reporting requirements submitted for review.

SUMMARY: Under the provisions of the Paperwork Reduction Act (44 U.S.C. Chapter 35), agencies are required to submit proposed reporting and recordkeeping requirements to OMB for review and approval, and to publish a notice in the **Federal Register** notifying the public that the agency has made such a submission.

DATES: Comments should be submitted on or before August 8, 1997. If you intend to comment but cannot prepare comments promptly, please advise the OMB Reviewer and the Agency Clearance Officer before the deadline.

COPIES: Request for clearance (OMB 83–1), supporting statement, and other documents submitted to OMB for review may be obtained from the Agency Clearance Officer. Submit comments to the Agency Clearance Officer and the OMB Reviewer.

FOR FURTHER INFORMATION CONTACT:

Agency Clearance Officer: Jacqueline White, Small Business Administration, 409 3rd Street, SW., 5th Floor, Washington, DC 20416, Telephone: (202) 205–6629.

OMB Reviewer: Victoria Wassmer, Office of Information and Regulatory Affairs, Office of Management and Budget, New Executive Office Building, Washington, DC 20503.

Title: Small Business Development Center.

Form No: SBA Form 1062.

Frequency: Monthly.

Description of Respondents: Small Business Development Center Counselors.

Annual Responses: 230,000.

Annual Burden: 115,000.

Dated: July 2, 1997.

Jacqueline White,

Chief, Administrative Information Branch.

[FR Doc. 97–17860 Filed 7–8–97; 8:45 am]

BILLING CODE 8025–01–P

SMALL BUSINESS ADMINISTRATION

[Declaration of Disaster #2959]

Commonwealth of Kentucky

Powell County and the contiguous Counties of Clark, Estill, Lee, Menifee, Montgomery, and Wolfe in the Commonwealth of Kentucky constitute a disaster area as a result of damages caused by flooding which occurred on June 16 and 17, 1997. Applications for loans for physical damages may be filed until the close of business on August 29, 1997 and for economic injury until the close of business on March 30, 1998 at the address listed below or other locally announced locations: U.S. Small Business Administration, Disaster Area 2 Office, One Baltimore Place, Suite 300, Atlanta, GA 30308.

The interest rates are:

	Percent
For Physical Damage:	
Homeowners With Credit Available Elsewhere	8.000
Homeowners Without Credit Available Elsewhere	4.000
Businesses With Credit Available Elsewhere	8.000
Businesses and Non-Profit Organizations Without Credit Available Elsewhere	4.000
Others (Including Non-Profit Organizations) With Credit Available Elsewhere	7.250
For Economic Injury:	
Businesses and Small Agricultural Cooperatives Without Credit Available Elsewhere	4.000

The number assigned to this disaster for physical damage is 295906 and for economic injury the number is 952400.

(Catalog of Federal Domestic Assistance Program Nos. 59002 and 59008)

Dated: June 30, 1997.

Aida Alvarez,

Administrator.

[FR Doc. 97–17859 Filed 7–8–97; 8:45 am]

BILLING CODE 8025–01–P

SMALL BUSINESS ADMINISTRATION

[(Declaration of Disaster #2949]

State of Minnesota; Amendment #5

In accordance with a notice from the Federal Emergency Management Agency dated June 27, 1997, the above-numbered Declaration is hereby amended to extend the deadline for filing applications for physical damages as a result of this disaster to August 6, 1997.

All other information remains the same, i.e., the deadline for filing applications for economic injury is January 8, 1998.

(Catalog of Federal Domestic Assistance Program Nos. 59002 and 59008)

Dated: June 30, 1997.

Bernard Kulik,

Associate Administrator for Disaster Assistance.

[FR Doc. 97–17858 Filed 7–8–97; 8:45 am]

BILLING CODE 8025–01–P

SMALL BUSINESS ADMINISTRATION

[Declaration of Disaster #2948]

State of North Dakota; Amendment #2

In accordance with a notice received from the Federal Emergency Management Agency dated June 26, 1997, the above-numbered Declaration is hereby amended to extend the deadline for filing applications for physical damages as a result of this disaster to August 6, 1997.

All other information remains the same, i.e., the deadline for filing applications for economic injury is January 7, 1998.

(Catalog of Federal Domestic Assistance Program Nos. 59002 and 59008)

Dated: June 30, 1997.

Bernard Kulik,

Associate Administrator, for Disaster Assistance.

[FR Doc. 97–17857 Filed 7–8–97; 8:45 am]

BILLING CODE 8025–01–M

DEPARTMENT OF STATE

[Public Notice 2563]

Privacy Act of 1974; Altered System of Records

Notice is hereby given that the Department of State proposes to alter an existing system of records, STATE-44, pursuant to the provisions of the Privacy Act of 1974, as amended (5 U.S.C. 552a(r)), and the Office of Management and Budget Circular No. A–130, Appendix I. The Department's report was filed with the Office of Management and Budget on June 17, 1997.

It is proposed that the current system will retain the name ''Congressional Travel Records.'' However, revisions and/or additions are proposed to the security classification; authorities; categories of individuals and records covered by the system; routine uses; storing, retrieving, and safeguarding practices; retention and disposal requirements; system manager and address; notification procedure; record access and amendment procedures; and record source categories. These changes to the existing system description are proposed in order to reflect more accurately the Bureau of Legislative Affairs' record-keeping system, and a reorganization of activities and operations.

Any persons interested in commenting on the altered system of records may do so by submitting comments in writing to Kenneth F. Rossman; Acting Chief, Programs and Policies Division, Office of Information Resources Management Programs and Services, Room 1239, Department of State, 2201 C Street, NW, Washington, DC 20520–1239. This system of records will be effective 40 days from the date of publication, unless we receive comments which will result in a contrary determination.

The altered system description, ''Congressional Travel Records, STATE-44'' will read as set forth below.

Dated: June 17, 1997.

Genie M. Norris,

Acting Assistant Secretary for the Bureau of Administration.

State–44

SYSTEM NAME:

Congressional Travel Records.

SECURITY CLASSIFICATION:

Unclassified and classified.

SYSTEM LOCATION:

Department of State, 2201 C Street, NW, Washington, DC 20520.

CATEGORIES OF INDIVIDUALS COVERED BY THE SYSTEM:

Members of Congress, Congressional staffers, Executive Branch invitees and Department of Defense escorts.

AUTHORITY FOR MAINTENANCE OF THE SYSTEM:

22 U.S.C. 2651a (Organization of the Department of State); 22 U.S.C. 3921 (Management of service); 5 U.S.C. 301 (Management of the Department of State).

CATEGORIES OF RECORDS IN THE SYSTEM:

Correspondence, memoranda, telegrams, and E-mail messages between the Department of State, Congress and the overseas post pertaining to the arrangements and expenses of the individual's trip including non-government funded trips as requested by Members of Congress; letters of authorization from the Committee Chairman or the authorizing member of Congress regarding funds for the trip; facsimiles between Congressional offices and the Department regarding itineraries; itineraries to and from the Combined Airlines Ticket Office; copies of Government Travel Requests; copies of logistical and administrative arrangements such as meeting and appointment schedules; hotel and transportation provisions; copies of substantive reporting of topic/purpose of trip; financial data sheets showing expenses anticipated; receipts of travelers checks; per diem worksheets; memoranda to the Cashier from the Bureau of Legislative Affairs requesting advances; classified receipt forms; and passport information sheets.

ROUTINE USES OF RECORDS MAINTAINED IN THE SYSTEM, INCLUDING CATEGORIES OF USERS AND PURPOSES OF SUCH USES:

The information in this system is used primarily by the current and former travelers when they express need or desire or any information relative to their particular travel. The records are also used to provide: The Office of Legislative Operations (Congressional Correspondence/Legislative Reference Units) and posts abroad with information to facilitate the travel arrangements requested, and information about travel of Members of Congress for the purpose of identifying their areas of interests; desk officers with information regarding previous and current travel to their region; Legislative Management Officers with information for determining current and previous travel to particular regions when requested by Congressional offices; and Department principals and Ambassadors-designate with information regarding particular interests of Members of Congress to specific posts or regions. Also see ''Routine Uses'' paragraphs of Prefatory Statement published in the **Federal Register.**

POLICIES AND PRACTICES FOR STORING, RETRIEVING, ACCESSING, RETAINING AND DISPOSING OF RECORDS IN THE SYSTEM:

STORAGE:

Electronic media, hard copy.

RETRIEVABILITY:

Individual name.

SAFEGUARDS.

All employees of the Department of State have undergone a thorough background security investigation. Access to the Department and its annexes is controlled by security guards and admission is limited to those individuals possessing a valid identification card or individuals under proper escort. All records containing personal information are maintained in secured file cabinets or in restricted areas, access to which is limited to authorized personnel. Access to computerized files is password-protected and under the direct supervision of the system manager. The system manager has the capability of printing audit trails of access from the computer media, thereby permitting regular and *ad hoc* monitoring of computer usage.

RETENTION AND DISPOSAL:

These records will be maintained until they become inactive, at which time they will be destroyed or retired according to published record schedules of the Department of State and as approved by the National Archives and Records Administration. More specific information may be obtained by writing to the Acting Director; Office of Information Resources Management Programs and Services, Room 1239, Department of State; 2201 C Street, NW, Washington, DC 20520–1239.

SYSTEM MANAGER(S) AND ADDRESS:

Director, Office of Legislative Operations, Bureau of Legislative Affairs, Room 7261, Department of State; 2201 C Street, NW, Washington, DC 20520–7261.

NOTIFICATION PROCEDURE:

Individuals who have reason to believe that the Bureau of Legislative Affairs (Congressional Travel Unit) might have travel records pertaining to themselves should write to the Acting Director, Office of Information Resources Management Programs and Services, Room 1239, Department of State, 2201 C Street, NW, Washington, DC 20520–1239. The individual must specify that he/she wishes the Congressional Travel Records to be checked. At a minimum, the individual must include: name; date and place of birth; current mailing address and zip code; signature; dates of travel and the name of the head of the delegation.

RECORD ACCESS AND AMENDMENT PROCEDURES:

Individuals who wish to gain access to or amend records pertaining to themselves should write to the Acting Director, Office of Information Resources Management Programs and Services (address above).

RECORD SOURCE CATEGORIES:

These records contain information obtained from the individual, overseas posts, the Bureau of Legislative Affairs, and Congressional Committee staffers.

SYSTEMS EXEMPTED FROM CERTAIN PROVISIONS OF THE ACT:

None.

[FR Doc. 97–17813 Filed 7–8–97; 8:45 am]

BILLING CODE 4710–24–M

DEPARTMENT OF TRANSPORTATION

Coast Guard

[CGD 97-024]

National Preparedness for Response Exercise Program (PREP)

AGENCY: Coast Guard, DOT.

ACTION: Notice of a public workshop.

SUMMARY: The Coast Guard, the Environmental Protection Agency (EPA), the Research and Special Programs Administration (RSPA) and the Minerals Management Service (MMS), in concert with the states, the oil industry and concerned citizens, developed the Preparedness for Response Exercise Program (PREP). This notice announces the next PREP workshop.

DATES: The workshop will be held on August 6–7, 1997 from 8:30 AM to 4:30 PM.

ADDRESSES: The workshop will be held in Ballrooms A and B at the Holiday Inn Hotel and Suites at 625 First Street, Alexandria, VA 22314.

FOR FURTHER INFORMATION CONTACT: For general information regarding the PREP program and the schedule, contact Ms. Karen Sahatjian, Marine Safety and Enironmental Protection Directorate, Office of Response, (G–MOR–2), (202) 267-02850. The schedule and exercise design manual is available on the internet at http://www.navcen.uscg.mil or to obtain a hard copy of the exercise design manual, contact Ms. Toni Hundley at the Office of Pipeline Safety at (202) 366–4397. The 1994 PREP Guidelines and Training Elements are available at no cost by writing or faxing the TASC Dept Warehouse, 3341 Q 75th Avenue, Landover, MD 20785, fax: 301-386-5394. The stock numbers of each manual are: PREP Guideline—USCG–X0191; the Training Reference—USCG–X0188. Please indicate the quantity when ordering. Quantities are limited to 10 per order.

SUPPLEMENTARY INFORMATION:

Background Information

Federal Register notices were published on March 26, 1997 (62 FR 14495) and May 13, 1997 (62 FR 26346) requesting comments on the following topics: (1) developing and Evaluating an Oil Spill Response Exercise, (2) government-initiated unannounced exercise, (3) minor changes to existing PREP Guidelines, and (4) the proposed triennial exercise schedule. Coast Guard has received numerous comments, including requests to conduct another two day public workshop to discuss these and other topics. The workshop will focus on the comments received, as well as ideas for incorporating further hazardous substances response plan exercises into the existing exercise program.

The workshop will be a facilitated interactive discussion of the following agenda items:

August 6

Review Goals and Objectives of PREP since it's inception in 1994.
Review Comments received
Duscussion of Exercise Design Guidelines
Government-Initiated Unannounced Exercise Program
General impressions
Comments received
Credit

August 7

Address any unresolved issues
Ideas to integrate further Hazardous Substance response plan exercises into the current oil response exercise cycle without diluting either program.

Dated: June 30, 1997.

R.C. North,

Rear Admiral, U.S. Coast Guard, Assistant Commandant for Marine, Safety and Environmental Protection.

[FR Doc. 97–17911 Filed 7–8–97; 8:45 am]

BILLING CODE 4910–14–M

DEPARTMENT OF TRANSPORTATION

Federal Aviation Administration

Draft Advisory Circular: Detecting and Reporting Suspected Unapproved Parts

AGENCY: Federal Aviation Administration (FAA), DOT.

ACTION: Notice of availability; request for comments.

SUMMARY: This notice announces the availability of Draft Advisory Circular (AC) 21–29B, Detecting and Reporting Suspected Unapproved Parts (SUP). The AC provides updated information and guidance to the aviation community for detecting SUP and reporting them to the FAA.

DATES: Comments must be received on or before August 8, 1997.

ADDRESSES: Send all comments regarding the draft AC to the FAA SUP Program Office AVR–20, P.O. Box 16317, Washington, D.C. 20041.

FOR FURTHER INFORMATION CONTACT: Susan Trask, FAA SUP Program Office AVR–20, P.O. Box 16317, Washington, D.C. 20041, telephone (703) 661–0590, FAX 703–661–0113, Internet: Susan.Trask@faa.dot.gov.

SUPPLEMENTARY INFORMATION:

Comments Invited

A copy of the subject draft AC may be obtained by contacting the person named above under **FOR FURTHER INFORMATION CONTACT.**

Interested persons are invited to comment on the draft AC and submit such written data, views, or concerns as they desire. Commentors must identify the subject of the AC and submit comments in duplicate to the address listed above.

All comments received on or before the closing date will be considered prior to the final issuance of the revised AC.

Background

The AC, published under the authority granted to the Administrator by 49 U.S.C. 106(g), 49 U.S.C. 40101 *et seq.*, is being revised to illustrate an overview of the FAA's SUP Program and portray current policy.

Kenneth J. Reilly,

Manager, Suspected Unapproved Parts Program Office.

[FR Doc. 97–17909 Filed 7–8–97; 8:45 am]

BILLING CODE 4910–13–M

DEPARTMENT OF TRANSPORTATION

Federal Aviation Administration

[Summary Notice No. PE–97–37]

Petitions for Exemption; Summary of Petitions Received; Disposition of Petitions Issued

AGENCY: Federal Aviation Administration (FAA), DOT.

ACTION: Notice of petitions for exemption received and of dispositions of prior petitions.

SUMMARY: Pursuant to FAA's rulemaking provisions governing the application, processing, and disposition of petitions for exemption (14 CFR Part 11), this notice contains a summary of certain petitions seeking relief from specified requirements of the Federal Aviation Regulations (14 CFR Chapter I), dispositions of certain petitions previously received, and corrections. The purpose of this notice is to improve the public's awareness of, and participation in, this aspect of FAA's regulatory activities. Neither publication of this notice nor the inclusion or omission of information in the summary is intended to affect the legal status of any petition or its final disposition.

DATES: Comments on petitions received must identify the petition docket number involved and must be received on or before July 28, 1997.

ADDRESSES: Send comments on any petition in triplicate to: Federal Aviation Administration, Office of the Chief Counsel, Attn: Rule Docket (AGC–200), Petition Docket No. _____ 800 Independence Avenue, SW., Washington, D.C. 20591.

Comments may also be sent electronically to the following internet address: 9–NPRM–CMNTS@faa.dot.gov.

The petition, any comments received, and a copy of any final disposition are filed in the assigned regulatory docket and are available for examination in the Rules Docket (AGC–200), Room 915G, FAA Headquarters Building (FOB 10A), 800 Independence Avenue, SW.,

Washington, D.C. 20591; telephone (202) 267–3132.

FOR FURTHER INFORMATION CONTACT: Heather Thorson (202) 267–7470 or Angela Anderson (202) 267–9681 Office of Rulemaking (ARM–1), Federal Aviation Administration, 800 Independence Avenue, SW., Washington, DC 20591.

This notice is published pursuant to paragraphs (c), (e), and (g) of § 11.27 of Part 11 of the Federal Aviation Regulations (14 CFR Part 11).

Issed in Washington, D.C., on July 1, 1997.

Donald P. Byrne,

Assistant Chief Counsel for Regulations.

Petitions for Exemption

Docket No.: 28935.

Petitioner: Dornier Luftfahrt GmbH.

Sections of the FAR Affected: 14 CFR 21.19(b)(2).

Description of Relief Sought: To permit Dornier to modify its Dornier 328–100 aircraft by replacing its two turbopropeller engines with two turbofan engines without applying for a new type certificate for that aircraft.

Docket No.: 28934.

Petitioner: Covington Aircraft Engines, Inc.

Sections of the FAR Affected: 14 CFR 45.13 (b) and (c).

Description of Relief Sought: To permit Covington, instead of the engine manufacturer, to replace mutilated or unreadable data plates with a copy of the original data on Pratt and Whitney Wasp, Wasp, Jr., R985, and R1340 engines when an engine or component is overhauled at its facility.

Docket No.: 28906.

Petitioner: ElectroSonics.

Sections of the FAR Affected: 14 CFR 21.439(a)(2).

Description of Relief Sought: To permit ElectroSonics to be eligible for Designated Alteration Station authorization without being a manufacturer of a produce for which it has alteration authority under 14 CFR § 43.3(i).

Dispositions of Petitions

Docket No.: 26523.

Petitioner: Lone Star Flight Museum.

Sections of the FAR Affected: 14 CFR 45.25 and 45.29.

Description of Relief Sought/ Disposition: To permit petitioner and its members to continue to operate their historic military aircraft with 2-inch-high registration marks located beneath the horizontal stabilizer.

Grant, June 20, 1997, Exemption No. 5344C.

Docket No.: 28353.

Petitioner: Augusta S.P.A.

Sections of the FAR Affected: 14 CFR 21.19(b)(1).

Description of Relief Sought/ Disposition: To permit the petitioner to apply for an amendment to Type Certificate No. H7EU rather than applying for a new type certificate, to include a design change from two engines to one engine on the Agusta A119 helicopter.

Grant, June 25, 1997, Exemption No. 6648.

Docket No.: 22451.

Petitioner: Air Transport Association of America.

Sections of the FAR Affected: 14 CFR 121.613, 121.619(a), and 121.625.

Description of Relief Sought/ Disposition: To permit petitioner to dispatch an airplane, under IFR, to a destination airport, and list an alternate airport for that destination airport when the TAF for either one or both of those airports indicates by the use of conditional words such as ''BECMG,'' ''PROB,'' or ''TEMPO,'' in the TAF that the weather could be below authorized weather minimums at the time of arrival, provided that the information contained in another time increment of the TAF used by the certificate holder's dispatch center shows, for each flight to be dispatched, that the weather at the destination airport and alternate airport listed in the dispatch release will be at or above authorized weather minimums at the time of arrival.

Grant, June 23, 1997, Exemption No. 3585K.

Docket No.: 24770.

Petitioner: FlightSafety International.

Sections of the FAR Affected: 14 CFR 61.55 (b)(3); 61.56 (h)(2); 61.57 (c)(3) and (d)(2); 61.58(e); 61.64(e)(3); 61.65 (e)(2), and (g)(1) and (3); 61.67 (c)(4), and (d)(2); 61.163(d)(1); 61.191(d); and 61.197(e).

Description of Relief Sought/ Disposition: To permit the petitioner to use FAA-approved simulators to meet certain flight experience requirements of part 61.

Grant, June 24, 1997, Exemption No. 5324C.

Docket No.: 27601.

Petitioner: Austral Lineas Aereas.

Sections of the FAR Affected: 14 CFR 145.47(b).

Description of Relief Sought/ Disposition: To permit the petitioner, and FAA-certificated repair station (No. ASTY739M), to substitute the calibration standards of the Instituto Nacional de Tecnologia Industrial (INTI), Argentina's national organization, for the calibration standards of the U.S. National Institute of Standards and Technology (NIST), formerly the National Bureau of Standards (NBS), to test its inspection and test equipment.

Grant, June 27, 1997, Exemption No. 6651.

[FR Doc. 97–17789 Filed 7–8–97; 8:45 am]

BILLING CODE 4910–13–M

DEPARTMENT OF TRANSPORTATION

Federal Aviation Administration

Aviation Rulemaking Advisory Committee Meeting on Emergency Evacuation Issues

AGENCY: Federal Aviation Administration (FAA). DOT.

ACTION: Notice of public meeting.

SUMMARY: This notice announces a public meeting of the FAA's Aviation Rulemaking Advisory Committee (ARAC) to discuss emergency evacuation issues.

DATES: The meeting will be held on July 24, 1997 at 9:00 a.m. Arrange for oral presentations by July 17, 1997.

ADDRESSES: The meeting will be held on the 20th Floor, MIC Room of the Boeing Company, 1700 North Moore Street, Arlington, VA 22202 (Rosslyn Metro stop).

FOR FURTHER INFORMATION CONTACT: Jackie Smith, Office of Rulemaking, ARM–209, FAA, 800 Independence Avenue, SW, Washington, DC 20591, Telephone (202) 267–9682, FAX (202) 267–5075.

SUPPLEMENTARY INFORMATION: Pursuant to section 10(a)(2) of the Federal Advisory Committee Act (Pub. L. 92–463; 5 U.S.C. app. III), notice is given of an ARAC meeting to be held on July 24, 1997 at Boeing Company, 20th Floor, MIC Room, 1700 North Moore Street, Arlington, VA 22202 (Rosslyn Metro stop).

The agenda will include:

- Opening Remarks.
- Review of Action Items.
- Report on Performance Standards Working Group Activities.
- Vote on TSO–C69b.

The Aviation Rulemaking Advisory Committee will vote on the Performance Standards Working Group's proposal for revision to Technical Standard Order (TSO) C69b, Emergency slides, ramps, and slide/raft combinations. Anyone interested in obtaining a copy of this document should contact the individual listed under the heading.

FOR FURTHER INFORMATION CONTACT.

Attendance is open to the public, but will be limited to space available. The public must make arrangements by July

17, 1997 to present oral statements at the meeting. Written statements may be presented to the committee any time by providing 25 copies to the Assistant Executive Director for Emergency Evacuation Issues or by providing copies at the meeting. In addition, sign and oral interpretation, as well as a listening device, can be made available if requested 10 calendar days before the meeting. Arrangements may be made by contacting the person listed under **FOR FURTHER INFORMATION CONTACT.**

Issued in Washington, DC, on July 1, 1997.

Joseph A. Hawkins,

Executive Director, Aviation Rulemaking Advisory Committee.

[FR Doc. 97–17910 Filed 7–8–97; 8:45 am]

BILLING CODE 4910–13–M

DEPARTMENT OF TRANSPORTATION

Federal Aviation Administration

RTCA, Inc. Special Committee 187; Mode Select Beacon and Data Link System

Pursuant to section 10(a)(2) of the Federal Advisory Committee Act (Pub. L. 92–463, 5 U.S.C., Appendix 2), notice is hereby given for Special Committee 187 meeting to be held on July 22, 1997, starting at 9:00 a.m. The meeting will be held at RTCA, 1140 Connecticut Avenue, NW., Suite 1020, Washington, DC 20036.

The agenda will be as follows: (1) Introductory Remarks; (2) Review and Approval of the Agenda; (3) Review and Approval of the Summary of the Previous Meeting; (4) Review of Change 3 to RTCA/DO–181A; (5) Review of Change 2 to RTCA/DO–218; (6) Other Business; (7) Date and Place of Next Meeting.

Attendance is open to the interested public but limited to space availability. With the approval of the chairman, members of the public may present oral statements at the meeting. Persons wishing to present statements or obtain information should contact the RTCA Secretariat, 1140 Connecticut Avenue, NW., Suite 1020, Washington, DC 20036; (202) 833–9339 (phone); (202) 833–9434 (fax); or http://www.rtca. org (web site). Members of the public may present a written statement to the committee at any time.

Issued in Washington, DC, on July 2, 1997.

[FR Doc. 97–17908 Filed 7–8–97; 8:45 am]

BILLING CODE 4910–13–M

DEPARTMENT OF TRANSPORTATION

Federal Aviation Administration

Notice of Intent To Rule on Application To Impose a Passenger Facility Charge (PFC) at Key West International Airport, Key West, FL and Use the Revenue From a PFC at Key West International Airport, Key West, FL, and Marathon Airport, Marathon FL

AGENCY: Federal Aviation Administration (FAA), DOT.

ACTION: Notice of Intent to Rule on Application.

SUMMARY: The FAA proposes to rule and invites public comment on the application to Impose a PFC at Key West International Airport, and Use the revenue from a PFC at Key West International Airport, Key West, Florida, and marathon Airport, Marathon, Florida, under the provisions of the Aviation Safety and Capacity Expansion Act of 1990 (Title IX of the Omnibus Budget Reconciliation Act of 1990) (Public Law 101–508) and Part 158 of the Federal Aviation Regulations (14 CFR Part 158).

DATES: Comments must be received on or before August 8, 1997.

ADDRESSES: Comments on this application may be mailed or delivered in triplicate to the FAA at the following address: Orlando Airports District Office, 5950 Hazeltine National Dr., Suite 400, Orlando Florida 32822.

In addition, one copy of any comments submitted to the FAA must be mailed or delivered to Mr. Peter J. Horton, Community Services Director of Monroe County at the following address: Monroe County Public Service Building, 5100 College Road West, Wing 4, Room 405, Key West, Florida 33040.

Air carriers and foreign air carriers may submit copies of written comments previously provided to Monroe County under section 158.23 of Part 158.

FOR FURTHER INFORMATION CONTACT: Mr. Miguel A. Martinez, Project Manager, Orlando Airports District Office, 5950 Hazeltine National Dr., Suite 400, Orlando Florida 32822, 407–812–6331. The application may be reviewed in person at this same location.

SUPPLEMENTARY INFORMATION: The FAA proposes to rule and invites public comment on the application to Impose a PFC at Key West International Airport, Key West, Florida, and Use the Revenue from a PFC at Key West International Airport, Key West, Florida, and Marathon Airport, Marathon, Florida under the provisions of the Aviation Safety and Capacity Expansion Act of 1990 (Title IX of the Omnibus Budget Reconciliation Act of 1990) (Public Law 101–508) and Part 158 of the Federal Aviation Regulations (14 CFR Part 158).

On June 24, 1997, the FAA determined that the application to Impose and Use a PFC submitted by Monroe County, Florida, was substantially complete within the requirements of section 158.25 of Part 158. The FAA will approve or disapprove the application, in whole or in part, no later than October 14, 1997.

The following is a brief overview of PFC Application No. 97–03–C–00–EYW.

Level of the proposed PFC: $3.00.

Proposed charge effective date: November 1, 1997.

Proposed charge expiration date: October 31, 1999.

Total estimated PFC revenue: $1,500,000.

Brief description of proposed project(s):

Project 1 Construct Auto Parking Lot

Project 2 Acquire Property—Runway 9 RPZ

Project 3 Acquire Property—Runway 27 RPZ & RSA

Project 4 Acquire 1,500 Gallon ARFF Vehicle

Project 5 Update FAR Part 250 Study—Marathon

Project 6 Construct New ARFF Building

Project 7 Rehabilitate or Replace Rotating Beacon

Project 8 East Martello Property—Environmental Enhancement of RSA

Project 9 Rehabilitate and Reconfigure General Aircraft Parking Apron

Project 10 Rehabilitate and Reconfigure General Aviation Parking Apron

Class or classes or air carriers which the public agency has requested not be required to collect PFCs: Public agency has not requested to exclude a class of air carrier.

Any person may inspect the application in person at the FAA office listed above under **FOR FURTHER INFORMATION CONTACT.**

In addition, any person may, upon request, inspect the application, notice and other documents germane to the application in person at Monroe County, Key West, Florida.

Issued in Orlando, Florida on June 25, 1997.

Charles E. Blair,

Manager, Orlando Airports District Office, Southern Region.

[FR Doc. 97–17788 Filed 7–8–97; 8:45 am]

BILLING CODE 4910–13–M

DEPARTMENT OF TRANSPORTATION

Federal Highway Administration

Environmental Impact Statement: Kennebec County, ME

AGENCY: Federal Highway Administration (FHWA), DOT.

ACTION: Notice of intent.

SUMMARY: The FHWA is issuing this notice to advise the public that an Environmental Impact Statement (EIS) will be prepared for a proposed project in the City of Augusta, Kennebec County, Maine.

FOR FURTHER INFORMATION CONTACT: Jim Linker, Manager of Right of Way and Environmental Programs, Room 614, Muskie Federal Building, Augusta, Maine 04330, Telephone (207) 622–8355 ext. 23; or Ray Faucher, Project Manager, Maine Department of Transportation, Design Division, State House Station 16, Child Street, Augusta, Maine 04333, Telephone (207) 287–3171.

SUPPLEMENTARY INFORMATION: The FWHA, in cooperation wit the Maine Department of Transportation, will prepare an EIS on a proposal to improve highway connections across the Kennebec River to National Highway System and other State highways on the east and west sides of Augusta. This proposal is in response to a need to improve traffic congestion, improve traffic service and access, and to provide for projected traffic demands in a manner consistent with the City's Growth Management Plan.

The EIS will examine the feasibility and potential impacts of the following alternatives:

- Taking no action;
- Improving the existing highway corridor through Augusta from routes 201, 202, 3, 9, 17, 27, 100 and 105 on the east, to I–95 and routes 201, 202, 8, 11, 27, 100, and 104 on the west side of the city.
- Construction on new alignment in a corridor in the northern portion of Augusta, connecting major transportation routes on the east and west of the Kennebec River. The corridor is approximately 5 kilometers in length.
- Construction on new alignment in a corridor in the southern portion of Augusta, connecting major transportation routes on the east and west of the Kennebec River. The corridor is approximately 5 kilometers in length.

Coordination and scoping has been initiated with the City of Augusta, and appropriate Federal, State and local agencies. A public scoping meeting will be held on July 17, 1997, 7:00 p.m. at the Augusta City Hall. Other public meetings are anticipated during development of the EIS. The draft EIS will be available for public and agency review and comment and a public hearing will be held following publication of the draft. Public notice will be given of the time and place of the meetings and hearings.

To ensure that the full range of issues relating to this proposed action are addressed and all significant issues identified, comments and suggestions are invited from all interested parties. Comments or questions should be directed to FHWA or MDOT at the addresses provided above.

(Catalog of Federal Domestic Assistance Program Number 20.205, Highway Research, Planning and Construction. The regulations implementing Executive Order 12372 regarding intergovernmental consultation on Federal programs and activities apply to this program.)

Authority: 23 U.S.C. 315; 49 CFR 1.48.

Issued on: July 2, 1997.

Paul L. Lariviere,

Division Administrator, Federal Highway Administration, Augusta, Maine.

[FR Doc. 97–17851 Filed 7–8–97; 8:45 am]

BILLING CODE 4910–22–M

DEPARTMENT OF TRANSPORTATION

Maritime Administration

[Docket MSP–007/Docket S–946]

American President Lines, LTD.; Application for Approvals for Proposed Transfer of Operating-Differential Subsidy Agreement (MA/MSB–417) and Maritime Security Program Operating Agreements (MA/MSP–1 Through MA/MSP–9)

American President Lines, Ltd. (APL) by letter dated June 25, 1997, applied to the Maritime Administration (MARAD), for all approval, findings, and determinations necessary in order to transfer APL's Operating-Differential Subsidy Agreement, Contract MA/MSB–417 (ODSA) and notice of APL's planned transfer of Maritime Security Program Operating Agreements MA/MSP–1 through MA/MSP–9 (MSP) to American Ship Management, LLC (ASM). The proposed transfer would be effectuated immediately prior to the effective time of the proposed merger of APL Limited (Limited) and Neptune U.S.A., Inc. pursuant to the Agreement and Plan of Merger dated as of April 13, 1997 among Limited, Neptune Orient Lines, Ltd. and Neptune U.S.A., Inc. (Merger).

More particularly, the approval, findings and determinations requested include those that may be deemed necessary under statute, regulation or contract in order:

1. For APL (or the corporate affiliate(s) of APL holding title) to transfer title to all vessels currently operated under the ODSA and to be operated under MSP Operating Agreements to an Owner Trustee;
2. For APL to transfer the ODSA and MSP to ASM;
3. For the owner trustee to bareboat charter the ODS Vessels to ASM for operation by ASM under the ODSA for the remaining term of the ODSA, and to bareboat charter the MSP vessels to ASM for the term of the MSP Operating Agreements; and
4. For ASM to time charter the ODS Vessels to APL for the remaining term of the ODSA and to time charter the MSP vessels to APL for the term of the MSP Operating Agreements.

APL considers it important to make clear that although effectuation of the proposed transfer of the ODSA is conditioned on transfer of APL's MSP Operating Agreements to ASM—the proposed transfer of the MSP Operating Agreements *is not* conditioned on grant of the instant application to transfer the ODSA. Accordingly, in the event that MARAD should not grant the instant application to transfer the ODSA, APL alternatively requests that MARAD expressly consent to APL's termination of the ODSA, pursuant to Article II–25 thereof, immediately prior to the effective time of the Merger.

ASM by letter dated June 30, 1997, filed an application in support of APL's June 25, 1997 application with respect to the transfer of APL's ODSA and MSP Operating Agreements to ASM. It is ASM's belief that ASM's application, which, in part, incorporates by reference certain portions of APL's November 7, 1996 application for participation in the MSP, provides MARAD the information as to ASM required for action by MARAD on the application to transfer APL's ODSA to ASM (in addition to providing the requisite information to support MARAD permission for the transfer to ASM of the MSP Operating Agreements).

ASM requests that MARAD:

1. Allow such transfers to become effective in accordance with such application and pursuant to law; and
2. Take any and all actions that MARAD may deem necessary or appropriate in order to confirm and/or effectuate ASM's participation in the MSP as transferee of the MSP Operating Agreements.

This notice, which is published entirely as a matter of discretion, invites comments on maritime policy issues that may be raised by APL/ASM's proposal relating to transfer of the ODS and MSP contracts to ASM. This application may be inspected in the Office of the Secretary, Maritime Administration. Any person, firm, or corporation having any interest in such request and desiring to submit comments concerning the application must file written comments in triplicate with the Secretary, Maritime Administration, Room 7210, Nassif Building, 400 Seventh Street SW., Washington, D.C. 20590. Comments must be received no later than 5:00 p.m. on July 23, 1997. This notice is published as a matter of discretion and the fact of its publication should in no way be considered a favorable or unfavorable decision on the application, as filed or as may be amended. The Maritime Subsidy Board/Maritime Administrator will consider any comments submitted and take such action with respect thereto as may be deemed appropriate.

By Order of the Maritime Administration.

Dated: July 3, 1997.

Joel C. Richard,

Secretary, Maritime Administration.

[FR Doc. 97–18048 Filed 7–8–97; 8:45 am]

BILLING CODE 4910–81–P

DEPARTMENT OF TRANSPORTATION

Surface Transportation Board

Notice of Public Information Collection Submitted to OMB for Review

AGENCY: Surface Transportation Board.

ACTION: Extension of a currently approved collection.

SUMMARY: The Surface Transportation Board has submitted to the Office of Management and Budget for review and approval the following proposal for collection of information as required by the Paperwork Reduction Act of 1995, Pub. L. 104–13 (44 U.S.C. Chapter 35).

OMB Form Number: 2140–0003.

Title: Financial Assistance of Railroad Lines.

No. of Respondents: 15.

Total Annual Hours: 625.

Title: System Diagram Maps.

No. of Respondents: 75.

Total Annual Hours: 2,400.

DATES: Persons wishing to comment on this information collection should submit comments by September 8, 1997.

ADDRESSES: Direct all comments to Case Control, Surface Transportation Board, Room 706, 1925 K Street, NW, Washington, DC 20423. When submitting comments refer to the OMB number and title of the information collection.

FOR FURTHER INFORMATION CONTACT: Charles L. Renninger, (202) 565–1631. Requests for copies of the information collection may be obtained by contacting Ellen R. Keys, Forms Clearance Officer, (202) 565–1654.

SUPPLEMENTARY INFORMATION: The Surface Transportation Board is, by statute, responsible for the economic regulation of surface transportation carriers operating in interstate and foreign commerce. The ICC Termination Act of 1995, Pub. L. No. 104–88, 109 Stat. 803 (1995), which took effect on January 1, 1996 abolished the Interstate Commerce Commission and transferred the responsibility for regulating rail transportation, including the proposed abandonment and discontinuance of rail lines, to the Surface Transportation Board.

The Board needs, in abandonment proceedings, information concerning offers of financial assistance. Respondents are those making offers.

The regulations and reporting requirements relate to the filing of system diagram maps by railroads. The rules are necessary for the Board to learn what lines are contemplated for abandonment. Respondents are railroads.

Dated: July 1, 1997.

Vernon A. Williams,

Secretary.

[FR Doc. 97–17949 Filed 7–8–97; 8:45 am]

BILLING CODE 4915–00–P

DEPARTMENT OF TRANSPORTATION

Surface Transportation Board

[STB Finance Docket No. 33416]

The Burlington Northern and Santa Fe Railway Company; Trackage Rights Exemption; Union Pacific Railroad Company

Union Pacific Railroad Company (UP) has agreed to grant overhead trackage rights to The Burlington Northern and Santa Fe Railway Company (BNSF) over trackage located between a point in Houston, TX, near UP's milepost 377.98 (Gulf Coast Jct.), and a point in Beaumont, TX, near UP's milepost 458.69, a distance of approximately 80.7 miles.

The transaction is expected to be consummated on June 26, 1997, the effective date of the exemption.

The purpose of the trackage rights is to improve UP's and BNSF's operating efficiencies.

As a condition to this exemption, any employees affected by the trackage rights will be protected by the conditions imposed in *Norfolk and Western Ry. Co.—Trackage Rights—BN,* 354 I.C.C. 605 (1978), as modified in *Mendocino Coast Ry., Inc.—Lease and Operate,* 360 I.C.C. 653 (1980).

This notice is filed under 49 CFR 1180.2(d)(7). If the notice contains false or misleading information, the exemption is void *ab initio.* Peitions to revoke the exemption under 49 U.S.C. 10502(d) may be filed at any time. The filing of a petition to revoke will not stay the transaction.

An original and 10 copies of all pleadings, referring to STB Finance Docket No. 33416, must be filed with the Surface Transportation Board, Office of the Secretary, Case Control Unit, 1925 K Street, NW., Washington, DC 20423–0001. In addition, a copy of each pleading must be served on Michael E. Roper, Senior General Attorney, The Burlington Northern and Santa Fe Railway Company, 3017 Lou Menk Drive, P.O. Box 961039, Fort Worth, TX 76161–0039.

Decided: June 27, 1997.

By the Board, David M. Konschnik, Director, Office of Proceedings.

Vernon A. Williams,

Secretary.

[FR Doc. 97–17862 Filed 7–8–97; 8:45 am]

BILLING CODE 4915–00–M

DEPARTMENT OF TRANSPORTATION

Surface Transportation Board

[STB Finance Docket No. 33418]

The Texas Mexican Railway Company; Trackage Rights Exemption; Southern Pacific Transportation Company

Southern Pacific Transportation Company (SP) has agreed to grant bridge trackage rights to The Texas Mexican Railway Company over trackage located between a point in Houston, TX, at or near SP's milepost 360.42, and a point in Beaumont, TX, at or near SP's milepost 282.4, a distance of approximately 78.02 miles.

The transaction is expected to be consummated on June 26, 1997, the effective date of the exemption.

The purpose of the trackage rights is to enable SP to implement directional operations between Houston and Beaumont.

As a condition to this exemption, any employees affected by the trackage

rights will be protected by the conditions imposed in *Norfolk and Western Ry. Co.—Trackage Rights—BN,* 354 I.C.C. 605 (1978), as modified in *Mendocino Coast Ry., Inc.—Lease and Operate,* 360 I.C.C. 653 (1980).

This notice is filed under 49 CFR 1180.2(d)(7). If the notice contains false or misleading information, the exemption is void *ab initio.* Petitions to revoke the exemption under 49 U.S.C. 10502(d) may be filed at any time. The filing of a petition to revoke will not stay the transaction.

An original and 10 copies of all pleadings, referring to STB Finance Docket No. 33418, must be filed with the Surface Transportation Board, Office of the Secretary, Case Control Unit, 1925 K Street, N.W., Washington, DC 20423–0001. In addition, a copy of each pleading must be served on Richard A. Allen, Zuckert, Scoutt & Rasenberger LLP, 888 17th Street, NW., Suite 600, Washington, DC 20006–3959.

Decided: June 27, 1997.

By the Board, David M. Konschnik, Director, Office of Proceedings.

Vernon A. Williams,

Secretary.

[FR Doc. 97–17861 Filed 7–8–97; 8:45 am]

BILLING CODE 4915–00–M

DEPARTMENT OF THE TREASURY

Departmental Offices; Rechartering of the Treasury Borrowing Committee of the Public Securities Association

AGENCY: Treasury Department, Departmental Offices.

ACTION: Notice of determination of necessity for renewal of the Treasury Borrowing Advisory Committee of the Public Securities Association.

SUMMARY: It is in the public interest to continue the existence of the Treasury Borrowing Advisory Committee of the Public Securities Association.

The Department of the Treasury announces that the charter of the Treasury Borrowing Advisory Committee of the Public Securities Association (the ''Committee'') has been renewed in accordance with the Federal Advisory Committee Act, 5 U.S.C. App. I.

The Secretary of the Treasury has determined that the renewal of this Committee is necessary and in the public interest. This determination follows consultation with the Committee Management Secretariat, General Services Administration.

Purpose. The Committee provides informed advice as representatives of the financial community to the Secretary of the Treasury and Treasury staff, upon the Secretary of the Treasury's request, in carrying out Federal financing and in the management of the public debt.

Scope. The Committee meets at the request of the Secretary and is presented with a list of items on which its advice is sought. It is usually requested to consider the current midquarter refunding operation and to provide expert advice on financing options for the entire current quarter and on longer term debt management policies. In addition to the regular quarterly meetings, the Committee may be requested to hold a special meeting to discuss debt management issues that are broader in scope.

The portion of meetings at which the Treasury presents background information on the federal debt, the financial markets, and the economic conditions are open to the public. The parts at which the Committee discusses specific subjects raised in the Treasury request and makes its recommendations are closed to the public because the Committee's activities fall within the exemption covered by law for information that would ''lead to significant financial speculation in the securities markets'' (5 U.S.C. 552b(c)(9)(A)(i)). A similar exception to the open meeting format is included in the provision in the Government Securities Act Amendments of 1993 (31 U.S.C. 3121 note) that generally provides for open meetings.

The day before the Committee convenes for its regular quarterly 2-day meeting, the Treasury releases to the public an updated estimate of Treasury borrowing requirements and other background information on the Treasury debt. The Treasury releases to the public each written report of the Committee, and minutes of each meeting prepared by the Treasury employee who attends, at the press conference announcing each midquarter refunding.

Membership consists of 20–25 members who are experts in government securities markets and who are involved in senior positions in debt markets as investors, investment advisors, or as dealers in debt securities. They are appointed by the Committee in consultation with the Treasury. Members must be highly competent, experienced, and actively involved in financial markets. Effort is made to get regional representation so that Committee views are a reasonable proxy for nationwide views. As far as possible, balance between dealers and investors is sought. The membership changes from time to time, reflecting changes in their employment and interests. This provides for a rotation of membership in areas where more than one qualified candidate may be available.

Statement of Public Interest. It is in the public interest to continue the existence of the Treasury Borrowing Advisory Committee of the Public Securities Association. The Secretary of the Treasury, with the concurrence of the General Services Administration, has also approved renewal of the Committee.

Authority for this Committee will expire two years from the date the charter is filed with the appropriate Congressional committees, unless prior to the expiration of its charter, the Committee is renewed.

The Assistant Secretary (Management) has determined that this document is not a major rule as defined in Executive Order 12291 and that a regulatory impact analysis therefore is not required. Neither does this document constitute a rule subject to the Regulatory Flexibility Act (5 U.S.C. Chapter 6).

In accordance with the Federal Advisory Committee Act (5 U.S.C. App. I), the Department of the Treasury has renewed the charter of the Treasury Borrowing Advisory Committee of the Public Securities Association. The Committee members are:

Daniel S. Ahearn, President, Capital Markets Strategies Co., 50 Congress Street, Ste. 816, Boston, MA 02109

James R. Capra, President, Capra Asset Management, Inc., 555 Theodore Fremd Avenue Ste. C–204, Rye, NY 10580

Kenneth M. DeRegt, Managing Director, Morgan Stanley & Co., Incorporated, 1585 Broadway, New York, NY 10036

Stephen C. Francis, Managing Director, Fischer, Francis, Trees & Watts, Inc., 200 Park Avenue, 46th Fl., New York, NY 10166

Lisa W. Hess, Managing Director, Zesiger Capital Group LLC, 320 Park Avenue, New York, NY 10022

Gedale B. Horowitz, Senior Managing Director, Salomon Brothers, Inc., 7 World Trade Center, 39th Fl., New York, NY 10048

Timothy W. Jay, Managing Director, Lehman Government Securities, Inc., 3 World Financial Center, New York, NY 10285–0900

London Office: 1 Broadgate, 3rd Floor, London EC2M 7HA England

Thomas L. Kalaris, President, BZW Securities Inc., 222 Broadway, New York, NY 10038

Richard Kelly, Chairman of the Board, Aubrey G. Lanston & Co., Inc., One Chase Manhattan Plaza, 53rd Fl., New York, NY 10005

Barbara Kenworthy, Managing Director of Mutual Funds—Taxable, Prudential Insurance, McCarter Highway 2 Gateway Center, 7th Floor, Newark, NJ 07102–5029

Mark F. Kessenich, Jr., Managing Director, Eastbridge Capital, Inc., 308 Royal Poinciana Plaza, Palm Beach, FL 33480

Richard D. Lodge, President, Banc One Funds Management Company, 150 E. Gay Street, 24th Floor, P.O. Box 432710138, Columbus, OH 43271–0138

Wayne D. Lyski, Chairman & Chief Investment Officer, Alliance Fixed Income Investors, Alliance Capital, Management Corporation, 1345 Avenue of the Americas, New York, NY 10105

Robert D. McKnew, Executive Vice President, Bank of America 555 California Street, 10th Fl., San Francisco, CA 94104

Michael P. Mortara, Partner, Co-head Fixed Income Division, Goldman-Sachs & Co., 85 Broad Street, 26th Floor, New York, NY 10004

Daniel T. Napoli, Senior Vice President, Merrill Lynch & Company 250 Vesey Street, North Tower, World Financial Ctr, 8th Fl., New York, NY 10281

William H. Pike, Managing Director, Chase Securities Inc., 270 Park Avenue, New York, NY 10017

Richard B. Roberts, Executive Vice President, Wachovia Bank & Trust Co., NA, P.O. Box 3099, Winston-Salem, NC 27150

Joseph Rosenberg, President, Lawton General Corporation, 667 Madison Avenue, New York, NY 10021–8087

Morgan B. Stark, Principal, Ramius Capital Group, 40 West 57th Street, 15th Fl., New York, NY 10019

Stephen Thieke, Chairman, Market Risk Committee, JP Morgan & Company, Inc., 60 Wall Street, 20th Floor, New York, NY 10260

Craig M. Wardlaw, Executive Vice President, Nations Bank Corporation, Nations Bank Corporate Center, Mail Code NCI 007–0606, Charlotte, NC 28255–0001

Dated: July 2, 1997.

George Muñoz,

Assistant Secretary (Management) and Chief Financial Officer.

[FR Doc. 97–17787 Filed 7–8–97; 8:45 am]

BILLING CODE 4810–25–U

Corrections

Federal Register

Vol. 62, No. 131

Wednesday, July 9, 1997

This section of the FEDERAL REGISTER contains editorial corrections of previously published Presidential, Rule, Proposed Rule, and Notice documents. These corrections are prepared by the Office of the Federal Register. Agency prepared corrections are issued as signed documents and appear in the appropriate document categories elsewhere in the issue.

DEPARTMENT OF COMMERCE

National Oceanic and Atmospheric Administration

50 CFR Part 285

[Docket No. 970626157-7157-01; I.D. 041697C]

RIN 0648-AJ65

Atlantic Tuna Fisheries; Atlantic Bluefin Tuna Effort Controls

Correction

In proposed rule document 97–17534 beginning on page 36040 in the issue of Thursday, July 3, 1997, make the following correction:

On page 36040, in the second column, in the **DATES** section, in the second line, ''July 17, 1997'' should read ''July 14, 1997''.

BILLING CODE 1505-01-D

DEPARTMENT OF THE INTERIOR

Bureau of Land Management

[CA-942-5700-00]

Filing of Plats of Survey; California

Correction

In notice document 97–17048 appearing on page 35222 in the issue of Monday, June 30, 1997, make the following correction:

On page 35222, in the second column, under **FOR FURTHER INFORMATION CONTACT:**, in the fourth line, ''2138'' should read ''2135''.

BILLING CODE 1505-01-D

federal register

Wednesday
July 9, 1997

Part II

Office of Management and Budget

Recommendations From the Interagency Committee for the Review of the Racial and Ethnic Standards to the Office of Management and Budget Concerning Changes to the Standards for the Classification of Federal Data on Race and Ethnicity; Notice

OFFICE OF MANAGEMENT AND BUDGET

Recommendations From the Interagency Committee for the Review of the Racial and Ethnic Standards to the Office of Management and Budget Concerning Changes to the Standards for the Classification of Federal Data on Race and Ethnicity

AGENCY: Executive Office of the President, Office of Management and Budget (OMB), Office of Information and Regulatory Affairs.

ACTION: Notice and request for comments.

SUMMARY: OMB requests comments on the recommendations that it has received from the Interagency Committee for the Review of the Racial and Ethnic Standards (Interagency Committee) for changes to OMB's Statistical Policy Directive No. 15, Race and Ethnic Standards for Federal Statistics and Administrative Reporting (See Appendix 1 for the text of the standards in Directive No.15, originally issued in 1977). The Interagency Committee's report and recommendations, which are published in Appendix 2 in their entirety, are the result of a four-year, comprehensive review of the current standards.

DATES: To ensure consideration during the final decision making process, written comments must be provided to OMB no later than September 8, 1997.

ADDRESSES: Written comments on the recommendations may be addressed to Katherine K. Wallman, Chief Statistician, Office of Information and Regulatory Affairs, Office of Management and Budget, NEOB, Room 10201, 725 17th Street, N.W., Washington, D.C. 20503.

Comments may also be submitted by facsimile to 202–395–7245, or by electronic mail to OMBDIR15@A1.EOP.GOV (please note that ''1'' in ''A1'' is the number one and not the letter ''l''). Be sure to include your name and complete postal mailing address in the comments sent by electronic mail. If you submit comments by facsimile or electronic mail, please do not also submit them by regular mail.

Electronic availability and addresses: This **Federal Register** notice, as well as the June 9, 1994 and the August 28, 1995 **Federal Register** notices related to the review, are available electronically from the OMB Homepage on the World Wide Web: <<http://www.whitehouse.gov/WH/EOP/OMB/html/fedreg.html>>, and in paper copy from the OMB Publications Office, 727, 17th Street, NW., NEOB, Room 2200, Washington, D.C. 20503, telephone: (202) 395–7332, facsimile: (202) 395–6137.

FOR FURTHER INFORMATION CONTACT: Suzann Evinger, Statistical Policy Office, Office of Information and Regulatory Affairs, Office of Management and Budget, NEOB, Room 10201, 725 17th Street, N.W., Washington, D.C. 20503. Telephone: 202–395–3093.

SUPPLEMENTARY INFORMATION:

A. Background

The current standards were developed in cooperation with the Federal agencies to provide consistent and comparable data on race and ethnicity throughout the Federal government for an array of statistical and administrative programs. Development of the data standards stemmed in large measure from new responsibilities to enforce civil rights laws. Data were needed to monitor equal access to housing, education, employment opportunities, etc., for population groups that historically had experienced discrimination and differential treatment because of their race or ethnicity. The categories that were developed represent a political-social construct designed to be used in the collection of data on the race and ethnicity of major broad population groups in this country, and are not anthropologically or scientifically based. The standards are used not only in the decennial census (which provides the ''denominator'' for many measures), but also in household surveys, on administrative forms (e.g., school registration and mortgage lending applications), and in medical and other research.

The standards provide a *minimum* set of categories for data on race and ethnicity. The current standards have four categories for data on race (American Indian or Alaskan Native, Asian or Pacific Islander, Black, and White) and two categories for data on ethnicity (''Hispanic origin'' and ''Not of Hispanic origin''). The standards also permit the collection of more detailed information on population groups provided that any additional categories can be aggregated into the minimum standard set of categories. Self-identification is the preferred means of obtaining information about an individual's race and ethnicity, except in instances where observer identification more practical (e.g., completing a death certificate).

The categories in Directive No. 15 do *not* identify or designate certain population groups as ''minority groups.'' As the Directive explicitly states, these categories are *not* to be used for determining the eligibility of population groups for participation in any Federal programs. Directive No. 15 does *not* establish criteria or qualifications (such as blood quantum levels) that are to be used in determining a particular individual's racial or ethnic classification. Directive No. 15 does *not* tell an individual who he or she is, or specify how an individual should classify himself or herself.

B. Review Process

Particularly since the 1990 census, the standards have come under increasing criticism from those who believe that the minimum categories set forth in Directive No. 15 do not reflect the increasing diversity of our Nation's population that has resulted primarily from growth in immigration and in interracial marriages. In response to the criticism, OMB announced in July 1993 that it would undertake a comprehensive review of the current categories for data on race and ethnicity.

This review has been conducted over the last four years in collaboration with the Interagency Committee for the Review of the Racial and Ethnic Standards, which OMB established in March 1994 to facilitate the participation of Federal agencies in the review. The members of the Interagency Committee, from more than 30 agencies, represent the many and diverse Federal needs for data on race and ethnicity, including statutory requirements for such data.

The principal objective of the review is to enhance the accuracy of the demographic information collected by the Federal Government. The starting point for the review was the current minimum set of categories for data on race and ethnicity that have provided 20 years of information for a variety of purposes, and the recognition of the importance of being able to maintain this historical continuity. The review process has had two major elements: (1) Public comment on the present standards, which helped to identify concerns and provided numerous suggestions for changing the standards; and (2) research and testing related to assessing the possible effects of suggested changes on the quality and usefulness of the resulting data.

Public input, the first element of the review process, was sought through a variety of means: (1) During 1993, Congressman Thomas C. Sawyer, then Chairman of the House Subcommittee on Census, Statistics, and Postal, held four hearings that included 27 witnesses, focusing particularly on the

use of the categories in the 2000 census, (2) At the request of OMB, the National Academy of Sciences' Committee on National Statistics (CNSTAT) conducted a workshop in February 1994 to articulate issues surrounding a review of the categories. The workshop included representatives of Federal agencies, academia, social science research institutions, interest groups, private industry, and a local school district. (A summary of the workshop, *Spotlight on Heterogeneity: The Federal Standards for Racial and Ethnic Classification,* is available from CNSTAT, 2101 Constitution Avenue, N.W., Washington, D.C. 20418.) (3) On June 9, 1994, OMB published a **Federal Register** (59 FR 29831–29835) notice that contained background information on the development of the current standards and requested public comment on: the adequacy of current racial and ethnic categories; the principles that should govern any proposed revisions to the standards; and specific suggestions for change that had been offered by individuals and interested groups over the past several years. In response, OMB received nearly 800 letters. As part of this comment period and to bring the review closer to the public, OMB also heard testimony from 94 witnesses at hearings held during 1994 in Boston, Denver, San Francisco, and Honolulu. (4) In an August 28, 1995, **Federal Register** (60 FR 44674–44693) notice, OMB provided an interim report on the review process, including a summary of the comments of the June 1994 **Federal Register** notice, and offered a final opportunity for comment on the research to be conducted during 1996. (5) OMB staff have also made themselves available to discuss the review process with various interested groups and have made presentations at many meetings.

The second element of the review process involved research and testing of various proposed changes. The categories in OMB's Directive No. 15 are used not only to produce data on the demographic characteristics of the population, but also for civil rights enforcement and program administration. Research would enable an objective assessment of the data quality issues associated with various approaches to collecting data on race and ethnicity. For that reason, the Interagency Committee's Research Working Group on Racial and Ethnic Standards, which is co-chaired by the Bureau of the Census and the Bureau of Labor Statistics, reviewed the various criticisms and suggestions for changing the current categories, and developed a research agenda for some of the more significant issues that had been identified. These issues included collecting and classifying data on persons who identify themselves as ''multiracial''; combining race and Hispanic origin in one question or having separate questions on race and Hispanic origin; combining the concepts of race, ethnicity, and ancestry; changing the terminology used for particular categories; and adding new categories to the current minimum set.

Because the mode of data collection can have an effect on how a person responds, the research agenda addressed the issue of how an individual responds when an interviewer collects the information (in an in-person interview or a telephone interview) versus how an individual responds in a self-administered situation, such as in the decennial census when a form is filled out and mailed back. In addition, cognitive research interviews were conducted with various groups to provide guidance on the wording of the questions and the instructions.

The research agenda included several major national tests during the last two years, the results of which are discussed throughout the Interagency Committee's report: (1) In May 1995, the Bureau of Labor Statistics (BLS) sponsored a Supplement on Race and Ethnicity to the Current Population Survey (CPS). The findings were made available in a 1996 report, *Testing Methods of Collecting Racial and Ethnic Information: Results of the Current Population Survey Supplement on Race and Ethnicity*, available from BLS, 2 Massachusetts Avenue, NE., Room 4915, Postal Square Building, Washington, DC 20212, by calling 202–606–7375. The results were also summarized in an October 26, 1995, news release, which is available electronically at <<http://stats.bls.gov/news.release/ethnic.toc.htm>>. (2) The Bureau of the Census, as part of its research for the 2000 census, tested alternative approaches to collecting data on race and ethnicity in the March 1996 National Content Survey (NCS). The Census Bureau published the results in a December 1996 report, *Findings on Questions on Race and Hispanic Origin Tested in the 1996 National Content Survey*; highlights of the report are available at <<http://www.census.gov/population/www/socdemo/96natcontentsurvey.html>>. (3) In June 1996, the Census Bureau conducted the Race and Ethnic Targeted Test (RAETT), which was designed to permit assessments of effects of possible changes on smaller populations not reliably measured in national samples, including American Indians, Alaska Natives, detailed Asian and Pacific Islander groups (such as Chinese and Hawaiians) and detailed Hispanic groups (such as Puerto Ricans and Cubans). The Census Bureau released the results in a May 1997 report, *Results of the 1996 Race and Ethnic Targeted Test*; highlights of the report are available at <<http://www.census.gov/population/www/documentation/twps–0018.html>>. Single copies (paper) of the NCS and RAETT reports may be obtained from the Population Division, U.S. Bureau of the Census, Washington, DC 20233; telephone 301–457–2402.

In addition to these three major tests, the National Center for Education Statistics (NCES) and the Office for Civil Rights in the Department of Education jointly conducted a survey of 1,000 public schools to determine how schools collect data on the race and ethnicity of their students and how the administrative records containing these data are maintained to meet statutory requirements for reporting aggregate information to the Federal Government. NCES published the results in a March 1996 report, *Racial and Ethnic Classifications Used by Public Schools.* The report is available electronically at <<http://www.ed.gov/NCES/pubs/98092.html>>. Single paper copies may be obtained from NCES, 555 New Jersey, NW., Washington, DC 20208–5574, or by calling 202–219–1442.

The research agenda also included studies conducted by the National Center for Health Statistics, the Office of the Assistant Secretary for Health, and the Centers for Disease Control and Prevention to evaluate the procedures used and the quality of the information in administrative records on race and ethnicity such as that reported on birth certificates and recorded on death certificates. Since these data are used in studies of diseases and of the health and well-being of major population groups, these studies investigated possible impacts of suggested changes on data needed for medical and health research.

C. Overview of Interagency Committee Report

This **Federal Register** notice makes available for comment the Interagency Committee's recommendations for how OMB should revised Directive No. 15. These recommendations are elaborated in the Interagency Committee's *Report to the Office of Management and Budget on the Review of Statistical Policy Directive No. 15* which is published in its entirety as part of this notice. The report consists of six chapters. Chapter 1 provides a brief history of Directive No. 15, a summary of the issues

considered by the Interagency Committee, a review of the research activities, and a discussion of the criteria used in conducting the evaluation. Chapter 2 discusses a number of general concerns that need to be addressed when considering any changes to the current standards. Chapters 3 through 5 report the results of the research as they bear on the more significant suggestions OMB received for changes to Directive No. 15. Chapter 6 gives the Interagency's Committee's recommendations concerning the various suggested changes based on a review of public comments and testimony and the research results.

This notice affords a final opportunity for the public to comment before OMB acts on the recommendations of the Interagency Committee. None of the recommendations has been adopted and no interim decisions have been made concerning them. OMB can modify or reject any of the recommendations, and OMB has the option of making no changes. The report and its recommendations are published in this Notice because OMB believes that they are worthy of public discussion and the OMB's decision will benefit from obtaining the public's views on the recommendations. OMB will announce its decision in mid-October 1997, so that changes, *if any*, can be incorporated into the questions for the 2000 census ''dress rehearsal,'' which will be conducted in spring 1998.

Issues for Comment

With this notice, OMB, requests comments on the recommendations it has received from the Interagency Committee for the Review of the Racial and Ethnic Standards concerning the revision of Statistical Policy Directive No. 15. These recommendations are contained in Chapter 6 of the Interagency Committee's report.

The complete report is included in this Notice because Chapters 1 through 5 provide both a context and the bases for the Interagency Committee's recommendations outlined in Chapter 6. As an aid in evaluating the recommendations, readers may wish to refer to the set of general principles (see Chapter 1) that were developed at the beginning of the Directive No. 15 review to govern the process—a process that has attempted to balance statistical issues, needs for data, social concerns, and the personal dimensions of racial and ethnic identification. The committee recognized that these principles may in some cases represent competing goals for the standard. For example, having categories that are comprehensive in the coverage of our National's diverse population (Principle 4) and that would facilitate self-identification (Principle 2) may not be operationally feasible in terms of the burden that would be placed upon respondents and the public and private costs that would be associated with implementation (Principle 8). The following are just a few examples of questions that might be considered in assessing the recommendations using the general principles:

—Do the recommendations provide categories for classifying data on race and ethnicity that are: generally understood and accepted by the public (Principle 3); comprehensive in coverage (Principle 4); and useful for statistical analysis, and for Federal statutory and programmatic requirements (Principles 5 and 6)?

—Are the recommendations based on sound methodological research (Principle 9)?

—Do the recommendations take into account continuity of historical data series (Principle 10)?

As reflected in the general principles, the goal has been to produce a standard that would result in consistent, publicly accepted data on race and ethnicity which will meet the needs of the Federal Government and the public, while recognizing the diversity of the population and respecting the individual's dignity. We would appreciate receiving your views and comments on any aspects of the Interagency Committee's recommendations, as well as on the extent to which the recommendations were successful in meeting the goals of the governing principles.

Sally Katzen,

Administrator, Office of Information and Regulatory Affairs.

[Directive No. 15]

Appendix 1—Race and Ethnic Standards for Federal Statistics and Administrative Reporting

[as adopted on May 12, 1977]

This Directive provides standard classifications for record keeping, collection, and presentation of data on race and ethnicity in Federal program administrative reporting and statistical activities. These classifications should not be interpreted as being scientific or anthropological in nature, nor should they be viewed as determinants of eligibility for participation in any Federal program. They have been developed in response to needs expressed by both the executive branch and the Congress to provide for the collection and use of compatible, nonduplicated, exchangeable racial and ethnic data by Federal agencies.

1. Definitions

The basic racial and ethnic categories for Federal statistics and program administrative reporting are defined as follows:

a. *American Indian or Alaskan Native.* A person having origins in any of the original peoples of North America, and who maintains cultural identification through tribal affiliation or community recognition.

b. *Asian or Pacific Islander.* A person having origins in any of the original peoples of the Far East, Southeast Asia, the Indian subcontinent, or the Pacific Islands. This area includes, for example, China, India, Japan, Korea, the Philippine Islands, and Samoa.

c. *Black.* A person having origins in any of the black racial groups of Africa.

d. *Hispanic.* A person of Mexican, Puerto Rican, Cuban, Central or South American or other Spanish culture or origin, regardless of race.

e. *White.* A person having origins in any of the original peoples of Europe, North Africa, or the Middle East.

2. Utilization for Record keeping and Reporting

To provide flexibility, it is preferable to collect data on race and ethnicity separately. If separate race and ethnic categories are used, the minimum designations are:

a. *Race:*

—American Indian or Alaskan Native
—Asian or Pacific Islander
—Black
—White

b. *Ethnicity:*

—Hispanic origin
—Not of Hispanic origin

When race and ethnicity are collected separately, the number of White and Black persons who are Hispanic must be identifiable, and capable of being reported in that category.

If a combined format is used to collect racial and ethnic data, the minimum acceptable categories are:

—American Indian or Alaskan Native
—Asian or Pacific Islander
—Black, not of Hispanic origin
—Hispanic
—White, not of Hispanic origin.

The category which most closely reflects the individual's recognition in his community should be used for purposes of reporting on persons who are of mixed racial and/or ethnic origins.

In no case should the provisions of this Directive be construed to limit the collection of data to the categories

described above. However, any reporting required which uses more detail shall be organized in such a way that the additional categories can be aggregated into these basic racial/ethnic categories.

The minimum standard collection categories shall be utilized for reporting as follows:

a. *Civil rights compliance reporting.* The categories specified above will be used by all agencies in either the separate or combined format for civil rights compliance reporting and equal employment reporting for both the public and private sectors and for all levels of government. Any variation requiring less detailed data or data which cannot be aggregated into the basic categories will have to be specifically approved by the Office of Management and Budget (OMB) for executive agencies. More detailed reporting which can be aggregated to the basic categories may be used at the agencies' discretion.

b. *General program administrative and grant reporting.* Whenever an agency subject to this Directive issues new or revised administrative reporting or record keeping requirements which include racial or ethnic data, the agency will use the race/ethnic categories described above. A variance can be specifically requested from OMB, but such a variance will be granted only if the agency can demonstrate that it is not reasonable for the primary reporter to determine the racial or ethnic background in terms of the specified categories, and that such determination is not critical to the administration of the program in question, or if the specific program is directed to only one or a limited number of race/ethnic groups, e.g., Indian tribal activities.

c. *Statistical reporting.* The categories described in this Directive will be used at a minimum for federally sponsored statistical data collection where race and/or ethnicity is required, except when: the collection involves a sample of such size that the data on the smaller categories would be unreliable, or when the collection effort focuses on a specific racial or ethnic group. A repetitive survey shall be deemed to have an adequate sample size if the racial and ethnic data can be reliably aggregated on a biennial basis. Any other variation will have to be specifically authorized by OMB through the reports clearance process. In those cases where the data collection is not subject to the reports clearance process, a direct request for a variance should be made to OMB.

3. Effective Date

The provisions of this Directive are effective immediately for all *new* and *revised* record keeping or reporting requirements containing racial and/or ethnic information. All *existing* record keeping or reporting requirements shall be made consistent with this Directive at the time they are submitted for extension, or not later than January 1, 1980.

4. Presentation of Race/Ethnic Data

Displays of racial and ethnic compliance and statistical data will use the category designations listed above. The designation ''nonwhite'' is not acceptable for use in the presentation of Federal Government data. It is not to be used in any publication of compliance or statistical data or in the text of any compliance or statistical report.

In cases where the above designations are considered inappropriate for presentation of statistical data on particular programs or for particular regional areas, the sponsoring agency may use:

(1) The designations ''Black and Other Races'' or ''All Other Races'', as collective descriptions of minority races when the most summary distinction between the majority and minority races is appropriate;

(2) The designations ''White,'' ''Black,'' and ''All Other Races'' when the distinction among the majority race, the principal minority race and other races is appropriated; or

(3) The designation of a particular minority race or races, and the inclusion of ''Whites'' with ''All Other Races'', if such a collective description is appropriate.

In displaying detailed information which represents a combination of race and ethnicity, the description of the data being displayed must clearly indicate that both bases of classification are being used.

When the primary focus of a statistical report is on two or more specific identifiable groups in the population, one or more of which is racial or ethnic, it is acceptable to display data for each of the particular groups separately and to describe data relating to the reminder of the population by an appropriate collective description.

Appendix 2—Report to the Office of Management and Budget on the Review of Statistical Policy Directive No. 15

Prepared By Interagency Committee for the Review of the Racial and Ethnic Standards

(Transmittal Memorandum)

May 28, 1997.

Memorandum for Katherine K. Wallman

Chief Statistician, Office of Management and Budget.

From: Interagency Committee for the Review of the Racial and Ethnic Standards.

Subject: Transmittal of Report and Recommendations on the Review of Directive No. 15.

We are pleased to transmit to you the attached report that provides the recommendations of the Interagency Committee for the Review of the Racial and Ethnic Standards for modifying OMB's Statistical Policy Directive No. 15, Race and Ethnic Standards for Federal Statistics and Administrative Reporting. These recommendations, which are outlined in Chapter 6 of the report, represent our best technical and professional advice for how these data standards could better reflect the increasing racial and ethnic diversity of our Nation's population, while maintaining historical continuity.

Our recommendations for Directive No. 15 are the product of a three-year review process that is briefly described in Chapter 1 of the report. During that time, we developed and carried out a research program to evaluate various proposals for revising the standards. Chapter 2 discusses some general concerns relevant to consideration of any changes in the standards. Chapters 3 through 5 report on the extensive research efforts, including three national tests, that have been conducted to test alternative approaches for questions to collect data on race and ethnicity. The Interagency Committee's recommendations, presented in Chapter 6, are based on our evaluation of the research results and consideration of related public comments and testimony.

We hope that the Office of Management and Budget will find this report with its accompanying recommendations informative and helpful in making its decision on what changes to adopt, if any, in the Federal standards for reporting data on race and ethnicity. Attachment

Report to the Office of Management and Budget on the Review of Statistical Policy Directive No. 15

Table of Contents

Chapter 1. Introduction

1.1 Overview
1.2 History of Directive No. 15
1.3 Concerns About the Current Standards
1.4 Principles for the Review Process
1.5 Overview of Research Activities
1.6 Evaluation of Research Results

Chapter 2. Issues of General Concern

2.1 Overview
2.2 Satisfying Statutory and Program Needs
2.3 Voting Rights Issues
2.4 Data Continuity Concerns
2.5 Financial Costs

Chapter 3. Reporting More Than One Race

3.1 Background
3.2 Current Practice
3.3 Overview of Research on Reporting More Than One Race
3.3.1 Surveys to Explore Options

3.3.2 Cognitive Research to Guide Survey Design
3.4 Evaulating Research on Options for Reporting More Than One Race
3.4.1 Data Comparability
3.4.2 Should a multiracial category be listed among the response options to the question on race?
3.4.3 If a multiracial category is listed, should a ''follow-up'' format be used, in which individuals who select the category are asked to specify their racial identities?
3.4.4 Should a multiple-response format be used, in which the respondent is instructed to ''mark one or more races''?
3.4.5 Should a multiple response format be used in which the respondent is instructed to ''mark all that apply'' on the race question?
3.4.6 Are there other options for reporting more than one race by respondents?
3.5 Trends With Respect to Reporting of Multiple Races
3.5.1 Trends Contributing to Reporting of Multiple Races
3.5.1.1 Increases in Interracial Marriages and Households and Births to Parents of Different Races
3.5.1.2 State Requirements for Multiracial Reporting
3.5.2 Public Sentiment
3.6 Measurement Concerns and Opportunities Related to Reporting More Than One Race
3.6.1 Meeting Legislative and Program Needs
3.6.2 Defining and Using the Term ''Multiracial''
3.6.2.1 Definition of ''Multiracial''
3.6.2.2 Using a Stand-Alone ''Multiracial or Biracial'' Category or Including a Follow-up Question
3.6.3 Using a ''Mark One or More'' or a ''Mark All That Apply'' Instruction in the Race Question
3.6.4 Issues Related to Primary and Secondary Data Collection
3.7 Some Implications of Allowing the Reporting of More Than One Race
3.7.1 Possible Effects on Reporting by Particular Population Groups
3.7.2 Tabulation of Multiple Responses
3.7.3 Monetary Costs and Resource Burdens

Chapter 4. A Combined Race and Hispanic Origin Question

4.1 Background
4.2 Concepts of Race and Ethnicity
4.3 Self-Identification
4.4 Some Alternative Formats for Questions
4.5 Research on Data Quality
4.5.1 Reporting in the ''Other Race'' Category by Hispanics
4.5.2 Item Nonresponse in the Race Question
4.5.3 Item Nonresponse in the Hispanic Origin Question
4.5.4 Reporting Inconsistency
4.6 Measures to Correct Misreporting in the Race Question and the Hispanic Origin Question
4.7 The Effects of Combining the Race Question and the Hispanic Origin Question into a Single Question
4.7.1 Results From the May 1995 CPS Supplement on Race and Ethnic Origin
4.7.2 Results From the Race and Ethnic Targeted Test
4.7.2.1 Reporting of Hispanic Origin
4.7.2.2 Reporting of Multiple Races
4.7.2.3 Summary of Findings
4.8 Public Sentiment
4.9 Additional Cost Concerns

Chapter 5. Other Possible Changes

5.1 Background
5.2 Specific Suggestions
5.3 Evaluation of the Possible Effects of Suggested Changes
5.3.1 Changes related to American Indians and Alaska Natives
5.3.1.1 Should the term ''American Indian'' or ''Native American'' be used?
5.3.1.2 Should the term ''Alaska Native'' or ''Eskimo and Aleut'' be used?
5.3.1.3 Should a distinction be made between federally recognized and nonfederally recognized tribes?
5.3.1.4 What is the best way to elicit tribal affiliation?
5.3.1.5 Should the definition of the ''American Indian or Alaskan Native'' category be changed to include Indians indigenous to Central America and South America?
5.3.2 Changes related to Asian and Pacific Islanders
5.3.2.1 Should the ''Asian or Pacific Islander'' category be split into two categories? If yes, how should this be done?
5.3.2.2 Should specific groups be listed under the Asian or Pacific Islander category?
5.3.2.3 Should the term ''Guamanian'' or ''Chamorro'' be used?
5.3.3 Changes related to Hawaiians
5.3.3.1 Should the term ''Native Hawaiian'' or ''Hawaiian'' be used?
5.3.3.2 Should Hawaiians continue to be included in the ''Asian or Pacific Islander'' category; be reclassified and included in the ''American Indian or Alaskan Native'' category; or be established as a separate, new category?
5.3.4 Other terminology issues
5.3.4.1 Should the term ''Black'' or ''African American'' be used?
5.3.4.2 Should the term ''Hispanic'' or ''Latino'' be used?
5.3.4.3 Should more than one term be used for Black or for Hispanic?
5.3.5 Other new category issues
5.3.5.1 Should an Arab or Middle Eastern category be created and, if so, how should it be defined?
5.3.5.2 Should a Cape Verdean category be created?

Chapter 6. Recommendations and Major Findings

6.1 Summary of Recommendations and Major Findings
6.1.1 Recommendations concerning reporting more than one race
6.1.1.1 Findings concerning a method for reporting more than one race
6.1.1.2 Findings concerning different formats for reporting more than one race
6.1.2 Recommendations concerning a combined race and Hispanic ethnicity question
6.1.2.1 Findings concerning whether race and Hispanic origin should be combined into a single question
6.1.2.2 Findings concerning different formats if race and Hispanic origin are combined in a single question
6.1.3 Recommendations concerning the retention of both reporting formats
6.1.4 Recommendation concerning the ordering of the Hispanic origin and race questions
6.1.5 Recommendation concerning adding Cape Verdean as an ethnic category
6.1.6 Recommendation concerning the addition of an Arab or Middle Eastern ethnic category
6.1.7 Recommendation concerning the addition of any other categories to the minimum set
6.1.8 Recommendation concerning changing the term ''American Indian'' to ''Native American''
6.1.9 Recommendation concerning changing the term ''Hawaiin'' to ''Native Hawaiian.''
6.1.10 Recommendation concerning the classification of Hawaiians
6.1.11 Recommendations concerning the use of Alaskan Native instead of Eskimo and Aleut
6.1.12 Recommendations concerning the classification of South and Central American Indians
6.1.13 Recommendations concerning the term or terms to be used for the name of the Black category
6.1.14 Recommendations concerning the term or terms to be used for Hispanic
6.2 Comparison of the Current Standards with the Recommended Standards
6.2.1 The Current Standards in Directive No. 15
6.2.2 Recommended Standards
6.3 Recommendations for Further Research

Chapter 1. Introduction

1.1 Overview

This report evaluates a variety of proposals for modifying the Office of Management and Budget's (OMB) Statistical Policy Directive No. 15, ''Race and Ethnic Standards for Federal Statistics and Administrative Reporting.'' The Directive sets forth a minimum set of categories for collecting and presenting data on race and Hispanic origin. This basic set of categories has served as the guideline for Federal Government data collections since it was issued in May 1977. The report presented here, including its recommendations, is the culmination of three years of research undertaken by Federal agencies to evaluate the possible impact of suggested changes on the quality and cost of the resulting data. It is the work of the Interagency Committee for the Review of the Racial and Ethnic Standards and its Research Working Group on Racial and Ethnic

Standards. OMB established the Interagency Committee in 1994 to evaluate various proposed changes and provide recommendations. The committee created the Research Working Group to develop and carry out a research agenda for evaluating the proposals.

The report consists of six chapters. This first chapter provides a brief history of Directive No. 15, a summary of the issues considered by the Interagency Committee, a review of the research activities over the past three years, and a discussion of the criteria used in conducting the evaluation. Chapter 2 discusses several general concerns that need to be addressed when considering any changes to the current standards. Chapters 3 through 5 report the research results as they bear on the more significant suggestions for changes to Directive No. 15. These suggestions include, but are not limited to, permitting respondents to report multiple racial backgrounds, a single question on race and ethnicity that would include Hispanic as a category, expanding the minimum set of categories to include other specific ethnic or racial groups. and adding to, or replacing the names of categories used to identify specific racial or ethnic groups. Chapter 6 presents the committee's recommendations on various suggested changes based on its evaluation of the research results and consideration of related public comments and testimony.

1.2 History of Directive No. 15

The United States Government has long collected statistics on race and ethnicity. Such data have been used to monitory changes in the social, demographic, health, and economic characteristics of various groups in our population. Federal data collections, through censuses, surveys, and administrative records, have provided an historical record of the Nation's population diversity and its changing social attitudes, health status, and policy concerns.

Since the 1960's, data on race and ethnicity have been used extensiity in monitoring and enforcing civil rights laws covering areas such as education, employment, housing and mortgage lending, health care, voting rights, and the administration of justice. Theses legislatively based priorities created the need among Federal agencies for compatible, nonduplicative data for population groups that historically had suffered discrimination on the basic of their race or ethnicity. In response, OMB issued, in 1977, the current set of categories for use in the collection and presentation of data on race and eithnity. The categories also implemented the requirements of Public Law 94–311 of June 16, 1976, which called for the collection, analysis, and publication of economic and social statistics on persons of Spanish origin or descent.

The current standard provides that, if racial and ethnic data are collected separately, the minimum racial categories are:

—*American Indian or Alaskan Native.* A person having origins in any of the original peoples of North America, and who maintains cultural identification through tribal affiliation or community recognition.

—*Asian or Pacific Islander.* A person having origins in any of the original peoples of the Far East, Southeast Asia, the Indian subcontinent, or the Pacific Islands. This area includes, for example, China, India, Japan, Korea, the Philippine Islands, and Samoa.

—*Black.* A person having origins in any of the black racial groups of Africa.

—*White.* A person having origins in any of the original peoples of Europe, North Africa, or the Middle East.

For ethnicity, the categories are:

—*Hispanic origin.* A person of Mexican, Puerto Rican, Cuban, Central or South American or other Spanish culture or origin, regardless of race.

—*Not of Hispanic origin.* A person not of any Spanish culture or origin.

When a combined format is used, the minimum categories are: (1) American Indian or Alaskan Native; (2) Asian or Pacific Islander; (3) Black, not of Hispanic origin; (4) Hispanic; and (5) White, not of Hispanic origin.

The current categories originated in the work of the Federal Interagency Committee on Education (FICE) whose membership represented some 30 Federal agencies. In June 1974, FICE created an Ad Hoc Committee on Racial and Ethic Definitions, whose 25 members came from Federal agencies with major responsibilities for the collection or use of data on race and ethnicity. This ad hoc committee was charged with developing terms and definitions for a broad range of data on race and ethnicity to be collected by Federal agencies on a compatible and nonduplicative basis. The committee sought to ensure that the categories could be aggregated, disaggregated, or otherwise combined so that the data developed by one agency could be used in conjunction with the data developed by another agency. The committee also suggested that the basic categories could be subdivided into more detailed ethnic subgroups to meet users' needs, but that to maintain comparability, data from one major category should never be combined with data from any other category.

In the spring of 1975, FICE completed its work on a draft set of categories. An agreement was reached among OMB, the General Accounting Office (GAO), the Department of Health, Education, and Welfare's (HEW) Office for Civil Rights, and the Equal Employment Opportunity Commission (EEOC) to adopt these categories for a trial period of at least one year. This trial was undertaken to test the new categories and definitions and to determine what problems, if any, would be encountered in their implementation.

At the end of the test period, OMB and GAO convened an Ad Hoc Committee on Racial/Ethnic Categories to review the experience of the agencies that had implemented the standard categories and definitions and to discuss any potential problems that might be encountered in extending the use of the categories to all Federal agencies. The Committee met in August 1976 and included representatives of OMB; GAO; the Departments of Justice, Labor, HEW, and Housing and Urban Development; the Bureau of the Census; and the EEOC. Based upon the discussion in that meeting, OMB prepared minor revisions to the FICE definitions and circulated the proposed final draft for agency comment. These revised categories and definitions became effective in September 1976 for all compliance record keeping and reporting required by the Federal agencies represented on the Ad Hoc Committee.

Based upon this interagency agreement, OMB drafted for agency comment a proposed revision of the ''race and color designations in Federal statistics'' contained in its circular on Standards and Guidelines for Federal Statistics. Some agencies published the draft revision for public comment. Following receipt of comments and incorporation of suggested modifications, OMB, on May 12, 1977, promulgated the racial and ethnic categories now set forth in Directive No. 15. Thus, for the first time, standard categories and definitions were to be used by all Federal agencies in both the collection and the presentation of data on race and ethnicity. The categories and definitions were developed primarily on the basis of geography; therefore, they were not to be interpreted as being scientific or anthropological in nature. The racial and ethnic categories in the Directive reflected, in particular, agency needs for data for use in monitoring and enforcing civil rights laws.

Although the standards given in Directive No. 15 have not been revised since 1977, OMB did publish in the January 20, 1988, **Federal Register** a draft Statistical Policy Circular soliciting public comment on a comprehensive revision of existing Statistical Policy Directives. Among the proposed changes was a revision of Directive No. 15 that would have added an ''Other'' racial category and required classification by self-identification. This proposal was supported by many multiracial and multiethnic groups and some educational institutions, but it drew strong opposition from large corporation and Federal agencies such as the Civil Rights Division of the Department of Justice, the Department of Health and Human Services, the EEOC, and the Office of Personnel Management (OPM). Critics asserted that the present system provided adequate data, that any changes would disrupt historical continuity, and that the proposed changes would be expensive and potentially divisive. Some members of minority communities interpreted the proposal as an attempt to provoke internal dissension within their communities and to reduce the official counts of their populations. Because it was evident from all of these comments that this proposal would not be widely accepted, no changes were made to Directive No. 15.

1.3 Concerns About the Current Standards

The population of the United States has become increasingly diverse during the 20 years that the current standards have been in effect. During the 1980s, immigration to the United States from Mexico, Central and South America, the Caribbean, and Asia reached historic proportions. The 1990 census data show that the population of the United States is more racially and ethnically diverse than ever. Furthermore, as a result of the growth in interracial marriages, there is an increase in the number of persons born who are of mixed race or ethnicity. In recent years, Directive No. 15 has been criticized for not sufficiently reflecting this growing diversity.

In addition, there have been a number of other concerns expressed. For example:

—The categories and their definitions have been criticized as failing to be comprehensive and scientific.

—Some have suggested that the geographic orientation of the definitions for the various racial and ethnic categories is not sufficiently definitive. They believe that there is no readily apparent organizing principle for making such distinctions and that definitions for the categories should be eliminated.

—Others maintain that the identification of an individual's racial and ethnic ''category'' often is a subjective determination, rather than one that is objective and factual. Thus, they believe that it may no longer be appropriate to consider the categories as a ''statistical standard.''

—There is disagreement over the use of self-identification versus observer identification.

—Some critics have said that the two formats permitted by Directive No. 15 are not compatible. They argue that, when using the two separate questions, race and Hispanic origin can be kept analytically distinct, but in the combined race/ethnicity format, they cannot, While many find the combined format particularly suitable for observer identification, the use of this format does not provide information on the race of those selecting it. As a result, the combined format makes it impossible to distribute persons of Hispanic origin by race and, therefore, may reduce the utility of counts in the four racial categories by excluding from them persons who would otherwise tend to be included.

—Certain critics have requested an open-ended question to solicit information on race and ethnicity that would combine the concepts of race, ethnicity, and ancestry.

—The importance of maintaining comparability over time also has been questioned, given that the categories have changed in the decennial censuses over the decades.

—Some have said that the collection categories should allow for capturing greater diversity, but that the categories used to present data should be aggregations of the more detailed categories.

—Others assert that the collection of data on race and ethnicity should be eliminated because it perpetuates racism and the fragmentation of society.

The following are some of the suggestions for changes to the current categories that OMB received during the current review process:

—Add a ''multiracial'' category to the list of racial designations so that respondents would not be forced to deny part of their heritage by having to choose a single category.

—Add an ''other'' category for individuals of multiracial heritage and for those who want the option of specifically stating a unique identification.

—Change the name of the ''Black'' category to ''African American.''

—Change the name of the ''American Indian or Alaskan Native'' category to ''Native American.''

—Since race and ethnicity are not distinct concepts, include Hispanic as a racial category, rather than as a separate ethnic category.

—Add a ''Middle Eastern'' or ''Arab'' ethnic category.

—Add a ''Cape Verdean'' ethnic category.

—Make ''Native Hawaiians'' a separate category or include ''Native Hawaiians'' in the American Indian or Alaskan Native category, rather than retain ''Native Hawaiians'' in the Asian or Pacific Islander category.

—Change the name of the ''Hispanic'' category to ''Latino.''

During 1993, Thomas C. Sawyer, then Chairman of the House of Representatives' Subcommittee on Census, Statistics, and Postal Personnel, held four hearings on the measurement of race and ethnicity in the decennial census. In testimony on July 29, 1993, OMB announced that it would undertake a comprehensive review of the categories, including an analysis of the possible effects of any proposed changes to the categories on the quality and utility of the resulting data that are used for a multiplicity of purposes.

As a first step, OMB asked the Committee on National Statistics (CNSTAT) of the National Academy of Sciences to convene a workshop to provide an informed discussion of the issues surrounding a review of the categories. The workshop, held on February 17–18, 1994, included representatives of Federal agencies, academia, social science research institutions, interest groups, private industry, and a local school district.

1.4 Principles for the Review Process

In March 1994, OMB established and held the first meeting of the Interagency Committee for the Review of the Racial and Ethnic Standards, whose members from more than 30 agencies represent the many and diverse Federal needs for data on race and ethnicity, including statutory requirements for such data. Given the range of suggestions and criticisms concerning Directive No. 15, OMB sought in constituting the committee to have all agency stakeholders participate in this comprehensive review of the standards. Agencies represented on the Interagency Committee included:

Department of Agriculture

National Agricultural Statistics Service
Economic Research Service

Department of Commerce

Bureau of the Census

Department of Defense

Defense Manpower Data Center
Office of the Secretary

Department of Education

National Center for Education Statistics
Office for Civil Rights

Department of Health and Human Services

Administration for Native Americans
Agency for Health Care Policy and Research
Centers for Disease Control and Prevention
Indian Health Service
National Center for Health Statistics
National Institutes of Health
Office for Civil Rights
Office of Minority Health
Office of Refugee Resettlement

Department of Housing and Urban Development

Department of the Interior

Bureau of Indian Affairs

Department of Justice

Bureau of Justice Statistics
Civil Rights Division
Immigration and Naturalization Service

Department of Labor

Bureau of Labor Statistics
Office of Federal Contract Compliance Programs

Department of Transportation

Bureau of Transportation Statistics

Department of Veterans Affairs

Equal Opportunity Employment Commission

Federal Reserve Board

National Science Foundation

Office of Personnel Management

Small Business Administration

U.S. Commission on Civil Rights

Office of Management and Budget, ex officio

The Interagency Committee developed a set of general principles to govern the review process. This process was designed not only to evaluate suggestions received from the public but also to balance statistical issues, data needs, social concerns, and the personal dimensions of racial and ethnic identification. These principles were as follows:

1. The racial and ethnic categories set forth in the standards should not be interpreted as being primarily biological or genetic in reference. Race and ethnicity may be thought of in terms of social and cultural characteristics as well as ancestry.

2. Respect for individual dignity should guide the processes and methods for collecting data on race and ethnicity; ideally, respondent self-identification should be facilitated to the greatest extent possible, recognizing that in some data collection systems observer identification is more practical.

3. To the extent practicable, the concepts and terminology should reflect clear and generally understood definitions that can achieve broad public acceptance. To assure they are reliable, meaningful, and understood by respondents and observers, the racial and ethnic categories set forth in the standard should be developed using appropriate scientific methodologies, including the social sciences.

4. The racial and ethnic categories should be comprehensive in coverage and produce compatible, nonduplicative, exchangeable data across Federal agencies.

5. Foremost consideration should be given to data aggregations by race and ethnicity that are useful for statistical analysis and program administration and assessment, bearing in mind that the standards are not intended to be used to establish eligibility for participation in any federal program.

6. The standards should be developed to meet, at a minimum, Federal legislative and programmatic requirements. Consideration should also be given to needs at the State and local government levels, including American Indian tribal and Alaska Native village governments, as well as to general societal needs for these data.

7. The categories should set forth a minimum standard; additional categories should be permitted provided they can be aggregated to the standard categories. The number of standard categories should be kept to a manageable size, determined by statistical concerns and data needs.

8. A revised set of categories should be operationally feasible in terms of burden placed upon respondents; public and private costs to implement the revisions should be a factor in the decision.

9. Any changes in the categories should be based on sound methodological research and should include evaluations of the impact of any changes not only on the usefulness of the resulting data but also on the comparability of any new categories with the existing ones.

10. Any revision to the categories should provide for a crosswalk at the time of adoption between the old and the new categories so that historical data series can be statistically adjusted and comparisons can be made.

11. Because of the many and varied needs and strong interdependence of Federal agencies for racial and ethnic data, any changes to the existing categories should be the product of an interagency collaborative effort.

12. Time will be allowed to phase in any new categories. Agencies will not be required to update historical records.

13. The new directive should be applicable throughout the U.S. Federal statistical system. The standard or standards must be usable for the decennial census, current surveys, and administrative records, including those using observer identification.

The committee recognized that these principles may in some cases represent competing goals for the standards. By applying these principles to the review process, the committee hoped to produce a standard that would result in consistent, publicly accepted data on race and ethnicity that would meet the needs of the Federal Government and the public while, at the same time, recognizing the diversity of the population and respecting the individual's dignity.

OMB invited comment on the principles when they were published in a June 9, 1994, **Federal Register** notice. That notice also contained background information on the development of Directive No. 15; the revision proposed but not made in 1988; the 1993 congressional hearings; and the CNSTAT workshop. OMB requested public comment on the adequacy of the current categories, as well as on the suggested changes it had received over the years. As part of the public comment period, OMB also held hearings in Boston, Denver, San Francisco, and Honolulu during July 1994. OMB received nearly 800 letters in response to the 1994 **Federal Register** notice and heard testimony of 94 witnesses during the four public hearings. A wide array of interested parties provided comments, including individuals, data users, and data providers from within and outside the Federal Government.

1.5 Overview of Research Activities

The Interagency Committee created a Research Working Group to outline an agenda for researching and testing key concerns. The Research Working Group, in August 1995, issued the ''Research Agenda for the Review of the Racial and Ethnic Categories in Directive No. 15,'' based on an examination of the information in the June 1994 **Federal Register** notice, the public comments it

engendered, and previous research. This agenda identified five central research issues together with a number of questions associated with these issues. Some of the questions cut across several of the central issues, and others were unique to a particular issue. In developing the research agenda, the Research Working Group gave equal weight to the conceptual and the operational questions that must be answered before any changes to Directive No. 15 can be considered. The five central issues were:

(1) *Reporting of multiple races.* What are the possible effects of including a multiple race response option or a multiracial category in data collections that ask individuals to identify their race and ethnicity?

(2) *Combining questions on race and Hispanic origin.* Should a combined race/Hispanic origin question be used instead of separate questions on race and Hispanic origin?

(3) *Concepts of race, ethnicity, and ancestry.* Should the concepts of race, ethnicity, and ancestry be combined and include, for example, a follow-up, open-ended question with no fixed categories? How well does the public understand these three concepts?

(4) *Terminology.* Should any of the current terminology for the racial and ethnic categories be replaced or modified?

(5) *New classifications.* Should new racial or ethnic categories be developed for specific population groups and be added to the minimum basic set of categories?

The most important conceptual questions surrounding these issues were (1) Who are the stakeholders, (2) how are various terms used and understood, (3) what is the respondent's view of the task of self-identification, (4) what would be the effects of any changes on population counts and historical trends, and (5) what would be the effects of any changes on the quality and usefulness of the resulting data? The most important operational questions were (1) How would the changes affect data collection procedures, (2) what differences might there be between collection and reporting categories, (3) how could continuity be maintained, (4) how should any changes be implemented, and (5) how might cognitive research assist in implementing any changes? In addition to recommending research that should be done, the Research Working Group both encouraged and supported a number of more specific research projects carried out by the individual agencies.

The first national test related to the central issues was the May 1995 Supplement on Race and Ethnicity to the Current Population Survey (CPS), which had a sample of approximately 60,000 households and more than 100,000 persons. The supplement, sponsored by the Bureau of Labor Statistics and conducted by the Bureau of the Census, tested the effects of: (1) Adding a multiracial category to the list of races, and (2) including ''Hispanic'' as a category on the race question. Respondents also were asked about their preferences for terms to describe themselves (e.g., African-American or Black and Latino or Hispanic). Originally, questions concerning the respondent's understanding of the concepts of race, ethnicity, and ancestry were to be included, but extensive cognitive testing prior to creating the survey instrument indicated that these types of questions were confusing and difficult to administer in a large-scale survey. Additional analysis of open-ended responses by cognitive researchers provided possible explanations for the inconsistencies in some respondents' answers to the race and ethnicity questions.

As a part of the research on the subject content for the 2000 census, the Bureau of the Census tested alternative versions of questions on race and Hispanic origin in the March 1996 National Content Survey (NCS). This test was designed to provide information on how members of approximately 90,000 households identify their race and ethnicity in a self-reporting context, in contrast to the CPS Supplement which was administered by interviewers either in person or by telephone. Some NCS panels, comprising about 18,000 households, tested the effects of adding a multiracial category to the race question, placing the Hispanic origin question immediately before the race question, and combining both of these changes. The NCS sample was not designed to detect possible effects of different treatments on relatively small population groups, such as American Indians and Alaskan Natives, detailed Asian and Pacific Islander groups (such as Chinese and Hawaiians), or detailed Hispanic origin groups (such as Puerto Ricans and Cubans). Moreover, because the results were based on the responses from households in the national sample that mailed back questionnaires, the results do not represent the entire national population.

In contrast to the NCS, the Race and Ethnic Targeted Test (RAETT) was designed by the Bureau of the Census to provide findings for smaller population groups. Conducted in June 1996, the RAETT sample included approximately 112,000 urban and rural households. The sample was taken from geographic areas of the country with concentrations of different racial and ethnic populations including American Indians, Alaskan Natives, Asians, Pacific Islanders, Hispanics, Blacks, and White ethnic groups. This design permits assessments of the effects of changes on relatively small populations not reliably measured in national samples. The RAETT tested and evaluated the effects of adding a ''multiracial or biracial'' category; having instructions in the race question to ''mark one or more'' or to ''mark all that apply; placing the Hispanic origin item before the race item; combining race, Hispanic origin, and ancestry in a single, two-part question; using a combined ''Indian (Amer.) or Alaska Native'' category; and using a ''Native Hawaiian'' or ''Hawaiian'' category.

In the spring of 1995, the National Center for Education Statistics and the Office for Civil Rights in the Department of Education conducted a survey of a thousand public schools. This survey obtained information on how schools currently collect data on students' race and ethnicity, how administrative records containing data on race and ethnicity are maintained and reported, what state laws mandate or require of school systems with respect to collecting data on race and ethnicity, and current issues in schools regarding categories for reporting data on race and ethnicity.

The Centers for Disease Control and Prevention held a Workshop on the Use of Race and Ethnicity in Public Health Surveillance. The workshop had three objectives: (1) To describe the current measures of race and ethnicity and their use in public health surveillance, (2) to assess the use of data on race and ethnicity in surveillance for planning, operation, and evaluation of public health programs, and (3) to propose better use of existing measures for race and ethnicity or to identify alternative measures. The limitations inherent in the current concepts, measures, and uses of race and ethnicity in public health surveillance were identified, and recommendations were made regarding their improvement.

The National Center for Health Statistics and the Office of Public Health and Science sponsored interviews with 763 multiracial and Hispanic women who had a baby during the preceding three years. The purpose of the study was to determine the effects of different question formats on reporting of race on birth certificates. The standard open-ended race question was compared with two experimental versions: (1) An open-

ended race question that included the term ''multiracial'' as one of several examples, and (2) a ''mark all that apply'' format. When possible, results were compared with the race the respondent recorded on the youngest child's birth certificate.

A literature search on work related to racial classification in the health field (using Medline) was conducted by the Department of Health and Human Services (HHS). An inventory of HHS minority health data bases that provides information on the data available and on the data collection problems that have been encountered was developed.

A focus group was conducted with state and local government members of the Association of Public Data Users. The participants were asked about possible effects of various suggested changes on their organizations. An expert on redistricting and reapportionment was interviewed concerning the effects these same changes might have on reapportionment and redistricting following the 2000 census. A survey of a small number of businesses and professional associations that rely on Federal statistics also was undertaken to ascertain views about the time and costs involved if various changes were made.

1.6 Evaluation of Research Results

Although some of the issues surrounding the proposed revisions may ultimately be settled through policy discussion and the criteria used may at times be subjective, there is an important place in the discussion for empirically grounded research. Thus, this evaluation, while considering such subjective information as stakeholder positions and respondent burden, focuses on the following objective criteria:

(1) Ease of adhering to the principle of self-identification;

(2) Consistency and quality of measurement across time with respect to various subgroups;

(3) Magnitude of changes to current time series;

(4) Ability to provide categories that are meaningful for policy purposes;

(5) Ability to develop implementable reporting standards for all data providers;

(6) Ease of using the measures in different data collection settings;

(7) Ease of creating data editing and adjustment procedures; and

(8) Costs associated with changing or not changing the standards.

To facilitate the use of research results to evaluate alternatives and develop recommendations, the Research Working Group has acted as a clearinghouse for data gathering activities. As such, the Research Working Group has monitored various projects and overseen the consolidation of results in a form intended to be useful for policy makers.

Chapter 2. Issues of General Concern

2.1 Overview

This provides a discussion of several general concerns that the Research Working Group considered during its review of Directive No. 15. They are: (1) Statutory and programmatic needs of the Federal agencies for data on race and ethnicity, (2) voting rights issues, (3) data continuity concerns, and (4) financial costs of making changes to the Directive. These concerns merit general consideration because they must be confronted to some degree when dealing with any of the proposed changes. The relationship of specific suggested changes to these concerns will be addressed in later chapters.

2.2 Satisfying Statutory and Program Needs

Federal agencies that collect data on race and ethnicity include, but are not limited to, the Bureau of the Census, the Bureau of Labor Statistics, the Centers for Disease Control and Prevention, the National Center for Health Statistics, and the National Center for Education Statistics. Agencies use data on race and ethnicity for administrating Federal programs for enforcing the civil rights laws, and for analyses of social, economic, and health trends for population groups.

A principal driving force in the 1970s for the development of the current standards was the need for data on race and ethnicity to enforce the civil rights laws. Some of the agencies that use these data for monitoring and enforcing civil rights laws include the Equal Employment Opportunity Commission (EEOC), the U.S. Commission on Civil Rights, the Civil Rights Division of the Department of Justice, the Office of Federal Contract Compliance Programs in the Department of Labor, the Office for Civil Rights in the Department of Education, and the Office for Civil Rights in the Department of Health and Human Services. State and local governments, educational institutions, and private sector employers use the categories when providing data on race and ethnicity to meet Federal reporting requirements.

Reliable and consistent information is important for enforcing Federal laws, In recent U.S. Supreme Court decisions involving education, employment, and voting rights, the Court has interpreted the Fourteenth Amendment to the United States Constitution to require that governmental decision-making based on racial classifications be subjected to ''strict scrutiny'' to determine whether it is ''narrowly tailored'' to meet ''compelling State interests.'' Changes in Directive No. 15 could affect the ability of agencies to carry out the court's mandate. If, for instance, allowing individuals to identify with more than one race would make it more difficult to identify the members and characteristics of a particular racial or ethnic group (such as American Indians and Alaska Natives, or Asians and Pacific Islanders), then determining whether a ''compelling State interest'' exists with regard to such persons—and whether the government's action is narrowly enough tailored to meet that interest—could become correspondingly more difficult.

Generally, the statutes that require collection of data on race and/or ethnicity do not specify the exact categories that Federal agencies must use. Most of these laws simply require that data on race and ethnicity be collected. The following examples illustrate statutory requirements that specify the exact categories particular agencies must use:

- The Federal Affirmative Employment Program of the U.S. Equal Employment Opportunity Commission is required by 29 CFR 1607.4B. to use the minimum OMB Directive No. 15 categories except in Hawaii (where detailed Asian or Pacific Islander subgroups are to be collected) and Puerto Rico (Hispanic and non-Hispanic)
- Federal agencies are required by the Office of Personnel Management's Federal Personnel Manual 292–I (Book III, pp. 106–107, 296–233 and 298–302) to collect the minimum racial and ethnic categories and eleven national origin categories (Asian Indian, Chinese, Filipino, Guamanian, Hawaiian, Japanese, Korean, Samoan, Vietnamese, all other Asian or Pacific Islanders, and not Hispanic in Puerto Rico) for the Central Personnel Data Files.
- Legislation covering collection of data on race by the Bureau of Indian Affairs has varying definitions of Indian depending on the program (Indian Reorganization Act of 1934, 25 U.S.C. 479 and 25 CFR part 5).
- Contract Compliance Programs of the Employment Standards Administration are required by 41 CFR chapter 60 (EEO) to collect data on race and ethnicity for workforce analysis using the categories ''Blacks, Spanish-surnamed Americans, American

Indians, and Orientals'' (41 CFR 60–2.11).

• Data on race and ethnicity from employee selection tests and procedures are to be collected using the categories ''Blacks (Negroes), American Indians (including Alaskan Natives), Asians (including Pacific Islanders), Hispanic (including persons of Mexican, Puerto Rican, Cuban, Central or South American, or other Spanish origin or culture regardless of race), Whites (Caucasians) other than Hispanic, and totals'' (41 CFR 60–3.4B.).

• The Center for Minority Veterans of the Department of Veterans Affairs is required by Sec. 509, Public Law 103–446 and 38 U.S.C. 317 to use the categories Asian American, Black, Hispanic, Native American (including American Indian, Alaskan Native, and Native Hawaiian), and Pacific-Islander American.

2.3 Voting Rights Issues

Concerns have been raised that changes to the current categories for data on race and ethnicity may affect the usefulness of the data for congressional reapportionment, legislative redistricting, and enforcement of the Voting Rights Act.

Following each decennial census, congressional reapportionment—the redistribution of the 435 seats in the U.S. House of Representatives among the 50 States—is calculated using the population totals for each state and the formula of ''equal proportions'' adopted by the Congress in 1941 (United States Code, Title 2, Section 2a). Redistricting is the process of redrawing the boundaries of congressional, state, and local legislative districts in accordance with the Fourteenth Amendment's ''one-person/one-vote'' principle and the standard of population equality as set forth in *Wesberry* v. *Sanders, Reynolds* v. *Sims,* and subsequent court decisions. Changes to Directive No. 15 would be expected to affect congressional reapportionment and one-person/one-vote compliance in redistricting only to the extent that such changes affect the overall response to the decennial census.

Charges of minority vote dilution—the claim that the redistricting plan or at-large election system minimizes or cancels out the voting strength of a minority group—under Section 2 of the Voting Rights Act (which applies nationwide) are usually determined by reference to decennial census data on race and ethnicity. In addition, compliance with Section 5 of the Voting Rights Act—which requires Federal preclearance for new voting practices and procedures in certain states—also is generally determined by reference to decennial census data on race and ethnicity. Changes to Directive No. 15 could have implications for the effective implementation of the Voting Rights Act.

Decennial census data are used to determine the count and distribution of the voter-eligible minority population. Proof that it is possible to draw a district with a voter-eligible minority population in the majority is usually needed to establish a vote dilution claim under Section 2 of the Voting Rights Act. Changes to the current categories that alter the counts of voter-eligible minorities could affect the ability of such groups to mount successful vote dilution claims. The Attorney General's preclearance determinations pursuant to Section 5 of the Voting Rights Act—whether to grant or deny Section 5 preclearance—are often affected by the size and distribution of the minority population.

In addition, data on race and ethnicity from the decennial census frequently are used as independent variables in statistical procedures that estimate group voting behavior, particularly when counts of registered voters by race or ethnicity are not available. These estimates of group voting behavior are essential to vote dilution claims under Section 2 of the Voting Rights Act, as well as to the analysis of many types of voting changes under Section 5 of the Voting Rights Act.

2.4 Data Continuity Concerns

If changes are made to the Federal standards for collecting data on race and ethnicity, it will be critically important to data users to understand the impact of those changes vis-a-vis the categories they have been using for the past 20 years. The acceptance of new ways of reporting race and ethnicity may require supporting information so that users can assess the magnitude of changes to current time series. To that end, alternative methods of tabulating multiple responses on race into the current minimum set of categories must be investigated further.

2.5 Financial Costs

If OMB were to revise the categories for data on race and ethnicity by modifying Directive No. 15, a sizeable number of Federal agencies and others would have to change data collection forms, computer programs, interviewers' and coders' manuals, and other related materials for their data systems. Although Directive No. 15 is a standard for use by Federal agencies, many State and local agencies and private sector entities also follow the Federal standards for collection, record keeping, and presentation data on race and ethnicity. On the other hand, there will be other costs incurred if changes are not made to the current categories, and these costs are also discussed in this section.

If a decision were made either to use separate questions exclusively, or to use a combined format always, or to use a ''mark one or more'' reporting option for race, or to add a ''multiracial'' category, there would also be costs for redesigning data editing, coding, and processing systems to accommodate the changes.

Other costs would be associated with changing data base management, retrieval and aggregation programs, and historical table formats. Data base management systems might have to be significantly expanded to provide data comparability with historical series. Procedures might have to be developed for editing multiple responses to achieve this comparability. Staff would have to be trained in the new procedures resulting from any change to the current categories. Since the estimated transition time for changing EEOC data bases would be 2–3 years, data for these years could be severely hampered for enforcement purposes. This would likely result in additional costs for protracted processing of grievances.

The Health Resources and Services Administration (HRSA) of the Department of Health and Human Services has noted that substantial changes for 23 categorical grant programs would be required for competing and noncompeting grant application materials, data entry and report programs, and the preference/priority databases. Alterations in the current collection categories for data on race and ethnicity would require restructuring of the definitions and data collection tools designed to report cross-cutting outcome measures for Title VII and VIII Health Professions and Nursing education and training programs.

During informal discussions, company representatives offered a few examples of the potential impact on private sector employers if changes to the categories were to be made. The costs of making changes to forms is considered to be minimal. Changes in the data systems would be more expensive than changes in the forms, since this effort would be very labor intensive. In addition, if there were new categories, employees might have to be resurveyed in order to update the information on race and ethnicity.

Any changes from the current collection mechanism would entail

major program changes for the 700 institutions participating in the seven student assistance campus-based loan and scholarship programs. Review and revision of records for eligibility and fiscal accounting data would be required, including manual review of data, computer programming changes, and changes to the scope of work for contract services. In addition, the Student Financial Aid Guideline and the User Manual for the Electronic Reporting System would require review and revision. Moreover, changes in definitions would require that schools reconcile past and current submissions of data for compatibility to enable HRSA to make appropriate awards to participating institutions.

The Administration on Children and Families (ACF) of the Department of Health and Human Services considers the overall effect of change to the racial and ethnic categories to be marginal. ACF collects data on race and ethnicity for several internal data systems (e.g., foster care, personnel, grant-related information). However, in relation to the total cost of maintenance of these internal data systems, possible changes in the classification of data on race and ethnicity are likely to have only marginal effects. Alterations to racial and ethnic categories used for data systems maintained by private contractors for ACF (e.g., Head Start, Child Abuse and Neglect, Developmentally Disabled, Native American) would not likely cause excessive burden to the data collection effort.

In addition, ACF has data systems that are legislatively mandated and involve data collections by states (such as temporary assistance to needy families, child support enforcement). If the alterations to existing systems are profound, states might be resistant to change or they might seek Federal funds to defray costs of updating state data systems, particularly to meet Federal reporting requirements.

While financial costs would be incurred if changes are made to Directive No. 15, there are other types of costs associated with not making changes. Problems that exist with use of the current Directive will not be resolved. These continuing problems include lack of standardization for classifying data on race and ethnicity across state and Federal agencies; less than optimal participation in Federal surveys (especially item nonresponse); misidentification of individuals and groups in surveys; inaccurate counts and rates; inaccurate research; inaccurate program design, targeting and monitoring; and possibly misallocation of funds. There will continue to be inconsistency even within the same Federal agency if Hispanic origin data continues to be collected using either the combined format or two separate questions. It is not uncommon for the denominator of a rate for Hispanics to be based on data collected using separate questions on race and ethnicity while the numerator is based on data collected using the combined format.

Chapter 3. Reporting More Than One Race

3.1 Background

This chapter addresses issues related to whether or not the Federal standards for data on race and ethnicity should provide an option that permits the reporting of more than one race. The chapter discusses different approaches that have been studied by Federal agencies to provide such an option. It presents findings of the research conducted by Federal agencies on the alternative approaches and identifies potential implications of providing or not providing a response option for reporting more than one race. Following a review of the current standards and an overview of the research conducted, the chapter addresses the following questions:

- Should a multiracial category be listed among the response options to the question on race? (section 3.4.2)
- If a multiracial category is listed, should a ''follow-up'' format be used, in which individuals who select ''multiracial'' are asked in a follow-up question to specify their racial identities? (section 3.4.3)
- Should a multiple-response format be used in which the respondent is instructed to ''mark one or more races''? (section 3.4.4)
- Should a multiple-response format be used in which the respondent is instructed to ''mark all that apply'' on the race question? (section 3.4.5)
- Are there other options for reporting of more than one race by respondents? (section 3.4.6)

Sections 3.5 through 3.7 discuss some of the trends, concerns, and potential implications related to adding (or not adding) an option for reporting more than one race to the Federal standard for collecting and reporting racial categories, including the effects on such areas as legal and program needs, measurement issues, and data production.

3.2 Current Practice

Directive No. 15 provides a minimum set of racial and ethnic categories—four categories for data on race (White, Black, American Indian or Alaskan Native, and Asian or Pacific Islander) and two categories for data on ethnicity (Hispanic origin and not of Hispanic origin). The current standard permits Federal agencies to use more detailed categories for collecting data on population groups, so long as the data collection is organized in a way that makes it possible for the agencies to aggregate the more detailed designations into the Directive No. 15 categories.

For person who identify with more than one race, Directive No. 15 indicates that the single racial category which most closely reflects the individual's recognition in his or her community should be used. Directive No. 15 does not provide for identifying two or more races.

3.3 Overview of Research on Reporting More Than One Race

To assist OMB in deciding whether or not the Federal standard should provide for reporting more than one race, Federal agencies have conducted several major surveys to test the possible effects on data quality of various options. Major objectives of the research and testing programs carried out in 1995 and 1996 have included:

- Analysis of the growth, characteristics, and self-identification patterns of persons in interracial marriages and households;
- Cognitive research to develop alternative race questions with a category called ''multiracial'' or response options such as ''mark one or more'' or ''mark all that apply;''
- Empirical research on how reporting more than one race is likely to affect current racial distributions in self-administered censuses and surveys (compared, for example, with interviewer and telephone surveys); and
- Research on whether most respondents who self-identified as multiracial with specify more than one race.

3.3.1 Surveys to Explore Options

The Current Population Survey, conducted jointly by the Bureau of Labor Statistics (BLS) and the Bureau of the Census, included a Supplement on Race and Ethnicity in May 1995 (the CPS Supplement). The CPS Supplement was designed to test the effect of asking questions about race and Hispanic ethnicity, with and without a multiracial response option. As part of its research and testing program for Census 2000, the Bureau of the Census conducted two additional studies—the National Content Survey (also known as the 1996 census survey or the Census

2000 survey) and the Race and Ethnic Targeted Test (the RAETT)—to explore the implications of using different formats for questions on respondents' racial identification and reporting of Hispanic origin.

3.3.2 Cognitive Research to Guide Survey Design

The agencies conducted extensive cognitive research to pretest the racial and ethnic categories and the sequencing of the questions on race and Hispanic origin in the survey instruments. An interagency team conducted cognitive research on several versions of the CPS Supplement questionnaire designed for face-to-face and telephone interviews. The race question included a multiracial category, with a follow-up question for reporting the races with which the respondent identified. The questionnaire was tested with a range of racial and ethnic groups in various regions of the United States, and respondents from all groups were able to report that the term ''multiracial'' meant more than one race. (McKay and de la Puente, 1995)

The Bureau of the Census conducted cognitive research on two different options for reporting more than one race on the race item in a mail survey form. The options consisted of including (1) a ''multiracial'' category in the race question, and (2) an instruction to mark one or more of the racial categories provided in the race question.

The cognitive research guided the placement of a separate multiracial category in the race item, determined the appropriate number of write-in lines to the multiracial-response box, identified the appropriate terminology for soliciting response from persons of mixed racial parentage (without providing a definition of ''multiracial'' for this population), and guided the development of the instructions allowing respondents to choose more than one box. Because the cognitive research revealed that some respondents believed the term ''multiracial'' meant more than two races, the wording ''multiracial or biracial'' was used in the NCS and the RAETT to convey to respondents that the category is to be used by those who identify with two or more racial groups. (Gerber and de la Puente, 1996)

The cognitive research also was used to develop a ''mark one more'' instruction, indicating that respondents could mark more than one racial category as applicable. The initial cognitive work, which offered respondents the choice of marking one racial category or marking more than one racial category, asked those selecting more than one group to specify the race with which they most identified.

Cognitive interviews tested several versions of this question. A number of problems were identified in these interviews. First, some respondents could not absorb or understand the complex instructions that were necessary. Second, the formatting (which was subject to space limitations) made it difficult for some respondents to read and absorb the question fully. Third, respondents who expected a ''multiracial'' category were disappointed that this response option was not provided. And finally, some respondents were not comfortable with being asked to designate a single race, when they did not want to discount any part of their racial heritage. The question that was ultimately used asked respondents merely to mark the boxes, without also asking them to designate the race with which they most identified. (Gerber and de la Puente, 1996)

Respondents for the cognitive research were recruited on the basis of interracial parentage or ancestry. In testing the use of multiracial reporting options in both the interview and self-administered mail modes, researchers found that many of the respondents recruited based on known multiracial status did not choose to report as multiracial. Reasons they gave for not selecting the multiracial category included: identification with the racial and cultural group of one parent; acceptance of the racial identity perceived to be conferred by their community; and a lack of identification with a ''multiracial'' group encompassing members of different racial ancestries. (McKay and de la Puente, 1995; Gerger and de la Puente, 1996)

3.4 Evaluating Research on Options for Reporting More Than One Race

The sections that follow present results from the CPS Supplement, the National Content Survey, and the RAETT as they bear on the alternative approaches outlined at the beginning of this chapter (See section 3.1). Brief descriptions of these surveys follow.

The Current Population Survey is a monthly national sample survey of approximately 60,000 households; it routinely collects information on the race and ethnic origin of household members using the current Directive No. 15 categories. The May 1995 CPS Supplement collected additional racial and ethnic data on the households under four different panel conditions:

Panel 1 Separate race and Hispanic-origin questions, with no ''multiracial'' category.

Panel 2 Separate race and Hispanic-origin questions, with ''multiracial'' category.

Panel 3 Combined race and Hispanic-origin question, with no ''multiracial'' category.

Panel 4 Combined race and Hispanic-origin question, with ''multiracial'' category.

The CPS Supplement had a response rate of 82.9 percent.

The National Content Survey (NCS), conducted from March through June 1996, was a mail survey of 94,500 households drawn from 1990 decennial census ''mail back areas'' representing about 95 percent of the country. The NCS included thirteen panels, four of which were designed to evaluate the effects of adding a ''multiracial or biracial'' category and reversing the sequence of the questions on race and Hispanic origin. It is less representative of American Indians and Alaska Natives, given that about 25 percent of those populations live outside ''mail back areas.''

The NCS panels were as follows:

Panel 1 Separate race and Hispanic-origin questions—no ''multiracial or biracial'' category; race first sequence.

Panel 2 Separate race and Hispanic-origin questions—with ''multiracial or biracial'' category; race first sequence.

Panel 3 Separate race and Hispanic-origin questions—no ''multiracial or biracial'' category; Hispanic-origin first sequence.

Panel 4 Separate race and Hispanic-origin questions—with ''multiracial or biracial'' category; Hispanic-origin first sequence.

Each of the four questionnaires was mailed to a panel of about 6,000 households. The response rate for the four panels was 72 percent; the results are thus based on approximately 18,000 households. Computer-assisted telephone reinterviews were conducted with each household that had completed and returned the NCS form. Because the NCS sample excluded households outside 1990 census mailback areas, and some households did not return a questionnaire, results from the NCS cannot be generalized to the entire national population.

The RAETT, conducted by the Bureau of the Census in the summer of 1996, was the principal vehicle for testing and evaluating several important proposed changes for the race question. The RAETT targeted 112,000 households in

areas that have, relative to the Nation as a whole, high concentrations of households in any of six specified racial or ethnic groups: White ethnic (whether European, Canadian, or American), Black, American Indian, Alaska Native, Asian or Pacific Islander, and Hispanic origin. A total of 58,911 questionnaires were returned, yielding an overall response rate 53 percent.

The RAETT included questions designed to test the effects of a ''multiracial or biracial'' category as well as ''mark one or more'' and ''mark all that apply'' approaches to reporting more than one race, and a combined question on race and Hispanic origin, using eight different panels or versions of the questionnaire. The RAETT panels were as follow:

Panel A Separate race and Hispanic origin questions—no ''multiracial or biracial'' category; Hispanic origin first sequence.

Panel B Separate race and Hispanic origin questions with ''multiracial or biracial'' category with write-ins; Hispanic origin first sequence.

Panel C Separate race and Hispanic origin questions with ''mark one or more races'' instruction; Hispanic origin first sequence.

Panel D Separate race and Hispanic origin questions with a ''multiracial or biracial'' category with write-ins; race first sequence.

Panel E Combined race, Hispanic origin, and ancestry question with a ''multiracial or biracial'' category.

Panel F Combined race, Hispanic origin, and ancestry with ''mark one or more boxes'' instruction.

Panel G Separate race and Hispanic origin questions with ''multiracial or biracial'' category with write-ins; Hispanic origin first sequence; tested terminology and alphabetization of categories.

Panel H Separate race and Hispanic origin questions with ''mark all that apply'' instruction; Hispanic origin first sequence.

Each of these surveys provides important information about options for collecting and classifying data on race and ethnicity, but each also has its limitations. The CPS Supplement is nationally representative and data were gathered for over 80 percent of the sample, but it could not provide reliable information for smaller groups in the population. The NCS is close to being nationally representative and its use of a mail out/mail back questionnaire is particularly relevant for designing the 2000 census, but the response rate was only 72 percent, and it too could not provide reliable information for smaller groups.

The RAETT design provides a good test of the possible effects of suggested new racial categories because it focuses on populations for which the national surveys often do not provide sufficiently large samples. However, even with a 100 percent response to the RAETT, results could be generalized only to the population in the census tracts in each targeted sample frame. The actual response rate averaged 53 percent, and the response rates in some targeted samples were as low as 34 percent. The sample design of RAETT also does not permit results for different targeted samples to be combined.

3.4.1 Data Comparability

A key concern of some Federal agencies, reflected in the principles that have guided the review of the current standards, has been the comparability of data from any new categories with information produced under the existing categories. In its report on the RAETT, the Bureau of the Census presented—for purposes of illustration—different approaches for tabulating the data, using the information provided in the write-in entries to the ''multiracial or biracial'' category and in multiple responses to the race question. Some of these classification approaches provide examples of procedures that could be developed and used by the agencies as ''bridges'' between the current and any new classification. The three illustrative approaches were termed the single-race approach, the all inclusive approach, and the historical series approach. They may be characterized as follows:

Single-race approach. Responses indicating only one racial category would be assigned to that category. Responses from individuals who reported multiple races would be classified into a separate ''multiple race'' category. This method provides a lower bound for the number who identify with a given category. The results from this approach are readily available from standard tabulations.

All-inclusive approach. Responses are classified into racial category specified using the minimum set of categories in Directive No. 15. With a single race/ethnicity question using the combined format in Directive No. 15, the all-inclusive Hispanic proportion would be most comparable to the proportion reporting Hispanic when there are separate questions, one for race and one for ethnicity.

The sum of the percentages reported for the four separate racial categories would exceed 100 percent, because multiple race responses would be counted in each reported racial category. In spite of this disadvantage, the all-inclusive approach would provide information on the total number of times the racial category had been selected.

Historical series approach. Unlike the single race or the all-inclusive approach, the historical series approach can take on many variations, just one of which was used in the RAETT illustrative tabulations. The intent of this approach is to classify data into categories that resemble those that have been used historically to enforce current civil rights laws. An individual's response (or responses) is classified into one and only one category, in a set of mutually exclusive and exhaustive categories that add up to 100 percent. For example, in the report on the RAETT, which tested a ''multiracial or biracial'' category with a write-in to specify races as well as other options for reporting more than one race, the historical series approach classified into the Asian or Pacific Islander category responses of: (1) Only the Asian or Pacific Islander category, (2) the Asian or Pacific Islander category and also White, (3) the Asian or Pacific Islander category and Other Race, and (4) the Asian or Pacific Islander category and the multiracial category, with no specification of additional races. The ''multiracial'' or ''other'' category in the historical series were a residual category which consisted of responses to the ''multiracial'' category that did not specify any races; and responses of two race categories other than ''White'' or ''Some Other Race.'' A more complete description of the historical series approach is provided in the RAETT report.

Under the historical series approach, the percentages allocated to each of the major categories were comparable to the data collected without a multiple race reporting option (Panel A of the RAETT), except for the Alaska Native targeted sample. The discrepancy in this group may be due to the fact that this particular targeted sample suffered from both a small size and from an extremely low response rate (34 percent).

3.4.2 Should a Multiracial Category Be Listed Among the Response Options to the Question on Race?

The CPS Supplement on Race and Ethnicity, the National Content Survey, and the Race and Ethnic Targeted Test all allowed testing of the effects of adding a multiracial category to the list of races. The CPS Supplement used the term ''multiracial'' to identify the category, and the NCS and the RAETT used the term ''multiracial or biracial.''

CPS Supplement. In the CPS Supplement, the race question on

Panels 2 and 4 included a ''multiracial'' category; results were very similar—a little more than 1.5 percent identified as multiracial in each panel.

Table 3.1 shows that the multiracial response option drew respondents primarily from the American Indian, Eskimo, and Aleut population, and from those who reported in the ''Something Else'' category. Without a multiracial response category, about 1 percent reported as American Indian, Eskimo, and Aleut. With a multiracial category, about 0.75 percent reported in the American Indian, Eskimo, and Aleut category only.

The proportions reporting in the White category, in the Black category, and in the Asian or Pacific Islander category were not affected by the introduction of the multiracial option in the CPS Supplements.

BILLING CODE 3110–01–M

Table 3.1 Racial Distribution from the First Question in the CPS Supplement Assessing Racial Identity (In percent)

Race/Ethnicity	Panel			
	1	2	3	4
White	79.88	79.74	75.78	74.66
Black	10.29	10.66	10.60	10.27
Hispanic	-	-	7.53	8.20
American Indian/Eskimo/Aleut	0.97	0.73	1.06	0.79
Asian/Pacific Islander	3.83	3.25	3.25	3.30
Something Else	4.68	3.70	1.50	0.92
Don't Know/Not Applicable	0.34	0.26	0.28	0.32
Total Multiracial	-	1.65	-	1.55
Totals	100.00	100.00	100.00	100.00

Panel 1 - separate Hispanic question, no multiracial category
Panel 2 - separate Hispanic question, multiracial category
Panel 3 - no separate Hispanic question, no multiracial category
Panel 4 - no separate Hispanic question, multiracial category.

From Tucker et al., 1996.

BILLING CODE 3110–01–C

National Content Survey. In the NCS, the race question included a multiracial category (using the term ''multiracial or biracial'') in two of four panels. The percent of respondents identifying themselves as multiracial on the NCS was 1.2 percent on the panel with the race question first (Panel 2), and 1.1 percent on the panel with the Hispanic-origin question first (Panel 4). Thus, as in the CPS, less than 2 percent of the total population chose the multiracial category on the NCS. Hispanics on the NCS were more likely than the total population to identify as multiracial (6.7 percent in Panel 2 and 10.0 percent in Panel 4).

The addition of a multiracial category had no statistically significant effect on the percentage of persons who reported as White, as Black, as American Indian, or as Asian or Pacific Islander regardless of whether the race or the Hispanic-origin question was asked first. However, the relatively small sample size in the NCS might not detect changes that were substantively important for small populations.

For example, although not statistically significant, the declines in the proportion reporting in the Asian or Pacific Islander category, from 4.0 percent to 2.7 percent in panels where the race question came first, and from 3.4 percent to 2.8 percent when the Hispanic-origin question was asked first, suggested that further analyses should be undertaken. An analysis of the Asian or Pacific Islander write-in responses for those who reported in the multiracial category revealed that if these write-in responses had been reported solely as Asian or Pacific Islander, the proportion of the population in that category would have increased to about 3 percent. These findings, however, cannot be used to draw a firm conclusion about the effects of adding a multiracial category on reporting as Asian and Pacific Islander because the sample sizes were too small.

Adding a multiracial category significantly decreased reporting in the ''Other race'' category when race was asked first, from 3.3 percent to 1.7 percent. Reporting as ''Other race'' decreased only 0.3 percent with a multiracial category when the Hispanic-origin question was asked first.

Race and Ethnic Targeted Sample. The RAETT used a total of eight panels, Panels A through H (with A as the control panel). Three of the panels specifically tested the effects of reporting more than one race. In Panel B, the RAETT tested the effects of including a ''multiracial or biracial'' category. In Panel C, it tested the effects of instructing respondents to ''mark one or more'' in response to the race question; and in Panel H, it tested the effects of instructing respondents to ''mark all that apply'' in response to the race question. The results are discussed in succeeding sections of this chapter.

To determine the effects of including a multiracial category, responses to Panel B are compared with responses to Panel A. The findings indicate that the availability of the option to report as ''multiracial or biracial'' had the most substantial effect in the Asian and Pacific Islander and in the Alaska Native targeted samples. In the other targeted samples, use of the multiracial category had no significant effect on how race was reported. The percentages using the multiracial category in each of the other targeted samples were under 1.0 percent for the White ethnic and the Black targeted samples, 2.33 percent for the Hispanic targeted sample, and 3.67 percent for the American Indian targeted sample. (See Table 3.2.)

BILLING CODE 3110–01–M

Table 3.2 Percent Using Multiracial Category, by Targeted Sample

Targeted Sample	"Multiracial or Biracial" Category (Panel B)
White ethnic	0.41
Black	0.95
Hispanic	2.33
American Indian	3.67
Asian and Pacific Islander	7.58
Alaska Native	7.07

From Bureau of the Census, 1997.

BILLING CODE 3110–01–C

In the Asian and Pacific Islander targeted sample, 7.58 percent in Panel B selected the multiracial category, and another 3.06 percent marked more than one race, even though they were instructed to mark only one. The corresponding percentages in the Alaska Native targeted sample were 7.07 percent and 6.32 percent.

The RAETT results show that, if there were the addition of a new category (e.g., multiracial), the proportion reporting in at least one of the current categories may be reduced. In the Asian and Pacific Islander targeted sample, about 2 percent fewer reported in the White (only) category in Panel B, and about 4.5 percent fewer reported in the Asian and Pacific Islander (only) category. Within the Asian and Pacific Islander category, the Hawaiian and the Asian Indian categories had the largest drops in reporting from Panel A to Panel B. However, the response rate for the Asian and Pacific Islander targeted sample was only 55 percent, and the possible impact of nonresponse bias on these comparisons is not known without further research. (See Table 3.3.)

BILLING CODE 3110–01–M

Table 3.3 Comparison of Panel A and Panel B (With a Multiracial Category) for the Asian and Pacific Islander Targeted Sample, by Race: 1996 RAETT

Race	Count or Estimate		Difference (Panel B minus Panel A)
	No multiracial response option (Panel A)	"Multiracial or Biracial" category (Panel B)	
White ethnic	20.56	18.47	* -2.09
Black	5.99	6.05	0.07
American Indian and Alaska Native	0.31	0.36	0.06
Asian and Pacific Islander	64.95	60.48	* -4.47
Chinese	17.76	17.50	-0.26
Filipino	19.72	18.71	-1.01
Hawaiian	9.20	5.48	* -3.72
Korean	1.55	1.59	0.05
Vietnamese	1.40	1.50	0.10
Japanese	8.21	8.22	0.00
Asian Indian	1.24	0.48	* -0.76
Samoan	1.01	1.37	0.36
Guamanian	0.00	0.29	* 0.29
Other Asian and Pacific Islander	4.85	5.33	0.47
Other race	4.44	4.00	-0.44
Multiracial	--	7.58	--
Unrequested multiple response	3.76	3.06	-0.70

* An asterisk indicates that the difference is statistically significant at the 90-percent confidence interval assuming there is no bias due to a low response rate. From Bureau of the Census, 1997, Table 1-4R, p. D-6.

BILLING CODE 3110–01–C

In the Alaska Native targeted sample, the response rate was only 34 percent, leading again to the possibility of nonresponse bias and the need for further research. This, and the fact that the percent reporting White (only) increased by about 4.5 percent with the addition of a multiracial category, suggests that the group reporting in Panel A was different in some way from the group reporting in Panel B. In this targeted sample, the multiracial category drew primarily from the American Indian and Alaska Native category. (See Table 3.4.)

BILLING CODE 3110–01–M

Table 3.4 Comparison of Panel A (No Multiracial Category) and Panel B (With a Multiracial Category) for the Alaska Native Targeted Sample, by Race: 1996 RAETT

Race	Count or Estimate		Difference (Panel B minus Panel A)
	No multiracial response option (Panel A)	"Multiracial or Biracial" category (Panel B)	
White	12.55	16.99	4.44
Black	0.56	1.05	0.49
American Indian and Alaska Native	79.36	65.26	*-14.10
Asian and Pacific Islander	2.23	3.16	0.93
Other race	0.14	0.15	0.01
Multiracial	--	7.07	--
Unrequested multiple response	5.16	6.32	1.16

* An asterisk indicates that the difference is statistically significant at the 90-percent confidence interval as long as there is no bias due to a low response rate. From Bureau of the Census, 1997.

BILLING CODE 3110–01–C

3.4.3 If a Multiracial Category Is Listed, Should a ''Follow-Up'' Format Be Used, in Which Individuals Who Select the Category Are Asked To Specify Their Racial Identities?

All three of the major research surveys—the CPS Supplement, the NCS, and the RAETT—used a two-part question to evaluate the effects of a follow-up question on reporting by different racial groups.

CPS Supplement. The responses on the CPS Supplement to the follow-up question for individuals who identified themselves as multiracial are shown in Table 3.5.

BILLING CODE 3110–01–M

Table 3.5 Racial Distribution from First Question in CPS Supplement Assessing Racial Identity, Detailed Identification for "Multiracials" in Panels 2 and 4 (In percent)

Breakdown of Responses to a Follow-up Question	Panel 2	Panel 4
"Something else" as only one race	0.51	0.22
Only 1 race (of those provided)	0.53	0.15
White-Black/Black-White	0.09	0.16
American Indian + 1 race	0.20	0.28
Asian/Pacific Islander + 1 race	0.07	0.28
1 race + Something else	0.16	0.07
Other 2 races	0.00	0.20
3 or more races	0.08	0.21
No race/don't know/not applicable	0.02	0.00
Total Multiracial Responses	1.65	1.55

From Tucker, et al., 1996.

BILLING CODE 3110–01–C

With the exception of respondents who named only one race, the ''American Indian + one other race'' group had the highest frequency in both panels, followed by ''Asian/Pacific Islander + one race'' on Panel 4. All but a small percentage of the Hispanics who used the multiracial category reported only an Hispanic ethnic group. (McKay, Stinson, de la Puente, and Kojetin, 1996)

More than 60 percent of multiracial responses on Panel 2 and close to 20 percent of multiracial responses on Panel 4 did not provide two or more different races. Respondents who reported only a single race, or reported ethnicities as races, were designated as ''unconfirmed multiracials.'' With the addition on an Hispanic category, there was a 90 percent decline among Hispanic ''unconfirmed multiracials'' between Panels 2 and 4. There was also a 60 percent decline in such entries for non-Hispanics between Panels 2 and 4, which is not readily explained by the presence of the Hispanic category on Panel 4. (See Table 3.6.)

The decline in ''unconfirmed multiracials'' among Hispanics in Panel 4 may reflect the effect of the combined race and Hispanic origin question on Hispanic reporting. In the case of non-Hispanics, the decline might result from the absence of the influence of a preceding Hispanic origin question.

BILLING CODE 3110–01–M

Table 3.6 Percentage "Multiracials" and "Unconfirmed" Multiracials

	Panel 2 (separate questions)		Panel 4 (combined questions)	
	Multiracial	"Unconfirmed" Multiracials	Multiracial	"Unconfirmed" Multiracials
Named 1 race in response				
Hispanic	2.21	10.73	0.00	0.71
Non-Hispanic	4.81	45.77	5.15	17.02
Named 2 or more races in response				
Hispanic	3.53	4.60	22.79	0.00
Non-Hispanic	26.02	2.33	52.46	1.88
Totals	36.57	63.43	80.40	19.60

From McKay, Stinson, de la Puente, and Kojetin, 1996.

BILLING CODE 3110–01–C

Researchers were able to compare the racial identification of CPS respondents on the CPS control card, which represents the current time series, with their racial identification on the CPS Supplement. Table 3.7 displays the results.

BILLING CODE 3110–01–M

Table 3.7 Racial Identifications on CPS Control Card and CPS Supplement

Panel	Race on CPS Control Card	Race on CPS Supplement			
		Same Race	Another race	"Something Else"	"Multiracial"
1	White	95.80	1.15	3.05	---
	Black	95.02	1.84	3.14	---
	American Indian, Eskimo, or Aleut	74.50	20.78	4.72	---
	Asian or Pacific Islander	90.91	3.06	6.03	---
2	White	95.64	0.88	2.34	1.15
	Black	93.70	1.65	1.89	2.77
	American Indian, Eskimo, or Aleut	58.94	34.44	2.38	4.24
	Asian or Pacific Islander	92.67	1.80	3.70	1.83
3	White	91.28	7.82	0.82	---
	Black	94.72	2.21	3.06	---
	American Indian, Eskimo, or Aleut	71.98	22.94	5.07	---
	Asian or Pacific Islander	88.01	5.49	4.88	---
4	White	90.15	8.38	0.54	0.92
	Black	94.62	2.07	0.94	2.36
	American Indian, Eskimo, or Aleut	61.71	27.84	2.51	7.94
	Asian or Pacific Islander	86.00	2.70	4.35	6.93

From Tucker et al., 1996.

Note: The percentage distribution of the other races for "American Indian, Eskimo, Aleut" respondents in the CPS Supplement was as follows: Panel 1: White, 17.89; Black, 0.64; Asian or Pacific Islander, 0.70; Panel 2: White, 22.10; Black, 10.17; Asian or Pacific Islander, 1.95; Panel 3: White, 14.24; Black, 0.63; Asian or Pacific Islander, 3.50; Hispanic, 4.57; Panel 4: White, 14.44; Black, 2.52; Asian or Pacific Islander, 1.98; Hispanic, 7.43.

BILLING CODE 3110–01–C

As reported above, only the percent of people identifying as American Indian, Eskimo, or Aleut was significantly smaller when a multiracial category was used. However, the largest movement from the American Indian, Eskimo, or Aleut category is always to the White category. (See Note to Table 3.7.) Only 4.24 percent of this group used the multiracial category on Panel 2. On Panel 4, 7.94 percent of those identifying with this group on the CPS Supplemental selected multiracial while 7.43 percent chose Hispanic. In sum, a large number of individuals of mixed American Indian and White ancestry changed their racial identification on the CPS Supplement but not necessarily to the multiracial category. This change had a noticeable effect on the American Indian, Eskimo, and Aleut population counts without noticeably affecting counts of the White population.

Researchers analyzed the distribution of CPS Supplement respondents choosing the multiracial category by State to consider whether State legislative requirements for a multiracial category on State records influenced the frequency with which this category was chosen. At the time of the study, Georgia was the only State with a law requiring a multiracial category; six other States (Florida, Illinois, Indiana, Michigan, North Carolina, and Ohio) were in the process of framing legislation requiring a multiracial category. The highest percentage of CPS respondents choosing the multiracial category for these States was 1.5 percent. Among other States, the five with the highest percentage of respondents choosing the multiracial category were: Hawaii, Nevada, Washington, Tennessee, and Alaska. Of these, Hawaii was the highest, with 11.6 percent; the others had percentages between 3.0 percent and 4.7 percent.

The CPS Supplement data were also analyzed to consider the effect of having parents of different races on the reporting of the racial identity of children. Of the CPS households, less than 1 percent involved married partners of different races with children under the age of 16 in the household. About 13 percent of these households involved an Asian/Pacific Islander mother and White father; about 11 percent, a White mother and Black father; about 9 percent, a White mother and multiracial father; about 8 percent, an Hispanic mother and White father; and about 8 percent, a multiracial mother and White father. Almost 32 percent of the children in these households identified as ''multiracial.''

National Content Survey. In the National Content Survey (NCS), virtually all persons (98 percent) who marked the multiracial category in the panels that included this category provided a write-in response. More than half of these write-in responses (55 percent) identified two or more different races, and about a third showed a racial category and a Hispanic-origin group. The remainder of the write-in responses indicated only one of the racial categories specified in Directive No. 15.

The vast majority (more than 80 percent) of the write-in responses to the multiracial category included White. (This result is consistent with research on interracial and inter-ethnic marriages and households, which usually involve one White spouse (92 percent) or White parent (86 percent).) About 30 percent of the write-in responses included the Asian or Pacific Islander category, about 25 percent involved the Black category, and about 7 percent involved the American Indian category. If the Asian and Pacific Islander write-ins to the multiracial category had been tabulated solely as Asian and Pacific Islander, the proportion of the population in that category would have increased to about 3 percent, still smaller than the 4 percent who selected Asian and Pacific Islander in Panel 1, without a multiracial category.

Race and Ethnic Targeted Test. Information from the write-ins for panels, B, D, E, F, and G in the RAETT was tabulated in accordance with the ''historical series'' and the ''all inclusive'' approaches described in section 3.4.1. The results are useful in assessing the extent to which write-ins can be used to provide the bridges to the distributions provided by the current classifications. These results are described in other parts of this report.

3.4.4 Should a Multiple-Response Format Be Used, in Which the Respondent is Instructed to ''Mark One or More Races?

Another option for collecting data is to allow respondents to select more than one race. Some suggest that this approach has the advantage of preserving detailed data about racial identification that might not be captured with a single multiracial response category, even with write-in lines. This section discusses one instruction that respondents might be given; the next section discusses an alternative instruction. Only the RAETT tested these alternative approaches.

Race and Ethnic Targeted Test—Panels A and B. In the RAETT, some respondents marked more than one box on Panels A and B, despite the instruction on both panels to ''mark one box . . .'' (Panel B included a ''multiracial'' category; Panel A did not.) Reporting multiple races on Panel A was especially high in the Alaska Native targeted sample (5.16 percent). This percentage nearly approached the percentage who selected the multiracial category on Panel B in this targeted sample (7.07 percent). Multiple responses on Panel A were also substantial (3.76 percent) in the Asian and Pacific Islander targeted sample. (By comparison, it is estimated that 0.5 percent of respondents to the 1990 census selected more than one race when asked to select only one.)

In the targeted samples of the RAETT, the lowest frequency of marking multiple races on panels with instructions to ''mark one box'' was 0.7 percent in the Black targeted sample. In the Asian and Pacific Islander targeted sample, persons who were born in the United States were far more likely to report multiple races than the foreign-born.

In addition, respondents in all of the targeted samples marked one or more boxes even for the panel that included a multiracial category. That finding suggests that marking multiple races may have a different meaning to some respondents than identifying in a category labeled ''multiracial.''

Race and Ethnic Targeted Test—Panel C. In the RAETT, Panel C instructed respondents to ''mark one or more'' races. The percentages in each of the targeted samples that provided multiple responses were under 2 percent for the White ethnic targeted sample and the Black targeted sample, 3.57 percent for the Hispanic targeted sample, 4.22 percent for the American Indian, and 10.03 percent for the Asian and Pacific Islander target sample. Approximately the same percentage marked only the Asian and Pacific Islander category in Panel C as selected only that category in Panel A. (The Alaska Native targeted sample did not receive the option to mark one or more.) (See Table 3.8.)

BILLING CODE 3110–01–M

Table 3.8 Percent Reporting Multiple Responses in the "Mark One or More Races" Option (Panel C), by Targeted Sample

Targeted Sample	Multiple Response "Mark one or more" instruction (Panel C)
White ethnic	1.35
Black	1.80
Hispanic	3.57
American Indian	4.22
Asian and Pacific Islander	10.03
Alaska Native	(N/A)

(NA) Not available. From Bureau of the Census, 1997.

BILLING CODE 3110–01–C

3.4.5 Should a Multiple Response Format Be Used in Which the Respondent is Instructed to ''Mark All That Apply'' on the Race Question?

Respondents evidently interpreted the instruction to ''mark all that apply'' somewhat differently than the instruction to ''mark one or more.''

Race and Ethnic Targeted Test—Panel H. The percentages in each of the RAETT targeted samples that provided multiple responses in the ''mark all that apply'' option were under 2.0 percent for the White ethnic and the Black targeted samples, 2.24 percent for the Hispanic, 4.27 percent for the American Indian, and 11.47 percent for the Asian and Pacific Islander targeted samples. The Alaska Native targeted sample did not receive this option. (See Table 3.9.)

BILLING CODE 3110–01–M

Table 3.9 Percent Reporting Multiple Responses in the "Mark All That Apply" Option (Panel H), by Targeted Sample

Targeted Sample	Multiple Response: "Mark all that apply" instruction (Panel H)
White ethnic	1.23
Black	1.71
Hispanic	2.24
American Indian	4.27
Asian and Pacific Islander	11.47
Alaska Native	(NA)

(NA) Not available. From Bureau of the Census, 1997.

BILLING CODE 3110–01–C

In contrast to Panel C, significantly fewer respondents in the Asian and Pacific Islander targeted sample in Panel H, with the ''mark all that apply'' instruction, selected only the Asian and Pacific Islander category than was the case in Panel A. (See Table 3.10.) If those who marked Asian and Pacific Islander in combination with another category are included with those who marked only Asian and Pacific Islander, the percentages are about the same. The ''historical series'' approach, described in section 3.4.1 above, also largely eliminated these reductions in reporting. With this tabulation of responses, the percentages reporting as Asian and Pacific Islander on Panel H no longer differed significantly from the percentage on Panel A.

BILLING CODE 3110–01–M

Table 3.10 Percent Distribution of Reporting by Race in the Asian and Pacific Islander Targeted Sample by Option for Reporting More Than One Race

Race	No multiracial category (Panel A)	"Multiracial or Biracial" category (Panel B)	Reporting More Than One Race	
			"Mark one or more" instruction (Panel C)	"Mark all that apply" instruction (Panel H)
White	20.56	18.47	16.90	19.72
Black	5.99	6.05	4.06	6.11
American Indian and Alaska Native	0.31	0.36	0.13	0.44
Asian and Pacific Islander	64.95	60.48	64.76	58.25
Chinese	17.76	17.50	17.47	17.75
Filipino	19.72	18.71	19.58	17.55
Hawaiian	9.20	5.48	4.66	3.87
Korean	1.55	1.59	1.51	1.32
Vietnamese	1.40	1.50	0.84	0.34
Japanese	8.21	8.22	8.75	7.50
Asian Indian	1.24	0.48	0.74	0.98
Samoan	1.01	1.37	1.27	1.36
Guamanian	0.0	0.29	0.0	0.0
Other Asian and Pacific Islander	4.85	5.33	9.93	7.57
Other race	4.44	4.00	4.12	4.01
Multiracial	(NA)	7.58	10.03	11.47
Unrequested multiple response	3.76	3.06	(NA)	(NA)

(NA) Not available.

Note: The sample size for Panels A and B is approximately the same, and is approximately twice the sample size of Panels C and H.

From Bureau of the Census, 1997.

BILLING CODE 3110–01–C

3.4.6 Are there Other Options for Reporting more than One Race by Respondents?

Another option for addressing concerns about reporting multiple races would be to add the category ''Other'' to the list of races in all Federal data collections. As discussed in Chapter 1 of this report, in 1988, OMB considered a proposal to add ''Other'' to the list of races. Comments at that time indicated that the proposal was controversial and consensus would not be easily reached. The debate over the ''Other'' category has continued in the current review of racial and ethnic categories. Some who commented expressed support for the adoption of an ''Other'' category—if it is open-ended, allowing the identification of biracial and multiracial people and ethnic groups who do not identify with one of the major race groups. Others viewed use of the term as demeaning, or stated that the category was unnecessary or that it was too broad to be of much use. (OMB **Federal Register** notice, 1995)

A special exemption from Directive No. 15, granted by OMB, allows the Bureau of the Census to collect data using an ''Other race'' category, and that category was included in the 1980 and 1990 decennial censuses. In the 1990 Census, more than 250,000 Americans wrote in—as their race designation—a combination of races or used a term such as ''Eurasian'' that indicates two or more races.

Under its special exemption, the Bureau of the Census does not assign the ''Other race'' responses to the Directive No. 15 race categories. The Bureau has, however, developed a Modified Age-Race-Sex (MARS) file that assigns respondents to the standard race categories in order to provide data comparable to vital statistics and other statistical sources. In developing the MARS file, the Bureau of the Census used a complicated set of algorithms. If OMB were to establish a new classification system that provided the ''Other race'' option, a standard algorithm might be needed across agencies. Alternatively, agencies could simply list ''Other race'' in tabulations. (National Research Council, 1996)

3.5 Trends With Respect to Reporting Multiple Races

3.5.1 Trends Contributing to Reporting of Multiple Races

As noted earlier in this chapter, a significant number of respondents select more than one race even when asked to select only one. At least two trends may be contributing to this phenomenon.

3.5.1.1 Increases in Interracial Marriages and Households and Births to Parents of Different Races

Some of the impetus for considering an option that allows the reporting of more than one race comes from the increasing number of interracial marriages and births to parents of different races in the past 25 to 30 years. Allowing individuals to report more than one race could provide a more complete report of the Nation's changing society.

Data suggest that individuals from smaller racial population groups are more likely to form interracial unions with individuals from outside their racial population group than are individuals from the White and the Black populations. The White population is such a large proportion of the total United States population, however, that in most interracial marriages one partner is White; similarly, for most children with parents of different races, one parent is White.

- In the 1970 census, there were about 321,000 interracial unions. By 1980, the number had increased to about 1 million; and by 1990 there were about 1.5 million interracial couples. In all but 8 percent of these interracial couples, one spouse (or unmarried partner) was White. In 14 percent of all interracial couples, the non-White spouse was Black; in 22 percent, American Indian and Alaska Native; in 31 percent, Asian and Pacific Islander; and in 25 percent, ''Other race'' (most of whom were of Hispanic origin).
- Census data indicate that the number of children in interracial families grew from less than one-half million in 1970 to about 2 million in 1990. In 1990, in interracial families with one white partner, for about 34 percent of all children the other parent was American Indian; for 45 percent the other parent was Asian; and for about 20 percent the other parent was Black.
- In 1968, for 2 percent of the births with at least one Black parent, the second parent was reported as White on the birth certificate (8,800). This percentage had increased to 9 percent in 1994 (63,000). Analysis of the change in the numbers of births where one parent is Black and the other is some other race is complicated by the increasing number of birth for which the race of the second parent, usually the father, is not given on the birth certificate—40 percent in 1994, compared with 24 percent in 1968. (See Graph 3.1, Births to Minority and White Parents as a Percent of All Births to Minority Parents by Race of Minority Parent: 1968 to 1994.)
- Even with this limitation it can be inferred, from births for which both parents' races are known, that births involving one Black parent and a second parent of another race other than White also are increasing.
- Among births to American Indian and Alaska Native parents, a high percentage of all births involve a second parent of another race. In 1968, 28 percent of all the births with at least one American Indian or Alaska Native parent listed the second parent as White on the birth certificate (6,900); in 1994 it was 45 percent (23,000).
- Among births to Asian or Pacific Islander parents, the percentage of births in which the second parent was listed as White was 28 percent in 1968, about 32 percent between 1971 and 1979, and 26 percent in 1994.

BILLING CODE 3110–01–M

Graph 3.1 Comparison of Births In Which One Parent is White and the Second Parent is American Indian/Alaska Native, Asian or Pacific Islander, or Black as a Percentage of All Births in Which Either Parent Is American Indian/Alaska Native, Asian or Pacific Islander, or Black: 1968 to 1994

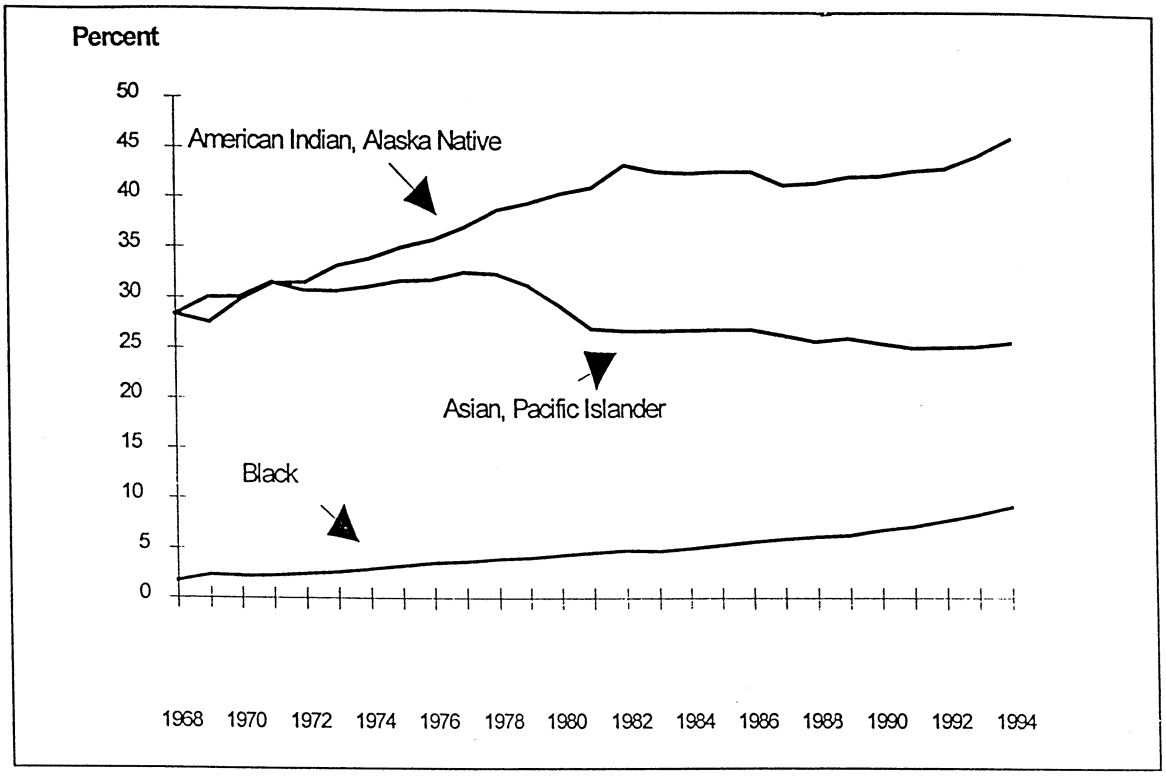

BILLING CODE 3110–01–C

3.5.1.2 State Requirements for Multiracial Reporting

Legislative activity at the State level generates further impetus for considering a modification to the Federal standard to provide reporting of more than one race. Advocacy groups for multiracial persons have lobbied many State legislatures for laws to add a multiracial category to all forms and applications used to collect information on race and ethnicity.

Due at least in part to these advocacy efforts, Georgia, Indiana, and Michigan require the use of a stand-alone multiracial category (Georgia since 1994 and Indiana and Michigan since 1995). In these States, the requirement applies to all State forms and applications used to collect data on race and ethnicity, including health department forms. Ohio and Illinois have similarly adopted legislation adding a multiracial category, but these laws affect only school forms that collect data on race and ethnicity. Florida and North Carolina have added a multiracial category (by administrative directives) to school forms that collect information on race and ethnicity.

At least nine other States are considering legislation to add a reporting category of multiracial: California, Massachusetts, New Jersey, New York, Oklahoma, Oregon, Pennsylvania, Texas, and Wisconsin. In Maryland, a bill adding a multiracial category was passed by the legislature in 1995, but was voted by the Governor; a task force has been established to review the issue.

State law enacted thus far specify that it is a Federal agency does not accept the multiracial data as a category, then the reporting State agency is to reclassify individuals identified as multiracial to racial or ethnic classifications approved by the Federal agency according to the racial and ethnic distribution of the general population. The term ''general population'' is not defined in the legislation.

3.5.2 Public Sentiment

Some advocacy groups support adding a category called ''multiracial.'' They represent, for the most part, persons who identify themselves as multiracial, or person who want to identify their children as multiracial in cases where the parents are of different races. Some are highly critical of an approach that allows for the reporting of only one racial category. This approach, they say, forces children to deny the racial heritage of one parent, thereby adversely affecting self-esteem, sense of family, pride, and psychological well-being. (OMB **Federal Register** notice, 1995)

Public comment on how to allow for the reporting of more than one race has ranged from suggestions for a specific category called ''multiracial'' (without further specification of races) to a preference for identification by listing more than one race (with or without a category called ''multiracial''). (OMB **Federal Register** notice, 1995.)

In some respects, the consequences of adding a multiracial category or of providing an option to report more than one race might be minor. At present, less than 2 percent of the general U.S. population identifies as ''multiracial'' when the category is included as a response option. Thus, it would be less disturbing to historical data series to add a multiracial category soon, while the size of the population reporting would cause only small changes in data series. A decade or two from now, the multiracial population will be larger and the disturbance to historical series correspondingly greater.

3.6 Measurement Concerns and Opportunities Related to Reporting More Than One Race

3.61 Meeting Legislative and Program Needs

Many Federal agencies use data on race and ethnicity for policy development, program evaluation, and civil rights monitoring and enforcement. A number of these agencies are concerned that adding a new multiracial category, or allowing individuals to report more than one race, could affect the comparability and historical continuity of data series that they rely on to meet their mandates or missions. Some of the concern is related to uncertainty about how the new data (if a new multiracial category were provided) would be reported or how the multiple responses (if respondents were allowed to report more than one race) would be tabulated. For example, in the employment area, representatives of the Equal Employment Opportunity Commission (EEOC) have indicated that adding a multiracial category or using an instruction that permits reporting more than one race could affect the historical comparability of data used for resolving complaints and charges as well as for research, making it difficult particularly to analyze trends.

Other Federal agencies that measure and report on various conditions suggest that the interest in the reporting of multiracial information reflects a growing phenomenon that will have to be addressed sooner or later. In the health field, for example, it is important to collect comprehensive data about the racial heritage of individuals. Studies have indicated that rates of low birth weight, very low birth weight, pre-term delivery, and small-for-gestational-age—key indicators of children's health status—were highest when both parents were Black, followed by rates for children with Black mother/White father, White mother/Black father, and both parents White. (Carter-Pokras and LaViest, 1996) In the context of health research, a Federal standard that permitted the reporting of more than one race could better accommodate efforts to identify individuals at high risk for certain medical conditions.

Another example of reporting more than one race is provided by the National Health Interview Survey (NHIS) which since 1982 has been collecting responses on more than one race through the use of a two- part question. The first allows respondents to select the race of races with which they identify from among those listed on a hand card. Persons who identify more than one race are given a follow-up question which asks them to pick the race that best describes them, and the information from both questions is entered into the person's electronic record. In the surveys that were fielded through 1996, only the first two races circled in the first question and the race that best described the respondent are available for analysis. (The 1997 redesign of the NHIS enables the inclusion of up to five of the races reported in the first question, as well as the race that best describes the respondent.) For persons who reported multiple races, information on the race the best describes them (i.e., that race obtained from the follow-up question) is used to prepare statistics for NHIS publications.

However, an analysis of the data from the first NHIS question asked of multiracial persons (see Table 3.11) revealed the following:

- From 1982–1994, an average of 1.4 percent, nearly 1,500 persons out of a sample of 100,000 per year, reported more than one race in the NHIS. The annual proportion of persons reporting multiple races ranged from 1.2 to 1.8 percent.
- For person reporting more than one race, the most commonly reported combination was White and Aleut, Eskimo, or American Indian (55 percent).
- About 11.4 percent of respondents who reported more than one race did not select a single race that best represented their background. This group represents 0.2 percent of the total population.

BILLING CODE 3110–01–M

Table 3.11 Weighted number and proportion of persons reporting race by survey year, NHIS, 1982 to 1994

Year	Estimates of persons reporting race (number in thousands, percent)[1]				
	One race		More than one race[2]		Total number reporting at least one race[3]
	Number	Percent	Number	Percent	
1982	222,831	98.8	2,688	1.2	225,625
1983	224,912	98.7	2,918	1.3	227,868
1984	226,703	98.6	3,091	1.3	229,980
1985	229,240	98.7	2,996	1.3	232,256
1986	231,986	98.7	2,801	1.2	234,999
1987	233,810	98.7	2,915	1.2	236,785
1988	235,142	98.7	3,200	1.3	238,367
1989	237,893	98.6	3,501	1.5	241,396
1990	240,924	98.8	3,013	1.2	243,958
1991	243,191	98.7	3,282	1.3	246,519
1992	245,447	98.5	3,669	1.5	249,267
1993	248,081	98.5	3,668	1.5	251,939
1994	249,604	98.0	4,527	1.8	254,599
Average (all years)		98.6		1.4	

1 Percentages may not add up to 100.0 percent because of rounding or because persons for whom the first and second reported races are in the same race category are included in the total but not in the multiple-race column.

2 The count excludes persons for whom the first and second reported races are in the same race category.

3 The count includes persons who reported a first, second, and/or main race, including those for whom the first and second reported race are in the same race category.

BILLING CODE 3110–01–C

3.6.2 Defining and Using the Term ''Multiracial''

A Federal standard adding a ''multiracial'' category would have to address issues of terminology and definition as well as the issue of whether or not data on specific races would be collected in addition.

3.6.2.1 Definition of ''Multiracial''

In the five States that have enacted ''multiracial'' legislation, the laws call for use of the term ''multiracial.'' (The same is true in several other States where legislation is pending.) Georgia, Indiana, and Michigan have defined ''multiracial'' as involving parents of different races. In pending legislation, California defines the term ''multiracial'' as meaning an individual whose biological parents, grandparents, or great-grandparents are of more than one race.

The research findings on the terminology preferred by persons of more than one race are inconclusive. The May 1995 CPS Supplement on Race and Ethnicity indicates that almost the same percentage of multiracial persons preferred the term ''multiracial'' (28.4 percent) as stated ''no preference'' (27.8 percent); ''Mixed race'' was preferred by 16.0 percent, ''More than one race'' by 6.0 percent, and ''Biracial'' by 5.7 percent.

Other evidence about terminology comes from a study sponsored by the National Center for Health Statistics involving women whose parents were of different races. The mail and telephone survey interviewed 763 women, some of whom were of mixed racial or Hispanic background, who had had a baby within the preceding three years. Among the respondents, 393 had parents of different races, 149 had one Hispanic parent, and 221 had parents who were either both Hispanic or non-Hispanic and who were of the same race. The study found that the women were more likely to enter two or more specific races than to use a term like ''multiracial.'' (Cantor *et al.*, 1997)

If the Federal Standard were to provide for the use of a ''multiracial'' category, it would be necessary not only to agree on the definition but also to communicate the instructions clearly to respondents as well as interviewers. More emphasis would need to be placed on drafting instructions. The experiences of the States in trying to define the term and the data from the CPS Supplement and the NCS suggest that some confusion exists about the meaning of ''multiracial.'' Absent a generally accepted understanding of the term, confusion could be expected if a ''multiracial'' category were to be listed among the response options. Most Americans are probably of mixed ancestry, depending on how ancestry is defined, and could confuse ancestry or ethnicity with race. (Also see the discussion in Chapter 4 regarding the concepts of race and ancestry, in regard to the Hispanic population.)

3.6.2.2 Using a Stand-Alone ''Multiracial or Biracial'' Category or Including a Follow-up Question

The research results indicate that between 1.0 and 1.5 percent of respondents select a multiracial category when offered the opportunity to do so. Providing an option to report by means of a multiracial category with no follow-up question would be responsive to persons who do not want to choose between their different racial heritages. However, since respondents would not be asked to specify their races, it would not be possible to tabulate the responses in the current categories. Concerns about historical continuity of data would not be addressed. While refraining from such a tabulation would be in keeping with self-identification, the responses would provide information of limited utility, particularly for use in health research.

By contrast, a follow-up question would enable the data to be tabulated in the current categories for purposes of historical continuity and trend analysis. Further, with the additional detail, the effects on data for certain groups could be minimized. With a follow-up question, research results suggest that a large percentage of ''multiracial'' responses could be classified into the categories that have been used since 1997.

A related option would be to use a multiracial category with a write-in. Doing so would take up less space but require more coding than a follow-up question. Conversely, using a follow-up question that specified race categories would take up more space but require less coding.

Another option involves the use of the ''Other race'' category, as in the decennial census, with a multiracial example. However, the use of this category is offensive to some respondents, and multiracial individuals still would be unable to self-identity in the manner they have requested. With an ''Other race'' category, a greater amount of coding would be required for the variety of responses.

3.6.3 Using a ''Mark One or More'' or a ''Mark All That Apply'' Instruction in the Race Question

Approximately 0.5 percent of respondents to self-administered surveys, including the 1990 census, already select more than one race, even when asked to select only one. Allowing individuals to report more than one race could increase the accuracy of these data, eliminate some inconsistencies in reporting of race, and improve response rates.

For many Federal agencies, the consequences of implementing the reporting of more than one race could be expected to vary depending on the extent to which responses could be tabulated consistently in accordance with existing racial categories that have been used to meet current legislative mandates. (National Research Council, 1996) If information from multiple responses can be tabulated to the current classifications, the potential for disruption of historical series important to data users would likely be reduced. In particular, such disruption could be minimized if information from persons who have marked multiple boxes could be used to tabulate responses in the race categories currently specified in Directive No. 15. Implementing ''mark one or more'' or ''mark all that apply'' approaches would be less burdensome than having to code data from write-ins. The CPS Supplement found that many people provided write-ins that represented ethnicity rather than races, a factor that would unnecessarily increase processing costs. Either of the multiple response approaches could be expected to reduce this type of misunderstanding about the information being asked. Moreover, lengthy definitions of terms would not be needed, whereas if a ''multiracial'' category were used, instructions would be needed and the wording of the instructions would be extremely important.

3.6.4 Issues Related to Primary and Secondary Data Collections

In many cases, the Federal Government collects data through primary data collections, as in censuses and longitudinal surveys. In primary data collections, agencies rely on essentially two methods for collecting information: by self-identification or by observer identification, which is based on the observer's perception of the most appropriate category in which to report an individual.

With self-identification, individuals would be able to report multiracial backgrounds. In the case of observer

identification, however, the observer would have little basis for a realistic assessment of a person's racial background. In this case, a multiple race response option that called for identification of the particular races (including instructions to ''mark all that apply'') could pose significant data quality problems. This is true today to some extent. For example, American Indians who do not live on or near a reservation are often classified as White or Hispanic.

In other instances, the Federal Government uses secondary data collection, as when it obtains data from institutions and administrative records. Examples include aggregate data collected from colleges and universities on the race and ethnicity of students or degree recipients, or on persons conducting research supported by Federal grants. Reporting could become more burdensome for institutions if individuals who initially provide data to the university were using a multiple response approach. The primary collectors also would need guidance on how to aggregate the raw data into categories specified in the Federal standard.

3.7 Some Implications of Allowing the Reporting of More Than One Race

3.7.1 Possible Effects on Reporting by Particular Population Groups

Data available from the CPS Supplement, the NCS, and the RAETT uniformly indicate that adding a multiracial option—whether by means of a multiracial category or providing for multiple-response options—had little effect on the numbers of people who reported as White or as Black. On the other hand, adding a multiracial category had a substantial effect on the reporting in specific racial categories, such as the American Indian (in the CPS Supplement) and the Alaska Native and the Asian and Pacific Islander populations (in the NCS and RAETT). As noted in section 3.4.1, the Bureau of the Census was able to tabulate substantial percentages of the multiracial responses in the RAETT in the present Directive No. 15 categories using a procedure called the ''historical series'' approach. (However, there still may be some differences remaining.) Whether this ability to tabulate the data could apply in other contexts needs further investigation.

To the extent that providing a multiracial or a multiple-race response option can change reporting, the affected population could experience some consequences. In the case of the American Indian population, for example, the Bureau of Indian Affairs and the Indian Health Service provide assistance to persons who can prove descent from a member of a federally recognized tribe. Tribal governments have expressed concern that the addition of a multiracial category could affect their ability to identify their members. In the case of health statistics, adding a multiracial category could mean that fewer American Indians/Alaska Natives would be counted for both numerators (number of births to American Indian/Alaska Native mothers) and denominators (total number of American Indian/Alaska Natives). (Carter-Pokras, LaViest, 1996; Hahn, 1992)

3.7.2 Tabulation of Multiple Responses

Whether or not OMB modifies Directive No. 15, some respondents will report more than one race. It is important to ensure that the data are treated uniformly. Accordingly, attention needs to be given to establishing rules for tabulating multiple responses to the race question both for purposes of historical comparability and to ensure consistency across Federal agencies.

An algorithm could be used to tabulate responses in the racial categories that are used currently. For example, one option would be to tabulate responses from a multiracial category in proportion to the distributions for the current single-race categories: with a population of 80 Whites, 10 Asians, and 10 multiracial individuals, the resulting numbers would be 89 Whites and 11 Asians. This algorithm would not change the relative sizes of the single-race categories. However, the tabulation would be arbitrary and could misrepresent the multiracial respondents (if for instance the 10 respondents in the multiracial category were the children of Asian/White unions). (National Research Council, 1996) Moreover, even if this method of tabulation would suffice for some purposes, there are others in which it would be necessary to deal with individual records.

Data from the decennial censuses suggest that the way in which children born into interracial families are identified on the race item does not follow the race and ethnicity distribution of the population. Thus, no simple algorithm could assign a single race based on the races of the parents that adequately matches the race now reported for the children. For instance, while only 12 percent of the United States population is Black, 66 percent of the children of Black and White unions have identified as Black in each census since 1970.

As discussed in section 3.4.1, the Census Bureau developed procedures to address the reduced reporting of only a single race in the RAETT that occurred in some targeted samples when a multiracial category or a multiple-race response option was offered. An algorithm is used in tabulating all multiple race responses. The historical series approach tabulates these responses to the Black, the American Indian and Alaska Native, or the Asian and Pacific Islander category (and to the Hispanic category in two of the RAETT panels). When both the White box and either the ''Some other race'' or the ''multiracial'' box were marked, the responses were classified as White. (The extent to which other agencies might be able to implement a similar classification procedure would have to be determined.)

This historical series approach tabulated a large percentage of the multiracial responses in the Directive No. 15 categories. The only targeted sample in which this tabulation did not appear to produce results comparable to the single-race reporting in Panel A was the Alaska Native targeted sample. The historical series noticeably increased the percentages of American Indian and Alaska Native respondents on Panel B (which included a multiracial category) and Panel H (which included a ''mark all that apply'' instruction); however, the percentages remained lower than on Panel A, which did not offer a multiracial option.

In the cases of the decennial censuses, the Bureau of the Census has not tabulated responses of ''Other Race'' in the categories specified by Directive No. 15. As noted above, however, the Bureau has developed an algorithm to create a Modified Age-Race-Sex (MARS) file that tabulates responses in the standard race categories to provide data comparable to other statistical systems.

In some cases, the Federal Government already is dealing with this tabulation issue. In Georgia, Indiana, and Michigan—where the multiracial legislation has general applicability—the requirement to use a multiracial category affects the collection of data on registration certificates for births and deaths and on health survey forms, and it thus affects the reporting of both State and national statistics by race and ethnicity. The National Center for Health Statistics has created a ''multiracial'' code for vital records from States that have passed such legislation. Multiracial persons are coded by NCHS as ''Other'' and, before analysis, all such entries are reallocated through an

imputation method to the standard race categories, consistent with Directive No. 15. (Carter-Pokras, LaViest, 1996)

A study conducted by the U.S. Department of Education as part of the review of Directive No. 15 found that when categories such as ''other'' or ''multiracial'' are used, schools typically aggregate these data into the broad Federal category that is deemed most appropriate by the school staff before reporting the information to the Federal Government. (NCES 96–092)

3.7.3 Monetary Costs and Resource Burdens

Efforts were made to obtain estimates of monetary and other resource costs associated with adding a multiracial response option, whether by adding a multiracial category or by allowing for multiple responses to the race question. Several agencies, members of the Council of Professional Associations on Federal Statistics (COPAFS), and State and local data users belonging to the Association of Public Data Users (APDU) provided views.

Some data collections generally would be more costly and difficult if a multiracial category were added (particularly if the changes included a combined format for Hispanic ethnicity). There could be significant costs associated with the disaggregation of the multiracial category into meaningful population groups for enforcement purposes and comparability with a large volume of historical data. Instructions that allowed counting individuals according to more than one race/ethnic group could make it extremely difficult to perform trend analysis. Agencies noted that some of these costs would be ongoing rather than one-time costs.

Costs associated with adding an option to report multiple races could be expected to vary depending on the reporting technique used. If a multiracial category involved a write-in option, for instance, and the responses were assigned to the major groups, the costs for editing and coding entries could be higher than those for fixed categories. Classification algorithms would have to be written, tested, and harmonized across agencies. Further, coding write-in responses could prove more feasible for major statistical agencies with large data processing resources, such as the Bureau of the Census, than for agencies where the collection of racial and ethnic data is only a small portion of their administrative mandate.

In an informal consultation with BLS staff, COPAFS members suggested that in some cases a change in Directive No. 15 would probably mean only minor effects on data systems, Computer-Assisted Telephone Interviewing software, and sample management systems. Participants in the discussion noted that a variety of computer-based analytic tools would have to be reprogrammed. In cases where general requirements for data collection apply, changes in industry-wide forms (paper and electronics), electronic data transfer conventions, and computer programs would be needed. Estimates of time range from two to three weeks to reprogram and one to two months to re-estimate models.

COPAFS members also were asked about data systems or software that the organizations would have to revise to accommodate a change. The responses ranged from ''only minor changes would be needed'' to ''significant changes would be required.'' Members also noted that changing only the nomenclature from that used in Directive 15 would have little effect on cost. However, adding an ''Other race'' or a multiracial category would be both disruptive and costly. Members said the changes would affect Computer-Assisted Telephone Interviewing software, forms, electronic reporting systems, and resulting databases. The cost would be associated with disaggregating the multiracial category into meaningful groups for enforcement purposes and comparability with a large volume of historical data. Survey processing costs would increase due to the additional editing, coding, and keying of the expanded matrices, and due to the need to redesign the processing systems to account for the additional data. (Tucker, COPAFS, 1996) One participant said the modifications would be handled as part of the massive transition from the 1990 Census to the 2000 census, describing the overall process that occurs once each decade as an arduous one that could be made more complicated by changes to the racial and ethnic categories.

In a meeting with data users from State and local organizations, participants appeared not too concerned about adapting to change. Unless no changes are made to the decennial census, participants noted, they have to rewrite their data analysis programs every ten years—in any event—to conform to the new formats. Participants believed that costs would not be affected to any great extent. (Tucker, APDU, 1996) Most participants ultimately favored an option that would allow for multiple responses to the race question. While recognizing that it would require more work for analysts and data providers, they believed it to be the fairest alternative given our Nation's diverse population. They thought it could be a viable solution, but also expressed interest in having the Federal Government develop rules for tabulating multiple race responses. (Tucker, APDU group, 1996)

Several agencies offered dollar estimates for what it would cost to implement a change in Federal standards that provided for the reporting of more than one race. These ranged from the tens of thousands into the millions of dollars, depending on the approach that might be selected and whether and the extent to which updating of records might be required.

Chapter 4. A Combined Race and Hispanic Origin Question

4.1 Background

This chapter addresses the issue of whether there should be a combined race/Hispanic origin question or whether there should be a separate race question and a separate Hispanic origin question. Included in this chapter is a summary of findings from research recently conducted by the Bureau of Labor Statistics and by the Bureau of the Census on the effects of using a combined format instead of separate questions. The chapter also presents findings from other relevant research that address the issues associated with a combined format versus separate questions. These issues include concerns about data quality that arise when a separate race question and an Hispanic origin question are used, and approaches that have been tested to address these data quality concerns.

Directive No. 15 calls for collection of information on persons of Spanish origin or culture. This information can be collected using two different formats—either a combined race and Hispanic origin question or two separate questions, one for race and one for Hispanic origin. Both approaches are popular among Federal agencies. The Directive also allows Federal agencies to collect data on race and Hispanic origin using separate questions and then to present the data in the combined format.

Even within the same agency, both formats sometimes are used. For example, almost six out of every ten (56 out of 97) data systems listed in the *Directory of Minority Health and Human Services Data Resources* which collect information on Hispanic origin do so using the separate format (Department of Health and Human Services, 1995). Slightly more than half (8 out of 15) of the principal data collections at the Department of Justice

use the combined format. At the Bureau of Labor Statistics in the Department of Labor, some of the surveys use a combined format while others use two separate questions. The Office for Civil Rights in the Department of Education, the Office of Civil Rights in the Department of Health and Human Services, the Equal Employment Opportunity Commission (EEOC), and the Office of Personnel Management (OPM) use the combined format. In its National Health Interview Survey, the National Center for Health Statistics (NCHS) uses two questions for race (check one or more groups, followed by selection of the group which best represents the person's race), and one question for Hispanic origin. The combined format tends to be preferred for data collections using observer identification.

Briefly, according to the Directive, if data on race and ethnicity are collected using two separate questions, the racial categories are:

—American Indian or Alaskan Native
—Asian or Pacific Islander
—Black
—White

And, for ethnicity:

—Hispanic origin
—Not of Hispanic origin

If the combined format is used, the categories are:

—American Indian or Alaskan Native
—Asian or Pacific Islander
—Black, not of Hispanic origin
—Hispanic
—White, not of Hispanic origin

The separate questions are designed to provide Hispanic origin information for all persons. The combined format does not allow for collection of Hispanic origin data if a person reports in the American Indian or Alaskan Native category, or in the Asian or Pacific Islander category.[1] When a combined question is used, data on the race of Hispanics is not collected (see OMB **Federal Register** notice, June 1994).

4.2 Concepts of Race and Ethnicity

The decennial census categories used to classify data on ''race'' and ''ethnicity'' have changed depending on what were considered the population groups of interest. In the 20th century, data on race and ethnicity have sometimes been coded together and at other times have been coded separately. Census researchers Bates, de la Puente, DeMaio, and Martin (1994) have characterized as ''official ambivalence'' the Federal uncertainty ''about whether Spanish-speaking groups should be considered a separate race, or not.'' For example, the census classified Mexicans as a ''race'' in 1930, ''White'' during 1940–1970, and ''of any race'' they chose in 1980 and 1990. In 1940, persons of Spanish mother tongue were reported. In 1950 and 1960, persons of Spanish surname were recorded. By 1960, all Mexicans, Puerto Ricans and other persons of ''Latin descent'' were counted as ''White'' unless they were ''definitely Negro, Indian, or some other race (as determined by observation).'' In 1970, a separate question on Hispanic origin was added to the census long form (sent to one-sixth of households). In 1980 and 1990, a separate question on Hispanic origin was asked of all households.

Directive No. 15 defines ''race'' and ''ethnicity'' as separate concepts. Harry Scarr, then Acting Director of the U.S. Bureau of the Census, stated in his testimony to the Congressional Subcommittee on Census, Statistics and Postal Personnel in April 1993, that although the Bureau treated race and ethnicity as two separate concepts, the ''Bureau recognizes that the concepts are not mutually exclusive * * *'' (Scarr, 1994:7). Dr. Scarr's observation has been well documented in the research literature.[2]

Opinion researchers report that respondents in general—not only Hispanics—find questions about ''race'' and ''ethnicity'' to be among the most difficult to answer. Tom Smith of the National Opinion Research Center concludes, ''Of all basic background variables, ethnicity is probably the most difficult to measure'' (Smith, 1983). Although respondents may give different answers to questions about each concept, researchers have observed that respondents do not understand conceptual differences among terms such as ''race,'' ''ethnicity,'' and others such as ''ancestry'' or ''national origin.'' For example, NCHS reports that interviewers for one of their surveys found that ''* * * the phrase 'origin or descent' was poorly understood by many respondents.'' (Drury, 1980). Researchers at the Bureau of the Census remark that notions of ''race,'' ''ethnicity,'' and ''ancestry'' are not clearly distinguished from one another by census respondents and some persons perceive the race, Hispanic origin, and ancestry questions as asking for the same information.[3]

The terms ''race'' and ''ethnicity'' are frequently used interchangeably in the United States. For most daily and practical applications, Hispanics are considered a race. Definitions of race and ethnicity in major dictionaries often have considerable overlap. Crews and Bindon (1991) suggest that race is a sociological construct that is poorly correlated with any measurable biological or cultural phenomenon other than the amount of melanin in an individual's skin. Ethnicity, they suggest, is a sociocultural construct that is often, if not always, coextensive with discernible features of a group of individuals. Crews and Bindon cite several human biologists who have advocated vigorously for use of the term ''ethnic group'' instead of ''race'' to question hypotheses about the genetic and cultural constituency of groups.

This fluid demarcation between the concepts of ''race'' and ''ethnicity'' and the notion that these concepts are a sociocultural construct observed among the general population is also applicable to the Hispanic population. In fact, researchers such as Clara Rodriguez (1992) have noted that this view of race and ethnicity is consistent with the views of many Hispanics. Numerous other researchers have concluded that the racially diverse Hispanic population regards their ''Hispanic'' identity as a ''racial'' one.[4]

This view of race and ethnicity among Hispanics has its origins in Latin American culture. For example, Rodriguez (1994) observes that in Latin America, there are a greater number of racial terms for ''intermediate'' categories. In contrast, the emphasis in the United States has been on constructing ''pure'' races (e.g., Black and White, and not biracial or multiracial terms). Conceptions of race in Latin America result in the use of more categories since they are based more on ethnicity, national origin, and culture than appearance. Recent studies have found that Hispanics tend to see race as a continuum and use cultural frames of reference when discussing race (e.g., see Bracken and de Bango, 1992; Romero, 1992; Rodriguez and Hagan, 1991).

Unlike the United States where racial formation has evolved from the acceptance and legitimization of the ''one-drop'' rule, if a person looked

[1] In the 1990 Census, 8.4 percent of American Indians or Alaskan Natives and 4 percent of Asian or Pacific Islanders were also Hispanic.

[2] For example see, Gerber and de la Puente (1996), Kissam *et al.* (1993), Rodriguez (1994), and McKay and de la Puente (1995).

[3] This observation has been documented in recent cognitive studies. For example, see Gerber and de la Puente (1995) and McKay and de la Puente (1995).

[4] For example, see Kissam, 1993 and Rodriguez, 1992.

''White'' in Latin America, then this is what they were, regardless of what their ancestors may have looked like or how much blood of a particular non-White group they may have. Race in the Caribbean and Latin America is often viewed as an individual marker, while in the United States it determines one's reference group (Wright, 1994). Latin American countries tend to have a more social view of race as compared with the genealogically based view in the United States. This more social view of race tends to include other physical and social characteristics besides color (e.g., education, social class, and context), and may lead to overlapping categories and different racial taxonomies (Rodriguez and Cordero-Guzman, 1992; Harris et al., 1993).[5]

4.3 Self-Identification

Studies indicate differences between the racial and ethnic classification assessed by self-identification and: (1) Proxy identification by other household members, family, or friends, (2) identification by research or survey interviewers, and (3) identification by the personnel of institutions such as funeral homes. Several studies concentrate on the identification of Hispanic origin, while others focus more broadly on the identification of racial and/or ethnic groups, including Hispanics. Substantial differences have been found between how Hispanics identify themselves and how they are identified by interviewers (Rodriguez and Cordero-Guzman, 1992; Falcon, 1994; Tumin and Feldman, 1961; Rodriguez, 1974; Ginorio, 1979; Ginorio and Berry, 1972; Martinez, 1988).

Hahn, Truman, and Barker (1996) examined the consistency of self-perceived identification at first interview and proxy-reported ancestry at a follow-up interview (an average of 10 years later) in the U.S. population. Ten percent of household proxies did not know the backgrounds of sample persons. Proxy reports of ancestry were consistent with self-classification for 55 percent of sample persons. Consistent classification between proxy and sample person was highest for sample persons classifying themselves as Mexican (98 percent); for other Hispanic groups, consistency was 70 percent. Overall, consistency between self- and proxy-identification was high for several European populations, for Asians, and for Hispanics, but low for American Indians.

In another study comparing self- and interviewer-identification (Drury, Moy, and Poe 1980), researchers compared respondents' self-identified ancestry, including Hispanic categories as well as races, with classification at the same time by an observer (as White, Black, or other). Among self-identified Hispanic groups, between 86 percent and 100 percent were identified by interviewers as White, the remainder as Black or other. A more recent study of the U.S. population (Hahn, Truman, and Barker 1996) compared respondents' self-identified ancestry with race as determined by the interviewer. Among respondents who self-identified as Mexican, 95 percent were classified as White, 5 percent as other; among respondents who self-identified as members of other Hispanic populations, 84 percent were classified as White, 15 percent as Negro. Overall, studies consistently indicate that interviewers are effective in identifying Whites and Blacks, moderately effective in identifying the members of Hispanic groups, and poor in identifying Asians and American Indians.

Other studies have focused on identification by personnel of institutions such as funeral homes. Hahn, Mulinare, Teutsch (1992) compared the race and ethnicity on the birth and death certificates of all U.S. infants born from 1983 through 1985 who died within a year. Among infants designated as Hispanic at birth, 20 percent of Mexicans, 48 percent of Puerto Ricans, and 67 percent of Cubans were likely to have another designation at death; for all Hispanic infants who had different designations on birth and death certificates, more than half were classified as non-Hispanic (White or Black) on death certificates. Observer identification may result in underestimation of mortality for some racial and ethnic groups. For example, when data on Hispanic origin from the birth certificate was used instead of the death certificate, estimates of Hispanic infant mortality were 8.9 percent higher than those based on the death certificate (Hahn 1992).

Similar discrepancies have been reported for U.S. adults. Poe *et al.*, (1993) found that Hispanics were misclassified as non-Hispanic on 19 percent of death certificates. Other studies have also found significant misclassification of Hispanics (Sorlie 1993; Lindan 1990; Massey 1980).

4.4 Some Alternative Formats for Questions

Several alternative formats for questions to collect data on Hispanic origin have been suggested in public comments. Directive No. 15 currently allows two formats for questions on race and ethnicity: a combined format option (referred to as Alternative 1 for the discussion in this section), and two separate questions (Alternatives 2 and 3). Hispanic can be chosen independently of race only when it is a separate question.

Alternative 1: Combined Format (Allowed Under Directive No. 15)

—American Indian or Alaskan Native
—Asian or Pacific Islander
—Black, Not of Hispanic Origin
—Hispanic
—White, Not of Hispanic Origin

Alternative 2: Two Separate Questions With Race Question First (Allowed Under Directive No. 15)

—American Indian or Alaskan Native
—Asian or Pacific Islander
—Black
—White
—Hispanic origin
—Not of Hispanic origin

Alternative 3: Two Separate Questions With Hispanic Origin Question First (Allowed Under Directive No. 15)

—Hispanic origin
—Not of Hispanic origin
—American Indian or Alaskan Native
—Asian or Pacific Islander
—Black
—White

The following two formats are commonly used outside the Federal Government:

Alternative 4:

—American Indian or Alaska Native
—Asian or Pacific Islander
—Black
—Hispanic
—White

Alternative 5:

—Non-Hispanic American Indian or Alaska Native
—Non-Hispanic Asian or Pacific Islander
—Non-Hispanic Black
—Hispanic
—Non-Hispanic White

Variation of these have also been suggested in public comments. For example, some suggested that a ''multiracial'' category could be followed by a list of categories to select,

[5] These views of race are reflected in how Latin American countries collect information on race and ethnicity. In general, those countries with a predominately European culture (e.g., Argentina, Chile, Costa Rica, Uruguay) did not have questions on race/ethnicity on census forms (Almey, Pryor, and White, 1992:7–8). Questions on race and ethnicity were more likely in countries with slavery and plantation histories (e.g., Cuba, Brazil, British Indies). Countries with significant indigenous populations (e.g., Bolivia, Guatemala, Panama) collected data on indigenous and non-indigenous populations.

or a line could be provided to specify the categories. Another alternative which was tested in the Race and Ethnic Targeted Test combined the concepts of race, ethnicity, and ancestry in a two-part single question.

4.5 Research on Data Quality

This section summarizes research that has examined the quality of data on race and Hispanic origin obtained through a separate question for race and a separate question for Hispanic origin. The major data quality measures examined by this research include the reporting of ''other race'' by Hispanics (section 4.5.1), item nonresponse for race (section 4.5.2), item nonresponse for Hispanic origin (section 4.5.3), and inconsistent reporting in both the race and Hispanic-origin items (section 4.5.4). The chapter then turns to measures that have been proposed and tested for addressing the data quality concerns just cited (section 4.5.6).

4.5.1 Reporting in the ''Other Race'' Category by Hispanics

Evaluations of the results from the 1980 Census, the 1980 Current Population Survey, the 1990 Census, the 1990 Panel Study of Income Dynamics, and the 1991 Current Population Survey have shown that approximately 40 percent of Hispanics select the ''Other Race'' category (Denton and Massey, 1989; Tienda and Ortiz 1986; Rodriguez 1992). Research also shows that the use of the ''Other Race'' category varies by Hispanic subgroup and geography (Rodriguez, 1989; Tucker *et al.,* 1996). Almost all (98 percent) of respondents who classified themselves as ''Other Race'' in the 1990 Census were Hispanic (U.S. General Accounting Office, 1993:26). This has raised concern among researchers that Hispanic do not identify with the racial categories usually offered. Reporting in the ''Other Race'' category by Hispanics occurs because, as noted earlier, some Hispanics do not identify with the major race groups. For this reason these members of the Hispanic population report in the ''Other Race'' category and many register their Hispanic origin in the ''Other Race'' write-in line when available. (For example, see Kissam et al., 1993). In the 1996 National Content Survey, between 25 percent and 43 percent of Hispanics reported in the ''Other Race'' category depending on whether the Hispanics origin question was placed before or after the race question (Harrison *et al.,* 1996).

4.5.2 Item Nonresponse in the Race Question

Relatively high item nonresponse to the race question among Hispanics is another reporting issue associated with the use of a separate question to collect information on Hispanic origin and race. The item nonresponse to the race question varies depending on the mode of data collection. In self-administered surveys such as the 1996 National Content Survey (NCS), the item nonresponse rate for the race question is much higher than in interviewer-administered surveys. For example, in the NCS, the item nonresponse rate for the race question ranged from 1.1 percent to 2.2 percent for non-Hispanics, and from 31 percent to 36.5 percent for Hispanics. (Harrison *et al.,* 1996). In interviewer-administer surveys, item nonresponse to the race question is much lower. For example, item nonresponse for the race question in the 1994 National Health Interview Survey was 0.4 percent, and on the Current Population Survey, less than one tenth of one percent of Hispanics were missing information on race.

4.5.3 Item Nonresponse in the Hispanic Origin Question

The General Accounting Office concluded that ''the results from the 1990 census showed that the Hispanic origin item continues to pose one of the more significant data quality challenges for the Bureau in terms of allocation rate'' (GAO, 1993:24). The Hispanic origin question had the highest nonresponse rate of any question of the 1980 and 1990 censuses, suggesting that some people regarded the question as not applicable, redundant, or unclear. Information was missing from 10 percent of the 1990 census short forms (McKenney, 1992). For the more detailed sample questionnaires, the allocation rate for nonresponse was 3.5 percent. Non-Hispanic respondents contributed substantially to the high nonresponse rate for the Hispanic origin item. The 1990 Content Reinterview Survey found that 94 percent of non-respondents to the Hispanic origin item were non-Hispanic.

In the Census Bureau's 1996 National Content Survey, item nonresponse to the Hispanic origin question ranged from 5.2 percent to 8.6 percent depending on whether the Hispanic origin question was placed before or after the race question (Harrison *et al.,* 1996).

Item nonresponse to the Hispanic origin item is considerably lower in interviewer administered surveys than in self-administered surveys. For example, the item nonresponse rate from the Current Population Survey for the Hispanic origin variable was 0.6 percent for the first 6 months of 1995. In the 1994 National Health Interview Survey, Hispanic origin was missing for 1.2 percent of sample persons. On the other hand, some data systems that collect information based on observer-identification have considerably higher nonresponse for the Hispanic origin data items. Examples include 15 percent for the National Hospital Ambulatory Medical Care Survey, 30 percent for the National Home and Hospice Care Survey, and 75 percent for the National Hospital Discharge Survey, all conducted by the National Center for Health Statistics. (DHHS, 1995).

4.5.4 Reporting Inconsistency

The General Accounting Office concluded that ''the Content Reinterview Survey for the 1990 Census showed generally good response consistency for both the race and Hispanic origin questions'' (GAO, 1993, p. 22). However, of those who said they were ''Other Hispanic,'' only 64 percent answered similarly in the reinterview study. In the race question, only 36 percent of those who said on the Census form that they were of ''Other Race'' reported similarly when reinterviewed. Those reporting as American Indians also were more likely to change their response. Reporting race generally was less consistent for multiple-race persons, Hispanics, foreign-born persons, and person who did not read or speak English well (OMB **Federal Register** notice, 1995: 44675).

The 1996 National Content Survey compared responses from mailback survey forms to the responses provided in the telephone reinterview (Harrison *et al.,* 1996). Approximately 3 percent Hispanics reported inconsistently on the mailback survey forms and telephone reinterview when two separate questions on race and ethnicity were used. Using a Hispanic origin question first with no multiracial category, 2.9 percent of Hispanics reported inconsistently. Inconsistency was not reduced for Hispanics when the order of the questions on race and Hispanic origin was changed (2.9 percent). Among Hispanics, inconsistency was highest (3.8 percent) when Hispanic origin was asked first and the race question included a multiracial category. Use of a multiracial category in the 1996 National Content Survey did not have a statistically significant effect on the consistency with which persons reported Hispanic origin (Harrison *et al.,* 1996).

Information on reporting consistency is also available from other surveys. For example, Hahn, Truman and Barker (1996) found that 58 percent of respondents to the first National Health and Nutrition Examination Survey and subsequent Epidemiologic Follow-up Study were consistent in self-classification over the follow-up period. In another study Johnson *et al.* (1995:15) found that 40 percent of mixed-race and Hispanic respondents changed the way they reported their racial and ethnic background depending on the context, social situation, options on application forms or ''perceived advantages in applying for scholarships, loans, school admissions, housing and employment.'' Changes in self-awareness and identification were also responsible for changes in reported identity. Hispanics with two Hispanic parents were much less likely (12.5 percent) to have ever identified themselves differently.

4.6 Measures to Correct Misreporting in the Race Question and the Hispanic Origin Question

The reporting issues just described—reporting in the ''Other race'' category, item nonresponse to the race question, item nonresponse to the Hispanic origin question, and inconsistency of reporting—result from having a separate race and a separate Hispanic origin question. Two important measures have been used and tested to address these reporting concerns while keeping two separate questions: placement of the Hispanic origin question before the race question, and providing respondents with written instructions to respond to both the race question and the Hispanic origin question.

Bates, de la Puente, Martin and DeMaio (1994) analyzed and summarized multiple replications of five major Census Bureau studies on decennial census race and Hispanic origin questions to determine the effects of question order and instructions on reporting in the race question and the Hispanic origin question.[6] Based on this analysis and on qualitative information obtained through focus groups and in-depth personal interviews, the authors conclude that the evidence consistently shows that placement of the Hispanic origin question before the race question provides a more restrictive frame of reference for race reporting and thus respondents (mostly Hispanics) are less likely to report in the ''Other Race'' category and more likely to select one of the major race groups listed in the race question. Further, restricting the frame of reference for race reporting also results in reductions in item nonresponse to the race question. Although these measures substantially reduced reporting in the ''Other Race'' category, reduced item nonresponse for the race question among Hispanics, and reduced item nonresponse to the Hispanic origin questions by non-Hispanics, these measures did not entirely eliminate the reporting problems.

For example, in the National Content Survey, ''Other Race'' reporting by Hispanics went from 40 percent when the race question was placed before the Hispanic origin question down to 20 percent when the Hispanic origin question was placed before the race question. The comparable percentages in the Appeals and Long Form Experiment were 53 percent when the race question was placed before the Hispanic origin question and 26 percent when the Hispanic origin was placed before the race question. The declines in ''Other Race'' reporting by Hispanics in the other three Census Bureau studies were more modest. (Bates *et al.*, 1994).

Bates, de la Puente, Martin, and DeMaio (1994) report that the inclusion of instructions to aid reporting had positive effects. For example, the Alternative Questionnaire Experiment (AQE) used a two-question format to gather data on race and Hispanic origin, and included an instruction in some panels that read ''Fill in the NO circle if not Spanish/Hispanic'' next to the question text on Hispanic origin. Results from the AQE demonstrate that adding this instruction alone reduced nonresponse to the Hispanic origin question from 19 percent to 8 percent. Combining the instruction with asking the ethnicity question prior to race resulted in a nonresponse rate of 5 percent. These findings suggest that instructions can help reduce, but not eliminate, nonresponse to the Hispanic origin question.

Bates, de la Puente, Martin and DeMaio (1994) also conducted multivariate analyses to improve understanding of the effects of question order and instructions on race reporting by Hispanics. Four variables hypothesized to affect race reporting by Hispanics were included in the analyses: Place of birth (native or foreign-born), recency of arrival in the United States, educational level, and English proficiency. The results from the multivariate analyses are mixed. The authors concluded that the effect of question ordering on the reporting of race among Hispanics does not seem to be influenced by time in the United States, education, or knowledge of English. The authors added that data at least two of the five Census Bureau studies considered indicated that Hispanic response to the race question may be conditioned by recency of arrival in the United States (Bates *et al.*, 1994).

Unlike the Census Bureau tests examined in the Bates, de la Puente, Martin and DeMaio (1994) study, the 1996 National Content Survey also examined the effects of sequencing on the reporting of race and Hispanic origin using race questions that provided a ''multiracial'' category as one of the response options. Findings from this test are in line with the results reported by Bates *et al.* (1994).

In the 1996 National Content Survey panels where the race question did not include a multiracial category as a response option, ''Other Race'' reporting by Hispanics significantly declined from about 43 percent when the Hispanic origin question was placed after the race question to approximately 25 percent when the Hispanic origin question was placed before the race question. ''Other Race'' reporting also declined among Hispanics when the Hispanic origin question was placed before the race question that included a multiracial category as a response option, but the decline was not statistically significant. In panels where the race question included a multiracial response option, reporting of ''Other Race'' by Hispanics declined from about 33 percent when the Hispanic origin question was placed after the race question to about 25 percent when the Hispanic origin question was placed before the race question (Harrison *et al.*, 1996). It is important to note that these declines in ''other race'' reporting were reduced, but not eliminated, by reversing the order of the Hispanic origin and race questions.

Placing the Hispanic origin question before the race question in the 1996 National Content Survey reduced item

[6] The authors analyzed data from the following Census Bureau questionnaire design experiments: ''Classroom'' tests (a series of 30 group sessions with split-panel experiments), the National Census Test (a nationally representative mailout/mailback test conducted during 1988), the Alternative Questionnaire Experiment (a split-ballot experiment conducted in urban areas during the 1990 census), the Simplified Questionnaire Test (a national test conducted in 1992 designed to assess whether response rates can be improved by using more ''respondent friendly'' census forms), and the Appeals and Long Form Experiment (a national test conducted in 1993 intended to test two revised census ''long'' forms). In addition to these experiments, the authors also examined qualitative information on race and Hispanic origin reporting obtained through focus groups and in-depth personal interviews. For more information, see Bates, de la Puente, Martin and DeMaio (1994) and Bates, Martin, DeMaio and de la Puente (1996).

nonresponse rates for the race question among Hispanics, but these reductions were not statistically significant and item nonresponse rates for the race question remained relatively high (Harrison *et al.*, 1996).

The sequencing of the Hispanic origin question and the race question was also one of the major research objectives of the Race and Ethnic Targeted Test (RAETT). The findings from the RAETT on this issue echo those of studies just discussed. In the Hispanic targeted sample, asking the Hispanic origin question before the race question reduced item nonresponse to the Hispanic origin question from about 10 percent to about 7 percent. Placing the Hispanic origin question before the race question had no effect on the item nonresponse rate for the race question in the Hispanic targeted sample.

In the RAETT, reductions in the reporting as ''Other Race'' and ''Multiracial'' and an increase in the reporting as ''White'' in the Hispanic targeted sample were detected when the Hispanic origin question was asked before the race question. More specifically, in the Hispanic targeted sample in Panel D (race question first), about 56 percent of respondents reported as White, about 25 percent reported as ''Other Race'', and about 3 percent reported as ''Multiracial.'' In contrast, when the Hispanic origin question was placed before the race question (Panel B), approximately 67 percent reported as White, 16 percent reported as ''Other Race'', and 2 percent reported as ''Multiracial.''

4.7 The Effects of Combining the Race Question and the Hispanic Origin Question into a Single Question

A combined question on race and Hispanic origin was tested in the 1995 CPS Supplement and in the RAETT.

4.7.1 Results From the May 1995 CPS Supplement on Race and Ethnic Origin

Having a separate versus combined race and ethnicity question appears to have a significant effect on the percentage of persons who identify as Hispanic. In the May 1995 Current Population Survey (CPS) Supplement, significantly more people identified as Hispanic when they were asked a separate question on Hispanic origin than when Hispanic origin was combined with the race question (See Table 4.1). (Because an interviewer collects the data, either in person or by telephone, multiple responses are much less likely to occur.) In particular, 10.6 percent of the respondents who received a separate question (panels 1 and 2 combined from Table 4.1) identified as Hispanic compared with 8.1 percent of the respondents who were given the combined race and ethnic origin question (panels 3 and 4 combined from Table 4.1), (Tucker *et al.*, 1996).

BILLING CODE 3110–01–M

Table 4.1. Hispanic or non-Hispanic origin identification by panel, May 1995 CPS Supplement

(Percent distribution)

	Panel			
	1	2	3	4
	Separate race and Hispanic-origin questions; no multiracial category	Separate race and Hispanic-origin questions with a multiracial category	A combined race and Hispanic-origin question; no multiracial category	A combined race and Hispanic-origin question with a multiracial category
Hispanic	10.79	10.41	7.53	8.58
Non-Hispanic	89.21	89.59	92.47	91.42
Total	100.00	100.00	100.00	100.00

Note: Detail may not add to totals due to rounding. From Table 3, Tucker, et al. (1996).

BILLING CODE 3110–01–C

Additionally, it is important to note that some specific Hispanic subgroups may respond differently than others to separate race and ethnicity questions versus a combined race and ethnicity question (See Table 4.2). In particular, the proportions of respondents who report Mexican, Cuban, and ''Other Hispanic'' national origins differed significantly depending on the type of race and ethnicity question. Specifically, the respondents who identify as Hispanic in a combined race and ethnicity question (as in panels 3 and 4 combined from Table 4.2) are composed of a greater percentage of people with Mexican national origin (66 percent) than the respondents who identify as Hispanic in a separate ethnicity question (about 60 percent in panels 1 and 2 combined from Table 4.2). In contrast, the respondents who identify as Hispanic in a separate question are composed of a greater percentage of people with Cuban and ''Other Hispanic'' national origins (about 4 percent Cuban and 13 percent ''Other Hispanic'' in panels 1 and 2 combined from Table 4.2) than the respondents who identified as Hispanic from the combined race and ethnicity question (about 2 percent Cuban and 9 percent ''Other Hispanic'' in panels 3 and 4 combined from Table 4.2). In other words, Hispanics of different national origins differ in how likely they are to identify themselves as Hispanic depending upon whether they are asked a separate Hispanic question or a combined race and Hispanic origin question (Tucker *et al.*, 1996).

BILLING CODE 3110–01–M

Table 4.2. Hispanic national origin by panel, May 1995 CPS Supplement (Percent Distribution)

	Panel			
	1	2	3	4
Hispanic National Origin	Separate race and Hispanic-origin questions; no multiracial category	Separate race and Hispanic-origin questions with a multiracial category	A combined race and Hispanic-origin question; no multiracial category	A combined race and Hispanic-origin question with a multiracial category
Mexican, Mexican-American, Chicano	59.45	60.49	67.06	65.21
Puerto Rican	9.66	9.33	10.04	10.46
Cuban	4.69	4.12	1.96	2.40
Central American, South American	13.00	10.61	11.93	11.78
Other Hispanic, Latino, or Spanish	11.82	13.89	8.73	9.58
Not really Hispanic, Latino, Spanish	0.85	1.29	0.20	0.42
Don't know / Not ascertained	0.54	0.28	0.07	0.15
Total	100.00	100.00	100.00	100.00

Note: Detail may not add to totals due to rounding. From Table 11, Tucker, et al. (1996).

BILLING CODE 3110–01–C

In the May 1995 CPS supplement, analyses of the effect of a separate versus combined race and ethnicity question showed that there were no significant differences in the percentage of people identifying as Black, Asian or Pacific Islander, or American Indian (See Table 4.3). However, the number of American Indians in the sample was too small for drawing reliable conclusions for that population. The percentage of people identifying as White was influenced by whether there was a separate Hispanic question or not, with 75.22 percent (panels 3 and 4 combined from Table 4.3) of the respondents identifying as White when Hispanic was included in the list of races compared with 79.81 percent who identified as White when Hispanic origin was a separate question (panels 1 and 2 combined from Table 4.3). Thus, including Hispanic as a category in the race question will likely lower the proportion of people currently identifying as White only and the proportion of persons classified as ''Other.'' These findings were also reflected in the analysis of the differences in respondent reporting between the CPS race question and the May 1995 CPS Supplement race questions (see Tucker *et al.*, 1996).

BILLING CODE 3110–01–M

Table 4.3. Racial Identification by panel, May 1995 CPS Supplement (Percent distribution)

	Panel			
	1	2	3	4
	Separate race and Hispanic-origin questions; no multiracial category	Separate race and Hispanic-origin questions with a multiracial category	A combined race and Hispanic-origin question; no multiracial category	A combined race and Hispanic-origin question with a multiracial category
White	79.88	79.74	75.78	74.66
Black	10.29	10.66	10.60	10.27
Hispanic	-	-	7.53	8.20
American Indian	0.97	0.73	1.06	0.79
Asian or Pacific Islander	3.83	3.25	3.25	3.30
Multiracial	-	1.65	-	1.55
All Other	5.03	3.97	1.78	1.23
Total	100.00	100.00	100.00	100.00

Note: Adapted From Table 5, Tucker et al., (1996).

BILLING CODE 3110–01–C

By using respondents' Hispanic national origin from the CPS and examining their racial identification in the May 1995 CPS Supplement, further insights are gained into how subgroups of Hispanics identify depending upon whether they are asked separate race and ethnicity questions or a combined race and ethnicity question (See Table 4.4). As can be seen in Table 4.4, a sizable percentage of respondents with Hispanic national origins do not identify as Hispanic in a combined race and ethnicity question (panels 3 and 4). Specifically, 11 percent of respondents with a Mexican national origin identified as White when having a to choose between White and Hispanic in the combined race and ethnicity question. Similarly, 23 percent of respondents with other Hispanic national origins identified as White when there was a combined race and ethnicity question and a majority of respondents of Cuban origin identified as White even though the Hispanic category was offered in the combined question (Tucker *et al.*, 1996). This pattern of racial identification for Mexican-origin and Cuban-origin respondents is consistent with the findings of the 1990 Panel Study of Income Dynamics conducted by the Institute for Survey Research at the University of Michigan. For Hispanics reporting a single race when given a list of racial categories that included ''Latino,'' 88 percent of Cubans reported as White and 9 percent as Latino, compared with Mexicans, 56 percent of whom reported as White and 35 percent of whom reported as Latino (Duncan *et al.*, 1992). Bates, *et al.* (1996) found that Cubans, compared with other Hispanic groups, were most likely to report their race as White when the race question followed a question on Hispanic origin.

BILLING CODE 3110–01–M

Table 4.4. Racial identification in the Supplement by Hispanics with different national origins from the initial CPS interview by panel, May 1995 CPS Supplement (Percent Distribution) from Table 18 in Tucker et al., 1996.

Panel 1 Separate race and Hispanic-origin questions; no multiracial category

	Mexican-American, Chicano, Mexican	Puerto Rican	Cuban	Central or South American
White	64.67	61.21	93.30	42.91
Black	0.00	3.86	0.83	3.95
American Indian, Eskimo, Aleut	1.77	1.02	0.00	4.70
Asian or Pacific Islander	0.35	0.94	0.00	1.93
All Other	33.20	32.97	5.87	46.51
Total	100.00	100.00	100.00	100.00

Panel 2 Separate race and Hispanic-origin questions with a multiracial category

	Mexican-American, Chicano, Mexican	Puerto Rican	Cuban	Central or South American
White	61.83	56.45	95.00	63.97
Black	0.00	3.60	0.00	3.85
American Indian, Eskimo, Aleut	1.30	0.00	0.00	2.05
Asian or Pacific Islander	0.15	0.41	0.00	1.20
Multiracial	2.98	7.00	1.17	3.03
All Other	33.75	32.54	3.83	25.91
Total	100.00	100.00	100.00	100.00

Panel 3 Combined race and Hispanic-origin question; no multiracial category

	Mexican-American, Chicano, Mexican	Puerto Rican	Cuban	Central or South American
White	10.85	21.62	57.95	19.20
Black	0.26	1.90	0.00	1.99
Hispanic	85.15	71.51	39.92	77.67
American Indian, Eskimo, Aleut	0.47	0.00	0.00	0.43
Asian or Pacific Islander	0.03	0.00	0.00	0.00
All Other	3.24	4.97	2.13	0.71
Total	100.00	100.00	100.00	100.00

Panel 4 Combined race and Hispanic-origin question with a multiracial category

	Mexican - American, Chicano, Mexican	Puerto Rican	Cuban	Central or South American
White	11.16	17.04	49.90	14.08
Black	0.06	1.35	2.23	4.09
Hispanic	84.04	77.30	46.40	75.42
American Indian, Eskimo, Aleut	0.02	0.00	0.00	0.41
Asian or Pacific Islander	0.05	0.00	0.00	0.56
Multiracial	1.96	2.50	1.46	1.05
All Other	2.71	1.80	0.00	4.38
Total	100.00	100.00	100.00	100.00

BILLING CODE 3110–01–C

4.7.2 Results From the Race and Ethnic Targeted Test

Two versions of a combined race, Hispanic origin, and ancestry question were tested in RAETT. Both versions provided check boxes for ''White,'' for ''Black, African Am., or Negro,'' for ''Indian (Amer.) or Alaska Native'' (with a write-in line for tribal affiliation), for ''Asian or Pacific Islander,'' for ''Hispanic'' and for ''Some other race.'' One version (Panel E) also included the category ''Multiracial or biracial.'' A second version (Panel F) did not contain a multiracial category but rather instructed respondents to ''Mark one or more boxes to indicate what this person considers himself/herself to be.'' Both versions, E and F, were followed by a question which asked respondents to write in their ''ancestry or ethnic group'' in the space provided.

Panels E and F were compared with the corresponding panels that contained a separate race question and a separate Hispanic Origin question. These were Panel B (containing a multiracial category like Panel E) and Panel C (containing a multiple response option like Panel F). The major findings from these panel comparisons are presented below.

4.7.2.1 Reporting of Hispanic Origin

A combined race and Hispanic origin question must, of necessity, produce fewer Hispanic only responses or fewer responses in at least one of the major race groups, than a separate race question and a separate Hispanic origin question. If all individuals who select the Hispanic category alone or in combination with another race group are tabulated as Hispanic (termed ''all-inclusive Hispanic''), such a tabulation could provide similar information to that which would be obtained if separate questions on race and Hispanic origin were used.

The RAETT found no statistically significant differences between the ''all-inclusive Hispanic'' tabulation for the combined question on panels E and F and the appropriate panels containing a separate Hispanic origin question and a separate race question. Specifically, panels B and E, which both contained a multiracial category, and panels C and F, which both contained the instruction to ''mark one or more,'' all had responses ranging from 74 percent to 76 percent. However, if one were to tabulate as Hispanic those who selected only the Hispanic category, then a much lower percent (about 57 percent) of responses would be Hispanic in panels E and F.

Table 4.5 shows that the percentages reporting the specific Hispanic origins Mexican, Puerto Rican, Cuban and Other were quite different on panels E and F than on panels, A, B, and C. This is most likely an artifact of the way the data were collected and tabulated. In panels, A, B, and C, respondents were asked to check boxes with the labels shown in Table 4.5. In panels E and F, respondents were asked in a separate question to write in their ancestry or ethnic group. These write-in groups were tabulated (for those who marked only the Hispanic category) and are shown in table 4.5. Those who consider themselves both Hispanic and something else are not included in counts shown for the specific Hispanic origins for panels E and F; they are included only in ''Hispanic (only or in combination).'' In addition, if Hispanic only respondents wrote in two different Hispanic origins they are counted in ''other Hispanic'' in Panels E and F. In panels, A, B, and C, the instructions appeared to ask Hispanic respondents to select one Hispanic origin category, although some may have marked multiple categories. A tabulation using the ''historic series'' approach or the ''all-inclusive'' approach would shed additional light on this issue.

BILLING CODE 3110–01–M

Table 4.5 Reporting on the Hispanic-Origin Question in the Hispanic Targeted Sample for Selected Panels

Hispanic origin	Panels				
	Panel A Separate questions	Panel B Separate questions	Panel C Separate questions	Panel E Combined question	Panel F Combined question
Hispanic (Only or in combination)	76.5	75.6	74.1	74.1	75.1
Hispanic Only	76.5	75.6	74.1	57.5	56.4
Mexican	21.8	26.5	22.5	20.9	19.4
Puerto Rican	31.0	26.8	28.4	8.5	8.9
Cuban	17.8	17.3	17.4	7.0	5.5
Other	6.0	5.1	5.8	21.1	22.6

Note: Adapted From Table 1-9 in Bureau of the Census (1997)

BILLING CODE 3110–01–C

4.7.2.2 Reporting of Multiple Races

The combined race, Hispanic origin, and ancestry question (Panels E and F) elicited relatively high percentages of multiple responses in the Hispanic targeted sample. Table 4.6 shows that in Panel E, where a multiracial category was provided and respondents were instructed to mark one box, 18 percent of respondents in the Hispanic targeted sample selected more than one category. In Panel F, where there was no multiracial category and respondents were instructed to ''Mark one or more boxes'' 19 percent of respondents of the Hispanic targeted sample selected more than one category.

The relatively high rates of multiple responses in the Hispanic targeted sample on Panel E suggests that substantial percentages of Hispanics wish to report a race as well as their Hispanic origin, and will check more than one category even when they encounter a question that instructs them to choose one or the other. Additional support for this conclusion can be found in the fact that more than 92 percent of multiple responses in Panels E and F in the Hispanic targeted sample marked the Hispanic box or provided Hispanic write-in entries.

BILLING CODE 3110–01–M

Table 4.6. Percent Reporting More Than One Race in the Race Question by Panel and Targeted Sample

(Includes multiple responses and a multiracial category)

Targeted sample	Panel B	Panel C	Panel E	Panel F
White ethnic	1.2	1.4	2.1	1.7
Black	1.3	1.8	2.7	2.1
Hispanic	3.5	3.6	18.0	19.4
American Indian	4.5	4.2	5.2	7.2
Asian and Pacific Islander	10.6	10.0	7.5	6.8
Alaska Native	13.4	(NA)	(NA)	(NA)

(NA) Not available. Note: Adapted From Tables 1-1R, 1-2R, 1-3R, 1-4R, 1-5R, 2-1R, 2-2R, 2-3R, 2-4R, 2-5R, 8-1R, 8-2R, 8-3R, 8-4R, 8-5R in Bureau of the Census (1997)

BILLING CODE 3110–01–C

4.7.2.3 Summary of Findings

Inherently, a combined race and Hispanic origin question will result in lower reporting in the Hispanic origin category alone, or in one of the major race groups alone than separate race and Hispanic origin questions where race and Hispanic origin are independent. The RAETT found patterns of declines in reporting as Hispanic alone, as White alone, and as Asian and Pacific Islander alone in the combined questions. This suggests that there are respondents who will report as Hispanic *and* as White or as Asian and Pacific Islander when they encounter separate questions on race and Hispanic origin. However, when faced with a combined question, some of these respondents will report as Hispanic, some will report as White or as Asian and Pacific Islander, and some will mark more than one of these categories, even when the option of doing so is not offered. In contrast, the absence of significant changes in reporting as Black or as American Indian in the respective RAETT targeted samples for those populations suggests that the numbers of respondents in the Black and American Indian targeted samples who report as Hispanic when separate Hispanic origin and race questions are offered are relatively small or that they are more likely to report their race rather than their Hispanic origin in a combined question.

When Hispanic is offered as an option in the combined question, a number of Hispanic respondents will select both Hispanic and a race, even when instructed not to do so.

4.8 Public Sentiment

The Hispanic origin ethnicity category was included in Directive No. 15 to meet the requirements of Pub. L. 94–311, which called for improving data on persons of Spanish culture or origin. During discussions of the content of the 1990 Census, the Interagency Working Group on Race and Ethnicity concluded that a combined race and Hispanic origin question would not meet program needs and could result in an undercount of the Hispanic origin population (Bureau of the Census, 1988).

During 1994, several national Hispanic organizations supported the incorporation of the term ''Hispanic'' into a combined ''Race/Ethnicity'' question (Kamasaki, 1994; Olguin, 1994; Blackburn-Moreno, 1994). Both the National Council of La Raza (NCLR) and ASPIRA Assoc. Inc. argued that additional research should be conducted before any change is made. The Mexican American Legal Defense and Education Fund (MALDEF) saw the lack of a uniform definition of Hispanic throughout the Federal Government and differential undercounts of Hispanics as more important problems (Carbo, 1994). A few public comment letters sent in response to OMB's August 28, 1995, **Federal Register** notice showed some support for Hispanic as a racial category, but none of these letters of support were from an Hispanic surnamed individual or Hispanic organization.

In a book chapter published in January 1997, the NCLR president, Raul Yzaguirre stated that he does not support the inclusion of Hispanic origin

as a racial category, but does support further testing of both the Hispanic origin and race questions. He also added that: ''Before large-scale changes are made, however, it is critical that the Census Bureau and the Office of Management and Budget determine which version of the questions accommodates the largest number of respondents and provides the most accurate data.'' (Yzaguirre 1997: 89).

The majority of Hispanics in the May 1995 CPS Supplement preferred the combined question. It has been argued that they did not know the impact of combining the questions on the population count of Hispanics (Torres, 1996:4). This concern appears to be based on the comparison of the percent reporting Hispanic using the separate question format with the percent reporting Hispanic *only* using the combined question with a multiple response option. As described in Section 4.7.2.1, approximately the same percent report as Hispanic when data are tabulated in the all inclusive Hispanic category (the total of those who mark Hispanic either alone or in combination with other categories) in the combined format as report ''Hispanic'' in a separate question format.

A concern expressed by some is that the use of the combined format may affect aggregate statistics about the Hispanic population since Cubans tend to have higher socioeconomic and health status than other Hispanics. Two examples were therefore calculated. When the results from the May 1995 CPS Supplement are applied to 1994 data on unemployment by Hispanic subgroup, it is estimated that the 1994 unemployment rate for Hispanics would have changed relatively little—from 10.9 percent to 11.2 percent if the combined format (and Hispanic alone category) had been used. The percent of Hispanics with a regular source of primary health care in 1991 did not change in these calculations (61.8 percent using separate questions and 61.4 percent using the combined format).

4.9 Additional Cost Concerns

If OMB were to change the choice Federal agencies currently have to collect Hispanic origin data using either the combined format or two separate questions, there would be a sizable number of large data systems for which data collection forms, computer programs, interviewers' and coders' manuals, and other related materials would have to be changed. For example, both the separate and combined formats are used within the Department of Health and Human Services, (DHHS, 1995). Fifty-eight percent (56 out of 97) of the DHHS data systems listed in the Directory which do collect Hispanic origin data use the separate format.

The Indian Health Service (IHS) in the Department of Health and Human Services prefers that ''Hispanic'' be retained as a separate ethnic category. Many American Indians and Alaska Natives are of Hispanic origin and have Spanish surnames, especially in the West and Southwest. They state that if ''Hispanic'' were to be considered as a racial category (even if there were a ''mark all that apply'' approach built in), it is probable that the identity of many American Indians and Alaska Natives would be masked by responses to the Hispanic category. If ''Hispanic'' is retained as an ethnic category, however, Indians will still be able to identify with both backgrounds. Based on findings from the 1990 Census and the May 1995 Current Population Survey supplement, IHS expects that although the reductions in reporting as American Indian, strictly from an alternative that would include Hispanic as a racial category, would be less than from the adoption of a stand-alone multiracial category (or a multiracial category with a follow-up question); the reduction would, nonetheless, be serious.

The Health Care Financing Administration (HCFA) uses the combined format to collect information on race and Hispanic origin for Medicare beneficiaries. If the decision were made to use only two separate questions to collect data on race and ethnicity, HCFA would have to perform a 100% survey of Medicare beneficiaries. To revise HCFA's race/ethnicity categories for future beneficiaries, HCFA would have to negotiate payment to the Social Security Administration to collect this information on Social Security beneficiaries at enrollment. The cost of changing HCFA's data systems to accept new codes if a combined format were to be used would be minimal.

Similarly, the Equal Employment Opportunity Commission (EEOC) currently uses only the combined question format to collect data on race and ethnicity. The instruction booklets for completing all EEOC employment reports have a section on race/ethnic identification which provides guidance on conducting visual surveys and maintaining postemployment records as to the race/ethnic identity of employees. Thus, the costs associated with a requirement to use only the two question format would extend beyond simple computer programming, and the expenses would be greater than the minimal costs that some states have recently encountered when implementing state legislative requirements for a multiracial category.

Chapter 5. Other Possible Changes

5.1 Background

This chapter considers suggestions for changes in how data on certain population groups should the classified and for other improvements or clarifications. The issues discussed cover four areas: establishment of new categories for specific population groups, terminology, format, and instructions. The chapter's sections correspond to specific racial and ethnic categories, and all of the issues related to that category or subcategory are discussed together.

It should be noted that while Directive No. 15 uses the term ''Alaskan Native,'' the term used in Federal law and generally preferred is ''Alaska Native.'' For this reason the term appears as ''Alaska Native'' throughout those sections dealing with this group except where the reference is specifically to the category in Directive No. 15.

5.2 Specific Suggestions

In addition to the proposals discussed in Chapters 3 and 4, the following fifteen suggestions for changes were examined during the current review of Directive No. 15:

Changes related to American Indians and Alaska Natives

- Should the term ''American Indian'' or ''Native American'' be used?
- Should the term ''Alaska Native'' or ''Eskimo and Aleut'' be used?
- Should a distinction be made between federally recognized and nonfederally recognized tribes?
- What is the best way to elicit tribal affiliation?
- Should the definition be changed to include Indians indigenous to Central America and South America?

Changes related to Asians and Pacific Islanders

- Should the ''Asian or Pacific Islander'' category be split into two categories? If yes, how should this be done?
- Should specific groups be listed under the ''Asian or Pacific Islander'' category?
- Should the term ''Guamanian'' or ''Chamorro'' be used?

Changes related to Hawaiians

- Should the term ''Native Hawaiian'' or ''Hawaiian'' be used?

• Should Hawaiians continue to be included in the ''Asian or Pacific Islander'' category; be reclassified and included in an ''American Indian or Alaska Native'' category; or be established as a separate, new category?

Other terminology issues

• Should the term ''Black'' or ''African American'' be used?
• Should the term ''Hispanic'' of ''Latino'' be used?
• Should more that one term be used in either case?

Other New Category Issues

• Should an Arab or Middle Eastern category be created? If yes, how should it be defined?
• Should a Cape Verdean category be created?

5.3 Evaluation of the Possible Effects of Suggested Changes

5.3.1 Changes Related to American Indians and Alaska Natives

The following suggested changes to Directive No. 15 as they relate to American Indians and Alaska Natives are discussed in this section:

• Should the term ''American Indian'' or ''Native American'' be used?
• Should the term ''Alaska Native'' or ''Eskimo and Aleut'' be used?
• Should a distinction be made between federally recognized and nonfederally recognized tribes?
• What is the best way to elicit tribal affiliation?
• Should the definition be changed to include Indians indigenous to Central America and South America?

Currently, the ''American Indian or Alaskan Native'' category is used to classify data on ''a person having origins in any of the original peoples of North America, and who maintains cultural identification through tribal affiliation or community recognition.''

5.3.1.1 Should the Term ''American Indian'' or ''Native American'' be Used?

''American Indian'' is the term used in Directive No. 15 to identify the descendants of the indigenous population of North America. The term has generally been used over the past several decades to identify this population group and is recognized by members of this group. In general usage, the term ''American Indian'' includes individuals who are members of tribes that may or may not be recognized by the Federal Government. Federally recognized tribal governments include only members of their tribe and may use their own Indian name for their tribal name. Further, while Federally recognized tribal governments have their own criteria to determine tribal membership, such membership is not required by Directive No. 15. As a result, the number of individuals enumerated in this category exceeds the number of individuals who hold official membership in recognized tribal governments. Most Federal programs do not require membership in federally recognized tribes for program eligibility. For example, to be eligible for Indian Health Service (IHS) programs, a person need only prove descent from a member of a federally recognized tribe; blood quantum and membership are not relevant. It has also been the practice to classify Canadian Indians in this category.

The term ''Native American'' has been in use since the 1960s. There are other indigenous groups besides American Indians and Alaska Natives (e.g., Hawaiians) in the United States and areas under U.S. Government jurisdiction. Technically, ''Native American'' is a term that does not apply exclusively to American Indians and Alaska Natives. Its use may also lead to some confusion in that individuals who are not descended from indigenous populations but who were born in the United States may consider themselves to be ''Native Americans'' and may select this category erroneously. The May 1995 CPS Supplement on Race and Ethnicity found that more than half of those identifying as American Indian or one of the Alaska Native groups preferred ''American Indian'' or ''Alaska Native'' but a third chose ''Native American.'' (Tucker *et al.*, 1996) Public comments from tribal governments to OMB indicated a clear preference for the term ''American Indian.''

In the RAETT's American Indian targeted sample, American Indians continued to write in a tribal affiliation across all panels, A through H, that used the combined category ''Indian (Amer.) or Alaska Native'' with the instruction, ''Print name of enrolled or principal tribe.'' On Panels B through H, some respondents used write-in entries such as ''Amer. Indian,'' ''American Indian,'' ''American Ind.,'' and ''Indian Amer.'' to indicate that they are American Indian rather than Alaska Native, but did not provide a specific tribal entry. The percentage ranged from 6.5 percent on Panel H to less than 1 percent on Panel A. There also were write-ins, such as ''Amer-Indian-Navajo,'' in which respondents indicated first that they are American Indian, before writing in the tribal affiliation.

In the RAETT, which drew its American Indian targeted sample from areas in close proximity to reservations, reinterviews were conducted with respondents in households with at least one person who identified as American Indian. This group indicated they preferred the term Native American (52 percent) to American Indian (25 percent). The remaining respondents indicated they had no preference (16 percent), preferred both terms (6 percent), or preferred another term (2 percent).

Measurement. Measurement issues—discussed for each of the options presented in this chapter—relate to self-identification, quality and consistency of data, and implementation.

The use of self-identification allows more people to identify as American Indian than are members of tribes. This includes people who are or who have ancestral ties to American Indians but do not meet tribal enrollment requirements. The term ''Native American'' attracts persons who were born in the United States as well as persons with American Indian and/or Alaska Native ancestry.

To improve reporting of American Indian tribes in the decennial census, the instruction ''Print name of enrolled or principal tribe'' was tested and then included in the 1990 census race question. The instruction helped to reduce the rate of nonreporting of tribe from about 20 percent in 1980 to 13 percent in 1990. This improvement occurred in reservation areas but not in off-reservation areas. (1990 CPH–L–99, ''American Indian Population by Tribe, for the United States, Regions, Divisions, and States: 1990'' and unpublished tables)

The use of self-identification rather than observation by an enumerator provides more complete data on American Indians but with limitations. The consistency of reporting as American Indian is low among persons with both American Indian and White ancestry. In decennial census data collection and tabulation there has been no distinction between federally recognized tribes and nonfederally recognized tribes. The federally recognized tribal governments, as well as the Department of the Interior's Bureau of Indian Affairs, would like the American Indian and Alaska Native definition limited to enrolled tribal members of federally recognized tribes. The Indian Health Service favors a distinction between federally recognized tribes and nonfederally recognized tribes. IHS is only responsible for federally recognized tribes; however, a separate count for nonfederally recognized tribes indicates the potential IHS service population if the tribes were to receive Federal recognition.

Some have suggested using a follow-up question to ask if a person is enrolled in the tribe reported in the race question. An enrollment question has not been included in the decennial census because there are no statutory requirements for tribal enrollment data and because of space constraints on the census questionnaire. Also, tribal governments that responded to the Bureau of the Census Survey of Census Needs of Non-Federal Data Users did not indicate that they needed tribal enrollment data.

The 1980 Census Supplementary Questionnaire for American Indians (Reservations and the Historic Areas of Oklahoma) asked a follow-up question on whether the person was enrolled in the tribe reported. There were a total of 336,280 American Indians on all reservations and 113,280 American Indians in the historic areas of Oklahoma (excluding urbanized areas) reported. For those on reservations, 87 percent were enrolled and 7 percent did not answer the question, For the historic areas of Oklahoma (excluding urbanized areas), 51 percent were enrolled and 11 percent did not answer. To determine whether a tribal enrollment question should be asked in the future, more extensive research will be needed on how to improve the reporting of such enrollment, particularly given the relatively high nonresponse rates in the past.

Data production. Data production issues—discussed for each of the options presented in this chapter—relate to coding, editing, and adjustment needs.

A change in the name of the American Indian category would not change the way American Indians are tabulated and would raise no data production issues. However, the introduction of the term ''Native American'' could be misinterpreted as meaning ''anyone born in the United States,'' with the result that some respondents would be misclassified. While the instruction asking for ''enrolled or principal tribe'' might indicate the focus of the category, it might also lead to a large number of write-in answers that would need to be coded.

Analytic. Analytic issues—discussed for each of the options presented in this chapter—relate to comparability over time and aggregation.

On the face of it, a change in the name of a group should not lead to a change in results if the definition of that group is not changed. To the extent that native-born individuals mistakenly check this category and are not identified in the coding or editing procedures, however, it is possible that using the term ''Native American'' would result in data that are not compatible with historical series.

Cost. While there are no direct costs associated with a change in name, there are important, if unmeasurable, indirect costs related to misclassification and the cascading effect on data analysis.

Legislative or program needs. Any approach collecting accurate data for this category would meet legislative and programs needs for most Federal agencies. The exception is the Bureau of Indian Affairs, which needs data only for federally recognized tribes and their members. Most Federal agencies use special tabulations of American Indians and Alaska Natives as one group, but data are also tabulated by tribe for some users.

5.3.1.2 Should the Term ''Alaska Native'' or ''Eskimo and Aleut'' be Used?

While Directive No. 15 uses ''Alaskan Native,'' the preferred term is ''Alaska Native.'' This is reflected in Pub. L. 92–203, the Alaska Native Claims Settlement Act (ANSCA) of 1971, and subsequent legislation. The Indian Health Service, the Bureau of Indian Affairs, and the Bureau of the Census prefer and use ''Alaska Native.''

In the RAETT Alaska Native targeted sample, most Alaska Natives—83 percent on Panel B and 88 percent on Panel D—reported a specific tribe or corporation when the panel used the combined category ''Indian (Amer.) or Alaska Native'' with the instruction, ''Print name of enrolled or principal tribe.'' The ''tribe not reported'' rates on these panels were 14 percent and 12 percent, respectively. On Panels B and D, 21 percent and 15 percent of respondents, respectively, wrote in ''Alaska Native'' by itself. These respondents indicated they were Alaska Native rather than American Indian, but did not provide a specific tribal or corporation affiliation. In addition, on Panels B and D, some respondents reported ''Eskimo'' (10 percent and 15 percent, respectively) and ''Aleut'' (2 percent and 1 percent, respectively) without reporting a specific tribal or corporation affiliation.

In the RAETT reinterview for the Alaska Native targeted sample, respondents in households with at least one person who identified as Eskimo or Aleut indicated, by answering ''yes'' or ''no'' to each, that their tribal entry was an ethnic group (63 percent), a tribe (55 percent), a land corporation (55 percent), a nation (30 percent), or something else (22 percent). Respondents who said their tribal entry was something else provided examples such as ''born in Alaska, indigenous people, Eskimo group, or Eskimos, self government, and people. In reinterview households with at least one person who identified as Eskimo, 88 percent of the respondents indicated that Eskimo was an acceptable term to them. Respondents who said Eskimo was acceptable but who preferred another term to Eskimo provided examples such as Inupiat, Yupik, Alaska Native, and American Indian. In reinterview households with at least one person who identified as Aleut, all respondents indicated that Aleut was an acceptable term to them.

In Alaska, the terms Alaskan Indian, Eskimo, and Aleut were in general use before 1971. Beginning with the passage of ANCSA in 1971, the term Alaska Native came into use and has been used since. Alaska Native includes Alaskan Indians (Athabascans, Tlingits, and Haidas), Eskimos (Inupiat, Yupiks, etc.), and Aleuts (who primarily live on Kodiak Island and in the Aleutian chain) covered by ANCSA. Under ANCSA, Alaska Native does not include children who were born after 1972, but such persons do identify with the term despite the legal distinction. ANCSA established regional and village corporations that have membership requirements. It is also important to distinguish among the tribes that comprise the Alaska Native population. Alaska Native tribal governments and the State of Alaska have stated that they would find census data more useful if tribes were distinguished for Alaska Natives as they are for American Indians. These tribes are just as distinct politically, culturally, and linguistically as are the American Indian tribes in the lower 48 states.

Focus groups and cognitive interviews with Alaska Natives found that Alaska Natives are reporting in the combined category, ''American Indian or Alaska Native,'' and are reporting a tribe. Also, statements indicated that the use of the term ''Eskimo'' may be offensive to some people. If the combined category is used, the term ''Eskimo'' as a descriptor would not be used.

Measurement. As in the case of American Indians, the use of self-identification allows more people to identify as Alaska Native than are members of tribes or corporations. However, Directive No. 15 (which uses the term Alaskan Native) makes no reference to ANCSA, with the result that individuals not included in the legal definition only identify themselves as Alaska Native.

Data production. If Alaska Natives are asked to designate an enrolled or

principal tribe, there will be data tabulation and production implications for the decennial census. For example, a list of the tribes will have to be developed; a determination will have to be made about which tribes to list in tabulations; and editing and coding routines will have to be refined to correct for multiple spellings or misspellings of tribal names.

Analytic. If Alaska Natives are asked to report their tribal affiliation, it would still be possible to aggregate them into the groups (American Indian, Eskimo, and Aleut) used previously in the decennial census.

Cost. The data production needs discussed above will increase the cost of the decennial census to collect and report results by specific tribe.

Legislative or program needs. Using the term Alaska Native and asking for the enrolled or principal tribe would meet legislative and program needs for most Federal agencies. It would not meet the needs of the Bureau of Indian Affairs to differentiate, at a minimum, between tribes that are or are not recognized by the Federal Government. It also would not allow for an absolute accounting of who is a member of a recognized tribe.

5.3.1.3 Should a Distinction be Made Between Federally Recognized and Nonfederally Recognized Tribes?

In public comments to OMB, the federally recognized tribal governments would like the American Indian and Alaska Native definition limited to enrolled tribal members. In decennial census data collection and tabulation there has been no distinction between federally recognized tribes and nonfederally recognized tribes. Because self-identification is used in the decennial census, it is not possible to distinguish between those individuals who have formally registered with a specific tribe and those who only claim an ancestral tie. To meet requirements of tribes, according to the Bureau of Indian Affairs and the Indian Health Service, it is preferable that data be collected for both members and nonmembers alike, but that a distinction be made between the two groups.

Measurement. Currently, aside from the decennial census, most data collection follows Directive No. 15 and uses the ''American Indian or Alaska Native'' category or a combined American Indian, Eskimo, and Aleut category without asking for any tribal affiliation. The 1980 and 1990 decennial censuses used three separate categories—American Indian, Eskimo, and Aleut. For persons who identified as American Indian, tribal affiliation was asked. The continued use of the category ''American Indian or Alaskan Native'' does not impose an implementation problem for Federal agencies.

Data production. Aside from data collections that ask for enrolled or principal tribe, there are no data production issues. However, when tribal affiliation is asked, many coding and editing issues come into play. These issues are not new and are well known to the agencies for which tribal affiliation is an important factor.

Analytic. To the extent that data production related to coding and editing tribal affiliation identifies and reclassifies respondents who erroneously checked this racial category, no longer asking this information will inflate the number of American Indians.

Cost. There are some costs associated with coding and editing tribal affiliation.

Legislative or program needs. Using the category ''American Indian or Alaska Native'' and asking for the enrolled or principal tribe would meet legislative and program needs for most Federal agencies, except for the Bureau of Indian Affairs, which needs data on tribal members of federally recognized tribes.

5.3.1.4 What is the Best Way to Elicit Tribal Affiliation?

American Indians have been asked in most decennial censuses to report their tribal affiliation. In the 1990 census, the instruction, ''Print name of enrolled or principal tribe,'' improved reporting of tribal affiliation.

Given the relatively large number of Alaska Natives who also specify tribal affiliation and the extent of negative reaction to the term ''Eskimo,'' careful consideration needs to be given to its continued use in either the name of the category or as an example. The use of the combined category ''American Indian or Alaska Native'' and the instruction, ''Print name of enrolled or principal tribe,'' would address both points.

See section 5.3.1.2 above for a discussion of the measurement, data production, analytic, cost, and legislative or program needs issues related to this topic.

5.3.1.5 Should the Definition of the ''American Indian or Alaska Native'' Category be Changed to Include Indians Indigenous to Central America and South America?

Currently, the definition for the ''American Indian or Alaska Native'' category does not include Indians indigenous to Central America and South America. In the 1990 census, members of Central American tribes (1,688) and South American Tribes (3,133) comprised less than 0.3 percent of the total American Indian population (1,878,285). Given these small numbers, no major difficulties occur with the current classification and collection method if the category were to be expanded. Even if the census numbers include these tribes, the count would have to be much larger, at least 50,000 or more, to appear in any Federal data collection other than the decennial census. (1990 CPH–L–99, ''American Indian Population by Tribe, for the United States, Regions, Divisions, and States: 1990'')

It should be noted that in the development work that formed the basis for the current categories, some members of the FICE Ad Hoc Committee thought that the definition should refer to ''original peoples of the Western Hemisphere'' so as to include South American Indians. Ultimately, the Ad Hoc Committee decided that including South American Indians might present data problems for Federal agencies concerned with federally recognized tribes or Indians eligible for U.S. Government benefits.

Given that the Central and South American Indian population in the United States is so small, no significant issues arise with respect to measurement, data production, analytic, cost, or legislative or program needs.

5.3.2 Changes related to Asian and Pacific Islanders

The following suggested changes to Directive No. 15 concerning Asian and Pacific Islanders are discussed in this section:

- Should the ''Asian or Pacific Islander'' category be split into two categories? If yes, how should this be done?
- Should specific subgroups be listed under the current category?
- Should the term ''Guamanian'' or ''Chamorro'' be used?

5.3.2.1 Should the ''Asian or Pacific Islander'' Category be Split into Two Categories? If Yes, How Should this be Done?

The issue is whether to retain the current Asian or Pacific Islander category, or to split the category into two separate categories, one for Asians and one for Pacific Islanders. The argument in favor of such a split is that the current category places together peoples who have few social or cultural similarities. It is argued that having separate categories for Asians and

Pacific Islanders would result in more homogeneous groups, which would increase the comprehensibility and logic of the entire classification scheme. In addition, the two resulting groups are dissimilar on a number of measures. For example.

• *Education*—Although approximately the same numbers of Asians and Pacific Islanders graduate from high school, far fewer Pacific Islanders (about 11 percent of persons 25 years of age and older) than Asians (about 40 percent) obtain bachelors degrees

• *Income and employment*—According to 1990 census data, 5.2 percent of Asians over age 16 were unemployed, compared with 7.3 percent of Pacific Islanders. Median household income was $41,583 for Asians and $33,955 for Pacific Islanders.

• *Poverty*—The poverty rate was 13.7 percent for Asians and 16.6 percent for Pacific Islanders. (Fernandez, 1996)

Aggregating Asians and Pacific Islanders separately is not problematic in decennial census data as currently collected, since separate data are available for each population group. Other data collections do not provide the opportunity to collect data separately for Asians and Pacific Islanders. In these instances, since Pacific Islanders are a small group numerically, their inclusion does not strongly affect the statistics for Asians. For example, the poverty rate for the entire Asian and Pacific Islander category is 13.8 percent, as compared with 13.7 percent for Asians alone. Because Pacific Islanders were only 365,000 of the Asian and Pacific Islander total of 7,274,000 reported in the 1990 census (Fernandez, 1996), however, the situation of Pacific Islanders is frequently masked. For this reason it is possible to argue that users could make better use of data if there were separate Asian and Pacific Islander categories. Given their relatively small numbers, however, there is the question of whether Pacific Islanders are a large enough population group to warrant a separate category.

A complicating factor is the request to separate Hawaiians from other Pacific Islanders, and to include them in the American Indian category (see section 5.3.3.2). If Hawaiians are not counted with other Pacific Islanders, the remaining ''Non-Hawaiian Pacific Islander'' group becomes very small. About 60 percent (211,000) of the Pacific Islanders are Hawaiians (Fernandez, 1996). The remaining 154,00 Pacific Islanders may be too small a group to justify a separate category. A residual ''Asian and Non-Hawaiian Pacific Islander'' category might confuse Hawaiian respondents, since the word Hawaiian would occur in two places in the question, and could prove difficult for other respondents to comprehend. For these reasons it is possible to argue that the Pacific Islander category, assuming it meets some minimum threshold, should only be considered as a stand-alone category if Hawaiians continue to be included in that category.

With such small numbers, it might become difficult to obtain adequate sample data for Pacific Islanders at the State or other local level if the category were to stand alone. Unless it uses a methodology that calls for oversampling for Pacific Islanders, any national survey using a random sample of the general population would expect to find three Pacific Islanders per 2,000 cases. A study would have to have a sample in excess of 20,000 respondents to obtain thirty respondents without using a stratified sample. It is unlikely that Federal agencies could afford to plan a study calling for such a national sample in order to have reliable data for a separate Pacific Islander category.

In addition, only a few agencies, such as the Department of Education in its assessment of reading proficiency, currently collect data separately on Asians and Pacific Islanders. In a number of cases, the numbers of Pacific Islander students were too small to permit statistically significant estimates. For example, although the percentage of Pacific Islander students at or above a ''proficient'' reading level in fourth grade in 1994 could be determined nationally, sample sizes were too small to permit reliable estimates for the Northeast, Southeast, Central, and West regions of the United States. Estimates were published only for three of the fifty States, and the estimate for California was flagged for interpretation with caution (Campbell, *et al.*, 1996).

Currently, Directive No. 15 defines a member of the Asian and Pacific Islander category as a person having origins in any of the original peoples of the Far East, Southeast Asia, the Indian subcontinent, or the Pacific Islands (including, for example, China, India, Japan, Korea, the Philippine Islands, and Samoa). This definition does not clearly distinguish Asian from Pacific Islander areas. For example, by some definitions, Japan (an Asian country) could be considered a Pacific Island, and many of the peoples of the Philippines (also considered part of Asia) share linguistic and cultural features in common with Polynesians, Micronesians, and Melanesians. Further, the definition does not provide guidance about the classification of some groups. For example, Australian aborigines and the Papuan cultures of the South Pacific might be considered to be Pacific Islanders, although they have few social or linguistic affinities with the Polynesian, Micronesian, and Melanesian peoples otherwise included in the group.

Data production. Since the decennial census already codes and edits the Asian and Pacific Islander groups separately, data production in this case should not be affected by separating the Asian and Pacific Islander category. In data collection procedures that require a write-in for national origin, additional coding and editing would be required. Regardless of the size of the data collections at the national level, splitting this category will cause production difficulties for States with large populations of the two groups.

Analytic. Whenever a new category is established there are comparability discontinuities. In this case the discontinuities should be minor. It would be possible to recreate the antecedent category simply by adding the two categories together. Of greater difficulty would be trying to recreate data for earlier surveys using the two categories. Where population counts are large enough (as in the case of the decennial census), it should be a simple matter of disaggregation. In smaller studies, however, even those that oversampled for Asian and Pacific Islanders, splitting may be impossible.

Splitting the Asian or Pacific Islander category would have an additional effect in those areas where Asian and Pacific Islander populations have intermarried (such as Hawaii). Individuals with both Asian and Pacific Islander ancestry, who currently are able to respond in a single category, would have to choose between the two categories. They might respond as ''other race'' or as ''multiracial,'' if such a category were available. Thus, comparisons over time would be more difficult, inasmuch as certain individuals might no longer report either as Asian or as Pacific Islander.

Cost. There would be substantial costs to requiring all Federal agencies to collect data on Asians and Pacific Islanders separately, particularly for the larger samples that would be required to produce statistically significant data for the small residual Pacific Islander category. Additional decennial census costs would be marginal for data collection and processing, since Asian and Pacific Islander groups are handled separately now. Additional costs would be incurred in the preparation and

dissemination of new data products containing the split categories.

Legislative or program needs. Data on Asian and Pacific Islander populations are needed for apportionment in those States with large Asian or Pacific Islander populations. Splitting the Asian or Pacific Islander category into two categories might have an impact on apportionment for State legislative seats in States that have large populations of both groups.

5.3.2.2 Should Specific Groups be Listed Under the Asian or Pacific Islander Category?

The issue of whether to list specific groups in this category is important only for the decennial census, as most agencies do not collect data on separate Asian and Pacific Islander groups on a regular basis. A brief history puts this issue into perspective.

The 1980 Census contained a listing of Asian and Pacific Islander groups. The Census Bureau conducted several tests to see if Asian or Pacific Islander reporting would suffer if the specific groups were not listed and if a write-in line was provided instead. These tests indicated that data quality was the same or better in questions that did not list the groups separately. The 1986 National Content Test used the original 1980 version of the question, a modified version with a shorter list of subgroups, and a ''short'' version with a write-in box for specifying nationality after responding to the Asian or Pacific Islander category. The original 1980 version had an item nonresponse rate of 5.3 percent, the modified short-list version an item nonresponse rate of 2.7 percent, and the short version an item nonresponse rate of 1.6 percent. The Bureau of the Census found the item nonresponse for the 1980 version was unacceptably high: ''* * * traditionally, the race nonresponse rate has been small—under two percent.'' An additional test in Chicago also found that the short-question version produced better results than the original 1980 version. (Minutes and Report of Committee Recommendations, Census Advisory Committee, April 21 and 22, 1988.) For 1990, the Census Bureau recommended using the Asian or Pacific Islander category in the short form, in combination with a write-in box where all Asian and Pacific Islander groups could supply detailed data. However, citizen groups objected to this plan, and they were able to bring Congressional pressure to bear to restore the original list of Asian and Pacific Islander groups.

The arguments in favor of and against listing specific groups remain essentially the same as they were in 1988. An issue paper dated November 10, 1988, described the case for listing the Asian and Pacific Islander groups in terms of relations between the Census Bureau and the Asian and Pacific Islander community, which might have a negative impact on Asian or Pacific Islander participation in the census. The arguments in favor of listing the groups included: (1) Strong opposition and outrage in the Asian and Pacific Islander community could actually lead to poorer reporting of race; (2) intense emotional feeling have the potential of affecting the overall enumeration (therefore, coverage in the census); and (3) opposition was creating divisiveness among racial and ethnic groups.

The groups that advocated the listing of the Asian and Pacific Islander groups were also concerned that the proposed 1990 version, which would have required all Asian and Pacific Islander persons to write in a group, could not produce detailed statistics on each group in a timely manner.

The current arguments against listing the subgroups are again the same as those made in 1988. A Census Bureau paper dated August 9, 1988, discussed the anticipated problems with listing the Asian and Pacific Islander groups. It noted that the listing approach would affect the accuracy of the racial data for Asian and Pacific Islanders as well as for Whites, Blacks, American Indians, Eskimos and Aleuts in the following ways (based on 1980 census and 1990 census test experience):

- Nonresponse rate for the race item would be higher.
- Misreporting by Asians or Pacific Islanders (for example, groups not listed such as Cambodians or Laotians reporting in the Vietnamese category; Asians and Pacific Islanders misreporting in the category of ''Other race'' due to a lack of understanding of the category ''Other API'').
- More misclassifications by Black and White persons (for example, ethnic groups such as Italian, West Indian, and Greek writing in an entry in the ''Other race'' box instead of using the appropriate category).
- More misreporting in the ''Other race'' category due to confusion about the intent of the question and lack of understanding of categories.

These drawbacks are still likely to occur in formats that list the Asian and Pacific Islander groups, as reflected in the National Content Survey and other recent Census Bureau tests.

It is important to note that a number of these drawbacks pertain to the reactions of other groups to a question that lists countries of origin only for Asians and Pacific Islanders. In 1988, the Bureau of Census reported to the Minority Advisory Committee:

> ''The national origin groups listed in the race question caused confusion among respondents, and some racial groups protested that they were not specifically identified in the question. For example, some European and Black ethnic groups misinterpreted the race question; they also marked off the ''Other'' race category and wrote in their ethnic identification. That was not the question's intent, and the misreporting required a very expensive corrective operation both in the field and in the data processing offices.'' (Minutes and Report of the Minority Advisory Committee Recommendations, April 21–22, 1988)

The effectiveness of the question for other groups should be of concern in a decision about the listing of Asian or Pacific Islander groups in the decennial census.

An additional consideration, as before the 1990 census, is space. Although the format of the census instrument has changed from a grid to a booklet, space remains at a premium. This makes it difficult to add additional categories (such as persons from the countries of the former Soviet Union that should report in the Asian or Pacific Islander category) to the question to represent a changing Asian and Pacific Islander population.

Measurement. It is clear from the discussion above that the listing of Asian and Pacific Islander groups negatively affects general data quality with an item nonresponse rate more than four times higher than when group data are collected in a write-in format. The listing also has an effect on other racial categories, when respondents look for a relevant specific listing and then use the ''Other race'' category to supply ethnic or ancestral data.

The RAETT tested two variations in listing the groups that make up this category: listing them in alphabetical order and not listing them in alphabetical order. The results of this methodological difference are reported in Table 11–4R, ''Terminology Issue: Comparison of Panel B (Without Alphabetization of Asian and Pacific Islander) and Panel G (With Alphabetization of Asian and Pacific Islander) for the Asian and Pacific Islander Targeted Sample, By Race: 1996 RAETT.'' Of the ten groups listed (Chinese, Filipino, Hawaiian, Korean, Vietnamese, Japanese, Asian Indian, Samoan, Guamanian, and Other Asian and Pacific Islander), five reported higher numbers with alphabetization and five reported higher numbers without. However, only two groups recorded a statistically significant difference at the 90-percent confidence

level, one under each option. This seems to indicate that the manner in which the list is shown has no consistent effect on the category as a whole.

Data production. Part of the resistance to the short version of the census race question prior to 1990 (without the Asian and Pacific Islander subgroups) came from doubts that the Census Bureau would be able to code write-in responses in a timely manner. According to a Government Accounting Office report on the controversy, ''[d]elays in the publication of detailed Asian and Pacific Islander data after the 1980 census resulted in concerns about how the data from the 1990 census would be processed.'' The Census Bureau's plans to put new technology in place came too late to ease this concern (GAO, 1993). With the automated coding operation that is now in place, this argument in favor of listing Asian and Pacific Islander groups can no longer be made.

Editing may also be necessary if the list of Asian and Pacific Islander groups remains in the decennial census race question. Tests conducted during the 1980's found that recently migrated groups that were not listed did not use the ''other'' write-in as intended, but rather filled the circle next to a closely related group, crossed out the group's name, and wrote in their own country of origin. For example, Laotians and Cambodians (not listed separately) filled the circle by the category ''Vietnamese'' and then crossed out ''Vietnamese.'' The Bureau of the Census estimates that 6 percent of those reporting as Vietnamese did so in error. The exact figures are not known because most of the editing was done directly on the questionnaires, in the regions or in the processing centers, and records were not kept of these changes.

Analytic. Splitting the Asian or Pacific Islander category would not create a comparability problem if the definitions of the two groups remain the same. However, if Hawaiians are removed, the resulting groups would not be comparable over time.

5.3.2.3 Should the Term ''Guamanian'' or ''Chamorro'' Be Used?

In November 1995, the Bureau of the Census released a report on a focus group involving twelve Chamorro speakers held in the Washington, DC area. In the conclusion to the report, the author states that ''the term Chamorro should probably be substituted for Guamanian on the questionnaire * * *. All focus group participants indicated that they preferred Chamorro to Guamanian, although with varying degrees of intensity.'' It should be noted, however, that the sample underrepresented Chamorros born in the United States and non-Chamorro speakers. (Levin, 1995)

In the RAETT reinterview for the Asian and Pacific Islander targeted sample, respondents in households with at least one person who identified as Guamanian indicated they preferred Guamanian (58 percent), Chamorro (20 percent), had no preference (18 percent), or preferred both (4 percent). Respondents also indicated that Guamanian (72 percent) and Chamorro (79 percent) were acceptable terms to them.

There are no measurement, data production, analytic, cost, or legislative or program needs issues related to the current method of data collection.

5.3.3 Changes related to Hawaiians

Changes to Directive No. 15 as they relate to Hawaiians discussed in this section include:

- Should the term ''Native Hawaiian'' or ''Hawaiian'' be used?
- Should Hawaiians continue to be included in the ''Asian or Pacific Islander'' category; be reclassified and included in the ''American Indian or Alaska Native'' category; or be established as a separate, new category?

5.3.3.1 Should the Term ''Native Hawaiian'' or ''Hawaiian'' Be Used?

Two questions are raised by this issue. The first is how best to identify individuals who trace their ancestry to the people who lived in what is now the State of Hawaii prior to the arrival in 1778 of Captain James Cook. The second is how to help respondents differentiate between these individuals and others who are born in Hawaii but who are not descended from the indigenous people.

In the vital statistics system for the State of Hawaii, births are counted as Hawaiian if either parent is Hawaiian or part Hawaiian. The State is also developing a register of individuals who can trace their ancestry back to someone living in Hawaii before Captain Cook's 1778 visit to the Hawaiian Islands. Directive No. 15 itself does not provide guidance on this level of detail. Publications from the 1990 census use the term ''Hawaiian.'' The RAETT results shed some light on this issue as four panels include a ''Hawaiian'' category and two include a ''Native Hawaiian'' category.

The RAETT tested the term ''Native Hawaiian'' in Panels D and G. The results of this test are reported in Table 7–4R, ''Sequencing Issue in: Comparison of Panel D (Race Question First) and Panel B (Hispanic Origin Question First) for the Asian and Pacific Islander Targeted Sample, by Race: 1996 RAETT'' and Table 11–4R, ''Terminology Issue: Comparison of Panel B (Without Alphabetization of Asian and Pacific Islander) and Panel G (With Alphabetization of Asian and Pacific Islander) for the Asian and Pacific Islander Targeted Sample, by Race: 1996 RAETT.'' While no table specifically looks at the results using ''Hawaiian'' versus ''Native Hawaiian,'' it is possible to get an idea whether the terminology used affects the results. In Table 7–4R no statistical difference in the reporting of Hawaiians is shown, while in Table 11–4R a statistical difference in the reporting of Hawaiians is shown.

In neither comparison is the issue of using the Hawaiian or the Native Hawaiian terminology the only issue under consideration. Therefore, it is hard to interpret these results conclusively. On the one hand, the term ''Hawaiian'' does not appear to cause any confusion in the minds of respondents. But on the other hand, the term ''Native Hawaiian'' may not cause confusion either, and it might more clearly define the population the term is aimed at enumerating.

In the RAETT reinterview for the Asian and Pacific Islander targeted sample, respondents in households with at least one person who identified as Hawaiian indicated that they preferred Hawaiian (48 percent), Native Hawaiian (35 percent), had no preference (10 percent), or preferred another term (0.5 percent). Respondents also indicated that Native Hawaiian (84 percent) and Hawaiian (95 percent) were acceptable terms to them.

There are no measurement, data production, analytic, cost, or legislative or program needs issues related to this decision regardless of which option is selected.

5.3.3.2 Should Hawaiians Continue To Be Included in the ''Asian or Pacific Islander'' Category; Be Reclassified and Included in the ''American Indian or Alaskan Native'' Category; or be Established as a Separate, New Category?

In the public comments, some Native Hawaiians expressed a preference for the option of being included with American Indians and Alaska Natives in a category for indigenous peoples of the United States, possibly called ''Native Americans.'' They said that including them in the large ''Asian and Pacific Islander'' category resulted in data that do not accurately reflect their social and economic conditions. For example, Pacific Islanders have relatively high

poverty rates. They also have health issues and educational needs different from Asians. American Indian Tribal organizations opposed this option. Other comments against this option ranged from the term ''Native'' can ''mean any persons born in a particular area'' to the ''data would be less useful than currently for policy development, trend analyses, and needs assessment;'' and ''not useful for health research.''

Inclusion of Hawaiians in a category with American Indians and Alaska Natives would have a major impact on the picture of the social and economic conditions of American Indians and Alaska Natives; while Hawaiians make up 2.9 percent of the Asian and Pacific Islander category, they would represent 9.7 percent of a reconstituted ''American Indian or Alaskan Native'' category. (For detail on the State of residence of Hawaiians, see Table 5.1)

A separate Hawaiian category also was proposed. In addition, it was suggested that ''Hawaiian'' be changed to ''Hawaiian, part-Hawaiian,'' because most native Hawaiians are part Hawaiian and many, in the past, have categorized themselves as ''White.'' Those for this option say that it provides specific information for policy development, trends analyses, needs assessments, program evaluation, and civil rights enforcement. However, because Hawaiians are a small geographically concentrated population, this option may create a problem for surveys in states outside the Pacific Region. In most states there are not enough Hawaiians to form a sampling pool large enough to obtain findings that are significant in any way.

The 1990 census reported 211,014 Hawaiians, or slightly less than 0.01 percent of the total population of the United States. Hawaiians are a highly concentrated population: almost two-thirds (138,742) reside in the State of Hawaii. The second highest concentration is in California, which has more than one-sixth (34,447) of all Hawaiians. The third highest concentration is in the State of Washington, which has about 2.5 percent (5,423) of all Hawaiians.

Another option, not suggested, but always available, is for local areas with large Hawaiian or part Hawaiian populations to have a separate classification. If Hawaiian is not included in the minimum list of MOB categories, it could still be used by states, local governments, or federal agencies with a specific need for this category.

What category should include Hawaiians may be a question of the alternative bases for classification and intent. If the categories used are intended to classify the races as a function of geography, the individuals of Hawaiian ancestry should remain as a sub-category of the Asian or Pacific Islander category.

If, on the other hand, the goal is to classify the indigenous people of what is now the United States of America, then individuals of Hawaiian ancestry should be moved. However, this also raises a question about the other groups that are indigenous to various territories that are part of the United States—e.g., Guam, Micronesia, and the Virgin Islands. While a distinction could be made based on the fact that Hawaii is a State, this is nonetheless an issue that will likely need to be addressed in a future, if not in this, revision of the Federal standards.

More important, however, is the issue of whether classifying individuals of Hawaiian ancestry into the same category as the American Indians confuses matters regarding legal status. American Indians have a special legal status with the Federal Government as a result of treaties and legislation. It is important, if individuals of Hawaiian ancestry are categorized as ''Native Americans,'' that linkage to this special legal status be addressed and not left to interpretation or litigation.

BILLING CODE 3110–01–M

Table 5.1 Hawaiian Ancestry Population by State and as a Percent of American Indian, Eskimo, & Aleut (if classified here) and Asian or Pacific Islander – 1990 Census of Population

State	American Indian, Eskimo, and Aleut	Asian or Pacific Islander	Hawaiian Ancestry	Hawaiian Ancestry of AI,E,& A[1] (Percent)	Hawaiian Ancestry of API[2] (Percent)	Percent Hawaiian Ancestry
Hawaii	5,099	685,236	138,742	96.46	20.25	65.75
California	242,164	2,845,659	34,447	12.45	1.21	16.32
Washington	81,483	210,958	5,423	6.24	2.57	2.57
Texas	65,877	319,459	2,979	4.33	0.93	1.41
Oregon	38,496	69,269	2,415	5.90	3.49	1.14
Florida	36,335	154,302	2,049	5.34	1.33	0.97
Arizona	203,527	55,206	1,690	0.82	3.06	0.80
Nevada	19,637	38,127	1,534	7.25	4.02	0.73
New York	62,651	693,760	1,496	2.33	0.22	0.71
Utah	24,283	33,371	1,396	5.44	4.18	0.66
Virginia	15,282	159,053	1,384	8.30	0.87	0.66
Colorado	27,776	59,862	1,368	4.69	2.29	0.65
Illinois	21,836	285,311	1,000	4.38	0.35	0.47
North Carolina	80,155	52,166	963	1.19	1.85	0.46
Alaska	85,698	19,728	934	1.08	4.73	0.44
Pennsylvania	14,733	137,438	859	5.51	0.63	0.41
Georgia	13,348	75,781	847	5.97	1.12	0.40
Michigan	55,638	104,983	787	1.39	0.75	0.37
Ohio	20,358	91,179	785	3.71	0.86	0.37
Oklahoma	252,420	33,563	712	0.28	2.12	0.34
New Jersey	14,970	272,521	638	4.09	0.23	0.30
Maryland	12,972	139,719	636	4.67	0.46	0.30
Missouri	19,835	41,277	621	3.04	1.50	0.29
Indiana	12,720	37,617	528	3.99	1.40	0.25
Massachusetts	12,241	143,392	505	3.96	0.35	0.24
Tennessee	10,039	31,839	503	4.77	1.58	0.24
Idaho	13,780	9,365	476	3.34	5.08	0.23
South Carolina	8,246	22,382	426	4.91	1.90	0.20
Kansas	21,965	31,750	422	1.89	1.33	0.20
Louisiana	18,541	41,099	411	2.17	1.00	0.19
New Mexico	134,355	14,124	408	0.30	2.89	0.19
Minnesota	49,909	77,886	383	0.76	0.49	0.18
Wisconsin	39,387	53,583	371	0.93	0.69	0.18
Alabama	16,506	21,797	343	2.04	1.57	0.16
Kentucky	5,769	17,812	338	5.53	1.90	0.16
Connecticut	6,654	50,698	269	3.89	0.53	0.13
Iowa	7,349	25,476	244	3.21	0.96	0.12
Nebraska	12,410	12,422	243	1.92	1.96	0.12
Arkansas	12,773	12,530	226	1.74	1.80	0.11
Montana	47,679	4,259	179	0.37	4.20	0.08

Table 5.1: Hawaiian Ancestry Population (continued)

State	American Indian, Eskimo, and Aleut	Asian or Pacific Islander	Hawaiian Ancestry	Hawaiian Ancestry of AI,E,& A[1] (Percent)	Hawaiian Ancestry of API[2] (Percent)	Percent Hawaiian Ancestry
Mississippi	8,525	13,016	166	1.91	1.28	0.08
New Hampshire	2,134	9,343	116	5.16	1.24	0.05
Maine	5,998	6,683	115	1.88	1.72	0.05
Rhode Island	4,071	18,325	112	2.68	0.61	0.05
Dist.. of Columbia	1,466	11,214	101	6.45	0.90	0.05
Wyoming	9,479	2,806	93	0.97	3.31	0.04
West Virginia	2,458	7,459	91	3.57	1.22	0.04
North Dakota	25,917	3,462	76	0.29	2.20	0.04
South Dakota	50,575	3,123	74	0.15	2.37	0.04
Delaware	2,019	9,057	65	3.12	0.72	0.03
Vermont	1,696	3,215	25	1.45	0.78	0.01
Totals	1,959,234	7,273,662	211,014	9.72	2.90	100.00

[1]Percent Hawaiian Ancestry of a proposed American Indian, Eskimo, and Aleut racial category equals the number of Hawaiians divided by the sum of Hawaiian Ancestry plus the current American Indian, Eskimo, and Aleut racial category.

[2]Percent Hawaiian Ancestry of the Asian and Pacific Islander racial category equals Hawaiian Ancestry divided by the Asian and Pacific Islander racial category.

BILLING CODE 3110–01–C

The RAETT sheds some light on the number of individuals selecting the Hawaiian category under various reporting options. Table 1–4R (Multiracial Issue: Comparison of Panel A (No Multiracial Category) and Panel B (With a Multiracial Category) for the Asian and Pacific Islander Targeted Sample, by Race: 1996 RAETT,) and Table 6–4R (Multiracial Issue: Comparison of Panel C (''Mark One or More'' Instruction) and Panel H (''Mark All That Apply'' Instruction) for the Asian and Pacific Islander Targeted Sample, by Race: 1996 RAETT,) show that the addition of an option to report multiple races results in a lower reporting of Hawaiian only. Many Hawaiians select a multiple race option. Without a multiple reporting option, 9.20 percent of the Asian and Pacific Islander targeted sample report as Hawaiian (Panel A Table 1–4R). When a ''Multiracial'' category is offered (Panel B), the proportion selecting ''Hawaiian'' (only) drops to 5.48 percent. Table 6–4R shows that the proportion reporting Hawaiian (only) is 4.66 percent when the instruction is to ''mark one or more'' races (Panel C) and is 3.87 percent when the instruction is to ''mark all that apply'' (Panel H). The two panels in which multiple responses were allowed also showed an increase in the proportion reporting as ''Other Asian and Pacific Islander,'' 9.93 percent in Panel C and 7.57 percent in Panel H. This increase is due in part to recoding done by the Bureau of the Census to prepare tabulations for the RAETT. If ''Hawaiian'' and any other Asian or Pacific Islander category were marked, the respondent was classified as ''Other Asian and Pacific Islander.'' A more complete analysis of the multiple race reporting on RAETT among Hawaiians could provide additional insights.

Measurement. The measurement of individuals of Hawaiian ancestry in the decennial census or in those studies that identify this group would not be affected by reclassification of Hawaiians since there is no change in how Hawaiian ancestry is determined. However, such reclassification of those with Hawaiian ancestry would have substantial impact on the data consistency for both the resulting ''Asian or Pacific Islander'' category and the expanded ''American Indian'' category in the more typical cases where detail for individuals of Hawaiian ancestry is not collected/reported separately. It is likely that there would be no consistency across the classification change. It would be impossible to say with certainty whether differences in characteristics over time in either resulting category were a consequence of real change or of the new categorization of those with Hawaiian ancestry. Informing the data user about the discontinuity could be accomplished by footnotes. Data users interested in a time series would require additional information or special tabulations in the absence of specific subcategory data, which may not always be possible to produce.

Data production. Data production would not be affected by moving individuals of Hawaiian ancestry; the group would not be defined differently, but moved to a different tabulation category. Of more importance would be the need for a redesign of the published tables at the subcategory level, as well as the need for explanatory footnotes.

Analytic. While there should be no effect on who is reporting as being of Hawaiian ancestry, a change would have a major impact on the comparability over time of the aggregated, larger racial categories.

While this population is small in number, Hawaiians make up just under 3 percent of the current ''Asian or Pacific Islander'' category but would make up almost 10 percent of a newly broadened category that would include American Indians, Alaska Natives, and those of Hawaiian ancestry. Casual data users looking up information in an almanac or a statistical publication might be misled by the change. Researchers using race as a major analytic variable in longitudinal time series might have to adjust their time series.

Cost. The costs associated with reclassifying Hawaiians are hard to calculate. They include, but are not limited to, discarding current forms; the preparation of new forms and instructions; an educational campaign to inform people filling out forms as well as data users of the change; the need to check submissions over the short run to make sure the change has been properly made; and the fact that data for the next few years may be inaccurate as a result of misclassifications.

Legislative or program needs. Current legislative and program needs related to individuals of Hawaiian ancestry will be unaffected by this change. However, legislative and program needs related to American Indians would be affected by the need for an additional analytic step to account for the change. For example, Census figures from 1990 show a median family income of $21,750 for American Indians and Alaskan Natives with 31 percent of the individuals in this population below the poverty line. Median family income in 1990 for Asian and Pacific Islanders was $41,251, and 14 percent were below the poverty line (*1990 Census of Population, Social and Economic Characteristics: United States,* 1990 CP–2–1). These figures for Hawaiians (a very small proportion of the Asian or Pacific Islander category) were much closer to those for the Asians than to those for American Indians—$37,269 and 14 percent. Asians, however, are considerably more likely to have completed college (37.7 percent) than either Hawaiians (11.9 percent) or American Indians (9.3 percent).

In addition, moving individuals of Hawaiian ancestry to the American Indian category could affect apportionment at the State legislative—district level in local areas or States where the reclassification affects the resulting Asian and Pacific Islander or American Indian counts.

5.3.4 Other Terminology Issues

Other issues Related to Directive No. 15 concerning terminology covered in this section are:

- Should the term ''Black'' or ''African American'' be used?
- Should the term ''Hispanic'' or ''Latino'' be used?
- Should more than one term be used in either case?

5.3.4.1. Should the Term ''Black'' or ''African American'' be Used?

The terms used to identify population groups do not necessarily invalidate the categorization scheme, but they may have marginal effects on nonresponse rates and misreporting. They also could cause resentment among some respondents. Smith (1992) notes that the terms can be important because they are used by the particular group's members to indicate the achievement of standing in the greater community. In the case of Blacks, disagreements over terms can result among persons of different ancestries. Among Blacks of African-American heritage, a growing proportion express a preference for ''African-American'' over the term ''Black'' (Lavrakas, Schejbal, and Smith, 1994). On the other hand, Blacks with roots in the Caribbean or Africa do not identify with the term ''African-American'' (Denton and Massey, 1989; Billingsly, 1993).

Options that were investigated with respect to the Black category included using only Black, as currently, or using African-American instead.

Measurement. Testimony given at hearings held by OMB on proposed changes to Directive No. 15 stressed the importance of having categories that are generally understood and with which people could identify. This is a fundamental requirement if the principle of self-identification is to be honored. Moreover, supplying the Federal Government's definitions for the various population groups will be particularly important for recent immigrants.

The terms used for classification have to be both familiar and acceptable to the respondent. For instance, focus group participants from the Association of Public Data Users (APDU) believed that Jamaicans would resist identifying as African-American, but that they would identify as Black. If only African-American were offered, Jamaicans might turn to the ''Other'' category. This underscores the need for supplying a comprehensive definition of the category to interviewers and respondents.

The May 1995 CPS Supplement asked Black respondents to choose the term they preferred. Keeping in mind that their choices may have been influenced by the terminology in the race and ethnicity questions they already had received, ''Black'' was the term more preferred. However, while 44 percent chose ''Black'' almost as many in total selected either ''African-American'' (28 percent) or ''Afro-American'' (12 percent), while 9 percent gave no preference (Tucker *et al.*, 1996). Additional analysis of the CPS Supplement data revealed that preference was dependent on respondents' demographic characteristics. Young and well-educated Blacks were more likely to prefer ''African-American'' or ''Afro-American.'' The results of the National Content Survey generally coincide with the results from the CPS Supplement. ''Black'' was preferred by 45 percent of those identifying as Black, while 33 percent preferred ''African-American.''

As noted, problems could arise if terms are not defined or if certain national groups feel excluded by the terms. This may be a particular problem for example, for Caribbean Blacks.

The context in which data collection occurs must be considered when changing terminology. Against, mode of data collection will affect the way choices can be presented. Where observer identification is necessary, clear coding rules will need to accompany any changes in terminology. More precise population group definitions in instructions and data collection instruments will help State and local governments as well as private-sector organizations.

Data production. To the extent that some Blacks do not identify with the terminology provided, they may not respond or may check the ''Other race'' category when it is offered. In this case, specific answers would have to be coded. Better instructions and definitions may reduce this problem.

Analytic. Because there is diversity in the Black community, the terminology used to measure this population needs to be encompassing. Denton and Massey (1989) found that it is important to capture the complete ethnic identities of Blacks when studying living patterns. For example, they documented that Caribbean Blacks were less segregated from Hispanics than they were from other Blacks.

A number of Federal agencies have expressed concern that changes will make it difficult, if not impossible, to recreate or to aggregate data to the categories they currently are using. These agencies do not object to greater detail but do worry that aggregation to the current categories might not be

possible. Their concern is that some Blacks (or Hispanics) no longer would identify with the same category if terminology were changed. Both the Department of Defense and the Federal Bureau of Investigation suggested that part of the Black population, especially recent immigrants, could be misclassified if ''African-American'' were to replace ''Black.'' Furthermore, some of the public comment suggests that the term ''American'' should not be used in this category, given that it is not used in other categories such as Asian.

Cost. The costs involved in changing terminology would be small relative to some of the other possible changes. These costs would come from the development of new instructions, new definitions, and new forms designs. Some costs may be incurred for additional statistical adjustment and estimation procedures beyond those usually employed after each decennial census if distributions change as a result of new terminology. Changes in terminology should not increase costs much for those outside the Federal Government since these changes would be incorporated in the transition made to accommodate the new data from Census 2000.

Social costs may result whether changes are made or not made. Depending upon the decision, different interest groups may be unhappy.

Legislative or program needs. Many Federal agencies will expect to be able to make comparisons to past data series regardless of any changes. To the extent that changes in terminology prevent such comparisons, this will be a problem that must be resolved. However, the problems in this particular case are expected to be minimal relative to other possible changes. A survey of public school systems conducted by NCES (1996) found that a majority (55 percent) did not believe changing to ''African-American'' would be a problem, while 10 percent said it would be a significant problem. About 30 percent believed it would create some problems.

5.3.4.2 Should the Term ''Hispanic'' or ''Latino'' Be Used?

The issues with respect to terminology for the Hispanic category are somewhat different. Many Hispanics prefer to identify with their country of origin. As Hahn (1994) points out, ''Hispanic'' is a term created by the Federal Government and is not traditionally used by peoples with origins in Central and South America. In fact, the term appears to be a compromise among the various groups. Some researchers suggest using ''Latino'' instead (Hayes-Bautista and Chapa, 1987) while others are comfortable with ''Hispanic'' (Trevino, 1987). In either case some groups might mistakenly be included or excluded. For example, Italians might identify as Latino, but Filipinos would not. In addition to the broad category identifier, knowledge of the particular Hispanic subgroup is often desirable (Farley, 1993). The National Council of La Raza, for example, supports the collection of the respondent's subgroup.

In the case of Hispanic origin, possibilities include (1) using only Hispanic; (2) collecting Hispanic subgroup designation or country of origin; or (3) using other terms instead of Hispanic, such as ''Latino,'' ''Chicano,'' and ''Of Spanish Origin.'' In addition, instructions could be given for the respondent to mark ''No'' if not Hispanic. If an Hispanic subgroup is asked for, an ''Other'' category might be provided along with a space to specify the group.

Measurement. In the CPS Supplement, the term ''Hispanic'' was chosen by 58 percent of the respondents, and ''Latino'' and ''Of Spanish Origin'' were each selected by 12 percent. Another 10 percent indicated they had no preference, while 8 percent chose some other term. More than 60 percent of Mexicans and Puerto Ricans chose ''Hispanic,'' compared with a little over 40 percent among the other subgroups. Hispanics over age 50 were less likely than younger ones to prefer ''Hispanic.'' They were more likely than the others to choose ''Of Spanish Origin'' or ''Some other term.'' Again, the result from the National Content Survey paralleled the CPS Supplement findings. The term ''Hispanic'' was preferred by 47 percent of the respondent, ''Spanish'' by 21 percent, and ''Latino'' by 13 percent.

Differences in specific terms or subgroup identifiers might not be recognized by neutral observers, but they can be very important to the individual respondent. Even if observers could classify Hispanic correctly, identifying the particular subgroup (e.g., Puerto Rican, Cuban, Mexican, or other Hispanic) or distinguishing when someone is both Black and Hispanic (e.g., the Caribbean Blacks spoken of by Billingsly, 1993). Hahn, Truman, and Barker (1996) also found that even some proxies had troubles with this task.

Clearly, the quality of data will suffer when proxies or observers cannot correctly determine race and ethnicity, but respondent themselves are not always consistent in their responses to these questions. McKenney, *et al.* (1991) found this in examining reinterview data from the 1990 census. Overall, inconsistency was found to be low, but it was greatest for Hispanics who had been in this country for a long period of time or those who were born here, who only spoke English, and who said they were ''Other Spanish'' when asked to indicate their subgroup. The Hispanics of higher socio-economic status also show some inconsistency (Hazuda *et al.*, 1986). Those who are not Hispanic do not consistency mark ''No'' unless provided with an instruction to do so (Bates, 1991).

Kissam, Herrera, and Nakemoto (1993) concluded that ''Hispanic'' or ''Latino'' would be better than ''Spanish,'' but that asking for national origin would be even better, particularly for recent immigrants. The use of several terms or complicated instructions can be difficult both for recent immigrants and the illiterate. The effects of specific terms or the question format differ by mode of survey. Personal visits can overcome these problems best, but many surveys are no longer done this way. Mail surveys do lay out the alternatives clearly for respondents, but this mode assumes literacy. Telephone surveys may be most affected by wording and format.

Data production. As with Blacks, to the extent that some Hispanics do not identify with the names of the categories provided, they may not respond or may check the ''Other'' category when it is offered (either in the Hispanic origin question or the race question). When more detailed information on Hispanics is collected, the write-in answers in the ''Other'' category must be coded. Editing of open-ended responses may be required. Imputation will be needed for those who do not identify with the terms provided and who leave the question blank. This may be a particular problem for Hispanics failing to give a subgroup. This editing is on top of that resulting from Hispanics failing to respond to the race question and non-Hispanics not answering the ethnicity question.

To the extent that the failure to answer the race and ethnicity questions because of disagreement with the terms is not random, both the Blacks and the Hispanics that do answer the questions will not be representative. This would be an additional source of error affecting statistical distributions including the counts of subgroups. Weighting adjustments would be needed, but could be carried out only if the necessary information is available.

Analytic. One methodological point that those studying the Hispanic community agree on is that more detailed information about respondents'

origins is needed. This is certainly true for substantive analysts, although some Federal agencies may not need this level of detail to carry out their specific mandates. Researchers stress that a simple ''yes-no'' question is not sufficient for analyzing differences in the diverse Hispanic community. Gimenez (1989) concluded that a global identification is not useful because Hispanics are so heterogeneous. The members of APDU who were interviewed indicated that they often must distinguish between different Hispanic subgroups in their work in local communities. Wong and McKay (1992) argued that comparisons across Hispanic subgroups actually are more important than comparisons of Hispanics with Blacks, Whites, and Asians. Kleinman (1990), in looking at health outcomes, came to the same conclusion.

The 1990 census did request a Hispanic subgroup. Whether or not Hispanic subgroup is ascertained, the Hispanic community is so diverse that the terminology used needs to be encompassing. To the extent that some Hispanics cannot identify with the terms used, a part of this diverse population might be missed. Furthermore, with the increasing Hispanic immigration, subgroups might need to be tracked and terminology might need to change more rapidly than in the past in order to provide the same level of knowledge.

Cost. Most of the same issues discussed for Blacks apply in this case, with two additional ones. More space on forms would have to be allocated if information on Hispanic subgroups is desired. The amount of open-ended coding in the race question probably would be affected more by changes in terminology for Hispanics than for Blacks.

Legislative or program needs. Federal agencies will have the same concerns about changes in categories for Hispanics as they do about changes for Blacks.

5.3.4.3 Should More Than One Term Be Used for Black or for Hispanic?

One possible solution to the problems arising from the choice of terms the Black and Hispanic categories is the use of more than one term in the names of the categories. If several terms were used, respondents who identified with any one of the terms could select the category. Options considered as part of this review included (1) some combination of ''Black,'' ''African-American,'' and ''Negro'' and (2) some combination of ''Hispanic,'' ''Latino,'' ''Chicano,'' and ''of Spanish Origin.''

Measurement. If several terms are used (or, possibly, with just a change in terms), the current definitions might need revision. For example, a recommendation was offered at the Workshop on the Federal Standards for Racial and Ethnic Classification, held by the National Academy of Sciences, to use the term ''African-American'' in addition to the term ''Black'' (1996). The evidence from the CPS Supplement suggests that using both Black and African-American would satisfy most of the respondents in that category. The same would be true for using several terms in the Hispanic origin question. In both cases, the populations identifying with each category could be more diverse. At that point, the identification of subgroups might become more critical for analytic purposes.

The Hispanic origin question in Panel 3 of the NCS read, ''Is this person of Spanish/Hispanic origin?'' Additionally, in Panel 3 the Hispanic origin question came immediately before the race question and the race question did not offer a multiracial category as a reporting option. The Hispanic origin question in Panel 4 of the NCS read, ''Is this person Spanish/Hispanic/Latino?'' Further, as in Panel 3, the Hispanic origin question in Panel 4 came immediately before the race question but, unlike Panel 3, the race question in Panel 4 offered a multiracial category as a reporting option.

The NCS found that Panel 4 (where the race question included the multiracial category) had a lower percentage of respondents who reported as Hispanic in the Hispanic origin question compared with Panel 3—6.9 percent in Panel 4 compared with 9.0 percent in Panel 3. This decline was particularly pronounced among Mexicans, declining from 5.6 percent in Panel 3 to 3.2 percent in Panel 4.

Additional analyses of responses to comparable panels were conducted to determine whether the decline in Hispanic origin identified by these data is due to the fact that a multiracial category was included in the race question or to the change in the wording of the Hispanic origin question (''Spanish/Hispanic origin'' in Panel 3, and ''Spanish/Hispanic/Latino'' in Panel 4). These analyses revealed that neither the multiracial category in the race question nor differences in the wording of the Hispanic origin question was associated with a statistically significant decline in the proportion of Mexicans or of Hispanics in those panels 3 and 4. Moreover, additional analyses using NCS reinterview data ruled out the possibility that significantly different proportions of Mexicans were sampled in Panels 3 and 4.

Given these analyses, it is not clear whether the decline in the percentage who reported as Hispanic in Panel 4 relative to Panel 3, particularly among the Mexican subgroup, is due to the presence of the multiracial category in the race question, the wording of the Hispanic origin question, the placement of the Hispanic origin question before the race question, or the confluence of these factors. Thus, the drop in reporting as Hispanic, and particularly as Mexican, on Panel 4 remains unexplained.

Data production. If several terms were used for the Hispanic origin and Black categories, it is possible that the coverage of these populations would be improved. A significant number of Hispanics, however, might still choose an ''Other race'' category or not answer the race question, as demonstrated by the NCS and the CPS Supplement.

Analytic. The use of several terms may increase the diversity of those comprising the Black and Hispanic populations. Thus, their characteristics may be different than would be the case if only one term were used. In fact, while a more complete picture of these groups may result, that picture could be confusing. Subgroup differences might be more important.

Cost. Again, costs will be small compared to some of the other changes being considered, and these costs are for the same items already mentioned. However, costs for open-ended coding are likely to be reduced if multiple terms are used, because the residual or ''Other'' category will be chosen less often.

Legislative or program needs. The use of several terms for Blacks and Hispanics still could produce a lack of comparability with earlier data. Slightly larger population counts may result for the groups from the use of multiple terms. The effects could be more pronounced in some local areas than in others, depending on the diversity of the population.

5.3.5 Other New Category Issues

Public comment included suggestions to add other population groups to the minimum set of categories currently used for all data collection and reporting by the Federal Government. Some of the issues raised (summarized in OMB's August 1995 **Federal Register** notice) were: Adding categories for White ethnic groups; adding a category for persons for Arab or Middle Eastern descent; adding a category for Creoles; and adding a category for Cape Verdeans. The discussion below focuses

on issues surrounding the addition of categories for Arab or Middle Easterner and for Cape Verdean.

There were a number of public comments which requested that categories for European-Americans and for German-Americans be included in the revised Directive. This issue was not addressed in the research program. However, such data are available from the ancestry question on the decennial census.

5.3.5.1 Should an Arab or Middle Eastern Category Be Created and, If So, How Should It Be Defined?

The argument for creating a separate category for persons of Arab or Middle Eastern descent is similar to that made for persons of Hispanic descent: they are a diverse population group having some language and cultural characteristics in common. Like Hispanics, persons of Arab or Middle Eastern descent can be of any race. Many are White but there also are many Black and other racial descent. The number of persons (1.6 million, or 0.7 percent of the U.S. population in 1990) who report in one of the ancestries that the Census Bureau has shown under the heading of ''North Africa and Southwest Asia'' (a very broad, geographically based categorization) exceeds that of many of the groups shown on the decennial census form. (An alternative to adding an ethnic group would be a short-form question on ethnicity/ancestry—replacing or in addition to the Hispanic origin question—with space for a write-in of specific, less common ancestries.)

It has been suggested that in order to track problems related to discrimination against Arabs or Middle Easterners, some way of identifying them separately is necessary. Then, if a pattern of problems can be discerned, a case could be made to alter legislation in which specific protected groups are identified. It is also contended that recent Arab and Middle Eastern immigrants have the same problems as those from Asia, Central or South America, or Africa.

Some believe that having a separate category for persons of Arab or Middle Eastern descent would more easily qualify them for program benefits aimed at the socially and economically disadvantaged. On the other hand, an article in *American Demographics* states that, while it is true that Arab Americans suffer from stereotyping and negative press, it is equally true that they are younger, more educated, and more affluent than the average American. (''The Arab-American Market,'' *American Demographics,* January 1994)

Currently there is no recognized common identity for this population group—neither a generally accepted name nor a common description. One characteristic that many Arab or Middle Easterners have in common is the Moslem religion; but many others are of other religious backgrounds as, for example, Lebanese Christians. Because of the separation of church and state in the United States, data are not collected on religious affiliations. Conversely, many Moslems do not have race or geographic origin in common—they come from Asia, Sub-Saharan Africa, etc. If the category were called or included ''Middle Easterner'' in its title, would it include persons from a non-Arab state such as Israel?

While a name and a definition could be imposed for this suggested new category, in a decennial census respondents need to understand clearly the concepts and the definitions of the classifications without necessarily having to read a definition. The public comment showed there is no agreement about the Middle Eastern countries to be included; this is further confused by the fact that there are Arab countries in North Africa and that the Middle East includes Israel, a non-Arab country.

The research to develop a definition and a commonly understood name (and the information campaign that would be required to inform the public of the new category) would be difficult to undertake in time for the 2000 census. While such research has not always been carried out prior to including a category in the decennial census, such a decision without research would be hard to rationalize given the intensive research on other issues surrounding race and ethnicity.

The requisite research could allow consideration of incorporating a new classification that would identify persons of Arab and Middle Eastern descent in a future classification system. The 1990 census indicates that this is a growing population group—with a high proportion of foreign-born and recent immigrants. According to a Census Bureau report (1990 CP–3–2), 40 percent of persons of Arab ancestry are foreign-born and half of these foreign-born came to the United States between 1980 and 1990.

Measurement. No research has been conducted on the quality and consistency of reporting of persons of Arab or Middle Eastern descent on the race item on previous decennial censuses. Directive No. 15 instructs persons of Middle Eastern or North African descent to report their race as ''White.'' However, it is not known how well this instruction is followed—or even if persons know that such a definition exists. Over the years there has been confusion about how persons of these ancestries should respond—''Asian,'' ''White,'' or ''Other race.'' Requests for consideration of adding an Arab or Middle Eastern category have not been consistent in the suggested name and the criteria for the definition of what geographic area should be encompassed.

Even in 1990 census reports, the definition of Arab was not consistent. Two reports on ancestry, *Ancestry of the Population in the United States* (1990 CP–3–2) and *Detailed Ancestry Groups for States* (1990 CP–S–1–2), used different definitions of ''Arab,'' which resulted in different counts of persons. A comparison is presented in Table 5.2.

BILLING CODE 3110–01–M

Table 5.2: Definition of "Arab" and "North African and Southwest Asia" from Decennial Census Reports on Ancestry

Ancestry Group	Arab (CP-3-2)	North Africa and Southwest Asia (CP-S-1-2)
Algerian	#	X
Alhucemas	#	*
Arab	#	X
Armenian		X
Assyrian		X
Bahraini	#	*
Berber	#	*
Egyptian	X	X
Iranian		X
Iraqi	X	X
Israeli		X
Jordanian	#	X
Kaldany		*
Kurdish	#	*
Kuwaiti	#	*
Lebanese	X	X
Libyan	#	*
Middle Eastern	#	X
Moroccan	#	X
North African	#	*
Omani	#	*
Palestinian	X	X
Rio de Oro	#	*
Saudi Arabian	#	X
South Yemen	#	*
Syrian	X	X
Tunisian	#	*
Turkish		X
United Arab Emirates	#	*
Yemeni	#	X

Note: See paragraph preceding Table 5.2 for definitions of the codes.

BILLING CODE 3110–01–C

The data on ancestries that are marked ''X'' on Table 5.2 were shown separately in the respective reports. Ancestries marked ''#,'' including the specific reporting of ''Arab'' as an ancestry, were grouped and shown as a balance category, ''Other Arab,'' in *Ancestry of the Population in the United States.* In contrast, in *Detailed Ancestry Groups for States,* ''Arab'' was shown as a separate category, not grouped with other ancestries. In this latter report, the ancestries that are marked with an asterisk on Table 5.2 were combined into a balance category called ''Other North African and Southwest Asian, n.e.c. (not elsewhere classified).''

Table 5.3 presents data from *Detailed Ancestry Groups for States.* It shows the number of persons reporting in any of the categories listed, as well as the number who reported specifically as ''Arab'' or ''Middle Eastern.'' The report carries a footnote stating that these two categories are ''a general type response, which may encompass several ancestry groups'' (no further explanation is provided).

Given the lack of a generally understood concept, should the term Arab or Middle Eastern be used and be defined as persons whose ''mother tongue'' or culture was Arabic? Or should the category be based upon a strict geographic definition (and if so, which countries should be included)? Public comment included the following suggested names: Middle Eastern; Middle Easterner; Arab American; Middle Eastern or Arabic heritage; Arab American and other Middle Eastern; and West Asian. In any case, implementation would require a consensus building effort to arrive at appropriate terminology and a definition. In addition, the implementation of such a category on a 100-percent basis would require more instruction than is typically given on a 100-percent item in the decennial census. The closest approximation would be a listing such as that given on the 1990 census long form ancestry item.

BILLING CODE 3110–01–M

Table 5.3 Cape Verdean and North African & Southwest Asian Ancestry From 1990 Census Reports, by State

	Total Population	Cape Verdean		North African and Southwest Asian[1]		Middle Eastern	Arab
		Number	Percent	Number	Percent	Number	Number
United States	248,709,873	50,772	0.020	1,631,677	0.656	7,656	127,364
Alabama	4,040,587	0	0.000	8,079	0.200	18	757
Alaska	550,043	20	0.004	903	0.164	0	148
Arizona	3,665,228	104	0.003	18,791	0.513	99	1,600
Arkansas	2,350,725	67	0.003	2,685	0.114	2	303
California	29,760,021	2,433	0.008	454,146	1.526	1,836	27,688
Colorado	3,294,394	29	0.001	12,714	0.386	55	1,394
Connecticut	3,287,116	3,047	0.093	23,666	0.720	53	815
Delaware	666,168	0	0.000	2,507	0.376	0	250
Dist of Columbia	606,900	145	0.024	4,809	0.792	43	493
Florida	12,937,926	718	0.006	75,269	0.582	324	7,233
Georgia	6,478,216	204	0.003	16,822	0.260	82	1,198
Hawaii	1,108,229	50	0.005	2,303	0.208	35	254
Idaho	1,006,749	0	0.000	1,460	0.145	8	183
Illinois	11,430,602	111	0.001	69,074	0.604	283	10,468
Indiana	5,544,159	53	0.001	12,535	0.226	23	1,513
Iowa	2,776,755	0	0.000	5,521	0.199	58	391
Kansas	2,477,574	69	0.003	6,792	0.274	75	579
Kentucky	3,685,296	60	0.002	6,796	0.814	20	569
Louisiana	4,219,973	84	0.002	13,227	0.313	59	1,271
Maine	1,227,928	57	0.005	4,688	0.382	2	156
Maryland	4,781,468	484	0.010	33,359	0.698	266	2,160
Massachusetts	6,016,425	29,326	0.487	84,673	1.407	256	2,782
Michigan	9,295,297	85	0.001	112,100	1.206	161	14,842
Minnesota	4,375,099	37	0.001	13,536	0.309	116	751
Mississippi	2,573,216	12	0.000	4,812	0.187	29	160
Missouri	5,117,073	36	0.001	13,706	0.268	85	1,090
Montana	799,065	0	0.000	1,514	0.189	2	52
Nebraska	1,578,385	21	0.001	4,195	0.266	13	310
Nevada	1,201,833	22	0.002	7,357	0.612	0	553
New Hampshire	1,109,252	114	0.010	8,646	0.779	0	307
New Jersey	7,730,188	436	0.006	82,634	1.069	491	5,311
New Mexico	1,515,069	21	0.001	5,177	0.342	44	712
New York	17,990,455	1,099	0.006	181,706	1.010	1,618	12,884
North Carolina	6,628,637	211	0.003	15,105	0.228	45	1,348
North Dakota	638,800	0	0.000	1,374	0.215	25	26
Ohio	10,847,115	214	0.002	54,716	0.504	96	5,340
Oklahoma	3,145,585	44	0.001	10,441	0.332	42	790
Oregon	2,842,321	19	0.001	10,864	0.382	67	866
Pennsylvania	11,881,643	346	0.003	55,698	0.469	176	2,893
Rhode Island	1,003,464	10,080	1.005	13,743	1.370	6	380

	Total Population	Cape Verdean		North African and Southwest Asian[1]		Middle Eastern	Arab
		Number	Percent	Number	Percent	Number	Number
South Carolina	3,486,703	78	0.002	7,881	0.226	39	608
South Dakota	696,004	0	0.000	1,599	0.230	0	49
Tennessee	4,877,185	81	0.002	9,751	0.200	99	1,085
Texas	16,986,510	264	0.002	67,449	0.397	469	7,067
Utah	1,722,850	20	0.001	5,583	0.324	0	404
Vermont	562,758	23	0.004	2,440	0.434	10	55
Virginia	6,187,358	387	0.006	42,941	0.694	248	4,122
Washington	4,866,692	51	0.001	17,148	0.352	122	1,725
West Virginia	1,793,477	0	0.000	6,457	0.360	0	256
Wisconsin	4,891,769	10	0.000	11,879	0.243	50	1,139
Wyoming	453,588	0	0.000	406	0.090	6	34

[1] Includes persons who reported the following ancestries: Algerian, Alhucemas, Arab, Armenian, Assyrian, Bahraini, Berber, Egyptian, Iranian, Iraqi, Israeli, Jordanian, Kalday, Kurdish, Kuwaiti, Lebanese, Libyan, Middle Eastern, Moroccan, North African, Omani, Palestinian, Rio de Oro, Saudi Arabian, South Yemen, Syrian, Tunisian, Turkish, United Arab Emirates, and Yemeni.

Source: U.S. Bureau of the Census, 1990 Census of Population, Supplementary Reports, Detailed Ancestry Groups for States, 1990 CP-S-1-2.

BILLING CODE 3110–01–C

Data production. If a separate category specifically for Arab or Middle Eastern were presented on the decennial census form, no further coding would be necessary. However, it would be advisable to compare the reported race to any other information collected in the decennial census (e.g., country of birth and ancestry, if these data are collected), to be able to understand the reported information better.

Analytic. The addition of a racial category in which persons of Arab or Middle Eastern descent might respond could reduce the total number of Whites counted in the next census. If this category were generally understood and only persons who previously responded ''White'' reported into this new category, one could compare the numbers of Whites between censuses (or other Federal data collections) by adding the Arab and Middle Eastern numbers to the numbers of persons reporting White to approximate the numbers of Whites in previous collections. However, the number of persons considering themselves to be Arab or Middle Eastern who actually reported in the White category is unknown; in the 1980 and 1990 censuses, many may have reported into the ''Asian or Pacific Islander'' category rather than the ''White'' category. If this was the case, then adding the numbers of persons reporting into a new ''Arab or Middle Eastern'' category to those reporting ''White'' could result in a higher number of ''Whites'' overall.

If an ethnic category were added, rather than a racial category, there would no reduction in the number of any racial category. Before such an addition could be made, however, there would have to be agreement on how the new category would be defined. As the public comments have indicated, this is not an easy task.

Cost. The cost of collecting information about persons of Arab or Middle Eastern descent from the decennial census is not known. Components of the cost are the cost of adding a specific category to the form itself and then the cost of analyzing the resultant data to determine its quality and usefulness. The cost of tabulations of data would incrementally increase with the addition of a new category. As Table 5.2 indicates, the 1990 census reports did tabulate Arab or Middle Easterner, but under two different definitions.

Legislative or program needs. At this time, there are no extant Federal legislative needs or specific program rule requirements for data on Arabs or Middle Easterners. Persons who have requested that this information be collected in the 2000 census and other Federal data collections make the argument that the information is needed in order to make a case for changes in civil rights and related legislation. An example of this contention appeared in a public comment, which erroneously held that under current civil rights legislation ''A Korean shopkeeper is protected but a neighboring Arab or Middle-Eastern shopkeeper is not'' (letter received by OMB during public comment period). Others would argue that current civil rights laws provide for a means of seeking redress for discrimination.

5.3.5.2 Should a Cape Verdean Category be Created?

Cape Verde is a country consisting of a number of islands off the west coast of Africa at about 15 degrees latitude. For many years the islands were a Portuguese colony. The population of the islands is generally a mix of Black and White. As an island nation, its population depended on the ocean for economic survival. As skilled seamen, many islanders immigrated to New England to take part in the whaling industry. According to a Census Bureau report, *Ancestry of the Population of the United States* (1990 CP–3–2), 71 percent of all persons of Cape Verdean ancestry are native-born, and 18 percent are

foreign-born and are not citizens. (Thus, the proportion of Cape Verdeans who are native-born is lower and the proportion of foreign born noncitizens is higher than for the total U.S. population: for the total U.S. population 92 percent were native-born and 5 percent were foreign-born and were not citizens.)

As of the 1990 census, 51,000 persons reported Cape Verdean ancestry or ethnicity (0.02 percent of the total U.S. population). They are a population that is concentrated in four Northeastern states; 86 percent of persons who reported Cape Verdean ancestry lived in Massachusetts (58 percent), Rhode Island (20 percent), Connecticut (6 percent), and New York (2 percent). Another 5 percent of the Cape Verdean ancestry population resided in California. While they are a very small percentage of the U.S. population as a whole, they made up 1.0 percent of the Rhode Island population, 0.5 percent of the Massachusetts population, and 0.1 percent of the Connecticut population.

Measurement. Discussion with respect to this population group is limited because the only previous measures come from the ancestry/ethnicity questions in the census long forms of 1980 and 1990. This discussion assumes that if there were a separate ethnic category, about the same numbers of people would report as Cape Verdean as in the 1990 ancestry question.

Because a distinct ethnic category for such a small and geographically concentrated population group may not be possible, even on the decennial census, the Cape Verdean population might also find acceptable a multiracial or ''Other race, specify'' category that required specification of the respondent's component races. This question, combined with the use of the ethnicity/ancestry question that was tested as one of the options in the RAETT, may be a feasible and acceptable form of reporting. The addition of a multiracial category on other Federal forms would allow persons to report as multiracial (Cape Verdean) on these as well. If achieving a count of Cape Verdeans on a Federal form at the national level through the race question is desired, then an educational program would be required in order to inform persons that they can report this way. However, there has been no research concentrated on this population group; hence, it is not known how they would report given race classifications such as ''multiracial'' or ''Other race, specify.''

Perhaps the most satisfactory solution for counting Cape Verdeans is a local one. The four states with the highest numbers of Cape Verdeans in their populations (Massachusetts, Connecticut, New York, and Rhode Island) could find some means to count them for local and state purposes—for example in school administrative records systems, in employment and unemployment data, and in vital records systems. If guidance is given on how to aggregate this population into the Federal categories, there should be little impact for the State's record systems.

Data production. Cape Verdeans often write in ''Cape Verdean'' after marking the ''Other race'' category.

Analytic. In the absence of specific research, it is unclear how other race categories would be affected if a separate Cape Verdean category were established.

Cost. The cost of collecting information about Cape Verdeans by adding a new category in the decennial census is not known. If such information were collected on a 100-percent basis, the cost would be significantly higher than was experienced in coding responses to the ancestry item on the long form sample of one-sixth of all households.

Legislative or program needs. Currently, there are neither Federal legislative needs nor programmatic needs for these data on the national level. State-level program needs for information on Cape Verdeans are likely to exist in those states where there are significant concentrations of this population.

Chapter 6. Recommendations and Major Findings

6.1 Summary of Recommendations and Major Findings

Research conducted as part of the review of Directive No. 15 has produced a considerable amount of information about the issues covered in this report. The sources of this information have included public comments gathered from hearings and responses to two Office of Management and Budget (OMB) notices published in the **Federal Register**, opinions of experts in the area of race and ethnicity, small-scale ethnographic and cognitive laboratory studies, and several national tests sponsored by Federal agencies. This section presents the recommendations of the Interagency Committee for the Review of the Racial and Ethnic Standards to OMB for how Directive No. 15 should be changed. It also summarizes the major research findings for the issues addressed by the recommendations. These findings are based on estimates from sample surveys.

The recommendations concern options for reporting by respondents, formats of questions, and several aspects of specific categories, including possible additions, revised terminology, and changes in definitions. Instructions for interviewers, the wording of questions, and specifications for tabulations are not addressed in the recommendations. The need for separate guidelines covering these topics is discussed at the end of the chapter. As in the current Directive No. 15, the recommendations are designed to provide *minimum* standards for Federal data on race and ethnicity. The recommendations continue to permit the collection of more detailed information on population groups to meet the needs of specific data users, provided the additional detail can be aggregated to comply with the minimum standards.

6.1.1. Recommendations Concerning Reporting More Than One Race

- *When self-identification is used, a method for reporting more than one race should be adopted.*
- *The method for respondents to report more than one race should take the form of multiple responses to a single question and not a ''multiracial'' category.*
- *When a list of races is provided to respondents, the list should not contain a ''multiracial'' category.*
- *Two acceptable forms for the instruction accompanying the multiple response question are ''Mark one or more * * *'' and ''Select one or more * * *''*
- *If the criteria for data quality and confidentiality are met, provision should be made to report, at a minimum, the number of individuals identifying with more than one race. Data producers are encouraged to provide greater detail about the distribution of multiple responses.*
- *The new standards will be used in the decennial census, and other data producers should conform as soon as possible, but not later than January 1,2003.*

The multiracial population is growing, and the task of measuring this phenomenon will have to be confronted sooner or later. Adopting a method for reporting more than one race now means that the demographic changes in society can be measured more precisely with a smaller discontinuity in historical data series than would occur in the future. Moreover, while technical concerns should not govern the decision, new procedures will be needed in any event, given that at least

0.5 percent of respondents to the 2000 Census are likely to select more than one race even if told to select only one. Allowing respondents in Federal data collections to select more than one race will be consistent with the trend toward this option at the state level, and may encourage the states to conform to a Federal standard.

Methods for reporting more than one race have been tested in both self-administered and interviewer-administered settings with similar results. This change will involve costs, but they are likely to be manageable and probably would be incurred eventually. The counts for Whites and Blacks, at least in the short term, will not likely be affected by allowing the reporting of more than one race; for populations whose counts could be affected, the information can be recovered to some degree with tabulation procedures. Standardized tabulation rules need to be developed by the Federal agencies working in cooperation with one another. When results from data collection activities are reported or tabulated, the number selecting more than one race should be given, assuming that minimum standards for data quality and confidentiality are met. Data producers are encouraged to provide greater detail about the distribution of multiple responses.

Allowing multiple responses is preferable to establishing a multiracial category, given the lack of legislative need for a specific count of the multiracial population and some of the drawbacks associated with the use of that category. There is no general consensus for a definition of ''multiracial,'' as reflected in the public comment and in current state legislation requiring a multiracial category. A multiracial category is more likely to be misunderstood by respondents, resulting in greater misreporting. If a multiracial category were to be used (with write-in lines or a follow-up question), it would require either more space or more coding. An ''Other'' category with a multiracial example may be less likely to produce accurate data, may be offensive, and will require coding. Although self-identification should be greatly encouraged, its use is not always feasible or appropriate. When observer identification is used, determining a multiracial background by observation may be difficult, if not impossible.

Since data producers will be given until 2003 to conform to the new standards, additional research could be conducted in the context of the different data collection initiatives. This research might estimate the effects in the different settings and evaluate methods for data tabulation to meet users' needs. This data was chosen because information from Census 2000 will be available then for use in conjunction with other Federal data collections. It is expected, however, that data producers will begin using the new standards as soon as possible.

6.1.1.1 Finding Concerning a Method of Reporting More Than One Race

Findings favoring adoption of a method for reporting more than one race:

- Between 1 and 1.5 percent of the public select a multiracial category when offered an opportunity to do so.
- The opportunity to identify with more than one race promotes self-identification, may increase self-esteem, and may reduce nonresponse to the race question.
- The multiracial population has grown over the past 25 to 30 years.
- Some multiracial individuals strongly advocate the change.
- Some states have already begun allowing individuals to identify with more than one race using a multiracial category.
- Approximately 0.5 percent of respondents to self-administered surveys, including the 1990 census, selected more than one race even when asked to select only one race.
- Allowing individuals to report more than one race may provide a more complete report of a changing society.
- Allowing individuals to report more than one race could increase the accuracy of racial reports, and some inconsistencies in racial reporting may be eliminated.
- The counts for Whites and Blacks, at least in the near term, are unlikely to be affected.
- The counts for affected races can, to some degree, be recovered using various tabulation procedures.
- Test results in self-administered surveys and interviewer-administered surveys have produced similar estimates of individuals who are likely to report more than one race.
- The process for reapportionment and redistricting is not likely to be affected.

Findings not favoring adoption of a method for reporting more than one race:

- There is a potential for lowering counts for some groups, such as American Indians and Alaskan Natives and Asians and Pacific Islanders.
- Advocacy groups for some populations have strongly opposed the change.
- Time series and other analyses will have to account for the change.
- Alternative tabulations will be needed to carry out some program requirements, and this may be in conflict with the principle of self-identification.
- The effects of survey mode (self-administered or administered by interviewer, over the telephone or in person) may be accentuated, and data quality may suffer if instructions for reporting more than one race are not as successfully communicated to the respondent in some modes as in others.
- Enforcement of the Voting Rights Act might be affected by the reporting of more than one race.
- Only a subset of multiracial individuals may choose to identify with multiple races, so estimates for this population might be questioned.
- Data processing systems may have to be modified to incorporate tabulation procedures for reporting more than one race.
- Data collection instruments, instructions, and procedures will have to be modified, and more emphasis will need to be placed on the creation of instructions for respondents.
- Observer, and possibly proxy, identification could be operationally difficult to implement.
- There are no Federal legislative requirements for information about the multiracial population.

6.1.1.2 Findings Concerning Different Formats for Reporting More Than One Race

Multiracial Category

- Definitions and terminology for the category would have to be generally understood and accepted by the public.
- Persons may identify with two or more races, but may not choose to respond as ''multiracial.''
- Using a multiracial category with a write-in would take up little space but require more coding.
- Using a multiracial category with a follow-up question specifying races would take up more space but require less coding.
- A multiracial category with a write-in works well for self-administered data collections but would not be appropriate for interviewer-administered surveys, which would need a follow-up question.
- Multiracial is sometimes misinterpreted by respondents as also meaning multiethnic.
- The presence of a multiracial category may affect reporting by Hispanics on the Hispanic origin question.

Select One or More Races

- Only one question is needed.
- With fewer write-ins, less coding is required.
- It is not necessary to select terminology and develop a definition if a ''multiracial'' category is not being added.
- Instructions would be needed, and their wording would be extremely important.
- Some respondents already select more than one race even when asked to mark only one.
- Tabulating a multiple response option may be more straightforward and consistent across Federal agencies than tabulating write-in responses would be.

An ''Other'' Category With Examples That Include Multiracial

- Public comment indicated that an ''Other'' category is offensive to some respondents.
- A greater amount of coding of responses would be required.
- Multiracial individuals will not be able to express adequately their own identity.
- A smaller proportion of respondents may report ''other'' compared with the other options for reporting more than one race.

6.1.2 Recommendations Concerning a Combined Race and Hispanic Ethnicity Question

- *When self-identification is used, the two question format should be used, with the race question allowing the reporting of more than one race.*
- *When self-identification is not feasible or appropriate, a combined question can be used and should include a separate Hispanic category co-equal with the other categories.*
- *When the combined question is used, an attempt should be made, when appropriate, to record ethnicity and race or multiple races, but the option to indicate only one category is acceptable.*

The two question format allows Hispanics both to identify as Hispanic and to provide information about their race. It provides a complete distribution simply and continuity with past data is more likely to be maintained. Data on Hispanic subgroups can be obtained more easily with this format. The two question format should be used in all cases involving self-identification. When self-identification is not possible (e.g., the respondent is incapacitated), a combined format could be used. The recording of both Hispanic ethnicity and a race should be encouraged. The recording of only one identification, however, should be left as an option.

6.1.2.1 Findings Concerning Whether Race and Hispanic Origin Should Be Combined Into a Single Question

Findings favoring a single question:

- Respondents may not confront what they may consider to be redundant questions.
- The concepts of ''race'' and ''ethnicity'' are difficult to separate.
- Reporting by Hispanics in the ''Other'' race category may be reduced.
- Some Hispanics and data users have expressed support for a combined question.
- The number of respondents using write-ins for the race question may be reduced.
- Inconsistencies in Hispanic reporting may be reduced.
- Self-identification for Hispanics may be enhanced.

Findings not favoring a single question:

- Some Hispanics want to identify their race in addition to Hispanic origin.
- Some Hispanics, including the Census Hispanic Advisory Committee and most Hispanic organizations, oppose a single, combined question.
- ''Hispanic'' is not considered a race by some respondents and users.
- The reporting of Hispanic subgroups will be awkward with a single question.
- A single, combined question may have a differential effect on reporting by Hispanic subgroups.
- A single, combined question will increase the need for additional tabulations as a result of multiple responses.
- Time series and other analyses will have to account for the change.
- The historical continuity of economic or demographic statistics for Hispanics may be affected.
- Additional tabulations may be needed for administrative reporting, and this might infringe on self-identification.

6.1.2.2 Findings Concerning Different Formats if Race and Hispanic Origin are Combined in a Single Question

A combination of race, ethnicity, and ancestry:

- More responses will need to be coded and edited.
- Some Hispanic respondents may not provide subgroup detail, reducing the counts of specific subgroups and increasing the ''other Hispanic'' group.
- Ancestry would be collected for the entire population on every data collection and not just the Census long form, but the distribution may change from that with a separate ancestry question.
- The question may be too difficult for some respondents.

A question with an Hispanic category allowing multiple responses:

- Only a single question is needed.
- Hispanic origin would be a category co-equal with race.
- Some Hispanics prefer to indicate both their Hispanic origin and race.

A question with an Hispanic category allowing only one response:

- The count of Hispanics may be reduced, since some Hispanics may select a category other than Hispanic.
- Hispanic origin would be co-equal with race.
- Observer and proxy identification could be more difficult.
- For those reporting Hispanic, no race is obtained.

6.1.3 Recommendations Concerning the Retention of Both Reporting Formats

- *The two question format should be used in all cases involving self-identification.*
- *The current combined question format should be replaced with a combined format which includes a co-equal Hispanic category for use, if necessary, in observer identification.*

The two question format for collecting data on Hispanic origin and race is considered superior to the single question format, and it should be used in all cases involving self-identification. The single question format should only be used where self-identification is not possible. In these cases, a single question in the form of the combined question discussed above can be used, but, again, data collectors should be strongly encouraged to record both ethnicity and race to provide more complete information about the individual. Attempts to obtain proxy responses (from family or friends) as opposed to using observer identification also should be encouraged in order to promote data accuracy.

Findings favoring retention:

- Both formats are being used by Federal agencies; a number of large administrative data bases use the combined format.
- Some data collection instruments and procedures as well as processing systems currently being used will have to change if only one format is retained.
- Time series and other analyses would have to account for the change.

Findings not favoring retention:

- The two formats do not produce comparable data.
- The combined format allowed in Directive 15 does not produce a

complete distribution of Hispanic origin by race.

6.1.4 Recommendation Concerning the Ordering of the Hispanic Origin and Race Questions

• *When the two questions format is used, the Hispanic origin question should precede the race question.*

All research findings point to placing the Hispanic origin question before the race question. Hispanics appear less confused by the race question and do not select the ''Other'' race category as often when this sequencing is used. This reduces the amount of data editing and coding needed. Furthermore, non-Hispanics are more likely to give a response to the Hispanic origin question.

Findings favoring the race question appearing first:

• Current time series or other analyses would have to take account of a change in question sequencing.
• Even if the Hispanic origin question were to appear first, some Hispanic respondents will not answer the race question or will select ''Other'' race in the decennial census.

Findings favoring the Hispanic origin question appearing first:

• The meaning of the race question will be clearer, especially to Hispanics.
• Non-Hispanics will be more likely to give a response to the Hispanic origin question.
• Data editing and coding should be reduced.

6.1.5 Recommendation Concerning Adding Cape Verdean as an Ethnic Category

• *A Cape Verdean ethnic category should not be added to the minimum data collection standards.*

Given the small size and geographic concentration of this population, the analytical power gained by a separate identification at the national level would be minimal compared to the costs, especially for sample surveys. Even without a separate category, however, the ability to report more than one race may allow Cape Verdeans to express their identity. An ancestry question would allow Cape Verdeans to identify themselves for the purposes of estimating population size. States with a significant Cape Verdean population can collect data for state and local purposes.

Findings favoring the addition of a Cape Verdean ethnic category:

• It would respond to complaints that discrimination against Cape Verdeans is difficult to assess without a separate category for data on this population.
• Cape Verdean is easily defined.
• Some Cape Verdeans favor the addition of the category.
• Data may be useful for administering some state and local programs.
• The number of write-ins in an ''Other'' category may be reduced.
• The principle of self-identification would be supported.
• The picture of society would be more complete.

Findings not favoring a Cape Verdean ethnic category:

• This population is concentrated in certain states that could collect data at the local level.
• There is no specific Federal requirement for information about Cape Verdeans.
• Little research has been done on the effects of adding Cape Verdean to the list of ethnic categories.
• Time series and other analyses would have to account for the change.
• Cape Verdeans could be accommodated if the reporting of more than one race were allowed, although additional tabulations would be needed.
• The ancestry question on the decennial census provides an opportunity for individuals to identify their Cape Verdean ancestry.

6.1.6 Recommendation Concerning the Addition of an Arab or Middle Eastern Ethnic Category

• *An Arab or Middle Eastern ethnic category should not be added to the minimum data standards.*

The definition of Arab or Middle Eastern ethnicity is problematic. At least three approaches—linguistic, geographic, and religious—have been proposed. More space would be needed on questionnaires, and Arab or Middle Eastern ethnicity can be obtained from an ancestry question. States with a significant Arab or Middle Eastern population can collect data for state and local purposes. Given the small size and geographic concentration of this population, the analytical power gained by a separate identification at the national level would be minimal compared to the costs, especially for sample surveys.

Findings favoring the addition of an Arab or Middle Eastern ethnic category:

• It would respond to complaints that discrimination against Arabs or persons from the Middle East is difficult to assess without a separate ethnic category.
• Some Arabs or Middle Easterners favor a separate ethnic identification.
• It may address the difficulty some Arabs or Middle Easterners have in responding to the race question.
• Data may be useful for administering some state and local programs.
• The number of write-ins for an ''Other'' category may be reduced.
• The principle of self-identification would be supported.
• The picture of society would be more complete.
• Arabs and Middle Easterners are racially mixed and, hence, similar conceptually to the Hispanic community.

Findings not favoring the addition of an Arab or Middle Eastern ethnic category:

• An Arab or Middle Eastern ethnicity is difficult to define.
• States having concerntations of Arabs or Middle Easterners could collect data at the local level.
• An Arab or Middle Eastern ethnicity question would require more space.
• There are no Federal requirements for information about Arabs or those from the Middle East.
• Little research has been done on the effects of adding an Arab or Middle Eastern ethnic category.
• Time series or other analyses would have to account for the change.
• Arab or Middle Eastern ethnicity can be obtained with an ancestry question on the decennial census.

6.1.7 Recommendation Concerning the Addition for Any Other Categories to the Minimum Set

• *No other racial or ethnic categories should be added to the minimum set of categories.*

Additional racial and ethnic categories would require more space with little analytical value added. States can collect data at the state and local level for groups concentrated in their areas. The current Directive permits the collection of this greater detail. Some of these groups would be accommodated by allowing the reporting at the Federal level of more than one race. Given the small size and geographic concentration of these populations, the analytical power gained by a separate identification at the national level would be minimal compared to the costs, especially for sample surveys.

Findings favoring the addition of other categories:

• Such an addition would respond to complaints that discrimination cannot be assessed without separate categories.
• Some states and local areas have diverse populations and need additional detail for administrative purposes.

• The picture of society would be more complete.
• Some groups favor the creation of their own categories.
• The number of write-ins in an ''Other'' category may be reduced.
• The principle of self-identification would be supported.

Findings not favoring the addition of other categories:

• There are no specific Federal requirements for information on other population groups.
• States having concentrations of certain population groups could collect data at the local level to meet their requirements.
• Little research has been done on the effects of additional categories.
• A long list would require more space on all data collection instruments, not just the decennial census forms.
• Time series and other analyses would have to account for the change.
• Some of these categories would be accommodated by allowing the reporting of more than one race.
• The current Directive permits the collection of more detailed data on population groups, provided the detail can be aggregated into the minimum set of categories.

6.1.8 Recommendation Concerning Changing the Term ''American Indian'' to ''Native American''

• *The term American Indian should not be changed to Native American.*

The term ''Native American'' may confuse those born in the United States, and the count of American Indians may become less accurate. ''Native American'' is a term which could include more than American Indians. American Indians are divided on which term they prefer, but most tribal organizations prefer ''American Indian.''

Findings favoring the change:

• Some find the term to be a more accurate description of this indigenous population.
• Some American Indians expressed a preference for the term ''Native American.''

Findings not favoring the change:

• American Indian tribal governments prefer to retain the term ''American Indian.''
• The term ''Native American'' often is interpreted by respondents to mean ''born in this country.''
• The accuracy of the counts of American Indians may be affected by a change in terminology.
• Time series and other analyses would have to account for the change in terminology.
• ''Native American'' is confusing, since it refers to groups other than American Indians.

6.1.9 Recommendation Concerning Changing the Term ''Hawaiian'' to ''Native Hawaiian''

• *The term ''Hawaiian'' should be changed to ''Native Hawaiian.''*

Although the term ''Native Hawaiian'' may be misinterpreted by respondents to mean ''born in Hawaii,'' there is little evidence to suggest this would be as likely as in the case of ''Native American.'' Furthermore, the preponderance of the public comments on this issue favored using ''Native Hawaiian.''

Findings favoring the change:

• Hawaiians are an indigenous people to what is now the United States.
• Public comment indicated a preference for the use of the term ''Native Hawaiian.''
• The review found no compelling evidence that counts of this group would be affected.

Findings not favoring the change:

• ''Native Hawaiian'' may be misinterpreted by respondents to mean ''born in Hawaii.''
• The accuracy of counts of Hawaiians may be affected.
• Time series and other analyses could have to take account of the change.
• Some research findings indicated that more Hawaiians appear to prefer ''Hawaiian'' to ''Native Hawaiian,'' but both were acceptable terms.

6.1.10 Recommendation Concerning the Classification of Hawaiians

• *Hawaiians should continue to be classified in the Asian or Pacific Islander category.*

Although Hawaiians are an indigenous people, they are geographically linked to other Pacific Islanders. Furthermore, other groups, such as the American Samoans and the Guamanians, requested a similar change, with the result that the meaning of the Pacific Islander classification would likely be affected. Hawaiians are divided on which classification should be used. The historical continuity of data on the economic characteristics of Pacific Islanders would be affected.

Findings favoring classification with other indigenous populations

• Hawaiians are an indigenous people.
• Like Alaska, and unlike American Samoa or Guam, Hawaii is a state.
• Hawaiians account for approximately ten percent of the indigenous population of the United States.
• Some Hawaiians favor classification in the same category as the American Indians and Alaska Natives.

Findings favoring continued classification as Asian/Pacific Islander

• Geographically, Hawaiians should be classified with other Pacific Islanders:
• Time series and other analyses would not have to account for the change in classification.
• The administration of Federal programs for the indigenous population might be affected by the change.
• Other groups, such as the Samoans and the Guamanians, also have requested reclassification out of the Asian/Pacific Islander category. These changes, along with a change for Hawaiians, would effectively eliminate the Pacific Islander category.
• The historical continuity of economic and demographic statistics for Pacific Islanders as well as American Indians could be affected by a change in classification.
• American Indian tribal governments are opposed to the change, because it might affect the quality of the data for American Indians.
• There appears to be no clear preference on the part of Hawaiians—some Hawaiians favor classification in the American Indian category, and still others favor a separate Native Hawaiian category.
• Except for the proportion of college graduates, Hawaiians resemble Asians more than American Indians in terms of economic status.

6.1.11 Recommendations Concerning the Use of Alaska Native Instead of Eskimo and Aleut

• *''Alaska Native'' should replace the term ''Alaskan Native.''*
• *Alaska Native should be used instead of Eskimo and Aleut.*
• *The Alaska Native response option should be accompanied by a request for tribal affiliation when possible.*

''Alaska Native'' is the term preferred by this population (as compared to ''Alaskan Native''). Alaska Native, accompanied by a request for tribal affiliation, provides more accurate and complete data.

Findings favoring the use of Alaska Native:

• The term ''Eskimo'' is offensive to some respondents.
• Alaska Native, accompanied by a request for tribal affiliation, provides more accurate data for administrative purposes.

• ''Alaska Native'' is the term preferred by this population.

Findings not favoring the use of Alaska Native:

• The terms ''Eskimo'' and ''Aleut'' are acceptable to most Alaska Natives.

6.1.12 Recommendations Concerning the Classification of South and Central American Indians

• *South and Central American Indians should be classified as American Indian.*

• *The definition of the ''American Indian or Alaska Native'' category should be modified to include the original peoples from South and Central America.*

The classification of South and Central American Indians as American Indian is consistent with how the Canadian Indians are classified, but the definition of the category would need to be changed accordingly. While the effects on the count of American Indians will be minimal, South and Central American Indians may find it easier to answer the race question.

Findings favoring a more inclusive American Indian classification:

• Classification in the American Indian category would be consistent with how the Canadian Indians in the United States have been classified using the current categories.

• The consistency of the classification of American Indians will be increased.

• It would be easier for South and Central American Indians to answer the race question.

• The effects of this change on the population count and other data on American Indians will be minimal.

• Some South and Central American Indians may prefer being classified as American Indian.

Findings not favoring a more inclusive American Indian classification:

• Little research has been done on the potential effects of changes.

• Some South and Central American Indians may prefer being classified as White.

• The reclassification may have a small effect the administration of Federal programs for American Indians.

6.1.13 Recommendations Concerning the Term or Terms To Be Used for the Name of the Black Category

• *The name of the Black category should be changed to ''Black or African American.''*

• *The category definition should remain unchanged.*

• *Additional terms, such as Haitian or Negro, can be used if desired.*

Substantial numbers of this population identify with one of the two terms, Black and African-American. If the two terms are connected by an ''or,'' Caribbean Blacks can identify with the category. Other terms, such as ''Negro'' and ''Haitian,'' can be used, but they should not be required. Since a relatively small number of Blacks identify with ''Negro'' and ''Haitian,'' the term ''Black or African American'' is likely to be sufficient.

Findings favoring using ''Black'':

• Time series and other analyses will be unaffected.

• A plurality of Blacks prefer this term.

• This term does not cause much confusion for respondents, such as Caribbean Blacks.

• For most Blacks, it is not an offensive term.

• Some respondents find ''African-American'' a confusing term because the term could exclude Caribbean Blacks or include anyone from Africa, including Whites.

• Some public comment indicated an objection to the use of ''American'' in ''African-American,'' because it connotes nationality and is not used in the names of the other categories, except for the American Indian category.

Findings favoring using ''African American'' or ''Afro-American'':

• A large proportion of Blacks favor one of these terms.

• For most Blacks, these are not offensive terms.

• The terms are commonly used and there seems to be a general consensus about the population group in the United States for which the term is intended.

Findings favoring another term:

• ''Negro'' may be favored by older Blacks.

• ''Colored'' may be favored by some Blacks in the South.

Findings favoring use of more than one term:

• Using more than one term is more inclusive and could achieve more complete coverage of the Black population.

• Nonresponse to the race question among Blacks may be reduced.

• Write-ins are less likely.

6.1.14 Recommendations Concerning the Term or Terms To Be Used for Hispanic

• *The term used should be ''Hispanic.''*

• *The definition of the category should remain unchanged.*

• *Additional terms, such as Latino or Spanish Origin, can be used if desired.*

A majority of Hispanics prefer the ''Hispanic'' term. ''Hispanic'' is a term with which most of this population is now familiar. Other terms, such as ''Latino'' or ''Spanish Origin,'' can be used to achieve more complete coverage of the Hispanic population. There is some evidence, however, that using the term ''Latino'' may result in the inclusion of some unintended population groups, so it should not be a part of the minimum standard.

Findings favoring using Hispanic:

• A majority of Hispanics favor this term.

• Time series and other analyses are likely to be unaffected.

• Most Hispanics are familiar with this term.

• The inclusion of other terms, such as ''Latino,'' might have the effect of including unintended population groups.

Findings favoring using the term ''Latino'':

• Some Hispanics favor this term.

• Some Hispanics are more familiar with this term than with ''Hispanic'' or other terms.

Findings favoring using the term ''Spanish Origin'':

• Some respondents of Spanish or European descent prefer this term.

• Some Hispanics may be more familiar with this term than with other terms.

Findings favoring another term:

• The term ''Chicano'' may be favored by Hispanics in the Southwest region of the United States.

Findings favoring use of more than one term:

• Nonresponse of Hispanics to the Hispanic ethnicity question may be reduced.

6.2 Comparison of the Current Standards With the Recommended Standards

This section summarizes the differences between Directive No. 15 and the recommended changes. The current standards are presented in Section 6.2.1. Section 6.2.2 shows how the current standards would be changed if the recommendations were to be adopted by the Office of Management and Budget. In the latter case, the Interagency Committee's recommended changes are presented in **bold** type so that they can be more readily compared to the current standards.

6.2.1 The Current Standards in Directive No. 15

The basic racial and ethnic categories for Federal statistics and program administrative reporting are defined as follows:

a. *American Indian or Alaskan Native.* A person having origins in any of the original peoples of North America, and who maintains cultural identification through tribal affiliation or community recognition.

b. *Asian or Pacific Islander.* A person having origins in any of the original peoples of the Far East, Southeast Asia, the Indian subcontinent, or the Pacific Islands. This area includes, for example, China, India, Japan, Korea, the Philippine Islands, and Samoa.

c. *Black.* A person having origins in any of the black racial groups of Africa.

d. *Hispanic.* A person of Mexican, Puerto Rican, Cuban, Central or South American or other Spanish culture or origin, regardless of race.

e. *White.* A person having origins in any of the original peoples of Europe, North Africa, or the Middle East.

To provide flexibility, it is preferable to collect data on race and ethnicity separately. If separate race and ethnic categories are used, the minimum designations are:

Race:

—American Indian or Alaskan Native
—Asian or Pacific Islander
—Black
—White

Ethnicity:

—Hispanic origin
—Not of Hispanic origin

When race and ethnicity are collected separately, the number of White and Black persons who are Hispanic must be identifiable, and capable of being reported in that category.

If a combined format is used to collect racial and ethnic data, the minimum acceptable categories are:

American Indian or Alaskan Native
Asian or Pacific Islander
Black, not of Hispanic origin
Hispanic
White, not of Hispanic origin

The category which most closely reflects the individual's recognition in his community should be used for purposes of reporting on persons who are of mixed racial and/or ethnic origins.

In no case should the provisions of this Directive be construed to limit the collection of data to the categories described above. However, any reporting required which uses more detail shall be organized in such a way that the additional categories can be aggregated into these basic racial/ethnic categories.

6.2.2 Recommended Standards

The **minimum categories for data on race and ethnicity** for Federal statistics and program administrative reporting are defined as follows:

a. *American Indian or* **Alaska** *Native.* A person having origins in any of the original peoples of North **and South America (including Central America),** and who maintains cultural identification through tribal affiliation or community recognition.

b. *Asian or Pacific Islander.* A person having origins in any of the original peoples of the Far East, Southeast Asia, the Indian subcontinent, or the Pacific Islands. This area includes, for example, China, India, Japan, Korea, the Philippine Islands, **Hawaii,** and Samoa.

c. *Black* **or African-American.** A person having origins in any of the black racial groups of Africa.

d. *Hispanic.* A person of Mexican, Puerto Rican, Cuban, Central or South American or other Spanish culture or origin, regardless of race.

e. *White.* A person having origins in any of the original peoples of Europe, North Africa, or the Middle East.

To provide flexibility **and assure data quality,** it is preferable to collect data on race and ethnicity separately. **When race and ethnicity are collected separately, ethnicity should be collected first. Persons of mixed racial origins can, but are not required to, report more than one race.** If **race and ethnicity are collected separately,** the minimum designations are:

a. *Race:*

—American Indian or **Alaska** Native
—Asia or Pacific Islander
—Black **or African-American**
—White

b. *Ethnicity:*

—Hispanic origin
—Not of Hispanic origin

When the data are reported, a minimum of one additional racial category, designated "More than one race," must be included, if the criteria for data quality and confidentiality are met, in order to report the aggregate number of multiple race responses. Data producers are encouraged to provide greater detail about the distribution of multiple responses. Terms such as "Haitian" or "Negro" can be used in addition to "Black" and "African-American." Terms such as "Latino" or "Spanish origin" can be used in addition to "Hispanic."

If a combined format **must be** used to collect racial and ethnic data, **both race and ethnicity or multiple races should be collected when appropriate, although the selection of one category will be acceptable. If a combined format is used, the minimum categories are:**

—American Indian or **Alaska** Native
—Asian or Pacific Islander
—Black **or African-American**
—Hispanic
—White

When the data are reported, a minimum of two additional categories, designated "Hispanic and one or more races" and "More than one race," must be included if the criteria for data quality and confidentiality are met and both race and ethnicity and multiple races were collected.

In no case should the provisions of this Directive be construed to limit the collection of data to the categories described above. **In fact, the collection of subgroup detail is encouraged.** However, any reporting required which uses more detail shall be organized in such a way that the additional categories can be aggregated into these **minimum** categories for data on race and ethnicity.

6.3 Recommendations for Further Research

A great deal of research has been conducted over the past few years to provide information on which to base possible revisions to Directive No. 15. More research still is needed. Most immediately, research should be conducted by the affected agencies both to evaluate the effects of the proposed changes and to consider methods for accommodating them. A phased implementation period of up to five years has been proposed to allow agencies to make changes in data collection instruments and procedures, as well as in processing and tabulation systems. To assist the agencies, OMB should issue guidelines on data tabulation and reporting, instructions for interviewers, and suggested wording for questions by January 1, 1999.

Tabulation methods are particularly important in the case of reporting more than one race, and Federal and state agencies are encouraged to work together, under the auspices of OMB, to develop methods that would produce consistent results for program purposes and for comparisons with historical data. These guidelines would be particularly useful for those charged with civil rights enforcement. In addition, much thought should be given to the appropriate way to tabulate multiple responses for official purposes. Because instructions can have a

profound effect on data quality, instructions for respondents and interviewers that will effectively communicate the intention of the race and Hispanic origin questions should be developed. Other aspects of questionnaire design, including question wording, also should be addressed by the guidelines.

Some important issues have not been resolved during this period of review and a number of questions are left unanswered. For example, conceptual bases for defining Arab or Middle Eastern ethnicity should be explored. The differences between the concepts of ''race,'' ''ethnicity,'' and ''ancestry'' have not been satisfactorily determined. More intensive study of small populations such as Hawaiians, Cape Verdeans, and Creoles should be undertaken. In many cases, this work would have to be done in local areas where these population groups are concentrated. In the future, there will be the opportunity to examine why some people choose to select more than one race while others, with the same characteristics, do not. Also, more research is needed on inconsistencies in reporting race and ethnicity over time. More thought should be given to the current use of geographic origin in the definition of racial categories. Building on considerable progress the Census Bureau has made, the search for a single question that satisfactorily captures both race and ethnicity should be continued.

References

Almey, M., Pryor, E.T., and White, P.M. (1992), ''National Census Measures of Ethnicity in the Americas,'' in *Proceedings of the International Union for the Scientific Study of Populations' Conference on ''The Peopling of the Americas,''* Vera Cruz, Mexico, Vol. 3, pp. 5–22.

Bates, N. (1991), ''The 1990 alternative questionnaire experiment: Preliminary report of the 100-percent items,'' Paper written for the 1990 Decennial Census.

Bates, N., Martin, E.A., DeMaio, T.J., and de la Puente, M. (1996) ''Questionnaire Effects on Measurements of Race and Spanish Origin,'' *Journal of Official Statistics,* Vol. 11, pages 433–459.

Bates, N., de la Puente, M., DeMaio, T.J., and Martin, E.A. (1994), ''Research on Race and Ethnicity: Results from Questionnaire Design Tests,'' Paper presented at the Census Bureau's Annual Research Conference, Rosslyn, VA.

Bennett, C., McKenney, N., and Harrison, R. (1995), ''Racial Classification Issues Concerning Children in Mixed-Race Households,'' paper presented at the Annual Meeting of the Population Association of America, San Francisco, California.

Billingsly, A. (1993), *Climbing Jacob's Ladder: The enduring Legacy of African-American Families,* New York: Simon & Schuster.

Blackburn-Moreno R. (1994), Letter from ASPIRA Assoc. Inc. to OMB.

Bracken, K., and de Bango, G. (1992), ''Hispanics in a racially and ethnically mixed neighborhood in the greater metropolitan New Orleans area,'' Ethnographic evaluation of the 1990 decennial Census report #16, Prepared under Joint Statistical Agreement 89–45 with Hispanidad '87, Inc, Bureau of the Census, Washington D.C.

Bureau of the Census (1997), ''Results of the 1996 Race and Ethnic Targeted Test,'' Staff in Population Division and Decennial Statistical Studies Division, *Population Division Working Paper No. 18.*

Bureau of the Census (1996), ''Findings on Questions on Race And Hispanic Origin Tested in the 1996 National Content Survey,'' *Population Division Working Paper No. 16.*

Bureau of the Census (1995), *Statistical Abstract of the United States: 1995* (115th edition) Washington, D.C. 1995.

Bureau of the Census, *Ancestry of the Population in the United States,* 1990 CP–3–2.

Bureau of the Census, *Detailed Ancestry Groups for States,* 1990 CP–S–1–2.

Bureau of the Census, *American Indian Population by Tribe, for the United States, Regions, Divisions, and States: 1990,* 1990 CPH–L–99

Bureau of the Census (1988), ''Assessment of Implications of Listing Asian and Pacific Islander Groups in the 1990 Census Race Item,'' August 19.

Bureau of the Census (1988), ''Issue Paper on the 1990 Census Race Question,'' November 10.

Bureau of the Census (1988), ''Minutes and Report of Committee Recommendations, Census Advisory Committee of the American Indian and Alaska Native, Asian and Pacific Islander, Black and Hispanic Populations for the 1990 Census,'' April 21.

Bureau of the Census (1982), *Persons of Spanish origin by State: 1980,* U.S. Department of Commerce, Bureau of the Census (PC80–1–7).

Campbell, J.R., Donahue, P., Reese, C., and Phillips, G. (1966), ''NAEP 1994 Reading Report Card for the Nation and the States: Findings from the National Assessment of Educational Progress and Trial state Assessment,'' Office of Educational Research and Improvement, U.S. Department of Education.

Cantor, D., Kerwin, J., and Schecter, S. (1966), ''Evaluation of changes to the race question on birth certificates.'' *Proceedings of the Section on Survey Research Methods, American Statistical Association.*

Carbo, 1994. Testimony by MALDEF to the Office of Management and Budget, Public Hearings on Standards for the Classification of Federal Data on Race and Testimony.

Carter-Pokras, O., and LaVeist, T. (1996), ''Research and Politics: The Classification of Multiracial Persons,'' paper presented at the American Public Health Association, New York.

Crews, D.E., and Bindon, J.R. (1991), ''Ethnicity as a taxonomic tool in biomedical and biosocial research,'' *Ethnicity and Disease,* 1:42–49.

Denton, N.A., and Massey, D.S. (1989), ''Racial identity among Caribbean Hispanics: The effect of double minority status on residential segregation,'' American Sociological Review, 54, 790–808.

Department of Health and Human Services (1995), *Directory of Minority Health and Human Services Data Resources,* September.

Drury, T.F., Moy, C.S., and Poe, G.S. (1980), ''Going beyond interviewer observations of race in the National Health Survey,'' in *Classification Issues in Measuring the Health Status of Minorities,* Hyattsville, MD: U.S. Public Health Service, NCHS.

Duncan, G.J., Hill, M.S., Lepkowski, J., Garza, R.G., Falcon, A., Garcia, C., and Garcia, J. (1992), *Panel Study of Income Dynamics,* 1968–1990 (*Latino Sample, 1990*). (Computer file) Ann Arbor, MI: Survey Research Center (producer) Ann Arbor, MI: Consortium for Political and Social Research (distributor).

Elias-Olivares, L. and Farr, M. (1991), ''Sociolinguistic Analysis of Mexican-American Patterns of Non-Response to Census Questionnaires,'' Ethnographic Exploratory Research, Report #16. Center for Survey Methods Research, Bureau of the Census, Washington DC.

Falcon A. (1994), ''Puerto Ricans and the politics of racial identity,'' in *The Psychological development and creative expression of racial and ethnic identity,* eds. Harris H., Griffith E., Blue H., New York: Routledge.

Farley, R. (1993), ''Questions about race, Spanish origin and ancestry: Findings from the Census of 1990 and proposals for the census of 2000,'' Testimony at hearings of the Subcommittee on Census, Statistics and Postal Personnel, House of Representatives, April 14.

Federal Register Notice (1995) ''Standards for the Classification of Federal Data on Race and Ethnicity,'' Office of Management and Budget, **Federal Register**, 60 FR 44674–44693, August 28, 1995.

Fernandez, E.W. (1996), ''Comparisons of Selected Social and Economic Characteristics Between Asians, Hawaiians, Pacific Islanders, and American Indians (including Alaskan Natives),'' *Population Division Working Paper No. 15,* U.S. Bureau of the Census.

General Accounting Office (1993), *Census Reform: Early Outreach and Decisions Needed on Race and Ethnic Questions,* GAO Report GGD–93–96.

Gerber, E., and de la Puente, M. (1996), ''The Development and Cognitive Testing of Race and Ethnic Origin Questions for the Year 2000 Decennial Census,'' *Proceedings of the Bureau of the Census 1996 Annual Research Conference,* Arlington, Virginia.

Gimenez, M.E. (1989), ''Latino/Hispanic—who needs a name? The case against a standardized terminology,'' *International Journal of Health Services,* 19, 557–571.

Ginorio, A. (1979), ''A comparison of Puerto Ricans in New York with native Puerto Ricans and Native Americans on two measures of acculturation: gender roles and racial identification,'' Doctoral dissertation, Fordham University, New York, NY.

Ginorio, A., and Berry, P.C. (1972), ''Measuring Puerto Ricans' perceptions of racial characteristics,'' (Summary) *Proceedings of the 80th Annual Convention of the American Psychological Association,* 7:287–288.

Hahn, R.A. (1994), ''The coding of race and ethnicity in federal health statistics; problems and prospects,'' paper presented at a Workshop on Race and Ethnicity Classification: An Assessment of the Federal Standard for Race and Ethnicity Classification, National Research Council, Washington, DC, Feb. 17–18.

Hahn, R.A. (1992), ''The State of Federal Health Statistics on Racial and Ethnic Groups,'' *The Journal of American Medical Association,* 267, 268–271.

Hahn, R., Mulinare, J., and Teutsch, S. (1992), ''Inconsistencies in Coding of Race and Ethnicity Between Birth and Death; A New Look at Infant Mortality in the United States 1983–1985,'' *Journal of American Medical Association,* 267:259–63.

Hahn, R.A., Truman, B.I. and Barker, N.D. (1996), ''Identifying ancestry: The reliability of ancestral identification in the United States by self, proxy, interviewer, and funeral director,'' *Epidemiology,* 7, 75–80.

Harris, M., Consorte, G., Josildeth, L., Joseph, Byrne, B. (1993), ''Who are the Whites? Imposed Census categories and the racial demography of Brazil,'' *Social Forces;* 72(2), 451–462.

Hayes-Bautista, D.E., and Chapa, J. (1987), ''Latino terminology: Conceptual bias for standard terminology,'' *American Journal of Public Health,* 77, 61–68.

Hazuda, H.F., Comeaux, P.H., Stern, M.P., Haffner, S.M., Eifler, C.W., and Rosenthal, M.A. (1986), ''A comparison of three indicators for identifying Mexican Americans in epidemiologic research; Methodological findings from the San Antonio Heart Study,'' *American Journal of Epidemiology,* 123, 96–112.

Johnson, T., Jobe, J.B., O'Rourke, D., Sudman, S., Warnecke, R.B., Chavez, N., and Golden, P. (1995), ''Racial and ethnic self-identification in birth certification,'' paper presented at the American Sociological Association, Washington DC.

Kamasaki C. (1994), ''An Hispanic assessment of the Federal standard for race and ethnicity,'' paper presented at the Workshop on Race and Ethnicity Classification: An Assessment of the Federal Standard for Race and Ethnicity. Committee on National Statistics, Washington.

Kissam, E., Herrera, E., and Nakamoto, J.M. (1993), ''Hispanic responses to Census enumeration forms and procedures,'' Report prepared for the Bureau of the Census, Suitland, MD.

Kleinman, J.C. (1990), ''Infant mortality among racial/ethnic minority groups,'' *Morbidity and Mortality Weekly Report CDC Surveillance Summary,* 39 (3), 31–39.

Lavrakas, P.J., Schejbal, J.A., and Smith, T.W. (1994), ''The use and perception of ethnoracial labels: 'African-American' and/or 'Black,' '' *Proceedings of the 1994 Annual Research Conference.* 505–515.

Levin, M.J. (1995), ''Report on Focus Group Research for Race Item for the 2000 Census: Guamanian Versus Chamorro (or Both),'' Report prepared for the Bureau of the Census, Suitland, MD.

Lindan, C.P., Hearst, N., Singleton, J.A., Trachtenberg, A.I., Riordan, N.M., Tokagawa, D.A., and Chu, G.S. (1990), ''Underreporting of Minority AIDS Deaths in San Franciso Bay Area, 1985–86,'' *Public Health Reports* 105(4), 400–404.

Martin, E., DeMaio, T.J., and Campanelli, P.C. (1990), ''Statement on cognitive research. director of the Center for Survey Methods Research. U.S. Bureau of the Census,'' Workshop on Race and Ethnicity Classification: An Assessment of the Federal standard for race and ethnicity classification. Committee on National Statistics. National Research Council. Washington DC, 1994.

Martinez, A.R. (1998), ''The effects of acculturation and racial identity on self-esteem and psychological well-being among young Puerto Ricans,'' Ph.D. Dissertation. City University of New York.

Massey, J.T. (1980), ''A Comparison of Interviewer Observed Race and Respondent Reported Race in the National Health Interview Survey,'' paper presented at Annual Meeting of the American Statistical Association. Houston, Texas.

McKenney, N. and Cresce A. (1992). ''Measurement of Ethnicity in the United States: Experiences of the U.S. Census Bureau.'' Published in the *Proceedings of the Joint Canada-United States Conference on the Measurement of Ethnicity,* pages 173–222.

McKenney, N.R., Bennett, C.E., Harrison, B., and del Pinal, J. (1991), ''Evaluating racial and ethnic reporting in the 1990 Census,'' Washington, DC: U.S. Bureau of the Census.

McKay, R.B., and de la Puente, M. (1995), ''Cognitive Research in Designing the CPS Supplement on Race and Ethnicity,'' *Proceedings of the Bureau of the Census 1995 Annual Research Conference,* Rosslyn, Virginia 435–445.

McKay, R.B., Stinson, L.L., de la Puente, M. and Kojetin, B.A. (1996), ''Interpreting the Findings of the Statistical Analysis of the CPS Supplement on Race and Ethnicity,'' *Proceedings of the Bureau of the Census 1996 Annual Research Conference,* Rosslyn, Virginia 326–337.

National Center for Education Statistics, *Racial and Ethnic Classifications Used by Public Schools,* NCES 96–092, pp. 14–15.

National Council of La Raza (1995). Letter of the Office of Management and Budget.

National Research Council, Committee on National Statistics (1996), *Spotlight on Heterogeneity: The Federal Standards for Racial and Ethnic Classification (Summary of a Workshop),* National Academy Press, Washington, D.C.

Office of Management and Budget (1995), ''Standards for the Classification of Federal Data on Race and Ethnicity,'' **Federal Register**; 60:44674–44693, August 28, 1995.

Office of Management and Budget (1977), ''Race and Ethnic Standards for Federal Statistics and Administrative Reporting.''

Olguin F. (1994) Letter from the Mexican American Legal Defense and Educational Fund to OMB.

Poe, G.S., Powell-Griner, E., McLaughlin, J.K., Robinson, K., and Placek, J. (1993), ''A comparability study of the responses to the 1986 National Mortality Follow-back Survey to similar demographic items from the death certificate,'' US Department of Health and Human Services, Public Health Service, Centers for Disease Control and Prevention, National Center for Health Statistics, *Vital and Health Statistics, Data Evaluation and Methods Research, Series 2, No. 118.*

Rodriguez, C.E., (1994) ''Challenges and Emerging Issues: Race and Ethnic Identity Among Latinos,'' Committee on National Statistics, National Research Council, Washington, DC.

Rodriguez, C.E. (1992), ''Race, culture and Latino 'otherness' in the 1980 Census,'' *Social Science Quarterly, 71(4), 930–937.*

Rodriguez, C. (1989), *Puerto Ricans: Born in the USA,* Boston: Urwin and Hyman. (Reissued by Westview Press in Boulder, CO in 1991).

Rodriguez, C. (1974), ''Puerto Ricans: Between Black and White,'' *Journal of New York Affairs,* 1(4), 92–101.

Rodriguez, C.E., and Cordero-Guzman, J.M. (1992), ''Place race in context,'' *Ethnic Racial Studies,* 15, 523–43.

Rodriguez, N., and Hagan, J. (1991), ''Investigating Census coverage and content among undocumented: An ethnographic study of Latino immigrant tenants in Houston,'' Ethnographic evaluation of the 1990 Decennial Census Report #3, Prepared under Joint Statistical Agreement 89–34 with the University of Houston, Bureau of the Census, Washington D.C.

Romero, M. (1992), ''Ethnographic evaluation of behavioral causes of Census undercount of undocumented immigrants and Salvadorans in the Mission District of San Francisco, California,'' Ethnographic evaluation of the 1990 Decennial Census Report #18. Prepared under Joint Statistical Agreement 89–41 with the San Francisco State University Foundation, Bureau of the Census, Washington, D.C.

Scarr, H.A. (1994), Statement of Harry A. Scarr, Acting Director, Bureau of the Census. At the Hearings before the Subcommittee on Census, Statistics, and Postal Personnel of the Committee on Post Office and Civil Service, House of Representatives, 103 Congress, first Session, June 30, 1993, Serial No. 103–7, pp. 3–17.

Smith, T. (1992), ''Changing racial labels: From 'Colored' to 'Negro' to 'Black' to 'African American,' '' *Public Opinion Quarterly,* 56, 496–514.

Smith, T.W. (183), ''Problems in ethnic measurement: Over-, under- and misidentification,'' *Proceedings of American Statistical Association.*

Sorlie, P.D., Backlund, E., Johnson N.J., and Rogot, E. (1993), ''Mortality by Hispanic Status in the United States, ''*Journal of the American Medical Association* 270: 2464–68

Subcommittee on Census, Statistics and Postal Personnel of the Committee on Post Office and Civil Service, House of Representatives (1993), Hearings on Review of Federal Measurements of Race and Ethnicity.

Tienda, M., and Ortiz, V. (1986), ''Hispanicity and the 1980 Census,'' *Social Science Quarterly,* 67, 3–20.

Torres, J. (1996), ''Report Says Combining Race and Ethnicity in Census Lowers Latino Response,'' *Hispanic Link Weekly Report,* June 3, p. 4.

Trevino, F.M. (1987), ''Standardized terminology for Hispanic populations,'' *American Journal of Public Health,* 77, 69–72.

Tucker, C. (1996), ''Summary of Responses on Assessing Possible Changes in the Collection of Statistics on Race and Ethnicity,'' Survey of Council of Professional Association of Federal Statistics members.

Tucker, C. (1996), Summary of Focus Group with State and Local Association of Public Data Users Members.

Tucker, C., McKay, R., Kojetin, B., Harrison, R., de la Puente, M., Stinson, L., and Robinson, E. (1996), ''Testing methods of collecting racial and ethnic information: Results of the Current Population Survey Supplement on Race and Ethnicity,'' *Bureau of Labor Statistics Statistical Notes,* No. 40.

Tumin, M., Feldman, A. (1961), *Social class and social change in Puerto Rico,* Princeton: Princeton University Press.

Wong, F. Y., and McKay, D.R. (1992), ''Hispanic subgroups and intraracial comparisons (letter),'' *American Journal of Public Health,* 82 (12), 1691.

Wright, L. (1994), ''One Drop of Blood,'' *New Yorker,* 7/25/94, pp. 46–54.

Yzaguirre, R., and Perez, S.M. (1997), ''Accurate racial/ethnic data should drive category review,'' in *Double exposure: poverty and race in America,* eds. C. Hartman and M.E. Sharpe, Armonk, NY.

[FR Doc. 97–17664 Filed 7–8–97; 8:45 am]

BILLING CODE 3110–01–M

federal register

Wednesday
July 9, 1997

Part III

Environmental Protection Agency

40 CFR Part 60

Proposed Revision of Standards of Performance for Nitrogen Oxide Emissions From New Fossil-Fuel Fired Steam Generating Units; Proposed Revisions to Reporting Requirements for Standards of Performance for New Fossil-Fuel Fired Steam Generating Units; Proposed Rule

ENVIRONMENTAL PROTECTION AGENCY

40 CFR Part 60

[FRL–5854–5]

RIN–2060–AE56

Proposed Revision of Standards of Performance for Nitrogen Oxide Emissions From New Fossil-Fuel Fired Steam Generating Units; Proposed Revisions to Reporting Requirements for Standards of Performance for New Fossil-Fuel Fired Steam Generating Units

AGENCY: Environmental Protection Agency (EPA).

ACTION: Proposed revisions.

SUMMARY: Pursuant to section 407(c) of the Clean Air Act, the EPA has reviewed the emission standards for nitrogen oxides (NO_X) contained in the standards of performance for new electric utility steam generating units and industrial-commercial-institutional steam generating units. This document presents EPA's findings and proposes revisions to the existing NO_X standards.

The proposed changes to the existing standards for NO_X emissions reduce the numerical NO_X emission limits for both utility and industrial steam generating units to reflect the performance of best demonstrated technology. The proposal also changes the format of the revised NO_X emission limit for electric utility steam generating units to an output-based format to promote energy efficiency and pollution prevention.

As a separate activity, EPA has also reviewed the quarterly sulfur dioxide, NO_X, and opacity emission reporting requirements of the utility and industrial steam generating unit regulations contained in 40 CFR part 60, subpart Da and Db. This document proposes to allow owners or operators of affected facilities to meet the quarterly reporting requirements of both regulations by means of electronic reporting, in lieu of submitting written compliance reports.

DATES: *Comments.* Comments on the proposed revisions must be received on or before September 8, 1997.

Public Hearing. A public hearing will be held, if requested, to provide interested persons an opportunity for oral presentations of data, views, or arguments concerning the proposed revisions. If anyone contacts the EPA requesting to speak at a public hearing by July 30, 1997, a public hearing will be held on August 8, 1997 beginning at 9:00 a.m. The public hearing is only for the oral presentations of comments with the EPA asking clarifying questions. Persons interested in attending the hearing should call Ms. Donna Collins at (919) 541–5578 to verify that a hearing will occur.

Request to Speak at Hearing. Persons wishing to present oral testimony must contact EPA by July 30, 1997.

ADDRESSES: Interested parties may submit written comments (in duplicate if possible) to Public Docket No. A–92–71 at the following address: U.S. Environmental Protection Agency, Air and Radiation Docket and Information Center (6102), 401 M Street, S.W., Washington, D.C. 20460. The Agency requests that a separate copy also be sent to the contact person listed below. The docket is located at the above address in Room M–1500, Waterside Mall (ground floor), and may be inspected from 8:30 a.m. to 4 p.m., Monday through Friday. Materials related to this rulemaking are available upon request from the Air and Radiation Docket and Information Center by calling (202) 260–7548 or 7549. The FAX number for the Center is (202) 260–4400. A reasonable fee may be charged for copying docket materials.

Comments and data also may be submitted electronically by sending electronic mail (e-mail) to: a-and-r-docket@epamail.epa.gov. Electronic comments must be submitted as an ASCII file avoiding the use of special characters and any form of encryption. Comments and data also will be accepted on disks in WordPerfect in 5.1 file format or ASCII file format. All comments and data in electronic form must be identified by the docket number A–92–71. No Confidential Business Information (CBI) should be submitted through e-mail. Electronic comments on this proposed rule may be filed online at many Federal Depository Libraries.

Public Hearing. If a public hearing is held, it will be held at EPA's Office of Administration Auditorium, Research Triangle Park, North Carolina. Persons wishing to present oral testimony should notify Ms. Donna Collins, Combustion Group (MD–13), U.S. Environmental Protection Agency, Research Triangle Park, North Carolina 27711, telephone number (919) 541–5578, FAX number (919) 541–5450.

Technical Support Documents. The technical support documents summarizing information gathered during the review may be obtained from the docket; from the EPA library (MD–35), Research Triangle Park, North Carolina 27711, telephone number (919) 541–2777, FAX number (919) 541–0804; or from the National Technical Information Services, 5285 Port Royal Road, Springfield, Virginia 22161, telephone number (703) 487–4650. Please refer to ''New Source Performance Standards, Subpart Da—Technical Support for Proposed Revisions to NO_X Standard'', EPA–453/R–94–012 or ''New Source Performance Standards, Subpart Db—Technical Support for Proposed Revisions to NO_X Standard'', EPA–453/R–95–012.

Docket. Docket No. A–92–71, containing supporting information used in developing the proposed revisions, is available for public inspection and copying from 8:30 a.m. to 12:00 p.m. and 1:00 to 3:00 p.m., Monday through Friday, at EPA's Air Docket Section, Waterside Mall, Room 1500, 1st Floor, 401 M Street, S.W., Washington, D.C. 20460. A reasonable fee may be charged for copying docket materials, including printed paper versions of electronic comments which do not include any information claimed as CBI.

FOR FURTHER INFORMATION CONTACT: For information concerning specific aspects of this proposal, contact Mr. James Eddinger, Combustion Group, Emission Standards Division (MD–13), U.S. Environmental Protection Agency, Research Triangle Park, North Carolina 27711, telephone number (919) 541–5426.

SUPPLEMENTARY INFORMATION: The following outline is provided to aid in locating information in this notice.

I. Background
II. Proposed Revisions
III. Rationale for Proposed Revisions
  A. Performance of NO_X Control Technology
  B. Control Technology Costs
  C. Regulatory Approach
  D. Revised Standard for Electric Utility Steam Generating Units (Subpart Da)
  E. Revised Standard for Industrial-Commercial-Institutional Steam Generating Units (Subpart Db)
  F. Alternate Standard for Consideration
IV. Modification and Reconstruction Provisions
V. Summary of Considerations Made in Developing the Rule
VI. Summary of Cost, Environmental, Energy, and Economic Impacts
VII. Request for Comments
VIII. Administrative Requirements

This document is also available on the Technology Transfer Network (TTN), one of the EPA's electronic bulletin boards. The TTN provides information and technology exchange in various areas of air pollution control. The service is free, except for the cost of a phone call. Dial (919) 541–5742 for up to a 14,400 bps modem. The TTN is also accessible via the Internet at ''ttnwww.rtpnc.epa.gov.'' If more information on the TTN is needed, call the HELP line at (919) 541–5384.

I. Background

Title IV of the Clean Air Act (the Act), as amended in 1990, authorizes the EPA to establish an acid rain program to reduce the adverse effects of acidic deposition on natural resources, ecosystems, materials, visibility, and public health. The principal sources of the acidic compounds are emissions of sulfur dioxide (SO_2) and NO_X from the combustion of fossil fuels. Section 407(c) of the Act requires the EPA to revise standards of performance previously promulgated under section 111 for NO_X emissions from fossil-fuel fired steam generating units, including both electric utility and nonutility units. These revised standards of performance are to reflect improvements in methods for the reduction of NO_X emissions.

The current standards for NO_X emissions from fossil-fuel fired steam generating units, which were promulgated under section 111 of the Act, are contained in the new source performance standards (NSPS) for electric utility steam generating units (40 CFR 60.40a, subpart Da) and for industrial-commercial-institutional steam generating units (40 CFR 60.40b, subpart Db).

The current NO_X standards for new utility steam generating units were promulgated on June 11, 1979 (44 FR 33580). The NSPS apply to electric utility steam generating units capable of firing more than 73 megawatts (MW) (250 million Btu/hour) heat input of fossil fuel, for which construction or modification commenced after September 18, 1978. The current NSPS also apply to industrial cogeneration facilities that sell more than 25 MW of electrical output and more than one-third of their potential output capacity to any utility power distribution system. The current NO_X standards for new electric utility steam generating units are fuel-specific and were based on combustion modification techniques. At the time the NSPS was promulgated, the most effective combustion modification techniques for reducing NO_X emissions from utility steam generating units were judged to be combinations of staged combustion [overfire air (OFA)], low excess air (LEA), and reduced heat release rate.

The NSPS for NO_X emissions for industrial steam generating units was promulgated on November 25, 1986 (51 FR 42768). The NSPS apply to industrial steam generating units with a heat input capacity greater than 29 MW (100 million Btu/hour), for which construction, modification, or reconstruction commenced after June 19, 1984. The NO_X standards promulgated for industrial steam generating units are fuel- and boiler-specific and were based on the performance of LEA and LEA-staged combustion modification techniques.

II. Proposed Revisions

Standards of performance for new sources established under section 111 of the Act are to reflect the application of the best system of emission reduction which (taking into consideration the cost of achieving such emission reduction, any nonair quality health and environmental impact and energy requirements) the Administrator determines has been adequately demonstrated. This level of control is commonly referred to as best demonstrated technology (BDT).

The proposed standards would revise the NO_X emission limits for steam generating units in subpart Da (Electric Utility Steam Generating Units) and subpart Db (Industrial-Commercial-Institutional Steam Generating Units). Only those electric utility and industrial steam generating units for which construction, modification, or reconstruction is commenced after July 9, 1997 would be affected by the proposed revisions.

The NO_X emission limit proposed in today's notice for subpart Da units is 170 nanograms per joule (ng/J) [1.35 lb/megawatt-hour (MWh)] net energy output regardless of fuel type. For subpart Db units, the NO_X emission limit being proposed is 87 ng/J (0.20 lb/million Btu) heat input from the combustion of any gaseous fuel, liquid fuel, or solid fuel; however, for low heat release rate units firing natural gas or distillate oil, the current NO_X emission limit of 43 ng/J (0.10 lb/million Btu) heat input is unchanged.

Compliance with the proposed NO_X emission limit is determined on a 30-day rolling average basis, which is the same requirement as the one currently in subparts Da and Db.

The proposed revisions to the quarterly SO_2, NO_X, and opacity reporting requirements of subparts Da and Db would allow electronic quarterly reports to be submitted in lieu of the written reports currently required under sections 60.49a and 60.49b. The electronic reporting option would be available to any affected facility under subpart Da or Db, including units presently regulated under those subparts. Each electronic quarterly report would be submitted no later than 30 days after the end of the calendar quarter. The format of the electronic report would be consistent with the electronic data reporting (EDR) format specified by the Administrator under section 75.64(d) for use in the Title IV Acid Rain Program. Each electronic report would be accompanied by a certification statement from the owner or operator indicating whether compliance with the applicable emission standards and minimum data requirements was achieved during the reporting period.

III. Rationale for Proposed Revisions

A. Performance of NO_X Control Technology

The control technologies that are commercially available for reducing NO_X emissions can be grouped into one of two fundamentally different techniques: combustion control and flue gas treatment. Generally, combustion controls reduce NO_X emissions by suppressing NO_X formation during the combustion process. Flue gas treatment controls are add-on controls that reduce NO_X emissions after combustion has occurred.

Combustion control techniques generally employed on wall-fired pulverized coal (PC) fired units include low NO_X burners (LNB) (i.e., burners that incorporate LEA and air staging within the burner) or LNB with OFA. For tangentially-fired PC units, combustion control techniques generally employed include LNB (i.e., a low NO_X configured coal and air nozzle array and injection of a portion of the combustion air through air nozzles above, but essentially within the same waterwall hole as the coal and air nozzle array) or LNB with separated OFA (i.e., LNB with additional air nozzles above but outside the waterwall hole that includes the coal and air nozzle array). For control of fluidized bed combustion (FBC) and stoker steam generating units, air staging is the form of combustion control employed.

Another group of combustion control techniques are based on the use of clean fuels (i.e., natural gas). Commercially available gas-based control techniques are reburning and cofiring with coal or oil. In reburning, natural gas is injected above the primary combustion zone to create a fuel-rich zone to reduce burner-generated NO_X to molecular nitrogen (N_2) and water vapor. It is necessary to add overfire air above the reburning zone to complete combustion of the reburning fuel. Natural gas cofiring consists of injecting and combusting natural gas near or concurrently with the main oil or coal fuel.

Two commercially available flue gas treatment technologies for reducing NO_X emissions from fossil fuel-fired steam generating units are selective noncatalytic reduction (SNCR) and

selective catalytic reduction (SCR). In SNCR, ammonia (NH_3) or urea is injected into the flue gas to reduce NO_X to N_2 and water. The SCR utilizes injection of NH_3 into the flue gas in the presence of a catalyst. The catalyst promotes reactions that convert NO_X to N_2 and water at higher removal efficiencies and lower flue gas temperatures than required for SNCR.

Application of flue gas treatment technologies on coal-fired boilers in the United States (U.S.) has grown considerably during the past two years. However, both SNCR and SCR technologies have been applied widely to commercial-scale gas-and oil-fired steam generating units. Both technologies have been applied to coal-fired steam generating units outside the U.S. The SCR technology has been implemented on coal-fired steam generating units in Germany and Japan over the past 15 years and has achieved substantially reduced NO_X emission levels. A recent EPA report notes that there are 72 coal-fired plants (137 units) in Germany, 28 coal-fired plants (40 units) in Japan, 9 coal-fired plants (29 units) in Italy, and 8 coal-fired plants (10 units) in other European countries using SCR (See EPA report, ''Performance of SCR Technology for NO_X Emissions at Coal-Fired Electric Utility Units in the United States and Western Europe'').

The SCR technology is currently being applied on seven coal-fired steam generating units in the U.S. These applications are described in Table 1.

TABLE 1.—FULL-SCALE SCR EXPERIENCE ON COAL-FIRED UNITS IN THE U.S.

Plant, Unit No., and State	Size (MWe)	Year online
Birchwood 1, VA	245	1996
Carney's Point 1, NJ	140	1994
Carney's Point 2, NJ	140	1994
Indiantown, FL	370	1996
Logan 1, NJ	230	1994
Merrimack 2, NH	320	1995
Stanton 2, FL	460	1996

The SNCR technology has been applied in the U.S. to a number of coal-fired utility and industrial steam generating units. Each of these control technologies is discussed in the technical support documents.

The performance of combustion controls applied to subpart Da coal-fired steam generating units was evaluated through statistical analyses of continuous emission monitoring (CEM) data obtained from operators of conventional and FBC electric utility steam generating units. The objective of the analyses was to assess long-term NO_X emission levels that can be achieved continuously using combustion controls. For the data analyses, individual steam generating units were selected to represent the primary coal types and furnace configurations (PC and FBC) used in this source category. The procedures used to select individual steam generating units for statistical analyses, the statistical analyses that were performed, and the results of the statistical analyses for six sets of data reflecting recent operating experience for subpart Da units using combustion controls are described in the technical support document for the subpart Da revision. The results indicate that the achievable NO_X emissions from each steam generating unit are lower than the current standard.[1]

The performance of combustion controls applied to stoker coal-fired steam generating units was not evaluated using a detailed statistical analyses of CEM data. However, long-term NO_X emission data obtained from four subpart Da stoker units with combustion controls (i.e., air staging) were typically between 0.48 and 0.53 lb/million Btu heat input. In stoker steam generating units, a minimum amount of undergrate air must be used to provide adequate mixing and cooling. Since the use of air staging reduces undergrate air flow, there may be a limit to the degree of air staging used in stoker units and consequently to the NO_X reduction that can be achieved.

A statistical analysis of combustion controls applied to gas-and oil-fired utility steam generating units was also not performed since: (1) there are no known operating subpart Da natural gas- or oil-fired utility units; (2) there are pre-NSPS utility steam generating units burning these fuels that have been retrofit with combustion controls, but long-term CEM data for these units were unavailable during the development of the technical support document.

The NO_X control performances of both flue gas treatment technologies (i.e., SNCR and SCR) were evaluated based on short-term test data from retrofit installations and permitted conditions for new units. Long-term CEM data were used to evaluate SNCR for FBC boilers and SCR for pulverized coal-fired units. The flue gas treatment NO_X control technology currently receiving the most attention in the U.S. is SCR for conventional coal-fired utility steam generating units.

Short-term test results of SNCR applied to fossil-fuel fired utility boilers were obtained on 2 conventional coal-fired, 7 FBC, 2 oil-fired, and 10 gas-fired applications. For the conventional coal-fired units, the NO_X reductions varied from 30 to 60 percent at full load, with NO_X emission levels from 0.5 to 0.76 lb/million Btu. These units were originally uncontrolled pre-NSPS units. The NO_X emissions from the seven FBC units ranged from 0.03 to 0.1 lb/million Btu at full load conditions. For oil-fired units, the NO_X emissions varied from 0.14 to 0.17 lb/million Btu, depending on the NH_3/NO_X ratio. This corresponds to NO_X removal efficiencies of 48 to 56 percent from uncontrolled levels. For gas-fired boilers, NO_X emissions ranged from 0.07 to 0.10 lb/million Btu at full load conditions or about 10 to 40 percent reduction in NO_X emissions. One utility company reported information on the retrofit of 16 gas/oil-fired steam generating units indicating a 25 to 30 percent reduction in NO_X emissions from combustion-controlled levels.

For evaluating the performance of SCR, short-term test results were obtained from pilot-scale installations at two coal-fired and one oil-fired steam generating unit, and from commercial-scale installations at two coal-fired and two gas-fired steam generating units. Permitted conditions for six new coal-fired facilities and two new gas-fired facilities equipped with SCR systems also were obtained. In addition, long-term CEM NO_X emission data for full-scale SCR applications at five pulverized coal-fired units with SCR were obtained. To date, EPA is not aware of any full-scale SCR applications on oil-firing steam generating units in the U.S.

For the pilot-scale coal-fired demonstrations, the project results indicate that 75 to 80 percent NO_X reductions from uncontrolled levels were achieved.

Commercial-scale SCR installations on coal-fired units currently operating in the U.S. are designed for NO_X reductions between 50 and 63 percent from combustion control levels, with design and permitted NH_3 slip levels (i.e., amount of unreacted NH_3 in exhaust gas) of 5 ppm or less. Short-term test results obtained from new installations range from 0.10 to 0.15 lb/million Btu. The long-term CEM data obtained from two of these coal-fired units have been evaluated using statistical analyses. The results indicate

[1] It should be noted that CEM data submitted to EPA under 40 CFR part 75 were not available during the development of the technical support document. However, a preliminary examination of these data shows that the average 30-day rolling NO_X emission rates were as low as 0.22 lb/million Btu heat input from conventional PC units applying only LNB.

that the estimated achievable NO_X emission rate from both units is 0.142 lb/million Btu heat input, on a 30-day rolling average basis. Further, the EPA recently analyzed long-term CEM data from five new U.S. coal-fired units. All units operated below their permitted NO_X emission levels, which were no greater than 0.17 lb/million Btu (EPA report ''Performance of Selective Catalytic Reduction Technology for NO_X Emissions at Coal-Fired Electric Utility Units in the United States and Western Europe''). Currently, EPA does not have CEM data available for a coal-fired U.S. unit that just started up (Birchwood Unit 1). However, in a recent public forum (cite: presentation by David Gallaspy, VP Asia Pacific Rim, Southern Electric International, at the 5th Annual CCT Conference, Tampa, Florida, Jan. 7–10, 1997) the operating utility stated that this unit is achieving 0.15 to 0.16 lb/million Btu with combustion controls alone and 0.07 to 0.08 lb/million Btu with the addition of SCR.

Permitted NO_X emission levels (30-day rolling average) for new coal-fired utility steam generating units equipped with SCR typically range from 0.15 lb/million Btu for pulverized coal-fired units to 0.25 lb/million Btu for stoker units.

For gas-fired steam generating units equipped with SCR, no permitted NO_X emission levels were available for gas-fired utility steam generating units equipped with SCR; however, permitted NO_X levels range from 0.01 to 0.03 lb/million Btu for new gas-fired industrial steam generating units equipped with SCR. No permitted NO_X levels were available for new oil-fired steam generating units, either utility or industrial, equipped with SCR.

B. Control Technology Costs

The annualized costs and cost effectiveness of the NO_X control options for utility steam generating units are given in Table 2. The cost algorithms and assumptions used to estimate capital and annualized costs and the model boilers developed for analyses are described in the technical support documents.[2] (For SCR and SNCR costs, refer to the Draft Technical Report ''Cost Estimates for Selected Applications of NO_X Control Technologies on Stationary Combustion Boilers,'' March 1996.)

TABLE 2.—ANNUALIZED COSTS AND INCREMENTAL COST EFFECTIVENESS (OVER THE BASELINE) OF NO_X CONTROLS ON UTILITY STEAM GENERATING UNITS

[1995 Dollars] [1]

Steam generating unit type	SNCR		SCR	
	Total annualized costs (mills/kwh)	Cost effectiveness ($/ton NO_X removed)	Total annualized costs (mills/kwh)	Cost effectiveness ($/ton NO_X removed)
Gas	0.5–0.8	1,600–3,100	0.55–1.1	1,400–2,700
Oil	0.7–1.0	1,150–1,600	0.95–1.7	1,550–2,700
Coal	1.2–1.7	1,170–1,630	2.1–3.3	1,460–2,270

[1] In Table 2, the SNCR and SCR costs are for applications on wall-fired boilers, designed to achieve a NO_X emission limit of 0.15 lb/million Btu. The baseline NO_X levels used in determining the cost-effectiveness estimates were: (1) 0.45 lb/million Btu for coal-fired boilers, (2) 0.25 lb/million Btu for gas-fired boilers, and (3) 0.30 lb/million Btu for oil-fired boilers.

The costs are presented in ranges to reflect the range of sizes (100 to 1,000 MW) of the modeled units. The costs presented are based on a capacity factor of 0.65. The costs for SNCR and SCR with combustion controls are for retrofit installations and these costs for new boilers might be lower than the costs shown in Table 2. (It is not expected that gas- and oil-fired units would utilize SCR to meet the proposed revised standards and, thus, these units would not incur the costs associated with SCR use.) The cost effectiveness listed for each control option represents the incremental cost-effectiveness of applying that technology over the baseline (i.e., NO_X levels being achieved with technologies installed to meet the current NSPS).

The main differences between industrial steam generating units and utility steam generating units are that industrial steam generating units tend to be smaller and tend to operate at lower capacity factors. The differences between industrial and utility steam generating units would be reflected in the cost impacts of the various NO_X control technologies. Smaller sized and lower capacity factor units tend to have higher cost on a per unit output basis. The annualized costs and cost effectiveness of the NO_X control options, based on a model boiler analysis, for industrial steam generating units are given in Table 3.

TABLE 3.—ANNUALIZED COSTS AND INCREMENTAL COST EFFECTIVENESS (OVER THE BASELINE) OF NO_X CONTROLS OF INDUSTRIAL STEAM GENERATING UNITS

[1995 Dollars]

Fuel type	SNCR		SCR	
	Annualized costs (expressed as % of steam costs)	Cost effectiveness ($/ton NO_X removed)	Annualized costs (expressed as % of steam costs)	Cost effectiveness ($/ton NOx removed)
Gas/Distillate Oil	1.5–47.3	3,400–95,300	5.4–108.5	6,200–147,900
Residual Oil	2.2–47.5	1,080–23,700	6.6–113.0	2,500–43,100
Coal	1.9–15.2	550–4,710	10.3–45.2	1,590–8,700

[2] Note that updated costs of SNCR and SCR applications have been presented in the document ''Cost Estimates for Selected Applications of NO_X Control Technologies on Stationary Combustion Boilers,'' March 1996. These updated costs are shown in Table 2.

The costs are presented in ranges to reflect the range of sizes (100 to 1,000 million Btu per hour) and capacity factors (0.1 to 0.6) of the modeled units. The cost effectiveness listed for each control option represents the incremental cost-effectiveness of applying that technology over the baseline (i.e., NO_X levels being achieved with technologies installed to meet the current NSPS).

C. Regulatory Approach

In selecting a regulatory approach for formulating revised standards to limit NO_X emissions from new fossil fuel fired steam generating units, the performance and cost of the NO_X control technologies discussed above were considered. The technical basis selected for establishing revised NO_X emission limits is the performance of SCR (in combination with combustion controls). The regulatory approach adopted to revise the current fuel/boiler-specific standards would establish for both utility and industrial steam generating units one emission standard which would be based on the performance of SCR on coal-fired units in combination with combustion controls. This uniform standard would be applicable regardless of fossil fuel type or boiler type.

This regulatory approach differs from the historical approach to establishing NO_X emission limits for fossil fuel-fired steam generating units, in which different emission limits are developed for different combinations of fuel (gas, oil, coal) and boiler types, based on the performance of a particular control technology applied to each fuel/boiler type combination. The current subparts Da and Db standards for NO_X emissions are based on this approach. Under this new regulatory approach, the focus is on controlling NO_X emissions from the generation of electricity or steam based on BDT without regard to specific type of steam generating equipment. This approach provides an incentive to consider both fuel/boiler type combination and control technology when developing a NO_X control strategy. Since the basis selected for the revisions is the high NO_X removal performance of SCR, the relationship between boiler NO_X emissions and boiler design, fuel, and operation is of lesser concern than if the basis was the performance of combustion controls. Under the Clean Air Act Amendments of 1990, the definition of ''Best Available Control Technology'' was revised to include clean fuels. The definition of ''continuous system of emission reduction'' under section 111 also allows EPA to consider clean fuels because the term includes any process for production or operation of any source which is inherently low polluting or non-polluting. Under this regulatory approach, an emission limit is developed based on the performance of the cleanest fuel so long as there is a technology which allows other fuels to comply with that limit while providing cost-effective NO_X reductions. This approach addresses the primary regulatory concern, NO_X, but also can result in lower carbon dioxide (CO_2), air toxics, particulate, and SO_2 emissions, as well as lower solid waste and waste water discharges.

The EPA's analysis shows that SCR can reduce NO_X emissions from coal-fired units to 0.15 lb/million Btu heat input. For oil-fired units, SNCR in combination with combustion controls would be able to achieve this NO_X level. New gas-fired units may require some degree of SNCR if improved combustion controls alone are unable to achieve this level.

In light of the cost considerations associated with the application of flue gas treatment over the range of industrial gas-fired and distillate oil-fired units, a higher uniform NO_X emission limit of 0.20 lb/million Btu heat input was selected for industrial steam generating units. Under EPA's regulatory approach, new gas-fired and distillate oil-fired units would not require any additional controls over those required under the current NSPS. Based on EPA's cost impact analysis, it is estimated that by establishing the NO_X level at 0.20 lb/million Btu rather than at 0.15 lb/million Btu, the annual nationwide control costs for new industrial steam generating units will be reduced substantially, about 70 percent, since the revision would result in no additional controls on gas-and distillate oil-fired units. Since these gas and distillate oil-fired units tend to be smaller in size and operated at lower capacity factors than coal-fired industrial units, they tend to have much higher cost-effectiveness values associated with the application of flue gas treatment than do coal-fired units.

The single emission limitation approach would expand the control options available by allowing the use of clean fuels as a method for reducing NO_X emissions. Since projected new utility steam generating units are predominantly coal-fired, the use of clean fuels (i.e., natural gas) as a method of reducing NO_X emissions from these coal-fired steam generating units may give the regulated community a more cost-effective option than the application of SCR. Similarly, for industrial units, the use of clean fuels as a method of reducing emissions may be a cost-effective approach for coal-fired and residual oil-fired industrial steam generating units.

Summary of Analyses. In order to determine the appropriate form and level of control for the proposed revisions, EPA performed extensive analyses of the potential national impacts associated with the revised standards. These analyses examined the potential incremental national environmental and cost impacts resulting from EPA's regulatory approach in the fifth year following proposal of the revised standards. The environmental impacts of the revised standards were examined by projecting NO_X emissions for each planned utility boiler and industrial boiler. The cost impact analysis of the regulatory approach included an estimation of the unit capital expenditures for air pollution control equipment, as well as operating and maintenance expenses associated with the equipment. These costs were examined both in terms of annualized costs and percent of boiler output. The regulatory approach also was examined in terms of cost per ton of NO_X removed.

The regulatory baseline used for the national impact analyses consists of permitted levels for the planned utility steam generating units and the existing NSPS applicable to industrial steam generating units (i.e., subpart Db). The projected 5-year utility boiler population was based on information obtained from two published reports which list planned utility units. Utility owners and regulatory agencies were contacted to update these projections and to determine the permitted NO_X emission levels for these units. It is estimated that a total of 17 new boilers will be built over the 5-year period, which would become subject to the revised subpart Da NO_X standard. For the industrial boiler category, sales data and projected growth rates were used to estimate the number, capacity, fuel type, and capacity factor of the industrial units expected to be built during a 5-year period. The analysis projects that 381 new industrial steam generating units will be constructed over the 5-year period under the regulatory baseline. This projected total would consist of 293 natural gas-or distillate oil-fired units, 66 residual oil-fired units, and 22 coal-fired units.

Shown in Table 4 are the annualized costs, NO_X reduction (tons/year), and cost effectiveness ($/ton of NO_X removed) for the utility and industrial steam generating units regulated under EPA's regulatory approach. Note that the cost effectiveness is the average

incremental costs per ton of NO_X removed over the baseline (i.e., current NSPS). The cost effectiveness is determined by dividing the change in annualized cost by the change in annual emissions, as compared to the current standards.

TABLE 4.—SUMMARY OF NATIONAL IMPACTS FOR UTILITY AND INDUSTRIAL STEAM GENERATING UNITS

Impacts	Units	Utility steam generating units	Industrial steam generating units
Annualized Costs:			
Total	$million/year	40	41
Range	% of boiler output	0–4.3	0–11.8
Average	% of boiler output	2.0	1.8
NO_X Reduction	Tons/year	25,840	19,980
Cost Effectiveness:			
Range	$/Ton NO_X Removed	0–3,240	0–4,800
Average	$/Ton NO_X Removed	1,510	2,030

As shown in Table 4, under EPA's regulatory approach, national NO_X emissions would be reduced by about 41,560 megagrams (Mg) (45,800 tons) per year. These NO_X reductions on utility and industrial units will be obtained at an average cost effectiveness of about $1,770/ton of NO_X removed.

D. Revised Standard for Electric Utility Steam Generating Units (Subpart Da)

All known operating utility steam generating units currently subject to subpart Da are coal-fired and use some form of combustion control to comply with applicable emission limits. However, six recently installed conventional PC units and some FBC units use add-on NO_X controls. Most new electric utility steam generating units are projected to burn coal. Consequently, the NO_X studies used to develop the proposed revision have concentrated on the combustion of coal.

The current NO_X standards for subpart Da were based on combustion control techniques and are fuel-specific. When these limits were promulgated in 1979, the most effective combustion control techniques for reducing NO_X emissions from utility steam generating units were judged to be combinations of staged combustion, LEA, and reduced heat release rate.

Currently, SCR is considered to be the most effective NO_X control technology for new electric utility steam generating units. Based on available performance data and cost analyses, the Administrator has concluded that the application of SCR represents the best demonstrated system of continuous emission reduction (taking into consideration the cost of achieving such emission reduction, any nonair quality health and environmental impact, and energy requirements). Consequently, SCR was chosen as the basis for revising the NO_X emission limits due to its relatively high NO_X removal efficiency.

The national average cost effectiveness of additional NO_X control under this regulatory approach is about $1,500/ton NO_X removed. Further, under EPA's regulatory approach, the cost of the installation and operation of the additional NO_X control equipment does not result in any significant adverse economic impacts.

A benefit associated with the use of EPA's regulatory approach as the basis for the revised NO_X standard is that the approach expands the control options available by allowing the use of clean fuels as a method for reducing NO_X emissions. Since projected new utility steam generating units are predominantly coal-fired, the use of clean fuels (i.e., natural gas) can be a method of achieving cost effective emission reductions from these coal-fired steam generating units.

Based on available performance data and cost analyses, the Administrator is proposing today a revised NO_X emission limit for electric utility steam generating units that applies regardless of fuel type and which is based on coal-firing and the performance of SCR control technology in combination with combustion controls. The analysis shows that SCR can reduce NO_X emissions from coal-fired units to 0.15 lb/million Btu heat input or less. This NO_X emission level reflects about a 75 percent reduction in NO_X emissions over the current subpart Da limits for coal-fired units. This NO_X emission level also reflects about a 50 and 25 percent reduction in NO_X emissions over the current subpart Da limits for oil-fired and gas-fired units, respectively.

Regarding the revised NO_X emission limitation, the Administrator sought to achieve the best balance between control technology and environmental, economic, and energy considerations. In selecting a single emission limitation for electric utility steam generating units that would be applicable regardless of fuel type, the Administrator sought not to limit the control options available for compliance, but to provide flexibility for cheaper and less energy intensive control technologies (i.e., by allowing the use of clean fuels for reducing NO_X emissions). Available gas-based control techniques are cofiring with coal or oil, reburning, and switching to gas as the principal fuel. The clean fuel approach fits well with pollution prevention which is one of the EPA's highest priorities. Because natural gas is essentially free of sulfur and nitrogen and without inorganic matter typically present in coal and oil, SO_2, NO_X, inorganic particulate, and air toxic compound emissions can be dramatically reduced, depending on the degree of natural gas use. With these environmental advantages, gas-based control techniques would be viewed as a sound alternative to flue gas treatment technologies for coal or oil burning.

The fuel cost differential between gas and coal is one of the main concerns with the application of gas-based technologies for the reduction of NO_X from coal-fired boilers. Access to gas supply (proximity to pipeline) and long-term gas availability are additional concerns that may limit natural gas use solely for NO_X control. Therefore, selection of SCR in combination with combustion controls as the basis for the proposed revised NO_X limitation is appropriate since this technology is expected to be an important part of the compliance mix for coal-fired boilers. Again, for new oil-fired units, SNCR in combination with combustion controls would be able to achieve the proposed limit. New gas-fired units may require some degree of SNCR if improved combustion controls alone are unable to achieve the revised limitation which reflects a 25 percent reduction in NO_X emissions over the current NO_X standard for gas-fired utility units.

Output-Based Format. The EPA has established pollution prevention as one of the its highest priorities. One of the opportunities for pollution prevention lies in simply using energy efficient technologies to minimize the generation of emissions. The EPA investigated ways to promote energy efficiency in utility plants by changing the manner in which it regulates flue gas NO_X emissions (see EPA white paper, ''Use of Output-based Emission Limits in NO_X Regulations''). Therefore, in an effort to promote energy efficiency in utility steam generating facilities, the Administrator is proposing an output-based standard, which is a revised format, for subpart Da.

Traditionally, utility NO_X emissions have been controlled on the basis of boiler input energy (lb of NO_X/million Btu heat input). However, input-based limitations allow units with low operating efficiency to emit more NO_X per megawatt (MWe) of electricity produced than more efficient units. Considering two units of equal capacity, under current regulations, the less efficient unit will emit more NO_X because it uses more fuel to produce the same amount of electricity. One way to regulate mass emissions of NO_X and plant efficiency is to express the NO_X emission standard in terms of output energy. Thus, an output-based emission standard would provide a regulatory incentive to enhance unit operating efficiency and reduce NO_X emissions. Two of the possible output-based formats considered for the revised NO_X standard were: (1) mass of NO_X emitted per gross boiler steam output (lb NO_X/million Btu heat output), and (2) mass of NO_X emitted per net energy output [lb NO_X/megawatt-hour(MWh)]. The criteria used for selecting the format were ease in monitoring and compliance testing and ability to promote energy efficiency.

The objective of an output-based standard is to establish a NO_X emission limit in a format that incorporates the effects of plant efficiency. Additionally, the limit should be in a format that is practical to implement. Thus, the format selected must satisfy the following: (1) provide flexibility in promotion of plant efficiency; (2) permit measurement of parameters related to stack NO_X emissions and plant efficiency, on a continuous basis; and (3) be suitable for equitable application on a variety of power plant configurations.

The option of lb NO_X/million Btu steam output accounts only for boiler efficiency and ignores both the turbine cycle efficiency and the effects of energy consumption internal to the plant. The boiler efficiency is mainly dependent on fuel characteristics. Beyond the selection of fuels, plant owners have little control over boiler efficiency. This option, therefore, does not meet the first criterion, because it provides the owners with minimal opportunities for promoting energy efficiency at their respective plants.

The second output-based format option of lb NO_X/MWh net meets all three criteria. In this case, the net plant energy output represents the energy exported out of the plant to other sources. This energy output takes into account all internal energy consumption and losses for the plant. An emission limit based on this format, therefore, provides the owners with all possible opportunities for promoting energy efficiency at their respective plants. This option would require continuous measurement of the mass rate of NO_X emissions and net plant energy output. The net energy output can include both electrical and thermal (process steam) outputs. Both of these energy outputs are relatively easy to measure accurately, and currently are measured routinely in power plants. Further, since this option does take into account the auxiliary power requirements, an emission limit based on this format can be applied equitably on a variety of power plant configurations.

Based on this analysis, an emission limit format based on mass of NO_X emissions per net plant energy output is selected for the proposed output-based standard. Because electrical output, measured directly in MW, is the main energy output at all power plants, it is desirable to use a format in ''lb NO_X/MWh net.'' The EPA, however, requests comments on the selected format of ''lb NO_X/MWh net'' since a format of ''lb NO_X/MWh gross'' may be more equitable in light of the varying auxiliary power requirements that may exist at power plants. At cogeneration plants, energy output is associated with electricity and process steam; however, the useful heat (Btu/hr) present in steam can be converted to MW.

Compliance with the output-based emission limit would require continuous measurement of plant operating parameters associated with the mass rate of NO_X emissions and net energy outputs. In the case of cogeneration plants where process steam is an output product, means would have to be provided to measure the process steam flow conditions and to determine the useful heat energy portion of the process steam that is interchangeable with electrical output.

Instrumentation already exists in power plants to conduct these measurements since the instrumentation is required to support current emission regulations and normal plant operation. Consequently, compliance with the output-based emission limit is not expected to require any additional instrumentation. A current federal regulation (40 CFR Part 75) requires measurements of both NO_X concentration and flue gas flow rate (for calculating mass rate of NO_X emissions), whereas metering of net electrical output must be provided to account for net electrical sendout from the plant. Therefore, no additional instrumentation is required for conventional utility applications to comply with the output-based emission limit. However, additional signal input wiring and programming is expected to be required to convert the above measurements into the compliance format (lb NO_X/MWh net).

For cogeneration units, steam is also generated for process use. The energy content of this process steam also must be considered in determining compliance with the output-based standard. This can be accomplished by measuring the total heat content of each process steam source (from the measured flow, pressure, and temperature) and then calculating the useful energy output. If the equivalent electrical energy (useful heat) content of the process steam is expressed in the form of curves, no new instrumentation is required. The information from these curves can be programmed into the plant monitoring system and the equivalent electrical energy for each process steam source can be calculated. This equivalent electrical energy (MW) can be added to the plant's actual net electrical output (MW) to arrive at the plant's total net energy output (MW). This total net energy output (MW) used with the mass rate of NO_X emissions (lb/h), yields the NO_X emissions (lb/MWh net) for compliance.

Since all the reported data obtained throughout the development of the revised standards are in the current format of lb/million Btu heat *input,* EPA applied an efficiency factor to the current format to develop the output-based NO_X limit. The efficiency factor approach was selected because the alternative of converting all the reported data in the database to an output-basis would require extensive data gathering and analyses. Applying a baseline net efficiency would essentially convert the selected heat input-based NO_X level to an output-based emission limit. The EPA solicits comment on this format approach.

The output-based standard must be referenced to a baseline efficiency. Most existing electric utility steam generating

plants fall in the range of 24 to 38 percent efficiency. However, newer units (both coal- and gas-fired) operate around 38 percent efficiency; therefore, 38 percent was selected as the baseline efficiency. The EPA requests comment on: (1) whether 38 percent is an appropriate baseline efficiency, (2) how often the baseline efficiency should be reviewed and revised in order to account for future improvements in electric generation technology, and (3) whether a 30-day rolling average is sufficient to account for any operating efficiency variability.

The efficiency of electric utility steam generating units usually is expressed in terms of heat rate, which is the ratio of heat input, based on higher heating value (HHV) of the fuel, to the energy (i.e., electrical) output. The heat rate of a utility steam generating unit operating at 38 percent efficiency is 9.5 joules per watt hour (9,000 Btu per kilowatt hour).

The efficiency of a steam generating plant refers to its net efficiency. This is the net useful work performed divided by the fuel heat input, taking into account the energy requirements for auxiliaries (e.g., fans, soot blowers, pumps, fuel handling and preparation systems) and emission control equipment. For conventional electric utility units, the total useful work performed is the net electrical output (i.e., net busbar power leaving the plant) from the turbine/generator set. Determination of the net efficiency of a cogeneration unit includes the net electrical output and the useful work achieved by the energy (i.e., steam) delivered to an industrial process. Under a Federal Energy Regulatory Commission (FERC) regulation, the efficiency of cogeneration units is determined from ''* * * the useful power output plus one half the useful thermal output * * *,'' 18 CFR Part 292, § 205. Therefore, to determine the process steam energy contribution to net plant output, a 50 percent credit of the process steam heat was selected.

This proposed rulemaking does not include a specific methodology or methodologies for determining the unit net output. The EPA intends to specify such methods in the final rule. Consequently, the EPA requests comment on: (1) the specific methodology or methodologies appropriate and verifiable for determining the net output of a steam generating unit; and (2) whether a fixed percentage credit of 50 percent is representative of the useful heat in varying quality of process steam flows. In addition, the EPA solicits comment on whether the output-based standard in the proposed rule will promote energy efficiency improvements. The EPA acknowledges that a supplemental notice may be necessary should a specific methodology for determining the unit net output be decided upon prior to finalizing this rule.

Based on the analysis showing that SCR can reduce NO_X emissions from coal-fired units to 0.15 lb/million Btu heat input or less, the calculation of an equivalent output-based standard is straight forward using the baseline net plant efficiency. The output-based NO_X standard is computed by using the following equation:

$$E_O(\text{lb/MWh}) = E_i(\text{lb/million Btu}) * n * 1000\ \text{kwh/MWh}$$

Using an input-based emission level (Ei) of 0.15 lb/million Btu and a baseline net efficiency (n) of 9,000 Btu/kwh, the resulting output-based limit (E_O) is 1.35 lb/MWh. Based on the available performance data, cost analysis, and the above calculation, the Administrator is proposing today a revised NO_X emission limit for new electric utility steam generating units of 1.35 lb of NO_X/MWh net.

E. Revised Standard for Industrial-Commercial-Institutional Steam Generating Units (Subpart Db)

The NO_X standard promulgated in 1986 for industrial steam generating units is based on the performance of LEA and LEA-staged combustion modification techniques. The NO_X control technology examined for revising the current NSPS is SCR in combination with combustion controls. Currently, SCR is considered to be the most effective NO_X control technology for new industrial steam generating units. Based on available performance data and cost analyses, the Administrator has concluded that the application of SCR represents the best demonstrated system of continuous emission reduction (taking into consideration the cost of achieving such emission reduction, any nonair quality health and environmental impact, and energy requirements) for coal- and residual oil-fired industrial steam generating units.

Under EPA's regulatory approach, the national average cost effectiveness of additional NO_X control is about $2,000/ton NO_X with a total nationwide increase in annualized costs of about $40 million. Further, EPA's economic impacts analysis indicates that revised standards based on the adopted regulatory approach would increase product prices by less than 1 percent if all steam cost increases were passed through to product prices. Consequently, the economic impacts of standards based on EPA's regulatory approach are not expected to be significant.

As discussed above for utility steam generating units, a benefit associated with the selection of EPA's regulatory approach as the basis for the revised NO_X standard is that this regulatory approach expands the control options available by allowing the use of clean fuels as a method for reducing NO_X emissions. The use of clean fuels (i.e., natural gas) may be a cost-effective method of reducing emissions from the coal- and residual oil-fired industrial steam generating units.

Based on available performance data and cost analyses, the Administrator is proposing a revised NO_X emission limit for industrial steam generating units which is applicable regardless of fuel or boiler type, except for one boiler/fuel category. The proposed revision is based on coal-firing and the performance of SCR control technology in combination with combustion controls.

Regarding the revised NO_X emission limitation for industrial units, the Administrator again sought to achieve the best balance between control technology and environmental, economic, and energy considerations and not to limit the control options, but to provide flexibility for cheaper and less energy-intensive control technologies. Due to the cost considerations associated with the application of flue gas treatment on the range of industrial gas-fired and distillate oil-fired units, the Administrator is proposing for industrial steam generating units a revised NO_X emission limit of 0.20 lb/million Btu heat input, except for the category of low heat release rate units firing natural gas or distillate oil which retains the current NO_X emission limit of 0.10 lb/million Btu heat input. The revised limit is the same as the current NO_X emission limit for the category of high heat release rate units firing natural gas or distillate oil. Therefore, under the revised limit, new gas- fired and distillate oil-fired units would not require any additional controls over that required under the current NSPS. Based on the cost impact analysis, it is estimated that by establishing the revised limit at 0.20 lb/million Btu rather than at 0.15 lb/million Btu, the annual nationwide control costs for new industrial steam generating units will be reduced substantially, about 70 percent lower, since the revision would result in no additional controls on gas-and distillate oil-fired units. This revised limit reflects about a 50 to 70 percent reduction in NO_X emissions over the

current subpart Db limits for coal-fired and residual oil-fired units.

For low heat release rate steam generating units firing fuel mixtures that include natural gas or distillate oil, the NO_X emission limit would be determined by proration of the NO_X standards based on the respective amounts of each fuel fired when the mixture contains more than 20 percent, based on heat input, of natural gas or distillate oil. Low heat release rate steam generating units firing fuel mixtures that include 20 percent or less of natural gas or distillate oil are subject to the NO_X emission limit of 0.20 lb/million Btu heat input since the use of natural gas or distillate oil in these units is considered to be a clean fuel-based NO_X control technique.

Again, in selecting a single emission limitation that would be applicable regardless of fuel type and boiler type, the Administrator sought to expand the control options available by allowing the use of clean fuels as a method for reducing NO_X emissions. The use of clean fuels (i.e., natural gas) as a method of reducing emissions from these coal-fired and residual oil-fired industrial steam generating units may be a cost-effective approach.

Because the fuel cost differential between gas and coal and access to gas supply (proximity to pipeline) are concerns that may limit natural gas use solely for NO_X control, the control option of SCR in combination with combustion controls that was selected as the basis for the revised NO_X limitation is appropriate since this technology is expected to be an important part of the compliance mix. For residual oil-fired units, SNCR in combination with combustion controls would be able to achieve the proposed limit.

Consideration of an Output-Based Format. This proposed rulemaking for industrial steam generating units does not include an output-based format as is included in today's proposed NO_X revision for electric utility steam generating units. As stated in the discussion on the proposed revision to the utility NSPS, the Administrator has established pollution prevention as one of the EPA's highest priorities. One of the opportunities for pollution prevention lies in simply using energy efficient technologies to avoid generating emissions. In an effort to promote energy efficiency in industrial steam generating facilities, a revised output-based format for the proposed NO_X emission limit was investigated.

The two output-based formats considered were lb NO_X/MWh and lb NO_X/million Btu steam output, the same formats considered for utility steam generating units. The option of lb/MWh, selected for utility units, is more easily understood for utility applications generating only, or mostly, electricity but is unreasonable for industrial units supplying only steam (no electricity generation). The other output-based format option of lb/million Btu steam output would be based on steam output from the boiler and could be applicable to all new industrial boilers. However, this output-based format option, as previously discussed, provides the owners with only minimal opportunities for promoting energy efficiency at their respective facilities. In addition, an output-based format would require additional hardware and software monitoring requirements for measuring the stack gas flow rate (for determining the mass rate of NO_X emissions), steam production rate, steam quality, and condensate return conditions. Instrumentation to conduct these measurements may not generally exists at industrial facilities as they do at utility plants.

The EPA intends to continue to investigate appropriate output-based formats for industrial units which would promote energy efficiency. Consequently, the EPA requests comment on: (1) the specific methodology or methodologies appropriate and verifiable for determining the net energy output of an industrial steam generating unit, (2) the frequency at which the unit's net output or efficiency should be documented, and (3) whether an output-based standard for industrial steam generating units will promote efficiency improvements.

F. Alternate Standard for Consideration

Because of the fundamental change in the format of the NO_X NSPS for electric utility units, the EPA anticipates that there will be numerous concerns and comments concerning the proposed output-based standard. Therefore, the Administrator is proposing as an alternate to the output-based standard, a traditionally formatted standard of 0.15 lb/million Btu heat input. This input-based NO_X level served as the basis for developing the output-based standard being proposed today. The EPA's preference is to specify an output-based standard in the final rule, but also is proposing the input-based emission level as an alternate in case public comments and/or findings warrant reconsideration of promulgating an output-based standard. Therefore, the EPA also solicits comment on the input-based emission level selected as the basis for the output-based standard, which is achievable using SCR.

The majority of the electric utility steam generators regulated under subpart Da are also regulated under the Title IV Acid Rain Program of the Clean Air Act. The Acid Rain Continuous Emission Monitoring Regulation (40 CFR part 75) requires affected units to install, operate, maintain and quality-assure continuous monitoring systems for SO_2, NO_X, flow rate, CO_2, and opacity. Section 75.64 of part 75 requires quarterly reporting of SO_2, NO_X, and CO_2 emissions in a standardized EDR format specified by the Administrator. The EDR reporting format has been used successfully for Acid Rain Program implementation since 1994. The EDR data from calendar year 1995 were used by the EPA to determine the compliance status of the Phase I-affected Acid Rain units with respect to their allowable annual SO_2 emissions.

At the present time, there is an initiative underway in the Eastern United States to establish an emission trading program for NO_X. The program is called the Ozone Transport Commission (OTC) NO_X Budget Program. Beginning in 1998, the largest sources of NO_X in 13 eastern States will be required to account for their NO_X emissions during the ozone season. Many of the sources in the NO_X Budget Program are electric utility steam generators which are also regulated under NSPS subpart Da and under 40 CFR part 75. Many other NO_X Budget Program sources are regulated under NSPS subpart Db. To implement the NO_X Budget Program, emission data from the affected sources will be submitted electronically, in the EDR format specified under 40 CFR part 75.

At present, any Acid Rain-affected or NO_X Budget Program-affected steam generating unit which is also regulated under NSPS subpart Da or Db must meet the reporting requirements of NSPS in addition to the Acid Rain or NO_X Budget Program reporting requirements. For example, the owner or operator of a subpart Da utility unit would have to submit written NSPS compliance reports each quarter for SO_2, NO_X, and opacity, in addition to the electronic report in EDR format required by part 75.

In many instances, the data reported to meet the requirements of NSPS, the Acid Rain Program, and the OTC NO_X Budget Program are generated by the same CEM systems. The CEM data are manipulated in different ways for the different programs, but very often the NSPS, Acid Rain, and OTC reports are derived from the same data. In view of

this, EPA believes it is worthwhile to explore the possibility of consolidating or streamlining the reporting requirements for steam generating units subject to these programs.

The EPA has evaluated different ways in which the reporting burden might be reduced for units subject both to NSPS subpart Da or Db and to other program(s) such as the Acid Rain or NO_X Budget Program (see Docket Item #II–B–11; ''Assessment of Consolidating NSPS Subpart Da and Part 75 Reporting Requirements;'' February 25, 1997). The Agency has concluded that the best way to accomplish this would be to allow the SO_2, NO_X, and opacity reports currently required under subpart Da or Db to be submitted electronically in the part 75 EDR format, in lieu of written reports. To implement this electronic reporting option, special EDR record types would have to be created to accommodate the compliance information required by subparts Da and Db.

The EPA believes that in order to derive the full benefit from the electronic reporting option in today's proposal, it should be made available to all subpart Da and Db affected facilities, including units presently regulated under those subparts, and including affected units that are not regulated under part 75 or the NO_X Budget Program. Today's proposal, therefore, amends §§ 60.49a and 60.49b to allow the owner or operator of any subpart Da or Db facility to choose the electronic reporting option.

IV. Modification and Reconstruction Provisions

Existing steam generating units that are modified or reconstructed after today would be subject to today's revision and to the requirements in the General Provisions (40 CFR 60.14 and 60.15), which apply to all NSPS. Few, if any, changes typically made to existing steam generating units would be expected to bring such steam generating units under the proposed NO_X revisions.

A modification is any physical or operational change to an existing facility which results in an increase in emissions, 40 CFR Part 60, § 60.14. Changes to an existing facility which do not result in an increase in emissions, either because the nature of the change has no effect on emissions or because additional control technology is employed to offset an increase in emissions, are not considered modifications. In addition, certain changes have been exempted under the General Provisions (40 CFR 60.14). These exemptions include production increases resulting from an increase in the hours of operation, addition or replacement of equipment for emission control (as long as the replacement does not increase emissions), and use of an alternative fuel if the existing facility was designed to accommodate it, 40 CFR 60.14.

Rebuilt steam generating units would become subject to the proposed NO_X revision under the reconstruction provisions, regardless of changes in emission rate, if the fixed capital cost of reconstruction exceeds 50 percent of the cost of an entirely new steam generating unit of comparable design and if it is technologically and economically feasible to meet the applicable standard, 40 CFR 60.15.

V. Summary of Considerations Made in Developing the Rule

The Clean Air Act was created, in part, ''* * * to protect and enhance the quality of the Nation's air resources so as to promote the health and welfare and the productive capacity of its population * * *'' As such, this regulation protects the public health by reducing emissions of NO_X from electric utility and industrial facilities. Nitrogen oxides can cause lung tissue damage, can increase respiratory illness, and are a primary contributor to acid rain and ground level ozone formation. The proposed revisions will substantially reduce NO_X emissions to the levels achievable using BDT.

The alternatives considered in the development of these proposed revisions are based on emission and operating data received from operating utility and industrial facilities and permitted information for planned utility and industrial facilities. The EPA met with industry representatives several times to discuss these data and information. In addition, equipment vendors, State regulatory authorities, and environmental groups had opportunity to comment on the background information that was prepared for the proposed revisions. Of major concern to the industry was the actual numerical limits of the revisions, and whether they would, in effect, dictate the use of only one control option. By using a regulatory approach that expands NO_X control options, the EPA is proposing revised NO_X limits that address their concern.

Another major concern expressed by the utility industry was the potential impact of the revision on existing utility units. Under the General Provisions (40 CFR 60, subpart A) for standards of performance for new stationary sources, an affected facility is defined as a unit which commences construction, modification, or reconstruction after the date of publication of the proposed rulemaking. To date, no existing utility unit has become subject to subpart Da under either the modification or reconstruction provision.

In the revisions, EPA has made an effort to minimize the impacts on monitoring, recordkeeping, and reporting requirements. The proposal does alter the monitoring and recordkeeping requirements (for NO_X only) currently listed in subpart Da by incorporating by reference the monitoring provisions of the Acid Rain Regulation (40 CFR parts 72, 73, 75, 77, and 78). However, 40 CFR part 75 already requires new electric utility steam generating units to comply with these monitoring requirements. In addition, requirements for monitoring of net output, both electrical and process steam, is being added but these are routinely measured by utility boiler owners and operators. Accordingly, the averaging period (i.e., 30-day rolling average) and reporting requirements of subpart Da are not being changed or replaced by incorporating the monitoring provisions of the Acid Rain Regulation. The proposal has no anticipated impact on monitoring, recordkeeping, and reporting requirements for new electric utility steam generating units. This proposal does not alter the monitoring, recordkeeping, or reporting requirements currently listed in subpart Db.

Representatives from other EPA offices and programs are included in the regulatory development process as members of the Work Group. The Work Group is involved in the regulatory development process, and must review and concur with the regulation before proposal and promulgation. Therefore, the EPA believes that the implications to other EPA offices and programs have been adequately considered during the development of these revisions.

VI. Summary of Cost, Environmental, Energy, and Economic Impacts

The cost, environmental, energy, and economic impacts of the proposed revisions are expressed as incremental differences between the impacts of utility and industrial steam generating units complying with the proposed revisions and these units complying with current emission standards (i.e., subpart Da and Db or States' permitted limits).

The revised NO_X standards may increase the capital costs for new steam generating units because the implementation of either SNCR or SCR requires additional hardware.

The EPA estimates that 17 new utility steam generating units and 381 new industrial steam generating units will be constructed over the next 5 years and thus would be subject to the revised standards. The nationwide increase in annualized costs in the 5th year following proposal for the projected new electric utility steam generating units subject to the revised standards is estimated to be about $40 million for utility steam generating units. This impact assumes that all planned coal-fired units remain coal-fired and employ SCR. This represents an increase of about 1.3 mills/kwh in annual costs, or about a 2 percent increase in the cost of generating electricity for these units.

The nationwide increase in annualized costs for new industrial steam generating units subject to the revised standards would be about $41 million in the 5th year following proposal. This is based on the assumption that no affected unit switches fuel type as the result of the revision. This represents an average increase of about 2 percent in the cost of producing steam for new units.

The cost effectiveness of the revised NO_X standards over the existing standards for electric utility units is projected to be about $1,650/Mg ($1,500/ton) of NO_X removed. For industrial-commercial-institutional units, the cost effectiveness of the revised NO_X standards over the existing standards is projected to be about $2,200/Mg ($2,000/ton) of NO_X removed.

The primary environmental impact resulting from the revised NO_X standards is reductions in the quantity of NO_X emitted from new steam generating units subject to the proposed revisions to the NSPS. Estimated baseline NO_X emissions from these new steam generating units are 39,500 Mg/year (43,600 tons/year) from utility steam generating units and 58,400 Mg/year (64,400 tons/year) from industrial steam generating units in the 5th year. The revised standards are projected to reduce baseline NO_X emissions by 23,000 Mg/year (25,800 tons/year) from utility steam generating units and 18,000 Mg/year (20,000 tons/year) from industrial steam generating units in the 5th year after proposal. This represents an approximate 42 percent reduction in the growth of NO_X emissions from new utility and industrial steam generating units subject to these revised standards.

National secondary impacts for increased NH_3 emissions are estimated to be about 300 tons/year from utility steam generating units and about 420 tons/year from industrial steam generating units due to the NH_3 slip from SCR or SNCR systems. Ammonia slip tends to be higher from SNCR systems.

There are additional energy requirements associated with SCR systems. Electrical energy is required for booster fans used to overcome the pressure drop across the SCR reactor and related ductwork. This energy requirement is estimated at about 0.4 percent of the boiler output (and was not specifically incorporated into the determination of the baseline operating efficiency of 38 percent).

The goal of the economic impact analysis was to estimate the market response to the proposed changes to the existing standards for NO_X emissions for both utility and industrial steam generating units. The analysis did not quantitatively address the possibility of changing technology, fuel, or capacity utilization in response to the proposed revisions. Therefore, costs and projected impacts may be overestimated.

For utilities, cost estimates for affected facilities expected to be built between 1996 and 2000 were used to project year by year price and quantity changes. The price changes were estimated by assuming that the production weighted average cost changes for the entire industry are passed on to consumers. These estimates resulted in price increases of between 0.01 percent in 1996 and 0.02 percent in 2000. Because the demand for electricity is inelastic, these price changes are projected to result in 0.002 percent (1996) and 0.004 percent (2000) decreases in electricity sales. These numbers are quite small on an industry-wide basis. The price changes on a facility basis, if the cost were completely passed on to the consumer, would be as high as 6 percent; 9 of the 13 facilities would be 1 percent or less. Because the rate structure of utilities generally has reflected the average costs for a utility which includes multiple facilities, such a price increase is unlikely. Therefore, the market impacts for electricity generation are estimated to be small.

For industrial boilers, data by industry for fuel type, furnace type, capacity, and capacity utilization were combined with projections of boiler sales to estimate the number and type of boilers to be replaced. The analysis assumes that a boiler will be replaced with a boiler of the same fuel type, technology, capacity, and capacity utilization. The analysis modeled the response of a firm faced with an added pollution control cost for boiler replacement as a decision concerning the timing of the replacement. The firm replaces an existing boiler when operating costs have increased enough to make the installation of a new boiler cheaper than continuing to operate the old boiler. Added pollution control costs for a new boiler leads the firm to defer the replacement of the existing boiler until the increased cost of operation makes replacement even with the additional pollution control costs the cheaper option. The average replacement delay was very long for small, low-capacity utilization boilers requiring control. Replacement delay may be viewed as an indicator of the severity of impact. For these boilers, the assumption that they will be replaced by a boiler of the same type, size, fuel type, and capacity utilization is questionable in the absence of the proposed revision and even more unlikely in the face of the proposed revision that would add to the cost of small, low-capacity utilization boilers. For affected boilers, the annual compliance cost as a share of annual steam costs ranges from 3 percent for the largest high-capacity utilization residual oil boiler to over 100 percent for the smallest low-capacity utilization spreader stoker boilers.

For industrial boilers, net additions to steam capacity were also estimated. The U.S. Department of Energy's Industrial Demand Module of the National Energy Modeling System (NEMS) was used with U.S. Department of Commerce projections to estimate steam demand through 2010. The yearly increase in demand for steam for each industry corresponds to the required new steam generating capacity needed. The new generating capacity is assumed to reflect estimates of the existing distribution of boilers for that industry by fuel, furnace type, furnace size, and capacity utilization. This leads to an estimate of new capacity affected by the proposed changes in the standards, which ranges from 45 percent for primary metals to 51 percent for paper. The control costs are small for the affected portion of each industry compared to the size of value of shipments for the affected portion. These percentages range from 0.002 percent for miscellaneous manufacturing to 0.8 percent for the paper industry.

The annualized social costs estimated in the economic impact analysis include costs of more stringent control for projected new utility boilers, industrial replacement boilers, and additions to industrial boiler net capacity. For the utility boilers, the estimated cost is $40 million which includes both the control cost ($39 million) and a loss to consumers because of reduced electricity purchases ($1 million). The cost of replacing industrial boilers ($26

million) includes both the higher cost associated with delaying replacement and the higher control cost after replacement. Estimated control costs for projected net new boiler capacity is $49 million. Because of the number of markets involved, no estimates of market changes were made for industries affected by the proposed revision. Therefore, the losses to consumers from reduced purchases of the final goods due to increased costs of steam from industrial boilers were not developed. The assumptions that replacement industrial boilers would be the same as the boilers they replace in the absence of the proposed revisions and that no affected boilers would respond to the proposed revision by changing size, fuel, type, or capacity utilization of affected boilers lead to higher cost estimates. Impacts on fuel markets such as coal are not quantified.

VII. Request for Comments

The Administrator requests comments on all aspects of the proposed revisions. All significant comments received will be considered in the development and selection of the final revisions. The EPA specifically solicits comment on whether, and on what basis, the output-based standard being proposed for electric utility steam generating units under subpart Da should be applied to industrial steam generating units under subpart Db to promote energy efficiency. The EPA recognizes that there are a multitude of applications for which industrial units provide steam, such as basic plant heating and air conditioning, drying, process heating, etc. In addition, industrial units often supply steam for more than one application. As such, the net efficiency of industrial steam generating units can cover a wide range depending on what fraction of the energy delivered to the process actually is used. Unlike utility applications, many industrial applications utilize the heat of condensation. Thus, industrial units would have a much higher net efficiency than a utility application (e.g., 38 percent). Therefore, the output-based standard, as proposed for subpart Da, would be inappropriate for industrial units.

Consequently, the EPA specifically requests comments and information on: (1) how to encourage energy efficiency in industrial applications; (2) whether an output-based format should be applied to industrial steam generating units; (3) the range of net efficiencies applicable to various industrial applications; (4) whether a generic or separate output-based standards should be developed for different industrial applications; (5) the appropriate baseline efficiency; and (6) how the net efficiency of an industrial unit should be determined. For example, the comments might outline the mechanisms or approaches used by industrial facilities to determine the efficiency of various process applications or what fraction of the energy delivered to the process is actually used. Specific comments are requested from all interested parties including State agencies, Federal agencies, environmental groups, industry associations, and individual citizens. Written comments must be addressed to the Air Docket Section address given in the **ADDRESSES** section of this preamble, and must refer to Docket No. A–92–71.

VIII. Administrative Requirements

A. Public Hearing

A public hearing will be held, if requested, to discuss the proposed revisions in accordance with section 307(d)(5) of the Clean Air Act. Persons wishing to make oral presentations on the proposed revisions should contact EPA at the address given in the **ADDRESSES** section of this preamble. Oral presentations will be limited to 15 minutes each. Any member of the public may file a written statement before, during, or within 30 days after the hearing. Written statements must be addressed to the Air Docket Section address given in the **ADDRESSES** section of this preamble, and must refer to Docket No. A–92–71.

A verbatim transcript of the hearing and written statements will be available for public inspection and copying during normal working hours at the EPA's Air Docket Section in Washington, D.C. (see **ADDRESSES** section of this preamble).

B. Docket

The docket is an organized and complete file of all the information submitted to, or otherwise considered by, EPA in the development of this proposed rulemaking. The principal purposes of the docket are: (1) to allow interested parties to readily identify and locate documents so that they can intelligently and effectively participate in the rulemaking process, and (2) to serve as the record in case of judicial review (except for interagency review materials).

C. Clean Air Act Procedural Requirements

1. Administrator's Listing—Section 111

As prescribed by section 111(b)(1)(A) of the Act, establishment of standards of performance for electric utility steam generating units and industrial-commercial-institutional steam generating units was preceded by the Administrator's determination that these sources contribute significantly to air pollution which may reasonably be anticipated to endanger public health or welfare.

2. Periodic Review—Section 111

This regulation will be reviewed again 8 years from the date of promulgation of any revisions to the standard resulting from this proposal as required by the Act. The review will include an assessment of the need for integration with other programs, enforceability, improvements in emission control technology, and reporting requirements.

3. External Participation—Section 117

In accordance with section 117 of the Act, publication of this review was preceded by consultation with independent experts. The Administrator will welcome comments on all aspects of the proposed revisions, including economic and technical issues.

4. Economic Impact Analysis—Section 317

Section 317 of the Act requires the EPA to prepare an economic impact assessment for any emission standards under section 111 of the Act. An economic impact assessment was prepared for the proposed revision to the standards. In the manner described above under the discussions of the impacts of, and rationale for, the proposed revision to the standards, the EPA considered all aspects of the assessments in proposing the revision to the standards. The economic impact assessment is included in the docket listed at the beginning of today's notice under **SUPPLEMENTARY INFORMATION.**

D. Office of Management and Budget Reviews

1. Paperwork Reduction Act

The proposed revisions contain no changes to the information collection requirements of the current NSPS. Those requirements were previously submitted for approval by the Office of Management and Budget (OMB) during the original development of the NSPS.

2. Executive Order 12866

Under Executive Order 12866 (58 FR 51735, Oct. 4, 1994), the Agency must determine whether the regulatory action is ''significant'' and, therefore, subject to OMB review and the requirements of the Executive Order. The Order defines ''significant'' regulatory action as one that is likely to lead to a rule that may: (1) have an annual effect on the

economy of $100 million or more, or adversely and materially affecting a sector of the economy, productivity, competition, jobs, the environment, public health or safety, or State, local, or tribal governments or communities; (2) create a serious inconsistency or otherwise interfere with an action taken or planned by another agency; (3) materially alter the budgetary impact of entitlements, grants, user fees, or loan programs or the rights and obligation of recipients thereof; (4) raise novel legal or policy issues arising out of legal mandates, the President's priorities, or the principles set forth in the Executive Order.

Pursuant to the terms of Executive Order 12866, EPA has determined that this rule is a ''significant regulatory action'' because this action may have an annual effect on the economy of $100 million or more. As such, this action was submitted to OMB for review. Changes made in response to OMB suggestions or recommendations will be documented in the public record.

3. Regulatory Flexibility Act

The Regulatory Flexibility Act (RFA) requires EPA to give special consideration to the impact of regulation on small businesses, small organizations, and small governmental units. The major purpose of the RFA is to keep paperwork and regulatory requirements from getting out of proportion to the scale of the entities being regulated, without compromising the objectives of, in this case, the Clean Air Act. The RFA specifies that EPA must prepare an initial regulatory flexibility analysis if a proposed regulation will have a significant economic impact on a substantial number of small entities. The Agency certifies that the rule will not have a significant impact on a substantial number of small entities.

Firms in the electric services industry (SIC 4911) are classified as small by the U.S. Small Business Administration if the firm produces less than four million megawatts a year. For the time period of the analysis (1996 to 2000) one projected new utility boiler may be affected and small. Of the 13 projected new utility boilers, 10 are known to not be small, and 2 of the remaining 3 are not expected to incur additional control costs due to the regulation. The size of the owning entity is unknown for the remaining utility boiler. That boiler also has the smallest cost in mills/kwh (0.07) of the 11 projected units to have additional control costs. Therefore, no significant small business impacts are anticipated for the utility boilers.

Regarding industrial boilers, EPA expects that some small businesses may face additional pollution control costs. It is difficult to project the number of industrial steam generating units that will both incur control costs under the regulation and be owned by a small entity. Since the rule only affects new sources, and plans for new industrial boilers are not available (as they are for electric utilities), linking new projected boilers to size of owning entity is difficult. The projection of 381 new boilers has 293 of the boilers incurring no costs because they are projected to be either gas-fired or distillate-oil-fired units that would require no additional control. Some of the 88 remaining boilers which are projected to incur costs in complying with the regulation may be owned by small entities. The size of the owning entity and the size of the boiler are not related in any simple way, but smaller entities may be more likely to have a smaller boiler. The proposed applicability size cut off of 100 million Btu/hour heat input for industrial boilers would be expected to result in fewer small entities being affected. Since only 88 industrial boilers are expected to incur any costs and many of them are likely to be owned by large entities, EPA projects that fewer than 88 of these boilers will be owned by small entities.

The information used for economic impact analysis for the proposed rule matches boiler size and fuel type to various industries. These data overestimate the share of boilers that are residual-oil-fired and coal-fired, but the data are nonetheless useful for estimating the potential economic impact of the rule on small entities in terms of cost-to-sales ratio. This analysis estimates costs as a percent of value of shipments (closely related to sales) for affected facilities. The average control cost as a percentage of value of shipments for all affected facilities is .07 percent. The range of average control cost across industries varies from a low of .004 percent for primary metals to a high of .8 percent for the paper industry. Although the cost varies by industry, boiler size, and fuel, it is unlikely that any affected small entities will have a control cost to sales ratio of greater than one percent. Based on these estimates, EPA certifies that the rule will not have a significant impact on a substantial number of small entities.

4. Unfunded Mandates Act of 1995

Under section 202 of the Unfunded Mandates Reform Act of 1995 (''Unfunded Mandates Act''), signed into law on March 22, 1995, EPA must prepare a statement to accompany any proposed rule where the estimated costs to State, local, or tribal governments, or to the private sector, will be $100 million or more in any one year. Under section 205, EPA must select the most cost-effective, least costly, or least burdensome alternative that achieves the objective of the rule and is consistent with statutory requirements. Section 203 requires EPA to establish a plan for informing and advising any small governments that may be significantly impacted by the rule.

The unfunded mandates statement under section 202 must include: (1) a citation of the statutory authority under which the rule is proposed; (2) an assessment of the costs and benefits of the rule, including the effect of the mandate on health, safety and the environment, and the federal resources available to defray the costs; (3) where feasible, estimates of future compliance costs and disproportionate impacts upon particular geographic or social segments of the nation or industry; (4) where relevant, an estimate of the effect on the national economy; and, (5) a description of EPA's prior consultation with State, local, and tribal officials.

Since this proposed rule is estimated to impose costs to the private sector in excess of $100 million, EPA has prepared the following statement with respect to these impacts.

a. Statutory authority.

The statutory authority for this rulemaking is identified and described in Sections I and VII of the preamble. As required by section 205 of the Unfunded Mandates Act, and as described more fully in Section III of this preamble, EPA has chosen to propose a rule that is the least burdensome alternative for regulation of these sources that meets the statutory requirements under the Act.

b. Costs and benefits.

As described in section VI of the preamble, the estimate of annual social cost for the regulation is $40 million for utility boilers and $41 million for industrial boilers in the year 2000. Certain simplifying assumptions, such as no fuel switching in response to the proposed rule, may have resulted in a significant overestimation of these costs.

The pollution control costs will not impose direct costs for State, local, and tribal governments. Indirectly, these entities face increased costs in the form of higher prices for electricity and the goods produced in the facilities requiring new industrial boilers that would be subject to this proposed rule. There are no federal funds available to assist State, local, or tribal governments with these indirect costs.

Because this regulation affects boilers as they are constructed (or modified), the emission reductions attributable to the regulation increase year by year until all existing boilers have been replaced. In the year 2000, the NO_X emission reduction relative to the baseline for utility boilers is estimated to be 26,000 tons per year. In the year 2000, the NO_X emission reduction relative to the baseline for industrial boilers that represent net additions to existing capacity is estimated to be 20,000 tons per year. Emissions reductions from replacement boilers are not quantified because of difficulties in characterizing emission rates for the boilers being replaced and the inability of the replacement model to predict selection of different types of boilers in both the baseline case and in response to the proposed regulation. A qualitative analysis of industrial boiler replacement raises the possibility that replacement delay due to the proposed revision may keep some boilers continuing to emit at a higher level than they would in the baseline case where they would be replaced by a lower emitting boiler.

Reducing emissions of NO_X has the potential to benefit society in a number of ways. Emissions of NO_X result in a wide range of damages, ranging from human health effects to impacts on ecosystems. They not only contribute to ambient levels of potentially harmful nitrogen compounds, but they also have important precursor effects. In combination with volatile organic compounds (VOCs), they contribute to the formation of ground level ozone. Along with emissions of sulfur oxides, they are also precursors to particulate matter and acidic deposition.

See Table 5 for a summary of linkages between NO_X emissions and damage categories.

TABLE 5.—LINKAGES BETWEEN NO_X Emissions and Damage Categories: Strength of the Evidence

	Direct effects	Precursor effects		
	Ambient NO_X levels	Ambient ozone levels	Ambient particulate matter	Acid deposition
Human Health:				
Acute Morbidity	✔✔✔	✔✔✔	✔✔✔	✔
Chronic Morbidity	✔✔	✔	✔✔✔	.....
Mortality	.....	✔	✔✔✔	.....
Ecosystems:				
Terrestrial	✔✔[1]	✔✔	✔✔	
Aquatic	✔✔	.....	.....	✔✔✔
Commercial Biological Systems:[2]				
Agriculture	✔	✔✔✔	.....	.....
Forestry	.....	✔✔	.....	✔
Visibility	✔✔	.....	✔✔✔	.....
Materials	✔✔✔	.....	✔✔✔	.....

✔=weak evidence.
✔✔=limited evidence.
✔✔✔=strong evidence.
[1] Evidence indicates that NO_X can have both positive and negative effects in this category.
[2] Evidence for this category relates specifically to certain commercial crop or tree types rather than to the more general terrestrial damages that are covered in the separate ecosystems category.

Benefits are only qualitatively addressed in the regulatory impacts analysis (RIA) because of difficulties in physically locating the not yet built boilers and translating their emission reductions into changes in ambient concentrations of nitrogen compounds, ozone concentrations, and particulate matter concentrations.

c. Future and disproportionate costs.

The rule is not expected to have any disproportionate budgetary effects on any particular region of the nation, any State, local, or tribal government, or urban or rural or other type of community. Only very small increases in electricity prices are estimated. See section VII C. 4 of the preamble for more detail.

d. Effects on national economy.

Significant effects on the national economy from this proposed rule are not anticipated. See section VIII C. 4 of the preamble for more detail.

e. Consultation with government officials.

The Unfunded Mandates Act requires that EPA describe the extent of the Agency's prior consultation with affected State, local, and tribal officials, summarize the officials' comments or concerns, and summarize EPA's response to those comments or concerns. In addition, section 203 of the Act requires that EPA develop a plan for informing and advising small governments that may be significantly or uniquely impacted by a proposal.

In the development of this rule, the EPA has provided small governments (State, local, and tribal) the opportunity to comment on this regulatory program. A fact sheet which summarized the regulatory program, the control options being considered, preliminary revisions, and the projected impacts was forwarded to seven trade associations representing State, local, and tribal governments. A meeting was held for interested parties to discuss and provide comments on the program. Written comments also were requested. The main comments received dealt with the need to consider the impacts of the revisions on small units and facilities. Commenters also stated that the requirement for an integrated resource plan is unnecessary and burdensome for small operators and may constitute an unfunded mandate. In response to this concern, EPA removed the requirement for an integrated resource plan from this rulemaking. In response to the concern regarding the cost impacts on small industrial steam generating units, EPA is proposing a higher NO_X emission limit for industrial units than it is proposing today for utility units. The revised limit for industrial units effectively results in no additional controls for gas and distillate oil-fired industrial units over that required to comply with the current emission limits. As described in sections VIII D.3 and D.4.c of the preamble, the impacts on small businesses and governments have been analyzed and indicate that small governments are not significantly

impacted by this rule and thus no plan is required.

F. Miscellaneous

List of Subjects in 40 CFR Part 60

Environmental protection, Air pollution control, Intergovernmental relations, Incorporation by reference, Reporting and recordkeeping requirements, Electric utility steam generating units, Industrial-commercial-institutional steam generating units.

Statutory Authority

The statutory authority for this proposal is provided by sections 101, 111, 114, 301, and 407 of the Clean Air Act, as amended; 42 U.S.C. 7401, 7411, 7414, 7601, and 7651f.

Dated: July 1, 1997.

Carol M. Browner,

Administrator.

40 CFR part 60 is proposed to be amended as follows:

PART 60—[AMENDED]

1. The authority citation for part 60 continues to read as follows:

Authority: 42 U.S.C. 7401, 7411, 7413, 7414, 7416, 7601, and 7602.

Subpart Da—[Amended]

2. Section 60.41a is amended by adding a definition for ''Net output'' in alphabetical order to read as follows:

§ 60.41a Definitions.

* * * * *

Net output means the net useful work performed by the steam generated taking into account the energy requirements for auxiliaries and emission controls. For units generating only electricity, the net useful work performed is the net electrical output (i.e., net busbar power leaving the plant) from the turbine/generator set. For cogeneration units, the net useful work performed is the net electrical output plus one half the useful thermal output (i.e., steam delivered to an industrial process).

* * * * *

3. Section 60.44a is amended by revising paragraphs (a) introductory text, and (c) and by adding paragraph (d) to read as follows:

§ 60.44a Standard for nitrogen oxides.

(a) On and after the date on which the initial performance test required to be conducted under § 60.8 is completed, no owner or operator subject to the provisions of this subpart shall cause to be discharged into the atmosphere from any affected facility, except as provided under paragraphs (b) and (d) of this section, any gases which contain nitrogen oxides in excess of the following emission limits, based on a 30-day rolling average.

* * * * *

(c) Except as provided in paragraph (d) of this section, when two or more fuels are combusted simultaneously, the applicable standard is determined by proration using the following formula:

$$E_n = [86w+130x+210y+260z+340v]/100$$

Where:

E_n is the applicable standard for nitrogen oxides when multiple fuels are combusted simultaneously (ng/J heat input);

w is the percentage of total heat input derived from the combustion of fuels subject to the 86 ng/J heat input standard;

x is the percentage of total heat input derived from the combustion of fuels subject to the 130 ng/J heat input standard;

y is the percentage of total heat input derived from the combustion of fuels subject to the 210 ng/J heat input standard;

z is the percentage of total heat input derived from the combustion of fuels subject to the 260 ng/J heat input standard;

v is the percentage of total heat input derived from the combustion of fuels subject to the 340 ng/J heat input standard;

(d) On and after the date on which the initial performance test required to be conducted under § 60.8 is completed, no owner or operator subject to the provisions of this subpart shall cause to be discharged into the atmosphere from any affected facility for which construction, modification, or reconstruction commenced after July 9, 1997 any gases which contain nitrogen oxides in excess of 170 nanograms per joule (1.35 pounds per megawatt-hour) net energy output.

4. Section 60.47a is amended by adding paragraph (k) to read as follows:

§ 60.47a Emission monitoring.

* * * * *

(k) The procedures specified in paragraphs (k)(1) through (k)(3) of this section shall be used to determine compliance with the output-based standard under § 60.44a(d).

(1) The owner or operator of an affected facility with electricity generation shall install, calibrate, maintain, and operate a wattmeter; measure net electrical output in megawatt-hour on a continuous basis; and record the output of the monitor.

(2) The owner or operator of an affected facility with process steam generation shall install, calibrate, maintain, and operate meters for steam flow, temperature, and pressure; measure net process steam output in joules per hour (or Btu per hour) on a continuous basis; and record the output of the monitor.

(3) For affected facilities generating process steam in combination with electrical generation, the net energy output is determined from the net electrical output measured in paragraph (k)(1) of this section plus 50 percent of the net thermal output of the process steam measured in paragraph (k)(2) of this section.

5. Section 60.49a is amended by revising paragraph (i) and adding paragraph (j) to read as follows:

§ 60.49a Reporting requirements.

* * * * *

(i) Except as provided in paragraph (j) of this section, the owner or operator of an affected facility shall submit the written reports required under this section and subpart A to the Administrator for every calendar quarter. All quarterly reports shall be postmarked by the 30th day following the end of each calendar quarter.

(j) The owner or operator of an affected facility may submit electronic quarterly reports for SO_2 and/or NO_X and/or opacity in lieu of submitting the written reports required under paragraphs (b) and (h) of this section. The format of each quarterly electronic report shall be consistent with the electronic data reporting format specified by the Administrator under § 75.64 (d) of this chapter. The electronic report(s) shall be submitted no later than 30 days after the end of the calendar quarter and shall be accompanied by a certification statement from the owner or operator, indicating whether compliance with the applicable emission standards and minimum data requirements of this subpart was achieved during the reporting period.

Subpart Db—[Amended]

6. Section 60.44b is amended by revising paragraphs (a) introductory text, (b) introductory text, (c), and (e) introductory text and by adding paragraph (l) to read as follows:

§ 60.44b Standard for nitrogen oxides.

(a) Except as provided under paragraphs (k) and (l) of this section, on and after the date on which the initial performance test is completed or is required to be completed under § 60.8 of this part, whichever date comes first, no owner or operator of an affected facility that is subject to the provisions of this section and that combusts only coal, oil,

or natural gas shall cause to be discharged into the atmosphere from that affected facility any gases that contain nitrogen oxides (expressed as NO_2) in excess of the following emission limits:

* * * * *

(b) Except as provided under paragraphs (k) and (l) of this section, on and after the date on which the initial performance test is completed or is required to be completed under § 60.8 of this part, whichever date comes first, no owner or operator of an affected facility that simultaneously combusts mixtures of coal, oil, or natural gas shall cause to be discharged into the atmosphere from that affected facility any gases that contain nitrogen oxides in excess of a limit determined by use of the following formula:

* * * * *

(c) Except as provided under paragraph (l) of this section, on and after the date on which the initial performance test is completed or is required to be completed under § 60.8 of this part, whichever comes first, no owner or operator of an affected facility that simultaneously combusts coal or oil, or a mixture of these fuels with natural gas, and wood, municipal-type solid waste, or any other fuel shall cause to be discharged into the atmosphere any gases that contain nitrogen oxides in excess of the emission limit for the coal or oil, or mixtures of these fuels with natural gas combusted in the affected facility, as determined pursuant to paragraph (a) or (b) of this section, unless the affected facility has an annual capacity factor for coal or oil, or mixture of these fuels with natural gas of 10 percent (0.10) or less and is subject to a federally enforceable requirement that limits operation of the facility to an annual capacity factor of 10 percent (0.10) or less for coal, oil, or a mixture of these fuels with natural gas.

* * * * *

(e) Except as provided under paragraph (l) of this section, on and after the date on which the initial performance test is completed or is required to be completed under § 60.8 of this part, whichever date comes first, no owner or operator of an affected facility that simultaneously combusts coal, oil, or natural gas with byproduct/waste shall cause to be discharged into the atmosphere from that affected facility any gases that contain nitrogen oxides in excess of an emission limit determined by the following formula unless the affected facility has an annual capacity factor for coal, oil, and natural gas of 10 percent (0.10) or less and is subject to a federally enforceable requirement which limits operation of the affected facility to an annual capacity factor of 10 percent (0.10) or less:

* * * * *

(l) On and after the date on which the initial performance test is completed or is required to be completed under § 60.8 of this part, whichever date comes first, no owner or operator of an affected facility which commenced construction, modification, or reconstruction after July 9, 1997 shall cause to be discharged into the atmosphere from that affected facility any gases that contain nitrogen oxides (expressed as NO_2) in excess of the following limits:

(1) If the affected facility combusts coal, oil, or natural gas, or a mixture of these fuels, or with any other fuels: a limit of 86 ng/J (0.20 lb/million Btu) heat input; or

(2) If the affected facility has a low heat release rate and combusts natural gas or distillate oil in excess of 30 percent of the heat input from the combustion of all fuels, a limit determined by use of the following formula:

$$E_n = [(0.10 * H_{go})+(0.20 * H_r)]/(H_{go}+H_r)$$

Where:

E_n is the NO_X emission limit, (lb/million Btu),

H_{go} is the heat input from combustion of natural gas or distillate oil, and

H_r is the heat input from combustion of any other fuel.

7. Section 60.49b is amended by adding paragraph (u) to read as follows:

§ 60.49b Reporting and recordkeeping requirements.

* * * * *

(u) The owner or operator of an affected facility may submit electronic quarterly reports for SO_2 and/or NO_X and/or opacity in lieu of submitting the written reports required under paragraphs (h), (i), (j), (k) or (l) of this section. The format of each quarterly electronic report shall be consistent with the electronic data reporting format specified by the Administrator under § 75.64(d) of this chapter. The electronic report(s) shall be submitted no later than 30 days after the end of the calendar quarter and shall be accompanied by a certification statement from the owner or operator, indicating whether compliance with the applicable emission standards and minimum data requirements of this subpart was achieved during the reporting period.

[FR Doc. 97–17950 Filed 7–8–97; 8:45 am]

BILLING CODE 6560–50–P

Reader Aids

Federal Register

Vol. 62, No. 131

Wednesday, July 9, 1997

CUSTOMER SERVICE AND INFORMATION

Federal Register/Code of Federal Regulations

General Information, indexes and other finding aids **202–523–5227**

Laws

For additional information **523–5227**

Presidential Documents

Executive orders and proclamations **523–5227**

The United States Government Manual **523–5227**

Other Services

Electronic and on-line services (voice) **523–4534**

Privacy Act Compilation **523–3187**

TDD for the hearing impaired **523–5229**

ELECTRONIC BULLETIN BOARD

Free **Electronic Bulletin Board** service for Public Law numbers, Federal Register finding aids, and list of documents on public inspection. **202–275–0920**

FAX-ON-DEMAND

You may access our Fax-On-Demand service. You only need a fax machine and there is no charge for the service except for long distance telephone charges the user may incur. The list of documents on public inspection and the daily Federal Register's table of contents are available using this service. The document numbers are 7050-Public Inspection list and 7051-Table of Contents list. The public inspection list will be updated immediately for documents filed on an emergency basis.

NOTE: YOU WILL ONLY GET A LISTING OF DOCUMENTS ON FILE AND NOT THE ACTUAL DOCUMENT. Documents on public inspection may be viewed and copied in our office located at 800 North Capitol Street, N.W., Suite 700. The Fax-On-Demand telephone number is: **301–713–6905**

FEDERAL REGISTER PAGES AND DATES, JULY

35337–35658 1
35659–35946 2
35947–36198 3
36199–36446 7
36447–36644 8
36645–36964 9

CFR PARTS AFFECTED DURING JULY

At the end of each month, the Office of the Federal Register publishes separately a List of CFR Sections Affected (LSA), which lists parts and sections affected by documents published since the revision date of each title.

3 CFR

Proclamations:
6641 (See Proclamation 7011) 35909
6763 (See Proclamation 7011) 35909
7011 35909

Executive Orders:
12852 (Amended by EO 13053) 39945
13052 35659
13053 39945

5 CFR

7201 36447

Proposed Rules:
880 35693

7 CFR

301 36645
455 .....35661, 35662
456 35666
457 .....35662, 35666
946 36199
985 36646
1006 36650
1137 35947
1381 36651

Proposed Rules:
29 35452
920 .....36231, 36743
930 36020
981 36233
985 36236
1011 36022
1944 36467

8 CFR

316 36447

10 CFR

Proposed Rules:
430 36024
451 36025

11 CFR

104 35670

12 CFR

902 35948
338 36201

Proposed Rules:
9 36746

13 CFR

123 35337

14 CFR

39 .....35670, 35950, 35951, 35953, 35956, 35957, 35959, 36448, 36652
71 35894

Proposed Rules:
39 .....35696, 35698, 35700, 35702, 35704, 35706, 35708, 35709, 35711, 36240, 36747
71 35713
401 36027
411 36027
413 36027
415 36027
417 36027
440 36028

15 CFR

922 .....35338, 36655

Proposed Rules:
30 36242

16 CFR

601 35586
1000 36450
1017 36450

17 CFR

200 36450
228 36450
229 36450
230 36450
232 36450
239 .....35338, 36450
240 .....35338, 36450
249 35338
260 36450
269 35338

Proposed Rules:
232 36467
240 36467
249 36467

18 CFR

35 36657

20 CFR

416 36460

Proposed Rules:
702 35715

21 CFR

165 36460

Proposed Rules:
Ch. I 36243
101 36749

24 CFR

Proposed Rules:
201 36194
202 36194
207 35716
251 35716
252 35716

255....35716
266....35716
950....35718
953....35718
955....35718
1000....35718
1003....35718
1005....35718

26 CFR

1....35673
54....35904
602....35904
Proposed Rules:
1....35752, 35755

29 CFR

1600....36447
1650....36447
2200....35961
2203....35961
2204....35961
2520....36205
2590....35904
4001....35342
4007....36663

30 CFR

902....35342
946....35964
Proposed Rules:
206....36030
935....36248

31 CFR

285....36205
Proposed Rules:
103....36475

32 CFR

176....35343
286....35351

33 CFR

27....35385
100....35387, 35388, 35390, 35391
144....35392
165....35392, 35393, 35394, 35395, 35396, 35398, 335398, 35399, 35400, 35401, 35402, 35403, 35405, 35680, 35968
Proposed Rules:
84....36037
117....35453

34 CFR

222....35406
685....35602

37 CFR

201....35420
202....35420
203....35420

38 CFR

1....35969
3....35421, 35969, 35970
9....35969
21....35423
Proposed Rules:
19....36038
21....35454, 35464

39 CFR

3001....35424

40 CFR

52....35441, 35681, 36212, 36214
60....36664
63....36460
81....35972
180....35683, 36665, 36671, 36678, 36684, 36691
281....36698
300....35441, 35689, 35974
721....35689, 35690
Proposed Rules:
52....35756, 36249
60....36948
70....36039
82....36428
141....36100
142....36100
180....35760
186....35760

45 CFR

146....35904
148....35904

46 CFR

109....35392
159....35392
160....35392
199....35392

47 CFR

Ch. I....36216
64....35974
68....36463
73....36226, 36227, 36699, 36700, 36701, 36678, 36684, 36691
Proposed Rules:
Ch. I....36752
52....36476
68....36476
73....36250, 36756

48 CFR

1803....36704
1804....36704
1807....36704
1809....36704
1813....36704
1815....36704
1816....36704
1819....36704
1822....36704
1824....36704
1825....36704
1827....36704
1832....36704
1836....36704
1837....36704
1839....36704
1842....36227,
1844....36704
1845....36704
1852....36704
1853....36704
1870....36704
Proposed Rules:
4....36250
7....36250
8....36250
15....36250
16....36250
17....36250
22....36250
27....36250
28....36250
31....35900, 36250
32....36250
35....36250
42....36250
43....36250
44....36250
45....36250
46....35900
49....36250
51....36250
52....35900, 36250
53....36250

49 CFR

193....36465
1002....35692
1180....35692
Proposed Rules:
213....36138
385....36039
571....36251
1002....36477
1181....36480
1182....36477, 36480
1186....36480
1187....36477
1188....36477, 36480

50 CFR

17....36481, 36482
285....35447
648....36704, 36738
660....35450, 36228
679....36018, 36739, 36740, 36741
Proposed Rules:
17....35762
285....36040, 36739, 36872
600....35468
622....35774

REMINDERS

The items in this list were editorially compiled as an aid to Federal Register users. Inclusion or exclusion from this list has no legal significance.

RULES GOING INTO EFFECT JULY 9, 1997

AGRICULTURE DEPARTMENT

Animal and Plant Health Inspection Service

Plant-related quarantine, domestic:

Gypsy moth; published 7-9-97

Viruses, serums, toxins, etc.:

Biological products and guidelines; definitions; published 6-9-97

Clostridium perfringens Types C and D toxoids and bacterin-toxoids; standard requirements; published 6-9-97

ENVIRONMENTAL PROTECTION AGENCY

Air quality implementation plans; approval and promulgation; various States:

Pennsylvania; published 6-9-97

Utah; published 6-9-97

Pesticides; tolerances in food, animal feeds, and raw agricultural commodities:

Fomesafen; published 7-9-97

Imidacloprid; published 7-9-97

Lambda-cyhalothrin; published 7-9-97

Myclobutanil; published 7-9-97

HEALTH AND HUMAN SERVICES DEPARTMENT

Food and Drug Administration

Food for human consumption:

Food labeling—

Nutrient content claim; use of term ≥plus≥ as synonym for ≥added≥; published 6-9-97

NATIONAL AERONAUTICS AND SPACE ADMINISTRATION

Acquisition regulations:

FAR supplement (NFS); rewrite; published 7-9-97

PERSONNEL MANAGEMENT OFFICE

Employment:

Surplus and displaced Federal employees; career transition assistance programs development; published 6-9-97

Correction; published 6-26-97

COMMENTS DUE NEXT WEEK

AGRICULTURE DEPARTMENT

Federal Crop Insurance Corporation

Common crop insurance regulations:

Tobacco; comments due by 7-16-97; published 6-16-97

AGRICULTURE DEPARTMENT

Farm Service Agency

Program regulations:

Boll Weevil eradication loan program; implementation; comments due by 7-15-97; published 5-16-97

AGRICULTURE DEPARTMENT

Food Safety and Inspection Service

Meat and poultry inspection:

Sodium acetate and sodium diacetate use as flavoring agents; comments due by 7-18-97; published 6-23-97

AGRICULTURE DEPARTMENT

Rural Utilities Service

Telecommunications systems construction policies and procedures:

Digital, stored program controlled central office equipment; acceptance test policy; comments due by 7-16-97; published 6-16-97

COMMERCE DEPARTMENT

National Oceanic and Atmospheric Administration

Fishery conservation and management:

Alaska; fisheries of Exclusive Economic Zone—

At-sea scale certification program; comments due by 7-16-97; published 6-16-97

Ice and slime standard allowances for unwashed Pacific halibut and sablefish; comments due by 7-17-97; published 6-17-97

DEFENSE DEPARTMENT

Civilian health and medical program of uniformed services (CHAMPUS):

TRICARE selected reserve dental program (TSRDP); comments due by 7-15-97; published 5-16-97

Federal Acquisition Regulation (FAR):

Contracting by negotiation; Phase I rewrite; comments due by 7-14-97; published 5-14-97

ENERGY DEPARTMENT

Energy Efficiency and Renewable Energy Office

Energy conservation:

New Federal residential buildings; energy efficiency code; comments due by 7-14-97; published 5-2-97

ENVIRONMENTAL PROTECTION AGENCY

Air pollutants, hazardous; national emission standards:

Secondary lead smelters, new and existing; comments due by 7-14-97; published 6-13-97

Air quality implementation plans; approval and promulgation; various States:

California; comments due by 7-17-97; published 6-17-97

Illinois; comments due by 7-17-97; published 6-17-97

Michigan; comments due by 7-14-97; published 6-12-97

South Carolina; comments due by 7-16-97; published 6-16-97

Tennessee; comments due by 7-17-97; published 6-17-97

Virginia; comments due by 7-14-97; published 6-13-97

Wisconsin; comments due by 7-14-97; published 6-12-97

Pesticides; tolerances in food, animal feeds, and raw agricultural commodities:

Carbon disulfide; comments due by 7-15-97; published 5-16-97

Clopyralid; comments due by 7-15-97; published 5-16-97

Propamocarb hydrochloride; comments due by 7-15-97; published 5-16-97

Pyridaben; comments due by 7-15-97; published 5-16-97

FEDERAL COMMUNICATIONS COMMISSION

Radio stations; table of assignments:

Minnesota et al.; comments due by 7-14-97; published 5-29-97

Missouri; comments due by 7-14-97; published 5-29-97

Television broadcasting:

Advanced television (ATV) systems; digital technology conversion; reporting and recordkeeping requirements; comments due by 7-15-97; published 5-16-97

FEDERAL DEPOSIT INSURANCE CORPORATION

Practice and procedure:

Insured status; notification of changes; comments due by 7-14-97; published 5-14-97

FEDERAL ELECTION COMMISSION

Rulemaking petitions:

Prohibited and excessive contributions; ''soft money''; comments due by 7-18-97; published 6-18-97

FEDERAL RESERVE SYSTEM

Truth in lending (Regulation Z):

Home equity loan market; disclosure requirements and closed-end mortgage loan limitations; hearings; comments due by 7-18-97; published 4-29-97

GENERAL SERVICES ADMINISTRATION

Federal Acquisition Regulation (FAR):

Contracting by negotiation; Phase I rewrite; comments due by 7-14-97; published 5-14-97

HEALTH AND HUMAN SERVICES DEPARTMENT

Food and Drug Administration

GRAS or prior-sanctioned ingredients:

Criteria clarification; comments due by 7-15-97; published 4-17-97

Medical devices:

Medical device corrections and removals; reporting requirements; comments due by 7-18-97; published 5-19-97

HOUSING AND URBAN DEVELOPMENT DEPARTMENT

HUD building products standards and certification program; use of materials bulletins; comments due by 7-18-97; published 5-19-97

HUD-owned properties:
HUD-acquired single family property; disposition; comments due by 7-14-97; published 6-13-97

INTERIOR DEPARTMENT

Indian Affairs Bureau

Contracts and grants:
Indian highway safety program; competitive grant selection criteria; comments due by 7-15-97; published 5-16-97

INTERIOR DEPARTMENT

Fish and Wildlife Service

Endangered and threatened species:
Alexander archipelago wolf etc.; comments due by 7-14-97; published 6-12-97
'oha wai, et al. (ten plant taxa from Maui Nui, Hawaii); comments due by 7-14-97; published 5-15-97

INTERIOR DEPARTMENT

Surface Mining Reclamation and Enforcement Office

Permanent program and abandoned mine land reclamation plan submissions:
Utah; comments due by 7-14-97; published 6-13-97

LABOR DEPARTMENT

Mine Safety and Health Administration

Coal, metal and nonmetal mine safety and health:
Roof and rock bolts and accessories; safety standards; comment period extension; comments due by 7-14-97; published 6-30-97

NATIONAL AERONAUTICS AND SPACE ADMINISTRATION

Federal Acquisition Regulation (FAR):
Contracting by negotiation; Phase I rewrite; comments due by 7-14-97; published 5-14-97

NUCLEAR REGULATORY COMMISSION

Byproduct material; domestic licensing:
Radioactive drugs containing one microcurie of carbon-14 urea; distribution to persons for ≥in vivo≥ diagnostic use; comments due by 7-16-97; published 6-16-97

SECURITIES AND EXCHANGE COMMISSION

Securities:
Securities Act of 1933; section 18 covered securities; comments due by 7-17-97; published 6-17-97

STATE DEPARTMENT

Visas; immigrant documentation:
Diversity immigrant visa program; lottery administration fee; comments due by 7-16-97; published 6-16-97

TRANSPORTATION DEPARTMENT

Coast Guard

Drawbridge operations:
Michigan; comments due by 7-15-97; published 4-18-97

TRANSPORTATION DEPARTMENT

Federal Aviation Administration

Air traffic operating and flight rules:
Fees for air traffic services for certain flights through U.S.-controlled airspace; comments due by 7-18-97; published 3-20-97

Airworthiness directives:
Boeing; comments due by 7-17-97; published 6-6-97
Bombardier; comments due by 7-14-97; published 6-4-97
Raytheon; comments due by 7-18-97; published 5-13-97
Robinson Helicopter Co.; comments due by 7-18-97; published 5-19-97
Twin Commander Aircraft Corp.; comments due by 7-17-97; published 5-9-97

Class E airspace; comments due by 7-14-97; published 5-28-97

TRANSPORTATION DEPARTMENT

National Highway Traffic Safety Administration

Motor vehicle safety standards:
Compressed natural gas fuel containers; comments due by 7-14-97; published 5-30-97

Pilots Records Improvement Act of 1996:
National Driver Register information; procedures for pilots to request and air carriers to receive; comments due by 7-18-97; published 5-19-97

TRANSPORTATION DEPARTMENT

Surface Transportation Board

Contracts and exemptions:
Rail general exemption authority—
Nonferrous recyclables; comments due by 7-15-97; published 5-23-97

Rail licensing procedures:
Commuter rail service continuation subsidies and discontinuance notices; comments due by 7-14-97; published 6-12-97

TREASURY DEPARTMENT

Thrift Supervision Office

Liquidity; comments due by 7-14-97; published 5-14-97