8–13–97
Vol. 62 No. 156
Pages 43269–43452

federal register

Wednesday
August 13, 1997

Briefings on how to use the Federal Register
For information on briefings in Washington, DC and Boston, MA, see the announcement on the inside cover of this issue.

Now Available Online

Code of Federal Regulations

via

GPO Access

(Selected Volumes)

Free, easy, online access to selected *Code of Federal Regulations (CFR)* volumes is now available via *GPO Access*, a service of the United States Government Printing Office (GPO). *CFR* titles will be added to *GPO Access* incrementally throughout calendar years 1996 and 1997 until a complete set is available. GPO is taking steps so that the online and printed versions of the *CFR* will be released concurrently.

The *CFR* and *Federal Register* on *GPO Access*, are the official online editions authorized by the Administrative Committee of the Federal Register.

New titles and/or volumes will be added to this online service as they become available.

http://www.access.gpo.gov/nara/cfr

For additional information on ***GPO Access*** products, services and access methods, see page II or contact the *GPO Access* User Support Team via:

★ Phone: toll-free: 1-888-293-6498

★ Email: gpoaccess@gpo.gov

FEDERAL REGISTER Published daily, Monday through Friday, (not published on Saturdays, Sundays, or on official holidays), by the Office of the Federal Register, National Archives and Records Administration, Washington, DC 20408, under the Federal Register Act (49 Stat. 500, as amended; 44 U.S.C. Ch. 15) and the regulations of the Administrative Committee of the Federal Register (1 CFR Ch. I). Distribution is made only by the Superintendent of Documents, U.S. Government Printing Office, Washington, DC 20402.

The Federal Register provides a uniform system for making available to the public regulations and legal notices issued by Federal agencies. These include Presidential proclamations and Executive Orders and Federal agency documents having general applicability and legal effect, documents required to be published by act of Congress and other Federal agency documents of public interest. Documents are on file for public inspection in the Office of the Federal Register the day before they are published, unless earlier filing is requested by the issuing agency.

The seal of the National Archives and Records Administration authenticates this issue of the Federal Register as the official serial publication established under the Federal Register Act. 44 U.S.C. 1507 provides that the contents of the **Federal Register** shall be judicially noticed.

The Federal Register is published in paper, 24x microfiche and as an online database through *GPO Access*, a service of the U.S. Government Printing Office. The online edition of the **Federal Register** on *GPO Access* is issued under the authority of the Administrative Committee of the Federal Register as the official legal equivalent of the paper and microfiche editions. The online database is updated by 6 a.m. each day the **Federal Register** is published. The database includes both text and graphics from Volume 59, Number 1 (January 2, 1994) forward. Free public access is available on a Wide Area Information Server (WAIS) through the Internet and via asynchronous dial-in. Internet users can access the database by using the World Wide Web; the Superintendent of Documents home page address is http://www.access.gpo.gov/su__docs/, by using local WAIS client software, or by telnet to swais.access.gpo.gov, then login as guest, (no password required). Dial-in users should use communications software and modem to call (202) 512–1661; type swais, then login as guest (no password required). For general information about *GPO Access*, contact the *GPO Access* User Support Team by sending Internet e-mail to gpoaccess@gpo.gov; by faxing to (202) 512–1262; or by calling toll free 1–888–293–6498 or (202) 512–1530 between 7 a.m. and 5 p.m. Eastern time, Monday–Friday, except for Federal holidays.

The annual subscription price for the **Federal Register** paper edition is $555, or $607 for a combined **Federal Register**, Federal Register Index and List of CFR Sections Affected (LSA) subscription; the microfiche edition of the **Federal Register** including the Federal Register Index and LSA is $220. Six month subscriptions are available for one-half the annual rate. The charge for individual copies in paper form is $8.00 for each issue, or $8.00 for each group of pages as actually bound; or $1.50 for each issue in microfiche form. All prices include regular domestic postage and handling. International customers please add 25% for foreign handling. Remit check or money order, made payable to the Superintendent of Documents, or charge to your GPO Deposit Account, VISA or MasterCard. Mail to: New Orders, Superintendent of Documents, P.O. Box 371954, Pittsburgh, PA 15250–7954.

There are no restrictions on the republication of material appearing in the **Federal Register.**

How To Cite This Publication: Use the volume number and the page number. Example: 60 FR 12345.

SUBSCRIPTIONS AND COPIES

PUBLIC	
Subscriptions:	
Paper or fiche	**202–512–1800**
Assistance with public subscriptions	**512–1806**
General online information	**202–512–1530; 1–888–293–6498**
Single copies/back copies:	
Paper or fiche	**512–1800**
Assistance with public single copies	**512–1803**
FEDERAL AGENCIES	
Subscriptions:	
Paper or fiche	**523–5243**
Assistance with Federal agency subscriptions	**523–5243**

FEDERAL REGISTER WORKSHOP

THE FEDERAL REGISTER: WHAT IT IS AND HOW TO USE IT

FOR: Any person who uses the Federal Register and Code of Federal Regulations

WHO: Sponsored by the Office of the Federal Register.

WHAT: Free public briefings (approximately 3 hours) to present:

1. The regulatory process, with a focus on the Federal Register system and the public's role in the development of regulations.
2. The relationship between the Federal Register and Code of Federal Regulations.
3. The important elements of typical Federal Register documents.
4. An introduction to the finding aids of the FR/CFR system.

WHY: To provide the public with access to information necessary to research Federal agency regulations which directly affect them. There will be no discussion of specific agency regulations.

WASHINGTON, DC

WHEN: September 9, 1997 at 9:00 am.
Office of the Federal Register

WHERE: Conference Room
800 North Capitol Street, NW.
Washington, DC
(3 blocks north of Union Station Metro)

RESERVATIONS: 202–523–4538

BOSTON, MA

WHEN: September 23, 1997 at 9:00 am.

WHERE: John F. Kennedy Library
Smith Hall
Columbia Point
Boston, MA 02125

RESERVATIONS: 1–800–688–9889 x0

Printed on recycled paper containing 100% post consumer waste

Contents

Federal Register

Vol. 62, No. 156

Wednesday, August 13, 1997

Agricultural Marketing Service
RULES
Agricultural commodities; U.S. grade standards and other selected regulations removed; Federal regulatory reform, 43430–43441

Agriculture Department
See Agricultural Marketing Service
See Animal and Plant Health Inspection Service
See Foreign Agricultural Service
See Forest Service
See Rural Telephone Bank

Alcohol, Tobacco and Firearms Bureau
NOTICES
Agency information collection activities:
Proposed collection; comment request, 43426–43427

Animal and Plant Health Inspection Service
RULES
Animal welfare:
Dogs, humane treatment; tethering, 43272–43275
Plant-related quarantine, domestic:
Mediterranean fruit fly, 43269–43272
NOTICES
Environmental statements; availability, etc.:
Nonregulated status determinations—
Monsanto Co. et al.; genetically engineered corn line, 43311–43312

Arts and Humanities, National Foundation
See National Foundation on the Arts and the Humanities

Census Bureau
NOTICES
Agency information collection activities:
Proposed collection; comment request, 43315–43316

Coast Guard
RULES
Regattas and marine parades:
Steubenville Regatta, 43284
NOTICES
Committees; establishment, renewal, termination, etc.:
National Boating Safety Advisory Council, 43415

Commerce Department
See Census Bureau
See International Trade Administration
See National Institute of Standards and Technology
See National Oceanic and Atmospheric Administration
NOTICES
Agency information collection activities:
Submission for OMB review; comment request, 43314–43315

Employment and Training Administration
NOTICES
Adjustment assistance:
C.O.L.A., 43352
Devil Dog, et al., 43352–43353
Gruen Marketing Corp., 43353
Ithaca Industries, Inc., 43353–43354
NAFTA transitional adjustment assistance:
Inland Paperboard & Packaging Inc., 43354
Lithonia Lighting, 43354
Washington Public Power Supply System, 43354–43355

Energy Department
See Federal Energy Regulatory Commission

Environmental Protection Agency
RULES
Conflict of interests; CFR part removed, 43269
Pesticides; tolerances in food, animal feeds, and raw agricultural commodities:
Propiconazole, 43284–43291
PROPOSED RULES
Toxic substances:
Significant new uses—
Organosolv lignin, etc., 43297–43301
NOTICES
Agency information collection activities:
Submission for OMB review; comment request, 43326–43327
Pesticide registration, cancellation, etc.:
Vinclozolin, 43327–43328

Executive Office of the President
See Presidential Documents
See Trade Representative, Office of United States

Federal Aviation Administration
RULES
Class E airspace, 43275–43276
NOTICES
Passenger facility charges; applications, etc.:
Martha's Vineyard Airport, MA, 43415

Federal Communications Commission
RULES
Radio stations; table of assignments:
Louisiana, 43294
Virginia, 43293
PROPOSED RULES
Radio stations; table of assignments:
Oklahoma, 43301
Texas, 43302, 43301
NOTICES
Agency information collection activities:
Submission for OMB review; comment request, 43328–43329
Declaratory ruling petitions:
Cellular Telecommunications Industry Association, 43329–43330

Federal Emergency Management Agency
RULES
Flood insurance; communities eligible for sale:
New York et al., 43291–43293
NOTICES
Radiological emergency preparedness program strategic review, 43330–43331

Federal Energy Regulatory Commission
NOTICES
Applications, hearings, determinations, etc.:
Arizona Public Service Co., 43320–43321
Boston Edison Co., 43321
Cleveland Electric Illuminating Co., 43321
Fitchburg Gas & Electric Co., 43321
Georgia Power Co., 43321
Idaho Power Co., 43322
Kern River Gas Transmission, 43322
Koch Gateway Pipeline Co., 43322
MG Electric Power, Inc., 43322–43323
Midwestern Gas Transmission Co., 43323
Mojave Pipeline Co., 43323
Panhandle Eastern Pipe Line Co., 43323, 43324
Pennsylvania Power & Light Co., 43324
PJM Interconnection, L.L.C., 43324
Southwestern Public Service Co., 43325
Texas Eastern Transmission Corp., 43325
United Illuminating Co., 43325
Unitil Power Corp., 43325
Unitil Resources, Inc., 43325–43326
Williams, Barry Lawson, 43326
Williams Natural Gas Co., 43326
Wisconsin Public Service Corp., 43326

Federal Maritime Commission
NOTICES
Agreements filed, etc., 43331

Federal Reserve System
NOTICES
Meetings; Sunshine Act, 43331

Federal Transit Administration
NOTICES
Agency information collection activities:
Proposed collection; comment request, 43416

Financial Management Service
See Fiscal Service

Fiscal Service
RULES
Book-entry Treasury bonds, notes, and bills:
Securities in book-entry form held through financial intermediaries (TRADES) regulations—
Uniform Commercial Code Article 8 enactment by States, 43283–43284

Fish and Wildlife Service
RULES
Migratory bird hunting:
Tungsten-iron shot approval as nontoxic for 1997-1998 season, 43444–43447
NOTICES
Endangered and threatened species:
Recovery plans—
Okaloosa darter, 43342

Food and Drug Administration
NOTICES
Meetings:
Dermatologic and Ophthalmic Drugs Advisory Committee, 43332–43333
Medical Devices Advisory Committee, 43333

Foreign Agricultural Service
NOTICES
Import quotas and fees:
Dairy import licenses, 43312

Forest Service
NOTICES
Environmental statements; notice of intent:
Eldorado and Tahoe National Forests, CA, 43312–43314

General Services Administration
NOTICES
Acquisition regulations:
Apportionment and reapportionment schedule (SF 132); form cancellation, 43331
Solicitation mailing list application (SF 129); form revision, 43331
Agency information collection activities:
Submission for OMB review; comment request, 43332

Geological Survey
NOTICES
Federal Geographic Data Committee:
National shoreline data standard, 43342–43344

Health and Human Services Department
See Food and Drug Administration
See National Institutes of Health

Housing and Urban Development Department
NOTICES
Grants and cooperative agreements; availability, etc.:
Portfolio reengineering demonstration program, 43340
Mortgage and loan insurance programs:
HUD-owned properties—
HUD-held single family mortgage loans; sale, 43340–43342

Interior Department
See Fish and Wildlife Service
See Geological Survey
See Land Management Bureau
See Minerals Management Service
See National Park Service

Internal Revenue Service
PROPOSED RULES
Income taxes:
Qualified nonrecourse financing, 43295–43297

International Trade Administration
NOTICES
Antidumping:
Fresh cut flowers from—
Columbia, 43317
Antidumping duty orders and findings:
Determinations not to revoke, 43316–43317
Export trade certificates of review, 43317–43318

Justice Department
NOTICES
Agency information collection activities:
Proposed collection; comment request, 43349–43350
Submission for OMB review; comment request, 43350–43351
Privacy Act:
Computer matching programs, 43351–43352

Labor Department
See Employment and Training Administration
See Occupational Safety and Health Administration

Land Management Bureau
NOTICES
Environmental statements; availability, etc.:
Rangeland health standards and grazing management guidelines—
Montana et al., 43344
Meetings:
Silver Shores Project, Bullhead City, AZ; open house, 43344–43345

Minerals Management Service
NOTICES
Outer Continental Shelf operations:
Safety and environmental management program, 43345–43347

National Aeronautics and Space Administration
NOTICES
Meetings:
Earth Systems Science and Applications Advisory Committee, 43355
Life and Microgravity Sciences and Applications Advisory Committee, 43355–43356

National Archives and Records Administration
NOTICES
Agency records schedules; availability, 43356

National Foundation on the Arts and the Humanities
NOTICES
Agency information collection activities:
Submission for OMB review; comment request, 43356–43357

National Highway Traffic Safety Administration
NOTICES
Highway safety programs; breath alcohol testing devices:
Model specifications and conforming products list—
Calibrating units, 43416–43425
Motor vehicle safety standards:
Nonconforming vehicles—
Importation eligibility; determinations, 43425–43426

National Institute of Standards and Technology
NOTICES
Agency information collection activities:
Proposed collection; comment request, 43318–43319
Meetings:
Advanced Technology Visiting Committee, 43319
Cooperative research and development consortium; scanning capacitance microscopy image-to-dopant profile software and metrology techniques, 43319–43320

National Institutes of Health
NOTICES
Inventions, Government-owned; availability for licensing, 43333–43336
Meetings:
National Eye Institute, 43336
National Institute of Allergy and Infectious Diseases, 43338
National Institute of Dental Research, 43337
National Institute of Diabetes and Digestive and Kidney Diseases, 43337
National Institute of Environmental Health Sciences, 43337
National Institute on Deafness and Other Communication Disorders, 43338–43339
National Institute on Drug Abuse, 43337–43338
National Library of Medicine, 43339
Research Grants Division special emphasis panels, 43339

National Oceanic and Atmospheric Administration
RULES
Fishery conservation and management:
West Coast States and Western Pacific fisheries—
Western Pacific crustacean; correction, 43294
PROPOSED RULES
Fishery conservation and management:
Alaska; fisheries of Exclusive Economic Zone—
Bering Sea and Aleutian Islands groundfish, 43307–43310
Marine mammals:
Incidental taking—
Gulf of Maine harbor porpoise; take reduction plan, 43302–43307
NOTICES
Agency information collection activities:
Proposed collection; comment request, 43320

National Park Service
NOTICES
Concession contract negotiations:
Golden Gate National Recreation Area, CA; Cliff House Restaurant and Gift Shop, 43347
Great Basin National Park, NV; food and gift shop, 43347
Sequoia National Park, CA; hotel and related facilities, 43347
Native American human remains and associated funerary objects:
Idaho State Office, Land Management Bureau, Boise, ID; inventory, 43348
Manti-La Sal National Forest, UT; inventory, 43348–43349

Nuclear Regulatory Commission
NOTICES
Environmental statements; availability, etc.:
Florida Power & Light Co., 43363–43364
Wisconsin Electric Power Co., 43364–43365
Operating licenses, amendments; no significant hazards considerations; biweekly notices, 43365–43381
Applications, hearings, determinations, etc.:
Ben-Haim, Aharon, Ph.D., 43357–43358
Blacklock, Susan A., 43359–43360
Elamir, Magdy, M.D., 43360–43361
Nevin, Steven F., 43361–43363

Occupational Safety and Health Administration
NOTICES
Reporting and recordkeeping requirements, 43355

Office of United States Trade Representative
See Trade Representative, Office of United States

Pension Benefit Guaranty Corporation
NOTICES
Agency information collection activities:
Proposed collection; comment request, 43381–43382

Personnel Management Office
NOTICES
Agency information collection activities:
Submission for OMB review; comment request, 43382–43383

Presidential Documents
EXECUTIVE ORDERS
Government agencies and employees:
Tobacco smoke in the Federal workplace; protection (EO 13058), 43451–43452

Public Health Service
See Food and Drug Administration
See National Institutes of Health

Railroad Retirement Board
PROPOSED RULES
General administration; information disclosure to consular official, 43295

Rural Telephone Bank
NOTICES
Meetings; Sunshine Act, 43314

Securities and Exchange Commission
NOTICES
Self-regulatory organizations; proposed rule changes:
National Association of Securities Dealers, Inc., 43385–43408
Applications, hearings, determinations, etc.:
FundManager Portfolios, 43383–43384
Grove Property Trust, 43384–43385

Thrift Supervision Office
NOTICES
Agency information collection activities:
Proposed collection; comment request, 43427–43428

Trade Representative, Office of United States
NOTICES
Generalized System of Preferences:
Annual Review (1997)—
Indonesia; melamine institutional dinnerware products; expedited review; and other product reviews, 43408–43414

Transportation Department
See Coast Guard
See Federal Aviation Administration
See Federal Transit Administration
See National Highway Traffic Safety Administration
RULES
Economic regulations:
Large certificated air carriers; passenger origin-destination survey reports, 43276–43283

Treasury Department
See Alcohol, Tobacco and Firearms Bureau
See Fiscal Service
See Internal Revenue Service
See Thrift Supervision Office

Separate Parts In This Issue

Part II
Department of Agriculture, Agricultural Marketing Service, 43430–43441

Part III
Department of Interior, Fish and Wildlife Service, 43444–43447

Part IV
The President, 43451–43452

Reader Aids
Additional information, including a list of public laws, telephone numbers, reminders, and finding aids, appears in the Reader Aids section at the end of this issue.

Electronic Bulletin Board
Free **Electronic Bulletin Board** service for Public Law numbers, **Federal Register** finding aids, and a list of documents on public inspection is available on 202–275–1538 or 275–0920.

CFR PARTS AFFECTED IN THIS ISSUE

A cumulative list of the parts affected this month can be found in the Reader Aids section at the end of this issue.

3 CFR
Executive Orders:
13058.....43451

5 CFR
Ch. LIV.....43269

7 CFR
29.....43430
31.....43430
32.....43430
36.....43430
52.....43430
53.....43430
54.....43430
58.....43430
301.....43269

9 CFR
1.....43272
3.....43272

14 CFR
71 (2 documents) 43275
241.....43276

20 CFR
Proposed Rules:
200.....43295

26 CFR
Proposed Rules:
1.....43295

31 CFR
357.....43283

33 CFR
100.....43284

40 CFR
3.....43269
180.....43284
Proposed Rules:
721.....43297

44 CFR
64.....43291

47 CFR
73 (2 documents) 43293, 43294
Proposed Rules:
73 (3 documents) 43301, 43302

50 CFR
20.....43444
660.....43294
Proposed Rules:
229.....43302
679.....43307

Rules and Regulations

Federal Register
Vol. 62, No. 156
Wednesday, August 13, 1997

This section of the FEDERAL REGISTER contains regulatory documents having general applicability and legal effect, most of which are keyed to and codified in the Code of Federal Regulations, which is published under 50 titles pursuant to 44 U.S.C. 1510.

The Code of Federal Regulations is sold by the Superintendent of Documents. Prices of new books are listed in the first FEDERAL REGISTER issue of each week.

ENVIRONMENTAL PROTECTION AGENCY

5 CFR Chapter LIV

40 CFR Part 3

[FRL–5870–7]

Revocation of Obsolete Employee Responsibilities and Conduct Rules

AGENCY: Environmental Protection Agency (EPA).

ACTION: Final rule.

SUMMARY: The Environmental Protection Agency is revoking the remaining provisions of its residual Employee Responsibilities and Conduct regulation. These provisions, which are no longer needed, merely cross-reference the Government-wide and EPA Standards of Ethical Conduct at 5 CFR parts 2634, 2635, and 6401 and set forth EPA's old regulatory conflict of interest waivers which have now been superseded by Office of Government Ethics Government-wide regulatory waivers.

EFFECTIVE DATE: August 13, 1997.

FOR FURTHER INFORMATION CONTACT: Donnell L. Nantkes, Office of General Counsel (2311), Environmental Protection Agency, 401 M Street, SW., Washington, DC 20460, (202) 260–4556.

SUPPLEMENTARY INFORMATION:

I. Background

Most of the former provisions of 40 CFR part 3 were removed when the Environmental Protection Agency, with the concurrence of the Office of Government Ethics, published its Supplemental Standards of Ethical Conduct for Employees of the Environmental Protection Agency on August 2, 1996 at 61 FR 40500. (Most of these provisions had previously been superseded when the Office of Government Ethics' ''Standards of Ethical Conduct for Employees of the Executive Branch,'' as now codified at 5 CFR part 2635, became generally effective on February 3, 1993.) The only provisions of 40 CFR part 3, as revised in the EPA rulemaking last August, which remained in effect were new 40 CFR 3.100 and new redesignated 40 CFR 3.101. These provisions cross-referenced the Government-wide and EPA Standards of Ethical Conduct at 5 CFR parts 2634, 2635, and 6401 and retained EPA's regulatory waivers of previously designated 40 CFR 3.301(b) pending publication of Government-wide regulatory waivers by the Office of Government Ethics. These Government-wide waivers, which OGE published on December 18, 1996 at 61 FR 66830, as corrected at 62 FR 1361 and 23127, revised 5 CFR part 2640 to establish Government-wide regulatory waivers of the conflict of interest provisions of 18 U.S.C. 208(a) as authorized by 18 U.S.C. 208(b)(2) and provided that, as of January 17, 1997, regulatory waivers issued by individual agencies would no longer be effective.

The regulatory waivers at 40 CFR. 3.101 have been superseded by the Government-wide regulatory waivers, and the cross-referencing provision of 40 CFR 3.100 is not sufficiently important to justify its retention. Therefore, EPA is removing 40 CFR part 3.

III. Matters of Regulatory Procedure

Executive Order 12866

In issuing this rule, EPA has adhered to the regulatory philosophy and the applicable principles of regulation set forth in section 1 of Executive Order 12866, Regulatory Planning and Review. This regulation has not been reviewed by the Office of Management and Budget under that Executive order, as it deals with agency organization, management, and personnel matters and is not, in any event, deemed ''significant'' thereunder.

Paperwork Reduction Act

EPA has determined that the Paperwork Reduction Act (44 U.S.C. chapter 35) does not apply because the proposed regulation does not contain any information collection requirements that require the approval of the Office of Management and Budget.

Administrative Procedure Act

EPA has found that good cause exists under 5 U.S.C. 553(b)(3) (A), (B) and (d)(3) for waiving, as unnecessary and contrary to the public interest, the general notice of proposed rulemaking and the 30-day delay in effectiveness as to these rules and revocations. This rulemaking is related solely to EPA's organization, procedure, and practice. Further, this regulation merely eliminates provisions which have been superseded in any event and should therefore become effective immediately.

List of Subjects in 40 CFR Part 3

Environmental protection, Conflict of interests, Government employees.

Dated: July 30, 1997.

Carol M. Browner,

Administrator, Environmental Protection Agency.

For the reasons set forth in the preamble, the Environmental Protection Agency is removing part 3 of title 40 of the Code of Federal Regulations in accordance with its authority at 5 U.S.C. 7301.

[FR Doc. 97–21379 Filed 8–12–97; 8:45 am]
BILLING CODE 6560–50–P

DEPARTMENT OF AGRICULTURE

Animal and Plant Health Inspection Service

7 CFR Part 301

[Docket No. 97–056–4]

Mediterranean Fruit Fly; Additions to the Quarantined Areas

AGENCY: Animal and Plant Health Inspection Service, USDA.

ACTION: Interim rule and request for comments.

SUMMARY: We are amending the Mediterranean fruit fly regulations by adding an area in Hillsborough County, FL, and adding an area in Orange County, FL, to the list of quarantined areas. We are also revising the entry for Manatee County, FL, to make the boundary lines of the quarantined area more accurate. The regulations restrict the interstate movement of regulated articles from the quarantined areas. This action is necessary on an emergency basis to prevent the spread of the

Mediterranean fruit fly into noninfested areas of the continental United States.

DATES: Interim rule effective August 7, 1997. Consideration will be given only to comments received on or before October 14, 1997.

ADDRESSES: Please send an original and three copies of your comments to Docket No. 97–056–4, Regulatory Analysis and Development, PPD, APHIS, suite 3C03, 4700 River Road Unit 118, Riverdale, MD 20737–1238. Please state that your comments refer to Docket No. 97–056–4. Comments received may be inspected at USDA, room 1141, South Building, 14th Street and Independence Avenue SW., Washington, DC, between 8 a.m. and 4:30 p.m., Monday through Friday, except holidays. Persons wishing to inspect comments are requested to call ahead on (202) 690–2817 to facilitate entry into the comment reading room.

FOR FURTHER INFORMATION CONTACT: Mr. Michael B. Stefan, Operations Officer, Domestic and Emergency Programs, PPQ, APHIS, 4700 River Road Unit 134, Riverdale, MD 20737–1236, (301) 734–8247; or e-mail: mstefan@aphis.usda.gov.

SUPPLEMENTARY INFORMATION:

Background

The Mediterranean fruit fly, *Ceratitis capitata* (Wiedemann), is one of the world's most destructive pests of numerous fruits and vegetables. The Mediterranean fruit fly (Medfly) can cause serious economic losses. Heavy infestations can cause complete loss of crops, and losses of 25 to 50 percent are not uncommon. The short life cycle of this pest permits the rapid development of serious outbreaks.

The Mediterranean fruit fly regulations (7 CFR 301.78 through 301.78–10; referred to below as the regulations) restrict the interstate movement of regulated articles from quarantined areas to prevent the spread of Medfly to noninfested areas of the United States.

An interim rule effective on June 16, 1997, and published in the **Federal Register** on June 20, 1997 (62 FR 33537–33539, Docket No. 97–056–2), added a portion of Hillsborough County, FL, to the list of quarantined areas and restricted the interstate movement of regulated articles from the quarantined area. We also published another interim rule effective on July 3, 1997, and published in the **Federal Register** on July 10, 1997 (62 FR 36976–36978, Docket No. 97–056–3), that expanded the quarantined area in Hillsborough County, FL, and added areas in Manatee and Polk Counties, FL, to the list of quarantined areas.

Recent trapping surveys by inspectors of Florida State and county agencies and by inspectors of the Animal and Plant Health Inspection Service (APHIS) have revealed that an infestation of Medfly has occurred in an additional area in Hillsborough County and in a portion of Orange County, FL.

The regulations in § 301.78–3 provide that the Administrator of APHIS will list as a quarantined area each State, or each portion of a State, in which the Medfly has been found by an inspector, in which the Administrator has reason to believe that the Medfly is present, or that the Administrator considers necessary to regulate because of its inseparability for quarantine enforcement purposes from localities in which the Medfly has been found.

Less than an entire State will be designated as a quarantined area only if the Administrator determines that the State has adopted and is enforcing restrictions on the intrastate movement of the regulated articles that are equivalent to those imposed on the interstate movement of regulated articles, and the designation of less than the entire State as a quarantined area will prevent the interstate spread of the Medfly. The boundary lines for a portion of a State being designated as quarantined are set up approximately four-and-one-half-miles from the detection sights. The boundary lines may vary due to factors such as the location of hosts, the location of transportation centers, such as bus stations and airports, the pattern of persons moving in that State, the number and patterns of distribution of the Medfly, and the use of clearly identifiable lines for the boundaries.

In accordance with these criteria and the recent Medfly findings described above, we are amending § 301.78–3 by adding an area in Hillsborough County, FL, and adding an area in Orange County, FL, to the list of quarantined areas. In addition, we are revising the entry for Manatee County, FL, to make the boundary lines more accurately reflect the criteria described above. The resulting quarantined areas are described in the rule portion of this document.

Emergency Action

The Administrator of the Animal and Plant Health Inspection Service has determined that an emergency exists that warrants publication of this interim rule without prior opportunity for public comment. Immediate action is necessary to prevent the Medfly from spreading to noninfested areas of the United States.

Because prior notice and other public procedures with respect to this action are impracticable and contrary to the public interest under these conditions, we find good cause under 5 U.S.C. 553 to make it effective upon signature. We will consider comments that are received within 60 days of publication of this rule in the **Federal Register**. After the comment period closes, we will publish another document in the **Federal Register**. It will include a discussion of any comments we receive and any amendments we are making to the rule as a result of the comments.

Executive Order 12866 and Regulatory Flexibility Act

This rule has been reviewed under Executive Order 12866. For this action, the Office of Management and Budget has waived its review process required by Executive Order 12866.

This action amends the Medfly regulations by adding an area in Hillsborough County, revising the entry for Manatee County, and adding an area in Orange County, FL, to the list of quarantined areas. The regulations restrict the interstate movement of regulated articles from the quarantined areas.

This emergency situation makes compliance with section 603 and timely compliance with section 604 of the Regulatory Flexibility Act (5 U.S.C. 601 *et seq.*) impracticable. If we determine that this rule would have a significant economic impact on a substantial number of small entities, then we will discuss the issues raised by section 604 of the Regulatory Flexibility Act in our Final Regulatory Flexibility Analysis.

Executive Order 12372

This program/activity is listed in the Catalog of Federal Domestic Assistance under No. 10.025 and is subject to Executive Order 12372, which requires intergovernmental consultation with State and local officials. (See 7 CFR part 3015, subpart V).

Executive Order 12988

This rule has been reviewed under Executive Order 12988, Civil Justice Reform. This rule: (1) Preempts all State and local laws and regulations that are inconsistent with this rule; (2) has no retroactive effect; and (3) does not require administrative proceedings before parties may file suit in court challenging this rule.

National Environmental Policy Act

An environmental assessment and finding of no significant impact have

been prepared for this rule. The site specific environmental assessment and programmatic Medfly environmental impact statement provide a basis for our conclusion that implementation of integrated pest management to achieve eradication of the Medfly would not have a significant impact on human health and the natural environment. Based on the finding of no significant impact, the Administrator of the Animal and Plant Health Inspection Service has determined that an environmental impact statement need not be prepared.

The environmental assessment and finding of no significant impact were prepared in accordance with: (1) The National Environmental Policy Act of 1969 (NEPA) (42 U.S.C. 4321 *et seq.*), (2) Regulations of the Council on Environmental Quality for implementing the procedural provisions of NEPA (40 CFR parts 1500–1508), (3) USDA regulations implementing NEPA (7 CFR part 1b), and (4) APHIS' NEPA Implementing Procedures (7 CFR part 372).

Copies of the environmental assessment and finding of no significant impact are available for public inspection at USDA, room 1141, South Building, 14th Street and Independence Avenue, SW., Washington, DC, between 8 a.m. and 4:30 p.m., Monday through Friday, except holidays. Persons wishing to inspect copies are requested to call ahead on (202) 690–2817 to facilitate entry into the reading room. In addition, copies may be obtained by writing to the individual listed under **FOR FURTHER INFORMATION CONTACT.**

Paperwork Reduction Act

This rule contains no information collection or recordkeeping requirements under the Paperwork Reduction Act of 1995 (44 U.S.C. 3501 *et seq.*).

List of Subjects in 7 CFR Part 301

Agricultural commodities, Incorporation by reference, Plant diseases and pests, Quarantining, Reporting and recordkeeping requirements, Transportation.

Accordingly, 7 CFR part 301 is amended as follows:

PART 301—DOMESTIC QUARANTINE NOTICES

1. The authority citation for part 301 continues to read as follows:

Authority: 7 U.S.C. 147a, 150bb, 150dd, 150ee, 150ff, 161, 162, and 164-167; 7 CFR 2.22, 2.80, and 371.2(c).

2. In § 301.78–3, paragraph (c), the entry for Florida is amended by adding entries for Hillsborough and Orange Counties and revising the entry for Manatee County to read as follows:

§ 301.78–3 Quarantined areas.

* * * * *

(c) * * *

FLORIDA

Hillsborough County. That portion of Hillsborough County beginning at the mouth of the Cockroach Creek in the Cockroach Bay; then south along the shoreline of the Cockroach Creek to Valroy Road; then east along Valroy Road to I–75; then north along I–75 to the Little Manatee River; then east along the shoreline of the Little Manatee River to the section line dividing sections 26 and 27, T. 32 S., R. 19 E.; then north along the section line dividing sections 26 and 27, T. 32 S., R. 19 E., to the section line dividing sections 22 and 23, T. 32 S., R. 19 E. (also known as S.E. 36th Street); then north along the section line dividing sections 22 and 23, T. 32 S., R. 19 E., (also known as S.E. 36th Street) to the section line dividing sections 14 and 15, T. 32 S., R. 19 E.; then north along the section line dividing sections 14 and 15, T. 32 S., R. 19 E. to I–75; then north along I–75 to N.E. 19th Avenue; then west along N.E. 19th Avenue to the section line dividing sections 34 and 35, T. 31 S., R. 19 E.; then north along the section line dividing sections 34 and 35, T. 31 S., R. 19 E., through sections 26 and 27, sections 22 and 23, and sections 14 and 15, T. 31 S., R. 19 E., to U.S. Highway 41; then north along U.S. Highway 41 to Big Bend Road (State Road 672); then west along Big Bend Road (State Road 672) to its end; then west along an imaginary line to the shoreline of the Tampa Bay; then south and west along the shoreline of the Tampa Bay (including all land masses to the east of the Tampa Bay) to the shoreline of the Cockroach Bay; then south and east along the shoreline of the Cockroach Bay to the point of beginning.

* * * * *

Manatee County. That portion of Manatee County beginning at the intersection of U.S. Highway 41 and U.S. Highway 301; then south along U.S. Highway 301 to West 49th Street; then west along West 49th Street to 5th Avenue West; then south along 5th Avenue West to 33rd Street West; then west along 33rd Street West to West 8th Avenue; then south along West 8th Avenue to Business U.S. Highway 41 (also known as West 8th Avenue); then south along Business U.S. Highway 41 (also known as West 8th Avenue), crossing the Green Bridge across the Manatee River until Business U.S. Highway 41 (also known as West 8th Avenue) becomes West 9th Street; then south along West 9th Street to 17th Avenue West; then west along 17th Avenue West to 26th Street West; then west along 26th Street West along an imaginary line to the shoreline of Palma Sola Bay; then northwest along an imaginary line through Palma Sola Bay to the southern shoreline of Perico Bayou, which separates Perico Island from the mainland; then along the eastern shoreline of Perico Bayou, to Tampa Bay; then east along the northern shoreline of the mainland to a point due south of the westernmost end of Snead Island; then north from this point along an imaginary line to Snead Island; then northeast along an imaginary line to the western most land mass on the southern end of Sunshine Skyway (U.S. Highway 19); then east and south along Sunshine Skyway (U.S. Highway 19) until it merges with U.S. Highway 41; then south along U.S. Highway 41 to the point of beginning.

Orange County. That portion of Orange County beginning at the intersection of the Lake/Orange County line and Jones Avenue; then east along Jones Avenue to Sand Farm Road; then north along Sand Farm Road to Sadler Avenue (State Road 448); then east along Sadler Avenue (State Road 448) to U.S. Highway 441; then north along U.S. Highway 441 to Wadsworth Road; then east along Wadsworth Road to its end; then east along the section line dividing sections 4 and 9 and sections 3 and 10, T. 20 S., R. 27 E., to Roundlake Road; then south along Roundlake Road to Ondich Road; then east along Ondich Road to Plymouth-Sorrento Road; then east across Plymouth-Sorrento Road to Haas Road; then east along Haas Road to Foliage Way; then south along Foliage Way to Kelly Park Road; then east along Kelly Park Road to Rock Springs Road (State Road 435); then south along Rock Springs Road (State Road 435) to Myrtle Street; then west along Myrtle Street to Hawthorn Avenue; then south along Hawthorn Avenue to 4th Street; then west along 4th Street to Bradshaw Road; then south along Bradshaw Road to Ocoee-Apopka Road; then south along Ocoee-Apopka Road to Harmon Road; then west along Harmon Road to Binion Road; then south along Binion Road to the section line dividing sections 19 and 30, T. 21 S., R. 28 E.; then west along the section line dividing sections 19 and 30, T. 21 S., R. 28 E., to the section line dividing sections 24 and 25, T. 21 S., R. 27 E.; then west along the section line dividing sections 24 and 25, T. 21 S., R. 27 E., to the shoreline of Lake Apopka; then north and west along the shoreline of Lake Apopka to the Orange/Lake

County line; then north along the Orange/Lake County line to the point of beginning.

Done in Washington, DC, this 7th day of August 1997.

Terry L. Medley,

Administrator, Animal and Plant Health Inspection Service.

[FR Doc. 97–21369 Filed 8–12–97; 8:45 am]

BILLING CODE 3410–34–P

DEPARTMENT OF AGRICULTURE

Animal and Plant Health Inspection Service

9 CFR Parts 1 and 3

[Docket No. 95–078–2]

RIN 0579–AA74

Humane Treatment of Dogs; Tethering

AGENCY: Animal and Plant Health Inspection Service, USDA.

ACTION: Final rule.

SUMMARY: We are amending the regulations for the humane treatment of dogs under the Animal Welfare Act by removing the provisions for tethering dogs as a means of primary enclosure. Our experience in enforcing the Animal Welfare Act has led us to conclude that permanently tethering a dog as a means of primary enclosure is not a humane practice that is in the animal's best interests. Temporarily tethering a dog due to health or other reasons would be permitted if the licensee obtains the approval of the Animal and Plant Health Inspection Service. This action will help ensure that dogs in facilities regulated under the Animal Welfare Act will be treated in a manner that is consistent with the animals' best interests.

EFFECTIVE DATE: September 12, 1997.

FOR FURTHER INFORMATION CONTACT: Mr. Stephen Smith, Staff Animal Health Technician, Animal Care, APHIS, suite 6D02, 4700 River Road Unit 84, Riverdale, MD 20737–1234, (301) 734–4972, or e-mail: snsmith@aphis.usda.gov.

SUPPLEMENTARY INFORMATION:

Background

Under the Animal Welfare Act (AWA) (7 U.S.C. 2131 *et seq.*) the Secretary of Agriculture is authorized to promulgate standards and other requirements governing the humane handling, housing, care, treatment, and transportation of certain animals by dealers, research facilities, exhibitors, and carriers and intermediate handlers. Regulations established under the Act are contained in 9 CFR parts 1, 2, and 3. Subpart A of 9 CFR part 3 (referred to below as the regulations) contains requirements concerning dogs and cats.

On July 2, 1996, we published in the **Federal Register** (61 FR 34386–34389, Docket No. 95–078–1) a proposal to amend the regulations by removing the option for facilities to use tethering as a means of primary enclosure. In the same document, we proposed to amend the regulations by revising the temperature requirements for indoor, sheltered, and mobile and traveling housing facilities, and for primary conveyances used in transportation, to require that the ambient temperature must never exceed 90 °F (32.2 °C) when dogs or cats are present.

We solicited comments concerning our proposal for 60 days ending September 3, 1996. We received 54 comments by that date. Many of the comments we received on the proposed rule expressed concerns with the proposal to revise the temperature requirements. This final rule concerns only the part of the proposal to remove tethering as a means of primary enclosure. We are still reviewing the issues concerning the effects of temperature on dogs and cats. If we take any further action regarding temperature, we will publish the appropriate document in the **Federal Register**.

Thirty-three of the comments received on the proposed rule addressed the part of the proposal to remove tethering as a means of primary enclosure. These comments were from dog breeders, humane organizations, a veterinarian, pet industry associations, an animal feed industry association, pharmaceutical companies, a medical research association, a Federal government agency, and other interested individuals. Nine of the comments supported the proposal; 14 comments opposed the proposal; 1 comment did not oppose the proposal, but had recommendations concerning the proposal's Initial Regulatory Flexibility Analysis; and 9 comments expressed neither support nor opposition, but stated that the provisions of the proposal should be extended to apply to anyone who owns dogs, instead of only to licensed breeders and dealers. The comments are discussed below by topic.

Currently, the regulations provide that dogs in outside housing facilities regulated under the AWA may be kept on tethers as a means of primary enclosure. We proposed to remove this provision. Several commenters who supported the proposed rule stated that, while they believe tethering should not be used as a primary enclosure, there are situations when tethering is useful for short intervals. For example, the commenter said an owner may put a dog on a tether while cleaning its pen, to isolate the dog for health reasons, or to restrain an aggressive dog. The commenters recommended that we state explicitly in the regulations that tethering is prohibited as a means of primary enclosure, and clarify in the regulations when tethering would be permissible.

We agree that it would be more clear to specifically state in the regulations that permanent tethering is prohibited as a means of primary enclosure. Therefore, we are adding a new paragraph (c)(4) to § 3.6 of the regulations to state that tethers are prohibited for use as primary enclosures. However, we realize that there may be times when it would be appropriate, and in the dog's best interests, to put a dog on a tether temporarily, ranging from a few minutes while the dog's pen is cleaned to several days to isolate an animal for health reasons. If we stated in the regulations when tethering would be permitted, we would invariably fail to include some circumstance. Further, while tethering may be appropriate for one dog under a specific circumstance, it may not be appropriate for another dog under the same circumstance. Therefore, we are also adding a provision in new paragraph (c)(4) to state that a licensee must obtain the approval of the Animal and Plant Health Inspection Service (APHIS) to temporarily tether a dog at the licensee's facility. This safeguard will give APHIS the opportunity to evaluate on a case-by-case basis the appropriateness of temporarily tethering a dog in order to ensure that any temporary tethering of a dog is in the animal's best interests.

A licensee may obtain verbal approval from an APHIS inspector to temporarily tether a dog for a period of 3 days or less. If a licensee intends to regularly tether a dog for periods of less than 3 days in order to conduct a regular activity (for example, a licensee intends to tether a dog every day for 20 minutes while the dog's primary enclosure is being cleaned), the licensee will only have to obtain verbal approval for such tethering one time. If a licensee intends to temporarily tether a dog for a period to exceed 3 days, the licensee must obtain written approval from the APHIS Animal Care Regional Office for the region in which the licensee operates.

One commenter asked us to specify that, if an inspector finds a dog to be temporarily tethered, the inspector should ask the licensee to show him or her the dog's primary enclosure. The

purpose of this would be to verify that the tethering arrangement is not permanent and that the dog has a primary enclosure. We are not making any changes to the proposed rule in response to this comment. We assure the commenter that, in conducting inspections of licensed facilities, each inspector will verify that each animal's primary enclosure complies with the regulations. If a dog is tethered at the time of an inspection, the inspector will verify that the licensee has APHIS approval and that the dog has a primary enclosure that is in compliance with the regulations.

Many commenters stated that they believe tethering is humane and should be allowed as a means of primary enclosure. One commenter specified that if the tether is equipped with a swivel on the end, it is safe and does not encumber the movement of the dog. Other commenters said the proposal did not present any scientific data to support the claim that tethering is inhumane.

We are not making any changes to the proposal based on these comments. As we stated in the proposed rule, we do not have any data on the frequency of injuries due to tethers. However, our experience has led us to conclude that permanently tethering dogs as a means of primary enclosure is not a humane practice that is in the animals' best interests. Further, permanent tethering is no longer a generally accepted practice within the dog dealer industry, and some industry groups prohibit their members from using tethering as a means of permanent restraint. A dog attached to a tether is significantly restricted in its movement. A tether can also become tangled around or hooked on the dog's shelter structure or other objects, further restricting the dog's movement and potentially causing injury. We do not believe that a flexible tether, a tether with a swivel on the end, or other such devices would significantly improve the safety of a tether. Such devices may improve the mobility of the dog, but the possibility would still remain over time for the tether to become tangled around objects within the dog's range.

We reiterate that we are prohibiting permanent tethering as a means of primary enclosure. It is possible that most injuries from tethers are, in part, due to a dog being unsupervised for long periods of time while on the tether. Prohibiting the use of a permanent tether as a means of primary enclosure for dogs will minimize the likelihood that a dog would be left unsupervised for extended periods of time while on a tether, thus reducing the likelihood of injury. We are not prohibiting the use of temporary tethering for restraining a dog for short periods of time if the licensee obtains the approval of APHIS.

One commenter said that our proposal would be in conflict with the requirements of some cities that dogs be tethered. The commenter is correct that many cities require dogs to be on a leash or tethered when they are not enclosed by some other means. These laws are necessary so that the public is protected from aggressive dogs and to prevent dogs from roaming freely. However, we know of no city that requires dogs to be tethered as a means of primary enclosure. Further, our rule prohibiting the use of a permanent tether as primary enclosure would apply only to persons regulated under the AWA (dog breeders, dealers, exhibitors, carriers, intermediate handlers, and research facilities). Individual dog owners would not be affected by this rule, and could continue to tether their dogs if they believe it is appropriate, and if it is not restricted by local regulations. A facility regulated under the AWA would still be permitted to temporarily tether dogs if the facility obtains the approval of APHIS.

A few commenters said that tethering is used to train hunting dogs and should be allowed for this purpose. At the present time, the breeding or training of hunting dogs is not a regulated activity. Therefore, the activities of hunting dog breeders and trainers would not be affected by this rule. If we determine that standards should be promulgated for the care of hunting dogs by breeders, we will publish a proposal in the **Federal Register**.

One commenter requested that tethering be permitted with the recommendation of a veterinarian. We would like to emphasize that we are only prohibiting the use of permanent tethering as a means of primary enclosure. Temporarily tethering a dog due to health or other reasons would be permitted under this rule if the licensee obtains the approval of APHIS.

Several commenters said that if tethering is harmful to dogs housed by licensed breeders and dealers, then it is harmful to all dogs. The commenters said that we should extend the regulation to prohibit tethering of dogs housed by humane societies, pounds, individual pet owners, and hunting breed producers. While we agree with commenters that all dogs should be treated in a humane manner, we are not making any changes to the rule in response to these comments. The AWA authorizes our agency to promulgate standards and other requirements governing the humane handling, housing, care, treatment, and transportation of certain animals by dealers, research facilities, exhibitors, and carriers and intermediate handlers. The AWA does not authorize us to promulgate standards for the care of animals by humane societies, pounds, or individual pet owners. Requirements for the care of animals owned by individuals, and for the enforcement of animal control laws, are under State or local authority. Further, as stated previously in this document, the breeding or training of hunting dogs is not a regulated activity at the present time. If we determine that standards should be promulgated for the care of hunting dogs by breeders, we will publish a proposal in the **Federal Register**.

One commenter recommended several additional amendments to the regulations concerning primary enclosures. The recommendations include requiring that all dogs have an indoor housing facility and an outdoor run, revising the formula for calculating the required enclosure size, adopting stricter sanitation requirements, requiring that psychological enrichments such as toys and human companionship be provided to dogs housed in licensed facilities, and adding additional exercise requirements. This comment requests amendments that are outside the scope of the proposed regulation. However, we will consider the comment as a request for additional rulemaking. If we decide to make any changes to the regulations in response to this request, we will publish a proposed rule in the **Federal Register**.

One comment addressed the Initial Regulatory Flexibility Analysis that appeared in the proposed rule. We have addressed this comment as part of the Final Regulatory Flexibility Analysis that appears later in this document.

Therefore, based on the rationale set forth in the proposed rule and in this document, we are adopting the provisions of the proposal as a final rule with the changes discussed in this document.

Executive Order 12866 and Regulatory Flexibility Act

This rule has been reviewed under Executive Order 12866. The rule has been determined to be not significant for the purposes of Executive Order 12866 and, therefore, has not been reviewed by the Office of Management and Budget.

This document makes final part of a proposed rule published in the **Federal Register** on July 2, 1996 (61 FR 34386–34389, Docket no. 95–078–1). As part of the proposed rule document, we performed an Initial Regulatory

Flexibility Analysis, in which we invited comments concerning potential economic effects of the proposed rule. We received one comment on the proposed rule that addressed our Initial Regulatory Flexibility Analysis. This comment is discussed below. However, the comment did not specifically offer information on the potential economic effects that prohibiting tethering as a means of primary enclosure would have on small entities. Therefore, we have based this Final Regulatory Flexibility Analysis on the data available to us.

The part of the proposed rule we are making final will eliminate permanent tethering as a means of primary enclosure for dogs in facilities licensed or registered under the Animal Welfare Act. We are taking this action because our experience in enforcing the Animal Welfare Act has led us to conclude that permanently tethering a dog as a means of primary enclosure is not a humane practice that is in the animal's best interests.

The comment we received on the Initial Regulatory Flexibility Analysis said that the analysis falls short of what needs to be included in a Regulatory Flexibility Analysis. Specifically, the commenter said that the analysis should discuss other alternatives to the proposal, such as requiring a flexible tether; should show evidence of a consultative process with the affected industry; should address how frequently inspectors find dogs to be injured as a result of tethering; and should explore whether or not most injuries are due more to neglect than to a tether. We have made no changes to the proposed rule based on this comment. However, we have tried to address the commenters concerns in this final analysis.

As we stated in the Initial Regulatory Flexibility Analysis, there is no information available on the actual number of Class A and Class B licensed dog dealers who use tethering as a means of primary enclosure. Neither do we have any data on the frequency of injuries due to tethers. However, our inspectors report that permanently tethering a dog as a means of primary enclosure is rare among licensed dealers. Kennels and cages are currently the preferred means of primary enclosure, with tethering sometimes used as a temporary restraint. In addition, permanent tethering is no longer a generally accepted practice within the dog dealer industry, and some industry groups prohibit their members from using tethering as a means of permanent restraint.

It is also the experience of APHIS inspectors that, when used as a means of primary enclosure, permanent tethering is not a humane practice that is in the animal's best interests. A dog permanently attached to a tether is significantly restricted in its movement. A tether can also become tangled around or hooked on the dog's shelter structure or other objects, further restricting the dog's movement and potentially causing injury. It is possible that most injuries from tethers are, in part, due to a dog being unsupervised for long periods of time while on the tether. Prohibiting the use of a permanent tether as a means of primary enclosure for dogs will minimize the likelihood that a dog would be left unsupervised for extended periods of time while on a tether, thus reducing the likelihood of injury.

One comment that we have already addressed in the ''Background'' section of this final rule suggests an alternative to the proposal, and we have considered this suggestion. The suggested alternative was to allow tethering as primary enclosure if the tether is equipped with a swivel. We do not believe that a tether with a swivel on the end, a flexible tether, or other such devices would significantly improve the safety of a permanent tether. Such devices may improve the mobility of the dog, but the possibility would still remain for the tether to become tangled around objects within the dog's range, especially over extended periods of time.

This rule will primarily affect Class A and Class B licensed dog dealers. As stated previously in this analysis, there is no information available on the actual number of Class A and Class B licensed dog dealers who use permanent tethering as a means of primary enclosure. Over 95 percent of Class A and Class B licensed dog dealers are considered small businesses. We do not expect the elimination of permanent tethering as a means of primary enclosure to have a significant impact on dog dealers, large or small, because permanent tethering as a means of primary enclosure is rarely, if ever, utilized by Class A and Class B licensed dog dealers. We also do not expect the elimination of permanent tethering as a means of primary enclosure to have a signficant impact on exhibitors, carriers, intermediate handlers, or research facilities because permanent tethering is practically never used by these regulated entities.

This rule contains a reporting and recordkeeping requirement. Specifically, this rule requires licensees to obtain approval from APHIS before they may temporarily tether a dog.

Executive Order 12372

This program/activity is listed in the Catalog of Federal Domestic Assistance under No. 10.025 and is subject to Executive Order 12372, which requires intergovernmental consultation with State and local officials. (See 7 CFR part 3015, subpart V.)

Executive Order 12988

This final rule has been reviewed under Executive Order 12988, Civil Justice Reform. It is not intended to have retroactive effect. This rule would not preempt any State or local laws, regulations, or policies, unless they present an irreconcilable conflict with this rule. The Act does not provide administrative procedures which must be exhausted prior to a judicial challenge to the provisions of this rule.

Paperwork Reduction Act

The proposed rule that preceded this final rule contained no information collection or recordkeeping requirements. However, this final rule contains an information collection requirement that was not included in the proposed rule. Specifically, this final rule requires licensees to obtain approval from APHIS before they may temporarily tether a dog.

In accordance with section 3507(d) of the Paperwork Reduction Act of 1995 (44 U.S.C. 3501 *et seq.*), the information collection or recordkeeping requirements included in this final rule have been submitted for approval to the Office of Management and Budget (OMB). When OMB notifies us of its decision, we will publish a document in the **Federal Register** providing notice of the assigned OMB control number or, if approval is denied, providing notice of what action we plan to take.

Estimate of burden: Public reporting burden for this collection of information is estimated to average .5 hours per response.

Respondents: 10.

Estimated number of responses per respondent: 2.0.

Estimated total annual burden on respondents: 10 hours.

List of Subjects

9 CFR Part 1

Animal welfare, Pets, Reporting and recordkeeping requirements, Research.

9 CFR Part 3

Animal welfare, Marine mammals, Pets, Reporting and recordkeeping requirements, Research, Transportation.

Accordingly, 9 CFR parts 1 and 3 are amended as follows:

PART 1—DEFINITION OF TERMS

1. The authority citation for part 1 continues to read as follows:

Authority: 7 U.S.C. 2131–2159; 7 CFR 222, 2.80, and 371.2(g).

2. In § 1.1, the definition for *primary enclosure* is revised to read as follows:

§ 1.1 Definitions.

* * * * *

Primary enclosure means any structure or device used to restrict an animal or animals to a limited amount of space, such as a room, pen, run, cage, compartment, pool, or hutch.

* * * * *

PART 3—STANDARDS

3. The authority citation for part 3 is revised to read as follows:

Authority: 7 U.S.C. 2131–2159; 7 CFR 2.22, 2.80, and 371.2(d).

4. Section 3.6 is amended by removing paragraph (c)(2), by redesignating paragraphs (c)(3) and (c)(4) as paragraphs (c)(2) and (c)(3), respectively, and by adding a new paragraph (c)(4) to read as follows:

§ 3.6 Primary enclosures.

* * * * *

(c) * * *

(4) *Prohibited means of primary enclosure.* Permanent tethering of dogs is prohibited for use as primary enclosure. Temporary tethering of dogs is prohibited for use as primary enclosure unless approval is obtained from APHIS.

* * * * *

Done in Washington, DC, this 7th day of August 1997.

Terry L. Medley,

Administrator, Animal and Plant Health Inspection Service.

[FR Doc. 97–21370 Filed 8–12–97; 8:45 am]

BILLING CODE 3410–34–P

DEPARTMENT OF TRANSPORTATION

Federal Aviation Administration

14 CFR Part 71

[Docket No. 97–ACE–8]

Amendment to Class E Airspace, Storm Lake, IA

AGENCY: Federal Aviation Administration, DOT.

ACTION: Direct final rule; confirmation of effective date.

SUMMARY: This rule amends the Class E airspace area at Storm Lake Municipal Airport, Storm Lake, IA. The effect of this rule is to provide additional controlled airspace for aircraft arriving and departing the Storm Lake Municipal Airport.

EFFECTIVE DATE: 0901 UTC September 11, 1997.

FOR FURTHER INFORMATION CONTACT: Kathy Randolph, Air Traffic Division, Airspace Branch, ACE–520C, Federal Aviation Administration, 601 East 12th Street, Kansas City, Missouri 64106; telephone number: (816) 426–3408.

SUPPLEMENTARY INFORMATION: The FAA published this direct final rule with a request for comments in the **Federal Register** on May 21, 1997 (62 FR 27688). The FAA uses the direct final rulemaking procedure for a non-controversial rule where the FAA believes that there will be no adverse public comment. This direct final rule advised the public that no adverse comments were anticipated, and that useless a written adverse comment, or a written notice of intent to submit such an adverse comment, was received within the comment period, the regulation would become effective on September 11, 1997. No adverse comments were received, and thus this notice confirms that this final rule will become effective on that date.

Issued in Kansas City, MO on July 11, 1997.

Christopher R. Blum,

Acting Manager, Air Traffic Division, Central Region.

[FR Doc. 97–21407 Filed 8–12–97; 8:45 am]

BILLING CODE 4910–13–M

DEPARTMENT OF TRANSPORTATION

Federal Aviation Administration

14 CFR Part 71

[Docket No. 97–ACE–15]

Amendment to Class E Airspace, Aurora, MO

AGENCY: Federal Aviation Administration (FAA), DOT.

ACTION: Direct final rule; request for comments.

SUMMARY: This action amends the Class E airspace area at Aurora Memorial Municipal Airport, Aurora, MO. The Federal Aviation Administration has developed a Standard Instrument Approach Procedure (SIAP) based on the Global Positioning System (GPS) which has made this change necessary. The intended effect of this rule is to provide additional controlled airspace for aircraft executing the SIAP at Aurora Memorial Municipal Airport.

DATES: Effective date: 0901 UTC, October 31, 1997.

Comment date: Comments must be received on or before September 12, 1997.

ADDRESSES: Send comments regarding the rule in triplicate to: Manager, Airspace Branch, Air Traffic Division, ACE–520, Federal Aviation Administration, Docket Number 97–ACE–15, 601 East 12th St., Kansas City, MO 64106.

The official docket may be examined in the Office of the Assistant Chief Counsel for the Central Region at the same address between 9:00 a.m. and 3:00 p.m., Monday through Friday, except Federal holidays.

An informal docket may also be examined during normal business hours in the Air Traffic Division at the same address listed above.

FOR FURTHER INFORMATION CONTACT: Kathy Randolph, Air Traffic Division, Airspace Branch, ACE–520C, Federal Aviation Administration, 601 East 12th Street, Kansas City, Missouri 64106: telephone: (816) 426–3408.

SUPPLEMENTARY INFORMATION: The FAA has developed Standard Instrument Approach Procedures (SIAP) utilizing the Global Positioning System (GPS) at Aurora Memorial Municipal Airport, Aurora, MO. The amendment to Class E airspace at Aurora, MO will provide additional controlled airspace to segregate aircraft operating under Visual Flight Rules (VFR) from aircraft operating under Instrument Flight Rules (IFR) procedures while arriving or departing the airport. The area will be depicted on appropriate aeronautical charts thereby enabling pilots to either circumnavigate the area, continue to operate under VFR to and from the airport, or otherwise comply with IFR procedures. Class E airspace areas extending from 700 feet or more above the surface of the earth are published in paragraph 6005 of FAA Order 7400.9D, dated September 4, 1996, and effective September 16, 1996, which is incorporated by reference in 14 CFR 71.1. The Class E airspace designation listed in this document will be published subsequently in the Order.

The Direct Final Rule Procedure

The FAA anticipates that this regulation will not result in adverse or negative comment and, therefore, is issuing it as a direct final rule. Previous actions of this nature have not been controversial and have not resulted in adverse comments or objections. The amendment will enhance safety for all flight operations by designating an area where VFR pilots may anticipate the

presence of IFR aircraft at lower altitudes, especially during inclement weather conditions. A greater degree of safety is achieved by depicting the area on aeronautical charts. Unless a written adverse or negative comment, or a written notice of intent to submit an adverse or negative comment is received within the comment period, the regulation will become effective on the date specified above. After the close of the comment period, the FAA will publish a document in the **Federal Register** indicating that no adverse or negative comments were received and confirming the date on which the final rule will become effective. If the FAA does receive, within the comment period, an adverse or negative comment, or written notice of intent to submit such a comment, a document withdrawing the direct final rule will be published in the **Federal Register**, and a notice of proposed rulemaking may be published with a new comment period.

Comments Invited

Although this action is in the form of a final rule and was not preceded by a notice of proposed rulemaking, comments are invited on this rule. Interested persons are invited to comment on this rule by submitting such written data, views, or arguments as they may desire. Communications should identify the Rules Docket number and be submitted in triplicate to the address specified under the caption **ADDRESSES**. All communications received on or before the closing date for comments will be considered, and this rule may be amended or withdrawn in light of the comments received. Factual information that supports the commenter's ideas and suggestions is extremely helpful in evaluating the effectiveness of this action and determining whether additional rulemaking action would be needed.

Comments are specifically invited on the overall regulatory, economic, environmental, and energy-related aspects of the rule that might suggest a need to modify the rule. All comments submitted will be available, both before and after the closing date for comments, in the Rules Docket for examination by interested persons. A report that summarizes each FAA-public contact concerned with the substance of this action will be filed in the Rules Docket.

Commenters wishing the FAA to acknowledge receipt of their comments submitted in response to this rule must submit a self-addressed, stamped postcard on which the following statement is made: ''Comments to Docket No. 97–ACE–15.'' The postcard will be date stamped and returned to the commenter.

Agency Findings

The regulations adopted herein will not have substantial direct effects on the States, on the relationship between the national government and the States, or on the distribution of power and responsibilities among the various levels of government. Therefore, in accordance with Executive Order 12612, it is determined that this final rule does not have sufficient federalism implications to warrant the preparation of a Federalism Assessment.

The FAA has determined that this regulation is noncontroversial and unlikely to result in adverse or negative comments. For the reasons discussed in the preamble, I certify that this regulation (1) is not a ''significant regulatory action'' under Executive Order 12866; (2) is not a ''significant rule'' under Department of Transportation (DOT) Regulatory Policies and Procedures (44 FR 11034, February 26, 1979); and (3) if promulgated, will not have a significant economic impact, positive or negative, on a substantial number of small entities under the criteria of the Regulatory Flexibility Act.

List of Subjects in 14 CFR Part 71

Airspace, Incorporation by reference, Navigation (air).

Adoption of the Amendment

Accordingly, the Federal Aviation Administration amends part 71 of the Federal Aviation Regulations (14 CFR part 7) as follows:

PART 71—AMENDED

1. The authority citation of part 71 continues to read as follows:

Authority: 49 U.S.C. 106(g), 40103, 40113, 40120; E.O. 10854, 24 FR 9565, 3 CFR, 1959–1963 Comp., p. 389.

§ 71.1 [Amended]

2. The incorporation by reference in 14 CFR 71.1 of Federal Aviation Administration Order 7400.9D, Airspace Designations and Reporting Points, dated September 4, 1996, and effective September 16, 1996, is amended as follows:

Paragraph 6005 Class E airspace areas extending upward from 700 feet or more above the surface of the earth.

* * * * *

ACE MO E5 Aurora, MO. [Revised]

Aura Memorial Municipal Airport, MO.
(lat. 36°57′44″ N., long. 93°41′43″ W.)

That airspace extending upward from 700 feet above the surface within a 6.3 mile radius of Aurora Memorial Municipal Airport and within 2 miles each of the 181° bearing from the Aurora Memorial Municipal Airport extending from the 6.3-mile radius to 9.3 miles south of the airport.

* * * * *

Issued in Kansas City, MO, on July 11, 1997.

Christopher R. Blum,

Acting Manager, Air Traffic Division, Central Region.

[FR Doc. 97–21406 Filed 8–12–97; 8:45 am]

BILLING CODE 4910–13–M

DEPARTMENT OF TRANSPORTATION

Office of the Secretary

14 CFR Part 241

[Docket No. OST–95–744]

RIN 2139–AA04

Passenger Origin-Destination Survey Reports

AGENCY: Office of Secretary, DOT.

ACTION: Final rule.

SUMMARY: The Department of Transportation (DOT or the Department) requires that large certificated U.S. air carriers participating in code-share arrangements report both the ticketing and operating air carriers in their quarterly Passenger Origin-Destination Survey reports. DOT needs the information to assess accurately the effects of code-sharing alliances in air transportation. Also, the Department expands by one position the field entitled ''Total Dollar Value of Ticket'' to accommodate current charges; and standardizes the format for floppy disk submissions by using the same 200 character record layout that is used for magnetic tape submissions. The latter changes are technical in nature and should reduce processing errors. This action is taken to respond to Congressional concerns on the impact of international code-share operations.

EFFECTIVE DATE: January 1, 1998.

FOR FURTHER INFORMATION CONTACT: Bernard Stankus, Office of Airline Information, K–25, Bureau of Transportation Statistics, 400 Seventh Street, SW., Washington, DC 20590, (202) 366–4387.

SUPPLEMENTARY INFORMATION:

Background

On June 24, 1996, the Bureau of Transportation Statistics (BTS) issued a Notice of Proposed Rulemaking (''NPRM'') (61 FR 32375) seeking public comments on a proposal to revise the Passenger Origin-Destination Survey

Report (Survey). BTS proposed that carriers identify the ticketed and operating carriers for each flight segment, expand the field entitled ''Total Dollar Value of Ticket'' by one position to accommodate current charges, and use the same 200 character record layout for floppy disk submissions that is used for magnetic tape submissions.

Comments to the docket were received from American Airlines, Inc. (American), Continental Airlines, Inc. (Continental); Delta Air Lines, Inc. (Delta); Northwest Airlines, Inc. (Northwest); Prestige Airways (Prestige); United Air Lines, Inc. (United); USAir; and the Airports Council International—North America (ACI–NA).

American and Northwest do not object to adding one position to the ''Total Dollar Value of Ticket'' field. American believes this action will increase the accuracy of reports by reflecting better the actual value of tickets for premium services and long, multi-segment itineraries. United did not state specific objections to expansion of the ''Total Dollar Value of Ticket'' field; however, it requested that the Department rescind a reporting directive that required carriers to use five positions when reporting fares. United believes imposition of a reporting requirement before a final rule prejudges the issues.

Northwest does not object to the standardization of the format for floppy disk submissions.

Delta, Northwest and United believe that requiring air carriers to make incremental changes to the Survey would be a waste of limited resources in light of the Department's plan to completely modernize the Survey. American believes that ''a considerable period will be required for the Department to issue a rule and transition to the new system.'' Therefore, American believes that DOT should go forward with the proposed rule.

Northwest estimates that it would require a minimum of 740 hours of reprogramming to collect and report the expanded data. Delta and United estimate 600 hours of reprogramming. Delta believes a 60-day lead time is insufficient. Northwest and United request a minimum 180-day lead time. American believes the final rule should become effective 60 days after publication. USAir could implement the rule change within 30 days, although it would prefer a 60-day lead time.

American and ACI–NA support the proposal that U.S. carriers participating in code-share arrangements report both the ticketing and operating air carriers. ACI–NA stated that U.S. airport operators need accurate domestic and international O&D data to understand market developments.

American, Delta and Prestige request that DOT clarify the proposal by clearly stating that the reporting carrier must report both operating and ticketing carriers only for segments ticketed under agreements to which it is a party.

Continental and Delta request that carriers be required to report only those tickets that the carrier actually lifts. For example, Delta states that it should not be required to report tickets that are issued and lifted by a foreign alliance partner (for travel on a flight operated by Delta), since these tickets are not in Delta's custody or control.

While Northwest strongly objects to the proposal to collect both the operating and ticketed carriers, it stated it would provide expanded data if the data that relates to its foreign code-share partners were withheld from the public. Northwest believes that these data are highly confidential and competitively sensitive. American, Delta and ACI–NA believe that code-share data involving foreign partners of U.S. carriers should not be given special confidential treatment. Delta and United believe that foreign carriers who are part of immunized alliances and required to contribute data to the Survey should be able to access Survey data. United stated:

> One of the primary purposes of granting alliances antitrust immunity is to enable the participating carriers to cooperate in planning their marketing strategies in order to compete effectively with other alliances. To that end, the partners in these alliances should be allowed to have access to the O&D Survey reports, particularly now that these reports will include details relating to the results of code-share services.

American states that foreign carriers only report a portion of their operations and should not access the data unless they report their whole system.

ACI–NA requests that DOT collect O&D data from commuter air carriers that operate aircraft with 19 or more seats. ACI–NA believes that commuter air carriers are important players in the transborder Canada and Mexico markets, U.S. Caribbean market and as feeders to international flights.

Reporting Operating and Ticketed Air Carriers

The Department does not agree with the comments that making incremental changes to the Survey when there are plans to modernize the reporting system is a misuse of the air carriers' and the Department's limited resources. American Airlines is correct in its assertion that a considerable period will be required for the Department to issue a rule and transition to the new system. The adoption of a new Survey system is not imminent; and the Department believes that adoption of a new system is three to five years away. In February 1997, the Airline Tariff Publishing Company completed the system specification and implementation guide for the transaction control number (TCN). The Department envisions that the TCN would be the foundation of the modernized Survey. However, due to personnel and budget constraints in FY 1997, the Office of Airline Information (OAI) has been unable to proceed in this venture. Once OAI obtains adequate resources, it would take one to two years to develop a prototype reporting system. The next step would be to solicit carrier volunteers for a 6 to 12 month test the system. If the test is successful, OAI would then proceed to the rulemaking process.

While the Department recognizes that there is a burden placed on carriers in implementing a reporting change, it is also aware of the increasing importance of code-share relationships within the air transportation industry. Code-sharing has become more widespread in both interstate and foreign air transportation. Congress has urged the DOT to analyze more thoroughly the effects of international code-sharing on air transportation and U.S. air carriers. Under the current Survey reporting, the DOT has difficulty evaluating the effects of code-sharing alliances on air carriers and consumers. As currently designed, the Survey does not identify both carriers on a code-share ticket. According to a reporting clarification sent to participating carriers by letter on September 11, 1995, the Survey identifies the carrier transporting the passenger (operating carrier), but not the ticketing carrier (carrier of record on the ticket). To assess accurately the effects of international code-share agreements, DOT needs to know the ticketed carrier as well as the transporting carrier for the various legs of the passenger's flight. If both code-sharing partners are identified in the survey, it will eliminate the need for special reports, as now obtained from certain U.S. carriers, regarding major international code-share alliances. These special reports are the only source of information on code-share operations. The reporting changes directed by this rulemaking will produce superior data on international and domestic code-share flights where there is a U.S. operating carrier.

In the United States, regional carrier service is growing as major carriers are handing over more service to their code-

share partners. Service to small communities can be affected by code-sharing, creating a need for DOT to monitor the impact on the communities from code-share services.

This need for international and purely domestic code-share data, coupled with the fact that many international passengers interline on domestic code-share flights, creates an urgency to the Department's need to collect information on the ticketed and operating carriers for both international and domestic tickets. This rule benefits carriers that currently have special reporting requirements for their international code-share operations. The need for maintaining and submitting data into two data bases will be eliminated. The code-share data that are reported in the special reports will now be captured in the carriers' regular Survey submission when the carriers report both the ticketing and operating air carriers. Moreover, the new reporting scheme will simplify data analysis by having data on both the ticketing and operating air carriers in a single record. Presently, analysts must compare aggregated data sets with no way of matching individual trip itineraries.

The reporting carrier is required to identify ticketed and operating carriers only for those segments in which it participates in a code-share agreement. This relieves the reporting carrier from the potentially substantial burden of reporting third-party downline code-share arrangements. In such situations, the reporting carrier may not have the information necessary to comply with such a requirement. Therefore, in the case of third party code-share arrangements, the reporting carrier would report the code of the ticketed carrier as both the ticketed and operating carrier.

First Operating Carrier Is Responsible for Survey Reporting

The first operating carrier, that is a participant in the Survey, is responsible for submitting the applicable Survey data. Since the operating carrier generally performs the passenger ticket lift at the gate, it should have the necessary information for Survey reporting.

Delta and Continental commented that carriers should be required to report only those tickets that the carrier actually lifts. Under Delta's and Continental's suggestion, certain passenger trip itineraries, that are reportable under the Survey procedures, would be omitted from the data base. This would occur when the first operating carrier is a participating carrier and the lifting carrier is a nonparticipating carrier. Under this scenario, the lifted ticket would not be reported in the Survey. This problem would be further compounded if there are two or more additional participating carriers on the ticket and the subsequent carriers believe the information has already been reported by the preceding participating carrier.

An example of this cited by Delta is when tickets are issued and lifted by a foreign alliance partner for travel on a flight operated by Delta and Delta does not have custody or control of the tickets. The Department has considered the impact of this situation and believes that excluding such tickets from the Survey would adversely affect the Department's ability to accurately assess the effects of code-share alliances. Travel arrangements, such as the example cited by Delta are a critical component in accurately assessing the impact of U.S.-foreign air carrier code-share alliances.

Because of the importance of these data, the U.S. partner of a foreign code-share alliance must ensure that when it appears as the first participating carrier on the ticket, the ticket's trip itinerary is included in the Survey. While the Department has decided not to adopt Delta's and Continental's suggestion, it does recognize that such situations do create reporting difficulties for participating carriers. In an attempt to ameliorate the problem, the Department invites U.S. air carriers that find themselves in this situation to endeavor to reach an agreement with their foreign partners that would allow for the data to be reported. This could be accomplished by the U.S. and foreign alliance partners submission of a joint request to waive the Survey reporting requirements so as to allow the foreign partner to include such traffic in its special Survey reports. The Department would look favorably on such a waiver when it is assured that all reportable Survey data will be captured and reported in the data base.

Total Dollar Value of Ticket

The Department proposed expanding the data field for the total U.S. dollar amount of fare by one position. This change was proposed to accommodate current airline passenger fares, which can exceed $9,999.

On June 14, 1996, the Department issued Accounting and Reporting Directive #203 which directed air carriers to use five positions to report total value of ticket. United Airlines filed comments objecting to the issuance of the Accounting and Reporting Directive #203 on the grounds that it prejudges the outcome of the rulemaking process. The Department disagreed with United that Accounting and Reporting Directive #203 should be rescinded. The Department determined that the change was a technical change required by the level of current air carrier fares. Carriers must have adequate space to report actual fares. Expanding the field one space gave the air carriers the space they needed to report actual fares. Because the ''Survey Record Layout'' is printed in Code of Federal Regulations, we included the expansion of the dollar value of ticket field in this rulemaking. In finalizing the proposal to expand by one position the reportable dollar amount of fare, the Department notes that United's objection to Directive #203 was strictly procedural and United did not object to the proposed change per se.

Also, to clarify the definition of ''Total dollar value of ticket'' the Department is amending Appendix A of section 241.19–7 Section V.D. (h) to identify Passenger Facility Charges as an example of an ''other charge.''

Fare-Basis Codes

In order to create sufficient space on the tape layout for the reporting of both the ticketed and operating air carriers, the Department made a technical change to the fare-basis codes. All fare-basis codes are now a single-character alpha code, as follows:

C—Unrestricted Business Class
D—Restricted Business Class
F—Unrestricted First Class
G—Restricted First Class
X—Restricted Coach/Economy Class
Y—Unrestricted Coach/Economy Class
U—Unknown (This fare category is used when none is shown on a ticket coupon, or when a fare category is not discernible, or when two or more carrier fare codes are compressed into a single stage of a passenger trip).

Confidentiality

This rule does not amend the regulations applicable to the disclosure of international Survey data (14 CFR 241.19–7 (d) and (e)). Presently, foreign air carriers do not submit regular Survey data and do not have access to international Survey data. Foreign carriers are not being required now to submit Survey data and they will continue to be denied access to international Survey data. Some foreign carriers are required to submit special reports to the Department as a condition for receiving antitrust immunity for code-sharing/alliance agreements with U.S. carriers. These special reports are granted confidential treatment and the

data from the special reports are not merged into the regular Survey.

Moreover, this rule does not amend the regulations applicable to which tickets must be reported in the Survey. Besides the technical changes, the purpose of this rule is to properly identify the operating and ticketing carriers. Northwest argues that it will be placed at a competitive disadvantage if it has to divulge the identity of the operating and ticketed carriers from its code-share operations. It stated that many of its competitors do not have code-share partners, or are not involved in foreign code-share alliances of the same nature and magnitude as Northwest's alliances.

We disagree with Northwest's argument. Presently, Northwest knows the international traffic carried by U.S. carriers that have no code-sharing agreements. These carriers have to make an educated guess at Northwest's international traffic because Northwest's actual traffic may be obscured by its code-share arrangement. This rule will properly identify all U.S. carriers' international traffic and place code-sharing and noncode-sharing carriers on a more equal playing field. While we will be able to identify code-share passengers, the code-share carriers are not required to divulge their revenue splits.

United and Delta argue that foreign code-share partners be granted access to international Survey data. This would enable the code-share carriers to cooperate in planning their marketing strategies to compete effectively with other alliances. United agrees with the Department's prior conclusion that dissemination of Survey data among reporting carriers is procompetitive. United goes on to say that its foreign air carrier partners are willing to waive the confidential treatment of their special reports if they are granted access to international Survey data.

As stated earlier, foreign carriers are denied access to international Survey data. Foreign carriers are not participating air carriers as they do not submit regular Survey data. The special reports that some foreign carriers are required to submit comprise a sample of ticketed itineraries that contain a U.S. point; therefore, the special reports do not sample a foreign carrier's entire operation. Because of this difference in the U.S. and foreign carriers' Survey submissions, the level of reported data is not comparable. Moreover, the special reports are only viewed by Department analysts on an individual basis and the reports are not merged into the regular Survey. Finally, the issue of whether foreign air carriers should submit Survey data is beyond the scope of this rulemaking.

Standardize Formats for Floppy Disk Submissions

The Department has encouraged carriers that do not have the capability to report via magnetic tape or cartridge to submit their reports via floppy diskettes. To avoid the multitude of formats currently received, this final rule prescribes, as proposed, a 200 position format with standard lengths of fields for submission of personal computer (PC) generated Survey reports. The field descriptions and field lengths will be identical to the fields prescribed for magnetic tape/cartridge submissions (see Appendix A section IX. ADP Instructions of 14 CFR 241.19). However, to simplify the PC submissions, the submitter may report the dollar value of the ticket in the field immediately after the last reported city code, rather than in positions 196–200. Submitters may separate fields by using commas or tabs (comma delimited ASCII or tab delimited ASCII format). No comments were submitted in opposition to this change.

Effective Date for Reporting

We set January 1, 1998, as the effective date for this rule. The initial reports will be due at the Department by May 15, 1998. We believe this gives the carriers sufficient time to make the necessary program changes to their data-processing system.

Survey Reporting by Commuter Air Carriers

ACI–NA requested that the Department require commuter air carriers that operate 19-seat aircraft or larger to report Survey data. While we concur with ACI–NA that commuter air carriers are important players in the transborder Canada and Mexico markets, the issue of collecting Survey data from the commuter air carrier segment of the air transportation industry is outside the scope of this rulemaking.

Cost/Benefits

Cost

Delta and United both estimate that the proposed reporting changes would require 600 hours of reprogramming to collect and report the new data. Using this estimate for the approximately 40 air carriers submitting Survey data, there would be a one-time industry burden of 24,000 hours (40 carriers × 600 hours). This estimate may double-count the burden for code-share regional carriers which have their Survey processed by their parent or an affiliated carrier. The Department estimates that the change will require a recurrent four-hour burden increase to report both the ticketed and operating air carriers. Using a $50 per hour cost, the one-time industry reprogramming cost is estimated at $1,240,000, and the recurrent reporting cost at $32,000 per year.

Benefits

The above costs would be partially offset by the elimination of the need for U.S. carriers to submit special Survey reports for their international code-share operations.

The Survey is the primary data source for international and domestic market analysis. In the last few years, the utility of the Survey has decreased as code-share operations have increased. Carriers have been mis-identified and records have been deleted for not passing edit checks. For the 12-months ended September 1996, revenues from international air services totaled over $24.5 billion. Significant code-share/alliance agreements have been approved with the grant of antitrust immunity. The Department will benefit from a reliable data system that assesses the impact of these agreements on the traveling public and other U.S. carriers. Reporting of ticketed and operating carriers will give the Department access to the data it requires to conduct more informative analyses of these agreements. While the Department cannot put a dollar value to the benefits of more reliable data, it does believe that the benefits outweigh the costs.

Rulemaking Analyses and Notices

Executive Order 12866 and DOT Regulatory Policies and Procedures

This rule is not considered a significant regulatory action under section 3(f) of Executive Order 12866 and, therefore, is not subject to review by the Office of Management and Budget.

This rule is not considered significant under the regulatory policies and procedures of the Department of Transportation (44 FR 11034). The rule will not result in any unfunded mandate to state, local or tribal governments in the aggregate, or to the private sector, of $100 million or more in any one year. The purpose of the rule is to improve the accuracy and reliability of the Survey. This objective is achieved by amending 14 CFR 241.19–7 to require the proper identification of operating and ticketed air carriers; to add one position to the field ''Total Dollar Value of Ticket;'' and to standardize the format

for floppy disk submissions. There are about 40 carriers that report the Survey.

Executive Order 12612

This rule has been analyzed in accordance with the principles and criteria contained in Executive Order 12612 (''Federalism'') and the DOT has determined the rule does not have sufficient federalism implications to warrant the preparation of a Federalism Assessment.

Regulatory Flexibility Act

I certify this rule will not have a significant economic impact on a substantial number of small entities. The amendments will affect only large certificated U.S. air carriers operating scheduled passenger service. The Department's economic regulations define ''large certificated air carrier'' as U.S. air carriers, holding a certificate issued under 49 U.S.C. 41102, that operate aircraft designed to have a maximum passenger capacity of more than 60 seats or a maximum payload capacity of more than 18,000 pounds or that operate aircraft in international service. Consequently, small carriers are not affected by this final rule.

National Environmental Protection Act

The Bureau of Transportation Statistics has analyzed the amendments for the purpose of the National Environmental Protection Act. The amendments will not have any impact on the quality of human environment.

Paperwork Reduction Act

The reporting and recordkeeping requirements associated with this rule are being sent to the Office of Management and Budget in accordance with 44 U.S.C. Chapter 35 under OMB NO: 2139–0001. *Administration:* Bureau of Transportation Statistics; *Title:* Passenger Origin-Destination Survey Report; *Need for Information:* Statistical information on airline passenger movements; *Proposed use of Information:* Balance of benefits analyses for international agreements and monitoring adequacy of air service to small communities; *Frequency:* Quarterly; *Burden Estimate:* 50,848 annual hours; *Average Annual Burden Hours per Respondent after Reprogramming is Completed*—670. For further information contact: The Office of Information Resource Management, M–32, Office of the Secretary of Transportation, 400 Seventh Street, SW., Washington, DC. 20590–0001, (202) 366–4735 or Transportation Desk Officer, Office of Management and Budget, New Executive Office Building, Room 3228, Washington, DC. 20503.

Regulation Identifier Number

A regulation identifier number (RIN) is assigned to each regulatory action listed in the Unified Agenda of Federal Regulations. The Regulatory Information Service Center publishes the Unified Agenda in April and October of each year. The RIN number 2139–AA04 contained in the heading of this document can be used to cross reference this action with the Unified Agenda.

List of Subjects in 14 CFR Part 241

Air carriers uniform system of accounts and reports.

Final Rule

Accordingly, the Bureau of Transportation Statistics amends 14 CFR part 241 Uniform System of Accounts and Reports for Large Certificated Air Carriers, as follows:

PART 241—[AMENDED]

1. Revise Sec. 19–7(b) to read as follows:

§ 19–7 Passenger origin-destination survey.

(a) * * *

(b) Those participating air carriers that have access to automatic data processing (ADP) services shall utilize magnetic tape, cartridge, floppy diskette or other ADP media for transmitting the prescribed data. Those carriers without ADP capability should contact the Office of Airline Information for further instructions ((202) 366–4373).

* * * * *

2. In Appendix A of Sec. 19–7, revise Sec. V.B to read as follows:

* * * * *

B. *Selection of Reportable Flight Coupons.* The flight coupons identified above are to be examined to isolate the reportable flight coupons, i.e. coupons from which data are to be recorded. Flight coupon data are reported only by the first honoring and participating carrier (operating carrier). Such carriers shall report the required data for the entire ticketed itinerary.

If a participating carrier has preceded an examining carrier on any stage in the trip itinerary, including any stage in a conjunction itinerary and any stage in a reissued ticket (either before or after reissue) that coupon is not reportable.

For conjunction tickets, the ticket number for the first ticket booklet determines if the conjunction tickets should be reported in the Survey. Otherwise, conjunction tickets do not require special treatment and are governed by the rules for regular tickets.

No adjustment is made in the Survey for alterations or changes in the trip itinerary subsequent to the stage covered by the reportable coupon.

3. In Appendix A of Sec. 19–7, in Sec. V.D., revise paragraph D.(1); the table in paragraph D.(2)(a); paragraph D.(2)(b); paragraph (c) and the first paragraph of (d) to read as follows:

* * * * *

D. Recording of Data from Reportable Flight Coupons. (1) The following items are to be reported from the reportable flight coupons:

(a) Point of origin,

(b) Operating carrier on each flight stage (if unknown, identify ticketed carrier),

(c) Ticketed carrier on each flight stage,

(d) Fare-basis on each flight coupon, C, D, F, G, X or Y,

(e) Points of stopover or connection (interline and intraline),

(f) Point of destination,

(g) Number of passengers, and

(h) Total dollar value of ticket (fare plus tax and other charges, such as Passenger Facility Charges).

(2) * * *

(a) * * *

000001	UCA	YV	UA	Y	JFK	TW	TW	X
Passenger(s)	Utica	Mesa Operating Carrier	United Ticketed Carrier	Fare Code	New York Kennedy Airport	TWA Operating Carrier	TWA Ticketed Carrier	Fare Code

Surface Transportation

SFO			(Blank space)
San Francisco	Operating Carrier	Ticketed Carrier	Fare Code

OAK	UA	UA	G	LAX	DL	DL	F
Oakland	United Operating Carrier	United Ticketed Carrier	Fare	Los Angeles	Delta Operating Carrier	Delta Operating Carrier	Fare Code

SLC	NW	NW	D	PHX	AA	AA	C	LAX
Salt Lake City	Northwest Operating Carrier	Northwest Ticketed Carrier	Fare Code	Phoenix	American Operating Carrier	American Ticketed Carrier	Fare Code	Los Angeles

JL	JL	C	NRT	04596
Japan Air Lines Operating Carrier	Japan Air Lines Ticketed Carrier	Fare Code	Tokyo Narita	Dollars of Fare + Tax

* * * * *

(b) All entries for operating and ticketed carriers for a coupon stage of an itinerary are to be recorded using two character IATA-assigned or DOT codes, as in the above example. Note that the fare code summary was properly inserted after the ticketed carrier's code, i.e., UA for United Air Lines and Y for unrestricted coach class service. When a two-character carrier code is shown on the ticket, record that code for the ticketed carrier. However, if a code is obviously incorrect, record the correct carrier code. If the reporting carrier does not know the operating carrier on a downline code-share segment, it would use the ticketed carrier's code for both the operating and ticketed carriers. The reporting carrier is not responsible for knowing the operating carrier of a downline code-share where it is not a party to the code-share segment. Except for the infrequent compression of data to fit into the stage-length limitation (7 or 23 stages at the carrier's option), all carrier codes are to be recorded, including data on air taxis, commuters, intra-state, and other carrier portions of itineraries. On tickets involving interchange service or other cooperative carrier arrangements, the juncture point(s) where the passenger moves from one carrier system to another is to be recorded as an intermediate point in the itinerary, even when not shown on the ticket and even though the flight may overfly the juncture point.

(c) Entries for fare-basis codes are to be taken from the ''fare basis'' and ''fare description'' portions of the ticket and simplified into the appropriate category, as shown below. No attempt shall be made to determine and record fare-basis codes for that portion of a conjunction ticket appearing in the ticket. Fare-basis codes are to be recorded in one-character alphabetic codes. The fare-basis codes are recorded as follows:

C—Unrestricted Business Class
D—Restricted Business Class
F—Unrestricted First Class
G—Restricted First Class
X—Restricted Coach/Economy Class
Y—Unrestricted Coach/Economy Class
U—Unknown (This fare category is used when none is shown on a ticket coupon, or when a fare category is not discernible, or when two or more carrier fare codes are compressed into a single stage of a passenger trip).

(d) In recording the number of passengers, each single-passenger ticket is to be recorded as one passenger. Tickets for infants under two years of age not occupying a seat are not to be counted. A revenue passenger is defined in Section X.

* * * * *

4. In Appendix A to Sec. 19–7, in Sec. IX, revise the first table in paragraph A.(1) and paragraphs B. and C. to read as follows:

* * * * *

A. * * *

(1) * * *

Field	Tape positions (from-to)	Tape record layout
PASSENGER COUNT	1–6	1. Passenger field must contain leading zeros, and no blanks.
1ST CITY CODE	7–9	
1ST OPERATING CARRIER	10–11	
1ST TICKETED CARRIER	12–13	2. City field contains the 3-letter alpha code for the airport in the first 3 positions.
FARE BASIS CODE	14	
2ND CITY CODE	15–17	
2ND OPERATING CARRIER	18–19	
2ND TICKETED CARRIER	20–21	
FARE BASIS CODE	22	
3RD CITY CODE	23–25	
3RD OPERATING CARRIER	26–27	
3RD TICKETED CARRIER	28–29	
FARE BASIS CODE	30	
4TH CITY CODE	31–33	3. Ticketed and operating carrier fields are to contain the 2 character air carrier code. An unknown carrier is to be coded ''UK'' and surface carrier is to be coded ''— —'' (dash dash).
4TH OPERATING CARRIER	34–35	
4TH TICKETED CARRIER	36–37	
FARE BASIS CODE	38	
5TH CITY CODE	39–41	
5TH OPERATING CARRIER	42–43	
5TH TICKETED CARRIER	44–45	
FARE BASIS CODE	46	
6TH CITY CODE	47–49	4. Fare basis code is a one position alpha code.
6TH OPERATING CARRIER	50–51	
6TH TICKETED CARRIER	52–53	

Field	Tape positions (from-to)	Tape record layout
FARE BASIS CODE	54	5. Portion of record for sorting, summarizing, and sequencing includes columns 7 through 200.
7TH CITY CODE	55–57	
7TH OPERATING CARRIER	58–59	
7TH TICKETED CARRIER	60–61	
FARE BASIS CODE	62	
8TH CITY CODE	63–65	6. Dollar amount in positions 196–200 is right justified.
8TH OPERATING CARRIER	66–67	
8TH TICKETED CARRIER	68–69	
FARE BASIS CODE	70	7. Positions 66–193 are used only by those carriers who want to report more data, and are not compressing to 7 stages (see Sec. V.D. (3) for compressing rules.
9TH CITY CODE	71–73	
9TH OPERATING CARRIER	74–75	
9TH TICKETED CARRIER	76–77	
FARE BASIS CODE	78	
10TH CITY CODE	79–81	
10TH OPERATING CARRIER	82–83	
10TH TICKETED CARRIER	84–85	
FARE BASIS CODE	86	
11TH CITY CODE	87–89	
11TH OPERATING CARRIER	90–91	
11TH TICKETED CARRIER	92–93	
FARE BASIS CODE	94	
12TH CITY CODE	95–97	
12TH OPERATING CARRIER	98–99	
12TH TICKETED CARRIER	100–101	
FARE BASIS CODE	102	
13TH CITY CODE	103–105	
13TH OPERATING CARRIER	106–107	
13TH TICKETED CARRIER	108–109	
FARE BASIS CODE	110	
14TH CITY CODE	111–113	
14TH OPERATING CARRIER	114–115	
14TH TICKETED CARRIER	116–117	
FARE BASIS CODE	118	
15TH CITY CODE	119–121	
15TH OPERATING CARRIER	122–123	
15TH TICKETED CARRIER	124–125	
FARE BASIS CODE	126	
16TH CITY CODE	127–129	
16TH OPERATING CARRIER	130–131	
16TH TICKETED CARRIER	132–133	
FARE BASIS CODE	134	
17TH CITY CODE	135–137	
17TH OPERATING CARRIER	138–139	
17TH TICKETED CARRIER	140–141	
FARE BASIS CODE	142	
18TH CITY CODE	143–145	
18TH OPERATING CARRIER	146–147	
18TH TICKETED CARRIER	148–149	
FARE BASIS CODE	150	
19TH CITY CODE	151–153	
19TH OPERATING CARRIER	154–155	
19TH TICKETED CARRIER	156–157	
FARE BASIS CODE	158	
20TH CITY CODE	159–161	
20TH OPERATING CARRIER	162–163	
20TH TICKETED CARRIER	164–165	
FARE BASIS CODE	166	
21ST CITY CODE	167–169	
21ST OPERATING CARRIER	170–171	
21ST TICKETED CARRIER	172–173	
FARE BASIS CODE	174	
22ND CITY CODE	175–177	
22ND OPERATING CARRIER	178–179	
22ND TICKETED CARRIER	180–181	
FARE BASIS CODE	182	
23RD CITY CODE	183–185	
23RD OPERATING CARRIER	186–187	
23RD TICKETED CARRIER	188–189	
FARE BASIS CODE	190	

Field	Tape positions (from-to)	Tape record layout
24TH CITY CODE	191–193	
BLANK	194–195	
US VALUE OF TICKET IN $	196–200	

* * * * *

B. *Editing of Tape Records.* Prior to submission of data, each carrier is requested to edit and correct its data so that its O&D Survey report may be as error-free as is reasonably practicable. The methods to be used in editing are left to the carriers' discretion, but with assistance available upon request from the Department's Office of Airline Information (OAI). To aid the carriers in maintaining a current file of editing criteria, OAI will re-issue, as needed, the city/airport-carrier file to each participating carrier. There will be a five-position field to denote the city/airport-carrier. The first three positions denotes the airport and the last two positions denotes the air carrier.

C. Standard Formats for Floppy Disk or Cartridge Submissions. Carriers should use the 200 position format with the standard length fields prescribed for magnetic media submissions. The record layout is detailed in subsection A(1) of this section. However, to simplify the PC submissions, the submitter may report the dollar value of the ticket in the field immediately after the last reported city code, rather than in positions 196–200. Submitters may separate fields by using commas or tabs (comma delimited ASCII or tab delimited ASCII format).

5. In Appendix A to Sec. 19–7, in Sec. X., revise the definition of ''Fare basis'' code and add the following new definitions to read as follows:

* * * * *

Fare basis code. The alphabetic code(s) or combination of alphabetic and numeric codes appearing in the ''Fare basis'' box on the flight coupon which describe the applicable service and discount to which the passenger is entitled. All fare basis codes are summarized into basic categories; namely C—Unrestricted Business Class, D—Restricted Business Class, F—Unrestricted First Class, G—Restricted First Class, X—Restricted Coach/Economy Class, Y—Unrestricted Coach/Economy Class, and U—Unknown (This fare category is used when none is shown on a ticket coupon, or when a fare category is not discernible, or when two or more carrier fare codes are compressed into a single stage of a passenger trip).

* * * * *

Operating air carrier. Under a code-share arrangement, the air carrier whose aircraft and flight crew are used to perform a flight segment.

* * * * *

Ticketed air carrier. Under a code-share arrangement, the air carrier whose two-character air carrier code is used for a flight segment, whether or not it actually operates the flight segment.

* * * * *

Issued in Washington, DC, on August 7, 1997.

Robert Goldner,

Acting Assistant Secretary for Aviation and International Affairs.

[FR Doc. 97–21356 Filed 8–12–97; 8:45 am]

BILLING CODE 4910–62–P

DEPARTMENT OF THE TREASURY

Fiscal Service

31 CFR Part 357

[Department of the Treasury Circular, Public Debt Series, No. 2–86]

Regulations Governing Book-Entry Treasury Bonds, Notes and Bills

AGENCY: Bureau of the Public Debt, Fiscal Service, Treasury.

ACTION: Final rule.

SUMMARY: The Department of the Treasury is publishing a final rule to its TRADES Commentary, (Appendix B of 31 CFR Part 357), to update the list of states that have enacted Revised Article 8 of the Uniform Commercial Code and that were the subject of prior notices published by Treasury in the **Federal Register**. Appendix B provides explanatory information regarding the regulations governing Treasury securities held in the commercial book-entry system, referred to as the Treasury/Reserve Automated Debt Entry System (''TRADES'').

EFFECTIVE DATE: August 13, 1997.

FOR FURTHER INFORMATION CONTACT: Walter T. Eccard, Chief Counsel (202) 219–3320, or Cynthia E. Reese, Deputy Chief Counsel, (202) 219–3320. Copies of the final rule are being made available for downloading from the Bureau of the Public Debt home page at the following address: www.publicdebt.treas.gov.

SUPPLEMENTARY INFORMATION: The final rule to govern Treasury securities held in the commercial book-entry system, or TRADES, was published August 23, 1996 (61 FR 43626), and was effective January 1, 1997. Appendix B of the rule, the TRADES Commentary, addresses the limited scope of federal preemption of state law under § 357.11 of the Section-by Section Analysis. If the choice of law rules set forth in TRADES lead to the application of the law of a state that has not yet adopted Revised Article 8 of the Uniform Commercial Code (Revised Article 8) then TRADES applies Revised Article 8 (as approved by the American Law Institute and the National Conference of Commissioners on Uniform State Laws, or the ''uniform version''). Treasury indicated in the preamble to the final rule that if a state passes a version of Revised Article 8 that is substantially identical to the uniform version, then reference to the uniform version would no longer be required. In the TRADES Commentary, Treasury further stated that it had reviewed the laws of those states which had adopted Revised Article 8 as of the date of the publication of the final rule and had concluded that they were substantially identical to the uniform version. Those 28 states were enumerated and listed by name alphabetically in a footnote.

Treasury further indicated that it would publish in the **Federal Register** a notice setting forth its conclusion as to whether additional state enactments of Revised Article 8 are ''substantially identical'' to the uniform version for purposes of the regulations. Treasury has published such notices with respect to California (62 FR 26, January 2, 1997) and the District of Columbia (62 FR 34010, June 18, 1997). The TRADES Commentary further states that Treasury will, on an annual basis, amend the Commentary (Appendix B) to reflect subsequent enactments. Accordingly, this final rule amends Appendix B to reflect the addition of California and the District of Columbia to the list of states enumerated therein. In addition we are making a technical amendment that corrects the footnote in Appendix B to the rule we published in 61 FR 43626, August 23, 1996.

Procedural Requirements

This final rule does not meet the criteria for a ''significant regulatory action'' pursuant to Executive Order 12866. The notice and public comment procedures requirements of the Administrative Procedure Act are inapplicable, pursuant to 5 U.S.C. 553(a)(2).

As no notice of proposed rulemaking was required, the provisions of the Regulatory Flexibility Act (5 U.S.C. 601, *et seq.*) do not apply.

There are no collections of information contained in this final rule. Therefore, the Paperwork Reduction Act does not apply.

List of Subjects in 31 CFR Part 357

Bonds, Electronic funds transfer, Federal Reserve System, Government securities, Incorporation by reference, Securities.

For the reasons set forth in the preamble, Title 31, Chapter II, Subchapter B, Part 357 is amended as follows:

PART 357—REGULATIONS GOVERNING BOOK-ENTRY TREASURY BONDS, NOTES AND BILLS

1. The authority citation for Part 357 continues to read as follows:

Authority: 31 U.S.C. chapter 31; 5 U.S.C. 301; 12 U.S.C. 391.

Appendix B to Part 357—[Amended]

2. Appendix B to part 357 is amended by redesignating the second footnote 9 through footnote 17 as footnote 10 through 18.

3. Appendix B to part 357 is further amended in the Section-by-Section Analysis for § 357.11(b), in the third paragraph, by revising the fourth sentence and redesignated footnote 11 to read as follows:

Appendix B to Part 357—TRADES Commentary

* * * * *

Section-by-Section Analysis

* * * * *

Section 357.11—Law Governing Other Interests

* * * * *

(b) *Limited Scope of Federal Preemption*

* * * * *

* * * Treasury has determined that the versions of Article 8 passed by 30 [11] states that have enacted Article 8 meet this standard. * * *

Dated: July 17, 1997.

Gerald Murphy,

Fiscal Assistant Secretary.

[FR Doc. 97–21405 Filed 8–12–97; 8:45 am]

BILLING CODE 4810–39–W

[11] Alabama, Alaska, Arizona, Arkansas, California, Colorado, District of Columbia, Idaho, Illinois, Iowa, Indiana, Kansas, Kentucky, Louisiana, Maryland, Massachusetts, Minnesota, Mississippi, Nebraska, New Mexico, Oklahoma, Oregon, Pennsylvania, Texas, Utah, Vermont, Virginia, Washington, West Virginia, Wyoming.

DEPARTMENT OF TRANSPORTATION

Coast Guard

33 CFR Part 100

[CGD08–97–024]

RIN 2115–AE46

Special Local Regulations; Steubenville Regatta, Steubenville, Ohio

AGENCY: Coast Guard, DOT.

ACTION: Notice of implementation.

SUMMARY: This notice implements the special local regulations of 33 CFR 100.201, ''Annual marine events within the Second Coast Guard District'' for the ''Steubenville Regatta.'' 33 CFR 100.201 (Table One, No. 35). In 1996, the Second Coast Guard District was disestablished, and the Eighth District boundaries were expanded to include the prior Second District area of responsibility. The Eighth District Commander now exercises authority over the combined geographical region. 61 FR 29958 (June 13, 1996). This event will be held in Steubenville, Ohio at Ohio River mile 65.0–67.0 from August 15–17, 1997. Implementation of section 33 CFR 100.201 (Table One, No. 35) is necessary to provide for the safety of life on navigable waters during the event.

EFFECTIVE DATES: Section 33 CFR 100.201 (Table One, No. 35) is effective on the following dates/times:

8 a.m. until 11 p.m. on August 15, 1997
8 a.m. until 11 p.m. on August 16, 1997
8 a.m. until 11 p.m. on August 17, 1997

FOR FURTHER INFORMATION CONTACT: LT T.J. Ferring, Marine Safety Office, Pittsburgh, PA, Tel: (412) 644–5808.

SUPPLEMENTARY INFORMATION: The Steubenville Regatta is an annual river festival sponsored by the Steubenville Regatta and Racing Association, Inc. These special local regulations permit the Coast Guard to control vessel traffic in order to ensure the safety of spectators and participants. Spectators will be able to view the event from areas designated by the sponsor. Non-participating vessels will be able to transit the area during breaks between scheduled events.

Dated: July 29, 1997.

T.W. Josiah,

Rear Admiral, U.S. Coast Guard Commander, Eighth Coast Guard District.

[FR Doc. 97–21358 Filed 8–12–97; 8:45 am]

BILLING CODE 4910–14–M

ENVIRONMENTAL PROTECTION AGENCY

40 CFR Part 180

[OPP–300525; FRL–5735–2]

RIN 2070–AB78

Propiconazole; Pesticide Tolerances for Emergency Exemptions

AGENCY: Environmental Protection Agency (EPA).

ACTION: Final rule.

SUMMARY: This regulation establishes time-limited tolerances for combined residues of propiconazole and its metabolites determined as 2,4-dichlorobenzoic acid (DCBA) in or on grain sorghum, grain; grain sorghum, stover; and sorghum aspirated grain fractions . This action is in response to EPA's granting of emergency exemptions under section 18 of the Federal Insecticide, Fungicide, and Rodenticide Act authorizing use of the pesticide on grain sorghum. This regulation establishes maximum permissible levels for residues of propiconazole in this food commodity pursuant to section 408(l)(6) of the Federal Food, Drug, and Cosmetic Act, as amended by the Food Quality Protection Act of 1996. The tolerances will expire and are revoked on July 31, 1998.

DATES: This regulation is effective August 13, 1997. Objections and requests for hearings must be received by EPA on or before October 14, 1997.

ADDRESSES: Written objections and hearing requests, identified by the docket control number, [OPP–300525], must be submitted to: Hearing Clerk (1900), Environmental Protection Agency, Rm. M3708, 401 M St., SW., Washington, DC 20460. Fees accompanying objections and hearing requests shall be labeled ''Tolerance Petition Fees'' and forwarded to: EPA Headquarters Accounting Operations Branch, OPP (Tolerance Fees), P.O. Box 360277M, Pittsburgh, PA 15251. A copy of any objections and hearing requests filed with the Hearing Clerk identified by the docket control number, [OPP–300525], must also be submitted to: Public Information and Records Integrity Branch, Information Resources and Services Division (7506C), Office of

Pesticide Programs, Environmental Protection Agency, 401 M St., SW., Washington, DC 20460. In person, bring a copy of objections and hearing requests to Rm. 1132, CM #2, 1921 Jefferson Davis Hwy., Arlington, VA.

A copy of objections and hearing requests filed with the Hearing Clerk may also be submitted electronically by sending electronic mail (e-mail) to: opp-docket@epamail.epa.gov. Copies of objections and hearing requests must be submitted as an ASCII file avoiding the use of special characters and any form of encryption. Copies of objections and hearing requests will also be accepted on disks in WordPerfect 5.1 file format or ASCII file format. All copies of objections and hearing requests in electronic form must be identified by the docket control number [OPP–300525]. No Confidential Business Information (CBI) should be submitted through e-mail. Electronic copies of objections and hearing requests on this rule may be filed online at many Federal Depository Libraries.

FOR FURTHER INFORMATION CONTACT: By mail: Stephen Schaible, Registration Division 7505C, Office of Pesticide Programs, Environmental Protection Agency, 401 M St., SW., Washington, DC 20460. Office location, telephone number, and e-mail address: Crystal Mall #2, 1921 Jefferson Davis Hwy., Arlington, VA, (703) 308–9362, e-mail: schaible.stephen@epamail.epa.gov.

SUPPLEMENTARY INFORMATION: EPA, on its own initiative, pursuant to section 408(e) and (l)(6) of the Federal Food, Drug, and Cosmetic Act (FFDCA), 21 U.S.C. 346a(e) and (l)(6), is establishing tolerances for combined residues of the fungicide propiconazole, 1-[[2-(2,4-dichlorophenyl)-4-propyl-1,3-dioxolan-2-yl]methyl]-1*H*-1,2,4-triazole and its metabolites determined as 2,4-dichlorobenzoic acid (DCBA), in or on grain sorghum, grain at 0.2 parts per million (ppm); grain sorghum, stover at 1.5 ppm; and sorghum aspirated grain fractions at 20 ppm . These tolerances will expire and are revoked on July 31, 1998. After July 31, 1998, EPA will publish a document in the **Federal Register** to remove the revoked tolerances from the Code of Federal Regulations.

I. Background and Statutory Authority

The Food Quality Protection Act of 1996 (FQPA) (Pub. L. 104–170) was signed into law August 3, 1996. FQPA amends both the Federal Food, Drug, and Cosmetic Act (FFDCA), 21 U.S.C. 301 *et seq*., and the Federal Insecticide, Fungicide, and Rodenticide Act (FIFRA), 7 U.S.C. 136 *et seq*. The FQPA amendments went into effect immediately. Among other things, FQPA amends FFDCA to bring all EPA pesticide tolerance-setting activities under a new section 408 with a new safety standard and new procedures. These activities are described below and discussed in greater detail in the final rule establishing the time-limited tolerance associated with the emergency exemption for use of propiconazole on sorghum (61 FR 58135, November 13, 1996)(FRL-5572-9).

New section 408(b)(2)(A)(i) of the FFDCA allows EPA to establish a tolerance (the legal limit for a pesticide chemical residue in or on a food) only if EPA determines that the tolerance is ''safe.'' Section 408(b)(2)(A)(ii) defines ''safe'' to mean that ''there is a reasonable certainty that no harm will result from aggregate exposure to the pesticide chemical residue, including all anticipated dietary exposures and all other exposures for which there is reliable information.'' This includes exposure through drinking water and in residential settings, but does not include occupational exposure. Section 408(b)(2)(C) requires EPA to give special consideration to exposure of infants and children to the pesticide chemical residue in establishing a tolerance and to ''ensure that there is a reasonable certainty that no harm will result to infants and children from aggregate exposure to the pesticide chemical residue***.''

Section 18 of FIFRA authorizes EPA to exempt any Federal or State agency from any provision of FIFRA, if EPA determines that ''emergency conditions exist which require such exemption.'' This provision was not amended by FQPA. EPA has established regulations governing such emergency exemptions in 40 CFR part 166.

Section 408(l)(6) of the FFDCA requires EPA to establish a time-limited tolerance or exemption from the requirement for a tolerance for pesticide chemical residues in food that will result from the use of a pesticide under an emergency exemption granted by EPA under section 18 of FIFRA. Such tolerances can be established without providing notice or period for public comment.

Because decisions on section 18-related tolerances must proceed before EPA reaches closure on several policy issues relating to interpretation and implementation of the FQPA, EPA does not intend for its actions on such tolerance to set binding precedents for the application of section 408 and the new safety standard to other tolerances and exemptions.

II. Emergency Exemption for Propiconazole on Grain Sorghum and FFDCA Tolerances

Sorghum ergot (*Claviceps africana*) is a new disease to grain sorghum in the United States. It was detected on sorghum in the Rio Grande Valley of Texas in February and March of 1997. The fungus infects unfertilized flower ovaries, with the resulting fungal growth eventually producing a sticky fluid known as honeydew. In sorghum grown for hybrid seed production, the disease reduces seed yield by decreasing the availability of viable pollen. In sorghum grown for grain, the disease lowers grain yield and quality, makes threshing difficult, and reduces seed germination. Currently there are no products registered for sorghum which are effective in controlling ergot, nor are there feasible alternative control practices. Efficacy data from Brazil show that the triazole group of fungicides was most successful at controlling the disease; based on limited data submitted by the registrant, propiconazole appears effective against sorghum ergot. EPA has authorized under FIFRA section 18 the use of propiconazole on grain sorghum for control of sorghum ergot in Illinois, Kansas, Nebraska, New Mexico, Oklahoma, and Texas. After having reviewed these submissions, EPA concurs that emergency conditions exist for these states.

As part of its assessment of these emergency exemptions, EPA assessed the potential risks presented by residues of propiconazole in or on grain sorghum commodities. In doing so, EPA considered the new safety standard in FFDCA section 408(b)(2), and EPA decided that the necessary tolerances under FFDCA section 408(l)(6) would be consistent with the new safety standard and with FIFRA section 18. Consistent with the need to move quickly on the emergency exemptions in order to address an urgent non-routine situation and to ensure that the resulting food is safe and lawful, EPA is issuing these tolerances without notice and opportunity for public comment under section 408(e), as provided in section 408(l)(6). Although these tolerance will expire and are revoked on July 31, 1998, under FFDCA section 408(l)(5), residues of the pesticide not in excess of the amounts specified in the tolerances remaining in or on grain sorghum, grain; grain sorghum, stover; and sorghum aspirated grain fractions after that date will not be unlawful, provided the pesticide is applied in a manner that was lawful under FIFRA. EPA will take action to revoke these tolerances earlier

if any experience with, scientific data on, or other relevant information on this pesticide indicate that the residues are not safe.

Because these tolerances are being approved under emergency conditions EPA has not made any decisions about whether propiconazole meets EPA's registration requirements for use on grain sorghum or whether permanent tolerances for this use would be appropriate. Under these circumstances, EPA does not believe that these tolerances serve as a basis for registration of propiconazole by a State for special local needs under FIFRA section 24(c). Nor do these tolerances serve as the basis for any State other than Illinois, Kansas, Nebraska, New Mexico, Oklahoma, and Texas to use this pesticide on this crop under section 18 of FIFRA without following all provisions of section 18 as identified in 40 CFR part 166. For additional information regarding the emergency exemptions for propiconazole, contact the Agency's Registration Division at the address provided above.

III. Risk Assessment and Statutory Findings

EPA performs a number of analyses to determine the risks from aggregate exposure to pesticide residues. First, EPA determines the toxicity of pesticides based primarily on toxicological studies using laboratory animals. These studies address many adverse health effects, including (but not limited to) reproductive effects, developmental toxicity, toxicity to the nervous system, and carcinogenicity. Second, EPA examines exposure to the pesticide through the diet (e.g., food and drinking water) and through exposures that occur as a result of pesticide use in residential settings.

A. Toxicity

1. *Threshold and non-threshold effects.* For many animal studies, a dose response relationship can be determined, which provides a dose that causes adverse effects (threshold effects) and doses causing no observed effects (the ''no-observed effect level'' or ''NOEL'').

Once a study has been evaluated and the observed effects have been determined to be threshold effects, EPA generally divides the NOEL from the study with the lowest NOEL by an uncertainty factor (usually 100 or more) to determine the Reference Dose (RfD). The RfD is a level at or below which daily aggregate exposure over a lifetime will not pose appreciable risks to human health. An uncertainty factor (sometimes called a ''safety factor'') of 100 is commonly used since it is assumed that people may be up to 10 times more sensitive to pesticides than the test animals, and that one person or subgroup of the population (such as infants and children) could be up to 10 times more sensitive to a pesticide than another. In addition, EPA assesses the potential risks to infants and children based on the weight of the evidence of the toxicology studies and determines whether an additional uncertainty factor is warranted. Thus, an aggregate daily exposure to a pesticide residue at or below the RfD (expressed as 100 percent or less of the RfD) is generally considered acceptable by EPA. EPA generally uses the RfD to evaluate the chronic risks posed by pesticide exposure. For shorter term risks, EPA calculates a margin of exposure (MOE) by dividing the estimated human exposure into the NOEL from the appropriate animal study. Commonly, EPA finds MOEs lower than 100 to be unacceptable. This hundredfold MOE is based on the same rationale as the hundredfold uncertainty factor.

Lifetime feeding studies in two species of laboratory animals are conducted to screen pesticides for cancer effects. When evidence of increased cancer is noted in these studies, the Agency conducts a weight of the evidence review of all relevant toxicological data including short-term and mutagenicity studies and structure activity relationship. Once a pesticide has been classified as a potential human carcinogen, different types of risk assessments (e.g., linear low dose extrapolations or MOE calculation based on the appropriate NOEL) will be carried out based on the nature of the carcinogenic response and the Agency's knowledge of its mode of action.

2. *Differences in toxic effect due to exposure duration.* The toxicological effects of a pesticide can vary with different exposure durations. EPA considers the entire toxicity data base, and based on the effects seen for different durations and routes of exposure, determines which risk assessments should be done to assure that the public is adequately protected from any pesticide exposure scenario. Both short and long durations of exposure are always considered. Typically, risk assessments include ''acute'', ''short-term'', ''intermediate term'', and ''chronic'' risks. These assessments are defined by the Agency as follows.

Acute risk, by the Agency's definition, results from 1-day consumption of food and water, and reflects toxicity which could be expressed following a single oral exposure to the pesticide residues. High end exposure to food and water residues are typically assumed.

Short-term risk results from exposure to the pesticide for a period of 1-7 days, and therefore overlaps with the acute risk assessment. Historically, this risk assessment was intended to address primarily dermal and inhalation exposure which could result, for example, from residential pesticide applications. However, since enaction of FQPA, this assessment has been expanded to include both dietary and non-dietary sources of exposure, and will typically consider exposure from food, water, and residential uses when reliable data are available. In this assessment, risks from average food and water exposure, and high-end residential exposure, are aggregated. High-end exposures from all three sources are not typically added because of the very low probability of this occurring in most cases, and because the other conservative assumptions built into the assessment assure adequate protection of public health. However, for cases in which high-end exposure can reasonably be expected from multiple sources (e.g. frequent and widespread homeowner use in a specific geographical area), multiple high-end risks will be aggregated and presented as part of the comprehensive risk assessment/characterization. Since the toxicological endpoint considered in this assessment reflects exposure over a period of at least 7 days, an additional degree of conservatism is built into the assessment; i.e., the risk assessment nominally covers 1-7 days exposure, and the toxicological endpoint/NOEL is selected to be adequate for at least 7 days of exposure. (Toxicity results at lower levels when the dosing duration is increased.)

Intermediate-term risk results from exposure for 7 days to several months. This assessment is handled in a manner similar to the short-term risk assessment.

Chronic risk assessment describes risk which could result from several months to a lifetime of exposure. For this assessment, risks are aggregated considering average exposure from all sources for representative population subgroups including infants and children.

B. Aggregate Exposure

In examining aggregate exposure, FFDCA section 408 requires that EPA take into account available and reliable information concerning exposure from the pesticide residue in the food in question, residues in other foods for which there are tolerances, residues in groundwater or surface water that is

consumed as drinking water, and other non-occupational exposures through pesticide use in gardens, lawns, or buildings (residential and other indoor uses). Dietary exposure to residues of a pesticide in a food commodity are estimated by multiplying the average daily consumption of the food forms of that commodity by the tolerance level or the anticipated pesticide residue level. The Theoretical Maximum Residue Contribution (TMRC) is an estimate of the level of residues consumed daily if each food item contained pesticide residues equal to the tolerance. In evaluating food exposures, EPA takes into account varying consumption patterns of major identifiable subgroups of consumers, including infants and children. The TMRC is a ''worst case'' estimate since it is based on the assumptions that food contains pesticide residues at the tolerance level and that 100% of the crop is treated by pesticides that have established tolerances. If the TMRC exceeds the RfD or poses a lifetime cancer risk that is greater than approximately one in a million, EPA attempts to derive a more accurate exposure estimate for the pesticide by evaluating additional types of information (anticipated residue data and/or percent of crop treated data) which show, generally, that pesticide residues in most foods when they are eaten are well below established tolerances.

Percent of crop treated estimates are derived from federal and private market survey data. Typically, a range of estimates are supplied and the upper end of this range is assumed for the exposure assessment. By using this upper end estimate of percent of crop treated, the Agency is reasonably certain that exposure is not understated for any significant subpopulation group. Further, regional consumption information is taken into account through EPA's computer-based model for evaluating the exposure of significant subpopulations including several regional groups, to pesticide residues. For this pesticide, the most highly exposed population subgroup (non-nursing infants less than 1 year old) was not regionally based.

IV. Aggregate Risk Assessment and Determination of Safety

Consistent with section 408(b)(2)(D), EPA has reviewed the available scientific data and other relevant information in support of this action, EPA has sufficient data to assess the hazards of propiconazole and to make a determination on aggregate exposure, consistent with section 408(b)(2), for time-limited tolerances for combined residues of propiconazole, 1-[[2-(2,4-dichlorophenyl)-4-propyl-1,3-dioxolan-2-yl]methyl]-1*H*-1,2,4-triazole and its metabolites determined as 2,4-dichlorobenzoic acid (DCBA) on grain sorghum, grain at 0.2 ppm; grain sorghum, stover at 1.5 ppm; and sorghum aspirated grain fractions at 20 ppm. EPA's assessment of the dietary exposures and risks associated with establishing the tolerances follows.

A. Toxicological Profile

EPA has evaluated the available toxicity data and considered its validity, completeness, and reliability as well as the relationship of the results of the studies to human risk. EPA has also considered available information concerning the variability of the sensitivities of major identifiable subgroups of consumers, including infants and children. The nature of the toxic effects caused by propiconazole are discussed below.

1. *Acute toxicity*. For acute dietary risk assessment, EPA recommends use of the developmental NOEL of 30 mg/kg/day from a developmental toxicity study in rats. The LEL of 90 mg/kg/day was based on the increased incidence of unossified sternebrae, rudimentary ribs, and shortened or absent renal papillae. This risk assessment will evaluate acute dietary risk to the population of concern, females 13 years and older.

2. *Short - and intermediate - term toxicity*. For short- and intermediate-term dermal MOE calculations, EPA recommends use of the developmental NOEL of 30 mg/kg/day from the developmental toxicity study in rats. For short- and intermediate-term inhalation MOE calculations, EPA recommends use of the NOEL of 92.8 mg/kg/day, the highest dose tested (HDT) from the 5-day inhalation toxicity study in rats.

3. *Chronic toxicity*. EPA has established the RfD for propiconazole at 0.013 milligrams/kilogram/day (mg/kg/day). This RfD is based on a NOEL of 1.25 mg/kg/day taken from a 1–year feeding study in dogs. The effect seen at the LEL of 6.25 mg/kg/day is mild irritation of the gastric mucosa. An uncertainty factor of 100 was added to take into account interspecies and intraspecies variation.

4. *Carcinogenicity*. Propiconazole has been classified as a Group C, ''possible human carcinogen,'' chemical by the Agency. EPA recommends using the RfD approach for quantitation of human risk. Therefore, the RfD is deemed protective of all chronic human health effects, including cancer.

B. Exposures and Risks

1. *From food and feed uses*. Tolerances have been established (40 CFR 180.434) for the combined residues of propiconazole, 1-[[2-(2,4-dichlorophenyl)-4-propyl-1,3-dioxolan-2-yl]methyl]-1*H*-1,2,4-triazole and its metabolites determined as 2,4-dichlorobenzoic acid (DCBA), in or on a variety of raw agricultural commodities. Secondary residues in animal commodities are not expected to exceed existing tolerances as a result of the proposed use. Risk assessments were conducted by EPA to assess dietary exposures and risks from propiconazole as follows:

i. *Acute exposure and risk*. Acute dietary risk assessments are performed for a food-use pesticide if a toxicological study has indicated the possibility of an effect of concern occurring as a result of a 1 day or single exposure. The acute dietary (food only) risk assessment assumed tolerance level residues and 100% crop treated. The resulting high-end exposure estimate of 0.01 mg/kg/day, which results in a dietary (food only) MOE of 3,000 for females 13+ years old, should be viewed as conservative; refinement using anticipated residue values and percent crop-treated data in conjunction with Monte Carlo analysis would result in a lower acute dietary exposure estimate.

ii. *Chronic exposure and risk*. For the purpose of assessing chronic dietary exposure from propiconazole, EPA assumed anticipated residues and percent of crop treated refinements for many of the existing uses to estimate the Anticipated Residue Contribution (ARC) from existing and proposed uses. While more refined than TMRC exposure estimates, the assumptions of tolerance level residues and 100% of crop treated for the proposed use and numerous existing uses still result in overestimation of exposure. Based on the above assumptions, chronic dietary exposure to the U.S. population represents 7% of the RfD. Dietary exposure to the subgroup most highly exposed, non-nursing infants less than 1 year, utilizes 20% of the RfD.

2. *From drinking water*. Review of terrestrial field dissipation data indicates that propiconazole is persistent and leaches into groundwater. There is no established Maximum Contaminant Level (MCL) for residues of propiconazole in drinking water. No drinking water health advisory levels have been established for propiconazole.

Because the Agency lacks sufficient water-related exposure data to complete a comprehensive drinking water risk

assessment for many pesticides, EPA has commenced and nearly completed a process to identify a reasonable yet conservative bounding figure for the potential contribution of water-related exposure to the aggregate risk posed by a pesticide. In developing the bounding figure, EPA estimated residue levels in water for a number of specific pesticides using various data sources. The Agency then applied the estimated residue levels, in conjunction with appropriate toxicological endpoints (RfD's or acute dietary NOEL's) and assumptions about body weight and consumption, to calculate, for each pesticide, the increment of aggregate risk contributed by consumption of contaminated water. While EPA has not yet pinpointed the appropriate bounding figure for exposure from contaminated water, the ranges the Agency is continuing to examine are all below the level that would cause propiconazole to exceed the RfD if the tolerance being considered in this document were granted. The Agency has therefore concluded that the potential exposures associated with propiconazole in water, even at the higher levels the Agency is considering as a conservative upper bound, would not prevent the Agency from determining that there is a reasonable certainty of no harm if the tolerance is granted.

3. *From non-dietary exposure.* Propiconazole is currently registered for use on the following residential non-food sites: a preservative treatment for finished wood (window moldings, fences, etc.), and for ornamental turf and lawns. While EPA does not consider that these types of outdoor residential uses constitute a chronic residential exposure scenario, EPA acknowledges that there may be short- and intermediate-term, non-occupational exposure scenarios. Toxicological endpoints have been identified for short- and intermediate-term risk assessment. However, no acceptable, reliable data to assess these potential risks are available at this time. Given the time-limited nature of this request, the need to make emergency exemption decisions quickly, and the significant scientific uncertainty at this time about how to aggregate non-occupational exposure with dietary exposure, the Agency will make the safety determination for these tolerances based on those factors which it can reasonably integrate into a risk assessment. What limited data are available to the Agency suggest that residential use of propiconazole by homeowners is quite limited.

4. *Cumulative exposure to substances with common mechanism of toxicity.* Propiconazole is a member of the triazole class of pesticides. Other triazoles include bitertanol, cyproconazole, diclobutrazole, difenoconazole, diniconazole, fenbuconazole, flusilazole, hexaconazole, myclobutanil, penconazole, tebuconazole, tetraconazole, triadimefon, and triadimenol. Section 408(b)(2)(D)(v) requires that, when considering whether to establish, modify, or revoke a tolerance, the Agency consider ''available information'' concerning the cumulative effects of a particular pesticide's residues and ''other substances that have a common mechanism of toxicity.'' The Agency believes that ''available information'' in this context might include not only toxicity, chemistry, and exposure data, but also scientific policies and methodologies for understanding common mechanisms of toxicity and conducting cumulative risk assessments. For most pesticides, although the Agency has some information in its files that may turn out to be helpful in eventually determining whether a pesticide shares a common mechanism of toxicity with any other substances, EPA does not at this time have the methodologies to resolve the complex scientific issues concerning commonmechanism of toxicity in a meaningful way. EPA has begun a pilot process to study this issue further through the examination of particular classes of pesticides. The Agency hopes that the results of this pilot process will increase the Agency's scientific understanding of this question such that EPA will be able to develop and apply scientific principles for better determining which chemicals have a common mechanism of toxicity and evaluating the cumulative effects of such chemicals. The Agency anticipates, however, that even as its understanding of the science of common mechanisms increases, decisions on specific classes of chemicals will be heavily dependent on chemical specific data, much of which may not be presently available.

Although at present the Agency does not know how to apply the information in its files concerning common mechanism issues to most risk assessments, there are pesticides as to which the common mechanism issues can be resolved. These pesticides include pesticides that are toxicologically dissimilar to existing chemical substances (in which case the Agency can conclude that it is unlikely that a pesticide shares a common mechanism of activity with other substances) and pesticides that produce a common toxic metabolite (in which case common mechanism of activity will be assumed).

EPA does not have, at this time, available data to determine whether propiconazole has a common mechanism of toxicity with other substances or how to include this pesticide in a cumulative risk assessment. Unlike other pesticides for which EPA has followed a cumulative risk approach based on a common mechanism of toxicity, propiconazole does not appear to produce a toxic metabolite produced by other substances. For the purposes of this tolerance action, therefore, EPA has not assumed that propiconazole has a common mechanism of toxicity with other substances.

C. Aggregate Risks and Determination of Safety for U.S. Population

1. *Acute risk.* For the population subgroup of concern, females 13+ years and older, the calculated MOE is 3,000. The Agency acknowledges the potential for exposure to propiconazole in drinking water, but does not expect that exposure would result in an aggregate MOE (food plus water) that would exceed the Agency's level of concern for acute dietary exposure.

2. *Chronic risk.* Using the ARC exposure assumptions described above, EPA has concluded that aggregate exposure to propiconazole from food will utilize 7% of the RfD for the U.S. population. The major identifiable subgroup with the highest aggregate exposure is non-nursing infants less than 1 year (discussed below). EPA generally has no concern for exposures below 100% of the RfD because the RfD represents the level at or below which daily aggregate dietary exposure over a lifetime will not pose appreciable risks to human health. Despite the potential for exposure to propiconazole in drinking water and from non-dietary, non-occupational exposure, EPA does not expect the aggregate exposure to exceed 100% of the RfD. EPA concludes that there is a reasonable certainty that no harm will result from aggregate exposure to propiconazole residues.

3. *Short- and intermediate-term risk.* Short- and intermediate-term aggregate risk estimates take into account exposure from chronic dietary food and water (considered to be a background exposure level) plus potential indoor and outdoor residential exposures. Based on the large acute dietary MOE for the subgroup of concern (3,000 for females 13+), the small percentage of the RfD occupied for the U.S. population (7%), and the minimal non-dietary exposure, in our best scientific

judgment, the short- and intermediate-term aggregate risk from exposure to propiconazole will not exceed the Agency's level of concern.

D. Aggregate Cancer Risk for U.S. Population

Propiconazole has been classified as a Group C, ''possible human carcinogen,'' chemical by the Agency. EPA recommends using the RfD approach for quantification of human risk. Human health risk concerns due to long-term exposure to propiconazole residues are adequately addressed by the aggregate chronic exposure analysis using the RfD.

E. Aggregate Risks and Determination of Safety for Infants and Children

1. *Safety factor for infants and children*— a. *In general*. In assessing the potential for additional sensitivity of infants and children to residues of propiconazole, EPA considered data from developmental toxicity studies in the rat and rabbit and a two-generation reproduction study in the rat. The developmental toxicity studies are designed to evaluate adverse effects on the developing organism resulting from maternal pesticide exposure during gestation. Reproduction studies provide information relating to effects from exposure to the pesticide on the reproductive capability of mating animals and data on systemic toxicity.

FFDCA section 408 provides that EPA shall apply an additional tenfold margin of safety for infants and children in the case of threshold effects to account for pre-and post-natal toxicity and the completeness of the database unless EPA determines that a different margin of safety will be safe for infants and children. Margins of safety are incorporated into EPA risk assessments either directly through use of a MOE analysis or through using uncertainty (safety) factors in calculating a dose level that poses no appreciable risk to humans. EPA believes that reliable data support using the standard hundredfold safety factor (usually 100 for combined inter- and intra-species variability)) and not the additional tenfold safety factor when EPA has a complete data base under existing guidelines and when the severity of the effect in infants or children or the potency or unusual toxic properties of a compound do not raise concerns regarding the adequacy of the standard MOE/safety factor.

b. *Developmental toxicity studies*. In the developmental toxicity study in rats, the maternal (systemic) NOEL was 30 mg/kg/day. The maternal LEL of 90 mg/kg/day was based on reduced body weight gain and rales in females. The developmental NOEL was also 30 mg/kg/day. The developmental LEL of 90 mg/kg/day was based on the increased incidence of unossified sternebrae, rudimentary ribs, and shortened or absent renal papillae. In the rabbit developmental toxicity study, the maternal (systemic) NOEL was 100 mg/kg/day. The maternal LEL of 250 mg/kg/day was based on decreased food consumption and body weight gain. There was also an increased incidence of abortion at 400 mg/kg/day. The developmental NOEL was 400 mg/kg/day (HDT), based upon the lack of developmental delays or alterations.

c. *Reproductive toxicity study*. From the 2-generation reproductive toxicity study in rats, the parental (systemic) LEL of 5 mg/kg/day (lowest dose tested) was based on the increased incidence of hepatic ''clear-cell change'' at all dose levels; additionally, at 25 and 125 mg/kg/day, decreased body weights, decreased food consumption, and/or an increased incidence of hepatic cellular swelling were observed. A NOEL for parental toxicity was not determined. The reproductive/ developmental NOEL was 25 mg/kg/day. The reproductive LEL of 125 mg/kg/day was based on decreased offspring survival of second generation (F2) pups, and on decreased body weight throughout lactation, and an increase in the incidence of hepatic cellular swelling for both generations of offspring (F1 and F2 pups).

d. *Pre- and post-natal sensitivity*. The pre- and post-natal toxicology data base for propiconazole is complete with respect to current toxicological data requirements. There are no pre- or post-natal toxicity concerns for infants and children, based on the results of the rat and rabbit developmental toxicity studies and the 2-generation rat reproductive study. Based on the developmental and reproductive toxicity studies discussed above, for propiconazole there does not appear to be an extra sensitivity for pre- or post-natal effects.

EPA notes developmental toxicity NOELs of 30 mg/kg/day in rats and 400 mg/kg/day (HDT) in rabbits. Developmental toxicity was observed in rats at 90 mg/kg/day; these effects occurred in the presence of maternal toxicity. The significant developmental effects in the rat study required an acute dietary risk assessment for females 13+ years of age. The calculated MOE of 3,000 demonstrated that the developmental risks were below HED's level of concern. In rabbits, no developmental delays or alterations were noted; however, increased abortions were observed at the maternally toxic dose of 400 mg/kg/day. The developmental NOELs are more than 24- and 320-fold higher in rats and rabbits, respectively, than the NOEL of 1.25 mg/kg/day from the 1-year feeding study in dogs, which is the basis of the RfD.

e. *Conclusion*. EPA concludes that reliable data support use of the standard hundredfold uncertainty factor and that an additional uncertainty factor is not needed to protect the safety of infants and children.

2. *Acute risk*. The calculated acute dietary (food only) MOE for females 13+ years old (accounts for both maternal and fetal exposure) is 3,000. This MOE calculation was based on the developmental NOEL in rats of 30 mg/kg/day. This risk assessment assumed 100% crop treated and tolerance level residues on all treated crops consumed, resulting in a significant over-estimate of dietary exposure. The Agency does not expect any significant exposure from the residential use of propiconazole. Despite the potential for exposure to propiconazole in drinking water, EPA does not expect the acute aggregate exposure to exceed our level of concern. The large acute dietary MOE calculated for females 13+ years old provides assurance that there is a reasonable certainty of no harm for both females 13+ years and the pre-natal development of infants.

3. *Chronic risk*. Using the conservative exposure assumptions described above, EPA has concluded that aggregate exposure to propiconazole from food will utilize 20% of the RfD for non-nursing infants less than 1 year old and 13% of the RfD for children 1 through 6 years old. EPA generally has no concern for exposures below 100% of the RfD because the RfD represents the level at or below which daily aggregate dietary exposure over a lifetime will not pose appreciable risks to human health. Despite the potential for exposure to propiconazole in drinking water and from non-dietary, non-occupational exposure, EPA does not expect the aggregate exposure to exceed 100% of the RfD. EPA concludes that there is a reasonable certainty that no harm will result to infants and children from aggregate exposure to propiconazole residues.

V. Other Considerations

A. Metabolism In Plants and Animals

The nature of the residue in plants and animals is adequately understood. The residues of concern are propiconazole (1-[[2-(2,4-dichlorophenyl)-4-propyl-1,3-dioxolan-2-yl]methyl]-1*H*-1,2,4-triazole), and its metabolites determined as 2,4-

dichlorobenzoic acid (DCBA) and expressed as parent compound as specified in 40 CFR 180.434 .

B. Analytical Enforcement Methodology

Adequate enforcement methodology is available to enforce the tolerance expression. Analytical methodologies for the determination of propiconazole and its metabolites in plant and animal commodities (Ciba-Geigy Analytical Methods AG-454 and AG-517, respectively) have been successfully validated by the Agency's Analytical Chemistry Laboratory and have been approved for publication in PAM II for enforcement purposes. These methods have not as of this time appeared in PAM II, but a copy of the methods may be obtained from the Information Resources and Services Division of OPP, at the address provided above.

C. Magnitude of Residues

Residues of propiconazole are not expected to exceed 0.2 ppm in grain sorghum, grain or 1.5 ppm in grain sorghum, stover as a result of the proposed section 18 use. Residues are not expected to exceed 20 ppm on sorghum aspirated grain fractions based on the expected tolerance level for grain sorghum grain, 0.2 ppm, and the maximum concentration factor, of 100x, for sorghum aspirated grain fractions.

D. International Residue Limits

There are no CODEX, Canadian, or Mexican maximum residue limits for propiconazole on sorghum; therefore, international harmonization is not an issue for this action.

E. Rotational Crop Restrictions

Do not rotate to any crop intended for food, grazing, or any component of animal feed or bedding within 105 days of product application, unless the crop appears on the product label.

VI. Conclusion

Therefore, tolerances are established for combined residues of propiconazole, 1-[[2-(2,4-dichlorophenyl)-4-propyl-1,3-dioxolan-2-yl]methyl]-1*H*-1,2,4-triazole, and its metabolites determined as 2,4-dichlorobenzoic acid (DCBA) in grain sorghum, grain at 0.2 ppm; grain sorghum, stover at 1.5 ppm; and sorghum aspirated grain fractions at 20 ppm.

VII. Objections and Hearing Requests

The new FFDCA section 408(g) provides essentially the same process for persons to ''object'' to a tolerance regulation issued by EPA under new section 408(e) and (l)(6) as was provided in the old section 408 and in section 409. However, the period for filing objections is 60 days, rather than 30 days. EPA currently has procedural regulations which govern the submission of objections and hearing requests. These regulations will require some modification to reflect the new law. However, until those modifications can be made, EPA will continue to use those procedural regulations with appropriate adjustments to reflect the new law.

Any person may, by October 14, 1997, file written objections to any aspect of this regulation and may also request a hearing on those objections. Objections and hearing requests must be filed with the Hearing Clerk, at the address given above (40 CFR 178.20). A copy of the objections and/or hearing requests filed with the Hearing Clerk should be submitted to the OPP docket for this rulemaking. The objections submitted must specify the provisions of the regulation deemed objectionable and the grounds for the objections (40 CFR 178.25). Each objection must be accompanied by the fee prescribed by 40 CFR 180.33(i). If a hearing is requested, the objections must include a statement of the factual issues on which a hearing is requested, the requestor's contentions on such issues, and a summary of any evidence relied upon by the requestor (40 CFR 178.27). A request for a hearing will be granted if the Administrator determines that the material submitted shows the following: There is genuine and substantial issue of fact; there is a reasonable possibility that available evidence identified by the requestor would, if established, resolve one or more of such issues in favor of the requestor, taking into account uncontested claims or facts to the contrary; and resolution of the factual issues in the manner sought by the requestor would be adequate to justify the action requested (40 CFR 178.32). Information submitted in connection with an objection or hearing request may be claimed confidential by marking any part or all of that information as Confidential Business Information (CBI). Information so marked will not be disclosed except in accordance with procedures set forth in 40 CFR part 2. A copy of the information that does not contain CBI must be submitted for inclusion in the public record. Information not marked confidential may be disclosed publicly by EPA without prior notice.

VIII. Public Docket

EPA has established a record for this rulemaking under docket control number [OPP–300525] (including any comments and data submitted electronically). A public version of this record, including printed, paper versions of electronic comments, which does not include any information claimed as CBI, is available for inspection from 8:30 a.m. to 4 p.m., Monday through Friday, excluding legal holidays. The public record is located in Room 1132 of the Public Information and Records Integrity Branch, Information Resources and Services Division (7506C), Office of Pesticide Programs, Environmental Protection Agency, Crystal Mall #2, 1921 Jefferson Davis Highway, Arlington, VA.

Electronic comments may be sent directly to EPA at:

opp-docket@epamail.epa.gov.

Electronic comments must be submitted as an ASCII file avoiding the use of special characters and any form of encryption.

The official record for this rulemaking, as well as the public version, as described above will be kept in paper form. Accordingly, EPA will transfer any copies of objections and hearing requests received electronically into printed, paper form as they are received and will place the paper copies in the official rulemaking record which will also include all comments submitted directly in writing. The official rulemaking record is the paper record maintained at the Virginia address in ''ADDRESSES'' at the beginning of this document.

IX. Regulatory Assessment Requirements

This final rule establishes tolerances under FFDCA section 408(d). The Office of Management and Budget (OMB) has exempted these types of actions from review under Executive Order 12866, entitled Regulatory Planning and Review (58 FR 51735, October 4, 1993). This final rule does not contain any information collections subject to OMB approval under the Paperwork Reduction Act (PRA), 44 U.S.C. 3501 *et seq.*, or impose any enforceable duty or contain any unfunded mandate as described under Title II of the Unfunded Mandates Reform Act of 1995 (UMRA) (Pub. L. 104–4). Nor does it require any prior consultation as specified by Executive Order 12875, entitled Enhancing the Intergovernmental Partnership (58 FR 58093, October 28, 1993), or special considerations as required by Executive Order 12898, entitled Federal Actions to Address Environmental Justice in Minority Populations and Low-Income Populations (59 FR 7629, February 16, 1994), or require OMB review in accordance with Executive Order 13045,

entitled Protection of Children from Environmental Health Risks and Safety Risks (62 FR 19885, April 23, 1997).

In addition, since these tolerances and exemptions that are established under FFDCA section 408 (d), such as the tolerances in this final rule, do not require the issuance of a proposed rule, the requirements of the Regulatory Flexibility Act (RFA) (5 U.S.C. 601 *et seq.*) do not apply. Nevertheless, the Agency has previously assessed whether establishing tolerances, exemptions from tolerances, raising tolerance levels or expanding exemptions might adversely impact small entities and concluded, as a generic matter, that there is no adverse economic impact. The factual basis for the Agency's generic certification for tolerance actions published on May 4, 1981 (46 FR 24950), and was provided to the Chief Counsel for Advocacy of the Small Business Administration.

X. Submission to Congress and the General Accounting Office

Under 5 U.S.C. 801(a)(1)(A), as added by the Small Business Regulatory Enforcement Fairness Act of 1996, the Agency has submitted a report containing this rule and other required information to the U.S. Senate, the U.S. House of Representatives, and the Comptroller General of the General Accounting Office prior to publication of this rule in today's **Federal Register**. This is not a ''major rule'' as defined by 5 U.S.C. 804(2).

List of Subjects in 40 CFR Part 180

Environmental protection, Administrative practice and procedure, Agricultural commodities, Pesticides and pests, Reporting and recordkeeping requirements.

Dated: August 5, 1997.

Peter Caulkins,

Acting Director, Registration Divison, Office of Pesticide Programs.

Therefore, 40 CFR Chapter I is amended as follows:

PART 180—[AMENDED]

1. The authority citation for part 180 continues to read as follows:

Authority: 21 U.S.C. 346a and 371.

2. In § 180.434, in the table to paragraph (b), by removing the entries for ''grain sorghum,'' and ''grain sorghum stover,'' and by adding entries for ''sorghum, aspirated grain fractions,'' ''sorghum, grain, grain,'' and ''sorghum, grain, stover,'' to read as follows:

§ 180.434 1-[[2-(2,4-dichlorophenyl)-4-propyl-1,3-dioxolan-2-yl]methyl]-1H-1,2,4-triazole; tolerances for residues.

* * * * *

(b) * * *

Commodity	Parts per million	Expiration/Revocation Date
* *	* * *	
Sorghum, aspirated grain fractions	20	July 31, 1998
Sorghum, grain, grain	0.2	July 31, 1998
Sorghum, grain, stover	1.5	July 31, 1998

* * * * *

[FR Doc. 97–21145 Filed 8–12–97; 8:45 am]

BILLING CODE 6560–50–F

FEDERAL EMERGENCY MANAGEMENT AGENCY

44 CFR Part 64

[Docket No. FEMA–7670]

Suspension of Community Eligibility

AGENCY: Federal Emergency Management Agency, FEMA.

ACTION: Final rule.

SUMMARY: This rule identifies communities, where the sale of flood insurance has been authorized under the National Flood Insurance Program (NFIP), that are suspended on the effective dates listed within this rule because of noncompliance with the floodplain management requirements of the program. If the Federal Emergency Management Agency (FEMA) receives documentation that the community has adopted the required floodplain management measures prior to the effective suspension date given in this rule, the suspension will be withdrawn by publication in the **Federal Register**.

EFFECTIVE DATES: The effective date of each community's suspension is the third date (''Susp.'') listed in the third column of the following tables.

ADDRESSES: If you wish to determine whether a particular community was suspended on the suspension date, contact the appropriate FEMA Regional Office or the NFIP servicing contractor.

FOR FURTHER INFORMATION CONTACT: Robert F. Shea Jr., Division Director, Program Implementation Division, Mitigation Directorate, 500 C Street, SW., Room 417, Washington, DC 20472, (202) 646–3619.

SUPPLEMENTARY INFORMATION: The NFIP enables property owners to purchase flood insurance which is generally not otherwise available. In return, communities agree to adopt and administer local floodplain management aimed at protecting lives and new construction from future flooding. Section 1315 of the National Flood Insurance Act of 1968, as amended, 42 U.S.C. 4022, prohibits flood insurance coverage as authorized under the National Flood Insurance Program, 42 U.S.C. 4001 *et seq.*, unless an appropriate public body adopts adequate floodplain management measures with effective enforcement measures. The communities listed in this document no longer meet that statutory requirement for compliance with program regulations, 44 CFR part 59 *et seq.* Accordingly, the communities will be suspended on the effective date in the third column. As of that date, flood insurance will no longer be available in the community. However, some of these communities may adopt and submit the required documentation of legally enforceable floodplain management measures after this rule is published but prior to the actual suspension date. These communities will not be suspended and will continue their eligibility for the sale of insurance. A notice withdrawing the suspension of the communities will be published in the **Federal Register**.

In addition, the Federal Emergency Management Agency has identified the special flood hazard areas in these communities by publishing a Flood Insurance Rate Map (FIRM). The date of the FIRM if one has been published, is indicated in the fourth column of the table. No direct Federal financial

assistance (except assistance pursuant to the Robert T. Stafford Disaster Relief and Emergency Assistance Act not in connection with a flood) may legally be provided for construction or acquisition of buildings in the identified special flood hazard area of communities not participating in the NFIP and identified for more than a year, on the Federal Emergency Management Agency's initial flood insurance map of the community as having flood-prone areas (section 202(a) of the Flood Disaster Protection Act of 1973, 42 U.S.C. 4106(a), as amended). This prohibition against certain types of Federal assistance becomes effective for the communities listed on the date shown in the last column. The Associate Director finds that notice and public comment under 5 U.S.C. 553(b) are impracticable and unnecessary because communities listed in this final rule have been adequately notified.

Each community receives a 6-month, 90-day, and 30-day notification addressed to the Chief Executive Officer that the community will be suspended unless the required floodplain management measures are met prior to the effective suspension date. Since these notifications have been made, this final rule may take effect within less than 30 days.

National Environmental Policy Act

This rule is categorically excluded from the requirements of 44 CFR part 10, Environmental Considerations. No environmental impact assessment has been prepared.

Regulatory Flexibility Act

The Associate Director has determined that this rule is exempt from the requirements of the Regulatory Flexibility Act because the National Flood Insurance Act of 1968, as amended, 42 U.S.C. 4022, prohibits flood insurance coverage unless an appropriate public body adopts adequate floodplain management measures with effective enforcement measures. The communities listed no longer comply with the statutory requirements, and after the effective date, flood insurance will no longer be available in the communities unless they take remedial action.

Regulatory Classification

This final rule is not a significant regulatory action under the criteria of section 3(f) of Executive Order 12866 of September 30, 1993, Regulatory Planning and Review, 58 FR 51735.

Paperwork Reduction Act

This rule does not involve any collection of information for purposes of the Paperwork Reduction Act, 44 U.S.C. 3501 *et seq.*

Executive Order 12612, Federalism

This rule involves no policies that have federalism implications under Executive Order 12612, Federalism, October 26, 1987, 3 CFR, 1987 Comp., p. 252.

Executive Order 12778, Civil Justice Reform

This rule meets the applicable standards of section 2(b)(2) of Executive Order 12778, October 25, 1991, 56 FR 55195, 3 CFR, 1991 Comp., p. 309.

List of Subjects in 44 CFR Part 64

Flood insurance, Floodplains.

Accordingly, 44 CFR part 64 is amended as follows:

PART 64—[AMENDED]

1. The authority citation for Part 64 continues to read as follows:

Authority: 42 U.S.C. 4001 *et seq.*; Reorganization Plan No. 3 of 1978, 3 CFR, 1978 Comp., p. 329; E.O. 12127, 44 FR 19367, 3 CFR, 1979 Comp., p. 376.

§ 64.6 [Amended]

2. The tables published under the authority of § 64.6 are amended as follows:

State/location	Community No.	Effective date of eligibility	Current effective map date	Date certain Federal assistance no longer available in special flood hazard areas
Region II				
New York:				
Mount Kisco, village of, Westchester County.	360918	Mar. 8, 1976, Emerg; Sept. 18, 1986, Reg; Aug. 5, 1997, Susp.	Aug. 5, 1997	Aug. 5, 1997.
New Castle, town of, Westchester County.	360921	May 30, 1974, Emerg; Sept. 5, 1979, Reg; Aug. 5, 1997, Susp.	.....do	Do.
Region III				
Pennsylvania:				
Bolivar, borough of, Westmoreland County.	420873	Aug. 13, 1976, Emerg; Aug. 10, 1979, Reg; Aug. 5, 1997, Susp.	.....do	Do.
Cook, township of, Westmoreland County.	422186	May 28, 1982, Emerg; Apr. 17, 1985, Reg; Aug. 5, 1997, Susp.	.....do	Do.
Hunker, borough of, Westmoreland County.	420880	Nov. 14, 1975, Emerg; Nov. 19, 1986, Reg; Aug. 5, 1997, Susp.	.....do	Do.
Manor, borough of, Westmoreland County.	420886	Aug. 29, 1973, Emerg; Sept. 1, 1977, Reg; Aug. 5, 1997, Susp.	.....do	Do.
Murrysville, municipality of, Westmoreland County.	421207	May 23, 1974, Emerg; Feb. 17, 1982, Reg; Aug. 5, 1997, Susp.	.....do	Do.
North Belle Vernon, borough of, Westmoreland County.	422182	Mar. 7, 1978, Emerg; Sept. 30, 1980, Reg; Aug. 5, 1980, Susp.	.....do	Do.
South Greensburg, borough of, Westmoreland County.	420900	Feb. 10, 1976, Emerg; July 3, 1986, Reg; Aug. 5, 1997, Susp.	.....do	Do.
Unity, township of, Westmoreland County.	420964	Dec. 26, 1973, Emerg; July 17, 1978, Reg; Aug. 5, 1997, Susp.	.....do	Do.
Youngstown, borough of, Westmoreland County.	420907	July 7, 1975, Emerg; Apr. 20, 1979, Reg; Aug. 5, 1997, Susp.	.....do	Do.
Region I				
Maine:				

State/location	Community No.	Effective date of eligibility	Current effective map date	Date certain Federal assistance no longer available in special flood hazard areas
Cutler, town of, Washington County	230310	May 2, 1975, Emerg; Aug. 5, 1985, Reg; Aug. 19, 1997, Susp.	Aug. 19, 1997 ...	Aug. 19, 1997.
Perry, town of, Washington County	230319	July 30, 1975, Emerg; Sept. 4, 1985, Reg; Aug. 19, 1997, Susp.	.....do	Do.
New Hampshire: Tilton, town of, Belknap County.	330009	July 25, 1975, Emerg; May 1, 1979, Reg; Aug. 19, 1997, Susp.	.....do	Do.
Region III				
Pennsylvania:				
Benton, borough of, Columbia County ...	421543	June 10, 1975, Emerg; Oct. 18, 1983, Reg; Aug. 19, 1997, Susp.	.....do	Do.
West Brunswick, township of, Schuylkill County.	422028	Aug. 1, 1979, Emerg; July 17, 1989, Reg; Aug. 19, 1997, Susp.	.....do	Do.
Virginia:				
Buchanan County, unincorporated areas	510024	Nov. 8, 1974, Emerg; Sept. 16, 1988, Reg; Aug. 19, 1997, Susp.	.....do	Do.
Grundy, town of, Buchanan County	510025	Nov. 8, 1974, Emerg; Aug. 16, 1982, Reg; Aug. 19, 1997, Susp.	.....do	Do.
Region IV				
Georgia: Talbot County, unincorporated areas.	130396	May 30, 1979, Emerg; Sept. 4, 1986, Reg; Aug. 19, 1997, Susp.	.....do	Do.
Region V				
Illinois: Wood Dale, city of, DuPage County ..	170224	Feb. 2, 1973, Emerg; Sept. 30, 1977, Reg; Aug. 19, 1997, Susp.	.....do	Do.
Michigan: Meyer, township of, Menominee County.	260458	Sept. 22, 1995, Emerg; Aug. 19, 1997, Reg; Aug. 19, 1997, Susp.	.....do	Do.
Region IX				
Arizona: Santa Cruz County, unincorporated areas.	040090	Apr. 23, 1971, Emerg; Aug. 1, 1980, Reg; Aug. 19, 1997, Susp.	.....do	Do.
California: Hemet, city of, Riverside County ..	060253	Nov. 2, 1974, Emerg; Sept. 29, 1978, Reg; Aug. 19, 1997, Susp.	.....do	Do.

Code for reading third column: Emerg.—Emergency; Reg.—Regular; Rein.—Reinstatement; Susp.—Suspension.

(Catalog of Federal Domestic Assistance No. 83.100, ''Flood Insurance.'')

Issued: August 5, 1997.

Michael J. Armstrong,

Associate Director for Mitigation.

[FR Doc. 97–21384 Filed 8–12–97; 8:45 am]

BILLING CODE 6718–05–P

FEDERAL COMMUNICATIONS COMMISSION

47 CFR Part 73

[MM Docket No. 97–103; RM–9030]

Radio Broadcasting Services; Shawsville, VA

AGENCY: Federal Communications Commission.

ACTION: Final rule.

SUMMARY: The Commission, at the request of Grace Communications L.C., allots Channel 273A to Shawsville, Virginia, as the community's first local aural transmission service. *See* 62 FR 15870, April 3, 1997. Channel 273A can be allotted to Shawsville in compliance with the Commission's minimum distance separation requirements with a site restriction of 2.3 kilometers (1.4 miles) west in order to avoid a short-spacing conflict with the vacant allotment of Channel 274C1, Appomattox, Virginia. The coordinates for Channel 273A at Shawsville are 37–09–47 NL and 80–16–48 WL. With this action, this proceeding is terminated.

DATES: Effective September 22, 1997. The window period for filing applications for Channel 273A at Shawsville will open on September 22, 1997, and close on October 23, 1997.

FOR FURTHER INFORMATION CONTACT: Pam Blumenthal, Mass Media Bureau, (202) 418–2180.

SUPPLEMENTARY INFORMATION: This is a synopsis of the Commission's Report and Order, MM Docket No. 97–103, adopted July 30, 1997, and released August 8, 1997. The full text of this Commission decision is available for inspection and copying during normal business hours in the FCC Reference Center (Room 239), 1919 M Street, NW., Washington, DC. The complete text of this decision may also be purchased from the Commission's copy contractor, ITS, Inc., (202) 857–3800, 1231 20th Street, NW., Washington, DC 20036.

List of Subjects in 47 CFR Part 73

Radio broadcasting.

Part 73 of title 47 of the Code of Federal Regulations is amended as follows:

PART 73—[AMENDED]

1. The authority citation for Part 73 continues to read as follows:

Authority: Secs. 303, 48 Stat., as amended, 1082; 47 U.S.C. 154, as amended.

§ 73.202 [Amended]

2. Section 73.202(b), the Table of FM Allotments under Virginia, is amended by adding Shawsville, Channel 273A.

Federal Communications Commissions.

John A. Karousos,

Chief, Allocations Branch, Policy and Rules Division, Mass Media Bureau.

[FR Doc. 97–21377 Filed 8–12–97; 8:45 am]

BILLING CODE 6712–01–P

FEDERAL COMMUNICATIONS COMMISSION

47 CFR Part 73

[MM Docket No. 97–110; RM–9045]

Radio Broadcasting Services; Mansura, LA

AGENCY: Federal Communications Commission.

ACTION: Final rule.

SUMMARY: The Commission, at the request of Mark A. Zweig, allots Channel 240A to Mansura, Louisiana, as the community's first local aural transmission service. *See* 62 FR 17772, April 11, 1997. Channel 240A can be allotted to Mansura in compliance with the Commission's minimum distance separation requirements without the imposition of a site restriction. The coordinates for Channel 240A at Mansura are 31–03–36 NL and 92–03–00 WL. With this action, this proceeding is terminated.

DATES: Effective September 22, 1997. The window period for filing applications for Channel 240A at Mansura will open on September 22, 1997, and close on October 23, 1997.

FOR FURTHER INFORMATION CONTACT: Pam Blumenthal, Mass Media Bureau, (202) 418–2180.

SUPPLEMENTARY INFORMATION: This is a synopsis of the Commission's Report and Order, MM Docket No. 97–110, adopted July 30, 1997, and released August 8, 1997. The full text of this Commission decision is available for inspection and copying during normal business hours in the FCC Reference Center (Room 239), 1919 M Street, NW., Washington, DC. The complete text of this decision may also be purchased from the Commission's copy contractor, ITS, Inc., (202) 857–3800, 1231 20th Street, NW., Washington, DC 20036.

List of Subjects in 47 CFR Part 73

Radio broadcasting.

Part 73 of title 47 of the Code of Federal Regulations is amended as follows:

PART 73—[AMENDED]

1. The authority citation for part 73 continues to read as follows:

Authority: Secs. 303, 48 Stat., as amended, 1082; 47 U.S.C. 154, as amended.

§ 73.202 [Amended]

2. Section 73.202(b), the Table of FM Allotments under Louisiana, is amended by adding Mansura, Channel 240A.

Federal Communications Commission.

John A. Karousos,

Chief, Allocations Branch, Policy and Rules Division, Mass Media Bureau.

[FR Doc. 97–21374 Filed 8–12–97; 8:45 am]

BILLING CODE 6712–01–P

DEPARTMENT OF COMMERCE

National Oceanic and Atmospheric Administration

50 CFR Part 660

[I.D. 061897A]

RIN 0648–AJ57

Fisheries Off West Coast States and in the Western Pacific; Western Pacific Crustacean Fisheries; Vessel Monitoring System; Correction

AGENCY: National Marine Fisheries Service (NMFS), National Oceanic and Atmospheric Administration (NOAA), Commerce.

ACTION: Final rule; correction.

SUMMARY: This action corrects a rule published in the **Federal Register** of July 1, 1997. The regulations implemented a voluntary vessel monitoring system for the Western Pacific Crustacean Fisheries.

DATES: Effective August 13, 1997.

FOR FURTHER INFORMATION CONTACT: William D. Chappell at 301–713–2341.

SUPPLEMENTARY INFORMATION: On July 1, 1997, when NMFS added the definition for Crustaceans Permit Area 1 VMS Subarea to § 660.12, NMFS inadvertently misspelled the name of Nihoa Island in the second sentence.

Correction of Publication

The publication on July 1, 1997 (62 FR 35448) [I.D. 061897A], FR Doc. 97–17153, is corrected as follows:

§ 660.12 [Corrected]

On page 35449, in § 660.12, in the definition of *Crustaceans Permit Area 1 VMS Subarea*, in the third column, on the second line, the word ''Nohow'' is corrected to read ''Nihoa''.

Authority: 16 U.S.C. 1801 *et seq.*

Dated: August 7, 1997.

Rolland A Schmitten,

Assistant Administrator for Fisheries, National Marine Fisheries Service.

[FR Doc. 97–21339 Filed 8–12–97; 8:45 am]

BILLING CODE 3510–22–F

Proposed Rules

Federal Register
Vol. 62, No. 156
Wednesday, August 13, 1997

This section of the FEDERAL REGISTER contains notices to the public of the proposed issuance of rules and regulations. The purpose of these notices is to give interested persons an opportunity to participate in the rule making prior to the adoption of the final rules.

RAILROAD RETIREMENT BOARD

20 CFR Part 200

RIN 3220–AB31

General Administration; Disclosure

AGENCY: Railroad Retirement Board.

ACTION: Proposed rule.

SUMMARY: The Railroad Retirement Board (Board) hereby proposes to amend its regulations to permit disclosure of pertinent information to a consular official acting on behalf of a compatriot who has claimed benefits under the Railroad Retirement Act or Railroad Unemployment Insurance Act.

DATES: Comments should be submitted on or before October 14, 1997.

ADDRESSES: Secretary to the Board, Railroad Retirement Board, 844 North Rush Street, Chicago, Illinois 60611.

FOR FURTHER INFORMATION CONTACT: Michael C. Litt, General Attorney, Railroad Retirement Board, 844 North Rush Street, Chicago, Illinois 60611, (312) 751–4929, TDD (312) 751–4701, TDD (FTS (312) 386–4701).

SUPPLEMENTARY INFORMATION: Section 200.8(g) of the regulations of the Board provides for disclosure of information obtained by the Board in the administration of the Railroad Retirement and Railroad Unemployment Insurance Acts. This rulemaking would amend § 200.8(g) to permit disclosure of information to a consular official acting on behalf of a compatriot who has claimed benefits under the Railroad Retirement Act, or Railroad Unemployment Insurance Act. Only information pertinent to his or her claim may be disclosed.

The Board, with the concurrence of the Office of Management and Budget, has determined that this is not a major rule for purposes of Executive Order 12866. Therefore, no regulatory analysis is required. There are no information collections associated with this rule.

List of Subjects in 20 CFR Part 200

Railroad employees.

For the reasons set out in the preamble, title 20, chapter II, Part 200 of the Code of Federal Regulations is amended as follows:

PART 200—GENERAL ADMINISTRATION

1. The authority citation for part 200 continues to read as follows:

Authority: 45 U.S.C. 231f(b)(5) and 45 U.S.C. 362; § 200.4 also issued under 5 U.S.C. 552; § 200.5 also issued under 5 U.S.C. 552a; § 200.6 also issued under 5 U.S.C. 552b; and § 200.7 also issued under 31 U.S.C. 3717.

2. Section 200.8 is amended by adding new paragraph (g)(12) to read as follows:

§ 200.8 Disclosure of information obtained in the administration of the Railroad Retirement Act and the Railroad Unemployment Insurance Act.

* * * * *

(g) Authorized release of information.

* * *

(12) To any consular official, other than a consular officer of a country to which United States Treasury checks and warrants may not be sent, acting in behalf of a compatriot who has claimed benefits under the Railroad Retirement Act or Railroad Unemployment Insurance Act, information that is pertinent to the claim and that the applicant himself could have upon his or her own request.

* * * * *

Dated: August 5, 1997.

By authority of the Board.

For The Board,

Beatrice Ezerski,

Secretary to the Board.

[FR Doc. 97–21402 Filed 8–12–97; 8:45 am]

BILLING CODE 7905–01–P

DEPARTMENT OF THE TREASURY

Internal Revenue Service

26 CFR Part 1

[REG–105160–97]

RIN 1545–AV17

Qualified Nonrecourse Financing Under Section 465(b)(6)

AGENCY: Internal Revenue Service (IRS), Treasury.

ACTION: Notice of proposed rulemaking and notice of public hearing.

SUMMARY: This document contains proposed regulations under section 465(b)(6) regarding qualified nonrecourse financing. The proposed regulations address whether the personal liability of an entity prevents financing from being treated as qualified nonrecourse financing and whether qualified nonrecourse financing may be secured by property that is incidental to the activity of holding real property. The proposed regulations would affect partnerships and their partners. This document also gives notice of a public hearing scheduled for December 10, 1997.

DATES: Written comments and requests to speak (with outlines of oral comments) at the public hearing scheduled for December 10, 1997, must be received by November 19, 1997.

ADDRESSES: Send submissions to: CC:DOM:CORP:R (REG–105160–97), room 5228, Internal Revenue Service, POB 7604, Ben Franklin Station, Washington, DC 20044. In the alternative, submissions may be hand delivered between the hours of 8 a.m. and 5 p.m. to: CC:DOM:CORP:R (REG–105160–97), Courier's Desk, Internal Revenue Service, 1111 Constitution Avenue NW., Washington, DC.

Alternatively, taxpayers may submit comments electronically via the Internet by selecting the ''Tax Regs'' option of the IRS Home Page, or by submitting comments directly to the IRS Internet site at: http://www.irs.ustreas.gov/prod/tax_regs/comments.html. The public hearing will be held in room 2615, Internal Revenue Building, 1111 Constitution Avenue, NW., Washington, DC.

FOR FURTHER INFORMATION CONTACT: Concerning the regulations, Jeffrey A. Erickson, (202) 622–3070; concerning submissions and the hearing, Michael Slaughter, (202) 622–7190 (not toll-free numbers).

SUPPLEMENTARY INFORMATION:

Introduction

This document contains proposed regulations under section 465(b)(6) of the Internal Revenue Code (Code). Section 465, which applies to individuals and certain corporations, limits a taxpayer's loss deduction for an activity to the amount of the taxpayer's amount at risk in the activity at the close of the taxable year. A taxpayer's amount at risk generally includes the

amount of any cash and the adjusted tax basis of any property contributed by the taxpayer to the activity plus any amounts borrowed for use in the activity to the extent the taxpayer is personally liable for repayment.

For the activity of holding real property, a taxpayer may also include as an amount at risk the taxpayer's share of any ''qualified nonrecourse financing'' that is secured by real property used in the activity of holding real property, even though the taxpayer is not personally liable for repayment of the financing. Section 465(b)(6) defines qualified nonrecourse financing as any financing that (i) is borrowed by the taxpayer for the activity of holding real property; (ii) is borrowed by the taxpayer from a qualified person or represents a loan from any federal, state, or local government or instrumentality thereof, or is guaranteed by any federal, state, or local government; (iii) except to the extent provided in regulations, no person is personally liable for repayment; and (iv) is not convertible debt.

Explanation of Provisions

I. Secured by Real Property

Section 465(b)(6)(A) provides that qualified nonrecourse financing must be secured by real property used in the activity of holding real property. The legislative history of section 465(b)(6) suggests that qualified nonrecourse financing can be secured only by real property. H.R. Rep. No. 426, 99th Cong., 1st Sess. 293 (1985), 1986–3 (Vol. 2) C.B. 293; S. Rep. No. 313, 99th Cong., 2d Sess. 748 (1986), 1986–3 (Vol. 3) C.B. 748. Section 465(b)(6)(E), however, provides that the activity of holding real property includes the holding of personal property that is incidental to making real property available as living accommodations. Section 465(b)(6) does not specifically provide that such incidental property may be used to secure qualified nonrecourse financing. The proposed regulations provide that financing can qualify as qualified nonrecourse financing if, in addition to the real property used in the activity of holding real property, the financing is secured by both real property and other property that is incidental to the activity of holding real property.

II. Personal Liability

Section 465(b)(6)(B)(iii) provides that, except to the extent provided in regulations, no person may be personally liable for repayment of qualified nonrecourse financing. The legislative history of section 465 states that regulations may provide rules under which the guaranty, indemnity, or personal liability of a person other than the taxpayer does not cause the financing to be treated as other than qualified nonrecourse financing. H.R. Rep. No. 426, 99th Cong., 1st Sess. 294 (1985), 1986–3 (Vol. 2) C.B. 294; S. Rep. No. 313, 99th Cong., 2d Sess. 749 (1986), 1986–3 (Vol. 3) C.B. 749.

A partnership is treated as a person under the Code. Thus, any financing for which a partnership is personally liable is not qualified nonrecourse financing under section 465(b)(6)(B)(iii), even if no partner is personally liable for the financing. This result is inappropriate if the only activity of the partnership is the real property activity; the personal liability of the partnership in that situation is not meaningful and the financing is the equivalent of nonrecourse financing. Situations in which a partnership is liable for repayment, but no partner is personally liable, may be unusual for general and limited partnerships; however, such situations may become increasingly common with the use of limited liability companies (LLCs) in which the LLC is personally liable for its debts and the members of the LLC are not liable. In response, the proposed regulations provide that the personal liability of a partnership (including an LLC that is treated as a partnership) is disregarded in determining whether a financing is qualified nonrecourse financing if the entity's only assets are real property used in the activity of holding real property or both real property and other property that is incidental to the activity of holding real property, and no other person is liable for the financing.

In addition, section 465(b)(6) does not specifically provide that financing may qualify as qualified nonrecourse financing if a person is personally liable for a portion of the financing. Treating the portion of the financing for which no person is personally liable as qualified nonrecourse financing would not be inconsistent with the underlying policy of section 465. Therefore, the proposed regulations provide that the portion for which no person is personally liable can qualify as qualified nonrecourse financing.

Proposed Effective Date

These regulations are proposed to be effective for financing incurred on or after the date final regulations are published in the **Federal Register**.

Special Analyses

It has been determined that this notice of proposed rulemaking is not a significant regulatory action as defined in EO 12866. Therefore, a regulatory assessment is not required. It also has been determined that section 553(b) of the Administrative Procedure Act (5 U.S.C. chapter 5) does not apply to these regulations, and because these regulations do not impose on small entities a collection of information requirement, the Regulatory Flexibility Act (5 U.S.C. chapter 6) does not apply. Therefore, a Regulatory Flexibility Analysis is not required. Pursuant to section 7805(f) of the Internal Revenue Code, this notice of proposed rulemaking will be submitted to the Chief Counsel for Advocacy of the Small Business Administration for comment on its impact on small business.

Comments and Public Hearing

Before these proposed regulations are adopted as final regulations, consideration will be given to any written comments (preferably a signed original and eight (8) copies) that are submitted timely to the IRS. All comments will be available for public inspection and copying.

A public hearing has been scheduled for December 10, 1997, at 10 a.m., in room 2615, Internal Revenue Building, 1111 Constitution Avenue NW., Washington, DC. Because of access restrictions, visitors will not be admitted beyond the Internal Revenue Building lobby more than 15 minutes before the hearing starts.

The rules of 26 CFR 601.601(a)(3) apply to the hearing.

Persons that wish to present oral comments at the hearing must submit timely written comments (preferably a signed original and eight (8) copies) and an outline of the topics to be discussed and the time to be devoted to each topic by November 19, 1997.

A period of 10 minutes will be allotted to each person for making comments.

An agenda showing the scheduling of the speakers will be prepared after the deadline for receiving outlines has passed. Copies of the agenda will be available free of charge at the hearing.

Drafting Information

The principal author of these regulations is Jeffrey A. Erickson, Office of Chief Counsel (Passthroughs and Special Industries). However, other personnel from the IRS and Treasury Department participated in their development.

List of Subjects in 26 CFR Part 1

Income taxes, Reporting and recordkeeping requirements.

Proposed Amendments to the Regulations

Accordingly, 26 CFR Part 1 is proposed to be amended as follows:

PART 1—INCOME TAXES

Paragraph 1. The authority citation for part 1 is amended by adding an entry in numerical order to read as follows:

Authority: 26 U.S.C. 7805 * * *

§ 1.465–27(b)(3) also issued under 26 U.S.C. 465(b)(6)(B)(iii). * * *

Par. 2. Section 1.465–27 is added to read as follows:

§ 1.465–27 Qualified nonrecourse financing.

(a) *In general.* Notwithstanding any provision of section 465(b) or the regulations under section 465, in the case of an activity of holding real property, a taxpayer is considered at risk with respect to the taxpayer's share of any qualified nonrecourse financing that is secured by real property used in such activity.

(b) *Qualified nonrecourse financing*—(1) *In general.* For section 465(b)(6) and this section, the term qualified nonrecourse financing means any financing—

(i) Which is borrowed by the taxpayer with respect to the activity of holding real property;

(ii) Which is borrowed by the taxpayer from a qualified person or represents a loan from any federal, state, or local government or instrumentality thereof, or is guaranteed by any federal, state, or local government;

(iii) Except as otherwise provided in paragraph (b)(3)(ii) of this section, for which no person is personally liable for repayment; and

(iv) Which is not convertible debt.

(2) *Secured by incidental property.* A taxpayer will be considered at risk with respect to the taxpayer's share of any qualified nonrecourse financing secured by real property used in the activity of holding real property, where such financing is also secured by property that is incidental to the activity of holding such real property.

(3) *Personal liability*—(i) *Partial liability.* If a person is personally liable for repayment of a portion of a financing, the portion of the financing for which no person is personally liable can qualify as qualified nonrecourse financing.

(ii) *Partnership liability.* The personal liability of an entity classified as a partnership for repayment of a financing shall be disregarded in determining whether the financing is qualified nonrecourse financing, if the only assets of the partnership are either real property used in the activity of holding real property or both such real property and other property that is incidental to the activity of holding such real property, and no other person is liable for repayment of the financing.

(4) *Examples.* The following examples illustrate the rules of paragraph (b) of this section:

Example 1. Personal liability of partnership; Incidental property. X is a limited liability company that is classified as a partnership for federal tax purposes. X is engaged only in the activity of holding real property. In addition to real property used in the activity of holding real property, X owns office equipment, a truck, and maintenance equipment that it uses to support the activity of holding real property. X borrows $500 to use in the activity. X is personally liable on the financing, but no member of X and no other person is liable for repayment of the financing. Under paragraph (b)(3)(ii) of this section, the personal liability of X for repayment of the financing is disregarded when determining whether the financing is qualified nonrecourse financing. Under paragraph (b)(2) of this section, the personal property is treated as incidental personal property used in the activity of holding real property. Therefore, assuming the financing satisfies the other requirements for qualified nonrecourse financing, the financing will be treated as qualified nonrecourse financing.

Example 2. Bifurcation of financing. The facts are the same as in *Example 1,* except that A, a member of X, is personally liable for repayment of $100 of the financing. Under paragraph (b)(3)(i) of this section, the portion of the financing for which A is not personally liable for repayment ($400) can qualify as qualified nonrecourse financing.

(c) *Effective date.* This section is effective for financing incurred on or after the date the final regulations are published in the **Federal Register**.

Michael P. Dolan,

Acting Commissioner of Internal Revenue.

[FR Doc. 97–21418 Filed 8–12–97; 8:45 am]

BILLING CODE 4830–01–U

ENVIRONMENTAL PROTECTION AGENCY

40 CFR Part 721

[OPPTS–50627; FRL–5720–2]

RIN 2070–AB27

Significant New Uses of Certain Chemical Substances

AGENCY: Environmental Protection Agency (EPA).

ACTION: Proposed rule.

SUMMARY: EPA is proposing significant new use rules (SNURs) under section 5(a)(2) of the Toxic Substances Control Act (TSCA) for four chemical substances which are the subject of premanufacture notices (PMNs) P–95–1584, P–96–1674/1675, and P–97–267. This proposal would require certain persons who intend to manufacture, import, or process these substances for a significant new use to notify EPA at least 90 days before commencing any manufacturing, importing, or processing activities for a use designated by this SNUR as a significant new use. The required notice would provide EPA with the opportunity to evaluate the intended use, and if necessary, to prohibit or limit that activity before it can occur.

DATES: Written comments must be received by EPA by September 12, 1997.

ADDRESSES: Each comment must bear the docket control number OPPTS–50627 and the name(s) of the chemical substance(s) subject to the comment. All comments should be sent in triplicate to: OPPT Document Control Officer (7407), Office of Pollution Prevention and Toxics, Environmental Protection Agency, 401 M Street, SW., Room G–099, East Tower, Washington, DC 20460.

Comments and data may also be submitted electronically by following instructions under Unit IX of this document. No confidential business information (CBI) should be submitted through e-mail.

All comments which are claimed confidential must be clearly marked as such. Three additional sanitized copies of any comments containing CBI must also be submitted. Nonconfidential versions of comments on this rule will be placed in the rulemaking record and will be available for public inspection.

FOR FURTHER INFORMATION CONTACT: Susan Hazen, Director, Environmental Assistance Division (7408), Office of Toxic Substances, Environmental Protection Agency, Rm. E–543B, 401 M St., SW., Washington, DC 20460, telephone: (202) 554–1404, TDD: (202) 554–0551; e-mail: TSCA-Hotline@epamail.epa.gov.

SUPPLEMENTARY INFORMATION: This proposed SNUR would require persons to notify EPA at least 90 days before commencing the manufacture, import, or processing of P–95–1584, P–96–1674/1675, and P–97–267 for the significant new uses designated herein. The required notice would provide EPA with information with which to evaluate an intended use and associated activities.

I. Authority

Section 5(a)(2) of TSCA (15 U.S.C. 2604(a)(2)) authorizes EPA to determine that a use of a chemical substance is a

''significant new use.'' EPA must make this determination by rule after considering all relevant factors, including those listed in section 5(a)(2). Once EPA determines that a use of a chemical substance is a significant new use, section 5(a)(1)(B) of TSCA requires persons to submit a notice to EPA at least 90 days before they manufacture, import, or process the substance for that use. The mechanism for reporting under this requirement is established under 40 CFR 721.10.

II. Applicability of General Provisions

General provisions for SNURs appear under subpart A of 40 CFR part 721. These provisions describe persons subject to the rule, recordkeeping requirements, exemptions to reporting requirements, and applicability of the rule to uses occurring before the effective date of the final rule. Provisions relating to user fees appear at 40 CFR part 700. Persons subject to this SNUR must comply with the same notice requirements and EPA regulatory procedures as submitters of PMNs under section 5(a)(1)(A) of TSCA. In particular, these requirements include the information submission requirements of section 5(b) and 5(d)(1), the exemptions authorized by section 5 (h)(1), (h)(2), (h)(3), and (h)(5), and the regulations at 40 CFR part 720. Once EPA receives a SNUR notice, EPA may take regulatory action under section 5 (e), 5(f), 6, or 7 to control the activities on which it has received the SNUR notice. If EPA does not take action, EPA is required under section 5(g) to explain in the **Federal Register** its reasons for not taking action.

Persons who intend to export a substance identified in a proposed or final SNUR are subject to the export notification provisions of TSCA section 12(b). The regulations that interpret section 12(b) appear at 40 CFR part 707. Persons who intend to import a chemical substance identified in a final SNUR are subject to the TSCA section 13 import certification requirements, which are codified at 19 CFR 12.118 through 12.127 and 127.28. Such persons must certify that they are in compliance with SNUR requirements. The EPA policy in support of the import certification appears at 40 CFR part 707.

III. Substances Subject to This Rule

EPA is proposing significant new use and recordkeeping requirements for the following chemical substances under 40 CFR part 721, subpart E. In this unit, EPA provides a brief description for each substance, including its PMN number, chemical name (generic name if the specific name is claimed as CBI), CAS number (if assigned), basis for the action taken by EPA for the substance (including the statutory citation and specific finding), toxicity concern, recommended testing, and the CFR citation assigned in the regulatory text section of this rule. The specific uses which are designated as significant new uses are cited in the regulatory text section of this document by reference to 40 CFR part 721, subpart E where the significant new uses are described in detail. Certain new uses are claimed as CBI. The procedure for obtaining confidential information is set out in Unit VI of this preamble.

Data on potential exposures or releases of the substances, testing other than that specified in the section 5(e) order for the substances, or studies on analogous substances, which may demonstrate that the significant new uses being reported do not present an unreasonable risk, may be included with significant new use notification. Persons submitting a SNUN must comply with the same notice requirements and EPA regulatory procedures as submitters of PMNs, as stated in 40 CFR 721.1(c), including submission of test data on health and environmental effects as described in 40 CFR 720.50.

PMN Number P–95–1584

Chemical name: Organosolv lignin.
CAS number: 8068–03–9.
Basis for action: The PMN substance will have the following uses: (1) As a phenolic resin substitute for wood adhesives, rubber trackifer and brake pads; (2) an additive to enhance degradability of polymer blends; and (3) as a moisture barrier for paper lamination. Based on structural activity relationships derived from test data on structurally similar phenols and aldehydes, EPA expects toxicity to aquatic organisms to occur at a concentration of 10 parts per billion (ppb) PMN substance in surface waters. Use of the PMN substance could result in releases that significantly exceeded the concern level. However if the PMN substance is manufactured, processed or used with a number average molecular weight greater than or equal to 1000 daltons (an oligomer content less than 10 percent below molecular weight 500 and less than 25 percent below molecular weight 1000), EPA does not have environmental concerns for aquatic toxicity. EPA determined that uses of the substance as described in the PMN did not present an unreasonable risk to the environment because the submitter would manufacture, process, and use the PMN substance with a number average molecular weight greater than or equal to 1000 daltons (an oligomer content less than 10 percent below molecular weight 500 and less than 25 percent below molecular weight 1000). EPA has determined that uses of the substance in any other molecular weight form may result in toxicity to the aquatic environment. Based on this information the PMN substance meets the concern criteria at § 721.170(b)(3)(iii).
Recommended testing: EPA has determined that a fish acute toxicity study (40 CFR 797.1400), a daphnid acute toxicity study (40 CFR 797.1300), an algal acute toxicity study (40 CFR 797.1050), a ready biodegradability study (OPPTS 835.3110 test guideline (public draft)) and an anaerobic biodegradation study (OPPTS 835.3400 test guideline (public draft)) would help characterize the environmental effects of the PMN substance.
CFR citation: 40 CFR 721.5460.

PMN Numbers P–96–1674/1675

Chemical name: Alkyl amino nitriles.
CAS number: Not available.
Basis for action: The PMN substances will be used as intermediates. Based on submitted test data and test data for analogous substances, EPA is concerned that workers exposed via the ocular route may be at risk of death. There is also concern for acute oral and dermal toxicity. EPA determined that use of the substances as described in the PMN did not present an unreasonable risk because workers would not be subject to significant exposures. EPA has determined that use other than as an intermediate, in non-industrial uses, and use of the substances without appropriate protective equipment and adequate hazard communication may result in significant exposure to workers. Based on this information the PMN substances meet the concern critera at § 721.170(b)(3)(i) and (b)(3)(ii).
Recommended testing: EPA has determined that an acute dermal toxicity study in rabbits (OPPTS 870.1200 test guideline (public draft)) would help characterize the human health effects of the PMN substance.
CFR citation: 40 CFR 721.555.

PMN Number P–97–267

Chemical name: (generic) Substituted carbazate.
CAS number: Not available.
Basis for action: The PMN substance will be used in an enclosed process. Based on analogy to hydrazines there are concerns for liver toxicity, developmental toxicity, oncogenicity, and mutagenicity. Based on submitted toxicity data there are concerns for lethality via the oral, dermal, inhalation,

and eye routes and for neurotoxicity. EPA determined that use of the substance as described in the PMN did not present an unreasonable risk because workers would not be subject to significant exposures. EPA has determined that uses of the substance in a non-enclosed process, without appropriate hazard communication, and other than for the specific use designated in the PMN may result in significant exposures to workers. Based on this information the PMN substance meets the concern criteria at § 721.170 (b)(1)(i)(c), (b)(3)(i), and (b)(3)(ii).
Recommended testing: None.
CFR citation: 40 CFR 721.2077.

IV. Objectives and Rationale of the Rule

During review of the PMNs submitted for the chemical substances that are subject to this SNUR, EPA determined that one or more of the criteria of concern established at 40 CFR 721.170 were met. EPA is proposing this SNUR for specific chemical substances which have undergone premanufacture review to ensure that:

(1) EPA will receive notice of any company's intent to manufacture, import, or process a listed chemical substance for a significant new use before that activity begins.

(2) EPA will have an opportunity to review and evaluate data submitted in a SNUR notice before the notice submitter begins manufacturing, importing, or processing a listed chemical substance for a significant new use.

(3) When necessary to prevent unreasonable risks EPA will be able to regulate prospective manufacturers, importers, or processors of a listed chemical substance before a significant new use of that substance occurs. Issuance of a SNUR for a chemical substance does not signify that the substance is listed on the TSCA Inventory. Manufacturers, importers, and processors are responsible for ensuring that a new chemical substance subject to a final SNUR is listed on the TSCA Inventory.

V. Test Data and Other Information

EPA recognizes that section 5 of TSCA does not require developing any particular test data before submission of a SNUN. Persons are required only to submit test data in their possession or control and to describe any other data known to or reasonably ascertainable by them. Unit III of this preamble lists recommended tests (if any) that would address the potential risks of the substances.

The recommended studies may not be the only means of addressing the potential risks of the substance. However, SNUNs submitted for significant new uses without any test data may increase the likelihood that EPA will take action under section 5(e), particularly if satisfactory test results have not been obtained from a prior submitter. EPA recommends that potential SNUN submitters contact EPA early enough so that they will be able to conduct the appropriate tests.

SNUN submitters should be aware that EPA will be better able to evaluate SNUNs which provide detailed information on:

(1) Human exposure and environmental release that may result from the significant new use of the chemical substances.

(2) Potential benefits of the substances.

(3) Information on risks posed by the substances compared to risks posed by potential substitutes.

VI. Procedural Determinations

EPA is establishing through this rule some significant new uses which have been claimed as CBI. EPA is required to keep this information confidential to protect the CBI of the original PMN submitter. EPA promulgated a procedure to deal with the situation where a specific significant new use is CBI. This procedure appears in 40 CFR 721.1725(b)(1) and is similar to that in § 721.11 for situations where the chemical identity of the substance subject to a SNUR is CBI. This procedure is cross-referenced in each of these SNURs.

A manufacturer or importer may request EPA to determine whether a proposed use would be a significant new use under this rule. Under the procedure incorporated from § 721.1725(b)(1), a manufacturer or importer must show that it has a *bona fide* intent to manufacture or import the substance and must identify the specific use for which it intends to manufacture or import the substance. If EPA concludes that the person has shown a *bona fide* intent to manufacture or import the substance, EPA will tell the person whether the use identified in the *bona fide* submission would be a significant new use under the rule. Since most of the chemical identities of the substances subject to these SNURs are also CBI, manufacturers and processors can combine the *bona fide* submission under the procedure in § 721.1725(b)(1) with that under § 721.11 into a single step.

VII. Applicability of Rule to Uses Occurring Before Effective Date of the Final Rule

To establish a significant ''new'' use, EPA must determine that the use is not ongoing. The chemical substances subject to this rule have recently undergone premanufacture review. In cases where EPA has not received a notice of commencement (NOC) and the substance has not been added to the Inventory, no other person may commence such activities without first submitting a PMN. For substances for which an NOC has not been submitted at this time, EPA has concluded that the uses are not ongoing. However, EPA recognizes in cases when chemical substances identified in this SNUR are added to the Inventory prior to the effective date of the rule, the substances may be manufactured, imported, or processed by other persons for a significant new use as defined in this rule before the effective date of the rule. However, all four of the substances contained in this rule have CBI chemical identities, and since EPA has received a limited number of post-PMN *bona fide* submissions, the Agency believes that it is highly unlikely that any of the significant new uses described in the following regulatory text are ongoing.

As discussed in the **Federal Register** of April 24, 1990 (55 FR 17376), EPA has decided that the intent of section 5(a)(1)(B) is best served by designating a use as a significant new use as of the date of proposal rather than as of the effective date of the rule. Thus, persons who begin commercial manufacture, import, or processing of the substances regulated through this SNUR will have to cease any such activity before the effective date of this rule. To resume their activities, these persons would have to comply with all applicable SNUR notice requirements and wait until the notice review period, including all extensions, expires.

EPA has promulgated provisions to allow persons to comply with this SNUR before the effective date. If a person were to meet the conditions of advance compliance under § 721.45(h), the person would be considered to have met the requirements of the final SNUR for those activities. If persons who begin commercial manufacture, import, or processing of the substance between publication and the effective date of the SNUR do not meet the conditions of advance compliance, they must cease that activity before the effective date of the rule. To resume their activities, these persons would have to comply with all applicable SNUR notice

requirements and wait until the notice review period, including all extensions, expires.

VIII. Economic Analysis

EPA has evaluated the potential costs of establishing significant new use notice requirements for potential manufacturers, importers, and processors of the chemical substance subject to this proposed rule. EPA's complete economic analysis is available in the public record for this proposed rule (OPPTS–50627).

IX. Rulemaking Record

The official record for this rulemaking, as well as the public version, has been established for this rulemaking under docket number OPPTS–50627 (including comments and data submitted electronically as described below). A public version of this record, including printed, paper versions of electronic comments, which does not include any information claimed as CBI, is available for inspection from 12 noon to 4 p.m., Monday through Friday, excluding legal holidays. The official rulemaking record is located in the TSCA Nonconfidential Information Center, Rm. NE–B607, 401 M St., SW., Washington, DC.

Electronic comments can be sent directly to EPA at:

oppt-ncic@epamail.epa.gov

Electronic comments must be submitted as an ASCII file avoiding the use of special characters and any form of encryption. Comments and data will also be accepted on disks in WordPerfect 5.1 file format or ASCII file format. All comments and data in electronic form must be identified by the docket number OPPTS–50627. Electronic comments on this proposed rule may be filed online at many Federal Depository Libraries.

The OPPTS harmonized test guidelines referenced in this document are available on EPA's World Wide Web site under ''Researchers and Scientists,'' ''Environmental Test Methods & Guidelines'' (http://www.epa.gov/epahome/research.htm).

X. Regulatory Assessment Requirements

Under Executive Order 12866 (58 FR 51735, October 4, 1993), this action is not a ''significant regulatory action'' subject to review by the Office of Management and Budget (OMB). In addition, this action does not impose any enforceable duty or contain any unfunded mandate as described in the Unfunded Mandates Reform Act of 1995 (Pub. L. 104–4), or require prior consultation with State officials as specified by Executive Order 12875 (58 FR 58093, October 28, 1993), or involve special considerations of environmental justice related issues as required by Executive Order 12898 (59 FR 7629, February 16, 1994).

An agency may not conduct or sponsor, and a person is not required to respond to, an information collection request unless it displays a currently valid OMB control number. The information collection requirements related to this action have already been approved by OMB pursuant to the Paperwork Reduction Act (PRA), 44 U.S.C. 3501 *et seq.*, under OMB control number 2070–0012 (EPA ICR No. 574). This action does not impose any burdens requiring additional OMB approval. The public reporting burden for this collection of information is estimated to average 100 hours per response. The burden estimate includes the time needed to review instructions, search existing data sources, gather and maintain the data needed, and complete and review the collection of information.

In addition, pursuant to section 605(b) of the Regulatory Flexibility Act (RFA) (5 U.S.C. 601 *et seq.*), the Agency has determined that the promulgation of a SNUR does not have a significant adverse economic impact on a substantial number of small entities. The Agency's generic certification for promulgation of new SNURs appears on June 2, 1997 (62 FR 29684) (FRL–5597–1), and was provided to the Chief Counsel for Advocacy of the Small Business Administration.

XI. Submission to Congress and the General Accounting Office

Under 5 U.S.C. 801(a)(1)(A), as added by the Small Business Regulatory Enforcement Fairness Act of 1996, the Agency has submitted a report containing this proposed rule and other required information to the U.S. Senate, the U.S. House of Representatives, and the Comptroller General of the General Accounting Office prior to publication of this proposed rule in today's **Federal Register**. This is not a major rule as defined by 5 U.S.C. 804(2).

List of Subjects in 40 CFR Part 721

Environmental protection, Chemicals, Hazardous materials, Recordkeeping and reporting requirements.

Dated: August 4, 1997.

Ward Penberthy,

Acting Director, Chemical Control Division, Office of Pollution Prevention and Toxics.

Therefore, it is proposed that 40 CFR part 721 be amended as follows:

PART 721—[AMENDED]

1. The authority citation for part 721 would continue to read as follows:

Authority: 15 U.S.C. 2604, 2607, and 2625(c).

2. By adding new § 721.555 to subpart E to read as follows:

§ 721.555 Alkyl amino nitriles.

(a) *Chemical substance and significant new uses subject to reporting.* (1) The chemical substances identified as alkyl amino nitriles (PMNs P–96–1674 and P–96–1675) are subject to reporting under this section for the significant new uses described in paragraph (a)(2) of this section.

(2) The significant new uses are:

(i) *Protection in the workplace.* Requirements as specified in § 721.63 (a)(2)(iii), (a)(4), (a)(5)(i), (a)(6)(ii),(a)(6)(v), and (c). A full face shield is required if splashing or spraying occurs.

(ii) *Hazard communication program.* Requirements as specified in § 721.72 (c)(1) and (c)(2)(iv). The MSDS required by this paragraph shall include the following statement: Ocular exposure may cause death.

(iii) *Industrial, commercial, and consumer activities.* Requirements as specified in § 721.80 (g) and (l).

(b) *Specific requirements.* The provisions of subpart A of this part apply to this section except as modified by this paragraph.

(1) *Recordkeeping.* Recordkeeping requirements as specified in § 721.125 (a), (b), (c), (d), (h), and (i) are applicable to manufacturers, importers, and processors of this substance.

(2) *Limitations or revocation of certain notification requirements.* The provisions of § 721.185 apply to this section.

3. By adding new § 721.2077 to subpart E to read as follows:

§ 721.2077 Substituted carbazate.

(a) *Chemical substance and significant new uses subject to reporting.* (1) The chemical substance identified generically as a substituted carbazate (PMN P–97–267) is subject to reporting under this section for the significant new uses described in paragraph (a)(2) of this section.

(2) The significant new uses are:

(i) *Hazard communication program.* Requirements as specified in § 721.72

(c)(1) and (c)(2)(iv). The MSDS required by this paragraph shall include the following statements: Overexposure to this material may cause severe acute toxicity including death. This concern is particularly true with respect to direct contact to the eyes. Exposure to the eyes may cause severe acute toxicity including death.

(ii) *Industrial, commercial, and consumer activities.* Requirements as specified in § 721.80 (a), (b), (c), and (j).

(b) *Specific requirements.* The provisions of subpart A of this part apply to this section except as modified by this paragraph.

(1) *Recordkeeping.* Recordkeeping requirements as specified in § 721.125 (a), (b), (c), (h), and (i) are applicable to manufacturers, importers, and processors of this substance.

(2) *Limitations or revocation of certain notification requirements.* The provisions of § 721.185 apply to this section.

(3) *Determining whether a specific use is subject to this section.* The provisions of § 721.1725(b)(1) apply to this section.

4. By adding new § 721.5460 to subpart E to read as follows:

§ 721.5460 Organosolv lignin.

(a) *Chemical substance and significant new uses subject to reporting.* (1) The chemical substance identified as an organosolv lignin (PMN P–95–1584; CAS No. 8068–03–9) is subject to reporting under this section for the significant new use described in paragraph (a)(2) of this section.

(2) The significant new use is any manufacture, processing or use of the substance with a number average molecular weight less than 1000 daltons or greater than or equal to 1000 daltons with an oligomer content greater than 10 percent below molecular weight 500 and greater than 25 percent below molecular weight 1000.

(b) *Specific requirements.* The provisions of subpart A of this part apply to this section except as modified by this paragraph.

(1) *Recordkeeping.* Recordkeeping requirements as specified in § 721.125 (a), (b), (c), and records documenting compliance with the designated molecular weight requirements are applicable to manufacturers, importers, and processors of this substance.

(2) *Limitations or revocation of certain notification requirements.* The provisions of § 721.185 apply to this section.

[FR Doc. 97–21412 Filed 8–12–97; 8:45 am]

BILLING CODE 6560–50–F

FEDERAL COMMUNICATIONS COMMISSION

47 CFR Part 73

[MM Docket No. 97–70, RM–9020]

Radio Broadcasting Services; El Reno, OK

AGENCY: Federal Communications Commission.

ACTION: Proposed rule; dismissal of.

SUMMARY: The Commission dismisses the request of Fred R. Morton to allot Channel 293A to El Reno, OK, as the community's first local FM service. *See* 62 FR 9408, March 3, 1997. No comments were received from Morton or any other party expressing an intention to file an application for the channel, if allotted. With this action, this proceeding is terminated.

FOR FURTHER INFORMATION CONTACT: Leslie K. Shapiro, Mass Media Bureau, (202) 418–2180.

SUPPLEMENTARY INFORMATION: This is a synopsis of the Commission's Report and Order, MM Docket No. 97–70, adopted July 30, 1997, and released August 8, 1997. The full text of this Commission decision is available for inspection and copying during normal business hours in the FCC Reference Center (Room 239), 1919 M Street, NW., Washington, DC. The complete text of this decision may also be purchased from the Commission's copy contractor, International Transcription Services, Inc., (202) 857–3800, 1231 20th Street, NW, Washington, DC 20036.

List of Subjects in 47 CFR Part 73

Radio broadcasting.

Federal Communications Commission.

John A. Karousos,

Chief, Allocations Branch, Policy and Rules Division, Mass Media Bureau.

[FR Doc. 97–21376 Filed 8–12–97; 8:45 am]

BILLING CODE 6712–01–P

FEDERAL COMMUNICATIONS COMMISSION

47 CFR Part 73

[MM Docket No. 97–174, RM–9146]

Radio Broadcasting Services; Hamilton, TX

AGENCY: Federal Communications Commission.

ACTION: Proposed rule.

SUMMARY: The Commission requests comments on a petition filed by North Texas Broadcasting requesting the allotment of Channel 285C3 to Hamilton, Texas. Channel 285C3 can be allotted to Hamilton in compliance with the Commission's minimum distance separation requirements with a site restriction 13.4 kilometers (8.3 miles) south. The coordinates for Channel 285C3 at Hamilton are 31–49–25 NL and 98–06–49 WL.

DATES: Comments must be filed on or before September 29, 1997, and reply comments on or before October 14, 1997.

ADDRESSES: Federal Communications Commission, Washington, DC 20554. In addition to filing comments with the FCC, interested parties should serve the petitioner, or its counsel or consultant, as follows: William D. Silva, 5335 Wisconsin Avenue, N.W., Suite 400, Washington, D.C. 20015–2003 (Counsel for petitioner).

FOR FURTHER INFORMATION CONTACT: Pam Blumenthal, Mass Media Bureau, (202) 418–2180.

SUPPLEMENTARY INFORMATION: This is a synopsis of the Commission's Notice of Proposed Rule Making, MM Docket No. 97–174, adopted July 30, 1997, and released August 8, 1997. The full text of this Commission decision is available for inspection and copying during normal business hours in the FCC's Reference Center (Room 239), 1919 M Street, NW, Washington, DC. The complete text of this decision may also be purchased from the Commission's copy contractor, ITS, Inc., (202) 857–3800, 1231 20th Street, NW, Washington, DC 20036.

Provisions of the Regulatory Flexibility Act of 1980 do not apply to this proceeding.

Members of the public should note that from the time a Notice of Proposed Rule Making is issued until the matter is no longer subject to Commission consideration or court review, all *ex parte* contacts are prohibited in Commission proceedings, such as this one, which involve channel allotments. See 47 CFR 1.1204(b) for rules governing permissible *ex parte* contacts.

For information regarding proper filing procedures for comments, see 47 CFR 1.415 and 1.420.

List of Subjects in 47 CFR Part 73

Radio broadcasting.

Federal Communications Commission.

John A. Karousos,

Chief, Allocations Branch, Policy and Rules Division, Mass Media Bureau.

[FR Doc. 97–21375 Filed 8–12–97; 8:45 am]

BILLING CODE 6712–01–P

FEDERAL COMMUNICATIONS COMMISSION

47 CFR Part 73

[MM Docket No. 97–173, RM–9134]

Radio Broadcasting Services; Lexington, TX

AGENCY: Federal Communications Commission.

ACTION: Proposed rule.

SUMMARY: The Commission requests comments on a petition by Lee County Broadcasters seeking the allotment of Channel 286A to Lexington, Texas, as the community's first local aural transmission service. Channel 286A can be allotted to Lexington in compliance with the Commission's minimum distance separation requirements with a site restriction 13.3 kilometers (8.3 miles) north in order to avoid a short-spacing conflict with the licensed operation of Station KBUK–FM, Channel 285A, La Grange, Texas. The coordinates for Channel 286A at Lexington 30–31–36 NL and 96–57–45 WL.

DATES: Comments must be filed on or before September 29, 1997, and reply comments on or before October 14, 1997.

ADDRESSES: Federal Communications Commission, Washington, DC 20554. In addition to filing comments with the FCC, interested parties should serve the petitioner, or its counsel or consultant, as follows: Henry E. Crawford, Esq., 1150 Connecticut Avenue, N.W., Suite 900, Washington, D.C. 20036 (Counsel for petitioner).

FOR FURTHER INFORMATION CONTACT: Pam Blumenthal, Mass Media Bureau, (202) 418–2180.

SUPPLEMENTARY INFORMATION: This is a synopsis of the Commission's Notice of Proposed Rule Making, MM Docket No. 97–173, adopted July 30, 1997, and released August 8, 1997. The full text of this Commission decision is available for inspection and copying during normal business hours in the FCC's Reference Center (Room 239), 1919 M Street, NW, Washington, DC. The complete text of this decision may also be purchased from the Commission's copy contractor, ITS, Inc., (202) 857–3800, 1231 20th Street, NW, Washington, DC 20036.

Provisions of the Regulatory Flexibility Act of 1980 do not apply to this proceeding.

Members of the public should note that from the time a Notice of Proposed Rule Making is issued until the matter is no longer subject to Commission consideration or court review, all *ex parte* contacts are prohibited in Commission proceedings, such as this one, which involve channel allotments. See 47 CFR 1.1204(b) for rules governing permissible *ex parte* contacts.

For information regarding proper filing procedures for comments, see 47 CFR 1.415 and 1.420.

List of Subjects in 47 CFR Part 73

Radio broadcasting.

Federal Communications Commission.

John A. Karousos,

Chief, Allocations Branch, Policy and Rules Division, Mass Media Bureau.

[FR Doc. 97–21373 Filed 8–12–97; 8:45 am]

BILLING CODE 6712–01–P

DEPARTMENT OF COMMERCE

50 CFR Part 229

[Docket No. 970129015–7127–03; I.D. 042597B]

RIN 0648–AI84

Taking of Marine Mammals Incidental to Commercial Fishing Operations; Gulf of Maine Harbor Porpoise Take Reduction Plan Regulations

AGENCY: National Marine Fisheries Service (NMFS), National Oceanic and Atmospheric Administration (NOAA), Commerce.

ACTION: Proposed rule; request for comments.

SUMMARY: NMFS proposes regulations to implement a plan to reduce the bycatch and mortality of harbor porpoises that occur incidental to sink gillnet fishing in the Gulf of Maine. These regulations were based on a draft Harbor Porpoise Take Reduction Plan (HPTRP) submitted by the Gulf of Maine Harbor Porpoise Take Reduction Team (HPTRT) pursuant to the Marine Mammal Protection Act (MMPA). NMFS seeks comment on the draft Harbor Porpoise Take Reduction Plan (HPTRP), NMFS' proposed changes to the draft plan, the proposed regulations to implement the plan and the Environmental Assessment (EA) of the plan.

DATES: Comments must be received by October 14, 1997.

ADDRESSES: Send comments to Chief, Marine Mammal Division, Office of Protected Resources, National Marine Fisheries Service, 1315 East-West Highway, Silver Spring, MD 20910–3226. Copies of the draft HPTRP and EA are available upon request from Douglas Beach, Northeast Region, NMFS, One Blackburn Drive, Gloucester, MA 01930, or from Donna Wieting, Office of Protected Resources, NMFS, 1315 East-West Highway, Silver Spring, MD 20910–3226.

FOR FURTHER INFORMATION CONTACT: Kevin Chu, NMFS, 508–495–2291 or Donna Wieting, NMFS, 301–713–2322.

SUPPLEMENTARY INFORMATION: The Gulf of Maine sink gillnet fishery is classified as a Category I fishery under section 118 of the MMPA, 16 U.S.C. 1361 *et seq.*. A Category I fishery is a fishery that has frequent incidental mortality and serious injury of marine mammals. The fishery operates year-round in nearshore and offshore waters. Much of the sink gillnet activity in the Gulf of Maine is regulated by the New England Multispecies Fishery Management Plan (FMP). Gillnet fishing for other species, such as monkfish and dogfish, will be governed by FMPs and implementing regulations that are currently under development by the New England Fishery Management Council (NEFMC) and the Mid-Atlantic Fishery Management Council (MAFMC), respectively.

The Gulf of Maine sink gillnet fishery has a historical incidental bycatch of a strategic marine mammal stock, the harbor porpoise (*Phocoena phocoena*). A strategic stock is a stock: (1) For which the level of direct human-caused mortality exceeds the potential biological removal (PBR) level; (2) that is declining and is likely to be listed under the Endangered Species Act (ESA) in the foreseeable future; or (3) that is listed as a threatened or endangered species under the ESA. The incidental bycatch of harbor porpoises in the Gulf of Maine sink gillnet fishery exceeds the PBR level established for that stock. The Gulf of Maine Stock of harbor porpoise has been proposed for listing as threatened under the ESA (58 FR 3108, January 7, 1993).

Section 118 of the MMPA requires NMFS to develop and implement a take reduction plan to assist in the recovery or to prevent the depletion of each strategic stock that interacts with a Category I or II fishery. A Category II fishery is a fishery that has occasional incidental mortality and serious injury of marine mammals. The immediate goal of a take reduction plan is to reduce, within 6 months of its implementation, the mortality and serious injury of strategic stocks incidentally taken in the course of commercial fishing operations to below the PBR levels established for such stocks. The PBR level is the maximum number of animals that can be removed annually from a marine mammal stock by human causes while allowing that

stock to reach or maintain its optimum sustainable population. The PBR level for harbor porpoises is 483 animals per year (62 FR 3005, January 21, 1997).

Accordingly, NMFS established the HPTRT on February 12, 1996 (61 FR 5384, February 12, 1996), to prepare a draft take reduction plan. The HPTRT included representatives of the sink gillnet fishery, NMFS, state marine resource management agencies, the NEFMC, environmental organizations, and academic and scientific organizations. In selecting these team members, NMFS sought an equitable balance among representatives of resource user and non-user interests.

The HPTRT was tasked with developing a consensus draft plan for reducing incidental mortality and serious injury of harbor porpoises in the Gulf of Maine sink gillnet fishery. The HPTRT met five times between February and July 1996 and submitted a consensus draft plan to NMFS on August 8, 1996. The draft HPTRP is a comprehensive approach to the problem and includes:

1. A Core Management Plan that consists of a schedule of time/area closures and periods when pingers (acoustic deterrent devices) would be required for each of the established management areas. Consensus on the Core Management Plan was contingent on the following understandings: (A) That the regime was recommended only for the first year of the plan and that the team reconvene 7 months after the plan has been implemented; (B) that a scientific experiment be conducted to study the effectiveness of pingers in reducing harbor porpoise bycatch in the Mid-Coast Area in the spring, and (C) that research on the effect of pingers on harbor porpoises and other marine life be conducted at the same time, including the initiation of research on the possible habituation of harbor porpoise to pingers.

2. An Implementation Plan that includes recommendations regarding a detailed census of the gillnet fleet; outreach, training and certification programs for fishers who wish to use pingers; NMFS' and the HPTRT's coordination and consultation with Canadian counterparts regarding the reduction of harbor porpoise takes in Canadian waters; enforcement of the HPTRP; coordination of HPTRT's efforts with those of the Mid-Atlantic Take Reduction Team; investigation of impacts on harbor porpoise by the state gillnet and bait gillnet fisheries; and the reconvening of the team to provide periodic evaluations of the HPTRP.

3. A series of recommendations regarding NMFS' collection, analysis, and management of data on the status of the harbor porpoise stock, sink gillnet fishery effort, by-catch rate, and total by-catch estimates; and recommendations regarding design of pinger experiments and gear technology research.

The HPTRP would govern and pertain to all fishing with sink gillnets and other gillnets capable of catching multispecies in the inshore and offshore waters of New England from Maine through Rhode Island.

The Core Management Plan

As part of the Core Management Plan, the HPTRT recommended a schedule of time/area closures and periods during which pinger use is required for each of the established sink gillnet management areas (Table 1). The HPTRT expects that these restrictions would result in a reduction of harbor porpoise bycatch to below the PBR level.

TABLE 1.—TIME/AREA CLOSURES TO SINK GILLNET FISHING AND PERIODS DURING WHICH PINGER USE WOULD BE REQUIRED, UNDER THE DRAFT HPTRP

Downeast Area:.	
Aug. 15 to Sep. 13	Closed.
Mid-coast Area:	
Jan. 1–31	Closed.
Mar. 1 to May 15	Closed.
Sept. 15 to Oct. 31	Open, pingers required on all sink gillnets.
Nov. 1 to Dec. 31	Closed.
Massachusetts Bay Area:	
Feb. 1–28/29	Open, pingers required on all sink gillnets.
Mar. 1–31	Closed.
Apr. 1–30	Open, pingers required on all sink gillnets.
South Cape Cod Area:	
Feb. 1–28/29	Open, pingers required on all sink gillnets.
Mar. 1–31	Closed.
Apr. 1–30	Open, pingers required on all sink gillnets.

The New England sink gillnet fishery is governed by the Northeast Multispecies FMP and implementing regulations. The NEFMC developed the FMP to meet groundfish conservation and marine mammal conservation goals. Concurrent with the HPTRT's proceeding, the NEFMC considered new FMP changes which would affect sink gillnet fishing. This action—specifically, opening the Mid-Coast Area to gillnet fishing with pingers during November and December—was implemented subsequent to NMFS' receipt of the HPTRT plan. As the NEFMC actions altered the assumptions upon which the HPTRT's consensus proceedings were based, NMFS has strived to propose a take reduction plan that maintains the spirit of the HPTRT's comprehensive consensus plan. NMFS is proposing to adopt the HPTRT's recommendations for closures and pinger use in the Downeast Area, Massachusetts Bay Area, and Cape Cod South Area. However, for the Mid-Coast Area, NMFS proposes to combine the recommendations from the HPTRT and the NEFMC regarding closures and pinger use (Table 2).

TABLE 2.—SUMMARY OF DIFFERENCES BETWEEN DRAFT AND PROPOSED PLAN IN THE MID-COAST AREA

Period	HPTRT's Plan	NMFS' proposed change to the plan
Jan	Closed	Closed.
Mar. 1–May 15.	Closed	Closed.[1]
Sep. 15–Oct. 31.	Open, pingers required.	Open, pingers required.
Nov. 1–Dec. 31.	Closed	Open, pingers required.

[1] In 1996, the Mid-Coast Closure Area was closed from March 25-April 25. Framework Adjustment 19 to Amendment 7 of the Multispecies Fishery Management Plan implemented a closure of Jeffrey's Ledge Closure Area (a subset of the Mid-Coast Area) from May 1 through May 31, 1997. The same regulatory action implements a closure of the entire Mid-Coast Area from May 10 through May 30 of each year after 1997. NMFS' proposed change melds Framework Adjustment 19 with the actions proposed by the HPTRT.

NMFS' proposed change increases the fishing opportunities for sink gillnet fishermen who would have been excluded from fishing during November and December in the draft HPTRP. Based on the historical by-catch records and the determined/assumed effectiveness of pingers in reducing by-catch in the Mid-Coast Area during the fall, this change from the draft HPTRP is expected to result in about eight additional harbor porpoise takes. However, the total annual take of harbor porpoise is still expected to be below the PBR level. The change from the draft HPTRP would increase the amount of time when pingers are broadcasting in the ocean.

NMFS' proposed implementing regulations include the following periods and areas which would be closed to sink gillnet fishing or would be open to sink gillnet fishing only if

pingers are employed in the prescribed manner (Table 3).

TABLE 3.—TIME/AREA CLOSURES TO SINK GILLNET FISHING AND PERIODS DURING WHICH PINGER USE WOULD BE REQUIRED, AS PROPOSED BY NMFS

Downeast Area: Aug.15 to Sep.13.	Closed.
Mid-coast Area:	
Jan. 1–31	Closed.
Mar. 1 to May 15	Closed.
Sep. 15 to Dec. 31	Open, pingers required on all sink gillnets.
Massachusetts Bay Area:	
Feb. 1–28/29	Open, pingers required on all sink gillnets.
Mar. 1–31	Closed.
Apr. 1–30	Open, pingers required on all sink gillnets.
South Cape Cod Area:	
Feb. 1–28/29	Open, pingers required on all sink gillnets.
Mar. 1–31	Closed.
Apr. 1–30	Open, pingers required on all sink gillnets.

The proposed regulations would implement the modified Core Management Plan under the authority of the MMPA. As the conservation of harbor porpoise is one of the goals of the Multispecies FMP, NMFS will request that the NEFMC consider the measures herein and prepare regulations implementing the take reduction plan, consistent with groundfish management goals, under the Magnuson-Stevens Fishery Conservation and Management Act (Magnuson-Stevens Act). The MMPA regulations proposed herein would govern sink gillnet fishing by anyone in all state and Federal waters of New England from Maine through Rhode Island; the Magnuson-Stevens Act regulations would govern only the fishing of federally permitted fishers in those areas. Otherwise, the actions and management areas described in the regulatory text below are consistent with the Northeast Multispecies FMP at the time of this proposed rule's publication. Council action under the Magnuson-Stevens Act that satisfies the intent of the MMPA would make preparation of final regulations under the MMPA unnecessary.

The HPTRT's full consensus on the Core Management Plan was contingent on three additional measures. First, that the regime be implemented for only 1 year and that NMFS reconvene the team in the seventh month after the HPTRP's implementation, and semiannually thereafter, in order to review the effectiveness of the recommended actions and to revise the take reduction plan, if necessary. The proposed regulations to implement the proposed HPTRT would be effective for more than 1 year because of the burden of having to conduct another rulemaking. However, NMFS will consider modifying the regulations based on the HPTRT's recommendations when the team reconvenes. The HPTRT requested that NMFS provide a variety of detailed and updated information regarding fishery effort, by-catch rates, by-catch estimates throughout the species' range (to include Canada and the Mid-Atlantic), and compliance with the plan. NMFS intends to reconvene the HPTRT and will strive to provide the latest and best information, as requested. However, in order to ensure the HPTRT is provided with the requested data and that meetings are productive, the timing of the meetings must allow sufficient time for NMFS to assemble and analyze effort and by-catch data for the period of concern.

The second measure upon which the HPTRT's full consensus on the Core Management Plan was contingent, is that a scientific experiment be conducted during the spring closure in the Mid-Coast Area in 1997 to determine the effectiveness of pingers as a harbor porpoise conservation technique. The team recommended that the experiment last a maximum of 45 days and that it be stopped immediately if 70 harbor porpoises were caught in the course of the experiment. The HPTRT also made several specific recommendations to ensure that the experiment is statistically significant and scientifically valid. This experiment was conducted in March and April of 1997, and an analysis of the results of this experiment is currently underway.

A third measure upon which the HPTRT's full consensus on the Core Management Plan was contingent is that research be conducted on the effects of pingers on harbor porpoise and other marine life. The HPTRT recommended that research be conducted in the Mid-Coast Area from September 15 to October 31 (when pingers would be in use) to begin to address: (1) Whether harbor porpoise are displaced from important habitat areas by pingers, (2) whether the rate of entanglement of porpoise in sink gillnets changes with continued pinger use, and (3) whether pingers affect other marine life. NMFS has contracted with the Woods Hole Oceanographic Institution to conduct this research.

Implementation Measures

A second part of the draft HPTRP consists of recommendations for implementing the Core Management Plan. The HPTRT noted that effective implementation of the plan depends on enhanced cooperation between researchers, regulators and fishers, and the plan includes recommendations for increased outreach, training, and cooperative efforts. The team acknowledged the changing nature of fishing activities in response to a variety of recent and on-going fishery management and protected species conservation actions. The recommended implementation measures address the need for more up-to-date and continually updated methods of estimating fishery effort and by-catch throughout the species' range.

Census of the Gillnet Fleet

The HPTRT recommended that NMFS conduct or support a census of the sink gillnet fleet to determine seasonal effort, type and amount of gear fished, target species, and areas fished. The HPTRT recommended that the census include interviews with fishers and, for the purpose of facilitating NMFS' public outreach efforts, identify points of contact in each port and mailing/phone lists for the fishery participants. The draft HPTRP states that since the reliability of total by-catch estimates is dependent on the quality of the fishery effort data, NMFS should consider adopting a system that uses nets as the measure of effort versus the current landings weighout process. In the interest of achieving a real-time measure of fishing effort, the HPTRT also recommended that NMFS investigate the practicability of dock-side interviews or a computer automated or call-in system to augment the weighout system.

NMFS is concerned that a census of the fleet would only provide a snapshot of fishing activity, and the information collected may be of little value for the purpose of estimating by-catch on a real-time basis. NMFS is currently assessing the usefulness of vessel logbooks for this purpose. However, the development of a reporting system that provides timely, consistent, and thorough measures of fishery effort may require an overhaul of existing reporting mechanisms. NMFS is investigating the feasibility and value of the technological alternatives proposed by the HPTRT. Ideally, improvements in determining fishery effort could be applied across areas and fisheries beyond the scope of this plan as well. NMFS seeks comments on these and

other potential effort assessment and reporting mechanisms.

Outreach and Certification Programs

The HPTRT recommended that NMFS conduct certification programs for all fishers who wish to participate in a pinger fishery. Under the HPTRT's proposed plan, the program would be a forum in which fishers would learn about the take reduction team process, MMPA reporting requirements, and proper pinger use. Also, NMFS could use the sessions to invite further take reduction and plan implementation ideas from fishers. The HPTRT recommended that completion of the certification program by sink gillnet fishers be a prerequisite for the issuance of an certificate authorizing the incidental take of marine mammals under section 118 of the MMPA and for participation in those segments of the fishery wherein pingers are required. While the value of informative workshops is clear, NMFS is not proposing a mandatory certification program at this time, due to the administrative burden it would present to fishers and to the agency. NMFS is proposing instead to prepare informative printed materials that fully describe the use of pingers and the elements of the take reduction plan. NMFS also proposes to conduct a series of workshops in conjunction with existing fishery gatherings throughout New England to explain not only components of this take reduction plan but also of the existing and forthcoming measures to protect endangered large whales from entanglements in fixed fishing gear. NMFS requests comments on this approach to public outreach and training of fishery participants.

Under the HPTRT's proposed certification program, there is a recommendation that NMFS establish specifications for pingers, their use and maintenance, and various NMFS' reporting requirements. NMFS concurs with the recommendations and has included the following definition incorporating such pinger specifications in the proposed rule: A pinger is an acoustic deterrent device that, when immersed in water, broadcasts a 10± kHz sound (± 2 kHz) at 132 dB (± 4 dB) re 1 micropascal at 1 meter, that lasts 300 milliseconds (± 15 milliseconds), and repeats every 4 seconds (± .2 seconds). An operational and functioning pinger must be attached at the end of each string of sink gillnets and at the bridle of every net within a string of nets. The HPTRT's recommendations regarding reporting of marine mammal takes within 48 hours, the requirement to carry an observer if so requested by NMFS, and submittal of weekly trip reports are addressed under separate regulations found at 50 CFR 229.6, 229.7, and 648.7.

Takes of Harbor Porpoise in Canadian and US Mid-Atlantic Waters

The HPTRT recognized that its area of concern did not reflect the full range of the harbor porpoise and that takes incidental to fishing operations occur throughout its range in Canadian waters and along the US Mid-Atlantic coast. In hopes of ensuring that the Canadian Department of Fisheries and Oceans (DFO) implements measures in the northern range of the harbor porpoise commensurate with the HPTRP, the team recommended that NMFS consult extensively with DFO. Specifically, the HPTRT recommends that NMFS seek DFO's comments on the plan, urge DFO to develop a complementary plan, review with DFO the progress of the HPTRP and any Canadian take reduction strategies, and outline a schedule for meetings between NMFS, representatives of the HPTRT, DFO, and representatives of the DFO's Harbor Porpoise Advisory Team to jointly review population and by-catch data. NMFS has a collegial relationship with DFO and values the exchange of data and ideas that such a relationship affords. In the interest of continuing that relationship, NMFS will request that DFO consider the HPTRT's recommendations.

In U.S. Mid-Atlantic waters, harbor porpoises are taken in a number of coastal fisheries. These takes occur in significant numbers, and NMFS convened the Mid-Atlantic Take Reduction Team in March 1997 to address the matter. During the HPTRT's deliberations, information was not available on the number of takes that occur in the Mid-Atlantic, and therefore, the HPTRT was not able to take into account the significance and magnitude of these extra-regional takes. When NMFS reconvenes the HPTRT, the latest and best information on porpoise by-catch in the Mid-Atlantic will be considered, and an equitable PBR level allocation scheme will be developed for each segment of the fishery. To provide the necessary coordination between the teams and consistency across the regions, NMFS, at the recommendation of the HPTRT, has included several members of the HPTRT on the Mid-Atlantic Take Reduction Team and will strive to ensure that data on by-catch and effort in both areas will be shared with both teams. NMFS requests comments on its plans for addressing takes of harbor porpoises throughout the full range of the species.

Enforcement Priority

To meet the goals of significantly reducing by-catch of harbor porpoises, the HPTRT recommended that NMFS give enforcement of the HPTRP a high priority. Further, the HPTRT recommended that NMFS provide the team and other interested parties the opportunity to review and comment on enforcement guidelines.

The NMFS Enforcement Division will enforce the final regulations implementing the plan. The policies and priorities of the NMFS Enforcement Division are constantly evolving to provide the best possible response to changing regulations, seasonality of fisheries, levels of compliance, sensitivity of resources, and a number of other factors. Given the dynamic and broad range of conditions and contingencies with which the NMFS Enforcement Division must contend, it would be impractical and highly unusual for NMFS to develop and seek public comment on an enforcement plan focused on this specific take reduction plan. In an effort to enhance communications and to facilitate enforcement of the take reduction plan, Special Agents from the NMFS Enforcement Division will attempt to attend upcoming HPTRT meetings. Also, the HPTRT and other interested parties are encouraged to submit written comments to the NMFS Enforcement Division at any time.

Baitnets and Other Gillnets

The HPTRT recognized that certain gillnet fisheries that are not regulated and/or not subject to the requirements of the Federal observer program may occur in waters covered by the take reduction plan and may pose a by-catch risk to harbor porpoises. The team noted that the HPTRP is focused on the sink gillnet fishery and, with the intent of ensuring that the gillnet fisheries that may be exempted from regulations or monitoring do not set nets in time-areas closed for the protection of harbor porpoises, the HPTRT recommended that NMFS restrict all gillnets, with the exception of baitnets, as provided in the HPTRP. The exception for baitnets recognizes the use of small mesh pelagic gillnets to harvest bait for the tuna and lobster fisheries. Framework Adjustment 16 to the New England Multispecies FMP defines a baitnet as a single pelagic gillnet, not more than 300 ft (90.9 m) long nor more than 6 ft (1.8 m) deep, with a maximum mesh size of 3 in (7.6 cm), and requires that the net be attached to the boat and fished in the upper two-thirds of the water column (50 CFR 648.81(f)(2)(ii)). The HPTRT

assumed that these small mesh nets, which are constantly monitored, pose little risk to harbor porpoises. Accordingly, the proposed regulations would be applicable to all fishers who use sink gillnets or other gillnets capable of catching multispecies except for a single pelagic gillnet as described in 50 CFR 648.81(f)(2)(ii). Furthermore, under the authority of the MMPA, the proposed regulations would apply to fisheries operating in both state and Federal waters. NMFS will request that the NEFMC consider the measures herein and prepare regulations implementing the measures under the Magnuson-Stevens Act as a Framework Adjustment to the Multispecies FMP. Should the NEFMC do so, the language restricting all gillnets capable of catching multispecies, with the exception of baitnets, would likely remain in the regulatory text. However, under the Magnuson-Stevens Act, the regulation would not have quite as broad effect as under the MMPA. Fishers who do not hold a Federal fishery permit and who fish in state waters would not be subject to the regulations under the Magnuson-Stevens Act. NMFS seeks comments from the public on this regulatory implementation strategy.

Data Collection and Management Recommendations

Throughout its proceedings, the HPTRT examined the available data on harbor porpoise abundance, by-catch estimates, fishing effort, and pinger use. In the draft HPTRP, the team identified additional research needs, adjustments to existing data collection methods, and changes to database management and reporting.

The draft HPTRP included several recommendations regarding the conduct and analysis of harbor porpoise abundance surveys. NMFS will follow the recommendations to the extent that good scientific practice and resources allow. To learn more about the harbor porpoise and its environment, the team recommended that NMFS conduct studies of migration with respect to salinity, water temperatures, and other oceanographic variables. NMFS will consider these research needs when the agency reviews priorities for resources allocation.

The HPTRT made several recommendations regarding NMFS' management of observers and use of data collected by observers. NMFS will comply with the recommendations to the extent that good scientific practice and available resources allow.

Finally, the HPTRT identified several long-term research goals. The team recommended that NMFS: (1) Conduct or support a study of by-catch rates with respect to variations in gillnet gear and fishing practices; (2) join with fishers and conservation engineers to develop gear modifications to reduce interactions with harbor porpoises; and (3) investigate ambient noise levels and transmission conditions for the various harbor porpoise management areas. NMFS will consider these long-term research goals when establishing funding priorities. NMFS will request that the HPTRT revisit and refine these recommendations at future meetings of the HPTRT. NMFS seeks comments on the research needs and priorities to address the problem of harbor porpoise by-catch in gillnets.

Classification

This proposed rule has been determined to be not significant for purposes of E.O. 12866.

The Assistant General Counsel for Legislation and Regulation of the Department of Commerce certified to the Chief Counsel for Advocacy of the Small Business Administration that the proposed regulations, if adopted as proposed, would not have a significant economic impact on a substantial number of small entities as follows:

The economic impacts of this proposed rule are minimal and could be offset by reductions in marine mammal entanglement and subsequent reductions in fisher's costs due to net damage or loss. As a worst-case scenario, if fishers were unable to use fishing grounds other than those proposed for closures, or were unable to purchase pingers to use fishing grounds that are closed except to vessels with pingers, the total economic loss experienced as a result of this rule could be as high as $882K per year for the entire fishery. If vessels were to purchase pingers, total net losses (surplus minus the cost of pingers) could be as high as $436K per year for the entire fishery. Individual vessel costs to equip gillnets with pingers would be approximately $4K (80 pingers at $50/pinger). If fishers were able to displace fishing effort and use pingers to access otherwise closed areas, economic impact on the fishery could be as low as $171K per year for the entire fishery. For the 1995 fishing year, there were 378 gillnet category permits issued out of a total number of 4738 multispecies permits, or 8.0 percent. Because the number of vessels affected by this proposed action account for less than 20 percent of the small business entities in the northeast multispecies fishery, the proposed action will not have a significant economic impact on a substantial number of small entities and a Regulatory Flexibility Analysis was not prepared.

The Assistant Administrator for Fisheries, NOAA (AA) has preliminarily determined, based on an EA prepared under the National Environmental Policy Act, that implementation of these regulations would not have a significant impact on the human environment. A copy of the EA prepared for this rule is available for comment upon request (see **ADDRESSES**).

List of Subjects in 50 CFR Part 229

Administrative practice and procedure, Confidential business information, Fisheries, Marine mammals, Reporting and recordkeeping requirements.

Dated: July 30, 1997.

Rolland A. Schmitten,

Assistant Administrator for Fisheries, National Marine Fisheries Service.

For the reasons set out in the preamble, 50 CFR part 229 is proposed to be amended as follows:

PART 229—AUTHORIZATION FOR COMMERCIAL FISHERIES UNDER THE MARINE MAMMAL PROTECTION ACT OF 1972

1. The authority citation for part 229 continues to read as follows:

Authority: 16 U.S.C. 1361 *et seq.*

2. In subpart C, new § 229.33 is added to read as follows:

§ 229.33 Gulf of Maine harbor porpoise take reduction plan.

(a) It is prohibited to fish with, set, haul back, possess on board a vessel, unless stowed in accordance with 50 CFR 648.81(e), or fail to remove sink gillnet gear or gillnet gear capable of catching multispecies, with the exception of a single pelagic gillnet (as described in § 648.81(f)(2)(ii)), from the areas and for the times specified in paragraphs (a)(1) through (a)(4) of this section, except as provided in paragraphs (b)(1) through (b)(3) of this section.

(1) *Northeast Closure Area.* From August 15–September 13 of each fishing year, the restrictions and requirements specified in paragraph (a) of this section apply to the Northeast Closure Area, which is the area bounded by straight lines connecting the following points in the order stated.

NORTHEAST CLOSURE AREA

Point	N. Lat.	W. Long.
NE1	(1)	68°55.0′
NE2	43°29.6′	68°55.0′
NE3	44°04.4′	67°48.7′
NE4	44°06.9′	67°52.8′
NE5	44°31.2′	67°02.7′
NE6	(1)	67°02.7′

[1] Maine shoreline.

(2) *Mid-coast Closure Area.* From January 1–January 31, from March 1–

May 15, and from September 15–December 31, except as provided in paragraph (b)(1) of this section; the restrictions and requirements specified in paragraph (a) of this section apply to the Mid-Coast Closure Area, which is the area bounded by straight lines connecting the following points in the order stated.

MID-COAST CLOSURE AREA

Point	N. Lat.	W. Long.
MC1	42°30′	(1)
MC2	42°30′	70°15′
MC3	42°40′	70°15′
MC4	42°40′	70°00′
MC5	43°00′	70°00′
MC6	43°00′	69°30′
MC7	43°15′	69°30′
MC8	43°15′	69°00′
MC9	(2)	69°00′

1 Massachusetts shoreline.
2 Maine shoreline.

(3) *Massachusetts Bay Closure Area.* From February 1–April 30, except as provided in paragraph (b)(2) of this section, the restrictions and requirements specified in paragraph (a) of this section apply to the Massachusetts Bay Closure Area, which is the area bounded by straight lines connecting the following points in the order stated.

MASSACHUSETTS BAY CLOSURE AREA

Point	N. Lat.	W. Long.
MB1	42°30′	(1),
MB2	42°30′	70°30′
MB3	42°12′	70°30′
MB4	42°12′	70°00′
MB5	(2)	70°00′
MB6	42°00′	(2),
MB7	42°00′	(1)

1 Massachusetts shoreline.
2 Cape Cod shoreline.

(4) *Cape Cod South Closure Area.* From February 1–April 30, except as provided in paragraph (b)(3) of this section, the restrictions and requirements specified in paragraph (a) of this section apply to the Cape Cod South Closure Area, which is the area bounded by straight lines connecting the following points in the order stated.

CAPE COD SOUTH CLOSURE AREA

Point	N. Lat.	W. Long.
CCS1	(1)	71°45′
CCS2	40°40′	71°45′
CCS3	40°40′	70°30′
CCS4	(2)	70°30′

1 Rhode Island shoreline.
2 Massachusetts shoreline.

(b) For the purposes of this subpart, a pinger is an acoustic deterrent device which, when immersed in water, broadcasts a 10 kHz (± 2 kHz) sound at 132 dB (± 4 dB) re 1 micropascal at 1 m, lasting 300 milliseconds (± 15 milliseconds), and repeating every 4 seconds (± .2 seconds). An operating and functional pinger must be attached at the end of each string of the gillnets and at the bridle of every net within a string of nets.

(1) Vessels, subject to the restrictions and regulations specified in paragraph (a) of this section, may fish in the Mid-coast Closure Area from September 15 through December 31 of each fishing year, provided that pingers are used in accordance with the requirements of paragraph (b) of this section.

(2) Vessels, subject to the restrictions and regulations specified in paragraph (a) of this section, may fish in the Massachusetts Bay Closure Area from February 1 through the last day of February and from April 1–April 30 of each fishing year, provided that pingers are used in accordance with the requirements of paragraph (b) of this section.

(3) Vessels, subject to the restrictions and regulations specified in paragraph (a) of this section, may fish in the Cape Cod South Closure Area from February 1 through the last day of February and from April 1–April 30 of each fishing year, provided that pingers are used in accordance with the requirements of paragraph (b) of this section.

[FR Doc. 97–21403 Filed 8–12–97; 8:45 am]
BILLING CODE 3510–22–P

DEPARTMENT OF COMMERCE

National Oceanic and Atmospheric Administration

50 CFR Part 679

[Docket No. 970801188–7188–01; I.D. 070797C]

RIN 0648–AJ45

Fisheries of the Exclusive Economic Zone Off Alaska; Groundfish of the Bering Sea and Aleutian Islands Area; Prohibited Species Catch Limit for Chionoecetes Opilio Crab

AGENCY: National Marine Fisheries Service (NMFS), National Oceanic and Atmospheric Administration (NOAA), Commerce.

ACTION: Proposed rule; proposed change to 1997 final groundfish harvest specifications; request for comments.

SUMMARY: NMFS issues this proposed rule to implement Amendment 40 to the Fishery Management Plan for the Groundfish Fishery of the Bering Sea and Aleutian Islands Area (FMP). This rule would establish a prohibited species catch (PSC) limit for *Chionoecetes opilio* in a new *C. opilio* Bycatch Limitation Zone (COBLZ) of the Bering Sea. Upon attainment of a *C. opilio* bycatch allowance apportioned to a particular trawl fishery category, the COBLZ would be closed to directed fishing for species in that trawl fishery category. This measure is necessary to protect the *C. opilio* stock in the Bering Sea, which has declined to a level that presents a conservation problem. This measure is intended to accomplish the objectives of the FMP with respect to the management of the Bering Sea and Aleutian Islands management area (BSAI) groundfish fishery.

DATES: Comments on the proposed rule must be received by September 29, 1997.

ADDRESSES: Comments should be sent to Chief, Fisheries Management Division, Alaska Region, NMFS, P.O. Box 21668, Juneau, AK 99802, Attn: Lori J. Gravel, or delivered to the Federal Building, 709 West 9th Street, Juneau, AK. Copies of the Environmental Assessment/Regulatory Impact Review/Initial Regulatory Flexibility Analysis (EA/RIR/IRFA) prepared for the amendment may be obtained from the North Pacific Fishery Management Council, Suite 306, 605 West 4th Avenue, Anchorage, AK 99501–2252; telephone: 907–271–2809.

FOR FURTHER INFORMATION CONTACT: Kim S. Rivera, 907–586–7228.

SUPPLEMENTARY INFORMATION:

Background

The U.S. groundfish fisheries of the BSAI in the exclusive economic zone are managed by NMFS under the FMP. The FMP was prepared by the North Pacific Fishery Management Council (Council) under Magnuson-Stevens Fishery Conservation and Management Act (Magnuson-Stevens Act) and is implemented by regulations for the fisheries off Alaska at 50 CFR part 679. General regulations that also pertain to U.S. fisheries appear at subpart H of 50 CFR part 600.

The Council has submitted Amendment 40 for Secretarial review and a Notice of Availability (NOA) of the FMP amendment was published on July 15, 1997 (62 FR 37860). Comments on this proposed rule are invited and must be received on or before September 29, 1997. Public comments on the FMP amendment and the proposed rule must be received on or before September 15, 1997, to be

considered in the approval/disapproval decision on Amendment 40.

Recruitment of Bering Sea *C. opilio* stocks is at a relatively low level, based on recent NMFS bottom trawl survey data. The 1996 *C. opilio* season produced only 64.6 million lb (29,302 metric tons) for the 235 vessels participating. This is the lowest catch since 1984. Survey data from 1996 indicate that adult males are abundant, but females and pre-recruits are becoming less abundant.

The groundfish fisheries incidentally catch crab. An objective of the FMP is to minimize the impact of groundfish fisheries on crab and other prohibited species, while providing for rational and optimal use of the region's fishery resources. All gear types used to catch groundfish have some potential to incidentally catch crab, but the large majority of crab bycatch occurs in trawl fisheries for flatfish.

In view of this FMP objective, the Council initiated an assessment in January 1995 of potential measures to further limit crab bycatch in the groundfish fisheries. At its January 1996 meeting, the Council requested that a suite of crab bycatch management measures be examined in one package, so that the impacts of these measures could be analyzed in a comprehensive manner. This Council initiative also was responsive to increasing concern about the potential impact of crab bycatch on declining stocks and future harvests in the commercial crab fisheries. Proposed alternatives included the establishment of bycatch limits for *C. opilio.* To date, bycatch limits for *C. opilio* have never been established for Bering Sea trawl fisheries.

In June 1996, the Council formed an industry work group to review proposed PSC limits for *C. opilio.* This work group consisted of three crab fishery representatives, three trawl fishery representatives, and one shoreside processing representative. The group met November 6–7, 1996, and came to a consensus on a PSC limit for *C. opilio,* based on the best available scientific information on the abundance and distribution of the specified crab species and their rate of bycatch in fisheries for certain species of groundfish. The agreement negotiated by affected industry groups resulted in a proposal for: (1) Establishment of a *C. opilio* COBLZ, (2) an annual specification of a PSC limit for *C. opilio* in the COBLZ based on the total abundance of *C. opilio* as indicated by the most recent NMFS bottom trawl survey, and (3) establishment of a minimum and maximum PSC limit. At its December 1996 meeting, the Council endorsed the industry work group agreement and recommended that NMFS proceed to establish the COBLZ and implement a PSC limit for *C. opilio* under Amendment 40 to the FMP.

C. opilio Bycatch Limitation Zone (COBLZ)

The bycatch of *C. opilio* in the BSAI groundfish fisheries is highest in the areas north and east of the Pribilof Islands, corresponding to Federal reporting areas 513, 514, and 521. Relatively few *C. opilio* are taken in Zone 1 (Federal reporting areas 508, 509, 512, and 516). About 75 percent of *C. opilio* bycatch comes from Zone 2 (Federal reporting areas 513, 517, and 521), which encompasses much of the adult population. In 1995, 90 percent of the *C. opilio* bycatch in Zone 2 was from Federal reporting areas 513 and 521. Federal reporting area 517 exhibits relatively low abundance of and low bycatch of *C. opilio.* During 1992 through 1994, the average annual *C. opilio* bycatch in Zone 2 was about 10.8 million crabs, or about 0.11 percent of the NMFS total population index. Bycatch of *C. opilio* in 1995 and 1996 was much lower than in previous years, totaling 5.4 million and 3.9 million crabs, respectively. Of the total, 4.3 million and 3.4 million *C. opilio* were taken in Zone 2 in 1995 and 1996, corresponding to 0.05 and 0.06 percent of the total population index, respectively.

The proposed COBLZ encompasses nearly the entire distribution of *C. opilio* in the Bering Sea. The proposed COBLZ includes Federal reporting areas 513, 524, most of 521, approximately half of 523, and a small portion of 514. Only a small number of *C. opilio* are found to the south, outside of this area. Very little fishing effort for flatfish has occurred to the south of the COBLZ. The Council believed that the COBLZ would offer more protection to the *C. opilio* stock than alternative areas examined in the EA/RIR/IRFA.

The proposed COBLZ within the EEZ is an area defined as that portion of the Bering Sea Subarea north of 56°30′ N. lat. that is west of a line connecting the following coordinates in the order listed:

56°30′ N. lat.	165°00′ W. long.
58°00′ N. lat.	165°00′ W. long.
59°30′ N. lat.	170°00' W. long.

and north along 170°00′ W. long. to its intersection with the U.S.-Russian Boundary.

Establishment of a C. opilio PSC Limit in the COBLZ

Amendment 40 would authorize the annual specification of a *C. opilio* PSC limit for the COBLZ. The *C. opilio* PSC limit would be set at 0.1133 percent of the total Bering Sea abundance as indicated by the most recent NMFS bottom trawl survey, with a minimum PSC limit of 4.5 million crabs and a maximum PSC limit of 13 million crabs.

The bycatch of *C. opilio* in the BSAI groundfish fisheries totaled 5.4 million and 3.9 million in 1995 and 1996, respectively, which is a significant reduction from 17.7 million in 1992. About 99 percent of the *C. opilio* bycatch occurs in the trawl fisheries. The yellowfin sole fishery accounts for most of the *C. opilio* bycatch (70 percent of 1992–1994 average).

The *C. opilio* PSC limit would be apportioned among trawl fishery categories as defined at § 679.21(e)(3). The sum of all bycatch allowances of the trawl fishery categories would equal the *C. opilio* PSC limit. Upon attainment of a *C. opilio* bycatch allowance apportioned to a particular trawl fishery category, the COBLZ would be closed to directed fishing for species in that trawl fishery category, except for pollock with nonpelagic trawl gear, according to § 679.21(e)(7)(i).

The Council's proposed *C. opilio* PSC limit is an effort to protect further the stocks of Bering Sea *C. opilio* by limiting the incidental take of this species when the stock is depressed. The proposed criteria for the annual specification of the *C. opilio* PSC limits were developed by the Council-appointed industry work group.

Implementation in 1997

Estimation of prohibited species bycatch uses both observer and industry reports, which provide groundfish and prohibited species catch by Federal reporting area. Therefore, the catch estimation programs currently used by NMFS to monitor PSC limits are constrained by Federal reporting areas. The COBLZ as defined includes portions of existing Federal reporting areas. Therefore, NMFS must revise its current catch monitoring programs to allow for the monitoring of the annual *C. opilio* PSC limit in the COBLZ. These revisions cannot be completed before 1998 for programmatic reasons. If Amendment 40 is approved, monitoring of the *C. opilio* PSC limit in 1997 would be extended to Federal reporting areas 513, 514, 521, 523, and 524. The resulting combined area exceeds the boundaries of the proposed COBLZ. Based on the abundance of *C. opilio*

estimated from the 1996 NMFS trawl survey (5.4 billion crabs), the PSC limit for *C. opilio* in 1997 would have been 6,147,000 crabs in the COBLZ. In 1997, the PSC limit of 6,147,000 would be adjusted upward by 10 percent, for a total PSC limit of 6,760,000 crabs, to account for the larger area being monitored. *C. opilio* bycatch accrued from January 1 until publication of the final rule would apply to all fisheries that take *C. opilio* in 1997.

The industry work group proposed that until further information is available to suggest how best to apportion the *C. opilio* bycatch among the trawl fishery categories, the 1997 *C. opilio* PSC limit be a single bycatch allowance for all the trawl fisheries.

Economic Considerations

Estimates based on a Bering Sea simulation model using 1993 and 1994 fishery data indicate that a trawl fishery closure based on a *C. opilio* PSC limit similar to that proposed in this rule would lead to a slight decrease in the net economic benefits to the Nation over the status quo (the model run assumed a closure area encompassing the entire Bering Sea outside of Zone 1 and a PSC limit of 7.32 million crabs). The decrease in net economic benefits to the Nation, had the assumed closure and PSC limit been effective during those years, would have been approximately $771,000 and approximately $11.5 million using 1993 and 1994 data, respectively. However, given the level of uncertainty inherent in the data and in the model procedures, these predicted changes in net economic benefits to the Nation are probably not great enough to indicate an actual change from the status quo. In 1993 and 1994, between 12 and 14 million crabs were caught as bycatch. Using 1995 or 1996 data when fewer crabs were caught as bycatch, the model would be expected to estimate lower impacts.

Implementation of the proposed measure, along with area closures to protect red king crab under Amendment 37 (61 FR 65985, December 16, 1996), and closures to protect *C. bairdi* upon attainment of a PSC limit under Amendment 41 (62 FR 13839, March 24, 1997) may have cumulative effects on groundfish trawl fisheries. As noted by the Council's Scientific and Statistical Committee, time and area closures cause temporal and spatial shifts in groundfish fishing effort. With each additional bycatch restriction, options for the groundfish trawl fleets are reduced, resulting in effort shifts that could increase the bycatch of other prohibited species. However, these tradeoffs will occur with any protection closure that may be implemented.

Because the proposed minimum and maximum PSC limits for *C. opilio* were developed from historical bycatch data, the groundfish trawl fisheries may not be substantially impacted if the PSC limit can be optimally allocated among trawl fisheries. The potential benefit of setting minimum and maximum PSC limits is that they would allow bycatch levels to fluctuate with crab abundance and would temper annual variability in PSC limits caused by trawl survey abundance estimates.

Proposed Changes to the Final 1997 Specifications of Prohibited Species Bycatch Allowances for the BSAI Trawl Fisheries

As part of the annual BSAI groundfish specification process, the Council recommended PSC allowances for the BSAI trawl fisheries at its December 1996 meeting. NMFS has published in the **Federal Register** the final 1997 BSAI groundfish specifications that include the PSC allowances for the trawl fisheries (62 FR 7168, February 18, 1997). Table 7 of the final 1997 PSC allowances for the BSAI trawl fisheries would be amended by adding *C. opilio* to the list of prohibited species in the first column under the ''Trawl Fisheries'' category; by adding a fifth column titled ''COBLZ'' and the proposed *C. opilio* PSC limit allowance total, 6,760,000, under that heading; and adding footnote 3 indicated below, as follows to add the proposed *C. opilio* PSC limit:

TABLE 7.—FINAL 1997 PROHIBITED SPECIES BYCATCH ALLOWANCES FOR THE BSAI TRAWL FISHERIES

Trawl fisheries	COBLZ [3]
C. opilio, number of animals	6,760,000

[3] The COBLZ, or *C. opilio* Bycatch Limitation Zone, is defined at § 679.21(e)(7)(iv)(B). For 1997 only, the PSC limit for the COBLZ is monitored in Federal reporting areas 513, 514, 521, 523, and 524.

Classification

At this time, NMFS has not determined that the FMP amendment these rules would implement is consistent with the national standards, other provisions of the Magnuson-Stevens Act, and other applicable laws. NMFS, in making that determination, will take into account the data, views, and comments received during the comment period.

This proposed rule has been determined to be not significant for purposes of E.O. 12866.

The Council prepared an IRFA as part of the RIR, which describes the impact this proposed rule would have on small entities, if adopted. Based on the analysis, it was determined that this proposed rule could have a significant economic impact on a substantial number of small entities. Many trawl vessels and processors participating in the BSAI groundfish fishery could be affected by this proposed action. Catcher vessels harvesting groundfish in the BSAI are considered small entities and would be affected by the new *C. opilio* PSC limits. In 1995, 122 trawl catcher vessels harvested BSAI groundfish. Based on the best available information, NMFS anticipates that this proposed rule could result in over a 5 percent reduction in gross revenues for any one of these vessels. Therefore, this proposed rule could have a significant impact on a substantial number of small entities. A copy of this analysis is available from the Council (see **ADDRESSES**).

Consistent with the stated statutory objectives, the IRFA must discuss significant alternatives to the proposed rule, which accomplish the stated objectives of applicable statutes and which minimize any significant economic impact on small entities. The no action alternative would establish no PSC limit for *C. opilio* for all groundfish fisheries, including small entities, which would not accomplish the Council's objective of reducing bycatch, especially if the BSAI allocations of flatfish are increased in the future. The alternative of establishing a fixed limit of *C. opilio* that, upon attainment, would close affected trawl fisheries in Zone 2 unless the optimum limit was specified prior to the fishing season was not selected, because if the optimum limit was not correctly specified in advance certain trawl fisheries (e.g., yellowfin sole fishery) could be adversely impacted. The alternative of setting a fixed limit for Zone 2 of *C. opilio* within a specific percentage of the NMFS bottom trawl survey index was not selected, because Zone 2 does not correspond to crab distribution as does the preferred COBLZ, which was proposed specifically for crab bycatch management. Alternatives that addressed modifying reporting requirements for small entities or the use of performance rather than design standards for small entities were not considered by the Council or in this proposed rule. These alternatives are not relevant to this proposed action. Exemptions for small entities from this proposed action would not be appropriate in that the objective of the

action to further limit *C. opilio* bycatch in the BSAI groundfish fisheries could not be adequately addressed.

List of Subjects in 50 CFR Part 679

Alaska, Fisheries, Reporting and recordkeeping requirements.

Dated: August 7, 1997.

Gary Matlock,

Acting Assistant Administrator for Fisheries, National Marine Fisheries Service.

For the reasons set out in the preamble, 50 CFR part 679 is proposed to be amended as follows:

PART 679—FISHERIES OF THE EXCLUSIVE ECONOMIC ZONE OFF ALASKA

1. The authority citation for 50 CFR part 679 continues to read as follows:

Authority: 16 U.S.C. 773 *et seq.*, 1801 *et seq.*, and 3631 *et seq.*

2. In § 679.2, the definition of ''*C. Opilio* Bycatch Limitation Zone'' and ''U.S.-Russian Boundary'' is added in alphabetical order to read as follows:

§ 679.2 Definitions.

* * * * *

C. Opilio Bycatch Limitation Zone (COBLZ) (see § 679.21(e)(7)(iv)(B)).

* * * * *

U.S.-Russian Boundary means the seaward boundary of Russian waters as defined in Figure 1 of this part.

* * * * *

3. In § 679.21, paragraphs (e)(1)(iii) through (vi) are redesignated as paragraphs (e)(1)(iv) through (vii), respectively, a new paragraph (e)(1)(iii) is added, paragraphs (e)(3)(ii)(A) and (C) and (e)(6) are revised, paragraphs (e)(7)(iv) through (vii) are redesignated as paragraphs (e)(7)(v) through (viii), and a new paragraph (e)(7)(iv) is added to read as follows:

§ 679.21 Prohibited species bycatch management.

* * * * *

(e) * * * (1) * * *

(iii) *C. opilio.* (A) (*Applicable through December 31, 1997*). The PSC limit of *C. opilio* caught by trawl vessels while engaged in directed fishing for groundfish in reporting areas 513, 514, 521, 523, and 524 is 6,760,000 animals.

(B) (*Applicable after December 31, 1997*). The PSC limit of *C. opilio* caught by trawl vessels while engaged in directed fishing for groundfish in the COBLZ will be specified annually by NMFS under paragraph (e)(6) of this section, based on total abundance of *C. opilio* as indicated by the NMFS annual bottom trawl survey using the following criteria:

(*1*) *PSC Limit.* The PSC limit will be 0.1133 percent of the total abundance, unless;

(*2*) *Minimum PSC Limit.* If 0.1133 percent multiplied by the total abundance is less than 4.5 million, then the minimum PSC limit will be 4.5 million animals; or

(*3*) *Maximum PSC Limit.* If 0.1133 percent multiplied by the total abundance is greater than 13 million, then the maximum PSC limit will be 13 million animals.

* * * * *

(3) * * *

(ii) *Red king crab, C. bairdi, C. opilio, and halibut*—(A) *General.* (*1*) Except as provided in paragraph (e)(3)(ii)(A)(*2*) of this section, for vessels engaged in directed fishing for groundfish in the GOA or BSAI, the PSC limits for red king crab, *C. bairdi, C. opilio,* and halibut will be apportioned to the trawl fishery categories defined in paragraphs (e)(3)(iv)(B) through (F) of this section.

(*2*) *Exception.* For 1997, the *C. opilio* PSC limit is a single bycatch allowance for the trawl fishery categories defined in paragraphs (e)(3)(iv)(B) through (F) of this section.

(B) * * *

(C) *Incidental catch in midwater pollock fishery.* Any amount of red king crab, *C. bairdi, C. opilio,* or halibut that is incidentally taken in the midwater pollock fishery as defined in paragraph (e)(3)(iv)(A) of this section will be counted against the bycatch allowances specified for the pollock/Atka mackerel/ ''other species'' category defined in paragraph (e)(3)(iv)(F) of this section.

* * * * *

(6) *Notification*—(i) *General.* NMFS will publish annually in the **Federal Register** the annual red king crab PSC limit and, if applicable, the amount of this PSC limit specified for the RKCSS, the annual *C. bairdi* PSC limit, the annual *C. opilio* PSC limit, the proposed and final bycatch allowances, seasonal apportionments thereof, and the manner in which seasonal apportionments of nontrawl fishery bycatch allowances will be managed, as required under this paragraph (e).

(ii) *Public comment.* Public comment will be accepted by NMFS on the proposed annual red king crab PSC limit and, if applicable, the amount of this PSC limit specified for the RKCSS, the annual *C. bairdi* PSC limit, the annual *C. opilio* PSC limit, the proposed and final bycatch allowances, seasonal apportionments thereof, and the manner in which seasonal apportionments of nontrawl fishery bycatch allowances will be managed, for a period of 30 days from the date of publication in the **Federal Register**.

(7) * * *

(iv) *C. opilio, C. Opilio Bycatch Limitation Zone (COBLZ), closure.* (A) Except as provided in paragraph (e)(7)(i) of this section, if, during the fishing year, the Regional Administrator determines that U.S. fishing vessels participating in any of the fishery categories listed in paragraphs (e)(3)(iv)(B) through (F) of this section will catch the COBLZ bycatch allowance, or seasonal apportionment thereof, of *C. opilio* specified for that fishery category under paragraph (e)(3) of this section, NMFS will publish in the **Federal Register** the closure of the COBLZ, as defined in paragraph (e)(7)(iv)(B) of this section, to directed fishing for each species and/or species group in that fishery category for the remainder of the year or for the remainder of the season.

(B) *C. Opilio Bycatch Limitation Zone.* The *C. Opilio* Bycatch Limitation Zone is an area defined as that portion of the Bering Sea Subarea north of 56°30′ N. lat. that is west of a line connecting the following coordinates in the order listed:

56°30′ N. lat.	165°00′ W. long.
58°00′ N. lat.	165°00′ W. long.
59°30′ N. lat.	170°00′ W. long.

and north along 170°00′ W. long. to its intersection with the U.S.-Russian Boundary.

* * * * *

[FR Doc. 97–21340 Filed 8–12–97; 8:45 am]

BILLING CODE 3510–22–P

Notices

Federal Register
Vol. 62, No. 156
Wednesday, August 13, 1997

This section of the FEDERAL REGISTER contains documents other than rules or proposed rules that are applicable to the public. Notices of hearings and investigations, committee meetings, agency decisions and rulings, delegations of authority, filing of petitions and applications and agency statements of organization and functions are examples of documents appearing in this section.

DEPARTMENT OF AGRICULTURE

Animal and Plant Health Inspection Service

[Docket No. 97–052–1]

Monsanto Co. and Dekalb Genetics Corp.; Receipt of Petition for Determination of Nonregulated Status for Genetically Engineered Corn

AGENCY: Animal and Plant Health Inspection Service, USDA.

ACTION: Notice.

SUMMARY: We are advising the public that the Animal and Plant Health Inspection Service has received a petition from the Monsanto Company and Dekalb Genetics Corporation seeking a determination of nonregulated status for a corn line designated as GA21, which has been genetically engineered for tolerance to the herbicide glyphosate. The petition has been submitted in accordance with our regulations concerning the introduction of certain genetically engineered organisms and products. In accordance with those regulations, we are soliciting public comments on whether this corn line presents a plant pest risk.

DATES: Written comments must be received on or before October 14, 1997.

ADDRESSES: Please send an original and three copies of your comments to Docket No. 97–052–1, Regulatory Analysis and Development, PPD, APHIS, Suite 3C03, 4700 River Road Unit 118, Riverdale, MD 20737–1238. Please state that your comments refer to Docket No. 97–052–1. A copy of the petition and any comments received may be inspected at USDA, room 1141, South Building, 14th Street and Independence Avenue SW., Washington, DC, between 8 a.m. and 4:30 p.m., Monday through Friday, except holidays. Persons wishing access to that room to inspect the petition or comments are asked to call in advance of visiting at (202) 690–2817 to facilitate entry into the reading room.

FOR FURTHER INFORMATION CONTACT: Dr. Ray Dobert, Biotechnology Evaluation, BSS, PPQ, APHIS, Suite 5B05, 4700 River Road Unit 146, Riverdale, MD 20737–1236; (301) 734–8365. To obtain a copy of the petition, contact Ms. Kay Peterson at (301) 734–4885; e-mail: mkpeterson@aphis.usda.gov.

SUPPLEMENTARY INFORMATION: The regulations in 7 CFR part 340, ''Introduction of Organisms and Products Altered or Produced Through Genetic Engineering Which Are Plant Pests or Which There Is Reason to Believe Are Plant Pests,'' regulate, among other things, the introduction (importation, interstate movement, or release into the environment) of organisms and products altered or produced through genetic engineering that are plant pests or that there is reason to believe are plant pests. Such genetically engineered organisms and products are considered ''regulated articles.''

The regulations in § 340.6(a) provide that any person may submit a petition to the Animal and Plant Health Inspection Service (APHIS) seeking a determination that an article should not be regulated under 7 CFR part 340. Paragraphs (b) and (c) of § 340.6 describe the form that a petition for determination of nonregulated status must take and the information that must be included in the petition.

On April 9, 1997, APHIS received a petition (APHIS Petition No. 97–099–01p) from the Monsanto Company of St. Louis, MO, and Dekalb Genetics Corporation of Mystic, CT (Monsanto/Dekalb), requesting a determination of nonregulated status under 7 CFR part 340 for a glyphosate-tolerant corn line designated as GA21. The Monsanto/Dekalb petition states that the subject corn line should not be regulated by APHIS because it does not present a plant pest risk.

As described in the petition, corn line GA21 has been genetically engineered to contain a modified corn 5-enolpyruvylshikimate-3-phosphate synthase (EPSPS) protein, which, when expressed in the plant, confers tolerance to glyphosate, the active ingredient in the herbicide Roundup®. The modified corn EPSPS gene was introduced into the parental inbred (AT) corn line by the particle acceleration method and its expression is controlled in part by the rice actin promoter and intron and the NOS 3′ termination sequence derived from the plant pathogen *Agrobacterium tumefaciens*.

The Monsanto/Dekalb corn line GA21 is currently considered a regulated article under the regulations in 7 CFR part 340 because it contains a gene sequence derived from a plant pathogen. The subject corn line has been evaluated in field trials conducted since 1994 under APHIS notifications. In the process of reviewing the notifications for field trials of this corn line, APHIS determined that the vectors and other elements were disarmed and that the trials, which were conducted under conditions of reproductive and physical containment or isolation, would not present a risk of plant pest introduction or dissemination.

In the Federal Plant Pest Act, as amended (7 U.S.C. 150aa *et seq.*), ''plant pest'' is defined as ''any living stage of: Any insects, mites, nematodes, slugs, snails, protozoa, or other invertebrate animals, bacteria, fungi, other parasitic plants or reproductive parts thereof, viruses, or any organisms similar to or allied with any of the foregoing, or any infectious substances, which can directly or indirectly injure or cause disease or damage in any plants or parts thereof, or any processed, manufactured or other products of plants.'' APHIS views this definition very broadly. The definition covers direct or indirect injury, disease, or damage not just to agricultural crops, but also to plants in general, for example, native species, as well as to organisms that may be beneficial to plants, for example, honeybees, rhizobia, etc.

The U.S. Environmental Protection Agency (EPA) is responsible for the regulation of pesticides under the Federal Insecticide, Fungicide, and Rodenticide Act (FIFRA), as amended (7 U.S.C. 136 *et seq.*). FIFRA requires that all pesticides, including herbicides, be registered prior to distribution or sale, unless exempt by EPA regulation. In cases in which genetically modified plants allow for a new or different use pattern for the herbicide, EPA must approve the new or different use. Accordingly, Monsanto submitted to the EPA an application to register Roundup® herbicide for use over-the-top on glyphosate-tolerant corn, and EPA has approved a label for such use.

When the use of the herbicide on the genetically modified plant would result in an increase in the residues of the herbicide in a food or feed crop for which the herbicide is currently registered, or in new residues in a crop for which the herbicide is not currently registered, establishment of a new tolerance or a revision of the existing tolerance would be required. Residue tolerances for pesticides are established by the EPA under the Federal Food, Drug and Cosmetic Act (FFDCA), as amended (21 U.S.C. 301 *et seq.*), and the Food and Drug Administration (FDA) enforces tolerances set by the EPA under the FFDCA.

The FDA published a statement of policy on foods derived from new plant varieties in the **Federal Register** on May 29, 1992 (57 FR 22984–23005). The FDA statement of policy includes a discussion of the FDA's authority for ensuring food safety under the FFDCA, and provides guidance to industry on the scientific considerations associated with the development of foods derived from new plant varieties, including those plants developed through the techniques of genetic engineering. Monsanto has begun consultation with the FDA on the subject corn line.

In accordance with § 340.6(d) of the regulations, we are publishing this notice to inform the public that APHIS will accept written comments regarding the Petition for Determination of Nonregulated Status from any interested person for a period of 60 days from the date of this notice. The petition and any comments received are available for public review, and copies of the petition may be ordered (see the **ADDRESSES** section of this notice).

After the comment period closes, APHIS will review the data submitted by the petitioners, all written comments received during the comment period, and any other relevant information. Based on the available information, APHIS will furnish a response to the petitioners, either approving the petition in whole or in part, or denying the petition. APHIS will then publish a notice in the **Federal Register** announcing the regulatory status of the Monsanto/Dekalb corn line GA21 and the availability of APHIS' written decision.

Authority: 7 U.S.C. 150aa–150jj, 151–167, and 1622n; 31 U.S.C. 9701; 7 CFR 2.22, 2.80, and 371.2(c).

Done in Washington, DC, this 6th day of August 1997.

Terry L. Medley,

Administrator, Animal and Plant Health Inspection Service.

[FR Doc. 97–21371 Filed 8–12–97; 8:45 am]

BILLING CODE 3410–34–P

DEPARTMENT OF AGRICULTURE

Foreign Agricultural Service

Assessment of Fees for Dairy Import Licenses

AGENCY: Foreign Agricultural Service, USDA.

ACTION: Notice of the fee for dairy import licenses for the 1998 quota year.

SUMMARY: This notice announces that the fee to be charged for the 1998 tariff-rate quota year for each license issued to a person or firm by the Department of Agriculture authorizing the importation of certain dairy articles which are subject to tariff-rate quotas set forth in the Harmonized Tariff Schedule of the United States (HTS) will be $170.00 per license.

EFFECTIVE DATE: January 1, 1998.

FOR FURTHER INFORMATION CONTACT: Richard P. Warsack, Dairy Import Quota Manager, Import Policies and Programs Division, STOP 1021, U.S. Department of Agriculture, 1400 Independence Avenue, SW., Washington, DC 20250–1021 or telephone at (202) 720–9439.

SUPPLEMENTARY INFORMATION: The Import Licensing Regulation promulgated by the Department of Agriculture and codified at 7 CFR 6.20–6.36 provides for the issuance of licenses to import certain dairy articles which are subject to tariff-rate quotas (TRQs) set forth in the HTS. Those dairy articles may only be entered into the United States at the in-quota TRQ tariff rates by or for the account of a person or firm to whom such licenses have been issued and only in accordance with the terms and conditions of the Regulation.

Licenses are issued on a calendar year basis, and each license authorizes the license holder to import a specified quantity and type of dairy article from a specified country of origin. The use of licenses by the license holder to import dairy articles is monitored by the Dairy Import Quota Manager, Import Licensing Group, Import Policies and Programs Division, Foreign Agricultural Service, U.S. Department of Agriculture and the U.S. Customs Service.

The Regulation at 7 CFR 6.33(a) provides that a fee will be charged for each license issued to a person or firm by the Licensing Authority in order to reimburse the Department of Agriculture for the costs of administering the licensing system under this Regulation.

The Regulation at 7 CFR 6.33(a) also provides that the Licensing Authority will announce the annual fee for each license and that such fee will be set out in a notice to be published in the **Federal Register**. Accordingly, this notice sets out the fee for the licenses to be issued for the 1998 calendar year.

The total cost to the Department of Agriculture of administering the licensing system during 1997 has been determined to be $442,538 and the estimated number of licenses expected to be issued is 2,601. Of the total cost, $276,872 represent staff and supervisory costs directly to administering the licensing system during 1997; $50,320 represents the total computer costs to monitor and issue import licenses during 1997; and $115,346 represents other miscellaneous costs, including travel, postage, publications, forms, and an ADP system contractor.

Accordingly, notice is hereby given that the fee for each license issued to a person or firm for the 1998 calendar year, in accordance with 7 CFR 6.33, will be $170.00 per license.

Issued at Washington, D.C. the 11th day of August, 1997.

Richard P. Warsack,

Licensing Authority.

[FR Doc. 97–21335 Filed 8–12–97; 8:45 am]

BILLING CODE 3410–10–M

DEPARTMENT OF AGRICULTURE

Forest Service

Range Standards and Guidelines to Amend the Land and Resource Management Plans of the Eldorado and Tahoe National Forests

AGENCY: Forest Service, USDA.

ACTION: Notice; intent to prepare environmental impact statement.

SUMMARY: The USDA Forest Service will prepare an environmental impact statement (EIS) for amendments to the Forest Land and Resource Management Plans (LRMP) for the Eldorado National Forest and the Tahoe National Forest in accordance with the requirements of 36 CFR 219.19. The amendments will modify existing LRMP grazing standards and guidelines for management with the objective to maintain and improve rangeland ecosystems on both Forests.

DATES: Comments concerning the analysis should be received in writing by September 29, 1997.

ADDRESSES: Send written comments to Attn: RANGE AMENDMENT, c/o Susan A. Rodman, ID Team Leader, Land Management Planning, Eldorado National Forest, 100 Forni Road, Placerville, CA 95667.

FOR FURTHER INFORMATION CONTACT: Susan A. Rodman, Range Amendment ID Team Leader, Land Management Planning, (916) 621–5298.

SUPPLEMENTARY INFORMATION: The environmental impact statement will amend existing standards and guidelines for managing grazing by domestic livestock within the boundaries of the Eldorado and Tahoe National Forests in accordance with the requirements of 36 CFR 219.19, amend existing term grazing permits, and provide a framework for site-specific NEPA analysis of individual allotments.

The Eldorado and Tahoe National Forests manage livestock grazing on approximately 1,043,000 acres of public rangelands, with an average total production of 26,000 animal unit months (AUMs) of livestock grazing.

On November 10, 1994, the Regional Forester for the Pacific Southwest Region directed all Sierran Forests in the region to evaluate the range standards and guidelines (S&Gs) contained in their LRMPs, and to amend the LRMPs as to provide more appropriate standards and guidelines if needed. A review of the range S&Gs in both the Eldorado and Tahoe Forest LRMPs indicated to the supervisors of each Forest that an amendment to the Forest LRMPs is necessary to provide clear, specific and measurable S&Gs for effective ecosystem management of rangelands on the two Forests. This amendment to the LRMPs will provide direction to integrate ecosystem management with the management of livestock grazing in order to provide for the health of riparian and upland ecosystem types in conjunction with other S&Gs found in the LRMPs. The objectives of the grazing amendment to the LRMPs are to:

(1) Develop ecological goals to maintain or improve rangelands in both upland areas (out of a direct water influence zone) and riparian areas (streamside and lakeside zones, moist areas).

(2) Provide S&Gs that clarify direction of managing livestock. S&Gs will provide direction for managing livestock impacts to the major components of the ecosystem: soil, water, and vegetation.

(3) Provide direction for livestock management so that livestock use of woody riparian vegetation (including willows), threatened and endangered (T&E) species habitats, stream banks and lakeshores, aquatic species habitats, and non-T&E wildlife habitats maintains or improves those areas.

(4) Develop a repeatable process with measurable environmental indicators to determine existing ecological conditions and track changes in ecological conditions. Management direction is then based on that ecological condition and responds to the different conditions and trends in soil, water, and vegetation.

After the LRMP amendment is completed, these S&Gs will be used to determine how grazing allotments will be managed. It is expected that grazing permits on both Forests will need to be modified to implement the new S&Gs. Because the Eldorado and Tahoe National Forests are similar, amendments to LRMP standards and guidelines will be the same for both Forests. The current S&Gs will remain in effect until the amendment is complete and adopted as a result of this current process.

The Interdisciplinary Team (IDT) developed a Proposed Action based on issues gathered from members of the public, Forest Service personnel, and other agencies. The Proposed Action (PA) was released for public comment in October 1996, and the initial comment period was extended to January 10, 1997 at the request of several groups and members of the public. Based on scoping comments received on the PA, the Forest Supervisors decided to prepare an Environmental Impact Statement.

Preliminary issues connected with the proposal to amend LRMP grazing S&Gs identified through scoping include:

(1) Riparian areas are ecologically important and complex; environmental indicators are needed that are representative of this complexity. These indicators must be measurable and repeatable over time to enable the Forest Service to monitor and assess riparian and aquatic ecosystem health.

(2) The level of plant utilization by livestock may not maintain or improve the ecological health of the Forests' rangelands.

(3) Information gathered during monitoring to detect change may not be sensitive enough to provide the necessary information to prevent irreversible damage and to determine whether ecological health is being maintained or restored.

(4) Grazing by livestock can decrease the foraging habitat of voles needed as prey by great gray owls.

(5) Livestock grazing can decrease browse and hiding cover needed by deer along migration routes and in both fawning areas and winter ranges.

(6) Willow flycatcher nesting success can be negatively impacted by livestock grazing, movement, and bedding in willow clumps used for nesting by the willow flycatcher.

(7) Additional standards and guidelines may not be economically viable for permittees to implement, which may lead to the sale of ranchlands in the foothills for housing developments.

(8) Permittees do not want to be penalized for resource damage caused by other users.

(9) Fences are expensive to build and maintain, and they are barriers to wildlife and other forest users.

Alternatives that may be considered include continued use of the standards and guidelines adopted in the Eldorado and Tahoe Forests' LRMPS; and revised S&Gs to address vegetative species composition, woody riparian vegetation, aquatic resources, soil condition, and habitat for willow flycatcher, deer, and great grey owl. These alternatives may include management direction dependent on specific ecological indicators and measurements from those ecological indicators. Additional alternatives may also include landscape-level strategies for wildlife habitat and aquatic resources. An alternative which discontinues livestock grazing may be considered also.

The IDT is composed of personnel from both Forests with program responsibilities for range, wildlife, ecology, botany, hydrology, and aquatic resources. The IDT has been directed to develop alternatives to amend the standards and guidelines for both Forests' LRMPs.

Integration of grazing standards and guidelines with other provisions of the affected LRMPs will take place through subsequent allotment management plans required for each allotment as part of the normal LRMP implementation and monitoring process.

Written comments from the public should be submitted as indicated at the beginning of this notice. Comments would be most useful if sent by the date specified and if they clearly address the issues and alternatives related to the proposed action—amending grazing standards and guidelines for the Eldorado and Tahoe National Forests.

The comment period on the draft EIS will be 90 days from the date the Environmental Protection Agency publishes the notice of availability in the **Federal Register**. Public meetings used as a method of public involvement during preparation and review of the draft EIS will be announced in newspapers of general circulation in the

geographic area of such meetings well in advance of scheduled dates.

The Forest Service believes, at this early stage, it is important to give reviewers notice of several court rulings related to public participation in the environmental review process. First, reviewers of draft environmental impact statements must structure their participation in the environmental review of the proposal so that it is meaningful and alerts an agency to the reviewer's position and contentions. *Vermont Yankee Nuclear Power Corp.* v. *NRDC*, 435 U.S. 519, 553 (1978). Also, environmental objections that could be raised at the draft environmental impact statement stage but that are not raised until after completion of the final environmental impact statement may be waived or dismissed by the courts. *City of Angoon* v. *Hodel*, 803 F.2d 1016, 1022 (9th Cir. 1986) and *Wisconsin Heritages, Inc.* v. *Harris*, 490 F. Supp. 1334, 1338 (E.D. Wis. 1980). Because of these court rulings, it is very important that those interested in this proposed action participate by the close of the 90-day comment period so that substantive comments and objections are made available to the Forest Service at a time when it can meaningfully consider them and respond to them in the final environmental impact statement.

To assist the Forest Service in identifying and considering issues and concerns on the proposed action, comments on the draft environmental impact statement should be as specific as possible. It is also helpful if comments refer to specific pages or chapters of the draft statement. Comments may also address the adequacy of the draft EIS or the merits of the alternatives formulated and discussed in the statement. Reviewers may wish to refer to the Council on Environmental Quality Regulations for implementing the procedural provisions of the National Environmental Policy Act at 40 CFR 1503.3 in addressing these points.

The responsible officials for this environmental impact statement and decision are John H. Skinner, Forest Supervisor, Tahoe National Forest, P.O. Box 6003, Nevada City, CA 95959–6003 and John Phipps, Forest Supervisor, Eldorado National Forest, 100 Forni Road, Placerville, CA 95667.

A draft environmental impact statement is expected to be available for agency and public review by November 1997, and a final environmental impact statement should be available by March 1998.

Dated: July 30, 1997.

John Phipps,

Forest Supervisor, Eldorado National Forest.

Dated: August 1, 1997.

John H. Skinner,

Forest Supervisor, Tahoe National Forest.

[FR Doc. 97–21345 Filed 8–12–97; 8:45 am]

BILLING CODE 3410–11–M

DEPARTMENT OF AGRICULTURE

Sunshine Act Meeting

AGENCY: Rural Telephone Bank, USDA.

ACTION: Staff Briefing for the Board of Directors.

TIME AND DATE: 2 p.m., Thursday, August 21, 1997.

PLACE: Room 0204, South Building, Department of Agriculture, 1400 Independence Avenue, SW., Washington, DC.

STATUS: Open.

MATTERS TO BE DISCUSSED: General discussion involving FCC rulemaking affecting the Bank and RUS telecommunications programs; proposed budget for FY 1998; retirement of Class A stock in FY 1997; annual dividend rate for Class C stock; reserve for loan losses; conversion of Class B stock to Class C stock upon partial repayment of Bank loans; directors' liability insurance; and final rules 7 CFR parts 1610 and 1735.

Action: Regular Meeting of the Board of Directors.

Time and Date: 9 a.m., Friday, August 22, 1997.

Place; Room 104A, South Building, Department of Agriculture, 1400 Independence Avenue, SW., Washington, DC.

Status: Open.

MATTERS TO BE CONSIDERED: The following matters have been placed on the agenda for the Board of Directors meeting:

1. Call to Order.
2. Action on Minutes of May 15, 1997, Board meeting.
3. Report on loans approved in third quarter FY 1997.
4. Report on requests for waiver of prepayment premiums in third quarter FY 1997.
5. Summary of financial activity for third quarter FY 1997.
6. Consideration of resolution to retire Class A stock in FY 1997.
7. Consideration of resolution to set annual Class C stock dividend rate.
8. Consideration of the Bank Board's annual report for FY 1996.
9. Adjournment.

CONTACT PERSON FOR MORE INFORMATION: Robert Peters, Assistant Governor, Rural Telephone Bank, (202) 720–9554.

Dated: August 8, 1997.

Wally Beyer,

Governor, Rural Telephone Bank.

[FR Doc. 97–21595 Filed 8–11–97; 3:58 pm]

BILLING CODE 3410–15–P

DEPARTMENT OF COMMERCE

Submission For OMB Review; Comment Request

DOC has submitted to the Office of Management and Budget (OMB) for clearance the following proposal for collection of information under the provisions of the Paperwork Reduction Act (44 U.S.C. chapter 35).

Agency: Bureau of the Census.

Title: Current Industrial Reports Program—Wave I (Mandatory).

Form Number(s): Total of 23 individual CIR reports.

Agency Approval Number: 0607–0392.

Type of Request: Revision of a currently approved collection.

Burden: 18,252 hours.

Number of Respondents: 14,650.

Avg Hours Per Response: 1 hour 15 minutes.

Needs and Uses: The Current Industrial Reports (CIR) program is a series of monthly, quarterly, and annual surveys which provide key measures of production, shipments, and/or inventories on a national basis for selected manufactured products. Government agencies, business firms, trade associations, and private research and consulting organizations use these data to make trade policy, production, and investment decisions.

For clearance purposes, the approximately 72 CIR surveys are divided into ''waves.'' Each wave has an associated voluntary and mandatory clearance package, making 6 separate clearances. Each year, one wave (2 clearance packages) is submitted for review.

In this request, we are moving 3 CIR reports (Air Conditioning & Refrigeration; Steel Mill; and Computer and Office Equipment) from other waves into this wave because of changes in survey content and moving 3 others (Confectionery; Coin Operated Vending Machines; and Electric Lighting Fixtures) into this wave because of a change in reporting status. These 3 annual reports, normally conducted as voluntary, are being done on a mandatory basis this year in conjunction with the economic

censuses. Additionally, a CIR report on Fluid Power Products (intended for conversion from mandatory to voluntary this year) which is already contained in this wave will continue to be conducted on a mandatory basis this year in conjunction with the economic censuses.

These planned changes were not made public in our presubmission **Federal Register** notice published February 26, 1997 announcing our plans to submit this request. The changes are non-controversial and will not result in any overall increase in reporting burden.

Affected Public: Businesses or other for-profit organizations.

Frequency: This request contains monthly, quarterly, and annual counterpart reports.

Respondent's Obligation: Mandatory.

Legal Authority: Title 13 USC, Sections 61, 131, 182, 224, and 225.

OMB Desk Officer: Jerry Coffey, (202) 395–7314.

Copies of the above information collection proposal can be obtained by calling or writing Linda Engelmeier, DOC Forms Clearance Officer, (202) 482–3272, Department of Commerce, room 5327, 14th and Constitution Avenue, NW, Washington, DC 20230.

Written comments and recommendations for the proposed information collection should be sent within 30 days of publication of this notice to Jerry Coffey, OMB Desk Officer, room 10201, New Executive Office Building, Washington, DC 20503.

Dated: August 7, 1997.

Linda Engelmeier,

Departmental Forms Clearance Officer, Office of Management and Organization.

[FR Doc. 97–21387 Filed 8–12–97; 8:45 am]

BILLING CODE 3510–07–P

DEPARTMENT OF COMMERCE

Bureau of the Census

Current Population Survey—Annual Demographic Survey for March 1998

ACTION: Proposed collection; comment request.

SUMMARY: The Department of Commerce, as part of its continuing effort to reduce paperwork and respondent burden, invites the general public and other Federal agencies to take this opportunity to comment on proposed and/or continuing information collections, as required by the Paperwork Reduction Act of 1995, Pub. L. 104–13 (44 U.S.C. 3506(c)(2)(A)).

DATES: Written comments must be submitted on or before October 14, 1997.

ADDRESSES: Direct all written comments to Linda Engelmeier, Departmental Forms Clearance Officer, Department of Commerce, Room 5327, 14th and Constitution Avenue, NW., Washington, DC 20230.

FOR FURTHER INFORMATION CONTACT: Requests for additional information or copies of the information collection instrument(s) and instructions should be directed to Bonnie Tarsia, Bureau of the Census, FOB 3, Room 3340, Washington, DC 20233–8400, and (301) 457–3806.

SUPPLEMENTARY INFORMATION:

I. Abstract

The Census Bureau will conduct the Annual Demographic Survey (ADS) in conjunction with the March 1998 Current Population Survey (CPS). The Census Bureau has conducted this supplement annually for over 50 years. The Census Bureau, the Bureau of Labor Statistics, and the Department of Health and Human Services sponsor this supplement.

In the ADS we collect information on work experience, personal income, noncash benefits, expanded race items and migration.

The work experience items in the ADS provide a unique measure of the dynamic nature of the labor force as viewed over a one-year period. These items produce statistics that show movements in and out of the labor force by measuring the number of periods of unemployment experienced by persons, the number of different employers worked for during the year, the principal reasons for unemployment, and part-/full-time attachment to the labor force. We can make indirect measurements of discouraged workers and others with a casual attachment to the labor market.

The income data from the ADS are used by social planners, economists, Government officials, and market researchers to gauge the economic well-being of the Nation as a whole, and selected population groups of interest. Government planners and researchers use these data to monitor and evaluate the effectiveness of various assistance programs. Market researchers use these data to identify and isolate potential customers. Social planners use these data to forecast economic conditions and to identify special groups that seem to be especially sensitive to economic fluctuations. Economists use March data to determine the effects of various economic forces, such as inflation, recession, recovery, etc., and their differential effects on various population groups.

A prime statistic of interest is the classification of persons as being in poverty and how this measurement has changed over time for various groups. Researchers evaluate March income data not only to determine poverty levels, but also to determine whether Government programs are reaching eligible households.

The March 1998 supplement instrument will consist of the same items that were included in the March 1997 instrument, with the following changes:

A. We are removing the Item Q49a1 screener from the instrument. Based on the results of the March 1997 CPS, this item unexpectedly reduced the amount of ''Other self-employment,'' and ''Other farm'' income.

B. We will remove references to ''Aid to Families With Dependent Children'' and ''Aid to Dependent Children'' from the instrument. This will be done due to the recent welfare reform changes in programs.

C. We are conducting research to develop a few questions that will address participation in new programs generated by welfare reform.

D. We are adding a question to the current migration series. This question will ask the reasons for moving.

II. Method of Collection

The ADS is conducted at the same time as the Basic CPS by personal visits and telephone interviews, using Computer-Assisted Personal Interviewing and Computer-Assisted Telephone Interviewing.

III. Data

OMB Number: 0607–0354.

Form Number: None. We conduct all interviewing on computers.

Type of Review: Regular.

Affected Public: Individuals or households.

Estimated Number of Respondents: 52,000 per month.

Estimated Time Per Response: 25 minutes.

Estimated Total Annual Burden Hours: 21,666.

Estimated Total Annual Cost: There are no costs to the respondents other than their time to answer the CPS questions.

Respondent's Obligation: Voluntary.

Legal Authority: Title 13, United States Code, Section 182; and Title 29, United States Code, Sections 1–9.

IV. Request for Comments

Comments are invited on: (a) Whether the proposed collection of information is necessary for the proper performance of the functions of the agency, including whether the information shall have practical utility; (b) the accuracy of the agency's estimate of the burden (including hours and cost) of the proposed collection of information; (c) ways to enhance the quality, utility, and clarity of the information to be collected; and (d) ways to minimize the burden of the collection of information on respondents, including through the use of automated collection techniques or other forms of information technology.

Comments submitted in response to this notice will be summarized and/or included in the request for OMB approval of this information collection; they also will become a matter of public record.

Dated: August 7, 1997.

Linda Engelmeier,

Departmental Forms Clearance Officer, Office of Management and Organization.

[FR Doc. 97–21341 Filed 8–12–97; 8:45 am]

BILLING CODE 3510–07–P

DEPARTMENT OF COMMERCE

International Trade Administration

Determination Not to Revoke Antidumping Duty Orders and Findings Nor to Terminate Suspended Investigations

AGENCY: Import Administration, International Trade Administration, Department of Commerce.

ACTION: Determination not to revoke antidumping duty orders and findings nor to terminate suspended investigations.

SUMMARY: The Department of Commerce is notifying the public of its determination not to revoke the antidumping duty orders and findings nor to terminate the suspended investigations listed below.

EFFECTIVE DATE: August 13, 1997.

FOR FURTHER INFORMATION CONTACT: Michael Panfeld or the analyst listed under Antidumping Proceeding at: Import Administration, International Trade Administration, U.S. Department of Commerce, 14th Street & Constitution Avenue, N.W., Washington, D.C. 20230.

SUPPLEMENTARY INFORMATION: The Department of Commerce (the Department) may revoke an antidumping duty order or finding or terminate a suspended investigation, pursuant to 19 CFR § 353.25(d)(4)(iii), if no interested party has requested an administrative review for four consecutive annual anniversary months and no domestic interested party objects to the revocation or requests an administrative review.

We had not received a request to conduct an administrative review for the most recent four consecutive annual anniversary months. Therefore, pursuant to § 353.25(d)(4)(i) of the Department's regulations, on April 7, 1997, May 9, 1997, and June 17, 1997, we published in the **Federal Register** a notice of intent to revoke these antidumping duty orders and findings and to terminate the suspended investigations and served written notice of the intent to each domestic interested party on the Department's service list in each case. Within the specified time frame, we received objections from domestic interested parties to our intent to revoke these antidumping duty orders and findings and to terminate the suspended investigations. Therefore, because domestic interested parties objected to our intent to revoke or terminate, we no longer intend to revoke these antidumping duty orders and findings or to terminate the suspended investigations.

Antidumping Proceeding

A–357–802
Argentina
Rectangular Carbon Steel Tubing
Objection Date: May 29, 1997
Objector: Hannibal Industries, Inc.
Contact: Tom Killiam at (202) 482–2704

A–423–077
Belgium
Sugar
Objection Date: June 26, 1997; June 30, 1997
Objector: United States Cane Sugar Refiners' Association, et al; Florida Sugar Marketing and Terminal Association, Inc.
Contact: Lyn Johnson at (202) 482–5287

A–351–503
Brazil
Iron Construction Castings
Objection Date: May 14, 1997
Objector: East Jordan Iron Works, Inc.
Contact: Hermes Pinilla at (202) 482–3477

A–122–085
Canada
Sugar and Syrups
Objection Date: April 14, 1997
Objector: American Sugar Cane League, et al
Contact: David Dirstine at (202) 482–4033

A–427–078
France
Sugar
Objection Date: June 30, 1997
Objector: Florida Sugar Marketing and Terminal Association, Inc.
Contact: Lyn Johnson at (202) 482–5287

A–428–802
Germany
Industrial Belts and Components and Parts Thereof, Whether Cured or Uncured, Except Synchronous & V belts
Objection Date: June 30, 1997
Objector: Gates Rubber Company and Chemical Products Corporation
Contact: Ron Trentham at (202) 482–4793

A–428–082
Germany
Sugar
Objection Date: June 26, 1997; June 30, 1997
Objector: United States Cane Sugar Refiners' Association, et al; Florida Sugar Marketing and Terminal Association, Inc.
Contact: Mark Ross at (202) 482–4852

A–484–801
Greece
Electrolytic Manganese Dioxide
Objection Date: April 15, 1997; April 30, 1997
Objector: Chemetals, Inc.; Kerr-McGee Chemical Corporation
Contact: Thomas Shauer at (202) 482–4852

A–475–802
Italy
Industrial Belts and Components and Parts Thereof, Whether Cured or Uncured
Objection Date: June 30, 1997; June 30, 1997
Objector: Gates Rubber Company; Mectrol Corporation
Contact: Ron Trentham at (202) 482–4793

A–588–066
Japan
Impression Fabric
Objection Date: May 29, 1997
Objector: Bomont Industries
Contact: Lyn Johnson at (202) 482–5287

A–588–706
Japan
Nitrile Rubber
Objection Date: June 17, 1997
Objector: Zeon Chemicals Inc.
Contact: Sheila Forbes at (202) 482–

5253

A–779–602
Kenya
Standard Carnations
Objection Date: April 30, 1997
Objector: Floral Trade Council
Contact: Michael Panfeld at (202) 482–0168

A–559–803
Singapore
V-Belts
Objection Date: June 30, 1997
Objector: Gates Corporation
Contact: Zev Primor at (202) 482–4114

A–580–507
South Korea
Malleable Cast Iron Pipe Fittings, Other than Grooved
Objection Date: May 28, 1997
Objector: Grinnell Corporation, Ward Manufacturing, Inc.
Contact: Thomas Schauer at (202) 482–4852

A–583–080
Taiwan
Carbon Steel Plate
Objection Date: June 30, 1997
Objector: Bethlehem Steel Corporation and U.S. Steel Group
Contact: Michael Heaney at (202) 482–4475

A–583–505
Taiwan
Oil Country Tubular Goods
Objection Date: June 25, 1997
Objector: North Star Steel Company
Contact: Michael Heaney at (202) 482–4475

A–583–507
Taiwan
Malleable Cast Iron Pipe Fittings, Other Than Grooved
Objection Date: May 28, 1997
Objector: Grinnell Corporation and Ward Manufacturing Inc.
Contact: Laurel LaCivita at (202) 482–4740

Dated: August 4, 1997.

Richard W. Moreland

Acting Deputy Assistant Secretary for AD/CVD Enforcement.

[FR Doc. 97–21428 Filed 8–12–97; 8:45 am]

BILLING CODE 3510–DS–P

DEPARTMENT OF COMMERCE

International Trade Administration

[A–301–602]

Certain Fresh Cut Flowers From Colombia, Antidumping Duty Administrative Review; Time Limit

AGENCY: Import Administration, International Trade Administration, Department of Commerce

ACTION: Notice of extension of time limit.

SUMMARY: The Department of Commerce (the Department) is extending the time limit for the final results of the ninth review of the antidumping duty order on certain fresh cut flowers from Colombia. The review covers 351 producers and/or exporters of the subject merchandise to the United States, and the period March 1, 1995 through February 29, 1996.

EFFECTIVE DATE: August 13, 1997.

FOR FURTHER INFORMATION CONTACT: Roy Malmrose or Beth Graham, Import Administration, International Trade Administration, U.S. Department of Commerce, 14th Street and Constitution Avenue, N.W., Washington, D.C. 20230; telephone (202) 482–5414 or 482–4105, respectively.

SUPPLEMENTARY INFORMATION: The Department initiated this administrative review on April 22, 1996 (61 FR 17685). On August 21, 1996, we extended the deadline for these preliminary results until March 31, 1997 (61 FR 43229). On April 8, 1997, we published in the **Federal Register** the preliminary results of this administrative review (67 FR 16772).

Because it is not practicable to complete this review within the time limits mandated by section 751(a)(3)(A) of the Tariff Act of 1930, as amended by the Uruguay Round Agreements Act, the Department is extending the time limit for completion of the final results until October 6, 1997.

This extension is in accordance with the section 751(a)(3)(A) of the Tariff Act of 1930, as amended.

Dated: August 6, 1997.

Robert S. LaRussa,

Assistant Secretary for Import Administration.

[FR Doc. 97–21427 Filed 8–12–97; 8:45 am]

BILLING CODE 3510–DS–P

DEPARTMENT OF COMMERCE

International Trade Administration

Export Trade Certificate of Review

ACTION: Notice of application.

SUMMARY: The Office of Export Trading Company Affairs (''OETCA''), International Trade Administration, Department of Commerce, has received an application for an Export Trade Certificate of Review. This notice summarizes the conduct for which certification is sought and requests comments relevant to whether the Certificate should be issued.

FOR FURTHER INFORMATION CONTACT: W. Dawn Busby, Director, Office of Export Trading Company Affairs, International Trade Administration, (202) 482–5131. This is not a toll-free number.

SUPPLEMENTARY INFORMATION: Title III of the Export Trading Company Act of 1982 (15 U.S.C. 4001–21) authorizes the Secretary of Commerce to issue Export Trade Certificates of Review. A Certificate of Review protects the holder and the members identified in the Certificate from state and federal government antitrust actions and from private, treble damage antitrust actions for the export conduct specified in the Certificate and carried out in compliance with its terms and conditions. Section 302(b)(1) of the Act and 15 CFR 325.6(a) require the Secretary to publish a notice in the **Federal Register** identifying the applicant and summarizing its proposed export conduct.

Request for Public Comments

Interested parties may submit written comments relevant to the determination whether a Certificate should be issued. If the comments include any privileged or confidential business information, it must be clearly marked and a nonconfidential version of the comments (identified as such) should be included. Any comments not marked privileged or confidential business information will be deemed to be nonconfidential. An original and five copies, plus two copies of the nonconfidential version, should be submitted no later than 20 days after the date of this notice to: Office of Export Trading Company Affairs, International Trade Administration, Department of Commerce, Room 1800H, Washington, D.C. 20230. Information submitted by any person is exempt from disclosure under the Freedom of Information Act (5 U.S.C. 552). However, nonconfidential versions of the comments will be made available to the applicant if necessary for determining whether or not to issue the certificate. Comments should refer to this application as ''Export Trade Certificate of Review, application number 97–00002.'' A summary of the application follows.

Summary of the Application

Applicant: Goff-Chem, Inc., 100 Hano Street, Suite 19, Boston, Massachusetts 02134.

Contact: Benjamin F. Goff, President.

Telephone: (617) 254–7005.

Application No.: 97–00002.

Date Deemed Submitted: August 4, 1997.

Members (in addition to applicant): None.

Goff-Chem, Inc. seeks a Certificate to cover the following specific Export Trade, Export Markets, and Export Trade Activities and Methods of Operations.

Export Trade

1. *Products:* All products.
2. *Services:* All services.
3. *Technology Rights:* Technology Rights, including, but not limited to, patents, trademarks, copyrights and trade secrets that relate to Products and Services.
4. *Export Trade Facilitation Services (as They Relate to the Export of Products, Services and Technology Rights):* Export Trade Facilitation Services, including, but not limited to: professional services in the areas of government relations and assistance with state and federal export programs; foreign trade and business protocol; consulting; market research and analysis; collection of information on trade opportunities; marketing; negotiations; joint ventures; shipping and export management; export licensing; advertising; documentation and services related to compliance with customs requirements; insurance and financing; bonding; warehousing; export trade promotion; trade show exhibitions; organizational development; management and labor strategies; transfer of technology; transportation; and facilitating the formation of shippers' associations.

Export Markets

The Export Markets include all parts of the world except the United States (the fifty states of the United States, the District of Columbia, the Commonwealth of Puerto Rico, the Virgin Islands, American Samoa, Guam, the Commonwealth of the Northern Mariana Islands, and the Trust Territory of the Pacific Islands).

Export Trade Activities and Methods of Operation

Goff-Chem, Inc. may:

1. Provide and/or arrange for the provision of Export Trade Facilitation Services;
2. Engage in promotion and marketing activities and collect and distribute information on trade opportunities in the Export Market;
3. Enter into exclusive and/or non-exclusive agreements with distributors, foreign buyers, and/or sales representatives in Export Markets;
4. Enter into exclusive or non-exclusive licensing, and/or sales agreements with Suppliers, Export Intermediaries, or other persons for the transfer of title to Products, Services, and/or Technology Rights in Export Markets;
5. Enter into exclusive or non-exclusive pricing and/or consignment agreements for the sale and shipment of Products and Services to Export Markets;
6. Allocate the sales, export orders and/or divide Export Markets, among Suppliers, Export Intermediaries, or other persons for the sale, licensing and/or transfer of title to Products, Services, and/or Technology Rights;
7. Enter into exclusive or non-exclusive price and territorial agreements with U.S. suppliers;
8. Represent U.S. suppliers at trade shows and solicit agents and distributors for their products in the territory;
9. Enter into exclusive or non-exclusive agreements for the pooling of tangible property and other resources, the tying of Products and Services, the setting of prices, and/or the distribution, shipping or handling of Products or Services in the Export Markets; and
10. Enter into agreements to invest in overseas warehouses for the purpose of storing exported Products until transferred to the foreign purchaser, or to invest in overseas facilities for the purpose of making minor product or packaging modifications necessary to insure compatibility of the Product with the requirements of the foreign market.

Definitions

1. ''Export Intermediary'' means a person who acts as a distributor, sales representative, sales or marketing agent, or broker, or who performs similar functions, including providing or arranging for the provision of Export Trade Facilitation Services.

2. ''Supplier'' means a person who produces, provides, or sells a Product and/or Service.

Dated: August 7, 1997.

W. Dawn Busby,

Director, Office of Export Trading Company Affairs.

[FR Doc. 97–21332 Filed 8–12–97; 8:45 am]

BILLING CODE 3510–DR–F

DEPARTMENT OF COMMERCE

National Institute of Standards and Technology

Energy-Related Invention Evaluation Request Form—Office of Technology Innovation, Energy-Related Inventions Program

ACTION: Proposed collection; comment request.

SUMMARY: The Department of Commerce, as part of its continuing effort to reduce paperwork and respondent burden, invites the general public and other Federal agencies to take this opportunity to comment on proposed and/or continuing information collections, as required by the Paperwork Reduction Act of 1995, Pub. L. 104–13 (44 U.S.C. 3506(c)(2)(A)).

DATES: Written comments must be submitted on or before October 14, 1997.

ADDRESSES: Direct all written comments to Linda Engelmeier, Departmental Clearance Officer, Department of Commerce, Room 5327, 14th and Constitution Avenue, NW., Washington, DC 20230.

FOR FURTHER INFORMATION CONTACT: Requests for additional information or copies of the information collection instrument(s) and instructions should be directed to Catherine Madden, Office of Technology Innovation, Building 820, Room 264, National Institute of Standards and Technology, Gaithersburg, MD 20899; phone (301) 975–5500; fax (301) 975–3839; e-mail, catherine.madden@nist.gov.

SUPPLEMENTARY INFORMATION:

I. Abstract

Section 14 of Pub. L. 93–577, Federal Nonnuclear Energy Research and Development Act of 1974, requires NIST to evaluate all energy-related inventions submitted by small businesses and individual inventors for the purpose of obtaining a grant from the Department of Energy. The information collected is used to assist in the evaluation of the inventions submitted to the program and to communicate with the inventors.

II. Method of Collection

An Evaluation Request form is provided to the general public (including individuals and small businesses), State agencies, and other Federal agencies. The inventor or submitter completes the Evaluation Request providing such information as name, address, telephone and fax numbers, patent status, stage of development, and if the inventor

considers the invention a trade secret or confidential if it is unpatented. The inventor or submitter also provides a detailed description of the invention in accordance with the Guidance for Submission which accompanies the Evaluation Request form. The Evaluation Request must be signed by the inventor or submitter. The completed Evaluation Request form and the inventor's disclosure are mailed to the Office of Technology Innovation, NIST.

III. Data

OMB Number: 0693–0002.

Form Number: NIST–1019.

Type of Review: Regular submission.

Affected Public: Individual inventors and small technology based businesses.

Estimated Number of Respondents: 750 per year.

Estimated Time Per Response: 10 hours including preparation of the invention disclosure.

Estimated Total Annual Burden Hours: 7,500 per year.

Estimated Total Annual Cost to Respondents: No cost for the submitter or inventor.

IV. Request for Comments

Comments are invited on: (a) whether the proposed collection of information is necessary for the proper performance of the agency, including whether the information shall have a practical utility; (b) the accuracy of the agency's estimate of the burden (including hours and cost) of the proposed collection of information; (c) ways to enhance the quality, utility, and clarity of the information to be collected; and (d) ways to minimize the burden of the collection of information on respondents, including through the use of automated collection techniques or other forms of information technology.

Comments submitted in response to this notice will be summarized and/or included in the request for OMB approval of this information collection; they will also become a matter of public record.

Dated: August 6, 1997.

Linda Engelmeier,

Departmental Forms Clearance Officer, Office of Management and Organization.

[FR Doc. 97–21343 Filed 8–12–97; 8:45 am]

BILLING CODE 3510–13–P

DEPARTMENT OF COMMERCE

National Institute of Standards and Technology

Visiting Committee on Advanced Technology

AGENCY: National Institute of Standards and Technology, Department of Commerce.

ACTION: Notice of partially closed meeting.

SUMMARY: Pursuant to the Federal Advisory Committee Act, 5 U.S.C. app. 2, notice is hereby given that the Visiting Committee on Advanced Technology, National Institute of Standards and Technology (NIST), will meet Tuesday, September 9, 1997, from 8:30 a.m. to 5:00 p.m., and on Wednesday, September 10, 1997, from 8:30 a.m. to 9:30 a.m. The Visiting Committee on Advanced Technology is composed of fifteen members appointed by the Director of NIST who are eminent in such fields as business, research, new product development, engineering, labor, education, management consulting, environment, and international relations. The purpose of this meeting is to review and make recommendations regarding general policy for the Institute, its organization, its budget, and its programs within the framework of applicable national policies as set forth by the President and the Congress. On September 9, 1997, the agenda will include an update on NIST programs; presentations on the NIST facilities program, the National Quality Program and the Manufacturing Extension Partnership; discussion of the Institute budget; and on September 10, 1997, a briefing and laboratory tour of the National Advanced Manufacturing Testbed. Discussions on the NIST budget, including funding levels of the Manufacturing Extension Partnership and staffing of management positions at NIST scheduled to begin at 4:15 p.m. and to end at 5:00 p.m. on September 9, 1997, will be closed.

DATES: The meeting will convene on September 9, 1997 at 8:30 a.m. and will adjourn at 9:30 a.m. on September 10, 1997.

ADDRESSES: The meeting will be held in the Employees Lounge (seating capacity 80, includes 38 participants), Administration Building, at NIST, Gaithersburg, Maryland.

FOR FURTHER INFORMATION CONTACT: Chris E. Kuyatt, Visiting Committee Executive Director, National Institute of Standards and Technology, Gaithersburg, MD 20899, telephone number (301) 975–6090.

SUPPLEMENTARY INFORMATION: The Assistant Secretary for Administration, with the concurrence of the General Counsel, formally determined on July 25, 1997, that portions of the meeting of the Visiting Committee on Advanced Technology which involve discussion of proposed funding of the Manufacturing Extension Partnership and the Advanced Technology Program may be closed in accordance with 5 U.S.C. 552b(c)(9)(B), because those portions of the meeting will divulge matters the premature disclosure of which would be likely to significantly frustrate implementation of proposed agency actions; and that portions of meetings which involve discussion of the staffing issues of management and other positions at NIST may be closed in accordance with 5 U.S.C. 552b(c)(6), because divulging information discussed in those portions of the meetings is likely to reveal information of a personal nature where disclosure would constitute a clearly unwarranted invasion of personal privacy.

Dated: August 5, 1997.

Elaine Bunten-Mines,

Associate Director.

[FR Doc 97–21337 Filed 8–12–97; 8:45 am]

BILLING CODE 3510–13–M

DEPARTMENT OF COMMERCE

National Institute of Standards and Technology

Announcement of an Opportunity To Join a Cooperative Research and Development Consortium Concerning Scanning Capacitance Microscopy Image-to-Dopant Profile Software and Metrology Techniques

AGENCY: National Institute of Standards and Technology, Commerce.

ACTION: Notice of public meeting.

SUMMARY: The National Institute of Standards and Technology (NIST) invites interested parties to attend a meeting on August 20, 1997, to discuss setting up a cooperative research consortium. The goal of the consortium is to develop a user friendly, personal-computer-based program for converting scanning capacitance microscopy images to 2–D dopant profiles.

The program will be within the scope and confines of The Federal Technology Transfer Act of 1986 (Pub. L. 99–502, 15 U.S.C. 3710a), which provides federal laboratories including NIST, with the authority to enter into cooperative research agreements with qualified parties. Under this law, NIST may contribute personnel, equipment, and

facilities—but no funds—to the cooperative research program.

Members will be expected to make a contribution to the consortium's efforts in the form of personnel, data, and/or funds. This is not a grant program.

DATES: The meeting will take place on August 20, 1997. Interested parties should contact NIST to confirm their interest at the address, telephone number or FAX number shown below.

ADDRESSES: The meeting will take place at and inquiries should be sent to Room A305, Building 225, National Institute of Standards and Technology, Gaithersburg, MD 20899–0001.

FOR FURTHER INFORMATION CONTACT: Joseph J. Kopanski, Telephone: 301–975–2089; FAX: 301–948–4081.

SUPPLEMENTARY INFORMATION: Scanning Capacitance Microscopy has moved steadily from a research topic to an existing metrology tool in support of semiconductor fabrication lines. Because SCM is sensitive to variations in dopant density it has promise as a quantitative dopant profiling tool. At NIST, an experimental SCM has been constructed and its performance under controlled operating conditions quantified. Using various techniques, NIST can now extract quantitative dopant profiles from SCM images. The challenge is to move SCM from a qualitative imaging technique to a quantitative dopant profiling tool meeting the goals for dopant profiling expressed in the SIA roadmap. A key step to meeting this challenge will be to measure and convert to dopant profiles a variety of real industrial samples and, therefore, validate the NIST approach and models used to convert images to profiles. Through this consortium we hope to gain access to samples of interest to industrial users of SCM. By cross checking against other measurements of dopant profiles, we can also determine the range of valid sample preparation and operating conditions and the measurable parameters which describe those conditions. The result will be a user friendly, personal-computer-based program for converting SCM images to 2–D dopant profiles.

Dated: August 5, 1997.

Elaine Bunten-Mines,

Director, Program Office.

[FR Doc. 97–21336 Filed 8–12–97; 8:45 am]

BILLING CODE 3510–13–M

DEPARTMENT OF COMMERCE

National Oceanic and Atmospheric Administration

Western Alaska Community Development Quota (CDQ) Program

ACTION: Proposed collection; comment request.

SUMMARY: The Department of Commerce, as part of its continuing effort to reduce paperwork and respondent burden, invites the general public and other Federal agencies to take this opportunity to comment on proposed and/or continuing information collections, as required by the Paperwork Reduction Act of 1995, Public Law 104–13 (44 U.S.C. 3506(c)(2)(A)).

DATES: Written comments must be submitted on or before October 14, 1997.

ADDRESSES: Direct all written comments to Linda Engelmeier, Departmental Forms Clearance Officer, Department of Commerce, Room 5327, 14th and Constitution Avenue, NW, Washington DC 20230.

FOR FURTHER INFORMATION CONTACT: Requests for additional information or copies of the information collection instrument(s) and instructions should be directed to Richard Roberts, OFA1x1, 1305 East-West Highway, Silver Spring, MD 20910 (301–713–3525, ext. 115).

SUPPLEMENTARY INFORMATION:

I. Abstract

The Western Alaska Community Development Quota (CDQ) Program was established to provide participating communities with a means for starting or supporting commercial seafood activities. Participating communities are allocated a percentage of the catch quotas for specified fisheries. Communities must apply for the program and make periodic reports on the activities under the program.

II. Method of Collection

Applicants follow requirements contained in 50 CFR 679. Permit applications, catch reports, and check-in/check-out reports are made on forms.

III. Data

OMB Number: 0648–0269.

Form Number: None.

Type of Review: Regular Submission.

Affected Public: Not-for-profit institutions.

Estimated Number of Respondents: 192.

Estimated Time Per Response: 500 hours for proposed Community Development Plans; 40 hours for annual reports; 20 hours for annual budget reports; 8 hours apiece for annual budget reconciliation reports and substantial amendments to plans; 4 hours for technical amendments to plans; 2 hours for permit applications and catch reports; 10 minutes for check-in and check-out reports and to print and retain scale printouts; 20 minutes to report discards on fish tickets; and 2 minutes for notices of off-loading.

Estimated Total Annual Burden Hours: 3,038.

Estimated Total Annual Cost to Public: $0—no capital costs are required.

IV. Request for Comments

Comments are invited on: (a) Whether the proposed collection of information is necessary for the proper performance of the functions of the agency, including whether the information shall have practical utility; (b) the accuracy of the agency's estimate of the burden (including hours and cost) of the proposed collection of information; (c) ways to enhance the quality, utility, and clarity of the information to be collected; and (d) ways to minimize the burden of the collection of information on respondents, including through the use of automated collection techniques or other forms of information technology.

Comments submitted in response to this notice will be summarized and/or included in the request for OMB approval of this information collection; they also will become a matter of public record.

Dated: August 7, 1997.

Linda Engelmeier,

Departmental Forms Clearance Officer, Office of Management and Organization.

[FR Doc. 97–21342 Filed 8–12–97; 8:45 am]

BILLING CODE 3510–22–P

DEPARTMENT OF ENERGY

Federal Energy Regulatory Commission

[Docket No. OA97–613–000]

Arizona Public Service Company; Notice of Filing

August 7, 1997.

Take notice that on July 9, 1997, Arizona Public Service Company tendered for filing its Revised Open Access Transmission Tariff filed in Compliance with FERC Order No. 888–A.

A copy of this filing has been served on all parties on the Service list.

Any person desiring to be heard or to protest said filing should file a motion to intervene or protest with the Federal Energy Regulatory Commission, 888 First Street, NE., Washington, DC 20426, in accordance with Rules 211 and 214 of the Commission's Rules of Practice and Procedure (18 CFR 385.211 and 18 CFR 385.214). All such motions or protests should be filed on or before August 20, 1997. Protests will be considered by the Commission in determining the appropriate action to be taken, but will not serve to make protestants parties to the proceeding. Any person wishing to become a party must file a motion to intervene. Copies of this filing are on file with the Commission and are available for public inspection.

Linwood A. Watson, Jr.,

Acting Secretary.

[FR Doc. 97–21312 Filed 8–12–97; 8:45 am]

BILLING CODE 6717–01–M

DEPARTMENT OF ENERGY

Federal Energy Regulatory Commission

[Docket No. ER97–3575–000]

Boston Edison Company; Notice of Filing

August 7, 1997.

Take notice that on July 9, 1997, Boston Edison Company of Boston, Massachusetts, submitted additional documents in connection with its June 30, 1997 tender of a rate schedule in Docket No. ER97–3575–000 for the sale of emergency power from the OSP and OSP II units. Boston Edison states that it has served copies of its filing on the recipients of its June 30, 1997 submission.

Any person desiring to be heard or to protest said filing should file a motion to intervene or protest with the Federal Energy Regulatory Commission, 888 First Street, N.E., Washington, D.C. 20426, in accordance with Rules 211 and 214 of the Commission's Rules of Practice and Procedure (18 CFR 385.211 and 18 CFR 385.214). All such motions or protests should be filed on or before August 18, 1997. Protests will be considered by the Commission in determining the appropriate action to be taken, but will not serve to make protestants parties to the proceeding. Any person wishing to become a party must file a motion to intervene. Copies of this filing are on file with the Commission and are available for public inspection.

Linwood A. Watson, Jr.,

Acting Secretary.

[FR Doc. 97–21305 Filed 8–12–97; 8:45 am]

BILLING CODE 6717–01–M

DEPARTMENT OF ENERGY

Federal Energy Regulatory Commission

[Docket No. ER97–920–000]

The Cleveland Electric Illuminating Company; Notice of Filing

August 7, 1997.

Take notice that on August 4, 1997, The Cleveland Electric Illuminating Company tendered for filing an amendment in the above-referenced docket.

Any person desiring to be heard or to protest said filing should file a motion to intervene or protest with the Federal Energy Regulatory Commission, 888 First Street, N.E., Washington, D.C. 20426, in accordance with Rules 211 and 214 of the Commission's Rules of Practice and Procedure (18 CFR 385.211 and 18 CFR 385.214). All such motions or protests should be filed on or before August 20, 1997. Protests will be considered by the Commission in determining the appropriate action to be taken, but will not serve to make protestants parties to the proceeding. Any person wishing to become a party must file a motion to intervene. Copies of this filing are on file with the Commission and are available for public inspection.

Linwood A. Watson, Jr.,

Acting Secretary.

[FR Doc. 97–21324 Filed 8–12–97; 8:45 am]

BILLING CODE 6717–01–M

DEPARTMENT OF ENERGY

Federal Energy Regulatory Commission

[Docket No. ER97–2463–000]

Fitchburg Gas & Electric Company; Notice of Filing

August 7, 1997.

Take notice that on August 1, 1997, Fitchburg Gas & Electric Company tendered for filing an amendment in the above-referenced docket.

Any person desiring to be heard or to protest said filing should file a motion to intervene or protest with the Federal Energy Regulatory Commission, 888 First Street, N.E., Washington, D.C. 20426, in accordance with Rules 211 and 214 of the Commission's Rules of Practice and Procedure (18 CFR 385.211 and 18 CFR 385.214). All such motions or protests should be filed on or before August 20, 1997. Protests will be considered by the Commission in determining the appropriate action to be taken, but will not serve to make protestants parties to the proceeding. Any person wishing to become a party must file a motion to intervene. Copies of this filing are on file with the Commission and are available for public inspection.

Linwood A. Watson, Jr.,

Acting Secretary.

[FR Doc. 97–21321 Filed 8–12–97; 8:45 am]

BILLING CODE 6717–01–M

DEPARTMENT OF ENERGY

Federal Energy Regulatory Commission

[Docket No. EL94–81–005]

Georgia Power Company; Notice of Filing

August 7, 1997.

Take notice on April 2, 1997, Georgia Power Company tendered for its refund report in the above-referenced docket.

Any person desiring to be heard or to protest said filing should file a motion to intervene or protest with the Federal Energy Regulatory Commission, 888 First Street, N.E., Washington, D.C. 20426, in accordance with Rules 211 and 214 of the Commission's Rules of Practice and Procedure (18 CFR 385.211 and 18 CFR 385.214). All such motions or protests should be filed on or before August 18, 1997. Protests will be considered by the Commission in determining the appropriate action to be taken, but will not serve to make protestants parties to the proceeding. Any person wishing to become a party must file a motion to intervene. Copies of this filing are on file with the Commission and are available for public inspection.

Linwood A. Watson, Jr.,

Acting Secretary.

[FR Doc. 97–21325 Filed 8–12–97; 8:45 am]

BILLING CODE 6717–01–M

DEPARTMENT OF ENERGY

Federal Energy Regulatory Commission

[Docket No. ER97–3647–000]

Idaho Power Company; Notice of Filing

August 7, 1997.

Take notice that on July 16, 1997, Idaho Power Company (IPC) tendered for filing with the Federal Energy Regulatory Commission Service Agreements under Idaho Power Company's FERC Electric Tariff No. 6, Market Rate Power Sales Tariff, between Idaho Power Company and Truckee Donner Public Utility District, Oregon Trail Electric Consumers Cooperative, and Energy Services, Inc.

Any person desiring to be heard or to protest said filing should file a motion to intervene or protest with the Federal Energy Regulatory Commission, 888 First Street, N.E., Washington, D.C. 20426, in accordance with Rules 211 and 214 of the Commission's Rules of Practice and Procedure (18 CFR 385.211 and 18 CFR 385.214). All such motions or protests should be filed on or before August 20, 1997. Protests will be considered by the Commission in determining the appropriate action to be taken, but will not serve to make protestants parties to the proceeding. Any person wishing to become a party must file a motion to intervene. Copies of this filing are on file with the Commission and are available for public inspection.

Linwood A. Watson, Jr.,

Acting Secretary.

[FR Doc. 97–21315 Filed 8–12–97; 8:45 am]

BILLING CODE 6717–01–M

DEPARTMENT OF ENERGY

Federal Energy Regulatory Commission

[Docket No. ER97–3300–000]

Idaho Power Company; Notice of Filing

August 7, 1997.

Take notice that on August 4, 1997, Idaho Power Company tendered for filing an amendment in the above-referenced docket.

Any person desiring to be heard or to protest said filing should file a motion to intervene or protest with the Federal Energy Regulatory Commission, 888 First Street, N.E., Washington, D.C. 20426 in accordance with Rules 211 and 214 of the Commission's Rules of Practice and Procedure (18 CFR 385.211 and 18 CFR 385.214). All such motions or protests should be filed on or before August 20, 1997. Protests will be considered by the Commission in determining the appropriate action to be taken, but will not serve to make protestants parties to the proceeding. Any person wishing to become a party must file a motion to intervene. Copies of this filing are on file with the Commission and are available for public inspection.

Linwood A. Watson, Jr.,

Acting Secretary.

[FR Doc. 97–21317 Filed 8–12–97; 8:45 am]

BILLING CODE 6717–01–M

DEPARTMENT OF ENERGY

Federal Energy Regulatory Commission

[Docket No. ER97–342–003]

Kern River Gas Transmission; Notice of Compliance Filing

August 7, 1997.

Take notice that on August 5, 1997, Kern River Gas Transmission (Kern River) tendered for filing as part of its FERC Gas Tariff, First Revised Volume No. 1 the following tariff sheets with a proposed effective date of June 1, 1997:

Substitute Fifth Revised Sheet No. 93
Substitute Second Revised Sheet No. 94
Second Substitute Original Sheet No. 94–A

Kern River states that the purpose of this filing is to comply with the Commission's Letter Order dated July 23, 1997 in Docket No. RP97–342–001 (Order). The Order requires Kern River to delete the provision that states that Kern River will communicate quantities scheduled from nominations received non-electronically as soon as possible after the 4:30 p.m. Central Clock Time posting of quantities scheduled from nominations received electronically.

Any person desiring to protest this filing should file a protest with the Federal Energy Regulatory Commission, 888 First Street, N.E., Washington, D.C. 20426, in accordance with Section 385.211 of the Commission Rules and Regulations. All such protests must be filed as provided in Section 154.210 of the Commission's Regulations. Protests will be considered by the Commission in determining the appropriate action to be taken, but will not serve to make protestants parties to the proceeding. Copies of this filing are on file with the Commission and are available for public inspection in the Public Reference Room.

Linwood A. Watson, Jr.,

Acting Secretary.

[FR Doc. 97–21306 Filed 8–12–97; 8:45 am]

BILLING CODE 6717–01–M

DEPARTMENT OF ENERGY

Federal Energy Regulatory Commission

[Docket No. ER97–327–001]

Koch Gateway Pipeline Company; Notice of Compliance Filing

August 7, 1997.

Take notice that on August 5, 1997, Koch Gateway Pipeline Company (Koch) tendered for filing as part of its FERC Gas Tariff, Fifth Revised Volume No. 1, the following tariff sheets:

Substitute First Revised Sheet No. 1407
Third Revised Sheet No. 1408

Koch states that this filing is in compliance with the Commission's July 21, 1997, Letter Order in the above captioned proceeding. The revised tariff sheets will clarify that the period of time in which a qualifying request will be processed after receipt of such request is 30 days.

Koch also states that it has served copies of this filing upon each person on the official service list compiled by the Secretary in this proceeding.

Any person desiring to protest this filing should file a protest with the Federal Energy Regulatory Commission, 888 First Street, NE., Washington, DC 20426, in accordance with Section 385.211 of the Commission's rules and regulations. All such protests must be filed as provided by Section 154.210 of the Commission's rules and regulations. Protests will be considered by the Commission in determining the appropriate action to be taken, but will not serve to make protestants parties to the proceeding. Copies of this filing are on file with the Commission and are available for public inspection in the Public Reference Room.

Linwood A. Watson, Jr.,

Acting Secretary.

[FR Doc. 97–21307 Filed 8–12–97; 8:45 am]

BILLING CODE 6717–01–M

DEPARTMENT OF ENERGY

Federal Energy Regulatory Commission

[Docket No. ER97–3592–000]

MG Electric Power, Inc.; Notice of Filing

August 7, 1997.

On July 10, 1997, MG Electric Power Inc., tendered for filing a Notice of Cancellation of Rate Schedule FERC No. 1 in the above-referenced docket.

Any person desiring to be heard or to protest said filing should file a motion

to intervene or protest with the Federal Energy Regulatory Commission, 888 First Street, NE., Washington, DC 20426, in accordance with Rules 211 and 214 of the Commission's Rules of Practice and Procedure (18 CFR 385.211 and 18 CFR 385.214). All such motions or protests should be filed on or before August 18, 1997. Protests will be considered by the Commission in determining the appropriate action to be taken, but will not serve to make protestants parties to the proceeding. Any person wishing to become a party must file a motion to intervene. Copies of this filing are on file with the Commission and are available for public inspection.

Linwood A. Watson, Jr.,

Acting Secretary.

[FR Doc. 97–21316 Filed 8–12–97; 8:45 am]

BILLING CODE 6717–01–M

DEPARTMENT OF ENERGY

Federal Energy Regulatory Commission

[Docket No. RP97–59–008]

Midwestern Gas Transmission Company; Notice of Compliance Filing

August 7, 1997.

Take notice that on August 4, 1997, Midwestern Gas Transmission Company (Midwestern), tendered for filing as part of its FERC Gas Tariff, Second Revised Volume No. 1, Sub First Revised Second Revised Sheet No. 110A, with an effective date of August 1, 1997.

Midwestern states that the revised tariff sheet corrects a typographical error as identified in the July 24, 1997 Letter Order of the Office of Pipeline Regulation issued in the above-referenced dockets (July 24 Letter Order).

Any person desiring to protest this filing should file a protest with the Federal Energy Regulatory Commission, 888 First Street N.E., Washington, D.C. 20426, in accordance with Section 385.211 of the Commission's Rules and Regulations. All such protests must be filed as provided in Section 154.210 of the Commission's Regulations. Protests will be considered by the Commission in determining the appropriate action to be taken, but will not serve to make protestants parties to this proceeding. Copies of this filing are on file with the Commission and available for public inspection in the Public Reference Room.

Linwood A. Watson, Jr.,

Acting Secretary.

[FR Doc. 97–21308 Filed 8–12–97; 8:45 am]

BILLING CODE 6717–01–M

DEPARTMENT OF ENERGY

Federal Energy Regulatory Commission

[Docket No. GT97–60–000]

Mojave Pipeline Company; Notice of Proposed Changes in FERC Gas Tariff

August 7, 1997.

Take notice that on August 4, 1997, Mojave Pipeline Company (Mojave), tendered for filing and acceptance pursuant to Subpart C of Part 154 of the Federal Energy Regulatory Commission (Commission) Regulations Under the Natural Gas Act, the following tariff sheets:

Second Revised Volume No. 1

Original Sheet Nos. 1–519

Mojave states that it has submitted for filing its Second Revised Volume No. 1 which replaces Mojave's First Revised Volume No. 1 in its entirety. Mojave states that the tendered tariff volume has been repaginated due to a change in word processing computer software. However, Mojave states the textual contents have not changed except for minor wording changes. Mojave requests that the tendered tariff sheets be accepted for filing and permitted to become effective September 1, 1997.

Mojave states that copies of the filing were served upon all of Mojave's interstate pipeline system transportation customers and interested states regulatory commissions.

Any person desiring to be heard or to protest said filing should file a motion to intervene or protest with the Federal Energy Regulatory Commission, 888 First Street, NE, Washington, DC 20426, in accordance with Sections 385.214 and 385.211 of the Commission's Rules and Regulations. All such motions or protests must be filed in accordance with Section 154.210 of the Commission's Regulation. Protests will be considered by the Commission in determining the appropriate action to be taken, but will not serve to make protestants parties to the proceeding. Any person wishing to become a party must file a motion to intervene. Copies of this filing are on file with the Commission and are available for public inspection in the Public Reference Room.

Linwood A. Watson, Jr.,

Acting Secretary.

[FR Doc. 97–21313 Filed 8–12–97; 8:45 am]

BILLING CODE 6717–01–M

DEPARTMENT OF ENERGY

Federal Energy Regulatory Commission

[Docket No. RP94–325–006]

Panhandle Eastern Pipe Line Company; Notice of Refund Report

August 7, 1997.

Take notice that on August 4, 1997, Panhandle Eastern Pipe Line Company (Panhandle) tendered for filing its Refund Report in accordance with Article I, Section 2 of the Stipulation and Agreement (Settlement) dated March 24, 1997.

Panhandle states that this Settlement resolves all remaining Gas Supply Realignment cost recovery issues with the Municipal Gas Commission of Missouri (MGCM).

On July 3, 1997 Panhandle states that it distributed checks for the Settlement Refunds to all affected members of MGCM in accordance with Article I, Section 2 of the Settlement.

Panhandle states that copies of this filing are being served on all affected customers, applicable state regulatory agencies and all parties to these proceedings.

Any person desiring to protest this filing should file a protest with the Federal Energy Regulatory Commission, 888 First Street, N.E., Washington, D.C. 20426, in accordance with Section 385.211 of the Commission's Rules and Regulations. All such protests must be filed on or before August 14, 1997. Protests will be considered by the Commission in determining the appropriate action to be taken, but will not serve to make protestants parties to the proceeding. Copies of the filing are on file with the Commission and are available for public inspection in the Public Reference Room.

Linwood A. Watson, Jr.,

Acting Secretary.

[FR Doc. 97–21309 Filed 8–12–97; 8:45 am]

BILLING CODE 6717–01–M

DEPARTMENT OF ENERGY

Federal Energy Regulatory Commission

[Docket No. RP88–262–036]

Panhandle Eastern Pipe Line Company; Notice of Refund Report

August 7, 1997.

Take notice that on August 5, 1997, Panhandle Eastern Pipe Line Company (Panhandle) tendered for filing its Refund Report in accordance with Article II, Section 2 of the Stipulation and Agreement (Settlement) dated April 25, 1997.

Panhandle states that this Settlement resolves its refund and repayment obligations to Associated Natural Gas Company (Associated) for the Docket No. RP88–262–000 rate period.

On July 10, 1997 Panhandle states that it distributed a check for $30,000 to Associated, representing the Settlement Amount in accordance with Article II, Section 1 of the Settlement.

Panhandle states that copies of this filing are being served on all affected customers, applicable state regulatory agencies and all parties to these proceedings.

Any person desiring to protest this filing should file protest with the Federal Energy Regulatory Commission, 888 First Street, NE., Washington, DC 20426, in accordance with Section 385.211 of the Commission's Rules and Regulations. All such protests must be filed on or before August 14, 1997. Protests will be considered by the Commission in determining the appropriate action to be taken, but will not serve to make protestants parties to the proceeding. Copies of this filing are on file with the Commission and are available for public inspection in the Public Reference Room.

Linwood A. Watson, Jr.,

Acting Secretary.

[FR Doc. 97–21310 Filed 8–12–97; 8:45 am]

BILLING CODE 6717–01–M

DEPARTMENT OF ENERGY

Federal Energy Regulatory Commission

[Docket No. ER97–2915–001]

Pennsylvania Power & Light Company; Notice of Filing

August 7, 1997.

Take notice that on July 18, 1997, Pennsylvania Power & Light Company (PP&L), filed a Refund Report in connection with a late-filed Service Agreement with Baltimore Gas & Electric Company (BG&E) for the sale of capacity and/or energy under PP&L's Short Term Capacity and/or energy Sales Tariff. The Service Agreement adds BG&E as an eligible customer under the Tariff.

PP&L states that copies of this filing have been supplied to BG&E and to the Pennsylvania Public Utility Commission.

Any person desiring to be heard or to protest said filing should file a motion to intervene or protest with the Federal Energy Regulatory Commission, 888 First Street, NE., Washington, DC 20426, in accordance with Rules 211 and 214 of the Commission's Rules of Practice and Procedure (18 CFR 385.211 and 18 CFR 385.214). All such motions or protests should be filed on or before August 20, 1997. Protests will be considered by the Commission in determining the appropriate action to be taken, but will not serve to make protestants parties to the proceeding. Any person wishing to become a party must file a motion to intervene. Copies of this filing are on file with the Commission and are available for public inspection.

Linwood A. Watson, Jr.,

Acting Secretary.

[FR Doc. 97–21319 Filed 8–12–97; 8:45 am]

BILLING CODE 6717–01–M

DEPARTMENT OF ENERGY

Federal Energy Regulatory Commission

[Docket No. ER97–2913–001]

Pennsylvania Power & Light Company; Notice of Filing

August 7, 1997.

Take notice that on July 18, 1997, Pennsylvania Power & Light Company (PP&L), filed a Refund Report July 18, 1997, in connection with a late-filed Service Agreement with Koch Power Services, Inc. (KPSI) for the sale of capacity and/or energy under PP&L's Short Term Capacity and/or energy Sales Tariff. The Service Agreement adds KPSI as an eligible customer under the Tariff.

PP&L states that copies of this filing have been supplied to KPSI and to the Pennsylvania Public Utility Commission.

Any person desiring to be heard or to protest said filing should file a motion to intervene or protest with the Federal Energy Regulatory Commission, 888 First Street, N.E., Washington, D.C. 20426, in accordance with Rules 211 and 214 of the Commission's Rules of Practice and Procedure (18 CFR 385.211 and 18 CFR 385.214). All such motions or protests should be filed on or before August 20, 1997. Protests will be considered by the Commission in determining the appropriate action to be taken, but will not serve to make protestants parties to the proceeding. Any person wishing to become a party must file a motion to intervene. Copies of this filing are on file with the Commission and are available for public inspection.

Linwood A. Watson, Jr.,

Acting Secretary.

[FR Doc. 97–21320 Filed 8–12–97; 8:45 am]

BILLING CODE 6717–01–M

DEPARTMENT OF ENERGY

Federal Energy Regulatory Commission

[Docket No. ER97–3839–000]

PJM Interconnection, L.L.C. Operating, Agreement; Notice of Filing

August 7, 1997.

Take notice that on July 23, 1997, the PJM Interconnection, L.L.C. (PJM) filed, on behalf of the Members of the LLC, a membership application of ProMark Energy, Inc. PJM requests an effective date of July 23, 1997.

Any person desiring to be heard or to protest said filing should file a motion to intervene or protest with the Federal Energy Regulatory Commission, 888 First Street, NE., Washington, DC 20426, in accordance with Rules 211 and 214 of the Commission's Rules of Practice and Procedure (18 CFR 385.211 and 18 CFR 385.214). All such motions or protests should be filed on or before August 20, 1997. Protests will be considered by the Commission in determining the appropriate action to be taken, but will not serve to make protestants parties to the proceeding. Any person wishing to become a party must file a motion to intervene. Copies of this filing are on file with the Commission and are available for public inspection.

Linwood A. Watson, Jr.,

Acting Secretary.

[FR Doc. 97–21314 Filed 8–12–97; 8:45 am]

BILLING CODE 6717–01–M

DEPARTMENT OF ENERGY

Federal Energy Regulatory Commission

[Docket No. OA97–691–000]

Southwestern Public Service Company, Notice of Filing

August 7, 1997.

Take notice that on July 14, 1997, Cheyenne Light, Fuel and Power Company (Cheyenne), Public Service Company of Colorado (PSColorado), and Southwestern Public Service Company (Southwestern) submitted a revised joint open access transmission tariff (Tariff). The Tariff, submitted in accordance with Order No. 888–A and the Commission's order in Docket No. ER96–2572–000, is intended to supersede the Cheyenne and PSColorado joint open access transmission tariff and the Southwestern open access transmission tariff.

Any person desiring to be heard or to protest said filing should file a motion to intervene or protest with the Federal Energy Regulatory Commission, 888 First Street, NE., Washington, DC 20426, in accordance with Rules 211 and 214 of the Commission's Rules of Practice and Procedure (18 CFR 385.211 and 18 CFR 385.214). All such motions or protests should be filed on or before August 20, 1997. Protests will be considered by the Commission in determining the appropriate action to be taken, but will not serve to make protestants parties to the proceeding. Any person wishing to become a party must file a motion to intervene. Copies of this filing are on file with the Commission and are available for public inspection.

Linwood A. Watson, Jr.,

Acting Secretary.

[FR Doc. 97–21311 Filed 8–12–97; 8:45 am]

BILLING CODE 6717–01–M

DEPARTMENT OF ENERGY

Federal Energy Regulatory Commission

[Docket No. CP97–276–000]

Texas Eastern Transmission Corporation; Notice of Site Visit

August 7, 1997.

On August 18, 1997, the Office of Pipeline Regulation (OPR) staff will inspect, on the ground, locations related to the facilities proposed by Texas Eastern Transmission Corporation (Texas Eastern) for the Line 1–A Reactivation Project in Chester and Delaware Counties, Pennsylvania.

All interesting parties may attend. OPR staff will depart from the existing Texas Eastern Phoenixville/Eagle Compressor Station located at 560 Pottstown Pike in Uwchland, Pennsylvania at 12:00 noon. OPR staff plans to inspect the entire project on August 18, 1997; however, should this not be possible, OPR staff will continue the inspection at 8:00 a.m. the morning of August 19, 1997. Those planning to attend the August 18, 1997 site inspection must provide their own transportation.

For further information, call Mr. Paul McKee, Office of External Affairs, at (202) 208–1088.

Linwood A. Watson, Jr.,

Acting Secretary.

[FR Doc. 97–21328 Filed 8–12–97; 8:45 am]

BILLING CODE 6717–01–M

DEPARTMENT OF ENERGY

Federal Energy Regulatory Commission

[Docket No. ER97–3124–000]

United Illuminating Company; Notice of Filing

August 7, 1997.

On July 11, 1997, United Illuminating Company tendered for filing a Certificate of Concurrence in the above-referenced docket.

Any person desiring to be heard or to protest said filing should file a motion to intervene or protest with the Federal Energy Regulatory Commission, 888 First Street, NE., Washington, D.C. 20426, in accordance with Rules 211 and 214 of the Commission's Rules of Practice and Procedure (18 CFR 385.211 and 18 CFR 385.214). All such motions or protests should be filed on or before August 18, 1997. Protests will be considered by the Commission in determining the appropriate action to be taken, but will not serve to make protestants parties to the proceeding. Any person wishing to become a party must file a motion to intervene. Copies of this filing are on file with the Commission and are available for public inspection.

Linwood A. Watson, Jr.

Acting Secretary.

[FR Doc. 97–21318 Filed 8–12–97; 8:45 am]

BILLING CODE 6717–01–M

DEPARTMENT OF ENERGY

Federal Energy Regulatory Commission

[Docket No. ER97–2460–000]

Unitil Power Corporation; Notice of Filing

August 7, 1997.

Take notice that on August 1, 1997, Unitil Power Corporation, tendered for filing an amendment in the above-referenced docket.

Any person desiring to be heard or to protest said filing should file a motion to intervene or protest with the Federal Energy Regulatory Commission, 888 First Street, N.E., Washington, D.C. 20426 in accordance with Rules 211 and 214 of the Commission's Rules of Practice and Procedure (18 CFR 385.211 and 18 CFR 385.214). All such motions or protests should be filed on or before August 20, 1997. Protests will be considered by the Commission in determining the appropriate action to be taken, but will not serve to make protestants parties to the proceeding. Any person wishing to become a party must file a motion to intervene. Copies of this filing are on file with the Commission and are available for public inspection.

Linwood A. Watson, Jr.,

Acting Secretary.

[FR Doc. 97–21323 Filed 8–12–97; 8:45 am]

BILLING CODE 6717–01–M

DEPARTMENT OF ENERGY

Federal Energy Regulatory Commission

[Docket No. ER97–2462–000]

Unitil Resources, Inc.; Notice of Filing

August 7, 1997.

Take notice that on August 1, 1997, Unitil Resources, Inc., tendered for filing an amendment in the above-referenced docket.

Any person desiring to be heard or to protest said filing should file a motion to intervene or protest with the Federal Energy Regulatory Commission, 888 First Street, N.E., Washington, D.C. 20426, in accordance with Rules 211 and 214 of the Commission's Rules of Practice and Procedure (18 CFR 385.211 and 18 CFR 385.214). All such motions or protests should be filed on or before August 20, 1997. Protests will be considered by the Commission in determining the appropriate action to be taken, but will not serve to make protestants parties to the proceeding. Any person wishing to become a party

must file a motion to intervene. Copies of this filing are on file with the Commission and are available for public inspection.

Linwood A. Watson, Jr.,

Acting Secretary.

[FR Doc. 97–21322 Filed 8–12–97; 8:45 am]

BILLING CODE 6717–01–M

DEPARTMENT OF ENERGY

Federal Energy Regulatory Commission

[Docket No. CP97–678–000]

Williams Natural Gas Company; Notice of Request Under Blanket Authorization

August 7, 1997.

Take notice that on July 31, 1997, Williams Natural Gas Company (WNG), P.O. Box 3288, Tulsa, Oklahoma 74101, filed in Docket No. CP97–678–000 a request pursuant to Sections 157.205, 157.212, and 157.216 of the Commission's Regulations under the Natural Gas Act (18 CFR 157.205, 157.211, 157.216) for authorization (1) to replace and relocate the Western Resources, Inc. (WRI) Arnett, Oklahoma town border setting, (2) to install a tap on the Canadian-Blackwell 26-inch pipeline to deliver gas to the Arnett town border, and (3) to abandon the delivery of gas from the Pampa 20-inch pipeline, all in Ellis County, Oklahoma, under WNG's blanket certificate issued in Docket No. CP82–479–000 pursuant to Section 7 of the Natural Gas Act, all as more fully set forth in the request that is on file with the Commission and open to public inspection.

WNG states that the projected volume of delivery to the new Arnett town border is not expected to exceed current deliveries. The total project cost is estimated to be $83,849, which will be paid from available funds. WNG further states that this change is not prohibited by an existing tariff and that it has sufficient capacity to accomplish the deliveries without detriment or disadvantage to its other customers.

Any person or the Commission's staff may, within 45 days after issuance of the instant notice by the Commission, file pursuant to Rule 214 of the Commission's Procedural Rules (18 CFR 385.214) a motion to intervene or notice of intervention and pursuant to Section 157.205 of the Regulations under the Natural Gas Act (18 CFR 157.205) a protest to the request. If no protest is filed within the time allowed therefor, the proposed activity shall be deemed to be authorized effective the day after the time allowed for filing a protest. If a protest is filed and not withdrawn within 30 days after the time allowed for filing a protest, the instant request shall be treated as an application for authorization pursuant to Section 7 of the Natural Gas Act.

Linwood A. Watson, Jr.,

Acting Secretary.

[FR Doc. 97–21327 Filed 8–12–97; 8:45 am]

BILLING CODE 6717–01–M

DEPARTMENT OF ENERGY

Federal Energy Regulatory Commission

[Docket No. ID–2449–001]

Barry Lawson Williams; Notice of Application for Authorization to Hold Interlocking Positions

August 7, 1997.

Take notice that on July 18, 1997, Barry Lawson Williams, Applicant, filed an application pursuant to Section 305(b) of the Federal Power Act and Part 45 of the Commission's Regulations to hold the following positions:

Director, Pacific Gas & Electric Company
Director, CompUSA, Inc.

Any person desiring to be heard or protest said filing should file a motion to intervene or protest with the Federal Energy Regulatory Commission, 888 First Street, N.E., Washington, D.C. 20426, in accordance with the Rules 211 and 214 of the Commission's Rule of Practice and Procedure (18 CFR 385.211 and 18 CFR 385.214). All such motions or protests should be filed on or before August 20, 1997. Protests will be considered by the Commission in determining the appropriate action to be taken, but will not serve to make protestants parties to the proceeding. Any person wishing to become a party must file a motion to intervene. Copies of this filing are on file with the Commission and are available for public inspection.

Linwood A. Watson, Jr.,

Acting Secretary.

[FR Doc. 97–21326 Filed 8–12–97; 8:45 am]

BILLING CODE 6717–01–M

DEPARTMENT OF ENERGY

Federal Energy Regulatory Commission

[Docket No. ER97–3710–000]

Wisconsin Public Service Corporation; Notice of Filing

August 7, 1997.

Take notice that on July 18, 1997, Wisconsin Public Service Corporation (WPSC) tendered for filing an executed Transmission Service Agreement between WPSC and itself. The Agreement provides for transmission service under the Open Access Transmission Service Tariff, FERC Original Volume No. 11.

Any person desiring to be heard or to protest said filing should file a motion to intervene or protest with the Federal Energy Regulatory Commission, 888 First Street, N.E., Washington, D.C. 20426 in accordance with Rules 211 or 214 of the Commission's Rules of Practice and Procedure (18 CFR 385.211 and 385.214). All such motions or protests should be filed on or before August 20, 1997. Protests will be considered by the Commission in determining the appropriate action to be taken but will not serve to make the protestants parties to the proceeding. Any person wishing to become a party must file a motion to intervene. Copies of this filing are on file with the Commission and are available for public inspection.

Linwood A. Watson, Jr.,

Acting Secretary.

[FR Doc. 97–21304 Filed 8–12–97; 8:45 am]

BILLING CODE 6717–01–M

ENVIRONMENTAL PROTECTION AGENCY

[FRL–5874–2]

Agency Information Collection Activities: Submission for OMB Review, Comment Request; Continuous Release Reporting Regulation (CRRR) Under the Comprehensive Environmental Response, Compensation, and Liability Act of 1980 (CERCLA)

AGENCY: Environmental Protection Agency (EPA).

ACTION: Notice.

SUMMARY: In compliance with the Paperwork Reduction Act (44 U.S.C. 3501 et seq.), this notice announces that the following Information Collection Request (ICR) has been forwarded to the Office of Management and Budget

(OMB) for review and approval: Continuous Release Reporting Regulation (CRRR) under the Comprehensive Environmental Response, Compensation, and Liability Act of 1980 (CERCLA), OMB control number 2050–0086, EPA ICR Number 1445, expiring September 30, 1997. The ICR describes the nature of the information collection and its expected burden and cost; where appropriate, it includes the actual data collection instrument.

DATES: Comments must be submitted on or before September 12, 1997.

FOR FURTHER INFORMATION OR A COPY CALL: Sandy Farmer at EPA, (202) 260–2740, and refer to EPA ICR No. 1445.04.

SUPPLEMENTARY INFORMATION:

Title: Continuous Release Reporting Regulation (CRRR) under the Comprehensive Environmental Response, Compensation, and Liability Act of 1980 (CERCLA), (OMB Control Number: 2050–0086; EPA ICR No. 1445) expiring 9/30/97. This ICR requests an extension of a currently approved collection.

Abstract: This ICR addresses the reporting and recordkeeping activities required to comply with the continuous release reporting regulation (CRRR; 40 CFR 302.8) specified in section 103(f)(2) of CERCLA. The CRRR was developed as a reporting burden reduction regulation; the CRRR provides relief from the per-occurrence notification requirements of CERCLA section 103(a) for hazardous substance releases that are ''continuous,'' ''stable in quantity and rate,'' and for which notification has been given ''for a period sufficient to establish the continuity, quantity, and regularity'' of the release. Notification of qualifying releases must be provided ''annually, or at such time as there is any statistically significant increase'' in the quantity of the release. The information collection requirements of the CRRR are necessary to determine if response actions are needed to control or mitigate any potential adverse effects associated with a reported hazardous substance release. The CRRR requires five types of notification activities:

- One or more initial telephone calls to the National Response Center (NRC);
- An initial written report to the EPA Region;
- A follow-up written report to the EPA Region one year after submission of the initial written report;
- Notification to the EPA Region of any changes in release information previously submitted (including either a change in composition, source, or quantity, or another type of change); and
- Immediate notification of any statistically significant increase (SSI) in the quantity or the release to the NRC.

An agency may not conduct or sponsor, and a person is not required to respond to, a collection of information unless it displays a currently valid OMB control number. The OMB control numbers for EPA's regulations are listed in 40 CFR part 9 and 48 CFR Chapter 15. The **Federal Register** Notice required under 5 CFR 1320.8(d), soliciting comments on this collection of information was published on May 14, 1997 (62 FR 26500). No comments were received.

Burden Statement: The annual public reporting and recordkeeping burden for this collection of information is estimated as follows: A respondent is assumed to file one continuous release report per release and to experience a change in the release (e.g., a change in facility ownership or address) requiring submittal of a letter of changed information to the EPA Regions. The burden is estimated to average a total of 17.5 hours for the first year and 11.5 hours for each subsequent year for a typical release. First year burden hours are estimated as: 3 hours for providing initial telephone notification, 8 hours for preparing the initial written report, 4 hours for recordkeeping, and 2.5 hours for reporting a change in the release. Subsequent year burden hours are estimated as: 5 hours for preparing a follow-up written report and conducting annual evaluations, 4 hours for recordkeeping, and 2.5 hours for reporting a change in the release. Burden means the total time, effort, or financial resources expended by persons to generate, maintain, retain, or disclose or provide information to or for a Federal agency. This includes the time needed to review instructions; develop, acquire, install, and utilize technology and systems for the purposes of collecting, validating, and verifying information, processing and maintaining information, and disclosing and providing information; adjust the existing ways to comply with any previously applicable instructions and requirements; train personnel to be able to respond to a collection of information; search data sources; complete and review the collection of information; and transmit or otherwise disclose the information.

Respondents/Affected Entities: 2,342.

Estimated Number of Respondents: 2,342.

Frequency of Response: Annual plus occasional changes.

Estimated Total Annual Hour Burden: 181,180.

Estimated Total Annual Cost Burden: $159,000.

Send comments on the Agency's need for this information, the accuracy of the provided burden estimates, and any suggested methods for minimizing respondent burden, including through the use of automated collection techniques to the following addresses. Please refer to EPA ICR No. 1445.04 and OMB Control No. 2050–0086 in any correspondence.

Ms. Sandy Farmer, U.S. Environmental Protection Agency, OPPE Regulatory Information Division (2137), 401 M Street, SW., Washington, DC 20460, and

Office of Information and Regulatory Affairs, Office of Management and Budget, Attention: Desk Officer for EPA, 725 17th Street, NW., Washington, DC 20503.

Dated: August 7, 1997.

Joseph Retzer,

Director, Regulatory Information Division.

[FR Doc. 97–21378 Filed 8–11–97; 8:45 am]

BILLING CODE 6560–50–P

ENVIRONMENTAL PROTECTION AGENCY

[OPP–66243; FRL–5736–2]

Vinclozolin; Voluntary Deletion of Uses to Obtain Another Use While Maintaining Acceptable Acute Dietary Risk

AGENCY: Environmental Protection Agency (EPA).

ACTION: Notice of receipt of request to delete uses.

SUMMARY: This notice, pursuant to section 6(f)(1) of the Federal Insecticide, Fungicide, and Rodenticide Act (FIFRA), announces EPA's receipt of requests from BASF Corporation to delete certain uses from its products containing 3-(3,5-Dichlorophenyl)-5-ethenyl-5-methyl-2,4-oxazolidinedione), or vinclozolin, in order to obtain a new registration for succulent beans.

DATES: Public comment will be accepted until September 12, 1997.

ADDRESSES: By mail, submit comments to: Public Information and Records Integrity Branch, Information Resources and Services Division (7506C), Office of Pesticide Programs, 401 M St., SW., Washington, DC 20460. In person deliver comments to: Rm. 1132, Crystal Mall #2, 1921 Jefferson Davis Highway, Arlington, VA.

Comments and data may also be submitted electronically by following the instructions under Unit VII. of this

document. No Confidential Business Information (CBI) should be submitted through e-mail.

FOR FURTHER INFORMATION CONTACT: By mail: Mark Wilhite, Special Review Branch (7508W), Special Review and Reregistration Division, Environmental Protection Agency, 401 M St., SW., Washington, DC 20046. Office location, telephone number, and e-mail address: Special Review Branch, 3rd floor, 2800 Crystal Drive, Arlington, VA, (703) 308–8586, e-mail: wilhite.mark@epamail.epa.gov.

SUPPLEMENTARY INFORMATION:

I. Background Information

Vinclozolin (trade names Ronilan, Curalan, and Ornilan) is a fungicide first registered in 1981 to control various types of rot caused by *Botrytis spp.*, *Sclerotinia spp*, and other types of mold and blight causing organisms, on strawberries, lettuce (all types), stonefruit, tomatoes, grapes, raspberries, onions, succulent beans, residential turf, recreational areas, golf courses, commercial and industrial sites. Vinclozolin is also registered for use on ornamental plants in green houses and nurseries. BASF, the sole registrant of vinclozolin used on food commodities, sought a new section 3 registration for use of vinclozolin on succulent beans. EPA was unable to make the ''reasonable certainty of no harm'' finding mandated by section 408(b)(2) of the FFDCA for a new succulent beans use and associated tolerances if all existing uses remained in place. To reduce aggregate risk posed by exposure to vinclozolin, and thereby enable the Agency to make a ''reasonable certainty of no harm'' finding for succulent beans and the related tolerances, BASF requested the voluntary cancellation of some registered uses.

II. BASF Request to Amend Registrations

On April 30, 1997, BASF submitted a written request to EPA seeking to amend the registrations for vinclozolin. Specifically, BASF requested that EPA delete from registration numbers 7969-53, 7969-57, 7969-62, and 7969-85 the use of vinclozolin on plums, including plums grown for prunes, grapes, tomatoes, residential turf, and turf in parks, school grounds, and recreational areas.

III. Deletions Pursuant to Voluntary Requests

Under section 6(f)(1) of FIFRA, registrants may request at any time that EPA amend a pesticide registration to delete one or more uses (7 U.S.C. 136d(f)(1)). Consistent with 6(f)(1) of FIFRA, EPA is publishing a notice of receipt of the request and allowing 30 days for public comment.

IV. Existing Stocks

Effective immediately, all vinclozolin products being manufactured must reflect the changes described in this notice. Retailers, distributors, and end-users may sell, distribute, or use products with the previously approved labeling which are already in channels of trade until such supplies are exhausted.

V. Proposed Use Deletion

The use deletions will take effect on October 14, 1997 unless before that date EPA publishes a notice in the **Federal Register** modifying this proposed order.

EPA approves BASF's request to delete plums, including plums grown for prunes, grapes, tomatoes, residential turf, and turf in parks, school grounds, and recreational areas from vinclozolin products with EPA registration numbers 7969-53, 7969-57, 7969-62, and 7969-85.

VI. Public Comment Procedures

EPA invites interested parties to submit written comments in response to this notice. Comments must be submitted by September 12, 1997. Comments must bear a document control number. Three copies of the comments should be submitted to either location under ''ADDRESSES'' at the beginning of this notice.

Information submitted as a comment concerning this notice may be claimed confidential by marking any or all that information as Confidential Business Information (CBI). EPA will not disclose information so marked, except in accordance with procedures set forth in 40 CFR part 2. A second copy of such comments, with the CBI deleted, also must be submitted for the public for inclusion in the public record. EPA may publicly disclose without prior notice information not marked confidential.

VII. Rulemaking Record

The official record for this notice, as well as the public version, has been established for this document under docket number ''OPP–66243'' (including comments and data submitted electronically as described below). A public version of this record, including printed, paper versions of electronic comments, which does not include any information claimed as CBI, is available for inspection from 8:30 a.m. to 4 p.m., Monday through Friday, excluding legal holidays. The official record is located at the address in ''ADDRESSES'' at the beginning of this document.

Electronic comments can be sent directly to EPA at:

opp-docket@epamail.epa.gov

Electronic comments must be submitted as an ASCII file avoiding the use of special characters and any form of encryption. Comment and data will also be accepted on disks in Wordperfect 5.1 file format or ASCII file format. All comments and data in electronic form must be identified by the docket number OPP–66243. Electronic comments on this document may be filed online at many Federal Depository Libraries.

List of Subjects

Environmental protection, Administrative practice and procedure, Agricultural commodities, Pesticides and pests, Use deletions.

Dated: August 7, 1997.

Jack E. Housinger,

Acting Director, Special Review and Reregistration Division, Office of Pesticide Programs.

[FR Doc. 97–21411 Filed 8–12–97; 8:45 am]

BILLING CODE 6560–50–F

FEDERAL COMMUNICATIONS COMMISSION

Notice of Public Information Collection(s) Submitted to OMB for Review and Approval

August 7, 1997.

SUMMARY: The Federal Communications Commission, as part of its continuing effort to reduce paperwork burden invites the general public and other Federal agencies to take this opportunity to comment on the following information collection(s), as required by the Paperwork Reduction Act of 1995, Public Law 104–13. An agency may not conduct or sponsor a collection of information unless it displays a currently valid control number. No person shall be subject to any penalty for failing to comply with a collection of information subject to the Paperwork Reduction Act (PRA) that does not display a valid control number. Comments are requested concerning (a) whether the proposed collection of information is necessary for the proper performance of the functions of the Commission, including whether the information shall have practical utility; (b) the accuracy of the Commission's burden estimate; (c) ways to enhance the quality, utility, and clarity of the information collected; and (d) ways to minimize the burden of the collection of

information on the respondents, including the use of automated collection techniques or other forms of information technology.

DATES: Written comments should be submitted on or before September 12, 1997. If you anticipate that you will be submitting comments, but find it difficult to do so within the period of time allowed by this notice, you should advise the contact listed below as soon as possible.

ADDRESSES: Direct all comments to Judy Boley, Federal Communications Commission, Room 234, 1919 M St., N.W., Washington, DC 20554 or via internet to jboley@fcc.gov.

FOR FURTHER INFORMATION CONTACT: For additional information or copies of the information collection(s) contact Judy Boley at 202–418–0214 or via internet at jboley@fcc.gov.

SUPPLEMENTARY INFORMATION:

OMB Approval Number: 3060–0774.

Title: Federal-State Joint Board on Universal Service, CC Docket No. 96–45.

Type of Review: Extension of a currently approved collection.

Respondents: Individuals or households; business or other for-profit; not-for-profit institutions; state or local or tribal government.

Number of Respondents: 5,565,451.

Estimated Time Per Response: 3.1 hours (avg.).

Cost to Respondents: N/A.

Total Annual Burden: 1,784,220 hours.

Needs and Uses: Congress has directed the Commission to implement a new set of universal service support mechanisms that are explicit and sufficient to advance the universal service principles enumerated in Section 254 of the Telecommunications Act of 1996 and such other principles as the Commission believes are necessary and appropriate for the protection of the public interest, convenience and necessity, and are consistent with the Act.

In the Report and Order, the Commission promulgates the rules and requirements to preserve and advance universal service. The collections are necessary to implement Section 254.

Federal Communications Commission.

William F. Caton,

Acting Secretary.

[FR Doc. 97–21367 Filed 8–12–97; 8:45 am]

BILLING CODE 6712–01–P

FEDERAL COMMUNICATIONS COMMISSION

[FCC 97–264]

Supplemental Pleading Cycle Established for Comments on Petition for Declaratory Ruling of the Cellular Telecommunications Industry Association

Released: July 28, 1997.

On December 16, 1996, the Cellular Telecommunications Industry Association (CTIA) filed a Petition for Declaratory Ruling (''CTIA Petition'') requesting that the Commission preempt moratoria imposed by state and local governments on the siting of telecommunications facilities. On December 18, 1996, the Wireless Telecommunications Bureau issued a public notice, 62 FR 04047 (January 28, 1997), seeking comment on the CTIA Petition. CTIA and the supporting commenters contend that the Commission has the jurisdiction under Section 253(a) and 332(c)(3) of the Communications Act to preempt local siting moratoria because such moratoria are not individual land use ''decisions'' or ''disputes,'' which Congress has stated are to be reviewed by the courts under Section 332(c)(7) of the Communications Act, but rather are blanket ordinances that act as barriers to entry.

Following the submission of the comments on the CTIA Petition, representatives from CTIA and four wireless companies made ex parte presentations in which they raised additional issues and arguments. In the ex parte presentations, the representatives recommended that the Commission adopt guidelines for local moratoria. Specifically, they asked that we find that:

(1) All siting moratoria that exceed 90 days (current and prospective) are invalid and preempted as impermissible entry regulation of Commercial Mobile Radio Services (CMRS).

(2) Moratoria of open-ended duration constitute per se violations of Sections 253(a) and 332(c)(3) of the Communications Act.

(3) Moratoria that preclude the filing and processing of applications constitute per se violations.

(4) Moratoria that discriminate against new CMRS providers by allowing certain CMRS licensees to build and modify facilities while new entrants are precluded from deploying services should be declared per se invalid entry regulation.

(5) Moratoria based directly or indirectly on radiofrequency (RF) emissions and related health concerns should be per se preempted.

The Commission also received numerous comments and other ex parte filings arguing that the Commission does not have the jurisdiction to preempt state and local siting moratoria. Most recently, on July 15, 1997, the Commission's Local and State Government Advisory Committee (LSGAC) submitted an ex parte letter in which it argued that Congress had made clear its intent to protect state and local authority over the siting of personal wireless service facilities from interference by the Commission. LSGAC argued that neither Section 332(c)(3)(A) nor Section 253 of the Communications Act govern the adoption of siting moratoria by local governments. LSGAC contends that Section 332(c)(7) of the Communications Act provides that it is the only section of the Act that affects local land use authority over personal wireless service facilities and that Section 332(c)(7) reserves to courts of competent jurisdiction the settlement of local zoning disputes.

Based on our review of the record received in response to the CTIA Petition and the subsequent ex parte filings, we tentatively conclude that, pursuant to Sections 253(d) and 332(c)(3) of the Communications Act, we have the authority to consider whether local facility siting moratoria may prohibit or have the effect of prohibiting the ability of wireless service providers to offer service in violation of Section 253(a) or whether moratoria constitute local regulation of CMRS entry prohibited by Section 332(c)(3). We recognize that, pursuant to Section 332(c)(7)(B)(v), parties adversely affected by decisions regarding the placement, construction, and modification of personal wireless service facilities that are inconsistent with the limitations set forth in Sections 332(c)(7)(B)(i)-(iii) are directed to seek relief from a ''court of competent jurisdiction.'' We believe that Section 332(c)(7)(B)(v) does not, however, limit our authority to review local facility siting moratoria which may constitute entry barriers under Sections 253(d) or entry regulations under 332(c)(3). In this regard, certain moratoria, especially moratoria of unlimited duration, may constitute impermissible CMRS entry regulation or may prohibit or have the effect of prohibiting CMRS entry into a local marketplace. Accordingly, to the extent that moratoria of unlimited or unspecified duration may constitute barriers to the provision of telecommunications services, we believe that we have the jurisdiction to preclude such moratoria under Section

253(d) of the Communications Act and to the extent that such moratoria may constitute prohibited CMRS entry regulation, we believe that we have the jurisdiction to preclude them under Section 332(c)(3). In this regard, we tentatively conclude that moratoria that do not specify any fixed length of duration are not ''decisions'' regarding the placement, construction and modification of personal wireless facilities which, pursuant to Section 332(c)(7)(A) of the Communications Act, are subject to review by the courts. At the same time, we recognize that a moratorium of a fixed duration, which permits local officials a reasonable period of time to study and develop a process for handling wireless siting requests may be a legitimate exercise of local land use authority which may benefit all parties. Therefore, we tentatively conclude that Sections 253(d) and 332(c)(3) do not preclude all local facilities siting moratoria and that some moratoria of a relatively short and fixed duration may serve the public interest.

Through this supplemental public notice, we tentatively conclude that we should preclude local facilities siting moratoria of unlimited or unspecified duration as impermissible CMRS entry regulation in violation of Section 332(c)(3) or barriers to entry under Section 253(a) and seek comment on this tentative conclusion. We also seek comment on whether moratoria of a specified duration, but which exceed a certain length of time, may also constitute impermissible barriers to entry or CMRS entry regulation. If so, at what length of time do moratoria become barriers to entry? We note that CTIA and the supporting parties have argued that moratoria should not exceed 90 days. In Sprint Spectrum, L.P. v. City of Medina, a federal district court found that a city's six month moratorium on the issuance of new special use permits for wireless communications facilities did not violate Section 332(c)(3) or 332(c)(7)(A) of the Communications Act. We seek comment as to what constitutes a reasonable period of time to permit local land use authorities to organize their siting efforts and analyze the situation. We request that all commenters supporting a specific length of time provide a detailed justification for that length of time, and we request that state and local governments advocating moratoria of a certain length of time include evidence as to the length of time it has taken historically to develop a process for handling wireless siting requests. We seek to determine also whether such limits should be applied to all existing moratoria or only to moratoria that are adopted in the future.

In addition, we seek comment as to whether moratoria that are imposed only against the siting of wireless facilities of new CMRS entrants but that permit existing CMRS operators to construct or modify facilities are consistent with Sections 253(a) and 332(c)(3) of the Communications Act. We seek to determine whether such disparate treatment constitutes discrimination against new CMRS providers and is, therefore, invalid entry regulation, or prohibits or has the effect of prohibiting entry.

Finally, we tentatively conclude that moratoria that would otherwise comply with the above-outlined limitations may violate Section 332(c)(7)(B)(iv) of the Communications Act if they are based upon concerns regarding the environmental effects of RF emissions. We seek comment on this tentative conclusion.

Interested parties should file comments on the issues raised in this Public Notice on or before September 11, 1997, and should file reply comments on or before September 26, 1997. Comments and reply comments must be filed with the Secretary, FCC 1919 M Street, N.W., Washington, DC 20554. One copy of comments and reply comments should be sent to Shaun A. Maher, Esq., Policy & Rules Branch, Commercial Wireless Division, Wireless Telecommunications Bureau, Seventh Floor—Room 93, 2100 M Street, N.W., Washington, DC 20554. One copy should also be sent to the Commission's contractor for public service records duplication, International Transcription Service, Inc. (ITS), 1231 20th Street, N.W., Washington, DC 20036. Parties filing comments in this non-docketed proceeding should include the internal reference numbers, DA 96–2140 and FCC 97–264, on their pleadings.

Parties are encouraged to submit comments and reply comments on diskette. Such diskette submissions would be in addition to and not a substitute for the formal filing requirements presented above. Parties submitting diskettes should submit them to Shaun A. Maher, at the above-outlined address. Such a submission should be on a 3.5 inch diskette formatted in an IBM compatible form using Word Perfect 5.1 for Windows software. The diskette should be submitted in ''read only'' mode, and should be clearly labelled with the party's name, proceeding, type of pleading (comment or reply comment) and date of submission.

The full text of all comments and reply comments will be available for inspection and duplication during regular business hours in the Commercial Wireless Division Public Reference Room, 2025 M Street, N.W., Room 5608, Washington, D.C. 20554. Copies may also be obtained from International Transcription Service, Inc. (ITS), 1231 20th Street, N.W., Washington, D.C. 20036, (202) 857–3800.

We will continue to treat this proceeding as permit-but-disclose for purposes of the Commission's ex parte rules. See generally 47 CFR §§ 1.1200–1.1216.

For further information, contact Shaun A. Maher of the Wireless Telecommunications Bureau, at 202–418–7240 (email: smaher@fcc.gov).

Federal Communications Commission.

William F. Caton,

Acting Secretary.

[FR Doc. 97–21372 Filed 8–12–97; 8:45 am]

BILLING CODE 6712–01–P

FEDERAL EMERGENCY MANAGEMENT AGENCY

FEMA Invites State, Tribal, and Local Government Representation in the Radiological Emergency Preparedness (REP) Program Strategic Review

AGENCY: Federal Emergency Management Agency (FEMA).

ACTION: Notice.

SUMMARY: Under the authority of the Unfunded Mandates Reform Act of 1995 and in order to gather information pursuant to the REP Program strategic review, FEMA has sent out letters inviting States and Indian Tribal nations impacted by the REP Program to designate representatives to assist FEMA in its REP Program strategic review. The designated representatives may be asked to serve on issue teams, contribute ideas toward refining FEMA's exercise evaluation methodology, participate in a focus group discussion that addresses new REP Program recommendations, or participate in conference calls.

FOR FURTHER INFORMATION CONTACT: D. Anne Martin, Deputy Director, Exercises Division, Preparedness, Training and Exercises Directorate, Federal Emergency Management Agency, 500 C Street SW., Washington, DC 20472, (202) 646–2738.

Dated: August 1, 1997.

Kay C. Goss,

Associate Director.

[FR Doc. 97–21383 Filed 8–12–97; 8:45 am]

BILLING CODE 6718–06–P

FEDERAL MARITIME COMMISSION

Notice of Agreement(s) Filed

The Commission hereby gives notice of the filing of the following agreement(s) under the Shipping Act of 1984.

Interested parties can review or obtain copies of agreements at the Washington, DC offices of the Commission, 800 North Capitol Street, N.W., Room 962. Interested parties may submit comments on an agreement to the Secretary, Federal Maritime Commission, Washington, DC 20573, within 10 days of the date this notice appears in the **Federal Register**.

Agreement No.: 217–011585.

Title: APL–NOL Cross-Utilization Agreement.

Parties: American President Lines, Ltd. Neptune Orient Lines, Ltd.

Synopsis: The proposed Agreement would permit the parties to charter space to one another aboard vessels operated by each of them and aboard vessels operated by third parties on which the other party has chartered space in the trade between United States ports and ports in the Far East in the Siberia/Pakistan Range.

Agreement No.: 224–002758–015.

Title: Port of Oakland/APL Terminal Agreement.

Parties: City of Oakland (''Port'') American President Lines, Ltd. (''APL'').

Synopsis: The proposed modification amends the definition of primary and secondary use, in order to facilitate the operations of the ''global alliance'' in which APL has entered with certain other shipping lines.

Agreement No.: 224–003038–005.

Title: Oakland/American President Lines Terminal Agreement.

Parties: Port of Oakland American President Lines, Ltd (''APL'').

Synopsis: The Amendment modifies the basic Agreement with respect to the definition of primary and secondary use in order to facilitate the operations of the Global Alliance (FMC Agreement No. 203–011468) to which APL is a party.

Agreement No.: 224–201012–001.

Title: Nonexclusive Preferential Crane Assignment Agreement Between Port of Oakland and American President Line, Ltd.

Parties: Port of Oakland ''Port'' American President Lines, Ltd. (''APL'').

Synopsis: The proposed Amendment provides that the Port shall sell to APL three (3) container handling cranes, together with certain space parts (''Equipment'') at Berths 60–63 in the Port's Middle Harbor Terminal Area.

Agreement No.: 224–201032.

Title: Port of Palm Beach/Teeters Brothers Lease Agreement.

Parties: Port of Palm Beach District (''Port'') Teeters Brothers Contracting Corporation (''Teeters Brothers'').

Synopsis: The proposed Agreement authorizes the Port to lease to Teeters Brothers 7,920 square feet of Warehouse A, The Mullins Property, the Interim Property, and the South-East Perry Property, for a period of three years.

Dated: August 7, 1997.

By Order of the Federal Maritime Commission.

Joseph C. Polking,

Secretary.

[FR Doc. 97–21351 Filed 8–12–97; 8:45 am]

BILLING CODE 6730–01–M

FEDERAL RESERVE SYSTEM

Sunshine Act Meeting

Agency Holding the Meeting: Board of Governors of the Federal Reserve System.

Time and Date: 11:00 a.m., Monday, August 18, 1997.

Place: Marriner S. Eccles Federal Reserve Board Building, C Street entrance between 20th and 21st Streets, N.W., Washington, D.C. 20551.

Status: Closed.

Matters to be Considered:

1. Proposal regarding a software contract within the Federal Reserve System.

2. Personnel actions (appointments, promotions, assignments, reassignments, and salary actions) involving individual Federal Reserve System employees.

3. Any items carried forward from a previously announced meeting.

CONTACT PERSON FOR MORE INFORMATION: Mr. Joseph R. Coyne, Assistant to the Board; (202) 452–3204. You may call (202) 452–3207, beginning at approximately 5 p.m. two business days before this meeting, for a recorded announcement of bank and bank holding company applications scheduled for the meeting.

Dated: August 8, 1997.

Jennifer J. Johnson,

Deputy Secretary of the Board.

[FR Doc. 97–21454 Filed 8–8–97; 4:33 pm]

BILLING CODE 6210–01–P

GENERAL SERVICES ADMINISTRATION

Budget Concepts Branch; Cancellation of Standard Form

AGENCY: Office of Management and Budget.

ACTION: Notice.

SUMMARY: The following Standard Form is cancelled: SF 132, Apportionment and Reapportionment Schedule. This form is replaced by a format prescribed in OMB Circular A–34.

DATES: Effective August 13, 1997.

FOR FURTHER INFORMATION CONTACT:

Ms. Betty Ing Bradshaw, Office of Management and Budget, (202) 395–3146.

Dated: July 24, 1997.

Barbara M. Williams,

Deputy Standard and Optional Forms Management Officer.

[FR Doc. 97–21417 Filed 8–12–97; 8:45 am]

BILLING CODE 6820–34–M

GENERAL SERVICES ADMINISTRATION

Office of Acquisition Policy, FAR Secretariat; Revision of SF 129, Solicitation Mailing List Application

AGENCY: General Services Administration.

ACTION: Notice.

SUMMARY: The General Services Administration/FAR Secretariat has revised SF 129, Solicitation Mailing List Application.

The form is now authorized for local reproduction. You can obtain the updated camera copy in three ways:

On the internet. Address: http://www.gsa.gov/forms;

From CARM, Attn.: Barbara Williams, (202) 501–0581; or

From the ''U.S. Government Management Policy CD-ROM.

FOR FURTHER INFORMATION CONTACT: FAR Secretariat, (202) 501–4755.

DATES: Effective August 13, 1997.

Dated: July 31, 1997.

Barbara M. Williams,

Deputy Standard and Optional Forms Management Officer.

[FR Doc. 97–21414 Filed 8–12–97; 8:45 am]

BILLING CODE 6820–34–M

GENERAL SERVICES ADMINISTRATION

[OMB Control No. 3090–0023]

Proposed Collection; Comment Request Entitled Surplus Personal Property Mailing List Application

AGENCY: Property Management Division (FBP), GSA.

ACTION: Notice of request for public comments regarding reinstatement to a previously approved OMB clearance (3090–0023).

SUMMARY: Under the provisions of the Paperwork Reduction Act of 1995 (44 U.S.C. Chapter 35), the Office of Acquisition Policy has submitted to the Office of Management and Budget (OMB) a request to review and approve a reinstatement of a previously approved information collection requirement concerning Surplus Personal Property Mailing List.

DATES: Comment Due Date: October 14, 1997.

ADDRESSES: Comments regarding this burden estimate or any other aspect of this collection of information, including suggestions for reducing this burden, should be submitted to: Edward Springer, GSA Desk Officer, Room 3235, NEOB, Washington, DC 20503, and to Marjorie Ashby, General Services Administration (MVP), 1800 F Street NW, Washington, DC 20405.

FOR FURTHER INFORMATION CONTACT: Lynne Price, (703) 308–0643.

SUPPLEMENTARY INFORMATION:

A. Purpose

The GSA is requesting the Office of Management and Budget (OMB) to reinstate information collection, 3090–0023, concerning Surplus Personal Property Mailing List. The GSA Form 2170 is completed by persons who wish to have their names placed on the Surplus Personal Property Mailing List maintained by GSA Regional Sales Offices. Mailing labels are produced based on the type of property and geographical area indicated by the prospective bidder on the mailing list application.

B. Annual Reporting Burden

Respondents: 35,000; annual responses: 35,000; average hours per response: .083; burden hours: 2905.

Copy of Proposal: A copy of this proposal may be obtained from the GSA Acquisition Policy Division (MVP), Room 4011, GSA Building 1800 F Street NW., Washington, DC 20405, or by telephoning (202) 501–3822, or by faxing your request to (202) 501–3341.

Dated: August 4, 1997.

Ida M. Ustad,

Deputy Associate Administrator, Office of Acquisition Policy.

[FR Doc. 97–21415 Filed 8–12–97; 8:45 am]

BILLING CODE 6820–61–M

GENERAL SERVICES ADMINISTRATION

[OMB Control No. 3090–0007]

Proposed Collection; Comment Request Entitled Contractor's Qualifications and Financial Information

AGENCY: Office of Chief Financial Officer (B), GSA.

ACTION: Notice of request for public comments regarding reinstatement to a previously approved OMB clearance (3090–0007).

SUMMARY: Under the provisions of the Paperwork Reduction Act of 1995 (44 U.S.C. Chapter 35), the Office of Acquisition Policy has submitted to the Office of Management and Budget (OMB) a request to review and approve a reinstatement of a previously approved information collection requirement concerning Contractor's Qualifications and Financial Information.

DATES: Comment Due Date: October 14, 1997.

ADDRESSES: Comments regarding this burden estimate or any other aspect of this collection of information, including suggestions for reducing this burden, should be submitted to: Edward Springer, GSA Desk Officer, Room 3235, NEOB, Washington, DC 20503, and to Marjorie Ashby, General Services Administration (MVP), 1800 F Street NW, Washington, DC 20405.

FOR FURTHER INFORMATION CONTACT: Ronald Smeltzer, (202) 501–1676.

SUPPLEMENTARY INFORMATION:

A. Purpose

The GSA is requesting the Office of Management and Budget (OMB) to reinstate information collection, 3090–0007, Contractor's Qualifications and Financial Information. This form is used to determine the financial capability of prospective contractors as to whether they meet the financial responsibility standards in accordance with the Federal Acquisition Regulation (FAR) and the General Services Administration Acquisition Regulation (GSAR).

B. Annual Reporting Burden

Respondents: 5,822; annual responses: 6,986; average hours per response: 2.5; burden hours: 17,465.

Copy of Proposal: A copy of this proposal may be obtained from the GSA Acquisition Policy Division (MVP), Room 4011, GSA Building, 1800 F Street NW, Washington, DC 20405, or by telephoning (202) 501–3822, or by faxing your request to (202) 501–3341.

Dated: August 4, 1997.

Ida M. Ustad,

Deputy Associate Administrator, Office of Acquisition Policy.

[FR Doc. 97–21416 Filed 8–12–97; 8:45 am]

BILLING CODE 6820–61–M

DEPARTMENT OF HEALTH AND HUMAN SERVICES

Food and Drug Administration

Advisory Committee; Notice of Meeting

AGENCY: Food and Drug Administration, HHS.

ACTION: Notice.

This notice announces a forthcoming meeting of a public advisory committee of the Food and Drug Administration (FDA). The meeting will be open to the public.

Name of Committee: Dermatologic and Ophthalmic Drugs Advisory Committee.

General Function of the Committee: To provide advice and recommendations to the agency on FDA regulatory issues.

Date and Time: The meeting will be held on September 4 and 5, 1997, 8:30 a.m. to 5:30 p.m.

Location: Holiday Inn, Versailles Ballrooms I, II, and III, 8120 Wisconsin Ave., Bethesda, MD.

Contact Person: Tracy Riley or John B. Schupp, Center for Drug Evaluation and Research (HFD–21), Food and Drug Administration, 5600 Fishers Lane, Rockville, MD 20857, 301–443–5455, or FDA Advisory Committee Information Line, 1–800–741–8138 (301–443–0572 in the Washington, DC area), code 12534. Please call the Information Line for up-to-date information on this meeting.

Agenda: The committee will hear presentations and discuss data submitted regarding the new drug application (NDA) 20–785, Synovir™ (thalidomide capsules, Celgene Corp.), for treatment of erythema nodosum leprosum.

Procedure: Interested persons may present data, information, or views,

orally or in writing, on issues pending before the committee. Written submissions may be made to the contact person by August 22, 1997. Oral presentations from the public will be scheduled between approximately 8:30 a.m. to 9 a.m., and between approximately 1 p.m. to 2 p.m. on September 4, 1997. Time allotted for each presentation may be limited. Those desiring to make formal oral presentations should notify the contact person before August 22, 1997, and submit a brief statement of the general nature of the evidence or arguments they wish to present, the names and addresses of proposed participants, and an indication of the approximate time requested to make their presentation. The agency encourages investigators, academicians, members of the pharmaceutical industry, consumer groups, and others with information relevant to the topic to respond to the contact person.

Notice of this meeting is given under the Federal Advisory Committee Act (5 U.S.C. app. 2).

Dated: August 7, 1997.

William B. Schultz,

Acting Lead Deputy Commissioner.

[FR Doc. 97–21434 Filed 8–12–97; 8:45 am]

BILLING CODE 4160–01–F

DEPARTMENT OF HEALTH AND HUMAN SERVICES

Food and Drug Administration

Advisory Committee; Notice of Meeting

AGENCY: Food and Drug Administration, HHS.

ACTION: Notice.

This notice announces a forthcoming meeting of a public advisory committee of the Food and Drug Administration (FDA). At least one portion of the meeting will be closed to the public.

Name of Committee: Hematology and Pathology Devices Panel of the Medical Devices Advisory Committee.

General Function of the Committee: To provide advice and recommendations to the agency on FDA regulatory issues.

Date and Time: The meeting will be held on September 5, 1997, 10 a.m. to 5 p.m.

Location: Corporate Bldg., conference room 020B, 9200 Corporate Blvd., Rockville, MD.

Contact Person: Veronica J. Calvin, Center for Devices and Radiological Health (HFZ–440), Food and Drug Administration, 2098 Gaither Rd., Rockville, MD 20850, 301–594–1243, or FDA Advisory Committee Information Line, 1–800–741–8138 (301–443–0572 in the Washington, DC area), code 12515. Please call the Information Line for up-to-date information on this meeting.

Agenda: The committee will discuss quality control issues for home-use prothrombin time devices.

Procedure: On September 5, 1997, from 10:30 a.m. to 5 p.m., the meeting is open to the public. Interested persons may present data, information, or views, orally or in writing, on issues pending before the committee. Written submissions may be made to the contact person by August 22, 1997. Oral presentations from the public will be scheduled between approximately 11 a.m. and 12:15 p.m. Time allotted for each presentation may be limited. Those desiring to make formal oral presentations should notify the contact person before August 22, 1997, and submit a brief statement of the general nature of the evidence or arguments they wish to present, the names and addresses of proposed participants, and an indication of the approximate time requested to make their presentation.

Closed committee deliberations. On September 5, 1997, from 10 a.m. to 10:30 a.m., the meeting will be closed to permit discussion and review of trade secret and/or confidential information. (5 U.S.C. 552b(c)(4)). FDA staff will present trade secret and/or confidential commercial information regarding present or future issues.

Notice of this meeting is given under the Federal Advisory Committee Act (5 U.S.C. app. 2).

Dated: August 11, 1997.

Michael A. Friedman,

Deputy Commissioner for Operations.

[FR Doc. 97–21552 Filed 8–12–97; 8:45 am]

BILLING CODE 4160–01–F

DEPARTMENT OF HEALTH AND HUMAN SERVICES

National Institutes of Health

Government-Owned Inventions; Availability for Licensing

AGENCY: National Institutes of Health.

ACTION: Notice.

SUMMARY: The inventions listed below are owned by agencies of the U.S. Government and are available for licensing in the U.S. in accordance with 35 U.S.C. 207 to achieve expeditious commercialization of results of federally funded research and development. Foreign patent applications are filed on selected inventions to extend market coverage for U.S. companies and may also be available for licensing.

ADDRESSES: Licensing information and copies of the U.S. patent applications listed below may be obtained by writing to the indicated licensing contact at the Office of Technology Transfer, National Institutes of Health, 6011 Executive Boulevard, Suite 325, Rockville, Maryland 20852–3804; telephone: 301/496–7057; fax: 301/402–0220. A signed Confidential Disclosure Agreement will be required to receive copies of the patent applications.

Dvl1-Deficient Mice

AJ Wynshaw-Boris, N Lijam, D Sussman, R Paylor, J Crawley (NHGRI)

OTT Reference No. E–100–97/0

Licensing Contact: David Sadowski; *phone:* 301/496–7735 ext. 288; *e-mail:* DS27A@NIH.GOV

Genetic factors are important modifiers of a variety of simple and complex behaviors in virtually all organisms. Genetic effects have been inferred from inbred strain analysis in rodents and from linkage analysis in rodents and humans. More recently, genes influencing specific behaviors have been identified by analyzing behavioral abnormalities in mice with targeted gene disruption.

In the present invention, mice completely deficient for Dvl1, a mouse homolog of the Drosophila segment polarity gene Dishevelled, were created by gene targeting. These mice demonstrate that Dvl1 participates in complex behaviors in mammals. Dvl1-deficient mice exhibit reduced social interaction, including differences in whisker-trimming, deficits in nest-building, less huddling contact during home cage sleeping, and subordinate responses in a social dominance test. In addition, Dvl1-deficient mice display striking abnormalities in sensorimotor gating, as indicated by attenuation of prepulse startle inhibition in the mutant mice. Prepulse inhibition is abnormal in several human neuropsychiatric disorders including schizophrenia, schizotypal personality disorders, obsessive-compulsive disorders, Huntington's disease, and Tourette syndrome. In addition, many of these disorders (as well as autism) are characterized by abnormal social interaction. Hence, Dvl1-deficient mice provide a genetic animal model of aspects of several human psychiatric disorders and serve as a useful model for screening drugs that modify

abnormal social interaction and sensorimotor gating.

Transgenic and Chimeric Viral Delivery Systems

WJ Ramsey, RM Blaese (NHGRI)

OTT Reference No. E–011–97/0 filed 11 Apr 97

Licensing Contact: Larry Tiffany; *phone:* 301/496–7056 ext. 206; *e-mail:* LT10X@NIH.GOV

The development of eukaryotic viral vectors has generally focused on delivery of one or more heterologous genes to target cells, particularly for gene therapy. Such development has primarily involved vector systems utilizing retrovirus, adenovirus, herpes virus, vaccinia virus, and adeno-associated virus particles. However, each of these viral vector systems has presented one or more of several obstacles including low viral titers, induced host immune responses, inefficient transduction, and transient expression of the desired heterologous gene. This invention addresses the need for improved eukaryotic viral vectors for diagnostic applications and for delivering heterologous genes to cells *in vitro*, *ex vivo*, and *in vivo*.

The present invention provides a system for the production of viral vectors (secondary viruses) whose genome is encoded within another virus with a different life cycle and biologic characteristics (primary virus). For example, chimeric primary viruses with high transduction efficiencies (adenoviruses) can be used to direct the production of secondary viruses (retroviruses) in a wide range of producer cell types. Thus single (or panels of) secondary viral vectors containing identical secondary vector genomes can easily and rapidly be produced in retroviral vector packaging cells containing different envelope targeting components with the additional advantage that there will be little chance for vector rearrangement or recombination. Secondary viruses also can be readily produced in cells obtained from the eventual gene therapy target species so that enveloped viruses will contain membrane constituents from the same, rather than a xenogeneic species, lessening the chance for neutralizing immune responses to the vectors. Similarly, serum complement-mediated lysis of retroviral vectors may be eliminated by the ability to easily use vector producer cells from the same species as the species to be treated by gene therapy. Such secondary viruses may comprise an expression cassette constituting a nucleic acid encoding a heterologous protein and/or an antisense nuclei acid. Hence, this invention overcomes obstacles occurring with the *in vitro*, *ex vivo*, and *in vivo* use of common viral vector systems. In addition, these chimeric primary viruses can be used to rescue unknown viral genomes from host cells for use in the development of diagnostic tests or in the development of novel viral vector systems.

MEN1, The Gene For Multiple Endocrine Neoplasia Type 1

SC Chandrasekharappa (NHGRI), AM Spiegel (NIDDK), LA Liotta (NCI) et al.

OTT Reference No. E–094–97/0 filed 05 Mar 97

Licensing Contact: Ken Hemby; *phone:* 301/496–7735 ext. 265; *e-mail:* JH259B@NIH.GOV

Multiple endocrine neoplasia type 1 (MEN1) is an autosomal dominant familial cancer syndrome characterized by occurrence of tumors in parathryroids, enteropancreatic endocrine tissues, the anterior pituitary, and occasionally other sites. The present invention provides an isolated DNA sequence encoding a gene which when mutated in the germline is associated with the development of MEN1. This invention also comprises polyclonal and monoclonal antibodies which selectively bind to menin, the protein encoded by MEN1. In addition, the present invention provides methods for immunological detection of menin in biological samples as well as methods for detecting the presence, alteration, or absence of MEN1 DNA or RNA. This research has been published in Science 276: 404–407 (1997).

Potential areas of application of this invention include sporadic and familial MEN1 diagnostics using immunoassays and nucleic acid hybridizations, and gene therapy.

Invaginated Liposome Delivery System

N Smyth-Templeton, GN Pavlakis (NCI)

Serial No. 60/024,386 Filed 19 Aug 96

Licensing Contact: Larry Tiffany; *phone:* 301/496–7056 ext. 206; *e-mail:* LT10X@NIH.GOV

Liposome formulations for in vivo delivery are valuable alternatives to viral vectors and avoid the inherent problems associated with modifying viral genomes to create expression vehicles. Previous liposome formulations limited therapeutic efficacy due to generally low expression of the DNA being delivered. In contrast, these novel liposomes are able to transfect a broad host range and express the encoded proteins at high titers.

The present technology involves highly efficient cationic liposomes for increased in vivo delivery of biologically active agents. These extruded DOTAP:cholesterol complexes allow gene expression to be improved up to 150-fold over previous liposomes. This improvement is due to the novel morphology of the DNA:liposome complexes. The complexes are vaselike structures which invaginate and condense DNA between two protective lipid bilayers. Because the outside of the DNA:liposome complexes is substantially free of DNA, targeting ligands may be placed on the outside of the complexes, without compromising the effect of the targeting ligand or the ability of DNA to be delivered and expressed.

The present technology may be used for: systematic or site-specific delivery and expression of nucleic acid products; production of kits capable of carrying any biologically active agent; delivery of reagents for human gene therapy in the treatment of disease; and providing a method for long term expression of a gene product from a non-integrated nucleic acid.

Licensees are currently being sought for all therapeutic applications.

In Vitro Determination Of CD4+ T Cell Depletion In HIV–1 Seropositive Subjects as a Predictor of Future CD4+ T Cell Decline In Vivo

D Zella, A Riva, M Reitz (NCI)

OTT Reference No. E–061–96/0

Licensing Contact: George Keller; *phone:* 301/496–7735 ext. 246; *e-mail:* GK40J@NIH.GOV

The current invention embodies a prognostic method for determining whether an asymptomatic HIV–1 seropositive individual is a progressor or a non-progressor to AIDS. The inventors have discovered that in HIV–1 seropositive persons in the asymptomatic stage of the disease, peripheral blood mononuclear cells (PBMCs) respond in one of two ways when isolated and subsequently activated in vitro by IL–2. Either (1) the CD3+CD4+ cell number increases in culture (non-progressor subjects) or (2) the CD3+CD4+ number does not increase or decreases in culture (progressor subjects). This analysis was performed by an automated flow cytometer. This method, when developed as a commercially-available test, may represent an economical and accurate assay to determine when detrimental changes for the immune system occur in asymptomatic HIV–1 seropositive subjects, and for this reason to predict whether an individual is

progressing to AIDS. This assay may therefore be a valuable tool to use in determining the appropriate course of therapy to target not only HIV–1 replication but also to monitor the effects of therapeutic drugs on the host immune system response.

Avian Based Retrovirus Vectors

E Barsov, SH Hughes (NCI)

Serial No. 08/445,462 filed 22 May 95

Licensing Contact: Larry Tiffany; *phone:* 301/496–7056 ext. 206; *e-mail:* LT10X@NIH.GOV

Recombinant retrovirus vectors based on the Rous sarcoma virus (RSV) are valuable alternatives to murine based or replication-defective vectors because they do not require a packaging or helper cell line. Previous RSV vectors limited efficacy due to their inability to infect a broad range of mammalian species. In contrast, these novel vectors are able to infect a wider range of host at high titers while remaining inherently defective in mammalian cells.

The present technology involves recombinant avian sarcoma leukosis virus (ASLV) derived retroviral vectors having an expanded host range. Specifically, the ASLV envelope gene is replaced by the env region derived from a virus capable of infecting both mammalian and avian cells. This improvement allows the vectors to produce high titer stock in avian cells and the resulting virus can infect both avian and mammalian species efficiently.

The present technology may be used for in vitro and in vivo delivery of nucleic acid sequences to avian or mammalian cells and for treatment or prevention of diseases involving transfer by recombinant retroviral vectors.

Licensees are currently being sought for all therapeutic applications.

Nucleotide and Deduced Amino Acid Sequences of a New Tumor Gene, Int6

R Callahan, A Marchetti, F Buttitta, G Smith (NCI)

OTT Reference Nos. E–265–94/0 and E–265–94/1

Licensing Contact: Ken Hemby; *phone:* 301/496–7735 ext. 265; *e-mail:* JH259B@NIH.GOV

Murine retroviruses have been useful in the identification of mammalian genes involved in tumor development. Five loci have been previously identified as integration sites for one specific retrovirus, mouse mammary tumor virus (MMTV). This work describes a sixth site of integration for MMTV, the Int6 gene. The Int6 gene is highly conserved among vertebrate species, including humans. This invention embodies a series of reagents derived from the nucleic acid and amino acid sequences of the Int6 gene and the use of these reagents in diagnostic methods, immunotherapy, gene therapy, and as vaccines.

N-(1-thienylcycloalkyl)alkenyl-amines For Treatment Of Neurotoxic Injury

KC Rice, AE Jacobson, A Thurkauf, MV Mattson, TL O'Donohue, PC Contreras, NM Gray (NIDDK)

Serial No. 08/344,433 Filed 23 November 94; U.S. Patent 5,604,255 issued 18 February 97

Licensing Contact: Leopold Luberecki, Jr.; *phone:* 301/496–7735 ext. 223; *e-mail:* LL87A@NIH.GOV

This invention describes compounds, compositions, and methods for neuroprotective purposes such as controlling brain damage which occurs during periods of anoxia, or ischemia associated with stroke, cardiac arrest or perinatal asphyxia. The treatment includes administration of an N-(1-thienylcycloalkyl) alkylamine compound as an antagonist to inhibit excitotoxic actions at major neuronal excitatory amino acid receptor sites. Compounds of most interest are described in detail.

Brain tissue is particularly sensitive to deprivation of oxygen or energy; permanent damage to neurons can occur during brief periods of hypoxia, anoxia or ischemia. Neurotoxic injury is known to be caused or accelerated by certain excitatory amino acids (EAA) found naturally in the central nervous system. Neurons, which have EEA receptors on their dendritic or somal surface, undergo acute excitotoxic degeneration when these receptors are excessively activated by glutamate. Thus agents which selectively block or antagonize the action of glutamate at the EAA synaptic receptors of central neurons can prevent neurotoxic injury associated with anoxia, hypoxia or ischemia caused by stroke, cardiac arrest or perinatal asphyxia.

The method embodied in the invention may prove valuable for the control of neuropathological processes and the neurodengenerative consequences thereof in mammals by treating a mammal susceptible to neurotoxic injury with an anti-excitotoxic effective amount of a compound of a class described herein.

A Method for the Liposomal Delivery of Nucleic Acids

AR Thierry (NCI)

Serial No. 08/286,730 Filed 05 August 94 and Serial No. 08/522,246 Filed 04 September 95 (CIP of 08/286,730)

Licensing Contact: Larry Tiffany; *phone:* 301/496–7056 ext. 206; *e-mail:* LT10X@NIH.GOV

The present invention is directed to a liposomal preparation of nucleic acids or analogues and specific lipids which form liposomes. Liposome vesicles are prepared from a mixture of cationic lipopolyamine and a neutral lipid. Nucleic acids are associated with the liposomes in two ways: (1) Complex formation between the cationic lissome vesicle and negatively charged nucleic acid or (2) partial encapsulation and partial complex formation in and with the cationic liposome vesicle. Liposome-encapsulated nucleic acids have been shown to be more efficient in transducing cells in cell cultures. Sonication of liposome-complexed nucleic acids allow for more homogenized and smaller liposome particles, and consequently for the ability to circulate for longer periods in blood following systemic injection. Nucleic acids associated with the liposomal carrier are completely protected from enzymatic attack such as nucleases, and stability in circulating blood after administration can be achieved. The present invention provides for the highly efficient delivery of nucleic acids to cells *in vitro* or *in vivo.* Therefore, this invention provides a method for gene therapy. This liposome method does not have safety concerns associated with gene therapy based upon viral vectors. However, liposomal delivery in accordance with the present invention may be used for increasing recombinant retrovirus infection by enhancing the penetration and/or expression of the viral agents.

The patent application includes claims to liposome compositions and method of use. These materials and methods are useful in the delivery of nucleic acids to cells and tissues.

Nitrogen-Containing Cyclohetero Alkylamino Aryl Derivatives for CNS Disorders

BR De Costa, WD Bowen, X-S He, L Radesca, KC Rice (NIDDK)

Serial No. 08/261,796 Filed 20 June 94; U.S. Patent 5,571,832 Issued 05 Nov 96

Licensing Contact: Leopold Luberecki, Jr.; *phone:* 301/496–7735 ext. 223; *e-mail:* LL87A@NIH.GOV

This invention describes a class of therapeutically useful compounds

comprising a pyrrolidinyl ring, compositions and methods for treatment of Central Nervous System (CNS) dysfunctions, neurotoxic damage, or neurodegenerative diseases. These compounds are particularly useful for treating neurotoxic injury which follows periods of hypoxia, anoxia or ischemia associated with stroke, cardiac arrest or perinatal asphyxia. In addition these compounds are also useful as antipsychotics and anticonvulsives.

Unlike other tissues which can survive extended periods of hypoxia, brain tissue is particularly sensitive to deprivation of oxygen or energy. Permanent damage to neurons can occur during brief periods of hypoxia, anoxia or ischemia. Neurotoxic injury is known to be caused or accelerated by certain excitatory amino acids (EAA) found naturally in the CNS. Compounds as described herein block the action of EEA synaptic receptors and thus can prevent neurotoxic injury.

Treatment of CNS disorders and diseases such as cerebral ischemia, psychotic disorders, convulsions and parkinsonism, as well as prevention of neurotoxic damage and neurodegenerative diseases, may be accomplished by administration of a therapeutically-effective amount of a compound of a class described herein.

Severe Renal Glomerular Disease in Mice Homozygous for Targeted Disruption of Uteroglobin Gene: A Model for Human Hereditary Glomerulopathies

AB Mukherjee, Z Zhang (NICHD)

OTT Reference No. E–164–96/0

Licensing Contact: David Sadowski; *phone:* 301/496–7735 ext. 288; *e-mail:* DS27A@NIH.GOV

Uteroglobin (UG) is a protein fraction of pregnant uterine fluid which can induce and regulate blastocystic development and also possesses important anti-inflammatory properties. This invention describes a novel physiological function of UG, which is its role in preventing severe fibronectin (Fn) deposit-associated renal glomerular disease. Uteroglobin binds to Fn thereby inhibiting the formation of Fn-Fn aggregates and Fn-collagen aggregates, thus preventing the disease. Uteroglobin knockout mice (UG-/-) were generated by targeted disruption of the UG gene. These mice developed glomerular disease, became cachectic and died within 4–5 weeks after birth.

This mouse could potentially be a valuable model system for the study and treatment of glomerular disease.

A description of this research may be found in Science, vol. 276, pp. 1408–1412, 1997.

A Method for Producing Retrovirus RNA Packaging Cassettes Amplified in the Cytoplasm by Autocatalytic Togavirus Vectors

R Morgan, J Wahlfors, K Xanthopoulos (NHGRI)

OTT Reference No. E–135–96/0 filed 25 Sep 96

Licensing Contact: Larry Tiffany; *phone:* 301/496–7056 ext. 206; *e-mail:* LT10X@NIH.GOV

Retroviral vectors are currently the most advanced system available for mammalian gene therapy. The major obstacle with the previous methods is that the transfer of complex or large genomic elements is virtually impossible. This technology obviates the need for the retrovirus DNA provirus stage of the life cycle via retroviral RNA vectors. Specifically, this invention utilizes Togaviruses, especially the Semliki Forest virus (SFV), to produce recombinant retroviral vector RNA in the cytoplasm of a retrovirus packaging cell. Using the SFV system, a retroviral cassette with a heterologous gene is cloned into an SFV expression vector. This in vitro transcribed RNA vector is used to transduce packaging cells. The retroviral RNA vector is amplified in the cytoplasm using the SFV system, and packaged into infectious viral particles. This system represents a means by which large fragments of viral RNA, or complex gene structures, can be transferred via retroviral vectors. An additional advantage is that by using the SFV production system, it is able to produce high titers of retrovirus particles, due to its self-amplification capabilities.

Potential areas of application include: *ex vivo* and *in vivo gene* therapy for infectious (e.g., HIV) and noninfectious (e.g., cancer, birth defects) disease; untranslated genomic regions of DNA may be important for regulation of gene expression.

Dated: August 5, 1997.

Barbara M. McGarey,

Deputy Director, Office of Technology Transfer.

[FR Doc. 97–21401 Filed 8–12–97; 8:45 am]

BILLING CODE 4140–01–P

DEPARTMENT OF HEALTH AND HUMAN SERVICES

National Institutes of Health

National Eye Institute

Notice of the meeting of the National Advisory Eye Council Pursuant to Pub. L. 92–463, notice is hereby given of the meeting of the National Advisory Eye Council (NAEC) on September 11–12, 1997, Executive Plaza North, Conference Room G, 6130 Executive Boulevard, Bethesda, Maryland.

The NAEC meeting will be open to the public on September 11, from 8:30 a.m. until approximately 11:30 a.m. Following opening remarks by the Director, NEI, there will be presentations by the staff of the Institute and discussions concerning Institute programs and policies. Attendance by the public at the open session will be limited to space available.

In accordance with provisions set forth in sec. 552b(c)(4) and 552b(c)(6), Title 5, U.S.C. and sec. 10(d) of Pub. L. 92–463, the meeting of the NAEC will be closed to the public on September 11 from approximately 11:30 a.m. until adjournment at approximately 5:00 p.m. for the review, discussion, and evaluation of individual grant applications. These applications and the discussions could reveal confidential trade secrets or commercial property such as patentable material, and personal information concerning individuals associated with the applications, the disclosure of which would constitute a clearly unwarranted invasion of personal privacy.

Ms. Lois DeNinno, Council Assistant, National Eye Institute, EPS, Suite 350, 6120 Executive Boulevard, MSC–7164, Bethesda, Maryland 20892–7164, (301) 496–9110, will provide a summary of the meeting, roster of committee members, and substantive program information upon request. Individuals who plan to attend and need special assistance, such as sign language interpretation or other reasonable accommodations, should contact Ms. DeNinno in advance of the meeting.

(Catalog of Federal Domestic Assistant Program No. 93.867, Vision Research: National Institutes of Health)

Dated: August 7, 1997.

LaVerne Y. Stringfield,

Committee Management Officer, NIH.

[FR Doc. 97–21423 Filed 8–12–97; 8:45 am]

BILLING CODE 4140–01–M

DEPARTMENT OF HEALTH AND HUMAN SERVICES

National Institutes of Health

National Institute of Diabetes and Digestive and Kidney Diseases; Notice of Closed Meeting

Pursuant to Section 10(d) of the Federal Advisory Committee Act, as amended (5 U.S.C. Appendix 2), notice is hereby given of the following National Institute of Diabetes and Digestive and Kidney Diseases Special Emphasis Panel meeting:

Name of SEP: ZDK1–GRB–D (O1).
Date: August 12, 1997.
Time: 1:00 pm.
Place: Room 6as–37F, Natcher Building, NIH (Telephone Conference Call),
Contact Person: Ann Hagan, Ph.D., Chief, Review Branch, NIDDK, Natcher Building, Room 6as–37F, National Institutes of Health, Bethesda, Maryland 20892–6600, Phone: (301) 594–8886.
Purpose/Agenda: To review and evaluate grant applications.

This notice is being published less than 15 days prior to the above meeting due to the urgent need to meet timing limitations imposed by the review and funding cycle.

This meeting will be closed in accordance with the provisions set forth in secs. 552b(c)(4) and 552b(c)(6), Title 5 U.S.C. Applications and/or proposals and the discussions could reveal confidential trade secrets or commercial property such as patentable material and personal information concerning individuals associated with the applications and/or proposals, the disclosure of which would constitute a clearly unwarranted invasion of personal privacy.

(Catalog of Federal Domestic Assistance Program No. 93.847–849, Diabetes, Endocrine and Metabolic Diseases; Digestive Diseases and Nutrition; and Kidney Diseases, Urology and Hematology Research, National Institutes of Health)

Dated: August 6, 1997.

LaVeen M. Ponds,

Policy Analyst, NIH CMO.

[FR Doc. 97–21400 Filed 8–12–97; 8:45 am]

BILLING CODE 4140–01–M

DEPARTMENT OF HEALTH AND HUMAN SERVICES

National Institutes of Health

National Institute of Environmental Health Sciences; Notice of Closed Meeting

Pursuant to Section 10(d) of the Federal Advisory Committee Act, as amended (5 U.S.C. Appendix 2), notice is hereby given of the following National Institute of Environmental Health Sciences Special Emphasis Panel (SEP) meeting:

Name of SEP: Coordinating Center for the African-American Hereditary Prostate Cancer Study Network (Telephone Conference Call).
Date: August 28, 1997.
Time: 10:00 a.m.
Place: National Institute of Environmental Health Sciences, East Campus, Building 4401, Conference Room 3446, Research Triangle Park, NC 27709.
Contact Person: Dr. Carol Shreffler, National Institute of Environmental Health Sciences, P.O. Box 12233, Research Triangle Park, NC 27709, (919) 541–1445.
Purpose/Agenda: To review and evaluate contract proposals.

The meeting will be closed in accordance with the provisions set forth in secs. 552b(c)(4) and 552b(c)(6), Title 5, U.S.C. Grant applications and/or proposals and the discussions could reveal confidential trade secrets or commercial property such as patentable materials and personal information concerning individuals associated with the applications and/or proposals, the disclosure of which would constitute a clearly unwarranted invasion of personal privacy.

This notice is being published less than fifteen days prior to this meeting due to the urgent need to meet timing limitations imposed by the grant/contract review and funding cycle.

(Catalog of Federal Domestic Assistance Programs Nos. 93.113, Biological Response to Environmental Agents; 93.114, Applied Toxicological Research and Testing; 93.115, Biometry and Risk Estimation; 93.894, Resource and Manpower Development, National Institutes of Health)

Dated: August 7, 1997.

LaVerne Y. Stringfield,

Committee Management Officer, NIH.

[FR Doc. 97–21419 Filed 8–12–97; 8:45 am]

BILLING CODE 4140–01–M

DEPARTMENT OF HEALTH AND HUMAN SERVICES

National Institutes of Health

National Institute of Dental Research; Notice of a Meeting of the National Advisory Dental Research Council

Pursuant to Pub. L. 92–463, notice is hereby given of a teleconference meeting of the National Advisory Dental Research Council, National Institute of Dental Research, on September 9, 1997, Conference Room 10, Sixth Floor, Building 31, National Institutes of Health, Bethesda, Maryland. This meeting will be open to the public from 10:00 a.m. to 11:00 a.m. for general discussion and program presentations. Attendance by the public will be limited to space available.

In accordance with the provisions set forth in secs. 552(c)(4) and 552b(c)(6), Title 5, U.S.C. and sec. 10(d) of Pub. L. 92–463, the meeting of the Council will be closed to the public on September 9, 11:00 a.m. to adjournment for the review, discussion and evaluation of individual grant applications. These applications and information concerning individuals associated with the discussions could reveal confidential trade secrets or commercial property such as patentable material, and personal applications and reports, the disclosure of which would constitute a clearly unwarranted invasion of personal privacy.

Dr. Dushanka V. Kleinman, Executive Secretary, National Advisory Dental Research Council, and Deputy Director, National Institute of Dental Research, National Institutes of Health, Building 31, Room 2C39, Bethesda, Maryland 20892, (telephone (301) 496–9469) will furnish a roster of committee members, a summary of the meeting, and other information pertaining to the meeting upon request. Individuals who plan to attend and need special assistance, such as sign language interpretation or other reasonable accommodations, should contact the Executive Secretary listed above in advance of the meeting.

(Catalog of Federal Domestic Assistance Program No. 93.121, Oral Diseases and Disorders Research)

Dated: August 7, 1997.

LaVerne Stringfield,

Committee Management Officer, NIH.

[FR Doc. 97–21420 Filed 8–12–97; 8:45 am]

BILLING CODE 4140–01–M

DEPARTMENT OF HEALTH AND HUMAN SERVICES

National Institutes of Health

National Institute on Drug Abuse; Notice of Meeting

Pursuant to Pub. L. 92–463, notice is hereby given of the meeting of the National Advisory Council on Drug Abuse, National Institute on Drug Abuse (NIDA) on September 16–17, 1997, at the National Institutes of Health, Building 31, 9000 Rockville Pike, Bethesda, MD 20892.

On September 16, from 9 a.m. to 4 p.m., the meeting will be held in Conference Rooms 9 and 10. In accordance with provisions set forth in secs. 552b(c)(4), and 552b(c)(6), Title 5, U.S.C. and sec. 10(d) of Pub. L. 92–463, this portion of the meeting will be closed to the public for the review, discussion, and evaluation of grant applications. These applications and the

discussions could reveal confidential trade secrets or commercial property such as patentable material and personal information concerning individuals associated with the applications, disclosure of which would constitute a clearly unwarranted invasion of personal privacy.

On September 17, from 9 a.m. to 5 p.m., the meeting will be held in Conference Room 10. This portion of the meeting will be open to the public for announcements and reports of administrative, legislative, and program developments in the drug abuse field. Attendance by the public will be limited to space available.

A summary of the meeting and a roster of committee members may be obtained from Ms. Camilla L. Holland, NIDA Committee Management Officer, National Institutes of Health, Parklawn Building, Room 10–42, 5600 Fishers Lane, Rockville, Maryland 20857, (301/443–2755).

Substantive program information may be obtained from Dr. Teresa Levitin, Room 10–42, Parklawn Building, 5600 Fishers Lane, Rockville, Maryland 20857, (301/443–2755).

Individuals who plan to attend and need special assistance, such as sign language interpretation or other reasonable accommodations, should contact Dr. Levitin in advance of the meeting.

(Catalog of Federal Domestic Assistance Program Numbers: 93.277, Drug Abuse Research Scientist Development and Research Scientist Awards; 93.278, Drug Abuse National Research Service Awards for Research Training; 93.279, Drug Abuse Research Programs)

Dated: August 7, 1997.

LaVerne Y. Stringfield,

Committee Management Officer, NIH.

[FR Doc. 97–21421 Filed 8–12–97; 8:45 am]

BILLING CODE 4140–01–M

DEPARTMENT OF HEALTH AND HUMAN SERVICES

National Institutes of Health

National Institute of Allergy and Infectious Diseases; Notice of Meeting: Microbiology and Infectious Diseases Research Committee

Pursuant to Pub. L. 92–463, notice is hereby given of the meeting of the Microbiology and Infectious Diseases Research Committee, National Institute of Allergy and Infectious Diseases, on October 6–7, 1997 at the Holiday Inn Bethesda, Montgomery Room, 8120 Wisconsin Avenue, Bethesda, Maryland.

The meeting will be open to the public from 8 a.m. to 9:30 a.m. on October 6, to discuss administrative details relating to committee business and for program review. Attendance by the public will be limited to space available. In accordance with the provisions set forth in secs. 552b(c)(4) and 552b(c)(6), Title 5, U.S.C. and sec. 10(d) of Pub. L. 92–463, the meeting will be closed to the public for the review, discussion, and evaluation of individual grant applications and contract proposals from 9:30 a.m. until recess on October 6, and from 8:30 a.m. until adjournment on October 7. These applications, proposals and the discussions could reveal confidential trade secrets or commercial property such as patentable material and personal information concerning individuals associated with the applications and proposals, the disclosure of which would constitute a clearly unwarranted invasion of personal privacy.

Ms. Claudia Goad, Committee Management Officer, National Institute of Allergy and Infectious Diseases, Solar Building, Room 3C26, National Institutes of Health, Bethesda, Maryland, 301–496–7601, will provide a summary of the meeting and a roster of committee members upon request. Individuals who plan to attend and need special assistance, such as sign language interpretation or other reasonable accommodations, should contact Ms. Goad in advance of the meeting.

Dr. Gary Madonna, Scientific Review Administrator, Microbiology and Infectious Diseases Research Committee, NIAID, NIH, Solar Building, Room 4C21, Rockville, Maryland 20892, telephone 301–496–3528, will provide substantive program information.

(Catalog of Federal Domestic Assistance Program No. 93.856, Microbiology and Infectious Diseases Research, National Institutes of Health)

Dated: August 7, 1997.

LaVerne Y. Stringfield,

Committee Management Officer, NIH.

[FR Doc. 97–21424 Filed 8–12–97; 8:45 am]

BILLING CODE 4140–01–M

DEPARTMENT OF HEALTH AND HUMAN SERVICES

National Institutes of Health

National Institute on Deafness and Other Communication Disorders; Notice of Meeting of the National Deafness and Other Communication Disorders Advisory Council and its Planning Subcommittee

Pursuant to Public Law 92–463, notice is hereby given of the meeting of the National Deafness and Other Communication Disorders Advisory Council and its Planning Subcommittee on October 8–10, 1997, at the National Institutes of Health, 9000 Rockville Pike, Bethesda, Maryland. The meeting of the full Council will be held in Conference Room 6, Building 31C, and the meeting of the subcommittee will be in Conference Room 7, Building 31C.

The meeting of the Planning Subcommittee will be open to the public on October 8 from 2 pm until 3 pm for the discussion of policy issues. The meeting of the full Council will be open to the public on October 9 from 8:30 am until 5:00 pm for a report from the Institute Director and discussion of extramural policies and procedures at the National Institutes of Health and the National Institute on Deafness and Other Communication Disorders. Attendance by the public will be limited to space available.

In accordance with the provisions set forth in Sections 552b(c)(4) and 552b(c)(6), Title 5, United States Code and Section 10(d) of Public Law 92–463, the meeting of the Planning Subcommittee on October 8 will be closed to the public from 3 pm to adjournment. The meeting of the full Council will be closed to the public on October 10 from 8 am until adjournment. The meetings will include the review, discussion, and evaluation of individual grant applications and a report of the Board of Scientific Counselors. The applications and the discussions would reveal confidential trade secrets or commercial property such as patentable material, and personal information concerning individuals associated with the applications, the disclosure of which would constitute a clearly unwarranted invasion of personal privacy.

Further information concerning the Council and Subcommittee meeting may be obtained from Dr. Craig A. Jordan, Executive Secretary, National Deafness and Other Communication Disorders Advisory Council National Institute on Deafness and Other Communication Disorders, National Institutes of Health,

Executive Plaza South, Room 400C, 6120 Executive Blvd., MSC7180, Bethesda, Maryland 20892, (301) 496–8693. A summary of the meeting and rosters of the members may also be obtained from his office. For individuals who plan to attend and need special assistance such as sign language interpretation or other reasonable accommodations, please contact Dr. Jordan at least two weeks prior to the meeting.

(Catalog of Federal Domestic Assistance Program No. 93.173 Biological Research Related to Deafness and Communication Disorders)

Dated: August 7, 1997.

LaVerne Y. Stringfield,

Committee Management Officer, NIH.

[FR Doc. 97–21425 Filed 8–12–97; 8:45 am]

BILLING CODE 4140–01–M

DEPARTMENT OF HEALTH AND HUMAN SERVICES

National Institutes of Health

National Library of Medicine; Notice of Meetings of the Board of Regents, the Extramural Programs Subcommittee and the Subcommittee on Outreach and Public Information

Pursuant to Pub. L. 92–463, notice is hereby given of the meeting of the Board of Regents of the National Library of Medicine on September 23–24, 1997, in the Board Room of the National Library of Medicine, 8600 Rockville Pike, Bethesda, Maryland. The Extramural Programs Subcommittee will meet on September 22 in the 5th-Floor Conference Room, Building 38A, from 2 p.m. to approximately 3:30 p.m., and will be closed to the public. The Subcommittee on Outreach and Public Information will meet on September 23 in Conference Room B, Building 38, from 8 to 9:00 a.m., and will be open to the public.

The meeting of the Board will be open to the public from 9 a.m. to approximately 4:15 p.m. on September 23 and from 9 a.m. to adjournment on September 24 for administrative reports and program discussions. Attendance by the public will be limited to space available. Individuals who plan to attend and need special assistance, such as sign-language interpretation or other reasonable accommodations, should contact Mrs. Bonnie Kaps at 301–496–4621 two weeks before the meeting.

In accordance with provisions set forth in secs. 552b(c)(4), 552(c)(6), Title 5, U.S.C. and sec. 10(d) of Pub. L. 92–463, the entire meeting of the Extramural Programs Subcommittee on September 22 will be closed to the public from 2 p.m. to approximately 3:30 p.m., and the regular Board meeting on September 23 will be closed from approximately 4:15 to 5 p.m. for the review, discussion, and evaluation of individual grant applications. These applications and the discussion could reveal confidential trade secrets or commercial property, such as patentable material, and personal information concerning individuals associated with the applications, the disclosure of which would constitute a clearly unwarranted invasion of personal privacy.

Mr. Robert B. Mehnert, Chief, Office of Inquiries and Publications Management, National Library of Medicine, 8600 Rockville Pike, Bethesda, Maryland 20894, Telephone Number: 301–496–6308, will furnish a summary of the meeting, rosters of Board members, and other information pertaining to the meeting.

(Catalog of Federal Domestic Assistance Program No. 93.879—Medical Library Assistance, National Institutes of Health.)

Dated: August 7, 1997.

LaVerne Y. Stringfield

Committee Management Officer, NIH.

[FR Doc. 97–21422 Filed 8–12–97; 8:45 am]

BILLING CODE 4140–01–M

DEPARTMENT OF HEALTH AND HUMAN SERVICES

National Institutes of Health

Division of Research Grants; Notice of Closed Meetings

Pursuant to Section 10(d) of the Federal Advisory Committee Act, as amended (5 U.S.C. Appendix 2), notice is hereby given of the following Division of Research Grants Special Emphasis Panel (SEP) meetings:

Purpose/Agenda: To review individual grant applications.

Name of SEP: Biological and Physiological Sciences.

Date: August 11, 1997.

Time: 1:00 p.m.

Place: NIH, Rockledge 2, Room 4146, Telephone Conference.

Contact Person: Dr. Martin Padarathsingh, Scientific Review Administrator, 6701 Rockledge Drive, Room 4146, Bethesda, Maryland 20892, (301) 435–1717.

Name of SEP: Microbiological and Immunological Sciences.

Date: August 18, 1997.

Time: 11:30 a.m.

Place: NIH, Rockledge 2, Room 4182, Telephone Conference.

Contact Person: Dr. William Branche, Jr., Scientific Review Administrator, 6701 Rockledge Drive, Room 4182, Bethesda, Maryland 20892, (301) 435–1148.

Name of SEP: Biological and Physiological Sciences.

Date: August 19, 1997.

Time: 1:00 p.m.

Place: NIH, Rockledge 2, Room 4146, Telephone Conference.

Contact Person: Dr. Martin Padarathsingh Scientific Review Administrator, 6701 Rockledge Drive, Room 4146, Bethesda, Maryland 20892, (301) 435–1717.

This notice is being published less than 15 days prior to the above meetings due to the urgent need to meet timing limitations imposed by the grant review and funding cycle.

Name of SEP: Behavioral and Neurosciences.

Date: August 25, 1997.

Time: 9:00 a.m.

Place: Governor's House Hotel, Washington, DC.

Contact Person: Dr. Kenneth Newrock, Scientific Review Administrator, 6701 Rockledge Drive, Room 5186, Bethesda, Maryland 20892, (301) 435–1252.

Name of SEP: Behavioral and Neurosciences.

Date: August 29, 1997.

Time: 8:00 a.m.

Contact Person: Dr. David Simpson, Scientific Review Administrator, 6701 Rockledge Drive, Room 5192, Bethesda, Maryland 20892, (301) 435–1278.

Name of SEP: Biological and Physiological Sciences.

Date: September 4, 1997.

Time: 2:00 p.m.

Place: NIH, Rockledge 2, Room 5202, Telephone Conference.

Contact Person: Dr. Anita Miller Sostek, Scientific Review Administrator, 6701 Rockledge Drive, Room 5202, Bethesda, Maryland 20892, (301) 435–1260.

The meetings will be closed in accordance with the provisions set forth in secs. 552b(c)(4) and 552b(c)(6), Title 5, U.S.C. Applications and/or proposals and the discussions could reveal confidential trade secrets or commercial property such as patentable material and personal information concerning individuals associated with the applications and/or proposals, the disclosure of which would constitute a clearly unwarranted invasion of personal privacy.

(Catalog of Federal Domestic Assistance Program Nos. 93.306, 93.333, 93.337, 93.393–93.396, 93.837–93.844, 93.846–93.878, 93.892, 93.893, National Institutes of Health, HHS)

Dated: August 6, 1997.

LaVeen M. Ponds,

Policy Analyst, NIH CMO.

[FR Doc. 97–21399 Filed 8–12–97; 8:45 am]

BILLING CODE 4140–01–M

DEPARTMENT OF HOUSING AND URBAN DEVELOPMENT

[Docket No. FR–4248–N–02]

Fiscal Year 1997 Portfolio Reengineering Demonstration Program Request for Qualifications; Extension of Date for Submission of Qualifications

AGENCY: Office of Assistant Secretary for Housing—Federal Housing Commissioner, HUD.

ACTION: Notice of request for qualifications; extension of date for submission of qualifications.

SUMMARY: On July 16, 1997, the Department published a notice seeking requests for qualifications (RFQ) under a statutory Demonstration Program. The July 16, 1997 RFQ advised that the Department is carrying out a statutory Demonstration Program that is intended to test approaches that reduce the cost of the ongoing Federal subsidy for FHA-insured, Section 8-assisted housing, while preserving this critical affordable housing resource in good physical and financial condition. The July 16, 1997 RFQ is directed to nonprofit organizations that are interested in participating in the Designee process under section VII. of the Guidelines for the Demonstration Program. The Guidelines for the Demonstration Program were published on January 23, 1997. The July 16, 1997 notice requested that the qualifications be submitted to the Department by August 13, 1997.

This notice extends the due date for submission of qualifications indefinitely. By separate notice to be published in the **Federal Register**, the Department will announce the new due date for submission of qualifications. The announcement notice will provide sufficient notice of the new deadline date for submission of qualifications.

FOR FURTHER INFORMATION CONTACT: George C. Dipman, Demonstration Program Coordinator, Office of Multifamily Housing, Department of Housing and Urban Development, 451 Seventh Street, S.W., Washington, DC 20410–4000; Room 6106; Telephone (202) 708–3321. (This is not a toll-free number.) Hearing or speech-impaired individuals may call 1–800–877–8399 (Federal Information Relay Service TTY). Internet address: PRE@hud.gov.

SUPPLEMENTARY INFORMATION: On July 16, 1997 (62 FR 38109), the Department published a notice seeking requests for qualifications (RFQ) under a statutory Demonstration Program. The July 16, 1997 RFQ advised that the Department is carrying out a statutory Demonstration Program that is intended to test approaches that reduce the cost of the ongoing Federal subsidy for FHA-insured, Section 8-assisted housing, while preserving this critical affordable housing resource in good physical and financial condition. The July 16, 1997 RFQ is directed to nonprofit organizations that are interested in participating in the Designee process under section VII. of the Guidelines for the Demonstration Program. The Guidelines for the Demonstration Program were published on January 23, 1997 (62 FR 3567). The July 16, 1997 notice requested that the qualifications be submitted to the Department by August 13, 1997.

This notice extends the due date for submission of qualifications indefinitely. By separate notice to be published in the **Federal Register**, the Department will announce the new due date for submission of qualifications. The announcement notice will provide sufficient notice of the new deadline date for submission of qualifications.

No other change is made to the July 16, 1997 notice other than the extension of the submission date for qualifications.

Dated: August 8, 1997.

Karen A. Miller,

Acting Deputy Assistant Secretary for Multifamily Housing.

[FR Doc. 97–21389 Filed 8–8–97; 2:31 pm]

BILLING CODE 4210–27–P

DEPARTMENT OF HOUSING AND URBAN DEVELOPMENT

[Docket No. FR–4188–N–02]

Notice of Sale of Single Family Mortgage Loans

AGENCY: Office of the Assistant Secretary for Housing-Federal Housing Commissioner, HUD.

ACTION: Notice of sale of single family mortgage loans.

SUMMARY: This notice announces the Department's intention to sell approximately 18,200 Secretary-held single family mortgage loans (the ''loans'') in a sealed bid auction. The majority of loans were insured under various sections of the National Housing Act, 12 U.S.C. 1701 et Seq. (the ''Act'') and thereafter assigned to the Department pursuant to Section 230 of the Act (12 U.S.C. 1715u). The loans are secured by single family properties located nationwide. This notice also describes the bidding process for these loans.

DATES: Bid Packages will be available to eligible bidders on or about August 4, 1997. The auction is currently scheduled for September 9, 1997.

ADDRESSES: Bid Packages will be available from FHA's Financial Advisor, Ernst & Young LLP (E&Y), 1150 18th Street, N.W., Suite 500, Washington, DC 20036 and Utendahl Capital Partners, L.P. (''Utendahl''), 30 Broad Street, 31st Floor, New York, NY 10004 (jointly ''The FA Team''). Bid Packages will be made available only to parties who complete a Confidentiality Agreement and Qualification Statement and are determined to be eligible bidders. A Confidentiality Agreement and Qualification Statement will accompany the announcement brochure that will be distributed to prospective bidders. The FA Team will work with the Government Printing Office to forward Bid Packages to eligible bidders via UPS. Imaged asset files for the loans included in the sale are available for review by eligible bidders who visit the due diligence facility located at 1730 M Street, N.W., Suite 610, Washington, D.C. 20036. To schedule a visit to the due diligence facility or to order supplemental information on the loans, eligible bidders should contact Ron Hughes at (202) 496–0170. This is not a toll free number. The due diligence facility will be open between the hours of 8:00 a.m. and 8:00 p.m., Monday through Friday and 8:00 a.m. to 5:00 p.m. on Saturday. The facility will open on or about August 4, 1997 and will close on or about September 5, 1997.

FOR FURTHER INFORMATION CONTACT: Joseph McCloskey, Director, Single Family Servicing Division, Office of Insured Single Family Housing, Room 9178, Department of Housing and Urban Development, 451 Seventh Street, S.W., Washington, DC 20410; telephone (202) 708–1672. This is not a toll free number. Hearing or speech-impaired individuals may access this number via PT (text telephone) by calling the Federal Information Relay Service at (800) 877–8339. This is a toll free number.

SUPPLEMENTARY INFORMATION: The Department intends to sell approximately 18,200 single family loans in this auction. The loans are secured by single family properties. Some of the loans are performing and some are non-performing. The loans will be divided into one million dollar ($1,000,000) mortgage loan blocks, which will be further arranged into groups. A list of specific loans, mortgage loan blocks and group descriptions will be contained in the Bid Package. No loans will be sold individually. Loans that were assigned to HUD were insured

by the Federal Housing Administration (''FHA''). The loans are not now insured and will be sold without FHA insurance. In the case of most of the loans, HUD has agreed to forbear, under certain conditions, from enforcement of its rights upon default and, for those loans that are within the initial 36-month period of forbearance, mortgagors' payments may be reduced or suspended under the terms of the forbearance agreements. This sale contains loans from both inside and outside of the 36-month period. The Department will offer interested parties an opportunity to bid competitively on loan pools which they may create from combinations of loan blocks, subject to conditions set forth in the Bid Package. The Department shall use its sole discretion to evaluate and determine winning bids.

The Bidding Process

These are the essential terms of sale. To ensure a competitive bidding process, the terms of sale are not subject to negotiation.

The Department will describe in detail the bidding procedure in the Bid Package, which will include bid forms, a nonnegotiable loan sale agreement prepared by the Department (Loan Sale Agreement), specific bid instructions, as well as pertinent information on the loans, such as total outstanding unpaid principal balances, interest rate ranges, maturity terms, geographic locations and performance. The Bid Packages also include computer diskettes containing data on all of the loans.

Bid Packages will be available approximately 6 weeks prior to the Bid Date. Any interested party may request a copy of the Bid Package by sending a written request together with a duly executed Confidentiality Agreement and Qualification Statement to the address specified in the **ADDRESSES** section of this notice.

Prior to the Bid Date a Bid Package Supplement will be mailed to all eligible bidders. It will contain the final list of loans to be conveyed to the successful bidder(s).

As defined in the bidders information package, each bidder must include with its bid a deposit approximately equal to 10% of the amount of its highest bid. If a successful bidder fails to abide by the terms of the Loan Sale Agreement, including those requiring payment to the Department of any remaining sums due pursuant to the Loan Sale Agreement and closing within the time period provided by the Loan Sale Agreement, the Department shall retain any deposit as liquidated damages.

Due Diligence Facility

A bidder due diligence period will take place beginning on or about August 4, 1997. During the bidder due diligence period, eligible bidders may, for a non-refundable fee of $500, review all asset file documents which have been imaged onto a database by visiting the due diligence facility located at 1730 M Street N.W., Suite 610, Washington, D.C., 20036 and/or via modem. Finally, bidders may purchase at a cost of $500 CD ROM discs containing due diligence materials such as payment histories and Brokers' Price Opinions.

Specific instructions for ordering information in electronic format or making an appointment to visit the due diligence facility will be included in the Bid Package. The Department reserves the right to charge a reasonable fee to cover its costs in duplicating and forwarding any information requested by an interested party.

FHA Reservation of Rights

The Department reserves the right to remove loans from the sale at any time prior to the Bid Date for any reason and without prejudice to its right to include any loans in a later sale. The Department also reserves the right to use its sole discretion to evaluate and determine winning bids. The Department reserves the right at its sole discretion and for any reason whatsoever to reject any and all bids.

The Department reserves the right to conduct a ''best and final'' round among tied bidders, wherein bidders will be given the opportunity to increase their bids. Conducting a best and final round shall not be construed as a rejection of any bid or preclude the Department from accepting any bid made by a bidder.

Ineligible Bidders

Notwithstanding a bidder's qualification as an eligible bidder and approved servicer the following individuals and entities (either alone or in combination with others) are ineligible to bid in the sale:

(1) Any employee of the Department, and any member of any such employee's household and any entity controlled by a Department employee or by a member of such employee's household;

(2) Any individual or entity that is debarred or suspended from doing business with the Department pursuant to 24 CFR part 24;

(3) Any contractor, subcontractor, consultant, and/or advisor (or any agent, employee, partner, director, principal, or affiliate of any of the foregoing) who performed services for, or on behalf of, the Department in connection with this sale;

(4) Any individual that was an employee, partner, director, agent, or principal of any entity or individual described in paragraph (3) at any time during which the entity or individual performed services for, or on behalf of, the Department in connection with this sale; and

(5) Any bidder that uses the services, whether directly or indirectly, of anyone to assist in the preparation of any of its bids in connection with this sale who is deemed to be ineligible under any of paragraphs 1–4 above.

Number of Bids

Bidders may bid on any or all of the mortgage loan blocks and/or create their own pools of one or more mortgage loan blocks within a mortgage loan group.

Ties for High Bidder

If a tie continues after the best and final offers are submitted, the successful bidder will be determined by lottery.

Single Family Loan Sale Procedure

The Department has selected a competitive sealed bid auction as the method to sell the blocks of loans. Historically, this method of sale optimizes the Department's return on the sale of loans, affords the greatest opportunity for all interested parties to bid on the defaulted loans, and provides the quickest and most efficient vehicle for the Department to dispose of the loans.

Single Family Loan Sale Policy

Post Sale Servicing Requirements

The loans will be sold servicing released. The loans must be serviced by an FHA approved mortgagee for the remaining lives of the loans, unless a loan is assumed, modified, refinanced or satisfied of record in the manner set forth in the servicing requirements contained in the Loan Sale Agreement.

Purchasers of these loans, and their successors and assigns, will be required to service the loans in accordance with the applicable provisions of the Loan Sale Agreement. The Department intends to take any and all steps possible to ensure enforcement of these provisions.

Scope of Notice

This notice applies to the Single Family Loan Sale Number 5, and does not establish Departmental procedures and policies for the sale of other mortgage loans. If there are any conflicts between this Notice and the Bid Package, the contents of the Bid Package prevail.

Dated: August 7, 1997.

Nicolas P. Retsinas,

Assistant Secretary for Housing-Federal Housing Commissioner.

[FR Doc. 97–21302 Filed 8–12–97; 8:45 am]

BILLING CODE 4210–27–P

DEPARTMENT OF THE INTERIOR

Fish and Wildlife Service

Notice of Availability of a Draft Revised Recovery Plan for the Okaloosa Darter for Review and Comment

AGENCY: Fish and Wildlife Service, Interior

ACTION: Notice of document availability.

SUMMARY: The U.S. Fish and Wildlife Service (Service) proposes to extend the public comment period for review of the draft revised recovery plan for the Okaloosa darter. This endangered fish occurs in six stream systems flowing from Eglin Air Force Base through or near the cities of Niceville and Valparaiso into Boggy and Rocky bayous on Choctawhatchee Bay, in Okaloosa and Walton Counties, Florida. During the previous comment period (June 10, 1997–August 8, 1997)) agencies significantly involved in the recovery of the Okaloosa darter were concerned that they would be unable to provide their comments within the comment period.

DATES: Comments on the draft revised recovery plan must be received on or before August 30, 1997, to receive consideration by the Service.

ADDRESSES: Persons wishing to review the draft revised recovery plan may examine a copy at the U.S. Fish and Wildlife Service's Panama City Field Office, 1612 June Avenue, Panama City, Florida 32405, between 7:30 AM and 4:30 PM Central Time; or may obtain a copy by contacting Frank Parauka, Panama City Field Office, 850/769–0552 ext. 237.

Written comments and materials regarding the plan should be addressed to Frank Parauka at the Panama City Field Office. Comments and materials received are available on request for public inspection, by appointment, during the previously stated hours at the Panama City Field Office.

FOR FURTHER INFORMATION CONTACT: Frank Parauka, at the Panama City Field Office address given above, at 850/769–0552, ext. 237, respectively.

SUPPLEMENTARY INFORMATION:

Background

Restoring an endangered or threatened animal or plant to the point where it is again a secure, self-sustaining member of its ecosystem is a primary goal of the U.S. Fish and Wildlife Service's endangered species program. To help guide the recovery effort, the Service is working to prepare recovery plans for most of the listed species native to the United States. Recovery plans describe actions considered necessary for conservation of the species, establish criteria for the recovery levels for downlisting or delisting them, and estimate the time and cost for implementing the recovery measures needed.

The Endangered Species Act of 1973, as amended (Act) (16 U.S.C. 1531 *et seq.*) requires the development of recovery plans for listed species unless such a plan would not promote the conservation of a particular species. Section 4(f) of the Act, as amended in 1988, requires that public notice and an opportunity for public review and comment be provided during recovery plan development. The Service will consider all information presented during a public comment period prior to approval of each new or revised recovery plan. The Service and other federal agencies will also take these comments into account in the course of implementing approved recovery plans.

The draft revised recovery plan for the Okaloosa darter updates the original 1981 plan. The Service listed this species in 1973 due to its extreme limited range, habitat degradation, and apparent competition from a possibly introduced related species, the brown darter. Studies recommended in the original plan have been completed. Eglin Air Force Base is implementing habitat conservation measures, and plans to implement others. Okaloosa darter populations have apparently stabilized. Downlisting this species from endangered to threatened could be considered in the near future if Okaloosa darter populations in all six inhabited stream systems remain stable or increase, and if effective interagency agreements are established to protect the quality and quantity of water in these streams. Inhabited streams are the main stems and tributaries of Toms, Turkey, Mill, Swift, East Turkey, and Rocky creeks. The watersheds of these streams, located on Eglin Air Force Base and in the cities of Niceville and Valparaiso, are also in the planning area. Comments received during the review period will be used as appropriate for developing a final revised recovery plan. The Panama City Field Office will then forward the final plan to the Service's Regional Office in Atlanta, Georgia, for approval.

Public Comments Solicited

The Service solicits written comments on the draft revised recovery plan described. All comments received by the date specified above will be considered prior to approval of the plan.

Authority

The authority for this action is Section 4(f) of the Endangered Species Act, 16 U.S.C. 1533(f).

Dated: August 7, 1997.

Bryan Arroyo,

Acting Field Supervisor.

[FR Doc. 97–21430 Filed 8–12–97; 8:45 am]

BILLING CODE 4310–55–P

DEPARTMENT OF THE INTERIOR

Geological Survey

Federal Geographic Data Committee (FGDC); Public Comment on the Proposal to Develop the ''National Shoreline Data Standard'' as a Federal Geographic Data Committee Standard

ACTION: Notice; request for comments.

SUMMARY: The Federal Geographic Data Committee (FGDC) is charged through Executive Order 12906 with developing standards for geospatial data. Geospatial data include geographic information and related products that are used for a variety of mapping and resource assessment purposes by many segments of society. The Executive Order states that standards shall be developed ''. . . in consultation and cooperation with State, local, and tribal government, the private and academic sector, and to the extent feasible the international community . . .'' The FGDC has identified that there is an important national need to develop a standard for shoreline data.

The FGDC Bathymetric and Geodetic Subcommittees, along with the Coastal States Organization is sponsoring an upcoming Shoreline Data Content Workshop. The purpose of the meeting and this announcement is to gather information on the need for a national shoreline data content standard, as outlined in the draft proposal included in this announcement.

In addition to comments on the need for a national shoreline standard, the FGDC is seeking the identification of existing standards on shoreline data on the identification of individuals or organizations that are interested in being part of the standards development team or would otherwise like to be involved in the review and evaluation of the national standard as it is developed.

DATES: Comments must be received on or before October 1, 1997. The Shoreline Data Content Workshop will be held November 3–5, 1997 at the NOAA Coastal Services Center, Charleston, SC.

CONTACT AND ADDRESSES: To submit comments and for more information on the November workshop contact: November workshop contact: Millington Lockwood, Executive Secretary, FGDC Bathymetric Subcommittee, 1315 East-West Highway, Room 6222, Silver Spring, Maryland 20910, Phone: 301:713–2777x171, Fax: 301–713–4019, Internet: millington.lockwood@noaa.gov

SUPPLEMENTARY INFORMATION:

Proposal for a National Shoreline Data Standard

Submitting Organization: National Oceanic and Atmospheric Administration, (NOAA) National Ocean Service, National Geodetic Survey, Division of Remote Sensing.

Objectives: This Standard is intended to serve the community of users who are involved with geospatial data ''activities'' that intersect the U.S. Shoreline. The purpose is to clarify (standardize) the complexities of shoreline data by developing a data model representing the various aspects of shoreline, relationship to other data standards, and its expected usage. The standard will also define the content accuracy, datum requirements, spatial (X,Y,Z) accuracy, and metadata requirements.

This standard is based on the approach utilized by NOAA's National Geodetic Survey (formerly a part of the U.S. Coast and Geodetic Survey) for mapping the shoreline of the United States and determining boundaries referenced to various tidal datums. It will also establish a consistent standard for all national mapping requirements.

It is our intention that this standard will become the official FGDC/NSDI standard for the shoreline layer of the NSDI framework and an integral component of the national hydrographic data layer.

Scope: The scope of this standard project involves a determination of the content of the national shoreline (both tidal and non-tidal) for the purposes of establishing legal boundaries, the baseline of the United States, and to have a consistently reliable (known) and properly documented shoreline for water/land interface. It is primarily oriented toward reaching a common understanding of the shoreline for national mapping purposes and other geospatial (GIS) applications.

Justification: Users of shoreline data make up a much more diverse group than previously thought. Shoreline data are also important for coastal zone management, environmental monitoring, resource developments, legal land jurisdictional issues, ocean and meteorological modelling, engineering, construction, planning, and many other uses. A published standard will provide the affected community with a basis to assess the quality and utility of their shoreline data. Shoreline is an integral component of the FGDC NSDI geospatial framework.

Benefits: The principal objective is to specify *minimum* standards for shoreline data in order that shoreline data collected according to these standards are sufficiently accurate and that spatial uncertainty of data is quantified. This will provide a standardized methodology for evaluating shoreline data (regardless of survey methodology or technology) and reporting resultant data quality through a statistically sound approach. This will permit much wider use and acceptability (sharing) of shoreline data between parties. This will also establish a means (rules) for establishing a national shoreline certification program.

Development Approach: The approach that is being used to develop this standard is to:

A. Identify, review, document, and distribute existing standard reference documents (see section on existing standards)
B. Conduct a needs and requirements survey of the potential user community (Federal, state, local government agencies, and private surveyors)
C. Conduct public workshop to draft standard
D. Test and evaluate standard
E. Release draft standard for public review
F. Conduct a public workshop based upon comments from the public review in order to refine the draft standard.

We intend to hold at least two open forum/workshop type meetings to explain the standard to the affected community. The first meeting is scheduled for November 3–5, 1997, at the NOAA Coastal Services Center in Charleston, SC. A second meeting will be held in the spring of 1998 in conjunction with the annual meeting of the American Society of Photogrammetry and Remote Sensing in Tampa, Florida, March 30–April 4, 1998.

Development and Completion Schedule: It is anticipated that an outline of the draft shoreline standard will be completed by December 1997. The draft standard will be completed by April 1998. At that time the standard will be available for preliminary review and will be the subject of the second workshop. Following this workshop there will be a 3-month period of formal public review. It is anticipated that the draft standard will receive a thorough review and comments will primarily be of a clarifying nature relating to the implementation of the standard or definitions.

Resources: Resources needed to complete this standard are available within the NOAA Office of the Coast Survey, the National Geodetic Survey, and the NOAA Coastal Services Center. Funding requests of state and local participants at the workshops has been requested from FGDC.

Potential Participants: The primary organizations who will be involved in the development of this standard are the shoreline engineering, coastal zone management, flood insurance, and resource management community. These include the National Oceanic and Atmospheric Administration, U.S. Geological Survey, Minerals Management Service, Bureau of Land Management, Federal Emergency Management Agency, the Environmental Protection Agency, Department of State, Department of Justice, U.S. Bureau of the Census, U.S. Coast Guard, U.S. Army Corps of Engineers, the National Imagery and Mapping Agency. There is also interest in this standard from private surveying contractors, real estate, insurance industry, various agencies within state and local governments, and private land owners.

Anticipated User Community: Agencies that conduct surveys of shorelines, including coastal and estuarine, inland lakes and rivers are the most likely groups to use this standard. By and large this is embodied in the civil engineering, surveying, and photogrammetry community This standard will greatly increase the potential for exchange of data between and among various federal, state, local governmental agencies, academic institutions, and the private sector. The standard will provide a common understanding of data accuracy requirements based on a variety of applicant profiles and accuracies. It will also provide a common framework for independent evaluation and assessment of shoreline data for a range of applications, independent of technology.

Related Standards: A crosscutting standards review and data model conducted by FGDC in 1995 indicated that most of the FGDC thematic

subcommittees and work groups have a relationship to shoreline data. Two data standards that have been published that include reference to the shoreline are the Cadastral Standard and the Wetlands Standard. The Tri Service Spatial Data Standard and feature reference model contain a relationship to shoreline. The National Imagery and Mapping Agency has recently published a geospatial systems data model for shoreline data. There are several FGDC standards in either draft or proposal stage that relate to shoreline, these include: digital elevation, data accuracy, hydrographic, and facilities.

Reference Documents and Existing Standards

Existing standards that relate to shoreline are contained within the following publications and reports.

Swainson, O.W., 1928. Topographic Manual, Special Publication No. 144, DOC, U.S. Coast and Geodetic Survey.

Swanson, R.L., 1949. Topographic Manual, Part II, U.S. Coast and Geodetic Survey Special Publication 249.DOC U.S. Coast and Geodetic Survey.

Shalowitz, A.L., 1964. Shore and Sea Boundaries—with special reference to the interpretation and use of Coast and Geodetic Survey Data. U.S. Department of Commerce Publication 10–1, Two Volumes, U.S. GPO, Washington, D.C.

U.S. Department of Commerce, 1976. Hydrographic Manual, Fourth Edition, NOAA/NOS Washington, D.C. Chapter 3.2, Shoreline Surveys.

Ellis, M.Y., 1978. Coastal Mapping Handbook, Department of the Interior, U.S. Geological Survey and U.S. Department of Commerce, National Ocean Service and Office of Coastal Zone Management, U.S. GPO, Washington, D.C.

U.S. Department of the Interior, 1979. Classification of Wetlands and Deepwater Habitats of the United States, FGDC Standards for Wetlands, Approved by FGDC December 1996.

Hicks, Stacey D., 1980. The National Tidal Datum Convention of 1980. U.S. Department of Commerce, National Ocean Survey.

Hicks, Stacy D., 1984. Tide and Current Glossary, NOAA/National Ocean Service. Rockville, MD.

Hicks, Stacy D., 1988. Fantastic Tidal Datums NOAA/NOS. Rockville, MD.

NOAA/DMA, 1990. Chart No. 1, Nautical Chart Symbols Abbreviations and terms, 9th Edition January 1990. Joint NOAA/DMA publication.

Harrington, Charles, E., 1993. Maritime Boundaries on National Ocean Service Nautical Charts. Cartographic Perspectives, Bulletin of the North American Cartographic Information Society. No. 14, Winter 1993.

Fritz, L.W., 1994. Shoreline Layer of the Master Seafloor Digital Data Base. Concept and Tutorial. NIMA HYSAS Program Office, Bethesda, MD.

U.S. Army Corps of Engineers, 1994. Civil Works Engineering Manual EM–1110–2–1003—Hydrographic Surveying.

Tri-Service CADD/GIS, 1996. GIS Spatial Data Standards. Department of Defense Tri-Service Technology Center, Vicksburg, MS.

FGDC, 1996. Cadastral Data Content Standard for the National Spatial Data Infrastructure, FGDC, Washington, D.C.

International Hydrographic Office, 1996. International Transfer Standard for Digital Hydrographic Data. Edition 3.9, IHO Special Publication No. 57 International Hydrographic Bureau, Monaco.

National Imagery and Mapping Agency, 1997. The United States Imagery and Geospatial System Data Model, Volume 4—Nautical—NIMA: Standards and Interoperability Division Bethesda, MD.

Completion Date: Approximately December 1998.

Target Authorization Body: The Federal Geographic Data Committee will be the authorization body for this standard.

Maintenance Agency: Department of Commerce, National Oceanic and Atmospheric Administration, National Ocean Service, National Geodetic Survey—Under the leadership of the FGDC Bathymetric and Nautical Charting Data Subcommittee.

Dated: August 1, 1997.

Richard E. Witmer,

Chief, National Mapping Division.

[FR Doc. 97–21409 Filed 8–12–97; 8:45 am]

BILLING CODE 4310–31–M

DEPARTMENT OF THE INTERIOR

Bureau of Land Management

[MT–962–1020–00]

Notice of Availability for the Montana/Dakotas Standards for Rangeland Health and Guidelines for Livestock Grazing Management Record of Decision

AGENCY: Bureau of Land Management, Interior.

ACTION: Notice of availability.

SUMMARY: The Record of Decision (ROD) on the final environmental impact statement (EIS) for Standards for Rangeland Health and Guidelines for Livestock Grazing Management (standards and guidelines) in Montana and North and South Dakota is available. The ROD documents the selection of the Preferred Alternative (the standards and guidelines) and provides background information and rationale for the decision. The standards and guidelines were developed in coordination with four Resource Advisory Councils (RACs) in Montana and the Dakotas. The standards and guidelines would be incorporated into 10 BLM land use plans that cover about 8.4 million acres of BLM-administered land in Montana and the Dakotas. This action is proposed in accordance with revised regulations for livestock grazing on BLM-administered lands (43 CFR 4100).

FOR FURTHER INFORMATION CONTACT: Sandy Brooks, Project Manager, BLM Montana State Office, P.O. Box 36800, Billings, Montana 59107–6800, or 406–255–2929.

SUPPLEMENTARY INFORMATION: The final EIS for Standards for Rangeland Health and Guidelines for Livestock Grazing Management was released and made available for a 30-day public availability period on June 6, 1997. The 30-day protest period for the final EIS began on June 18, 1997. The final EIS reflected changes based on public comments from the draft and supplement to the draft EIS. The changes included modifications to the Preferred Alternative, as well as other portions of the EIS, but did not change the scope of the final EIS nor alter the analysis of the environmental impacts. The decision to select the Preferred Alternative was based on a review of the environmental analysis in the EIS and consideration of public comments.

Dated: August 7, 1997.

James Binando,

Acting Deputy State Director, Division of Resources.

[FR Doc. 97–21352 Filed 8–12–97; 8:45 am]

BILLING CODE 4310–DN–P

DEPARTMENT OF THE INTERIOR

Bureau of Land Management

[AZA–29258]

Arizona, Notice of Scoping Period

AGENCY: Bureau of Land Management, Interior.

ACTION: Notice of scoping period and notice of open house.

SUMMARY: Pursuant to the Federal Land Policy and Management Act of 1976, the Bureau of Land Management (BLM), Lake Havasu Field Office announces an Open House to be held in Bullhead City, Arizona, to identify issues and accept comments concerning a proposed development on approximately 280 acres of BLM-administered land presently under lease. The land is located in Bullhead City, Arizona, along the shores of the Colorado River.

The concessioner intends to use the land for the Silver Shores Project, a development of multi-use recreational facilities, including a recreational vehicle park, sports complex, and associated commercial facilities. This notice is intended to invite the public to participate in identification of issues and the consideration of alternatives. All comments will be considered during analysis and assessment of the project, including all reasonable alternatives.

DATES: An Open House to identify public concerns will be held at the following date and location: Tuesday, September 9, 1997 from 4:00 p.m. to 8:00 p.m. at the Bullhead City Area Chamber of Commerce Conference Room, 1251 Highway 95, Bullhead City, AZ. Comments relating to the identification of issues and alternatives will be accepted at the meeting, or by mail if postmarked no later than September 24, 1997.

ADDRESSES: Send comments to: Bureau of Land Management, Lake Havasu Field Office, 2610 Sweetwater Avenue, Lake Havasu City, AZ 86406.

FOR FURTHER INFORMATION CONTACT: Mike Wilson, Concession Specialist, (520) 505–1200.

SUPPLEMENTARY INFORMATION: The Silver Shores Project proposes a recreational vehicle (RV) park, along with an office, postal, fueling, food service, RV storage and other support facilities. Later development may include a sports complex, rooms for extended overnight stays, live entertainment, and retail facilities. The project would require five to ten years to reach completion. It is contiguous to a city park and fire station and is consistent with city planning and zoning requirements. No development has taken place. No marina is planned or proposed. No full time residency is authorized. The government remains the landowner.

Anticipated Issues

The following preliminary issues have been identified by the Lake Havasu Field Office's interdisciplinary team.

1. Riparian habitats included within the boundary of the parcel.

2. Potential impacts to any threatened and endangered species that may occur on the parcel.

3. Existing public uses of the parcel.

Other Relevant Information

Complete information of all phases of the proposed Silver Shores Project will be available for public review at the Open House and at the Lake Havasu Field Office, Lake Havasu City, Arizona.

Dated: August 1, 1997.

Jaime T. Provencio,

Field Manager.

[FR Doc. 97–21347 Filed 8–12–97; 8:45 am]

BILLING CODE 4310–32–M

DEPARTMENT OF THE INTERIOR

Minerals Management Service

Safety and Environmental Management Program (SEMP) on the Outer Continental Shelf (OCS)

AGENCY: Minerals Management Service (MMS), Interior.

ACTION: Notice.

SUMMARY: MMS has decided to continue its collaborative efforts with representatives of OCS oil and gas operating companies to voluntarily implement its SEMP initiative. We will continue to work with OCS operators to enhance their performance in safety and environmental protection through a variety of cooperative actions and agency initiatives. The Agency will, however, increase its focus on the performance records of companies, and will take increasingly firm actions against poor performers.

DATES: MMS will consider all comments received by November 12, 1997. Any comments received after November 12, 1997 may not be fully considered.

ADDRESSES: Mail or hand-carry comments to the Department of the Interior; Minerals Management Service; Mail Stop 4020; 381 Elden Street; Herndon, Virginia 20170–4817; Attention: Rules Processing Team (Comments).

FOR FURTHER INFORMATION CONTACT: Jeff Wiese, Performance and Safety Branch at (703) 787–1591 or e-mail to Jeff.Wiese@MMS.GOV.

SUPPLEMENTARY INFORMATION:

What is SEMP?

SEMP is a safety systems management model designed around offshore oil and gas exploration and development activities. This concept is currently embodied in a publication of the American Petroleum Institute (API) known as Recommended Practice 75 (RP75). This document is available from the API; they can be reached by phone at (202) 682–8375.

Why is the MMS Promoting SEMP?

MMS has developed a sound regulatory program to protect the public's interests in the exploration and development of OCS oil and gas over the course of more than a quarter century. This program is based, in large measure, on standards and recommended practices developed in association with OCS stakeholders that delimit how a ''safe and prudent'' operator would conduct its business. This regulatory program has historically focused on hardware and engineering approaches to resolve offshore safety and operating issues. It has been, as well, fairly prescriptive.

The SEMP concept was created to address the role of human and organizational error to accidents. By some estimates, human and organizational factors lie at the root cause of up to 80 percent of all accidents.

Through SEMP, MMS is seeking alternative ways to complement our current regulatory efforts to protect people and the environment during oil and gas exploration and production activities taking place on the U.S. OCS. MMS undertook this initiative following two separate, but related, studies which indicated that many OCS operators were led by the traditional, prescriptive regulatory approach of MMS to focus more on compliance with existing rules than in systematically identifying and mitigating all risks posed by their operations. Implementation of SEMP squarely places the responsibility for protection of people, facilities, and the environment on the shoulders of OCS operators.

What Related Past Actions Has MMS Taken?

MMS introduced its SEMP concept in the **Federal Register** on July 2, 1991 (56 FR 30400). In response, OCS operators requested that they be given an opportunity to further develop SEMP and a chance to demonstrate that they could voluntarily adopt it on a widespread basis. MMS joined with a broad-based industry committee to refine the SEMP concept under the aegis of the API. In May 1993, the API published RP75 as its response to SEMP. This document clearly reflects a consensus both within MMS and the offshore industry on what course a safe and prudent operator would steer—at a minimum. On June 30, 1994, MMS published a notice in the **Federal**

Register (59 FR 33779) in which it said that RP75 generally captured the agency's perception of what a SEMP should contain. At that time, MMS committed to a 2-year moratorium on regulatory activity related to SEMP during which it would closely monitor the voluntary adoption of RP75 by OCS operators. MMS extended for one year its observation of this experiment in a **Federal Register** notice published on July 18, 1996 (61 FR 37493).

Why Is This Action Being Taken by MMS?

MMS and representatives of the offshore oil and gas industry previously agreed (see above) to allow industry to voluntarily implement SEMP on a widespread basis. MMS originally established a two-year window for this experiment and then later extended the window for an additional year. This extension was announced even though MMS has seen substantial progress across the board in program development. There was not, however, sufficient evidence of field-level implementation of SEMP at that time for the Agency to judge the results of this experiment. The additional year has provided MMS with the information needed to make its decision whether or not to require SEMP at this time.

What Information Was Used to Make This Decision?

MMS has used a number of means to determine how well and how widespread voluntary implementation of its SEMP initiative has been undertaken by OCS operators. Among these means we have: (1) collaborated with the major industry trade associations to conduct year-end SEMP implementation surveys of all OCS operators over the past three years (1994, 1995, and 1996); (2) cosponsored several SEMP implementation workshops focused on challenges identified by operators who responded to these surveys in which volunteers were recruited to share best practices; (3) conducted twenty MMS-company SEMP implementation interviews with a cross-section of operators (both major and independent); and (4) probed whether and how well SEMP had been implemented during routine inspections made by MMS at the operators's offshore installations.

What Conclusions Has MMS Made?

The SEMP initiative has served as a catalyst to refocus the attention of both the offshore industry and MMS on bottom-line performance and not solely on regulatory compliance. We have seen strong evidence that adoption of SEMP cannot only accomplish public objectives in the areas of promoting safety and environmental protection, but it can also make good business sense by avoiding or containing accident and pollution costs.

The vast majority of OCS operators have undertaken, in earnest, to develop and implement SEMP plans. Many of these operators now have plans generally in place, and they are beginning the continuous improvement phase marked by the conduct of internal audits. Some companies have even requested MMS participation in cooperative reviews of their SEMP plans.

MMS takes notice that many operators have voluntarily embraced safety systems management and SEMP. As with any voluntary effort, some operators will choose not to participate. We believe that their safety and environmental performance will suffer relative to their peers. Accordingly, their opportunities to explain their poor performance to MMS will increase.

The largest challenges that MMS sees in areas covered by SEMP are how to better integrate the safety and environmental programs and principles of OCS operators with those of their many contractors and how to develop a common vocabulary upon which performance reviews will be conducted.

What Decision Has MMS Reached?

We have decided to continue the non-regulatory, voluntary option for SEMP as long as we continue to observe satisfactory implementation efforts on an industry-wide basis. The Agency reserves the right, of course, to incorporate all or any part of SEMP into its regulatory program if we determine that such action would better serve the public interest. Specific areas of RP75 will continue to be examined by MMS for incorporation into its regulatory framework. The SEMP concept has always been envisioned by both MMS and the offshore industry as a strong tool to enhance safety and environmental performance. Given that so many companies have now embraced the safety systems management concepts embodied within SEMP, the Agency will now increasingly focus and act on their related performance records.

What's Next?

Though we have decided to continue the non-regulatory approach to implementing the SEMP initiative by OCS operators, MMS plans to stay actively involved by promoting the concept and its adoption both through collaborative activities and new Agency projects. As appropriate, certain facets of SEMP may be reflected in our regulatory program where they help both us and the offshore industry better focus on performance. An immediate example would be our current performance-based training project.

We plan to collaborate with representatives of the offshore industry to track and improve the SEMP concept by: (1) making minor improvements to RP75 through the committee process under the guidance of the API; (2) conducting the fourth annual SEMP implementation survey at the beginning of 1998; (3) continuing our efforts to develop and implement commonly-defined measures of performance; (4) continuing to work with volunteer companies to conduct cooperative, in-depth reviews of their SEMP plans; (5) cosponsoring workshops, or research, that are designed to develop or share best practices in the areas of safety and environmental protection; and (6) working to identify specific MMS regulations for which OCS operators, who can demonstrate solid performance and a fully implemented SEMP, could individually request approval for using alternative means of compliance.

For our part, MMS will be refocusing its attention on the bottom-line performance of OCS operators by: (1) preparing internal analyses that rank the performance of all OCS operators on a company-wide basis; (2) conducting annual performance reviews with all OCS operators during which both these performance analyses and those of the company, together with related information, will be compared and discussed; (3) increasingly risk-basing our inspection program—past safety and environmental performance will play an important part in determining the risk posed by an operator or their specific operations; and (4) increasing the costs of poor performance by spending much more time with poor performers, by factoring past performance into civil penalty assessments, and by publishing a notice of all settled civil penalty cases.

What More Can Companies Do?

One of SEMP's underlying principles is that management in the OCS oil and gas companies must provide leadership and take responsibility for ensuring that SEMP is properly implemented and that it is effective. In that regard, we would appreciate being notified by a top executive or operating official from each company as soon as that company has fully implemented their SEMP plans at the field level. This voluntary notification can be made by writing to the address listed at the beginning of this notice; a copy to the appropriate MMS Regional Director would also be

appreciated. Additionally, companies could request that MMS participate in cooperative performance review activities.

Two, one-day workshops have been scheduled (September 9, 1997 in New Orleans and September 23, 1997 in Houston) to discuss implementation of performance measures developed by a joint industry-MMS work group. MMS will be sending notice of this workshop to all our lessees and operators, as will all the major trade associations. Please call the contact identified in the **FOR FURTHER INFORMATION** section at the beginning of this notice if would like to discuss the workshops further.

Dated: July 31, 1997.

Cynthia Quarterman,

Director, Minerals Management Service.

[FR Doc. 97–21346 Filed 8–12–97; 8:45 am]

BILLING CODE 4310–MR–M

DEPARTMENT OF THE INTERIOR

National Park Service

Golden Gate National Recreation Area; Operation of a Food and Gift Shop

SUMMARY: The National Park Service will be releasing a concession Prospectus to continue the operation of the Cliff House Restaurant and Gift Shop. This is a year-round restaurant and gift shop business operating within Golden Gate National Recreation Area. This operation provides different levels of food service, from delicatessen and sit down style to fine dining service. Within the same structure is a gift shop operation providing visitors with assorted souvenirs items. The annual gross receipts average about $8 million. The new contract will be for twenty (20) years. The new contract requires a major renovation program of the existing structure with an estimated cost of $8 million. There is an existing concessioner which has operated satisfactorily under the existing contract and has a right of preference in renewal.

SUPPLEMENTARY INFORMATION: The cost for purchasing a Prospectus is $30.00. Parties interested in obtaining a copy should send a check, NO CASH, payable to ''National Park Service'' to the following address: National Park Service, Office of Concession Program Management, Pacific Great Basin Support Office, 600 Harrison Street, Suite 600, San Francisco, CA 94107–1372. The front of the envelope should be marked ''Attention: Office of Concession Program Management—Mail Room Do Not Open.'' Please include a mailing address indicating where to send the prospectus. Inquiries may be sent to Ms. Teresa Jackson, Office of Concession Program Management at (415) 427–1369.

Dated: August 5, 1997.

John J. Reynolds,

Regional Director, Pacific West Region.

[FR Doc. 97–21349 Filed 8–12–97; 8:45 am]

BILLING CODE 4310–70–P

DEPARTMENT OF THE INTERIOR

National Park Service

Great Basin National Park; Operation of a Food and Gift Shop

SUMMARY: The National Park Service will be releasing a concession prospectus authorizing the continued operation of a modest food and gift shop at Lehman Caves Visitor Center within Great Basin National Park. The park is located in Eastern Nevada. This is a seasonal operation and will be open to serve the public approximately 6½ months out of the year from April through mid-October. The average visitation over the last three years for this period has been between 64,000 and 66,600. The annual gross receipts over the same period of time has been approximately $171,000. The concessioner will be required to assist in defraying the cost for maintenance of a government building used by concessioner. There is an existing concessioner which has operated satisfactorily and is entitled to a right of preference in renewal.

SUPPLEMENTARY INFORMATION: The cost for purchasing a Prospectus is $30.00. Parties interested in obtaining a copy should send a check, NO CASH, payable to ''National Park Service'' to the following address: National Park Service, Office of Concession Program Management, Pacific Great Basin Support Office, 600 Harrison Street, Suite 600, San Francisco, CA 94107–1372. The front of the envelope should be marked ''Attention: Office of Concession Program Management—Mail Room Do Not Open''. Please include a mailing address indicating where to send the prospectus. Inquiries may be sent to Ms. Teresa Jackson, Office of Concession Program Management at (415) 427–1369.

Dated: July 8, 1997.

John J. Reynolds,

Regional Director, Pacific West Region.

[FR Doc. 97–21350 Filed 8–12–97; 8:45 am]

BILLING CODE 4310–70–P

DEPARTMENT OF THE INTERIOR

National Park Service

Notice of Intent To Issue a Prospectus for the Operation of Hotel and Related Facilities in Sequoia National Park

SUMMARY: The National Park Service is seeking to award a concession contract for the operation and construction of new visitor facilities and continued operation of certain existing facilities within Sequoia National Park, which is part of Sequoia and Kings Canyon National Parks. The contract will be awarded on a fully competitive basis. The Prospectus which describes the project is expected to be issued within a few weeks. Interested parties should place their names on the mailing list to be sent the Prospectus.

SUPPLEMENTARY INFORMATION: The development to be constructed includes as many as 414 guest units, along with food service and other related commercial and support facilities. Extensive site preparation, roads, parking and other infrastructure work have already been completed by the government. The site has a panoramic view from the western face of the Sierra Nevada. To discuss the proposed development, interested parties should call Ms. Peggy Williams, Chief, Concession Program Management, Sequoia and Kings Canyon National Parks, (209) 565–3103.

The cost for purchasing a Prospectus is $30.00. Parties interested in obtaining a copy should send a check, NO CASH, payable to ''National Park Service'' to the following address: Pacific Great Basin Support Office, National Park Service, 600 Harrison Street, Suite 600, San Francisco, California 94107–1372, *Attention*: Office of Concession Program Management ''Mail Room Do Not Open''.

Please include a mailing address indicating where to send the Prospectus. Address inquiries to Ms. Teresa Jackson, Secretary, Office of Concession Program Management at (415) 427–1369.

Dated: July 11, 1997.

John J. Reynolds,

Regional Director, Pacific West Region.

[FR Doc. 97–21348 Filed 8–12–97; 8:45 am]

BILLING CODE 4310–70–P

DEPARTMENT OF THE INTERIOR

National Park Service

Notice of Inventory Completion for Native American Human Remains and Associated Funerary Objects From Lemhi County, ID, in the Control of the Idaho State Office, Bureau of Land Management, Boise, ID

Editorial Note: FR document 97-20323 was originally published on page 41414 in the issue of Friday, August 1, 1997. It was inadvertently published with incorrect text. The correct text appears below.

AGENCY: National Park Service.

ACTION: Notice.

Notice is hereby given in accordance with provisions of the Native American Graves Protection and Repatriation Act (NAGPRA), 25 U.S.C. 3003 (d), of the completion of an inventory of human remains and associated funerary objects in the control of the Idaho State Office, Bureau of Land Management, Boise, ID.

A detailed assessment of the human remains was made by Bureau of Land Management professional staff in consultation with representatives of Shoshone-Paiute Tribes of the Duck Valley Reservation, Shoshone-Bannock Tribes of the Fort Hall Reservation, and the Northwestern Band of Shoshoni Indians of Utah.

In 1965, human remains representing two individuals were recovered from site 10LH 66, Lemhi County, ID during legally authorized excavations by the Idaho State University Museum. No known individuals were identified. The 31 associated funerary objects include glass beads, leather, harness fragments, metal buttons, a metal bracelet, textile fragments, and metal ornament fragments.

The presence and types of associated funerary objects indicates these individuals are Native American. The associated funerary objects are consistent with 19th century burials of the Lemhi Band of the Shoshone-Bannock Tribes who lived in this region until moved to the Fort Hall Reservation in 1907.

In 1996, one unassociated funerary object, a stone point, was located during the Bureau of Land Management's review of collections. This unassociated funerary object was originally associated with human remains and other associated funerary objects reburied in 1982 following criminal investigation of the looting and vandalizing of site 10LH 412, within the Lemhi reservation cemetery, by person(s) unknown. No known individuals were identified during this incident.

The Lehmi reservation cemetery (site 10LH 412) is a known historical cemetery of the Lehmi Band of the Shoshone-Bannock tribes. The Lehmi Band left the Lehmi Reservation in 1907 and went to the Fort Hall Reservation.

Based on the above mentioned information, officials of the Bureau of Land Management have determined that, pursuant to 43 CFR 10.2 (d)(1), the human remains listed above represent the physical remains of two individuals of Native American ancestry. Officials of the Bureau of Land Management have also determined that, pursuant to 43 CFR 10.2 (d), the 32 objects listed above are reasonably believed to have been placed with or near individual human remains at the time of death or later as part of the death rite or ceremony. Lastly, officials of the Bureau of Land Management have determined that, pursuant to 25 U.S.C. 3001 (2), there is a relationship of shared group identity which can be reasonably traced between these Native American human remains and associated funerary objects and the Shoshone-Paiute Tribes of the Duck Valley Reservation, Shoshone-Bannock Tribes of the Fort Hall Reservation, and the Northwestern Band of Shoshoni Indians of Utah.

This notice has been sent to officials of the Shoshone-Paiute Tribes of the Duck Valley Reservation, Shoshone-Bannock Tribes of the Fort Hall Reservation, and the Northwestern Band of Shoshoni Indians of Utah. Representatives of any other Indian tribe that believes itself to be culturally affiliated with these human remains and associated funerary objects should contact Daniel J. Hutchinson, State Office Archeologist, Idaho State Office, Bureau of Land Management, 1387 South Vinnell Way, Boise, ID 83709; telephone: (203) 373–3816, before September 12, 1997. Repatriation of the human remains and associated funerary objects to the Shoshone-Paiute Tribes of the Duck Valley Reservation, Shoshone-Bannock Tribes of the Fort Hall Reservation, and the Northwestern Band of Shoshoni Indians of Utah may begin after that date if no additional claimants come forward.

Dated: July 23, 1997.

Francis P. McManamon,

Departmental Consulting Archeologist, Manager, Archeology and Ethnography Program.

[FR Doc. 97–20323 Filed 8–12–97; 8:45 am]

BILLING CODE 4310–70–F

DEPARTMENT OF THE INTERIOR

National Park Service

Notice of Inventory Completion for Native American Human Remains and Associated Funerary Objects From Utah in the Control of the Manti-La Sal National Forest, United States Forest Service, Price, UT

AGENCY: National Park Service.

ACTION: Notice.

Notice is hereby given in accordance with provisions of the Native American Graves Protection and Repatriation Act (NAGPRA), 25 U.S.C. 3003 (d), of the completion of an inventory of human remains and associated funerary objects from Utah in the control of the Manti-La Sal National Forest, United States Forest Service, Price, UT.

A detailed assessment of the human remains was made by National Forest Service and Edge of the Cedars State Park and Museum professional staff in consultation with representatives of the Hopi Tribe; Navajo Nation; Kaibab Paiute Tribe; Paiute Tribe of Utah; Pueblo of Acoma; Pueblo of Cochiti; Pueblo of Isleta; Pueblo of Jemez; Pueblo of Laguna; Pueblo of Nambe; Pueblo of Picuris; Pueblo of Pojoque; Pueblo of Santa Clara; Pueblo of San Ildefonso; Pueblo of Santo Domingo; Pueblo of San Felipe; Pueblo of Laguna; Pueblo of Santa Ana; Pueblo of Sandia; Pueblo of San Juan; Pueblo of Tesuque; Pueblo of Taos; Pueblo of Zia; Pueblo of Zuni; San Juan Southern Paiute Tribe; Southern Ute Tribe; Uintah and Ouray Tribe of Utah; and Ute Mountain Ute Tribe.

In 1971, human remains representing one individual were recovered from Site 42SA12215 during legally authorized excavations by U.S. Forest Service archeologists. No known individual was identified. No associated funerary objects are present.

In 1973, human remains representing one individual were recovered from Site 42SA12213 during legally authorized excavations by U.S. Forest Service archeologists. No known individual was identified. The one associated funerary object is a ceramic sherd.

Around 1984, human remains representing one individual were recovered from Site 42SA10550 during investigations by U.S. Forest Service and law enforcement personnel concerning Archaeological Resources Protection Act (ARPA) violations. No known individual was identified. No associated funerary objects are present.

In 1987, human remains representing four individuals were recovered from Site 42SA12209 during legally

authorized excavations. No known individuals were identified. The two associated funerary objects include two stemmed projectile points.

These four sites have been identified as Ancestral Puebloan (Anasazi) Period occupations dating from approximately 750—1300 A.D. based on architecture, ceramics, stone artifacts, and site organization. Archeological evidence, including continuities of technology and site organization, indicates cultural affiliation between these sites and modern puebloan groups. Oral tradition evidence presented by representatives of the Hopi Tribe indicates Hopi affiliation with the Puebloan sites in the Elk Ridge and Abajo Mountain area of southeast Utah.

Based on the above mentioned information, officials of the United States Forest Service have determined that, pursuant to 43 CFR 10.2 (d)(1), the human remains listed above represent the physical remains of seven individuals of Native American ancestry. Officials of the United States Forest Service have also determined that, pursuant to 25 U.S.C. 3001 (3)(A), the three objects listed above are reasonably believed to have been placed with or near individual human remains at the time of death or later as part of the death rite or ceremony. Lastly, officials of the United States Forest Service have determined that, pursuant to 25 U.S.C. 3001 (2), there is a relationship of shared group identity which can be reasonably traced between these Native American human remains and associated funerary objects and the Hopi Tribe.

This notice has been sent to officials of the Hopi Tribe; Navajo Nation; Kaibab Paiute Tribe; Paiute Tribe of Utah; Pueblo of Acoma; Pueblo of Cochiti; Pueblo of Isleta; Pueblo of Jemez; Pueblo of Laguna; Pueblo of Nambe; Pueblo of Picuris; Pueblo of Pojoque; Pueblo of Santa Clara; Pueblo of San Ildefonso; Pueblo of Santo Domingo; Pueblo of San Felipe; Pueblo of Laguna; Pueblo of Santa Ana; Pueblo of Sandia; Pueblo of San Juan; Pueblo of Tesuque; Pueblo of Taos; Pueblo of Zia; Pueblo of Zuni; San Juan Southern Paiute Tribe; Southern Ute Tribe; Uintah and Ouray Tribe of Utah; and Ute Mountain Ute Tribe. Representatives of any other Indian tribe that believes itself to be culturally affiliated with these human remains and associated funerary objects should contact Stan McDonald, NAGPRA Coordinator, Manti-La Sal National Forest, 599 West Price River Drive, Price, UT 84501; telephone: (801) 637–2817, before September 12, 1997. Repatriation of the human remains and associated funerary objects to the Hopi Tribe may begin after that date if no additional claimants come forward.

Dated: August 6, 1997.

Veletta Canouts,

Acting Departmental Consulting Archeologist,

Assistant Manager, Archeology and Ethnography Program.

[FR Doc. 97–21398 Filed 8–12–97; 8:45 am]

BILLING CODE 4310–70–F

DEPARTMENT OF JUSTICE

Office of Police Corps and Law Enforcement Education (Office of Community Oriented Policing Services); Agency Information Collection Activities: Proposed Collection; Comment Request

ACTION: Notice of Information Collection Under Review; Police Corps Request for Scholarship Payment.

The proposed information collection is published to obtain comments from the public and affected agencies. Comments are encouraged and will be accepted for sixty days from the date listed at the top of this page in the **Federal Register.** Written comments and suggestions from the public and affected agencies concerning the proposed collection of information are requested. Comments should address one or more of the following four points:

(1) Evaluate whether the proposed collection of information is necessary for the proper performance of the functions of the agency, including whether the information will have practical utility;

(2) Evaluate the accuracy of the agency's estimate of the burden of the proposed collection of information, including the validity of the methodology and assumptions used;

(3) Enhance the quality, utility, and clarity of the information to be collected; and

(4) Minimize the burden of the collection of information on those who are to respond, including through the use of appropriate automated, electronic, mechanical, or other technological collection techniques or other forms of information technology, e.g., permitting electronic submission of responses.

Written comments and/or suggestions regarding the items contained in this notice, especially regarding the estimated public burden and associated response time, should be directed to the Office of Management and Budget, Office of Regulatory Affairs, Attention: Department of Justice Desk Officer, Washington, DC 20530. Additionally, comments may be submitted to OMB via facsimile to 202–395–7285. Comments may also be submitted to the Department of Justice (DOJ), Justice Management Division, Information Management and Security Staff, Attention: Department Clearance Officer, Suite 850, 1001 G Street, NW., Washington, DC 20530. Additionally, comments may be submitted to DOJ via facsimile to 202–514–1534. Written comments may also be submitted to Charlotte C. Grzebien, Associate General Counsel, Office of Community Oriented Policing Services, 1100 Vermont Avenue, NW., Washington, DC 20530, or via facsimile at (202) 514–3456.

Overvew of this information collection:

(1) Type of Information Collection: New collection.

(2) Title of the Form/Collection: Police Corps Request for Scholarship Payment.

(3) Agency form number, if any, and the applicable component of the Department of Justice sponsoring the collection: Form: COPS 21/01 and 21/02. Office of Police Corps and Law Enforcement Education, Office of Community Oriented Policing Services, U.S. Department of Justice.

(4) Affected public who will be asked or required to respond, as well as a brief abstract: Students who are Police Corps Scholarship recipients either as Police Corps Program participants or as the dependent children of fallen officers and their respective educational institutions will complete this form.

The Police Corps Request for Scholarship Payment will be completed by Police Corps scholarship recipients to obtain scholarship payments from the Office of Police Corps and Law Enforcement Education for estimated educational expenses per academic year. The information collected includes the estimated educational expenses projected for the academic year by the student and a certification by the recipient's college or university of the estimated annual educational expenses.

The Police Corps Request for Scholarship Payment is formatted both for Police Corps Participants (021/01) who were competitively selected to participate in the Police Corps program and for those students who are receiving Police Corps scholarships based on their status as the eligible dependents of fallen law enforcement officers (021/02).

(5) An estimate of the total number of respondents and the amount of time estimated for an average respondent to respond: Estimated number of Police Corps participant respondents: 1,000 (Form 021/01). Estimated number of Police Corps dependents of fallen

officers respondents: 80 (Form 021/02). Estimated time for average respondent to respond: 30 minutes (including recordkeeping).

(6) An estimate of the total public burden (in hours) associated with the collection: Approximately 539.8 annual burden hours.

If additional information is required contact: Mr. Robert B. Briggs, Clearance Officer, United States Department of Justice, Information Management and Security Staff, Justice Management Division, Suite 850, Washington Center, 1001 G Street, NW., Washington, DC 20530.

Dated: August 7, 1997.

Robert M. Zanger,

Attorney Advisor.

[FR Doc. 97–21295 Filed 8–12–97; 8:45 am]

BILLING CODE 4410–01–M

DEPARTMENT OF JUSTICE

Office of Police Corps and Law Enforcement Education (Office of Community Oriented Policing Services); Agency Information Collection Activities: Proposed Collection; Comment Request

ACTION: Notice of Information Collection Under Review; Police Corps Request for Reimbursement of Previous Educational Expenses.

The proposed information collection is published to obtain comments from the public and affected agencies. Comments are encouraged and will be accepted for sixty days from the date listed at the top of this page in the **Federal Register**.

Written comments and suggestions from the public and affected agencies concerning the proposed collection of information are requested. Comments should address one or more of the following four points:

(1) Evaluate whether the proposed collection of information is necessary for the proper performance of the functions of the agency, including whether the information will have practical utility;

(2) Evaluate the accuracy of the agency's estimate of the burden of the proposed collection of information, including the validity of the methodology and assumptions used;

(3) Enhance the quality, utility, and clarity of the information to be collected; and

(4) Minimize the burden of the collection of information on those who are to respond, including through the use of appropriate automated, electronic, mechanical, or other technological collection techniques or other forms of information technology, e.g., permitting electronic submission of responses.

Written comments and/or suggestions regarding the items contained in this notice, especially regarding the estimated public burden and associated response time, should be directed to the Office of Management and Budget, Office of Regulatory Affairs, Attention: Department of Justice Desk Officer, Washington, DC, 20530. Additionally, comments may be submitted to OMB via facsimile to 202–395–7285. Comments may also be submitted to the Department of Justice (DOJ), Justice Management Division, Information Management and Security Staff, Attention: Department Clearance Officer, Suite 850, 1001 G Street, NW., Washington, DC 20530. Additionally, comments may be submitted to DOJ via facsimile to 202–514–1534. Written comments may also be submitted to Charlotte C. Grzebien, Associate General Counsel, Office of Community Oriented Policing Services, 1100 Vermont Avenue, NW., Washington, DC 20530, or via facsimile at (202) 514–3456.

Overview of this information collection:

(1) Type of Information Collection: New collection.

(2) Title of the Form/Collection: Police Corps Request for Reimbursement of Previous Educational Expenses.

(3) Agency form number, if any, and the applicable component of the Department of Justice sponsoring the collection: Form: COPS 20/01 and 20/02. Office of Police Corps and Law Enforcement Education, Office of Community Oriented Policing Services, U.S. Department of Justice.

(4) Affected public who will be asked or required to respond, as well as a brief abstract: Students who are Police Corps Scholarship recipients either as Police Corps Program participants or as the dependent children of fallen officers and their respective educational institutions will complete this form.

The Police Corps Request for Reimbursement of Previous Educational Expenses will be completed by Police Corps scholarship recipients to obtain reimbursement from the Office of Police Corps and Law Enforcement Education for eligible educational expenses already incurred. The information collected includes the annual educational expenses which were incurred by the student and a certification by the recipient's college or university of the expenses for which reimbursement is sought.

The Police Corps Request for Reimbursement of Previous Educational Expenses is formatted both for Police Corps Participants (020/01) who were competitively selected to participate in the Police Corps program and for those students who are receiving Police Corps scholarships based on their status as the eligible dependents of fallen law enforcement officers (020/02).

(5) An estimate of the total number of respondents and the amount of time estimated for an average respondent to respond: Estimated number of Police Corps participant respondents: 900 (Form 020/01). Estimated number of Police Corps dependents of fallen officers respondents: 60 (Form 020/02). Estimated time for average respondent to respond: 30 minutes (including record-keeping).

(6) An estimate of the total public burden (in hours) associated with the collection: Approximately 480 annual burden hours.

If additional information is required contact: Mr. Robert B. Briggs, Clearance Officer, United States Department of Justice, Information Management and Security Staff, Justice Management Division, Suite 850, Washington Center, 1001 G Street, NW, Washington, DC 20530.

Dated: August 7, 1997.

Robert M. Zanger,

Attorney Advisor.

[FR Doc. 97–21296 Filed 8–12–97; 8:45 am]

BILLING CODE 4410–01–M

DEPARTMENT OF JUSTICE

Office of Police Corps and Law Enforcement Education, Office of Community Oriented Policing Services; Agency Information Collection Activities: Proposed Collection; Comment Request

ACTION: Notice of information collection under review; Police Corps request for reimbursement of previous educational expenses.

Office of Management and Budget (OMB) approval is being sought for the information collection listed below. This proposed information collection was previously published in the **Federal Register** and allowed 60 days for public comment.

The purpose of this notice is to allow an additional 30 days for public comments from the date listed at the top of this page in the **Federal Register**. This process is conducted in accordance with 5 Code of Federal Regulation, § 1320.10.

Written comments and/or suggestions regarding the item(s) contained in this notice, especially regarding the

estimated public burden and associated response time, should be directed to the Office of Management and Budget, Office of Regulatory Affairs, Attention: Department of Justice Desk Officer, Washington, DC, 20530. Additionally, comments may be submitted to OMB via facsimile to 202–395–7285. Comments may also be submitted to the Department of Justice (DOJ), Justice Management Division, Information Management and Security Staff, Attention: Department Clearance Officer, Suite 850, 1001 G Street, NW, Washington, DC 20530. Additionally, comments may be submitted to DOJ via facsimile to 202–514–1534. Written comments may also be submitted to Charlotte C. Grzebien, Associate General Counsel, Office of Community Oriented Policing Services, 1100 Vermont Avenue, NW., Washington, D.C. 20530, or via facsimile at (202) 514–3456.

Written comments and suggestions from the public and affected agencies should address one or more of the following points:

(1) Evaluate whether the proposed collection of information is necessary for the proper performance of the functions of the agency/component, including whether the information will have practical utility;

(2) Evaluate the accuracy of the agency's/component's estimate of the burden of the proposed collection of information, including the validity of the methodology and assumptions used;

(3) Enhance the quality, utility, and clarity of the information to be collected; and

(4) Minimize the burden of the collection of information on those who are to respond, including through the use of appropriate automated, electronic, mechanical, or other technological collection techniques or other forms of information technology, e.g., permitting electronic submission of responses.

The proposed collection is listed below:

Police Corps Request for Reimbursement of Previous Educational Expenses.

(1) Type of information collection: New collection

(2) The title of the form/collection: Police Corps Request for Reimbursement of Previous Educational Expenses.

(3) The agency form number, if any, and the applicable component of the Department sponsoring the collection: Form: COPS 020/01 and 020/02. Office of Police Corps and Law Enforcement Education, Office of Community Oriented Policing Services, United States Department of Justice.

(4) Affected public who will be asked or required to respond, as well as a brief abstract: Students who are Police Corps Scholarship recipients either as Police Corps Program participants or as the dependent children of fallen officers and their respective educational institutions will complete this form.

The Police Corps Request for Reimbursement of Previous Educational Expenses will be completed by Police Corps scholarship recipients to obtain reimbursement from the Office of Police Corps and Law Enforcement Education for eligible educational expenses already incurred. The information collected includes the annual educational expenses which were incurred by the student and certification by the recipient's college or university of the expenses for which reimbursement is sought.

The Police Corps Request for Reimbursement of Previous Educational Expenses is formatted both for Police Corps Participants (020/01) who were competitively selected to participate in the Police Corps program and for those students who are receiving Police Corps scholarships based on their status as the eligible dependents of fallen law enforcement officers (020/02).

(5) An estimate of the total number of respondents and the amount of time estimated for an average respondent to respond: Estimated number of Police Corps participant respondents: 900 (Form 020/01). Estimated number of Police Corps dependents of fallen officers respondents: 60 (Form 020/02). Estimated time for average respondent to respond: 30 minutes (including record-keeping).

(6) An estimate of the total public burden (in hours) associated with the collection: Approximately 480 hours.

Public comment on this proposed information collection is strongly encouraged.

Dated: August 7, 1997.

Robert M. Zanger,

Attorney Advisor.

[FR Doc. 97–21297 Filed 8–12–97; 8:45 am]

BILLING CODE 4410–01–M

DEPARTMENT OF JUSTICE

[AAG/A Order No. 141–97]

Privacy Act of 1974; As Amended by The Computer Matching and Privacy Protection Act of 1988

This notice is published in the **Federal Register** in accordance with the requirements of the Privacy Act, as amended by the Computer Matching and Privacy Protection Act of 1988 (CMPPA) (5 U.S.C. 552a(e)(12)). The Immigration and Naturalization Service (INS), Department of Justice (the source agency), is participating in a computer matching program with the Massachusetts Department of Employment and Training (MA–DET) (the recipient agency). Matching activities under this program will permit MA–DET to confirm the immigration status of alien applicants for, or recipients of, unemployment compensation benefits under the ''Systematic Alien Verification for Entitlements (SAVE)'' program as required by the Immigration Reform and Control Act (IRCA) of 1986 (Pub. L. 99–603).

Section 121(c) of IRCA amended section 1137 of the Social Security Act and other statutes to require agencies which administer the Federal Benefits programs designated within IRCA to use the INS verification system to determine eligibility. Accordingly, through the use of user identification codes and passwords, authorized persons from these agencies may electronically access the database of an INS system of records entitled ''Alien Status Verification Index, Justice/INS–009.'' From its automated records system, MA–DET may enter electronically into the INS database the alien registration number of the applicant or recipient. This action will initiate a search of the INS database for a corresponding alien registration number. Where such number is located, MA–DET will receive electronically from the INS database the following data upon which to determine eligibility: Alien registration number, last name, first name, date of birth, country of birth, social security number (if available), data of entry, immigration status data, and employment eligibility data. In accordance with 5 U.S.C. 552a(p), MA–DET will provide the alien applicant with 30 days notice and an opportunity to contest any adverse finding before final action is taken against that alien because of ineligible immigration status as established through the computer match.

The original effective date of the matching programs was February 28, 1990, for which notice was published in the **Federal Register** on January 29, 1990 (55 FR 2890). The program has continued to date under the authority of a series of new approvals as required by the CMPPA. The CMPPA provides that based upon approval by agency Data Integrity Boards of a new computer matching agreement, computer matching activities may be conducted for 18 months and, contingent upon specific conditions, may be similarly extended by the Board for an additional

year without the necessity of a new agreement. The most recent one-year extension for this program will expire on September 9, 1997. Therefore, the Department's Data Integrity Board has approved a new agreement to permit the continuation of the above-named computer matching program for another 18-month period from the effective date (described below).

Matching activities under the new agreement will be effective 30 days after publication of this computer matching notice in the **Federal Register**, or 40 days after a report concerning the computer matching program has been transmitted to the Office of Management and Budget, and transmitted to Congress along with a copy of the agreements, whichever is later. The agreement (and matching activities) will continue for a period of 18 months from the effective date—unless, within 3 months prior to the expiration of the agreement, the Data Integrity Board approves a one-year extension pursuant to 5 U.S.C. 552a(o)(2)(D).

In accordance with 5 U.S.C. 552a(o)(2)(A) and (r), the required report is being provided to the Office of Management and Budget, and to the Congress together with a copy of the agreement.

Inquiries may be addressed to Patricia E. Neely, Program Analyst, Information Resources Management, Justice Management Division, Information Management and Security Staff, Department of Justice, Washington, DC 20530.

Dated: August 7, 1997.

Stephen R. Colgate,

Assistant Attorney General for Administration.

[FR Doc. 97–21298 Filed 8–12–97; 8:45 am]

BILLING CODE 4410–10–M

DEPARTMENT OF LABOR

Employment and Training Administration

[TA–W–33,548 and TA–W–33,548A]

C.O.L.A., Jersey City, New Jersey and New York, New York; Amended Certification Regarding Eligibility To Apply for Worker Adjustment Assistance

In accordance with Section 223 of the Trade Act of 1974 (19 USC 2273) the Department of Labor issued a Certification of Eligibility to Apply for Worker Adjustment Assistance on June 6, 1997, applicable to all workers of C.O.L.A. located in Jersey City, New Jersey. The notice was published in the Federal Register on June 27, 1997 (62 FR 34711).

At the request of the company, the Department reviewed the certification for workers of the subject firm. New information received by the company shows that worker separations occurred at the New York, New York location of C.O.L.A. when the entire company closed in May, 1997. The New York, New York location was a showroom for piece good purchasing, sales and styling for the Jersey City, New Jersey location.

The intent of the Department's certification is to include all workers of C.O.L.A. who were adversely affected by increased imports of ladies' skirts, pants and shorts. Accordingly, the Department is amended the certification to cover the workers of C.O.L.A., New York, New York.

The amended notice applicable to TA–W–33,548 is hereby issued as follows:

All workers of C.O.L.A., Jersey City, New Jersey (TA–W–33,548), and New York, New York (TA–W–33,548A) who became totally or partially separated from employment on or after April 15, 1996 are eligible to apply for adjustment assistance under Section 223 of the Trade Act of 1974.

Signed at Washington D.C. this 30th day of July 1997.

Grant D. Beale,

Acting Director, Office of Trade Adjustment.

[FR Doc. 97–21393 Filed 8–12–97; 8:45 am]

BILLING CODE 4510–30–M

DEPARTMENT OF LABOR

Employment and Training Administration

Investigations Regarding Certifications of Eligibility To Apply For Worker Adjustment Assistance

Petitions have been filed with the Secretary of Labor under Section 221(a) of the Trade Act of 1974 (''the Act'') and are identified in the Appendix to this notice. Upon receipt of these petitions, the Program Manager of the Office of Trade Adjustment Assistance, Employment and Training Administration, has instituted investigations pursuant to Section 221(a) of the Act.

The purpose of each of the investigations is to determine whether the workers are eligible to apply for adjustment assistance under Title II, Chapter 2, of the Act. The investigations will further relate, as appropriate, to the determination of the date on which total or partial separations began or threatened to begin and the subdivision of the firm involved.

The petitioners or any other persons showing a substantial interest in the subject matter of the investigations may request a public hearing, provided such request is filed in writing with the Program Manager, Office of Trade Adjustment Assistance, at the address shown below, not later than August 25, 1997.

Interested persons are invited to submit written comments regarding the subject matter of the investigations to the Program Manager, Office of Trade Adjustment Assistance, at the address shown below, not later than August 25, 1997.

The petitions filed in this case are available for inspection at the Office of the Program Manager, Office of Trade Adjustment Assistance, Employment and Training Administration, U.S. Department of Labor, 200 Constitution Avenue, N.W., Washington, D.C. 20210.

Signed at Washington, D.C. this 28th day of July, 1997.

Grant D. Beale,

Acting Director, Office of Trade Adjustment Assistance.

APPENDIX

[Petitions instituted on 7/28/97]

TA–W	Subject firm (petitioners)	Location	Date of petition	Product(s)
33,679	Devil Dog (Wrks)	Newton Grove, NC	07/18/97	Boys' & Girls' Jeans, Shorts, Slacks.
33,680	Tubafor Mill (Wrks)	Amanda Park, WA	07/15/97	Cedar and Hemlock Fencing.
33,681	Elgin e2, Inc. (Wrks)	Erie, PA	07/14/97	Power Supplies.
33,682	Allen Bradley (Wrks)	Rhinelander, WI	07/15/97	Industrial Controls.

APPENDIX—Continued

[Petitions instituted on 7/28/97]

TA–W	Subject firm (petitioners)	Location	Date of petition	Product(s)
33,683	Lucas Varity Kelsey-Hayes (Co.)	Brighton, MI	07/15/97	Anti Brake System Sensors.
33,684	Memorex Telex (Wrks)	Raleigh, NC	07/14/97	Computer Products.
33,685	Connie Casuals Limited (Co.)	Bangor, PA	07/03/97	Ladies' Blouses and Smocks.
33,686	Basler Electric (Co.)	Pharr, TX	07/14/97	High Frequency Transformers.
33,687	Bend Manufacturing Co (Co.)	Bend, OR	07/15/97	Fingerjoint Blocks.
33,688	Maxus Energy (Co.)	Dallas, TX	07/15/97	Crude Oil and Natural Gas.
33,689	Copper Range (USWA)	White Pine, MI	07/16/97	Anode and Cathode Copper.
33,690	Bemis Company (Wrks)	Pepperell, MA	07/11/97	Bags and Paper Industrial Bags.

[FR Doc. 97–21391 Filed 8–12–97; 8:45 am]

BILLING CODE 4510–30–M

DEPARTMENT OF LABOR

Employment and Training Administration

[TA–W–33,216]

Gruen Marketing Corporation, Exeter, Pennsylvania; Notice of Negative Determination Regarding Application for Reconsideration

By application dated March 18, 1997, one of the petitioners requested administrative reconsideration of the Department's negative determination regarding worker eligibility to apply for trade adjustment assistance. The denial notice applicable to workers of the subject firm located in Exeter, Pennsylvania, was signed on February 26, 1997 and published in the Federal Register on March 21, 1997 (62 CFR 13709).

Pursuant to 29 CFR 90.18(c) reconsideration may be granted under the following circumstances:

(1) If it appears on the basis of facts not previously considered that the determination complained of was erroneous;

(2) if it appears that the determination complained of was based on a mistake in the determination of facts not previously considered; or

(3) if in the opinion of the Certifying Officer, a misinterpretation of facts or of the law justified reconsideration of the decision.

Findings of the initial investigation showed that workers of Gruen Marketing Corporation, Exeter, Pennsylvania were engaged in employment related to the merchandising of imported watches. The workers at the Exeter facility provided warehousing, packaging and distribution services. The Department's denial of TAA for workers of the subject firm was based on the fact that the workers provided a service and did not produce an article within the meaning of the group eligibility requirements of Section 222 of the Trade Act of 1974, as amended.

The petitioner claims that since the workers installed batteries, performed watch repair, packaged and bar coded the product, the work performed should be considered producing a product.

The company official reports that the Exeter facility was a packaging and shipping facility. Battery installation constituted only a minuscule part of the Exeter plant's work. With respect to watch repair, there was a department at the subject plant that did warranty work, including battery replacement. It also handled stock repairs, which involved refurbishing watches.

Packaging and refurbishing of foreign production does not constitute a basis for a worker group certification under the Trade Act of 1974, as amended.

Conclusion

After review of the application and investigative findings, I conclude that there has been no error or misinterpretation of the law or of the facts which would l justify reconsideration of the Department of Labor's prior decision. Accordingly, the application is denied.

Signed at Washington, D.C. this 30th day of July 1997.

Grant D. Beale,

Acting Director, Office of Trade Adjustment Assistance.

[FR Doc. 97–21394 Filed 8–12–97; 8:45 am]

BILLING CODE 4510–30–M

DEPARTMENT OF LABOR

Employment and Training Administration

[TA–W–33,050; TA–W–33,050F; TA–W–33,050G]

Ithaca Industries, Incorporated, Thomasville, Georgia, Meigs, Georgia, and Women's Division Management Center, Cairo, Georgia; Amended Certification Regarding Eligibility To Apply for Worker Adjustment Assistance

In accordance with Section 223 of the Trade Act of 1974 (19 U.S.C. 2273) the Department of Labor issued a Certification of Eligibility to Apply for Worker Adjustment Assistance on February 14, 1997, applicable to all workers of Ithaca Industries, Inc., Thomasville, Georgia. The notice was published in the **Federal Register** on April 29, 1997 (62 23273).

At the request of a company official, the Department reviewed the certification for workers of the subject firm. New information shows that worker separations will occur at the subject firms' Meigs and Cairo, Georgia locations when they close in August and October 1997, respectively. Workers at the Meigs, Georgia location are engaged in the production of women's and men's undergarments. Workers at the Women's Division Management Center, Cairo, Georgia provide administrative and support function services to the production facilities of Ithaca Industries, Incorporated. Based on these new findings, the Department is amending the certification to cover workers at the Meigs and Cairo, Georgia locations.

The intent of the Department's certification is to include all workers of Ithaca Industries, Inc. adversely affected by increased imports.

The amended notice applicable to TA–W–33,050 is hereby issued as follows:

All workers of Ithaca Industries, Inc., Thomasville, Georgia (TA–W–33,050), Meigs, Georgia (TA–W–33,050F), and Women's Division Management Center, Cairo, Georgia (TA–W–33,050G) who became totally or partially separated from employment on or after December 4, 1995 are eligible to apply for adjustment assistance under Section 223 of the Trade Act of 1974.

Signed at Washington, D.C. this 31st day of July, 1997.

Grant D. Beale,

Acting Director, Office of Trade Adjustment Assistance.

[FR Doc. 97–21395 Filed 8–12–97; 8:45 am]

BILLING CODE 4510–30–M

DEPARTMENT OF LABOR

Employment and Training Administration

[NAFTA–01548 and TA–W–33,336]

Inland Paperboard and Packaging Inc., Erie, Pennsylvania; Notice of Affirmative Determination Regarding Application for Reconsideration

By letters of April 30 and May 1, 1997, the United Paperworkers International Union requested administrative reconsideration of the Department of Labor's Notices of Negative Determination Regarding Eligibility to Apply for NAFTA-Transitional Adjustment Assistance, petition NAFTA–01548 and Worker Adjustment Assistance, petition TA–W–33,336. The denial notices for NAFTA–01548 and TA–W–33,336 were signed on April 1, 1997 and published in the **Federal Register** on May 2, 1997 (62 FR 24135), and April 25, 1997 (62 FR 18362), respectively.

The petitioners' request claims that production of boxes in Mexico will increase when the Erie plant closes. Review of the Department's investigation shows that the survey of the subject firm's customers was incomplete.

Conclusion

After careful review of the application, I conclude that the claim is of sufficient weight to justify reconsideration of the Department of Labor's prior decision. The application is, therefore, granted.

Signed at Washington, D.C. this 31st day of July 1997.

Grant D. Beale,

Acting Director, Office of Trade Adjustment Assistance.

[FR Doc. 97–21397 Filed 8–12–97; 8:45 am]

BILLING CODE 4510–30–M

DEPARTMENT OF LABOR

Employment and Training Administration

NAFTA–01562

Lithonia Lighting Conyers, Georgia; Notice of Affirmative Determination Regarding Application for Reconsideration

By letter of April 29, 1997, one of the petitioners requested administrative reconsideration of the Department of Labor's Notice of Negative Determination Regarding Eligibility to Apply for NAFTA-Transitional Adjustment Assistance, applicable to petition number NAFTA–01562. The denial notice was signed on April 1, 1997 and published in the **Federal Register** on April 15, 1997 (62 FR 18362).

The petitioner presents evidence that the Department's investigation was incomplete.

Conclusion

After careful review of the application, I conclude that the claim is of sufficient weight to justify reconsideration of the Department of Labor's prior decision. The application is, therefore, granted.

Signed at Washington, D.C. this 31st day of July 1997.

Grant D. Beale,

Acting Director, Office of Trade Adjustment Assistance.

[FR Doc. 97–21396 Filed 8–12–97; 8:45 am]

BILLING CODE 4510–30–M

DEPARTMENT OF LABOR

Employment and Training Administration

[NAFTA–01571]

Washington Public Power Supply System, Richland, Washington; Notice of Negative Determination Regarding Application for Reconsideration

By application dated April 23, 1997, Local Union No. 77 of the International Brotherhood of Electrical Workers requested administrative reconsideration of the Department's negative determination regarding worker eligibility to apply for NAFTA-Transitional Adjustment Assistance (NAFTA–TAA). The denial notice applicable to workers of the subject firm located in Richland, Washington, was signed on March 21, 1997 and published in the **Federal Register** on April 15, 1997 (62 FR 18361).

Pursuant to 29 CFR 90.18(c) reconsideration may be granted under the following circumstances:

(1) If it appears on the basis of facts not previously considered that the determination complained of was erroneous;

(2) if it appears that the determination complained of was based on a mistake in the determination of facts not previously considered; or

(3) if in the opinion of the Certifying Officer, a misinterpretation of facts or of the law justified reconsideration of the decision.

Findings of the initial investigation showed that workers of Washington Public Power Supply System, Richland, Washington were engaged in employment related to the production of electricity. The Department's denial of NAFTA–TAA for workers of the subject firm was based on the determination that criterion (3) and (4) of the Group Eligibility requirements of paragraph (a)(1) of Section 250 of the Trade Act of 1974, as amended, were not met.

There was no shift in the production of electricity from Washington Public Power Supply System to Mexico or Canada, nor did the subject firm import electricity from Mexico or Canada. The Department's survey of Washington Public Power Supply System's sole customer revealed that the customer switched its purchases from the subject firm to other domestic sources of electricity.

The petitioner asserts that the sale of electricity from the nuclear production of energy is in fact being shifted to less expensive suppliers like gas, hydro and coal, along with solar and wind. The petitioner adds that severe price competition from producers of these alternate sources of power, such as combustion turbines fired by natural gas imported from Canada, has led to severe cost cutting measures at the Supply System. The petitioner claims that any energy source that replaces electricity is a direct replacement of the product.

In determining worker group eligibility for NAFTA–TAA, the Department must examine import impact of the articles produced at the worker's firm. In this case, workers at Washington Public Power Supply System produced electricity. The expenditures that would be required to switch from an electricity production facility to another source of power generation such as gas, would be prohibitive because of the machinery, equipment and technology that would be necessary to effect such a conversion. Therefore, gas and other power generating sources cannot be considered

like or directly competitive with electricity.

The petitioner also claims that generators and other parts and equipment for the production of electricity are being imported from Mexico by competitors. This is not a basis for certification of the Washington Power Supply System workers.

Conclusion

After review of the application and investigative findings, I conclude that there has been no error or misintepretation of the law or of the facts which would justify reconsideration of the Department of Labor's prior decision. Accordingly, the application is denied.

Signed at Washington, D.C. this 1st day of August 1997.

Grant D. Beale,

Acting Director, Office of Trade Adjustment Assistance.

[FR Doc. 97–21392 Filed 8–12–97; 8:45 am]

BILLING CODE 4510–30–M

DEPARTMENT OF LABOR

Occupational Safety and Health Administration

[Docket No. ICR–97–6]

Agency Information Collection Activities; Announcement of OMB Approval

AGENCY: Occupational Safety and Health Administration.

ACTION: Notice.

SUMMARY: The Occupational Safety and Health Administration (OSHA) is announcing that a collection of information regarding the reporting of occupational fatality or multiple hospitalization incidents has been approved by the Office of Management and Budget (OMB) under the Paperwork Reduction Act of 1995. This document announces the OMB approval number and expiration date.

FOR FURTHER INFORMATION CONTACT: Stephen Newell, Office of Statistics, Occupational Safety and Health Administration, U.S. Department of Labor, Room N3507, 200 Constitution Avenue, NW, Washington, D.C. 20210, telephone (202) 219–6463.

SUPPLEMENTARY INFORMATION: In the **Federal Register** of March 13, 1997 (62 FR 11928), the Agency announced its intent to request renewal of its current OMB approval for 29 CFR 1904.8, Reporting of Fatality or Multiple Hospitalization Incidents. In accordance with the Paperwork Reduction Act of 1995 (44 U.S.C. 3501–3520), OMB has renewed its approval for the information collection and assigned OMB control number 1218–0007. The approval expires 7/31/2000. Under 5 CFR 1320.5(b), an Agency may not conduct or sponsor, and a person is not required to respond to, a collection of information unless the collection displays a valid control number.

Dated: August 5, 1997.

Gregory R. Watchman,

Acting Assistant Secretary of Labor

[FR Doc. 97–21390 Filed 8–12–97; 8:45 am]

BILLING CODE 4510–26–M

NATIONAL AERONAUTICS AND SPACE ADMINISTRATION

[Notice 97–113]

NASA Advisory Council (NAC): Earth Systems Science and Applications Advisory Committee Meeting

AGENCY: National Aeronautics and Space Administration.

ACTION: Notice of meeting.

SUMMARY: In accordance with the Federal Advisory Committee Act, Pub. L. 92–463, as amended, the National Aeronautics and Space Administration announces a meeting of the NASA Advisory Council.

DATES: September 4, 1997, 8:30 a.m. to 5:00 p.m.; and September 5, 1997, 8:30 a.m. to 5:00 p.m.

ADDRESSES: NASA Headquarters, Room MIC7, 300 E Street, SW, Washington, DC 20546.

FOR FURTHER INFORMATION CONTACT: Dr. Robert A. Schiffer, Code YS, National Aeronautics and Space Administration, Washington, DC 20546, 202/358–1876.

SUPPLEMENTARY INFORMATION: The meeting will be open to the public up to the seating capacity of the room. The agenda for the meeting is as follows:

—Summary of Biennial Review Results
—Current Project Priorities and Oversight
—Framework for Science Management and Implementation
—EOSDIS Status Report
—MTPE Technology Plans and Programs
—ESSP Future Plans
—R&A deliverables vs Cost Tradeoffs

It is imperative that the meeting be held on these dates to accommodate the scheduling priorities of the key participants. Visitors will be requested to sign a visitor's register.

Dated: August 6, 1997.

Leslie M. Nolan,

Advisory Committee Management Officer, National Aeronautics and Space Administration.

[FR Doc. 97–21300 Filed 8–12–97; 8:45 am]

BILLING CODE 7510–01–M

NATIONAL AERONAUTICS AND SPACE ADMINISTRATION

[Notice 97–112]

NASA Advisory Council, Life and Microgravity Sciences and Applications Advisory Committee; Meeting

AGENCY: National Aeronautics and Space Administration.

ACTION: Notice of meeting.

SUMMARY: In accordance with the Federal Advisory Committee Act, Pub. L. 92–463, as amended, the National Aeronautics and Space Administration announces a meeting of the NASA Advisory Council, Life and Microgravity Sciences and Applications Advisory Committee.

DATES: September 11, 1997, 8:30 a.m. to 6:00 p.m.; and September 12, 1997, 8:00 a.m. to 12:30 p.m.

ADDRESSES: NASA Headquarters, Room MIC 7, 300 E Street, SW., Washington, DC 20546.

FOR FURTHER INFORMATION CONTACT:

Mr. Robert C. Rhome, Code UG, National Aeronautics and Space Administration, Washington, DC 20546, 202/358–1490.

SUPPLEMENTARY INFORMATION: The meeting will be open to the public up to the seating capacity of the room. The agenda for the meeting is as follows:

—Status of the Office of Life and Microgravity Sciences and Applications (OLMSA)
—Mir Status and Discussion of the Revised Mir Research Program
—Review of the Research Plan for the International Space Station
—Review of the Evolving OLMSA Program Performance Goals
—Subcommittee/Task Force Reports
—Discussion of Committee Findings and Recommendations

It is imperative that the meeting be held on these dates to accommodate the scheduling priorities of the key participants. Visitors will be requested to sign a visitor's register.

Dated: August 6, 1997.

Leslie M. Nolan,

Advisory Committee Management Officer, National Aeronautics and Space Administration.

[FR Doc. 97–21299 Filed 8–12–97; 8:45 am]

BILLING CODE 7510–01–M

NATIONAL ARCHIVES AND RECORDS ADMINISTRATION

Records Schedules; Availability and Request for Comments

AGENCY: National Archives and Records Administration, Office of Records Services.

ACTION: Notice of availability of proposed records schedules; request for comments.

SUMMARY: The National Archives and Records Administration (NARA) publishes notice at least once monthly of certain Federal agency requests for records disposition authority (records schedules). Records schedules identify records of sufficient value to warrant preservation in the National Archives of the United States. Schedules also authorize agencies after a specified period to dispose of records lacking administrative, legal, research, or other value. Notice is published for records schedules that propose the destruction of records not previously authorized for disposal, or reduce the retention period for records already authorized for disposal. NARA invites public comments on such schedules, as required by 44 U.S.C. 3303a(a).

DATES: Requests for copies must be received in writing on or before September 29, 1997. Once the appraisal of the records is completed, NARA will send a copy of the schedule. The requester will be given 30 days to submit comments.

ADDRESSES: Address requests for single copies of schedules identified in this notice to the Civilian Appraisal Staff (NWRC), National Archives and Records Administration, 8601 Adelphi Road, College Park, MD 20740–6001. Requesters must cite the control number assigned to each schedule when requesting a copy. The control number appears in the parentheses immediately after the name of the requesting agency.

FOR FURTHER INFORMATION CONTACT: Michael L. Miller, Director, Records Management Programs, National Archives and Records Administration, 8601 Adelphi Road, College Park, MD 20740–6001, telephone (301)713–7110.

SUPPLEMENTARY INFORMATION: Each year U.S. Government agencies create billions of records on paper, film, magnetic tape, and other media. In order to control this accumulation, agency records managers prepare records schedules specifying when the agency no longer needs the records and what happens to the records after this period. Some schedules are comprehensive and cover all the records of an agency or one of its major subdivisions. These comprehensive schedules provide for the eventual transfer to the National Archives of historically valuable records and authorize the disposal of all other records. Most schedules, however, cover records of only one office or program or a few series of records, and many are updates of previously approved schedules. Such schedules also may include records that are designated for permanent retention.

Destruction of records requires the approval of the Archivist of the United States. This approval is granted after a thorough study of the records that takes into account their administrative use by the agency of origin, the rights of the Government and of private persons directly affected by the Government's activities, and historical or other value.

This public notice identifies the Federal agencies and their subdivisions requesting disposition authority, includes the control number assigned to each schedule, and briefly describes the records proposed for disposal. The records schedule contains additional information about the records and their disposition. Further information about the disposition process will be furnished to each requester.

Schedules Pending

1. Department of the Air Force (N1–AFU–97–17). Communicable and other reportable disease reports maintained in electronic form.
2. Department of the Army (N1–AU–97–5). Duplicative casualty case files. Files maintained by office having Army-wide responsibility scheduled as permanent.
3. Department of Commerce, National Oceanic and Atmospheric Administration (N1–370–96–9). Real property report files.
4. Department of Health and Human Services, Health Care Financing Agency (N1–440–95–1). Records relating to development of regulations and Medicare administration.
5. Department of Housing and Urban Development (N1–207–97–5). Secretary—s cancelled trip and declination files.
6. Department of Justice, Immigration and Naturalization Service (N1–85–97–4). Form I–850 and Designated Entity Information Management System.
7. Department of the Justice, United States Marshals Service (N1–527–97–10). Records of the USMS Training Academy.
8. Department of Justice, United States Marshals Service (N1–527–97–11). Civil litigation case files and legal opinion review files.
9. National Archives and Records Administration (N1–GRS–97–2). Federal employee transportation subsidy records.
10. Panama Canal Commission (N1–185–97–17). Maintenance and public utility records.
11. Tennessee Valley Authority (N1–142–97–21). Methylphosphonic dichloride purification contract records.

Dated: August 5, 1997.

Michael J. Kurtz,

Assistant Archivist for Record Services, Washington, DC.

[FR Doc. 97–21344 Filed 8–12–97; 8:45 am]

BILLING CODE 7515–01–P

NATIONAL FOUNDATION ON THE ARTS AND HUMANITIES

Institute of Museum and Library Services, Office of Museum Services; Submission for OMB Review; Comment Request

August 8, 1997.

AGENCY: Institute of Museum and Library Services, NFAH.

SUMMARY: The Institute of Museum and Library Services has submitted the following public information collection request (ICR) to the Office of Management and Budget (OMB) for review and approval in accordance with the Paperwork Reduction Act of 1995 (Pub. L. 104–13, 44 U.S.C. Chapter 35). Copies of these individual ICRs, with applicable supporting documentation, may be obtained by contacting the Institute of Museum and Library Services Public Information Officer, Tania Said at (202) 606–4646 or tsaid@ims.fed.us. Individuals who use a telecommunications device for the deaf (TTY/TTD) may call (202) 606–8636 between 8:30 a.m. and 6:00 p.m. Eastern time, Monday through Friday.

Comments should be sent to Office of Information and Regulatory Affairs, Attn: OMB Desk Officer for Institute of Museum and Library Services, Office of Management and Budget, Room 10235, Washington, DC 20503 (202) 395–7316, within (30 days from the date of this publication in the **Federal Register**).

The OMB is particularly interested in which:

• Evaluate whether the proposed collection of information is necessary

for the proper performance of the functions of the agency, including whether the information will have practical utility;

• Evaluate the accuracy of the agency's estimate of the burden of the proposed collection of information including the validity of the methodology and assumptions used;

• Enhance the quality, utility and clarity of the information to be collected; and

• Minimize the burden of the collection of information on those who are to respond, including through the use of appropriate automated electronic, mechanical, or other technological collection techniques or other forms of information technology, e.g., permitting electronic submissions of responses.

Agency: Institute of Museum and Library Services.

Title: IMLS OMS Guidelines, Interim and Final Performance Reports.

OMB Number: 3137–0029.

Agency Number: 3137.

Frequency: Once.

Affected Public: Eligible museums.

Number of Respondents: 679.

Estimated Time Per Respondent: 1–40 hours (time varies by form, please see chart).

Total Burden Hours: 6,751.

Total Annualized capital/startup costs: 0.

Total Annual Costs: 0.

FOR FURTHER INFORMATION CONTACT: Tania Said, Public Information Officer, Institute of Museum and Library Services, 1100 Pennsylvania Avenue, N.W., Washington, DC 20506, telephone (202) 606–4646.

Tania Said,

Public Information Officer.

Title of publication	Burden hours
Museum Assessment Program (MAP) Grant and Application Guidelines	2 hours.
MAP Final Performance Report	1 hour.
Conservation Assessment Program (CAP) Grant and Application Guidelines	1 hour.
CAP Final Performance Report	1 hour.
Conservation Project (CP) Grant Application and Guidelines	9 hours.
CP Interim Performance Report	1 hour.
CP Final Performance Report	1 hour.
General Operating Support (GOS) Grant Application and Guidelines	18 hours.
GOS Final Performance Report	1 hour.
Professional Services Program (PSP) Grant Application and Guidelines	4 hours.
PSP Interim Performance Report	1 hour.
PSP Final Performance Report	1 hour.
Museum Leadership Initiative (MLI) Grant Application and Guidelines	40 hours.
MLI Final Performance Report	1 hour.

For public distribution.

[FR Doc. 97–21354 Filed 8–12–97; 8:45 am]

BILLING CODE 7036–01–M

NUCLEAR REGULATORY COMMISSION

[IA 97–065]

Order Prohibiting Involvement in NRC-Licensed Activities (Effective Immediately) Pending Further Order; Aharon Ben-Haim, Ph.D., Upper Montclair, New Jersey

I

Aharon Ben-Haim, Ph.D. (Dr. Ben-Haim), Medical Physicist, Upper Montclair, New Jersey, is a consultant for Newark Medical Associates, P.A. (licensee), the holder of Byproduct Nuclear Material License No. 29–30282–01 (license) issued by the Nuclear Regulatory Commission (NRC or Commission) pursuant to 10 CFR part 30. The license authorizes possession and use of any radiopharmaceutical identified in 10 CFR 35.200 for any imaging and localization procedure approved in 10 CFR 35.200. The license was originally issued on September 25, 1996, and is due to expire on September 30, 2001.

II

On January 29, 1997, the NRC conducted an inspection at the licensee's facility in Newark, New Jersey. During the inspection, several apparent violations of NRC requirements were identified. One of the violations involved the continued use of radioactive material by the licensee despite the fact that the only authorized user listed on the license (who was also listed as the Radiation Safety Officer (RSO)), had not ever performed any authorized user or RSO duties and had not ever been affiliated with the company. Specifically, Gerard W. Moskowitz, M.D. (Dr. Moskowitz), was listed on the application as the RSO and authorized user without his knowledge. Dr. Moskowitz did not become aware that he was listed on the application and the license until notified by the NRC on February 6, 1997, more than four months after the license was originally issued.

Subsequent to the inspection, the NRC verified, based on an investigation by the NRC Office of Investigations (OI), that the licensee's letter, dated February 22, 1996, signed by Dr. Elamir, licensee President, transmitting the license application (NRC Form 313) dated February 2, 1996, was inaccurate in that it listed Dr. Moskowitz as the authorized user and Radiation Safety Officer without Dr. Moskowitz's consent or knowledge, and without Dr. Moskowitz ever having been affiliated or associated with the licensee. Further, Dr. Moskowitz did not ever perform the role of RSO at the licensee's facility. The NRC also learned that Dr. Ben-Haim, in his capacity as a consultant, had completed the license application for Dr. Elamir. As such, the licensee's application for a license to possess and use byproduct material was provided with information that was not complete and accurate in all material respects. These inaccurate statements in the licensee's application, signed by Dr. Elamir, and prepared by Dr. Ben-Haim, formed, in part, the basis for the issuance of the license to Newark Medical Associates on September 25, 1996. Further, the licensee continued to conduct NRC-licensed activities even though Dr. Ben-Haim, as the licensee consultant, knew that the licensee did not have an RSO.

III

Although the NRC staff's review of the results of the OI investigation is ongoing, the evidence that NRC has obtained indicates that Dr. Ben-Haim's actions in causing violations of NRC requirements were deliberate. The NRC

must be able to rely on the licensee and its employees and consultants/contractors to comply with NRC requirements. Condition No. 13 of the license required that each use of material by the licensee be done by, or under the supervision of Dr. Moskowitz as the authorized user named therein. NRC requires that the RSO named on the license implement a radiation safety program as required by 10 CFR 35.21. NRC requires that all communications between the licensee and the NRC be complete and accurate in all material respects, pursuant to 10 CFR 30.9. Pursuant to 10 CFR 30.10, deliberate misconduct on the part of a licensee or its employee or contractor is prohibited. The term ''deliberate misconduct'' includes an intentional act that the person knows would violate a Commission requirement. The evidence to date demonstrates that Dr. Ben-Haim, acting in violation of 10 CFR 30.10, deliberately caused the licensee to be in violation of NRC requirements by the licensee's conducting licensed activities without the authorized user or RSO named on the license application and on the NRC license.

Consequently, I lack the requisite reasonable assurance that licensed activities can be conducted in compliance with the Commission's requirements and that the health and safety of the public will be protected if Dr. Ben-Haim were permitted at this time to be involved in NRC-licensed activities. Therefore, the public health, safety and interest require that Dr. Ben-Haim be prohibited from any involvement in NRC-licensed activities pending further order. Furthermore, pursuant to 10 CFR 2.202, I find that the significance of Dr. Ben-Haim's conduct described above is such that the public health, safety and interest require that this Order be immediately effective.

IV

Accordingly, pursuant to sections 81, 161b, 161i, 161o, 182 and 186 of the Atomic Energy Act of 1954, as amended, and the Commission's regulations in 10 CFR 2.202 and 10 CFR 30.10, part 35, and 10 CFR 150.20, It is hereby ordered that, effective immediately,

1. Pending further Order, Dr. Ben-Haim is prohibited from engaging in NRC-licensed activities. This prohibition applies to Dr. Ben-Haim as an employee, contractor, consultant, or other agent of a license and includes, but is not limited to: (1) Any use of NRC-licensed materials; (2) supervising licensed activities, including (but not limited to) hiring of individuals engaged in licensed activities or directing or managing individuals engaged in licensed activities; (3) radiation safety activities including (but not limited to) functions of the Radiation Safety Officer; and (4) development of license applications, procedures, and policies to meet license requirements, providing training to meet license requirements, and providing professional services to meet license requirements. NRC-licensed activities are those activities that are conducted pursuant to a specific or general license issued by the NRC, including, but not limited to, those activities of Agreement State licensees conducted in areas of NRC jurisdiction pursuant to the authority granted by 10 CFR 150.20.

2. If Dr. Ben-Haim is currently involved in NRC-licensed activities other than at Newark Medical Associates, P.A., he must, as of the effective date of this Order: (1) Immediately cease such activities; (2) inform the NRC of the name, address and telephone number of the NRC-licensed entity or entities where the activities are being conducted; and (3) provide a copy of this order to all such NRC-licensed entities.

The Director, Office of Enforcement, may, in writing, relax or rescind any of the above conditions upon demonstration by the licensee of good cause.

IV

In accordance with 10 CFR 2.202, Dr. Ben-Haim must, and any other person adversely affected by this Order may, submit an answer to this Order and may request a hearing on this Order, within 20 days of the date of this Order. Where good cause is shown, consideration will be given to extending the time to request a hearing. A request for extension of time must be made in writing to the Director, Office of Enforcement, U.S. Nuclear Regulatory Commission Washington, D.C. 20555, and include a statement of good cause for the extension. Dr. Ben-Haim may consent to this Order. Unless Dr. Ben-Haim consents to this Order, Dr. Ben-Haim shall, in writing and under oath or affirmation, specifically admit or deny each allegation or charge made in this Order and shall set forth the matters of fact and law on which Dr. Ben-Haim or other person adversely affected relies and the reasons as to why the Order should not have been issued. Any answer or request for a hearing shall be submitted to the Secretary, U.S. Nuclear Regulatory Commission, Attn: Chief, Docketing and Service Section, Washington, DC 20555. Copies also shall be sent to the Director, Office of Enforcement, U.S. Nuclear Regulatory Commission, Washington, DC 20555, to the Assistant General Counsel for Hearings and Enforcement at the same address, to the Regional Administrator, NRC Region I, 475 Allendale Road, King of Prussia, Pennsylvania 19406, and to Dr. Ben-Haim if the answer or hearing request is by a person other than Dr. Ben-Haim. If a person other than Dr. Ben-Haim requests a hearing, that person shall set forth with particularity the manner in which his or her interest is adversely affected by this Order and shall address the criteria set forth in 10 CFR 2.714(d).

If a hearing is requested by Dr. Ben-Haim or a person whose interest is adversely affected, the Commission will issue an Order designating the time and place of any hearing. If a hearing is held, the issue to be considered at such hearing shall be whether this Order should be sustained.

Pursuant to 10 CFR 2.202(c)(2)(i), Dr. Ben-Haim may, in addition to demanding a hearing, at the time the answer is filed or sooner, move the presiding officer to set aside the immediate effectiveness of the Order on the ground that the Order, including the need for immediate effectiveness, is not based on adequate evidence but on mere suspicion, unfounded allegations, or error.

In the absence of any request for hearing, or written approval of an extension of time in which to request a hearing, the provisions specified in Section IV above shall be final 20 days from the date of this Order without further order or proceedings. If an extension of time for requesting a hearing has been approved, the provisions specified in Section IV shall be final when the extension expires if a hearing request has not been received. An answer or a request for hearing shall not stay the immediate effectiveness of this order.

Dated at Rockville, Maryland this 31st day of July 1997.

For the Nuclear Regulatory Commission.

Edward L. Jordan,

Deputy Executive Director for Regulatory Effectiveness.

[FR Doc. 97–21364 Filed 8–12–97; 8:45 am]

BILLING CODE 7590–01–P

NUCLEAR REGULATORY COMMISSION

[IA 97–059]

Susan A. Blacklock; Order Prohibiting Involvement in NRC-Licensed Activities (Effective Immediately)

I

Ms. Sue A. Blacklock (Ms. Blacklock) was formerly employed by PECO Energy Company at the Limerick Generating Station (PECO, Limerick, or Licensee) as the Primary Chemistry Manager. PECO holds Facility License Nos. NPF–39 and NPF–84 issued by the Nuclear Regulatory Commission (NRC or Commission) pursuant to 10 CFR part 50. These licenses authorize PECO to operate the Limerick Station, Units 1 and 2, in accordance with the conditions specified therein.

II

On February 7, 1996, while a Reactor Enclosure Cooling Water (RECW) radiation monitor was inoperable, the Licensee was required, in accordance with Technical Specification 3.3.7.1, ACTION 72, to obtain and analyze at least one grab sample from the RECW system at least once per 24 hours. On that date, the sample needed to be taken by 11:00 a.m. to meet that requirement. The sample was not taken until 12:15 p.m. on that date, approximately 1 hour and 15 minutes after the time it was due. However, the record of the grab sample RECW Surveillance Test (ST–5–026–570–1, ''Inop Reactor Enclosure Cooling Water Rad Mon Grab Sampling and Analysis''), signed by a chemistry technician and the chemist (as chemistry supervision), was inaccurate because (1) page one of attachment 1 of the test record indicated that the time of the sample was 11:00 a.m., and (2) the attached computer printout of the Gamma Spectrum Analysis (required by step 4.3.1 of the surveillance test) also indicated that the sample was taken at 11:00 a.m. The creation of this inaccurate record caused the Licensee to be in violation of 10 CFR 50.9, ''Completeness and accuracy of information.''

Afterwards, an investigation of this matter was conducted by PECO, and the NRC was informed of the findings. Subsequently, an investigation was conducted by the NRC Office of Investigations (OI), that determined, based upon the evidence developed during its investigation, and a review of evidence contained in the investigation report provided by PECO, that on February 7, 1996, the former PECO chemist and the PECO chemistry technician deliberately falsified RECW sample documentation, at the direction of Ms. Blacklock, the former PECO Primary Chemistry Manager.

Ms. Blacklock denied, both in her November 7, 1996, interview with OI, as well as during a June 3, 1997 predecisional enforcement conference with the NRC, that she had instructed the chemistry technician to rewrite the surveillance test, and also denied that she had instructed the chemist to change the sample time in the computer. Notwithstanding that denial, both the chemistry technician and the chemist stated in their interviews with OI, that it was Ms. Blacklock's idea to rewrite the surveillance test document and that she subsequently ordered that the sample time in the computer be changed. In addition, the original data sheet corroborates that the chemistry technician originally entered the proper sample time as 12:15 p.m. Therefore, contrary to Ms. Blacklock's denials, the NRC has concluded that Ms. Blacklock instructed the former PECO chemist and chemistry technician to falsify the RECW sample documentation.

III

Based on the above, the NRC has concluded that Ms. Blacklock engaged in deliberate misconduct by directing falsification of the time of the RECW grab sample. Ms. Blacklock's actions constitute a violation of 10 CFR 50.5(a)(1), which prohibits an individual from engaging in deliberate misconduct that causes or, but for detection, would have caused, a licensee to be in violation of any rule, regulation, or order, or any term, condition, or limitation of any license, issued by the Commission. In this case, Ms. Blacklock caused the Licensee to be in violation of 10 CFR 50.9, ''Completeness and accuracy of information.''

The NRC must be able to rely on the Licensee, its contractors, and the Licensee and contractor employees to comply with NRC requirements, including the requirement to maintain information that is complete and accurate in all material respects. Ms. Blacklock's action in directing falsification of records, and her collusion with others to hide that falsification, constitutes a deliberate violation of Commission regulations, and her doing so raises serious doubt as to whether she can be relied upon to comply with NRC requirements and to maintain complete and accurate information for NRC Licensees and Licensee contractors in the future, and raises doubt about her trustworthiness and reliability.

Consequently, I lack the requisite reasonable assurance that licensed activities can be conducted in compliance with the Commission's requirements and that the health and safety of the public would be protected if Ms. Blacklock were permitted at this time to be involved in NRC-licensed activities. Therefore, the public health, safety and interest require that Ms. Blacklock be prohibited from any involvement in NRC-licensed activities for a period of 5 years from the date of this Order, and if Ms. Blacklock is currently involved with another licensee in NRC-licensed activities, Ms. Blacklock must immediately cease such activities, and inform the NRC of the name, address and telephone number of the employer, and provide a copy of this Order to the employer. Additionally, Ms. Blacklock is required to notify the NRC of her first employment in NRC-licensed activities following the prohibition period. Furthermore, pursuant to 10 CFR 2.202, I find that the significance of Ms. Blacklock's conduct described above is such that the public health, safety and interest require that this Order be immediately effective.

IV

Accordingly, pursuant to sections 103, 161b, 161i, 161o, 182 and 186 of the Atomic Energy Act of 1954, as amended, and the Commission's regulations in 10 CFR 2.202, 10 CFR 50.5, and 10 CFR 150.20, It is hereby ordered, effective immediately, that:

1. Sue A. Blacklock is prohibited from engaging in activities licensed by the NRC for 5 years from the date of this Order. NRC-licensed activities are those activities that are conducted pursuant to a specific or general license issued by the NRC, including, but not limited to, those activities of Agreement State licensees conducted pursuant to the authority granted by 10 CFR 150.20.

2. After the 5-year period of prohibition has expired, Ms. Blacklock shall, within 20 days of her acceptance of the first employment offer involving NRC-licensed activities or her becoming involved in NRC-licensed activities, as defined in Paragraph IV.1 above, provide notice to the Director, Office of Enforcement, U. S. Nuclear Regulatory Commission, Washington, D.C. 20555, of the name, address, and telephone number of the employer or the entity where she is, or will be, involved in the NRC-licensed activities. In the notification, Ms. Blacklock shall include a statement of her commitment to compliance with regulatory requirements and the basis why the

Commission should have confidence that she will now comply with applicable NRC requirements.

The Director, OE, may, in writing, relax or rescind any of the above conditions upon demonstration by Ms. Blacklock of good cause.

V

In accordance with 10 CFR 2.202, Ms. Blacklock must, and any other person adversely affected by this Order may, submit an answer to this Order, and may request a hearing on this Order, within 20 days of the date of this Order. Where good cause is shown, consideration will be given to extending the time to request a hearing. A request for extension of time must be made in writing to the Director, Office of Enforcement, U.S. Nuclear Regulatory Commission Washington, D.C. 20555, and include a statement of good cause for the extension. The answer may consent to this Order. Unless the answer consents to this Order, the answer shall, in writing and under oath or affirmation, specifically admit or deny each allegation or charge made in this Order and shall set forth the matters of fact and law on which Ms. Blacklock or other person adversely affected relies and the reasons as to why the Order should not have been issued. Any answer or request for a hearing shall be submitted to the Secretary, U.S. Nuclear Regulatory Commission, Attn: Chief, Rulemakings and Adjudications Staff, Washington, DC 20555. Copies also shall be sent to the Director, Office of Enforcement, U.S. Nuclear Regulatory Commission, Washington, DC 20555, to the Assistant General Counsel for Hearings and Enforcement at the same address, to the Regional Administrator, NRC Region I, U.S. Nuclear Regulatory, 475 Allendale Road, King of Prussia, Pennsylvania 19406, and to Ms. Blacklock if the answer or hearing request is by a person other than Ms. Blacklock. If a person other than Ms. Blacklock requests a hearing, that person shall set forth with particularity the manner in which that person's interest is adversely affected by this Order and shall address the criteria set forth in 10 CFR 2.714(d).

If a hearing is requested by Ms. Blacklock or a person whose interest is adversely affected, the Commission will issue an Order designating the time and place of any hearing. If a hearing is held, the issue to be considered at such hearing shall be whether this Order should be sustained.

Pursuant to 10 CFR 2.202(c)(2)(i), Ms. Blacklock may, in addition to demanding a hearing, at the time the answer is filed or sooner, move the presiding officer to set aside the immediate effectiveness of the Order on the ground that the Order, including the need for immediate effectiveness, is not based on adequate evidence but on mere suspicion, unfounded allegations, or error.

In the absence of any request for hearing, or written approval of an extension of time in which to request a hearing, the provisions specified in Section IV above shall be final 20 days from the date of this Order without further order or proceedings. If an extension of time for requesting a hearing has been approved, the provisions specified in Section IV shall be final when the extension expires if a hearing request has not been received. An answer or a request for hearing shall not stay the immediate effectiveness of this order.

Dated at Rockville, Maryland, this 5th day of August 1997.

For the Nuclear Regulatory Commission.

Ashok C. Thadani,

Acting Deputy Executive Director for Regulatory Effectiveness.

[FR Doc. 97–21361 Filed 8–12–97; 8:45 am]

BILLING CODE 7590–01–P

NUCLEAR REGULATORY COMMISSION

[IA 97–064]

Order Prohibiting Involvement in NRC-Licensed Activities (Effective Immediately) Pending Further Order; Magdy Elamir, M.D., Newark, New Jersey

I

Magdy Elamir, M.D., (Dr. Elamir), is the Owner/President of Newark Medical Associates, P.A. (licensee), an NRC licensee who is the holder of Byproduct Nuclear Material License No. 29–30282–01 (license) issued by the Nuclear Regulatory Commission (NRC or Commission) pursuant to 10 CFR part 30. The license authorizes possession and use of any radiopharmaceutical identified in 10 CFR 35.200 for any imaging and localization procedure approved in 10 CFR 35.200. The license was originally issued on September 25, 1996, and is due to expire on September 30, 2001.

II

On January 29, 1997, the NRC conducted an inspection at the licensee's facility in Newark, New Jersey. During the inspection, several apparent violations of NRC requirements were identified. One of the violations involved the continued use of radioactive material by the licensee despite the fact that the only authorized user listed on the license (who was also listed as the Radiation Safety Officer (RSO)), had not ever performed any authorized user or RSO duties and had not ever been affiliated with the company. Specifically, Gerard W. Moskowitz, M.D. (Dr. Moskowitz), was listed on the application as the RSO and authorized user without his knowledge. Dr. Moskowitz did not become aware that he was listed on the application and the license until notified by the NRC on February 6, 1997, more than four months after the license was originally issued.

Subsequent to the inspection, the NRC verified, based on an investigation by the NRC Office of Investigations (OI), that the licensee's letter, dated February 22, 1996, signed by Dr. Elamir, transmitting the license application (NRC Form 313), dated February 2, 1996, was inaccurate in that it listed Dr. Moskowitz as the authorized user and Radiation Safety Officer without Dr. Moskowitz's consent or knowledge and without Dr. Moskowitz ever having been affiliated or associated with the licensee. Further, Dr. Moskowitz did not ever perform the role of RSO at the licensee's facility. As such, the licensee's application for a material license to possess and use byproduct material was provided with information that was not complete and accurate in all material respects. These inaccurate statements in the licensee's application, signed by Dr. Elamir, formed, in part, the basis for the issuance of the license to Newark Medical Associates on September 25, 1996. Further, the licensee continued to conduct NRC-licensed activities even though Dr. Elamir knew that the licensee did not have an RSO.

III

Although the NRC staff's review of the results of the OI investigation is ongoing, the evidence that NRC has obtained indicates that Dr. Elamir's actions in causing violations of NRC requirements were deliberate. The NRC must be able to rely on the licensee and its employees to comply with NRC requirements. Condition No. 13 of the license required that each use of licensed material be done by, or under the supervision of Dr. Moskowitz as the authorized user named therein. NRC requires that the RSO named on the license implement a radiation safety program pursuant to 10 CFR 35.21. NRC also requires that all communications between the licensee and the NRC be complete and accurate in all material respects, pursuant to 10 CFR 30.9.

Pursuant to 10 CFR 30.10, deliberate misconduct on the part of a licensee or its employee or contractor is prohibited. The term ''deliberate misconduct'' includes an intentional act that the person knows would violate a Commission requirement. The evidence to date demonstrates that Dr. Elamir, acting in violation of 10 CFR 30.10, deliberately violated NRC requirements.

Consequently, I lack the requisite reasonable assurance that licensed activities can be conducted in compliance with the Commission's requirements and that the health and safety of the public will be protected if Dr. Elamir were permitted at this time to be involved in NRC-licensed activities. Therefore, the public health, safety and interest require that Dr. Elamir be prohibited from any involvement in NRC-licensed activities pending further order. Furthermore, pursuant to 10 CFR 2.202, I find that the significance of Dr. Elamir's conduct described above is such that the public health, safety and interest require that this Order be immediately effective.

IV

Accordingly, pursuant to sections 81, 161b, 161i, 161o, 182 and 186 of the Atomic Energy Act of 1954, as amended, and the Commission's regulations in 10 CFR 2.202 and 10 CFR 30.10, Part 35, and 10 CFR 150.20, *It is hereby ordered that, effective immediately:*

1. Pending further order, Dr. Elamir is prohibited from engaging in NRC-licensed activities. This prohibition applies to Dr. Elamir as an employee, contractor, consultant, or other agent of a license and includes, but is not limited to: (1) Any use of NRC-licensed materials; (2) supervising licensed activities, including (but not limited to) hiring of individuals engaged in licensed activities or directing or managing individuals engaged in licensed activities; (3) radiation safety activities including (but not limited to) functions of the Radiation Safety Officer; and (4) development of license applications, procedures, and policies to meet license requirements, providing training to meet license requirements, and providing professional services to meet license requirements. NRC-licensed activities are those activities that are conducted pursuant to a specific or general license issued by the NRC, including, but not limited to, those activities of Agreement State licensees conducted in areas of NRC jurisdiction pursuant to the authority granted by 10 CFR 150.20.

2. If Dr. Elamir is currently involved in NRC-licensed activities other than at Newark Medical Associates, P.A., he must, as of the effective date of this Order: (1) Immediately cease such activities; (2) inform the NRC of the name, address and telephone number of the NRC-licensed entity or entities where the activities are being conducted; and (3) provide a copy of this order to all such NRC-licensed entities.

The Director, Office of Enforcement, may, in writing, relax or rescind any of the above conditions upon demonstration by the licensee of good cause.

V

In accordance with 10 CFR 2.202, Dr. Elamir must, and any other person adversely affected by this Order may, submit an answer to this Order and may request a hearing on this Order, within 20 days of the date of this Order. Where good cause is shown, consideration will be given to extending the time to request a hearing. A request for extension of time must be made in writing to the Director, Office of Enforcement, U.S. Nuclear Regulatory Commission Washington, DC 20555, and include a statement of good cause for the extension. The answer may consent to this Order. Unless the answer consents to this Order, the answer shall, in writing and under oath or affirmation, specifically admit or deny each allegation or charge made in this Order and shall set forth the matters of fact and law on which Dr. Elamir or other person adversely affected relies and the reasons as to why the Order should not have been issued. Any answer or request for a hearing shall be submitted to the Secretary, U.S. Nuclear Regulatory Commission, Attn: Chief, Docketing and Service Section, Washington, DC 20555. Copies also shall be sent to the Director, Office of Enforcement, U.S. Nuclear Regulatory Commission, Washington, DC 20555, to the Assistant General Counsel for Hearings and Enforcement at the same address, to the Regional Administrator, NRC Region I, 475 Allendale Road, King of Prussia, Pennsylvania 19406, and to Dr. Elamir if the answer or hearing request is by a person other than Dr. Elamir. If a person other than Dr. Elamir requests a hearing, that person shall set forth with particularity the manner in which his or her interest is adversely affected by this Order and shall address the criteria set forth in 10 CFR 2.714(d).

If a hearing is requested by Dr. Elamir or a person whose interest is adversely affected, the Commission will issue an Order designating the time and place of any hearing. If a hearing is held, the issue to be considered at such hearing shall be whether this Order should be sustained.

Pursuant to 10 CFR 2.202(c)(2)(i), Dr. Elamir may, in addition to demanding a hearing, at the time the answer is filed or sooner, move the presiding officer to set aside the immediate effectiveness of the Order on the ground that the Order, including the need for immediate effectiveness, is not based on adequate evidence but on mere suspicion, unfounded allegations, or error.

In the absence of any request for a hearing, or written approval of an extension of time in which to request a hearing, the provisions specified in Section IV above shall be final 20 days from the date of this Order without further order or proceedings. If an extension of time for requesting a hearing has been approved, the provisions specified in Section IV shall be final when the extension expires if a hearing request has not been received. An answer or a request for a hearing shall not stay the immediate effectiveness of this order.

For the Nuclear Regulatory Commission.

Edward L. Jordan,

Deputy Executive Director for Regulatory Effectiveness.

[FR Doc. 97–21363 Filed 8–12–97; 8:45 am]

BILLING CODE 7590–01–P

NUCLEAR REGULATORY COMMISSION

[IA 97–060]

Steven F. Nevin; Order Prohibiting Involvement in NRC-Licensed Activities (Effective Immediately)

I

Mr. Steven F. Nevin (Mr. Nevin) was formerly employed by PECO Energy Company at the Limerick Generating Station (PECO, Limerick, or Licensee) as a chemist. PECO holds Facility License No. NPF–39 and NPF–84 issued by the Nuclear Regulatory Commission (NRC or Commission) pursuant to 10 CFR part 50. These licenses authorize PECO to operate the Limerick Station, Units 1 and 2, in accordance with the conditions specified therein.

II

On February 7, 1996, while a Reactor Enclosure Cooling Water (RECW) radiation monitor was inoperable, the Licensee was required, in accordance with Technical Specification 3.3.7.1, ACTION 72, to obtain and analyze at least one grab sample from the RECW system at least once per 24 hours. On that date, the sample needed to be taken by 11:00 a.m. to meet that requirement.

The sample was not taken until 12:15 p.m. on that date, approximately 1 hour and 15 minutes after the time it was due. However, the record of the grab sample RECW Surveillance Test (ST–5–026–570–1, ''Inop Reactor Enclosure Cooling Water Rad Mon Grab Sampling and Analysis''), signed by a chemistry technician and Mr. Nevin, the chemist (as chemistry supervision), was inaccurate because (1) page one of attachment 1 of the test record indicated that the time of the sample was 11:00 a.m., and (2) the attached computer printout of the Gamma Spectrum Analysis, as changed by Mr. Nevin, also indicated that the sample was taken at 11:00 a.m.. The creation of this inaccurate record caused the Licensee to be in violation of 10 CFR 50.9, ''Completeness and accuracy of information.''

Afterwards, an investigation of this matter was conducted by PECO, and the NRC was informed of the findings. Subsequently, an investigation was conducted by the NRC Office of Investigations (OI), that determined, based upon the evidence developed during its investigation, and a review of evidence contained in the investigation report provided by PECO, that on February 7, 1996, Mr. Nevin, and the PECO chemistry technician, deliberately falsified RECW sample documentation, at the direction of Ms. Blacklock, the former PECO Primary Chemistry Manager.

Mr. Nevin was interviewed by OI on July 24 and December 10, 1996. During the interviews, Mr. Nevin indicated initially that he corrected the sample time recorded in the Gamma Spectrum Analysis from 12:15 p.m. to 11:00 a.m. because he was told that another sample (taken earlier) had been found. Upon further questioning, Mr. Nevin admitted to the initial fabrication and stated that he and the chemistry technician falsified the surveillance test documents to record the sample time of 11:00 a.m. at the direction of the former Primary Chemistry Manager.

III

Based on the above, the NRC has concluded that Mr. Nevin engaged in deliberate misconduct. Mr. Nevin's actions constitute a violation of 10 CFR 50.5(a)(1), which prohibits an individual from engaging in deliberate misconduct that causes or, but for detection, would have caused, a licensee to be in violation of any rule, regulation, or order, or any term, condition, or limitation of any license, issued by the Commission. In this case, Mr. Nevin caused the Licensee to be in violation of 10 CFR 50.9, ''Completeness and accuracy of information.''

The NRC must be able to rely on the Licensee, its contractors, and the Licensee and contractor employees to comply with NRC requirements, including the requirement to maintain information that is complete and accurate in all material respects. Mr. Nevin's action in falsifying records, and his collusion with others to hide that falsification, constitute deliberate violations of Commission regulations, and by doing so, raises serious doubt as to whether he can be relied upon to comply with NRC requirements and to provide complete and accurate information to NRC Licensees and their contractors in the future, and raises doubt about his trustworthiness and reliability.

Consequently, I lack the requisite reasonable assurance that licensed activities can be conducted in compliance with the Commission's requirements and that the health and safety of the public would be protected if Mr. Nevin were permitted at this time to be involved in NRC-licensed activities.

Therefore, the public health, safety and interest require that Mr. Nevin be prohibited from any involvement in NRC-licensed activities for a period of 3 years from the date of this Order, and if Mr. Nevin is currently involved with another licensee in NRC-licensed activities, Mr. Nevin must immediately cease such activities, and inform the NRC of the name, address and telephone number of the employer, and provide a copy of this Order to the employer. Additionally, Mr. Nevin is required to notify the NRC of his first employment in NRC-licensed activities following the prohibition period. Furthermore, pursuant to 10 CFR 2.202, I find that the significance of Mr. Nevin's conduct described above is such that the public health, safety and interest require that this Order be immediately effective.

IV

Accordingly, pursuant to sections 103, 161b, 161i, 161o, 182 and 186 of the Atomic Energy Act of 1954, as amended, and the Commission's regulations in 10 CFR 2.202, 10 CFR 50.5, and 10 CFR 150.20, *It is hereby ordered, effective immediately, that:*

1. Steven F. Nevin is prohibited from engaging in activities licensed by the NRC for 3 years from the date of this Order. NRC-licensed activities are those activities that are conducted pursuant to a specific or general license issued by the NRC, including, but not limited to, those activities of Agreement State licensees conducted pursuant to the authority granted by 10 CFR 150.20.

2. After the 3-year period of prohibition has expired, Mr. Nevin shall, within 20 days of his acceptance of the first employment offer involving NRC-licensed activities or his becoming involved in NRC-licensed activities, as defined in Paragraph IV.1 above, provide notice to the Director, Office of Enforcement, U. S. Nuclear Regulatory Commission, Washington, D.C. 20555, of the name, address, and telephone number of the employer or the entity where he is, or will be, involved in the NRC-licensed activities. In the notification, Mr. Nevin shall include a statement of his commitment to compliance with regulatory requirements and the basis why the Commission should have confidence that he will now comply with applicable NRC requirements.

The Director, OE, may, in writing, relax or rescind any of the above conditions upon demonstration by Mr. Nevin of good cause.

V

In accordance with 10 CFR 2.202, Mr. Nevin must, and any other person adversely affected by this Order may, submit an answer to this Order, and may request a hearing on this Order, within 20 days of the date of this Order. Where good cause is shown, consideration will be given to extending the time to request a hearing. A request for extension of time must be made in writing to the Director, Office of Enforcement, U.S. Nuclear Regulatory Commission Washington, D.C. 20555, and include a statement of good cause for the extension. The answer may consent to this Order. Unless the answer consents to this Order, the answer shall, in writing and under oath or affirmation, specifically admit or deny each allegation or charge made in this Order and shall set forth the matters of fact and law on which Mr. Nevin or other person adversely affected relies and the reasons as to why the Order should not have been issued. Any answer or request for a hearing shall be submitted to the Secretary, U.S. Nuclear Regulatory Commission, Attn: Chief, Rulemakings and Adjudications Staff, Washington, DC 20555. Copies also shall be sent to the Director, Office of Enforcement, U.S. Nuclear Regulatory Commission, Washington, DC 20555, to the Assistant General Counsel for Hearings and Enforcement at the same address, to the Regional Administrator, NRC Region I, U.S. Nuclear Regulatory, 475 Allendale Road, King of Prussia, Pennsylvania 19406, and to Mr. Nevin if the answer or hearing request is by a

person other than Mr. Nevin. If a person other than Mr. Nevin requests a hearing, that person shall set forth with particularity the manner in which that person's interest is adversely affected by this Order and shall address the criteria set forth in 10 CFR 2.714(d).

If a hearing is requested by Mr. Nevin or a person whose interest is adversely affected, the Commission will issue an Order designating the time and place of any hearing. If a hearing is held, the issue to be considered at such hearing shall be whether this Order should be sustained.

Pursuant to 10 CFR 2.202(c)(2)(i), Mr. Nevin may, in addition to demanding a hearing, at the time the answer is filed or sooner, move the presiding officer to set aside the immediate effectiveness of the Order on the ground that the Order, including the need for immediate effectiveness, is not based on adequate evidence but on mere suspicion, unfounded allegations, or error.

In the absence of any request for hearing, or written approval of an extension of time in which to request a hearing, the provisions specified in Section IV above shall be final 20 days from the date of this Order without further order or proceedings. If an extension of time for requesting a hearing has been approved, the provisions specified in Section IV shall be final when the extension expires if a hearing request has not been received. An answer or a request for hearing shall not stay the immediate effectiveness of this order.

Dated at Rockville, Maryland, this 5th day of August 1997.

For the Nuclear Regulatory Commission.

Ashok C. Thadani,

Acting Deputy Executive Director for Regulatory Effectiveness.

[FR Doc. 97–21362 Filed 8–12–97; 8:45 am]

BILLING CODE 7590–01–P

NUCLEAR REGULATORY COMMISSION

[Docket Nos. 50–335 and 50–389]

Florida Power and Light Company (St. Lucie Plant, Unit Nos. 1 and 2); Environmental Assessment and Finding of No Significant Impact

The U.S. Nuclear Regulatory Commission (the Commission) is considering issuance of an exemption from certain requirements of its regulations for Facility Operating License Nos. DPR–67 and NPF–16, issued to Florida Power and Light Company, et. al. (the licensee), for operation of the St. Lucie Plant, Unit Nos. 1 and 2, located in St. Lucie County, Florida.

Environmental Assessment

Identification of Proposed Action

The proposed action would exempt the licensee from the requirements of 10 CFR 70.24, which requires a monitoring system that will energize clear audible alarms if accidental criticality occurs in each area in which special nuclear material (SNM) is handled, used, or stored. The proposed action would also exempt the licensee from the requirements to maintain emergency procedures for each area in which this licensed SNM is handled, used, or stored to ensure that all personnel withdraw to an area of safety upon the sounding of the alarm, to familiarize personnel with the evacuation plan, and to designate responsible individuals for determining the cause of the alarm, and to place radiation survey instruments in accessible locations for use in such an emergency.

The proposed action is in accordance with the licensee's application for exemption dated February 19, 1997, and supplemented July 10, 1997.

The Need for the Proposed Action

The purpose of 10 CFR 70.24 is to ensure that if a criticality were to occur during the handling of SNM, personnel would be alerted to that fact and would take appropriate action. At a commercial nuclear power plant the inadvertent criticality with which 10 CFR 70.24 is concerned could occur during fuel handling operations. The SNM that could be assembled into a critical mass at a commercial nuclear power plant is in the form of nuclear fuel; the quantity of other forms of SNM that is stored on site is small enough to preclude achieving a critical mass. Because the fuel is not enriched beyond 5.0 weight percent Uranium-235 and because commercial nuclear plant licensees have procedures and features designed to prevent inadvertent criticality, the staff has determined that it is unlikely that an inadvertent criticality could occur due to the handling of SNM at a commercial power reactor. The requirements of 10 CFR 70.24, therefore, are not necessary to ensure the safety of personnel during the handling of SNM at commercial power reactors.

Environmental Impacts of the Proposed Action

The Commission has completed its evaluation of the proposed action and concludes that there is no significant environmental impact if the exemption is granted. Inadvertent or accidental criticality will be precluded through compliance with the St. Lucie, Units 1 and 2 Technical Specifications (TS), the design of the fuel storage racks providing geometric spacing of fuel assemblies in their storage locations, and administrative controls imposed on fuel handling procedures. TS requirements specify reactivity limits for the fuel storage racks and minimum spacing between the fuel assemblies in the storage racks.

Appendix A of 10 CFR part 50, ''General Design Criteria for Nuclear Power Plants,'' Criterion 62, requires the criticality in the fuel storage and handling system shall be prevented by physical systems or processes, preferably by use of geometrically-safe configurations. This is met at St. Lucie, Units 1 and 2, as identified in the TS and the Updated Final Safety Analysis Report (UFSAR). St. Lucie TS Section 5.6.1.c (Unit 1) and 5.6.1.b (Unit 2), state that the new fuel storage racks are designed for dry storage of unirradiated fuel assemblies having a U–235 enrichment less than or equal to 4.5 weight percent, while maintaining a k-effective of less than or equal to 0.98 under the most reactive condition. UFSAR Section 9.1.1, New Fuel Storage, for both Units 1 and 2 specify that the fuel racks are designed to provide sufficient spacing between fuel assemblies to maintain a subcritical (k-effective less than or equal to 0.98) array assuming the most reactive condition, and under all design loadings including the safe shutdown earthquake. The UFSAR also specifies that the new fuel racks are designed to preclude the insertion of a new fuel assembly between cavities.

The proposed exemption would not result in any significant radiological impacts. The proposed exemption would not affect radiological plant effluent nor cause any significant occupational exposures since the TS design controls (including geometric spacing of fuel assembly storage spaces) and administrative controls preclude inadvertent criticality. The amount of radioactive waste would not be changed by the proposed exemption.

The proposed exemption does not result in any significant non-radiological environmental impacts. The proposed exemption involves features located entirely within the restricted area as defined in 10 CFR Part 20. It does not affect non-radiological plant effluents and has no other environmental impact. Accordingly, the Commission concludes that there are no significant non-radiological

environmental impacts associated with the proposed action.

Alternatives to the Proposed Action

Since the Commission has concluded that there is no measurable environmental impact associated with the proposed action, any alternatives with equal or greater environmental impact need not be evaluated. As an alternative to the proposed exemption, the staff considered denial of the requested exemption. Denial of the request would result in no change in current environmental impacts. The environmental impacts of the proposed action and the alternative action are similar.

Alternative Use of Resources

This action does not involve the use of any resources not previously considered in the ''Final Environmental Statement Related to the St. Lucie Plant Unit No. 1,'' dated June 1973, and ''Final Environmental Statement Related to the Construction of St. Lucie Plant Unit No. 2,'' dated May 1974.

Agencies and Persons Consulted

In accordance with its stated policy, on July 16, 1997, the Commission staff consulted with Mr. William Passetti, Acting Chief of the Bureau of Radiation Control, Florida Department of Health and Rehabilitative Services, regarding the environmental impact of the proposed action. The State official had no comments.

Finding of No Significant Impact

Based upon the environmental assessment, the Commission concludes that the proposed action will not have a significant effect on the quality of the human environment. Accordingly, the Commission has determined not to prepare an environmental impact statement for the proposed action.

For further details with respect to the proposed action, see the licensee's letter dated February 19, 1997, and supplement dated July 10, 1997, which is available for public inspection at the Commission's Public Document Room, which is located at The Gelman Building, 2120 L Street, NW., Washington, DC, and at the local public document room located at the Indian River College Library, 3209 Virginia Avenue, Fort Pierce, Florida 34981–5599.

Dated at Rockville, Maryland, this 6th day of August 1997.

For the Nuclear Regulatory Commission.

L.A. Wiens,

Senior Project Manager, Project Directorate II–3, Division of Reactor Projects—I/II, Office of Nuclear Reactor Regulation.

[FR Doc. 97–21359 Filed 8–12–97; 8:45 am]

BILLING CODE 7590–01–P

NUCLEAR REGULATORY COMMISSION

[Docket Nos. 50–266 and 50–301]

Wisconsin Electric Power Company (Point Beach Nuclear Plant, Units 1 and 2); Environmental Assessment and Finding of No Significant Impact

The U.S. Nuclear Regulatory Commission (the Commission) is considering issuance of amendments to Facility Operating Licenses Nos. DPR–24 and DPR–27, issued to Wisconsin Electric Power Company, (the licensee), for operation of the Point Beach Nuclear Plant, Units 1 and 2, located in Manitowoc County, Wisconsin.

Environmental Assessment

Identification of the Proposed Action

By letter dated January 24, 1997, as supplemented by letter dated May 15, 1997, the licensee proposed to change the technical specifications (TSs) to allow an increase in fuel enrichment (Uranium 235, U–235) to 5.0 weight percent and to require the use of integral fuel burnable absorbers for assemblies with enrichments greater than 4.6 weight percent U–235. Point Beach TSs currently limit fuel in the spent fuel pool and new fuel storage racks to a maximum enrichment of 44.8 grams of U–235 per axial centimeter (approximately 4.0 weight percent of a standard fuel assembly and 46.8 grams of U–235 per axial centimeter (approximately 4.75 weight percent) of an Optimized Fuel Assembly (OFA).

The Need for the Proposed Action

The licensee intends, in the future, to use the more highly enriched fuel to support longer fuel cycles. Currently, TS 15.5.4 limits the enrichment of fuel assemblies stored in the spent fuel pool and new fuel storage racks. Before the licensee extends plant operating cycles, it plans on receiving shipments of 5.0 weight percent fuel. Thus, the change to the TSs was requested.

Environmental Impacts of the Proposed Action

The Commission has completed its evaluation of the proposed revision to the TSs and concludes that storage and use of fuel enriched with U–235 up to 5.0 weight percent at Point Beach Nuclear Plant, Units 1 and 2 is acceptable. The safety considerations associated with higher enrichments were evaluated by the NRC staff and the staff concluded that such changes would not adversely affect plant safety.

The environmental impacts of transportation resulting from the use of higher enrichment are discussed in the staff assessment entitled ''NRC Assessment of the Environmental Effects of Transportation Resulting from Extended Fuel Enrichment and Irradiation,'' dated July 7, 1988. This assessment was published in the **Federal Register** on August 11, 1988 (53 FR 30355), as corrected on August 24, 1988 (53 FR 32322) in connection with an Environmental Assessment and Finding of No Significant Impact related to the Shearon Harris Nuclear Power Plant, Unit 1. As indicated therein, the environmental cost contribution of an increase in fuel enrichment of up to 5 weight percent U–235 and irradiation limits of up to 60 gigawatt days per metric ton (GWD/MT) are either unchanged, or may in fact be reduced from those summarized in Table S–4 as set forth in 10 CFR 51.52(c). These findings are applicable to the proposed amendments for Point Beach Nuclear Plant, Units 1 and 2. Accordingly, the Commission concludes that this proposed action would result in no significant radiological environmental impact.

The change will not increase the probability or consequences of accidents, no changes are being made in the types of any effluents that may be released offsite, no changes are being made to the authorized power level, and there is no significant increase in the allowable individual or cumulative occupational radiation exposure. Accordingly, the Commission concludes that there are no significant radiological environmental impacts associated with the proposed action.

With regard to potential nonradiological impacts, the proposed action does involve features located entirely within the restricted area as defined in 10 CFR part 20. It does not affect nonradiological plant effluents and has no other environmental impact. Accordingly, the Commission concludes that there are no significant nonradiological environmental impacts associated with the proposed action.

Alternatives to the Proposed Action

Since the Commission has concluded there is no measurable environmental impact associated with the proposed action, any alternatives with equal or greater environmental impact need not be evaluated. As an alternative to the

proposed action, the staff considered denial of the proposed action. Denial of the application would result in no change in current environmental impacts. The environmental impacts of the proposed action and the alternative action are similar.

Alternative Use of Resources

This action does not involve the use of any resources not previously considered in the Final Environmental Statement for the Point Beach Nuclear Plant, Units 1 and 2.

Agencies and Persons Consulted

In accordance with its stated policy, on July 29, 1997, the staff consulted with the Wisconsin State official, Ms. Sarah Jenkins of the Wisconsin Public Service Commission, regarding the environmental impact of the proposed action. The State official had no comments.

Finding of No Significant Impact

Based upon the environmental assessment, the Commission concludes that the proposed action will not have a significant effect on the quality of the human environment. Accordingly, the Commission has determined not to prepare an environmental impact statement for the proposed action.

For further details with respect to the proposed action, see the licensee's letter dated January 24, 1997, as supplemented by letter dated May 15, 1997, which are available for public inspection at the Commission's Public Document Room, The Gelman Building, 2120 L Street, NW., Washington, DC, and at the local public document room located at The Lester Public Library, 1001 Adams Street, Two Rivers, WI 54241.

Dated at Rockville, Maryland, this 7th day of August 1997.

For the Nuclear Regulatory Commission.

Linda L. Gundrum,

Project Manager, Project Directorate III–1, Division of Reactor Projects—III/IV, Office of Nuclear Reactor Regulation.

[FR Doc. 97–21360 Filed 8–12–97; 8:45 am]

BILLING CODE 7590–01–P

NUCLEAR REGULATORY COMMISSION

Biweekly Notice

Applications and Amendments to Facility Operating LicensesInvolving No Significant Hazards Considerations

I. Background

Pursuant to Public Law 97-415, the U.S. Nuclear Regulatory Commission (the Commission or NRC staff) is publishing this regular biweekly notice. Public Law 97-415 revised section 189 of the Atomic Energy Act of 1954, as amended (the Act), to require the Commission to publish notice of any amendments issued, or proposed to be issued, under a new provision of section 189 of the Act. This provision grants the Commission the authority to issue and make immediately effective any amendment to an operating license upon a determination by the Commission that such amendment involves no significant hazards consideration, notwithstanding the pendency before the Commission of a request for a hearing from any person.

This biweekly notice includes all notices of amendments issued, or proposed to be issued from July 19, 1997, through August 1, 1997. The last biweekly notice was published on July 30, 1997, (62 FR 40843).

Notice Of Consideration Of Issuance Of Amendments To Facility Operating Licenses, Proposed No Significant Hazards Consideration Determination, And Opportunity For A Hearing

The Commission has made a proposed determination that the following amendment requests involve no significant hazards consideration. Under the Commission's regulations in 10 CFR 50.92, this means that operation of the facility in accordance with the proposed amendment would not (1) involve a significant increase in the probability or consequences of an accident previously evaluated; or (2) create the possibility of a new or different kind of accident from any accident previously evaluated; or (3) involve a significant reduction in a margin of safety. The basis for this proposed determination for each amendment request is shown below.

The Commission is seeking public comments on this proposed determination. Any comments received within 30 days after the date of publication of this notice will be considered in making any final determination.

Normally, the Commission will not issue the amendment until the expiration of the 30-day notice period. However, should circumstances change during the notice period such that failure to act in a timely way would result, for example, in derating or shutdown of the facility, the Commission may issue the license amendment before the expiration of the 30-day notice period, provided that its final determination is that the amendment involves no significant hazards consideration. The final determination will consider all public and State comments received before action is taken. Should the Commission take this action, it will publish in the **Federal Register** a notice of issuance and provide for opportunity for a hearing after issuance. The Commission expects that the need to take this action will occur very infrequently.

Written comments may be submitted by mail to the Chief, Rules Review and Directives Branch, Division of Freedom of Information and Publications Services, Office of Administration, U.S. Nuclear Regulatory Commission, Washington, DC 20555-0001, and should cite the publication date and page number of this **Federal Register** notice. Written comments may also be delivered to Room 6D22, Two White Flint North, 11545 Rockville Pike, Rockville, Maryland from 7:30 a.m. to 4:15 p.m. Federal workdays. Copies of written comments received may be examined at the NRC Public Document Room, the Gelman Building, 2120 L Street, NW., Washington, DC. The filing of requests for a hearing and petitions for leave to intervene is discussed below.

By September 12, 1997, the licensee may file a request for a hearing with respect to issuance of the amendment to the subject facility operating license and any person whose interest may be affected by this proceeding and who wishes to participate as a party in the proceeding must file a written request for a hearing and a petition for leave to intervene. Requests for a hearing and a petition for leave to intervene shall be filed in accordance with the Commission's ''Rules of Practice for Domestic Licensing Proceedings'' in 10 CFR Part 2. Interested persons should consult a current copy of 10 CFR 2.714 which is available at the Commission's Public Document Room, the Gelman Building, 2120 L Street, NW., Washington, DC and at the local public document room for the particular facility involved. If a request for a hearing or petition for leave to intervene is filed by the above date, the Commission or an Atomic Safety and Licensing Board, designated by the Commission or by the Chairman of the Atomic Safety and Licensing Board Panel, will rule on the request and/or petition; and the Secretary or the designated Atomic Safety and Licensing Board will issue a notice of a hearing or an appropriate order.

As required by 10 CFR 2.714, a petition for leave to intervene shall set forth with particularity the interest of the petitioner in the proceeding, and how that interest may be affected by the results of the proceeding. The petition should specifically explain the reasons

why intervention should be permitted with particular reference to the following factors: (1) the nature of the petitioner's right under the Act to be made a party to the proceeding; (2) the nature and extent of the petitioner's property, financial, or other interest in the proceeding; and (3) the possible effect of any order which may be entered in the proceeding on the petitioner's interest. The petition should also identify the specific aspect(s) of the subject matter of the proceeding as to which petitioner wishes to intervene. Any person who has filed a petition for leave to intervene or who has been admitted as a party may amend the petition without requesting leave of the Board up to 15 days prior to the first prehearing conference scheduled in the proceeding, but such an amended petition must satisfy the specificity requirements described above.

Not later than 15 days prior to the first prehearing conference scheduled in the proceeding, a petitioner shall file a supplement to the petition to intervene which must include a list of the contentions which are sought to be litigated in the matter. Each contention must consist of a specific statement of the issue of law or fact to be raised or controverted. In addition, the petitioner shall provide a brief explanation of the bases of the contention and a concise statement of the alleged facts or expert opinion which support the contention and on which the petitioner intends to rely in proving the contention at the hearing. The petitioner must also provide references to those specific sources and documents of which the petitioner is aware and on which the petitioner intends to rely to establish those facts or expert opinion. Petitioner must provide sufficient information to show that a genuine dispute exists with the applicant on a material issue of law or fact. Contentions shall be limited to matters within the scope of the amendment under consideration. The contention must be one which, if proven, would entitle the petitioner to relief. A petitioner who fails to file such a supplement which satisfies these requirements with respect to at least one contention will not be permitted to participate as a party.

Those permitted to intervene become parties to the proceeding, subject to any limitations in the order granting leave to intervene, and have the opportunity to participate fully in the conduct of the hearing, including the opportunity to present evidence and cross-examine witnesses.

If a hearing is requested, the Commission will make a final determination on the issue of no significant hazards consideration. The final determination will serve to decide when the hearing is held.

If the final determination is that the amendment request involves no significant hazards consideration, the Commission may issue the amendment and make it immediately effective, notwithstanding the request for a hearing. Any hearing held would take place after issuance of the amendment.

If the final determination is that the amendment request involves a significant hazards consideration, any hearing held would take place before the issuance of any amendment.

A request for a hearing or a petition for leave to intervene must be filed with the Secretary of the Commission, U.S. Nuclear Regulatory Commission, Washington, DC 20555-0001, Attention: Docketing and Services Branch, or may be delivered to the Commission's Public Document Room, the Gelman Building, 2120 L Street, NW., Washington DC, by the above date. A copy of the petition should also be sent to the Office of the General Counsel, U.S. Nuclear Regulatory Commission, Washington, DC 20555-0001, and to the attorney for the licensee.

Nontimely filings of petitions for leave to intervene, amended petitions, supplemental petitions and/or requests for a hearing will not be entertained absent a determination by the Commission, the presiding officer or the Atomic Safety and Licensing Board that the petition and/or request should be granted based upon a balancing of factors specified in 10 CFR 2.714(a)(1)(i)-(v) and 2.714(d).

For further details with respect to this action, see the application for amendment which is available for public inspection at the Commission's Public Document Room, the Gelman Building, 2120 L Street, NW., Washington, DC, and at the local public document room for the particular facility involved.

Carolina Power & Light Company, et al., Docket Nos. 50-325 and 50-324, Brunswick Steam Electric Plant, Units 1 and 2, Brunswick County, North Carolina

Date of amendments request: July 8, 1997

Description of amendments request: The proposed amendments remove the suppression chamber water volume band from Technical Specification (TS) 3.6.2.1.a.1 while retaining the equivalent water level band. The values for the suppression chamber water volume corresponding to the low and high suppression chamber water levels will be retained in the Bases section of the TS and will be revised by the proposed amendments to account for the displacement of water due to the planned installation of larger emergency core cooling system suction strainers. The revised relationship between the high and low suppression chamber water levels and suppression chamber water volume will also be described in the Updated Final Safety Analysis Report.

Basis for proposed no significant hazards consideration determination: As required by 10 CFR 50.91(a), the licensee has provided its analysis of the issue of no significant hazards consideration, which is presented below: 1. The proposed amendments do not involve a significant increase in the probability or consequences of an accident previously evaluated.

The proposed change revises the values of the minimum and maximum suppression chamber pool water volume limits. The water inventory of the suppression chamber pool is not a precursor of an accident and, therefore, cannot increase the probability of an accident previously evaluated. The pressure suppression chamber water pool mitigates the consequences of loss-of-coolant accidents (LOCAs) transients [sic], and other events by providing a heat sink for reactor primary system energy releases. The proposed minimum and maximum pool water volume values will be consistent with the current suppression chamber pool water level limits. No changes to setpoints will be made as a result of the proposed change. The impact of the proposed change to the minimum and maximum suppression chamber pool volume limits on the suppression chamber pool temperatures and pressures following a design basis LOCA, an Safety/Relief Valve (SRV) blowdown event, an Anticipated Transient Without Scram (ATWS) event, an Appendix R fire event, and a station blackout event has been evaluated and does not cause accident parameters to exceed acceptable values. In addition, the impact the proposed change has on the time to reach cold shutdown when using the alternate Residual Heat Removal (RHR) shutdown cooling function is negligible. The potential impact the proposed change to the suppression chamber pool water volume limits has on SRV line loads, SRV discharge line reflood height, wetwell pressurization, suppression chamber pool swell loads, vent thrust loads, and condensation oscillation and chugging loads was also reviewed. The change to the suppression chamber pool water volume limits has no significant adverse impact on any of these parameters. As delineated above, the capability of the suppression chamber water pool to perform its mitigative functions is not affected by the proposed change. Therefore, the proposed change does not involve a significant increase in the consequences of an accident previously evaluated.

2. The proposed amendments would not create the possibility of a new or different kind of accident from any accident previously evaluated.

The proposed change revises the values of the minimum and maximum volume of the suppression chamber water pool. The proposed change will not alter any physical mechanism by which the suppression chamber water pool volume is maintained between the minimum and maximum values. The suppression chamber pool water level will continue to be maintained between -27 and -31 inches. The suppression chamber pool water level limits are retained in Technical Specification (TS) 3.6.2.1.a.1, since this is the information available to the operators regarding the suppression chamber pool water volume limits. These level limits are equivalent to the suppression chamber pool water volume limits; therefore, it is only the presentation of the equivalency that is being relocated to the Bases and the Updated Final Safety Analysis Report (UFSAR). As such, the relocated suppression chamber pool water volume limits are not required to be in the TS to provide adequate protection of the public health and safety. As a result of the proposed strainer changes, there are no physical changes to any other suppression chamber components or instrumentation. No new mode of operation is introduced as a result of the proposed change. Analyses have been performed which conclude that the proposed change will not affect the operability of the equipment designed to mitigate the consequences of an accident. Therefore, the proposed change does not create the possibility of a new or different kind of accident from any accident previously evaluated.

3. The proposed license amendments do not involve a significant reduction in a margin of safety.

The proposed change revises the values of the minimum and maximum suppression chamber water pool volumes. The pressure suppression chamber water pool mitigates the consequences of several postulated accidents and transients by providing a heat sink for the primary coolant system. These accidents and events are the postulated design basis LOCA, an SRV blowdown event, an ATWS event, an Appendix R fire, and station blackout events. The consequences of the change in the suppression pool water volume limits have been evaluated for these events, and there is no significant reduction in the margin of safety.

The results of the analyses for the postulated accidents and events indicate the temperature of the suppression chamber pool water could increase slightly as a consequence of the decrease in the minimum suppression chamber pool water volume limit. However, the suppression chamber pool water and containment temperatures remain within acceptable values. The impact of the calculated increase in containment temperature on the available Net Positive Suction Head (NPSH) for the Residual Heat Removal (RHR) and Core Spray pumps has been evaluated for the postulated design basis LOCA and indicate[s] adequate NPSH is maintained throughout the event.

The potential impact of the proposed change to the suppression chamber pool water volume limits on the SRV line loads, SRV discharge line reflood height, wetwell pressurization, suppression chamber pool swell loads, vent thrust loads, and condensation oscillation and chugging loads was evaluated with the conclusion that there are no adverse impacts on these parameters.

In addition, a small suppression chamber pool water temperature increase could result due to the reduction in minimum suppression pool volume limit in the event reactor shutdown is conducted through a path utilizing the suppression chamber pool. Such a shutdown path is an alternative to the normal RHR shutdown cooling function, and the small potential increase in temperature results in a negligible increase in the time required to reach cold shutdown conditions. Cold shutdown conditions can still be reached well within the Technical Specification requirements.

The proposed increase in the suppression pool water volume limit does not adversely impact containment parameters as a result of postulated accidents and events. The potential increase in temperature of the pressure suppression chamber pool water does not significantly decrease the ability to maintain containment parameters within acceptable limits. The potential increase in time to reach cold shutdown conditions utilizing the suppression pool as an alternative to the normal RHR shutdown cooling function is negligible. Therefore, the proposed change to revise the minimum and maximum suppression water pool volumes does not involve a significant reduction in a margin of safety.

The suppression chamber pool water level limits are retained in TS 3.6.2.1.a.1, since this is the information available to the operators regarding the suppression chamber pool water volume limits. These level limits are equivalent to the suppression chamber pool water volume limits and the equivalency is being relocated to the Bases and the UFSAR. As such, the relocated suppression chamber pool water volume limits are not required to be in the TS to provide adequate protection of the public health and safety.

The NRC staff has reviewed the licensee's analysis and, based on this review, it appears that the three standards of 10 CFR 50.92(c) are satisfied. Therefore, the NRC staff proposes to determine that the amendment request involves no significant hazards consideration.

Local Public Document Room location: University of North Carolina at Wilmington, William Madison Randall Library, 601 S. College Road, Wilmington, North Carolina 28403-3297.

Attorney for licensee: William D. Johnson, Vice President and Senior Counsel, Carolina Power & Light Company, Post Office Box 1551, Raleigh, North Carolina 27602

NRC Project Director: Gordon E. Edison, Acting

Entergy Operations, Inc., Docket No. 50-368, Arkansas Nuclear One, Unit No. 2, Pope County, Arkansas

Date of amendment request: July 21, 1997

Description of amendment request: Technical Specification Change Request Concerning Emergency Feedwater Surveillance Testing. This request is to make several changes to the ANO-2 Technical Specifications including an extension of the emergency feedwater (EFW) pump surveillance testing frequency, a reduction in the minimum steam generator pressure required to perform the surveillance testing on the turbine-driven EFW pump, and a modification to the EFW pump testing requirements.

Basis for proposed no significant hazards consideration determination: As required by 10 CFR 50.91(a), the licensee has provided its analysis of the issue of no significant hazards consideration, which is presented below:

1. Does not Involve a Significant Increase in the Probability or Consequences of an Accident Previously Evaluated.

The proposed changes included in this amendment request are being made to the emergency feedwater (EFW) system technical specification (TS) surveillances. These changes include surveillance interval modifications, allowances to perform the turbine driven EFW pump surveillance at a lower steam generator (S/G) pressure, removing the requirements to perform specific EFW surveillance requirements (SRs) during plant shutdowns, bases changes, and various administrative changes. These changes are consistent with the applicable SRs located in NUREG-1432 and have therefore, been previously approved by the NRC.

These changes do not alter the functional characteristics of any plant component and do not allow any new modes of operation of any component. The accident mitigation features of the plant are not affected by the proposed amendment request. No modifications have been made to the EFW system due to this amendment request. Although the minimum steam generator pressure has been reduced for the turbine driven EFW pump testing, calculations show that significant margin exists between the proposed value and that needed to adequately perform the test. The capability of the EFW pumps to perform their required safety function is not impacted by this change. The addition of the electric driven EFW flow path verification will help [to] assure proper alignment of both trains of EFW following extended outages.

The accident mitigation features of the plant are not affected by the proposed amendment. No modification has been made to the pump or turbine driver. The capability of the turbine driven EFW pump to perform its required function is not impacted by this change. The EFW pumps will be tested in accordance with the more restrictive of the

data points required by the safety analysis or the inservice testing program. Therefore, this change does not involve a significant increase in the probability or consequences of any accident previously evaluated.

2. Does Not Create the Possibility of a New or Different Kind of Accident from any Previously Evaluated.

No new possibility for an accident is introduced by modifying the proposed specifications for the surveillance testing of the EFW pumps. The EFW surveillance requirements will continue to demonstrated the pump's ability to perform its safety function. The modifications to the proposed EFW surveillance requirements are consistent with the current revision of NRC approved NUREG -1432, ''Standard Technical Specifications Combustion Engineering Plants'' (ITS). Therefore, this change does not create the possibility of a new or different kind of accident from any previously evaluated.

3. Does Not Involve a Significant Reduction in Margin of Safety.

The safety function of the EFW system is not altered as a result of this change. The capability of the EFW pumps to perform their required function is not impacted by this change. The capability of the EFW pumps is not impacted by this change. The EFW pumps will be tested and proven operable in accordance with the more restrictive of the data points required by the safety analysis of the inservice testing program. The addition of the electric driven EFW flow path verification will help assure [to] proper alignment of both trains of EFW following extended outages. Therefore, this change does not involve a significant reduction in the margin of safety.

Therefore, based upon the reasoning presented above and the previous discussion of the amendment request, Entergy Operations has determined that the requested change does not involve significant hazards consideration.

The NRC staff has reviewed the licensee's analysis and, based on this review, it appears that the three standards of 10 CFR 50.92(c) are satisfied. Therefore, the NRC staff proposes to determine that the amendment request involves no significant hazards consideration.

Local Public Document Room location: Tomlinson Library, Arkansas Tech University, Russellville, AR 72801

Attorney for licensee: Nicholas S. Reynolds, Esquire, Winston and Strawn, 1400 L Street, N.W., Washington, DC 20005-3502

NRC Project Director: James Clifford, Acting

Florida Power Corporation, et al., Docket No. 50-302, Crystal River Nuclear Generating Plant, Unit No. 3, Citrus County, Florida

Date of amendment request: June 26, 1997

Description of amendment request: The proposed amendment would revise the Operating License No. DPR-72, License Condition 2.C.(5) and delete the requirement for installation and testing of flow indicators in the emergency core cooling system to provide indication of 40 gallons per minute flow for boron dilution from the license. Approval of this amendment will allow removal of the appropriate flow indicators, DH-45-Fl and DH-46-Fl, from the Crystal River 3 (CR3) Final Safety Analysis Report.

Basis for proposed no significant hazards consideration determination: As required by 10 CFR 50.91(a), the licensee has provided its analysis of the issue of no significant hazards consideration, which is presented below:

Criterion 1

The change does not involve a significant increase in the probability or consequences of an accident previously evaluated.

This license amendment removes the requirement for flow indication on the DH drop line and auxiliary pressurizer spray line for boron precipitation mitigation during a LOCA [Loss of Coolant Accident]. The original need for these indicators was to provide flow indication to the operator to aid in decision making relative to an alternate active method for boron precipitation prevention. Alternate active methods have been replaced by the passive flow path through the gaps which exist between the reactor vessel and the reactor vessel internals. Since auxiliary pressurizer spray flow is no longer used, and no other active means is required to be employed by the operator in the event drop line flow is not indicated, the original usefulness of and need for this indication no longer exists. Removal of this requirement from the license condition does not involve a change in the Improved Technical Specifications. The operators do not use the flow indication for decision making in post-accident conditions. Since these instruments are no longer used for boron precipitation mitigation during a LOCA, abandonment or removal of flow indicator DH-45-Fl and DH-46-Fl does not increase the probability of an accident because no previously evaluated accidents at CR-3 are initiated by DH-45-Fl or DH-46-Fl. Those CR-3 accidents that are analyzed are contained in the Final Safety Analysis Report (FSAR) and include events such as Loss-of-Coolant Accidents, Main Steam Line Breaks, Station Blackout, Anticipated Transients Without Scram, etc. Since DH-45-Fl and DH-46-Fl are attached to the outside of the DH drop line and auxiliary pressurizer spray line, their removal will not change the design, material, or construction standards applicable to the DH System piping. The removal of the indicator will not affect overall system performance of the ECCS. All of these previously evaluated accidents described in the CR-3 FSAR have dose consequences which remain well within the requirements of 10 CFR Part 100 (25 rem whole body, 300 rem thyroid) and GDC [General Design Criterion] 19 (5 rem whole body, or its equivalent to any part of the body). Removal of DH-45-Fl and DH-46-Fl will not alter any assumptions made in evaluating the radiological consequences of any accident described in the FSAR nor will it affect any fission product barriers since the ECCS and containment systems will still perform to meet design requirements. Therefore, removal of DH-45-Fl and DH-46-Fl will not alter the consequences of an accident previously evaluated.

Criterion 2

The change does not create the possibility of a new or different kind of accident from any accident previously evaluated.

The proposed license amendment removes the requirement for indicators which were originally installed to aid the operator in decision making relative to an alternate flow path for boron precipitation mitigation during a LOCA. These indicators no longer serve this purpose, since alternate active flow paths are no longer considered. Evaluations which consider boron precipitation no longer rely on three active methods of mitigation, but rather one active and one passive. Operator action is not required to effect the backup method in the event that the primary method fails due to a single active failure. The flow indicators are external to the DH System piping. They do not penetrate any piping so their removal cannot create the possibility of a new or different kind of accident. The accident mitigation strategies remain the same regardless of whether or not the flow indicators are present. Therefore, the flow indicators serve no purpose in the analyses. The proposed amendment does not affect any of the parameters or conditions that could contribute to the initiation of any accidents.

Criterion 3

The change does not involve a significant reduction in the margin of safety.

Boron precipitation within the reactor vessel during post-LOCA conditions, if it were to occur, would challenge the margin of safety that is provided by assuring compliance with Criterion 5 of 10 CFR 50.46. The license amendment does not change the methodology of mitigating the consequences of boron precipitation following a LOCA as described in the current licensing basis. The primary method of flow through the DH drop line and the use of gap flow as the ''backup'' method for prevention of boron precipitation have been analyzed, shown to meet all the criteria of 10 CFR 50.46, and accepted by the NRC. The passive method requires no specific operator action for initiation, in the event that the primary method fails due to a single active failure. Therefore, the indication serves no safety function and does not involve a significant reduction in the margin of safety.

The NRC staff has reviewed the licensee's analysis and, based on this review, it appears that the three standards of 50.92(c) are satisfied. Therefore, the NRC staff proposes to determine that the amendment request involves no significant hazards consideration.

Local Public Document Room location: Coastal Region Library, 8619 W. Crystal Street, Crystal River, Florida 34428

Attorney for licensee: R. Alexander Glenn, General Counsel, Florida Power Corporation, MAC - A5A, P. O. Box 14042, St. Petersburg, Florida 33733-4042

NRC Project Director: Frederick J. Hebdon

Florida Power Corporation, et al., Docket No. 50-302, Crystal River Nuclear Generating Plant, Unit No. 3, Citrus County, Florida

Date of amendment request: July 18, 1997

Description of amendment request: The proposed amendment would revise the Crystal River 3 (CR-3) technical specifications (TS) to incorporate a new TS 3.4.11 for a Low Temperature Overpressure Protection (LTOP) System. The proposed changes would be consistent with the recommendations in the NRC Generic Letter 88-11, ''NRC Position on Radiation Embrittlement of Reactor Vessel Materials and Its Impact on Plant Operations.'' TS 3.5.3 and associated TS Bases would also be revised to reflect the proposed change.

Basis for proposed no significant hazards consideration determination: As required by 10 CFR 50.91(a), the licensee has provided its analysis of the issue of no significant hazards consideration, which is presented below:

1. Does Not Involve a Significant Increase in the Probability or Consequences of an Accident Previously Evaluated.

This change does not involve a significant increase in the probability or consequences of any accident previously evaluated.

There are currently no LTOP requirements in the CR-3 Improved Technical Specifications. CR-3 currently implements LTOP features through administrative controls and a lowered PORV [power-operated relief valve] setpoint. The proposed change will establish new LTOP technical specification requirements necessary to preclude an LTOP event from occurring. The proposed LTOP requirements are based on safety analyses that apply ASME [American Society of Mechanical Engineers] Code Case N-514. These requirements will decrease the probability of a low temperature overpressure event by providing protection for all pressure and temperature combinations for which a low temperature overpressure event may be postulated.

The consequences of a low temperature overpressure accident are not affected by this change. There is no change to the 10 CFR [Code of Federal Regulations] Part 100 dose calculation for a low temperature overpressure accident.

2. Does Not Create the Possibility of a New or Different Kind of Accident from any Previously Evaluated

This change does not create the possibility of a new or different kind of accident from any previously evaluated.

The new LTOP Technical Specification does not require modification to the plant nor does it create a new mode of plant operation. The LTOP system adds no new accident initiators.

3. Does Not Involve a Significant Reduction in the Margin of Safety.

The proposed change does not involve a significant reduction in the margin of safety and will provide added safety benefit gained through the requirements to preclude a low temperature overpressurization event to the RCS [reactor coolant system].

The margin of safety prior to having an LTOP system was limited due to the informal, administrative method of minimizing the impact of a low temperature overpressure accident. By formalizing these requirements into a technical specification, at the least, margin of safety is retained and perhaps improved due to the elevated significance of required actions.

The NRC staff has reviewed the licensee's analysis and, based on this review, it appears that the three standards of 50.92(c) are satisfied. Therefore, the NRC staff proposes to determine that the amendment request involves no significant hazards consideration.

Local Public Document Room location: Coastal Region Library, 8619 W. Crystal Street, Crystal River, Florida 34428

Attorney for licensee: R. Alexander Glenn, General Counsel, Florida Power Corporation, MAC - A5A, P. O. Box 14042, St. Petersburg, Florida 33733-4042

NRC Project Director: Frederick J. Hebdon

Florida Power Corporation, et al., Docket No. 50-302, Crystal River Nuclear Generating Plant, Unit No. 3, Citrus County, Florida

Date of amendment request: July 29, 1997

Description of amendment request: The proposed amendment would revise the Crystal River Nuclear Generating Unit 3 (CR3) technical specifications (TS) to add subcooling margin and decay heat removal (low pressure injection) flow and correct certain nomenclature in the post-accident monitoring (PAM) instrumentation TS. In addition, the licensee proposes to add emergency diesel generator (EDG) kilowatt (kW) indication to the PAM instrumentation. Specifically, the following TS would be revised:

A. Table 3.3.17-1, Function 8: The descriptor is changed from ''Containment Pressure (Narrow Range)'' to ''Containment Pressure (Expected Post-Accident Range).''

B. Table 3.3.17-1, Function 18: The required channels for Core Exit Temperature (Backup) is changed from ''2 sets of 5'' to ''3 per core quadrant.''

C. Table 3.3.17-1: A new Function 20 is added and designated as ''Low Pressure Injection Flow'', with 2 required channels, and Condition E.

D. Table 3.3.17-1: A new Function 21 is added and designated as ''Degrees of Subcooling'', with 2 required channels, and Condition E.

E. Table 3.3.17-1: A new Function 22 is added and designated as ''Emergency Diesel Generator kW Indication'', with 2 required channels, and Condition E. A note clarifying the number of required channels is added: ''(c): one indicator per EDG''.

Basis for proposed no significant hazards consideration determination: As required by 10 CFR 50.91(a), the licensee has provided its analysis of the issue of no significant hazards consideration, which is presented below. The items A, B, C, D and E corresponds to the specific TS changes described above.

1. The proposed changes will not significantly increase the probability or consequences of an accident previously evaluated because:

A/B. The changes in containment pressure and core exit thermocouple nomenclature do not reflect any physical changes to the facility. This would have no impact on accident probability or consequences.

C/D/E. The addition of low pressure injection flow, degrees of

subcooling, and EDG kW indication to the Post-Accident Monitoring Instrumentation LCO [Limiting Condition for Operation] is being done to comply with a commitment made during the technical specification improvement program to include in the technical specifications that instrumentation which monitors variables classified as Type A in accordance with Regulatory Guide 1.97. These three variables have been reclassified as Type A. The associated instruments are used in post-accident conditions to prompt the operators to take certain mitigative actions. Therefore, the probability of an accident occurring is unaffected. As part of the re-classification of these variables to Type A and inclusion in technical specifications, the associated monitoring instrumentation will be under more strict surveillance and control, which provides additional assurance that the prescribed manual operator actions will be implemented when necessary. This, in turn, assures the previously evaluated accident consequences remain valid.

2. The proposed changes will not create the possibility of a new or different kind of accident from any accident previously evaluated because:

A/B. The changes in containment pressure and core exit

thermocouple nomenclature do not reflect any physical changes to the facility. The changes provide clarification for the instruments which are required to comply with the LCO. This would not create possibility of a new or different kind of accident.

C/D/E.The addition of low pressure injection flow, degrees of subcooling, and EDG kW indication to the Post-Accident Monitoring Instrumentation LCO is being

done to comply with a commitment made during the technical specification improvement program to include in the technical specifications that instrumentation which monitors variables classified as Type A in accordance with Regulatory Guide 1.97. These three variables have recently been reclassified as Type A. The associated instruments are used after an accident occurs to prompt the operators to take certain mitigative actions. Since the instrumentation is used only post-accident, these changes do not create the possibility of a new or different kind of accident.

3. The proposed change will not involve a significant reduction to the margin of safety because:

A/B. The changes in containment pressure and core exit thermocouple nomenclature have no affect on the margin of safety. The changes provide clarification of the technical specifications. This reduces the potential for confusion regarding this instrumentation.

C/D/E. The addition of low pressure injection flow, degrees of subcooling, and EDG kW indication to the post-accident monitoring instrumentation table in technical specifications results in added controls on the OPERABILITY of this post-accident monitoring instrumentation and provides greater assurance that it will be available should an accident occur.

The NRC staff has reviewed the licensee's analysis and, based on this review, it appears that the three standards of 50.92(c) are satisfied. Therefore, the NRC staff proposes to determine that the amendment request involves no significant hazards consideration.

Local Public Document Room location: Coastal Region Library, 8619 W. Crystal Street, Crystal River, Florida 34428

Attorney for licensee: R. Alexander Glenn, General Counsel, Florida Power Corporation, MAC - A5A, P. O. Box 14042, St. Petersburg, Florida 33733-4042

NRC Project Director: Frederick J. Hebdon

Northeast Nuclear Energy Company (NNECO), et al., Docket No. 50-423, Millstone Nuclear Power Station, Unit No. 3, New London County, Connecticut

Date of amendment request: July 18, 1997

Description of amendment request: The proposed amendment adds a new Technical Specification and associated Bases to address the operability of the steam generator atmospheric relief bypass valves (SGARBVs).

Basis for proposed no significant hazards consideration determination: As required by 10 CFR 50.91(a), the licensee has provided its analysis of the issue of no significant hazards consideration, which is presented below:

NNECO has reviewed the proposed revision in accordance with 10CFR50.92 and has concluded that the revision does not involve a significant hazards consideration (SHC). The basis for this conclusion is that the three criteria of 10CFR50.92(c) are not satisfied. The proposed revision does not involve an SHC because the revision would not:

1. Involve a significant increase in the probability or consequence of an accident previously evaluated.

The operability of the SGARBVs provides a method to recover from a SGTR [steam generator tube rupture] event during which the operator is required to perform a limited cooldown to establish adequate subcooling as a necessary step to limit the primary to secondary break flow into the ruptured steam generator. For other design events, the SGARBVs provide a safety grade method for cooling the unit to residual heat removal entry conditions should the preferred heat sink via the steam bypass system or the steam generator atmospheric relief valves be unavailable. This proposed revision to the Technical Specifications will add a new Technical Specification 3/4.7.1.6 and its associated Bases Section 3/4.7.1.6 which were developed bases on the information contained in the Westinghouse Improved Standard Technical Specifications, NUREG 1431, Rev. 1. The proposed specification and bases provide further assurance that the SGARBVs will be available to function as described in the accident analysis.

Therefore, the proposed revision does not involve a significant increase in the probability or consequences of an accident previously evaluated.

2. Create the possibility of a new or different kind of accident from any accident previously evaluated.

This proposed revision to the Technical Specifications to add a new specification and bases for the SGARBVs does not cause a change in the operation of any system or component during normal or accident conditions.

Therefore, the proposed revision does not create the possibility of a new or different kind of accident from any accident previously evaluated.

3. Involve a significant reduction in a margin of safety.

The proposed new Technical Specification 3/4.7.1.6 and its associated Bases Section 3/4.7.1.6 were developed based on the information contained in the Westinghouse Improved Standard Technical Specifications, NUREG 1431, Rev. 1. The SGARBV's are not currently in the Technical Specifications of Millstone Unit No. 3 and are being added to ensure accident mitigation functional capability. The NUREG 1431, Rev. 1 surveillance frequency is 18 months. The NUREG 1431, Rev. 1 surveillance frequency bases reads ''operating experience has shown that these components usually pass the surveillance when performed at the 18 month frequency''. The proposed frequency acceptability has been evaluated by reviewing SGARBV AWO's [automated work order's] for the period from Jan. 1990 to April 1997 to confirm the absence of excessive work orders which indicate valve functional failures and none were identified. Additionally, each SGARBV line consists of one SGARBV and an associated block valve. These proposed changes are consistent with the design and operation of the SGARBVs. There is no negative affect on the dose consequences from any design basis event or core damage frequency.

Therefore, the proposed revision does not involve a significant reduction in a margin of safety.

In conclusion, based on the information provided, it is determined that the proposed revision does not involve an SHC.

The NRC staff has reviewed the licensee's analysis and, based on this review, it appears that the three standards of 10 CFR 50.92(c) are satisfied. Therefore, the NRC staff proposes to determine that the amendment request involves no significant hazards consideration.

Local Public Document Room location: Learning Resources Center, Three Rivers Community-Technical College, 574 New London Turnpike, Norwich, Connecticut, and the Waterford Library, ATTN: Vince Juliano, 49 Rope Ferry Road, Waterford, Connecticut

Attorney for licensee: Lillian M. Cuoco, Esq., Senior Nuclear Counsel, Northeast Utilities Service Company, P.O. Box 270, Hartford, CT 06141-0270

NRC Deputy Director: Phillip F. McKee

Northern States Power Company, Docket Nos. 50-282 and 50-306, Prairie Island Nuclear Generating Plant, Unit Nos. 1 and 2, Goodhue County, Minnesota

Date of amendment requests: November 27, 1996

Description of amendment requests: The proposed amendment[s] would incorporate new steam generator tube sleeve designs and installation and examination techniques into the Prairie Island Technical Specifications.

Basis for proposed no significant hazards consideration determination: As required by 10 CFR 50.91(a), the licensee has provided its analysis of the issue of no significant hazards consideration, which is presented below:

1. The proposed amendment[s] will not involve a significant increase in the probability or consequences of an accident previously evaluated.

The supporting technical evaluation and safety evaluation for the Combustion Engineering leak tight sleeves demonstrate that the sleeve configuration will provide steam generator tube structural and leakage integrity under normal operating and accident conditions. The sleeve configurations have been designed and analyzed in accordance with the requirements of the ASME [American Society of Mechanical Engineers] Code. Mechanical testing has shown that the sleeve and sleeve joints provide margin above acceptance

limits. Ultrasonic examination is used to verify the leak tightness of the above the [sic] tubesheet sleeve welds. Testing has demonstrated the leak tightness of the hard roll joint as well as the structural integrity of the hard roll joint. Tube rupture can not occur at the hard roll joint due to the reinforcing effect of the tubesheet. Tests have demonstrated that tube collapse will not occur due to postulated LOCA [loss-of-coolant accident] loadings.

The existing Technical Specification leakage rate requirements and accident analysis assumptions remain unchanged in the event that significant leakage did occur from the sleeve joints or that a sleeve assembly ruptured. Any leakage through the sleeve assembly is fully bounded by the existing steam generator tube rupture analysis included in the Prairie Island Plant USAR [updated safety analysis report]. The proposed sleeving repair does not adversely impact any other previously evaluated design basis accident.

The sleeve minimum acceptable wall thickness used for developing the depth based plugging limit for the sleeve is determined using the guidance of draft Regulatory Guide 1.121 [≥Bases for Plugging Degraded PWR [Pressurized-Water Reactor] Steam Generator Tubes≥] and the pressure stress equation of Section III of the ASME Code. Evaluation of the minimum acceptable wall thickness for normal, upset, and postulated accident condition loading per the ASME Code finds that the limiting condition is established from normal operating conditions which then bounds the upset and accident condition values. Allowance for non-destructive examination and growth of existing sleeve wall degradation must be made when determining the sleeve plugging limit. The proposed plugging limit is 40% through wall degradation. The sleeve assembly will be examined by state of the art non-destructive examination techniques on a periodic basis to provide early indication of sleeve degradation. The corrosion resistance of the Alloy 690 sleeve has been verified by field experience at Prairie Island. The oldest Alloy 690 sleeves were installed May 1987. No indication of corrosion of the sleeve or the parent tube in the weld joint has been identified by state-of-the-art eddy current examination. These oldest sleeve welds did not receive post weld heat treatment. In addition, 5 sleeves were removed for destructive examination in February, 1996. No corrosion was found in any of these sleeves including those dating from October 1992. The pulled sleeves had received post weld heat treatment. Post weld heat treatment can be optionally applied to the free span sleeve weld joints to reduce the susceptibility of the weld joint and parent tube to stress corrosion cracking. Since the sleeve design meets the requirements of the ASME code and mechanical tests have demonstrated margins above acceptance criteria, the installation of the Combustion Engineering leak tight sleeves will not increase the probability or consequences of an accident previously evaluated.

2. The proposed amendment[s] will not create the possibility of a new or different kind of accident from any accident previously analyzed.

Installation of sleeves does not introduce any significant changes to the plant design basis. The use of a sleeve to span a degraded region of steam generator tubing restores the structural and leakage integrity of the tubing to meet the original design bases. Stress and fatigue analysis of the sleeve assembly shows that the requirements for ASME Code are met. Mechanical testing has demonstrated that margin exists above the design criteria. Any hypothetical accident as a result of any degradation in the sleeved tube would be bounded by the existing tube rupture accident analysis.

3. The proposed amendment[s] will not involve a significant reduction in the margin of safety.

The use of the sleeves to repair degraded steam generator tubing has been demonstrated to maintain the integrity of the tube bundle commensurate with the requirements of the ASME Code and draft Regulatory Guide 1.121 and to maintain the primary to secondary pressure boundary under normal and postulated accident conditions. The safety factors used in the verification of the strength of the sleeve assembly are consistent with the safety factors in the ASME Boiler and Pressure Vessel Code used in steam generator design. The operational and faulted condition stresses and cumulative fatigue usage are bounded by the ASME Code requirements. The sleeve assembly has been verified by testing to prevent both tube pullout and significant leakage during normal and postulated accident conditions. A test program was conducted to ensure the rolled joint design for the lower joint in the tubesheet sleeve was leak tight and capable of withstanding the designs loads. The primary coolant pressure boundary of the sleeve assembly will be periodically inspected by non-destructive examination to identify sleeve degradation due to operation. Installation of sleeves will decrease the number of tubes which must be taken out of service. There is a small amount of primary coolant flow reduction due to sleeves for which an equivalent plugging sleeve to plug ratio is assigned and is used to assess the final equivalent plugging percentage used as an input to other safety analyses. Because the sleeve maintains the design basis requirements for the steam generator tubing, it is concluded that the proposed change does not result in a significant reduction in margin with respect to plant safety as defined in the USAR or the Technical Specification Bases.

Based on the evaluation described above, and pursuant to 10 CFR Part 50, Section 50.91, Northern States Power Company has determined that operation of the Prairie Island Nuclear Generating Plant in accordance with the proposed license amendment request does not involve any significant hazards considerations as defined by NRC regulations in 10 CFR Part 50, Section 50.92.

The NRC staff has reviewed the licensee's analysis and, based on this review, it appears that the three standards of 10 CFR 50.92(c) are satisfied. Therefore, the NRC staff proposes to determine that the amendment requests involve no significant hazards consideration.

Local Public Document Room location: Minneapolis Public Library, Technology and Science Department, 300 Nicollet Mall, Minneapolis, Minnesota 55401

Attorney for licensee: Jay Silberg, Esq., Shaw, Pittman, Potts, and Trowbridge, 2300 N Street, NW, Washington, DC 20037

NRC Project Director: John N. Hannon

Northern States Power Company, Docket Nos. 50-282 and 50-306, Prairie Island Nuclear Generating Plant, Unit Nos. 1 and 2, Goodhue County, Minnesota

Date of amendment requests: May 15, 1997

Description of amendment requests: The proposed amendments would change the Technical Specifications (TS) to revise certain limitations on reactor coolant system leakage and steam generator tube surveillance. The proposed changes would implement a voltage-based repair criteria per the requirements of NRC Generic Letter 95-05, ''Voltage-Based Repair Criteria for Westinghouse Steam Generator Tubes Affected by Outside Diameter Stress Corrosion Cracking.'' In addition, a typographical error in TS Section 4.12.c. is being corrected.

Basis for proposed no significant hazards consideration determination: As required by 10 CFR 50.91(a), the licensee has provided its analysis of the issue of no significant hazards consideration, which is presented below:

1. The proposed amendment[s] will not involve a significant increase in the probability or consequences of an accident previously evaluated.

The supporting technical evaluation and safety evaluation for the voltage based repair criteria demonstrate that steam generator tube structural and leakage integrity under normal operating and accident conditions will be maintained. Tube burst criteria are inherently satisfied during normal operating conditions due to the proximity of the tube support plate (TSP). Test data referenced in Generic Letter 95-05 indicates that tube burst cannot occur within the TSP, even for tubes which have 100% throughwall electric discharge machining notches, 0.75 inch long, provided that the TSP is adjacent to the notched area. Since tube-to-TSP proximity precludes tube burst during normal operating conditions, use of the criteria must retain tube integrity characteristics which maintain a margin of safety of 1.43 times the bounding faulted condition, main steamline break (MSLB) pressure differential. The Regulatory Guide (RG) 1.121 [≥Bases for Plugging Degraded PWR [Pressurized-Water Reactor] Steam Generator Tubes≥] criterion requiring maintenance of a safety factor of 1.43 times the MSLB pressure differential on tube burst

is satisfied by 7/8'' diameter tubing with bobbin coil indications with signal amplitudes less than the current 8.7 volts structural limit, regardless of the indicated depth measurement.

The upper voltage repair limit (V_{URL}) will be determined prior to each outage using the most recently NRC approved database to determine the tube structural limit (V_{SL}). The structural limit is reduced by allowances for nondestructive examination (NDE) uncertainty (V_{NDE}) and growth (V_{GR}) to establish V_{URL}. Using the Generic Letter (GL) 95-05 NDE and growth allowances for an example, the NDE uncertainty component of 20% and a voltage growth allowance of 30% per full power year can be utilized to establish a V_{URL} of 5.2 volts.

Relative to the expected leakage during accident condition loadings, it has been previously established that a postulated MSLB outside of containment but upstream of the main steam isolation valve (MSIV) represents the most limiting radiological conditions to the plugging criteria. In support of [the] implementation of the revised plugging limit, analyses will be performed to determine whether the distribution of cracking indications at the tube support plate intersections during future cycles are projected to be such that primary-to secondary leakage would result in postulated off site and control room doses exceeding the limits established for application of the voltage-based repair criteria at Prairie Island. A separate calculation has determined the maximum allowable MSLB leakage limit in a faulted loop. This limit was calculated using the technical specification reactor coolant system (RCS) Iodine-131 activity level of 1.0 microcuries per gram dose equivalent Iodine-131 and the recommended Iodine-131 transient spiking values consistent with NUREG-0800 [≥Standard Review Plan≥]. The projected MSLB leak rate calculation methodology prescribed in Section 2.b of Generic Letter 95-05 will be used to calculate the end-of-cycle (EOC) leakage. Projected EOC voltage distribution will be developed using the most recent EOC eddy current results and considering an appropriate voltage measurement uncertainty and indication growth allowance. The log-logistic probability of leakage correlation will be used to establish the MSLB leak rate used for comparison with the faulted loop allowable limit. Therefore, as implementation of the voltage-based repair criteria does not adversely affect steam generator tube integrity and implementation will be shown to result in acceptable dose consequences, the proposed amendment[s] [do] not result in any increase in the probability or consequences of an accident previously evaluated in the Updated Safety Analysis Report (USAR).

2. The proposed amendment[s] will not create the possibility of a new or different kind of accident from any accident previously analyzed.

Implementation of the proposed steam generator tube voltage-based repair criteria does not introduce any significant changes to the plant design basis. Use of the voltage-based repair criteria does not provide a mechanism which could result in an accident outside of the region of the tube support plate elevations since tubes with outside diameter stress corrosion cracking (ODSCC) not occurring inside the thickness of the tube support plates will be plugged or repaired. Neither a single or multiple tube rupture event would be expected during all plant conditions in a steam generator in which the voltage based repair limit has been applied.

Northern States Power will implement a maximum primary-to-secondary leak rate limit of 150 gpd [gallons per day] per steam generator to help preclude the potential for excessive leakage during all plant conditions. The Regulatory Guide 1.121 criterion for establishing operational leak rate limits that require plant shutdown are based upon leak-before-break considerations to detect a free span crack before potential tube rupture during faulted plant conditions. The 150 gpd limit provides for leakage detection and plant shutdown in the event of the occurrence of an unexpected single crack resulting in leakage that is associated with the longest permissible crack length.

The operational leakage limit will be reduced to 150 gpd limit consistent with Generic Letter 95-05. This limit is expected to provide for plant shutdown prior to reaching critical lengths for MSLB conditions using the lower 95% leak rate data. Additionally, this leak-before-break evaluation assumes that the entire crevice area is uncovered during blowdown. Partial uncover will provide benefit to the burst capacity of the intersection and only a small percentage of the TSPs are deflected greater than the TSP thickness during a postulated MSLB.

As steam generator tube integrity upon implementation of the voltage-based repair criteria continues to be maintained through inservice inspection and primary-to secondary leakage monitoring, the possibility of a new or different kind of accident from any accident previously evaluated is not created.

Therefore, the proposed change does not create the possibility of a new or different kind of accident from any accident previously evaluated.

3. The proposed amendment[s] will not involve a significant reduction in the margin of safety.

The use of the voltage-based repair criteria at Prairie Island maintains steam generator tube integrity commensurate with the criteria of the ASME [American Society of Mechanical Engineers] Code and Regulatory Guide 1.121. Regulatory Guide 1.121 describes a method acceptable to the Commission for meeting GDCs [General Design Criteria] 14, 15, 30, 31, and 32 by reducing the probability or the consequences of steam generator tube rupture. This is accomplished by determining the limiting conditions of degradation of steam generator tubing, as established by inservice inspection, for which tubes with unacceptable cracking should be repaired or removed from service. Upon implementation of the proposed criteria, even under the worst case conditions, the occurrence of ODSCC at the tube support plate elevations is not expected to lead to the steam generator tube rupture event during normal or faulted plant conditions. The EOC distribution of crack indications at the tube support plate elevations will be confirmed to result in acceptable primary-to-secondary leakage during all plant conditions in order to assure that radiological consequences meet the requirements of Generic Letter 95-05.

Previous evaluations have indicated a potential for tube deformation and collapse during a postulated loss-of-coolant accident (LOCA) plus safe-shutdown-earthquake (SSE) event. The tube collapse potential arises from TSP deformation at the support plate wedges. Evaluation of the Westinghouse umbrella seismic spectra provided in Westinghouse letter NSP-92-152 for Model 51 steam generators shows that Prairie Island is bounded by those spectra and that no tubes will undergo deformation due to the combined effects of LOCA plus SSE. Therefore, no tubes need to be excluded from application of the voltage based criteria due to deformation resulting from combined LOCA plus SSE loadings. Addressing Regulatory Guide 1.83 [≥Inservice Inspection of Pressurized Water Reactor Steam Generator Tubes≥] considerations, implementation of the voltage-based repair criteria is supplemented by enhanced eddy current inspection guidelines to provide consistency in voltage normalization, by an extensive bobbin coil inspection which will include 100% of the hot leg TSP intersections and cold leg intersections down to the lowest cold leg TSP with known ODSCC, by the determination of the TSPs having ODSCC using at least 20% random sampling of tubes inspected over their full length, and by rotating pancake coil inspection (or equivalent) requirements for the larger indications left in service to characterize the principal degradation as ODSCC.

As noted previously, implementation of the tube support plate intersection voltage-based repair criteria will decrease the number of tubes which must be repaired. The installation of steam generator tube plugs or sleeves reduces the RCS flow margin. Thus, implementation of the voltage-based repair criteria will maintain the margin of flow that would otherwise be reduced in the event of increased tube plugging.

Based on the above, it is concluded that the proposed license amendment request does not result in a significant reduction in margin with respect to plant safety as defined in the USAR or any Bases of the plant Technical Specifications.

Based on the evaluation described above, and pursuant to 10 CFR Part 50, Section 50.91, Northern States Power Company has determined that operation of the Prairie Island Nuclear Generating Plant in accordance with the proposed license amendment request does not involve any significant hazards considerations as defined by NRC regulations in 10 CFR Part 50, Section 50.92.

The NRC staff has reviewed the licensee's analysis and, based on this review, it appears that the three standards of 10 CFR 50.92(c) are satisfied. In addition, the proposed correction to a typographical error has no effect on the three standards of 10

CFR 50.92(c). Therefore, the NRC staff proposes to determine that the amendment requests involve no significant hazards consideration.

Local Public Document Room location: Minneapolis Public Library, Technology and Science Department, 300 Nicollet Mall, Minneapolis, Minnesota 55401

Attorney for licensee: Jay Silberg, Esq., Shaw, Pittman, Potts, and Trowbridge, 2300 N Street, NW, Washington, DC 20037

NRC Project Director: John N. Hannon

PECO Energy Company, Public Service Electric and Gas Company, Delmarva Power and Light Company, and Atlantic City Electric Company, Dockets Nos. 50-277 and 50-278, Peach Bottom Atomic Power Station, Units Nos. 2 and 3, York County, Pennsylvania

Date of application for amendments: June 4, 1997

Description of amendment request: The proposed Technical Specifications (TSs) amendment revises TS Surveillance Requirement 3.8.2.1 to no longer require that automatic emergency diesel generator (EDG) auto-start and trip bypass features must be functional when the emergency core cooling system (ECCS) is not required to be operable.

Basis for proposed no significant hazards consideration determination: As required by 10 CFR 50.91(a), the licensee has provided its analysis of the issue of no significant hazards consideration, which is presented below:

1. The proposed change to the facility does not involve a significant increase in the probability or consequences of an accident previously evaluated.

The proposed change will eliminate an inconsistency between Technical Specifications 3.3.5.1, 3.5.2, and 3.8.2 by clarifying that the EDG auto-start and EDG trip bypass on ECCS initiation capability is not required during periods in which ECCS is not required to be OPERABLE. No physical changes to the facility will be made per this change. The systems, structures, and components affected by this change are considered to be accident mitigators and not accident initiators. The affected systems, structures, and components will continue to operate within the current design parameters. The ability of the EDGs to auto-start on a loss of offsite power or degraded voltage will remain unchanged. No new failure modes or conditions adverse to safety will be created as a result of this change. Therefore, the proposed change does not involve a significant increase in the probability or consequences of an accident previously evaluated.

2. The proposed change to the facility does not create the possibility of a new or different kind of accident from any accident previously evaluated.

The proposed change will eliminate an inconsistency between Technical Specifications 3.3.5.1, 3.5.2, and 3.8.2 by clarifying that the EDG auto-start and EDG trip bypass on ECCS initiation capability is not required during periods in which ECCS is not required to be OPERABLE. No physical changes to the facility will be made per this change. The systems, structures and components affected are considered to be accident mitigators not accident initiators. The affected systems, structures and components will continue to operate within the current design parameters. No new failure modes or conditions adverse to safety will be created as a result of this change. The plant conditions which do not require any ECCS to be OPERABLE, (i.e., the plant in MODE 5, the spent fuel storage pool gates are removed, water level is greater than or equal to 458 inches above reactor pressure vessel instrument zero, and there are no OPDRVs [operations with the potential of draining the reactor vessel] in progress) ensure sufficient coolant inventory to allow operator action to prevent uncovering the fuel. The ability of the EDGs to auto-start on a loss of offsite power or degraded voltage will remain unchanged. Therefore, the proposed change does not involve a significant increase in the probability or consequences of an accident previously evaluated.

3. The proposed change to the facility does not involve a significant reduction in a margin of safety.

The proposed change will eliminate an inconsistency between Technical Specifications 3.3.5.1, 3.5.2, and 3.8.2 by clarifying that the EDG auto-start and EDG trip bypass on ECCS initiation capability is not required during periods in which ECCS is not required to be OPERABLE. The ECCS and EDGs capability to perform the required safety functions as described/required in the bases of the current plant Technical Specifications will be maintained. Therefore, the proposed change to the facility does not result in a significant reduction in any margin of safety.

The NRC staff has reviewed the licensee's analysis and, based on this review, it appears that the three standards of 10 CFR 50.92(c) are satisfied. Therefore, the NRC staff proposes to determine that the amendment request involves no significant hazards consideration.

Local Public Document Room location: Government Publications Section, State Library of Pennsylvania, (REGIONAL DEPOSITORY) Education Building, Walnut Street and Commonwealth Avenue, Box 1601, Harrisburg, PA 17105

Attorney for licensee: J. W. Durham, Sr., Esquire, Sr. V. P. and General Counsel, PECO Energy Company, 2301 Market Street, Philadelphia, PA 19101

NRC Project Director: John F. Stolz

PECO Energy Company, Public Service Electric and Gas Company, Delmarva Power and Light Company, and Atlantic City Electric Company, Docket No. 50-278, Peach Bottom Atomic Power Station, Unit No. 3, YorkCounty, Pennsylvania

Date of application for amendment: June 30, 1997

Description of amendment request: The proposed amendment would revise the Technical Specification (TS) 2.1.1.2 safety limit minimum critical power ratios (SLMCPRs) to be consistent with the use of GE 13 fuel in the Unit 3 core for operating cycle 12.

Basis for proposed no significant hazards consideration determination: As required by 10 CFR 50.91(a), the licensee has provided its analysis of the issue of no significant hazards consideration, which is presented below:

1. The proposed TS changes do not involve a significant increase in the probability or consequences of an accident previously evaluated.

The derivation of the cycle-specific SLMCPRs for incorporation into the TS, and its use to determine cycle-specific thermal limits, have been performed using the methodology discussed in ''General Electric Standard Application for Reactor Fuel,'' NEDE-24011-P-A-13, and U.S. Supplement, NEDE-24011-P-A-13-US, August, 1996, and the ''Proposed Amendment 25 to GE Licensing Topical Report NEDE-24011-P-A (GESTAR II) on Cycle Specific Safety Limit MCPR.'' Amendment 25 was submitted by GENE to the U.S. Nuclear Regulatory Commission (USNRC) on December 13, 1996. This change in SLMCPRs cannot increase the probability or severity of an accident.

The basis of the SLMCPR calculation is to ensure that greater than 99.9% of all fuel rods in the core avoid transition boiling if the limit is not violated. The new SLMCPRs preserve the existing margin to transition boiling and fuel damage in the event of a postulated accident. The fuel licensing acceptance criteria for the SLMCPR calculation apply to PBAPS, Unit 3, Cycle 12 in the same manner as they have applied previously. The probability of fuel damage is not increased. Therefore, the proposed TS changes do not involve an increase in the probability or consequences of an accident previously evaluated.

2. The proposed TS changes do not create the possibility of a new or different kind of accident from any accident previously evaluated.

The SLMCPR is a TS numerical value, designed to ensure that transition boiling does not occur in 99.9% of all fuel rods in the core during the limiting postulated accident. It cannot create the possibility of any new type of accident. The new SLMCPRs are calculated using methodology discussed in ''General Electric Standard Application for Reactor Fuel,'' NEDE-24011-P-A-13, and U.S. Supplement, NEDE-24011-P-A-13-US, August, 1996, and the ''Proposed

Amendment 25 to GE Licensing Topical Report NEDE-24011-P-A (GESTAR II) on Cycle Specific Safety Limit MCPR.'' Amendment 25 was submitted by GENE to the U.S. Nuclear Regulatory Commission (USNRC) on December 13, 1996.

Therefore, the proposed TS changes do not create the possibility of a new or different kind of accident, from any accident previously evaluated.

3. The proposed TS changes do not involve a significant reduction in a margin of safety.

The margin of safety as defined in the TS Bases will remain the same. The new SLMCPRs are calculated using methodology discussed in ''General Electric Standard Application for Reactor Fuel,'' NEDE-24011-P-A-13, and U.S. Supplement, NEDE-24011-P-A-13-US, August, 1996, and the ''Proposed Amendment 25 to GE Licensing Topical Report NEDE-24011-P-A (GESTAR II) on Cycle Specific Safety Limit MCPR.'' Amendment 25 was submitted by GENE to the U.S. Nuclear Regulatory Commission (USNRC) on December 13, 1996. The fuel licensing acceptance criteria for the calculation of the SLMCPR apply to PBAPS [Peach Bottom Atomic Power Station], Unit 3 Cycle 12 in the same manner as they have applied previously. The SLMCPRs ensure that greater than 99.9% of all fuel rods in the core will avoid transition boiling if the limit is not violated, thereby preserving the fuel cladding integrity. Therefore, the proposed TS changes do not involve a reduction in a margin of safety.

The NRC staff has reviewed the licensee's analysis and, based on this review, it appears that the three standards of 10 CFR 50.92(c) are satisfied. Therefore, the NRC staff proposes to determine that the amendment request involves no significant hazards consideration.

Local Public Document Room location: Government Publications Section, State Library of Pennsylvania, (REGIONAL DEPOSITORY) Education Building, Walnut Street and Commonwealth Avenue, Box 1601, Harrisburg, PA 17105

Attorney for licensee: J. W. Durham, Sr., Esquire, Sr. V. P. and General Counsel, PECO Energy Company, 2301 Market Street, Philadelphia, PA 19101

NRC Project Director: John F. Stolz

Power Authority of the State of New York, Docket No. 50-333, James A. FitzPatrick Nuclear Power Plant, Oswego County, New York

Date of amendment request: April 14, 1997

Description of amendment request: The proposed amendment revises Appendix A, Section 6 of the Technical Specifications. The changes will enable Safety Review Committee (SRC) to review plant staff performance by deleting the plant staff performance requirement from Section 6.5.2.9.b and incorporating a plant staff review requirement in Section 6.5.2.8. The amendment also replaces the position title of Vice President (VP) Regulatory Affairs and Special Projects (RASP) with Director of Regulatory Affairs and Special Projects.

Basis for proposed no significant hazards consideration determination: As required by 10 CFR 50.91(a), the licensee has provided its analysis of the issue of no significant hazards consideration, which is presented below:

(1) Does the proposed license amendment involve a significant increase in the probability or consequences of an accident previously analyzed?

Response:

This amendment application does not involve a significant increase in the probability or consequences of an accident previously analyzed. The proposed changes allow the SRC to perform a review, rather than an audit, of plant staff performance. This change does not diminish the SRC's effectiveness. A review of the 1995 QA [quality assurance] audit of plant staff performance shows that no findings related to plant staff performance were issued. This indicates that the other review mechanisms currently in place are sufficient to ensure that plant staff performance is monitored.

The position title change of VP-RASP to Director-RASP is an administrative change as all previously performed functions are being maintained. Therefore, the proposed changes do not affect the probability or consequences of any previously analyzed accident.

(2) Does the proposed license amendment create the possibility of a new or different kind of accident from any accident previously evaluated?

Response:

This amendment application does not create the possibility of a new or different kind of accident from any accident previously evaluated. The proposed changes affect an SRC audit requirement and a management position title. These changes do not affect plant equipment or the way the plant operates. Therefore, they cannot create a new or different kind of accident.

(3) Does the proposed amendment involve a significant reduction in a margin of safety?

Response:

This amendment application does not involve a significant reduction in a margin of safety. The requested Technical Specification revisions require the SRC to review rather than audit facility staff performance and will not diminish the effectiveness of the SRC. A review of the 1995 audit confirms that performance of the annual audit is redundant as no findings or recommendations concerning plant staff performance were made. The QA/ORG quarterly trend reports and SRC review of facility staff performance are adequate to ensure that plant staff performance is properly monitored.

The position title change (VP-RASP to Director-RASP) is an administrative change as all previously performed functions are being maintained. Therefore, the proposed changes do not involve a significant reduction in a margin of safety.

The NRC staff has reviewed the licensee's analysis and, based on this review, it appears that the three standards of 50.92(c) are satisfied. Therefore, the NRC staff proposed to determine that the amendment request involves no significant hazards consideration.

Local Public Document Room location: Reference and Documents Department, Penfield Library, State University of New York, Oswego, New York 13126.

Attorney for licensee: Mr. Charles M. Pratt, 1633 Broadway, New York, New York 10019

NRC Project Director: Alexander W. Dromerick, Acting Project Director

Public Service Electric & Gas Company, Docket No. 50-354, Hope Creek Generating Station, Salem County, New Jersey

Date of amendment request: March 31, 1997, as supplemented by letter dated July 16, 1997. The July 16, 1997, supplement supersedes the March 31, 1997 application.

Description of amendment request: The proposed amendment would provide changes to Technical Specification (TS) 2.1.2, ''THERMAL POWER, High Pressure and High Flow,'' ACTION a.1.c for TS 3.4.1.1, ''Recirculation Loops,'' and the Bases for TS 2.1, ''Safety Limits.'' These changes are being made to implement an appropriately conservative Safety Limit Minimum Critical Power Ratio, to include Cycle 8 specific analyses, for all Hope Creek core and fuel designs.

Basis for proposed no significant hazards consideration determination: As required by 10 CFR 50.91(a), the licensee has provided its analysis of the issue of no significant hazards consideration, which is presented below:

1. The proposed changes do not involve a significant increase in the probability or consequences of an accident previously evaluated.

The derivation of the revised SLMCPRs for Hope Creek for incorporation into the Technical Specifications, and its use to determine cycle—specific thermal limits, have been performed using NRC approved methods. Additionally, interim implementing procedures which incorporate cycle—specific parameters have been used which result in a more restrictive value for SLMCPR. These calculations do not change the method of operating the plant and have no effect on the probability of an accident initiating event or transient.

There are no significant increases in the consequences of an accident previously evaluated. The basis of the MCPR Safety Limit is to ensure that no mechanistic fuel damage is calculated to occur if the limit is not violated. The new SLMCPRs preserve the

existing margin to transition boiling and the probability of fuel damage is not increased. Therefore, the proposed change does not involve an increase in the probability or consequences of an accident previously evaluated.

2. The proposed change does not create the possibility of a new or different kind of accident from any accident previously evaluated.

The proposed changes contained in this submittal result from an analysis of the Cycle 7 and Cycle 8 core reloads using the same fuel types as previous cycles. These changes do not involve any new method for operating the facility and do not involve any facility modifications. No new initiating events or transients result from these changes. Therefore, the proposed Technical Specification changes do not create the possibility of a new or different kind of accident, from any accident previously evaluated.

3. The proposed change does not involve a significant reduction in a margin of safety.

The margin of safety as defined in the Technical Specification bases will remain the same. The new SLMCPRs are calculated using NRC approved methods which are in accordance with the current fuel design and licensing criteria. Additionally, interim implementing procedures, which incorporate cycle—specific parameters, have been used. The MCPR Safety Limit remains high enough to ensure that greater than 99.9% of all fuel rods in the core will avoid transition boiling if the limit is not violated, thereby preserving the fuel cladding integrity. Therefore, the proposed Technical Specification changes do not involve a reduction in a margin of safety.

The NRC staff has reviewed the licensee's analysis and, based on this review, it appears that the three standards of 10 CFR 50.92(c) are satisfied. Therefore, the NRC staff proposes to determine that the amendment request involves no significant hazards consideration.

Local Public Document Room location: Pennsville Public Library, 190 S. Broadway, Pennsville, NJ 08070

Attorney for licensee: J. J. Keenan, Esquire, Nuclear Business Unit - N21, P.O. Box 236, Hancocks Bridge, NJ 08038

NRC Project Director: John F. Stolz

Public Service Electric & Gas Company, Docket No. 50-354, Hope Creek Generating Station, Salem County, New Jersey

Date of amendment request: April 1, 1997, as supplemented by letter dated May 30, 1997

Description of amendment request: The proposed amendment would provide changes to Technical Specifications (TSs) 4.6.1.1, ''Primary Containment Integrity,'' 3/4.6.1.2, ''Primary Containment Leakage,'' 3/4.6.1.3, ''Primary Containment Air Locks,'' 4.6.1.5.1, ''Primary Containment Structural Integrity,'' and 4.6.1.8.2, ''Drywell and Suppression Chamber Purge System.'' The amendment would also change the Bases for 3/4.6.1.2, ''Primary Containment Leakage,'' 3/4.6.1.3, ''Primary Containment Air Locks,'' 3.4.6.1.5, ''Primary Containment Structural Integrity,'' Section 6, ''Administrative Controls,'' and License Condition 2.D of Facility Operating License NPF-57. A new TS, 6.8.4.e, ''Primary Containment Leakage Rate Testing Program,'' would be added. These changes modify the TSs and the Facility Operating License to adopt the performance based containment leak rate testing requirements (Option B) of 10 CFR Part 50, Appendix J.

Basis for proposed no significant hazards consideration determination: As required by 10 CFR 50.91(a), the licensee has provided its analysis of the issue of no significant hazards consideration, which is presented below:

1. The proposed changes do not involve a significant increase in the probability or consequences of an accident previously evaluated.

Containment leak rate testing is not an initiator of any accident. The proposed changes do not make any physical changes to the containment and do not affect reactor operations or the accident analyses. Therefore, the proposed changes do not involve a significant increase in the probability of any previously evaluated accident.

Since the allowable leakage rate is not being changed and since the analysis documented in NUREG-1493, ''Performance-Based Containment Leak-Test Program'' concludes that the impact on public health and safety due to extended intervals is negligible, the proposed changes will not involve a significant increase in the consequences of any previously evaluated accident.

Therefore, adoption of a performance-based leakage testing requirements will provide an equivalent level of safety and does not involve a significant increase in the probability or consequences of an accident previously evaluated.

2. The proposed change does not create the possibility of a new or different kind of accident from any accident previously evaluated.

No physical changes are being made to the plant, nor are there any changes being made to the operation of the plant as a result of the proposed changes. In addition, no new failure modes of plant equipment previously evaluated are being introduced.

Therefore, the proposed amendment will not create the possibility of a new or different kind of accident from any previously evaluated.

3. The proposed change does not involve a significant reduction in a margin of safety.

The proposed changes are based on NRC-accepted provisions and maintain adequate levels of reliability of containment integrity. The performance-based approach to leakage rate testing recognizes that historically good results of containment testing provide appropriate assurance of future containment integrity. This supports the conclusion that the impact on the health and safety of the public as a result of extended test intervals is negligible. Since the analysis documented in NUREG-1493 confirms that the performance based schedule continues to maintain a minimal impact on public risk, it can be concluded that the margin of safety is not significantly affected by the proposed changes.

Therefore, the proposed amendment will not involve a significant reduction in a margin of safety.

The NRC staff has reviewed the licensee's analysis and, based on this review, it appears that the three standards of 10 CFR 50.92(c) are satisfied. Therefore, the NRC staff proposes to determine that the amendment request involves no significant hazards consideration.

Local Public Document Room location: Pennsville Public Library, 190 S. Broadway, Pennsville, New Jersey 08070

Attorney for licensee: Jeffrie J. Keenan, Esquire, Nuclear Business Unit - N21, P. O. Box 236, Hancocks Bridge, New Jersey 08038

NRC Project Director: John F. Stolz

Public Service Electric & Gas Company, Docket No. 50-354, Hope Creek Generating Station, Salem County, New Jersey

Date of amendment request: July 3, 1997

Description of amendment request: The proposed amendment would change Technical Specification Table 3.6.3-1, ''Primary Containment Isolation Valves'' to add valves to the list, therein.

Basis for proposed no significant hazards consideration determination: As required by 10 CFR 50.91(a), the licensee has provided its analysis of the issue of no significant hazards consideration, which is presented below:

1. The proposed changes do not involve a significant increase in the probability or consequences of an accident previously evaluated.

The accidents previously evaluated in the UFSAR [Updated Final Safety Analysis Report] that could be possibly affected by this proposal are those involving loss of coolant scenarios such as a piping or instrument line break. The proposed relief valves, associated piping and the affected portions of containment penetration piping are not initiators of those accidents evaluated in the UFSAR. The proposed relief valves limit the post-accident maximum expected pressures of the affected piping segments within ASME [American Society of Mechanical Engineers] code allowables and system design pressures. The modification does not cause any system or component to be operated outside of their design rating

allowed by applicable codes. The proposed relief valves will be safety-related and Seismic Category I components (except for the relief valve discharge piping, which will be non-safety related and seismically analyzed, and will meet the design, material and construction standards applicable to the affected piping segments[)].

The proposed modifications do not jeopardize the capability of the containment isolation valves in the affected penetrations to close on the receipt of a containment isolation signal or to mitigate the consequences of design basis accidents evaluated in the UFSAR. Although the modifications will result in system pressures to be above their currently established design values, the new peak operating pressures of the affected piping segments will be limited to within the requirements of the ASME code. The modification will not alter any assumptions previously made or change, degrade, or prevent actions described in or assumed in evaluating the radiological consequences of the postulated design basis accidents. Containment structure temperature and pressure limits will not be exceeded with this modification and the offsite dose consequences will not be affected.

Therefore these changes will not significantly increase the probability of an accident previously evaluated, nor involve a significant increase in the consequences of an accident previously evaluated.

2. The proposed change does not create the possibility of a new or different kind of accident from any accident previously evaluated.

Accidents or malfunctions of equipment important to safety previously evaluated in the UFSAR relating to the proposed modification involve the single active failure of a containment isolation valve to close upon receipt of a containment isolation signal or its failure to limit the containment bypass leakage following its closure. The proposed modification: 1) does not impact the automatic closure times of the containment isolation valves; 2) does not impact their capability to maintain leak tightness during a postulated design basis accident; and 3) does not adversely impact the manner in which any system is operated. The proposed modification does not compromise the UFSAR accident analysis assumptions and/or limits. The licensing basis safety analysis limits for all systems important to safety continue to be met. Furthermore, there is no change in plant testing proposed in this change request which could initiate an event. Therefore, these changes will not create the possibility of a new or different kind of accident from any accident previously evaluated.

3. The proposed change does not involve a significant reduction in a margin of safety.

The proposed modifications and Technical Specification changes do not change the design limits, acceptance criteria or accident analysis assumptions pertaining to the containment isolation valves, their associated piping or any other safety-related systems, structures or components. The proposed modification does not impact the automatic closure times of the containment isolation valves, nor does it impact their capability to maintain leak tightness during a postulated design basis accident. For the systems affected by these penetration modifications, there is no change in system function or structural integrity introduced with these proposed changes. Therefore, the changes contained in this request do not result in a significant reduction in a margin of safety for the containment isolation capability of Hope Creek.

The NRC staff has reviewed the licensee's analysis and, based on this review, it appears that the three standards of 10 CFR 50.92(c) are satisfied. Therefore, the NRC staff proposes to determine that the amendment request involves no significant hazards consideration.

Local Public Document Room location: Pennsville Public Library, 190 S. Broadway, Pennsville, NJ 08070

Attorney for licensee: J. J. Keenan, Esquire, Nuclear Business Unit - N21, P.O. Box 236, Hancocks Bridge, NJ 08038

NRC Project Director: John F. Stolz

Public Service Electric & Gas Company, Docket No. 50-354, Hope Creek Generating Station, Salem County, New Jersey

Date of amendment request: July 7, 1997

Description of amendment request: The proposed amendment would change Technical Specification (TS) 3/4.8.4.2, ''Motor Operated Valves - Thermal Overload Protection (BYPASSED),'' to relocate the list of applicable valves (TS Table 3.8.4.2-1) to the Hope Creek (HC) Generating Station Updated Final Safety Analysis Report (UFSAR).

Basis for proposed no significant hazards consideration determination: As required by 10 CFR 50.91(a), the licensee has provided its analysis of the issue of no significant hazards consideration, which is presented below:

1. The proposed changes do not involve a significant increase in the probability or consequences of an accident previously evaluated.

The proposed TS revisions involve: 1) no hardware changes; 2) no changes to the operation of any systems or components in normal or accident operating conditions; and 3) no changes to existing structures, systems or components. The relocation of Technical Specification Table 3.8.4.2-1 to the UFSAR and existing surveillance procedures will continue to ensure that safety-related motor-operated valves (MOVs) are capable of performing their intended safety functions. Therefore these changes will not significantly increase the probability of an accident previously evaluated. To the extent practicable, these proposed changes were developed consistent with the changes approved by the NRC when developing NUREG-1433, ''Standard Technical Specifications, General Electric Plants, BWR/4'', with the intent of having this relocated information controlled in other plant documents subject to 10CFR50.59 provisions. Since the plant systems associated with these proposed changes will still be capable of: 1) meeting all applicable design basis requirements; and 2) retain the capability to mitigate the consequences of accidents described in the HC UFSAR, the proposed changes were determined to be justified. Therefore, these changes will not involve a significant increase in the consequences of an accident previously evaluated.

2. The proposed change does not create the possibility of a new or different kind of accident from any accident previously evaluated.

Relocation of Technical Specification Table 3.8.4.2-1 to the UFSAR will not adversely impact the operation of any safety related component or equipment. Since the proposed changes involve: 1) no hardware changes; 2) no changes to the operation of any systems or components; and 3) no changes to existing structures, systems or components, there can be no impact on the occurrence of any accident. To the extent practicable, these proposed changes were developed consistent with the changes approved by the NRC when developing NUREG-1433, ''Standard Technical Specifications, General Electric Plants, BWR/4'', with the intent of having this relocated information controlled in other plant documents subject to 10CFR50.59 provisions. Furthermore, there is no change in plant testing proposed in this change request which could initiate an event. Therefore, these changes will not create the possibility of a new or different kind of accident from any accident previously evaluated.

3. The proposed change does not involve a significant reduction in a margin of safety.

Relocation of Technical Specification Table 3.8.4.2-1 to the UFSAR is consistent, to the extent practicable, with the changes approved by the NRC when developing NUREG-1433, ''Standard Technical Specifications, General Electric Plants, BWR/4''. The MOV thermal overload protection table will reside in the UFSAR and will ensure that the associated MOVs will be capable of performing their intended safety functions. Any changes to this UFSAR table will be subject to the provisions of 10CFR50.59 and a separate safety evaluation would be developed to support any proposed changes that would subsequently be made. Therefore, the changes contained in this request do not result in a significant reduction in a margin of safety.

The NRC staff has reviewed the licensee's analysis and, based on this review, it appears that the three standards of 10 CFR 50.92(c) are satisfied. Therefore, the NRC staff proposes to determine that the amendment request involves no significant hazards consideration.

Local Public Document Room location: Pennsville Public Library, 190 S. Broadway, Pennsville, NJ 08070

Attorney for licensee: J. J. Keenan, Esquire, Nuclear Business Unit - N21,

P.O. Box 236, Hancocks Bridge, NJ 08038

NRC Project Director: John F. Stolz

Tennessee Valley Authority, Docket Nos. 50-259, 50-260 and 50-296, Browns Ferry Nuclear Plant, Units 1, 2 and 3, Limestone County, Alabama

Date of amendment request: June 2, 1997 (TS 387)

Description of amendment request: The proposed amendment allows continued plant operation with a single reactor recirculation loop in service. The Nuclear Regulatory Commission has previously determined single loop operation is generically acceptable as set forth in Generic Letter 86-09, ''Technical Resolution of Generic Issue B-59-(N-1) Loop Operation in BWRs [boiling water reactors] and PWRs [pressurized-water reactors].'' Single loop operation is also recognized as a standard mode of operation in the BWR/4 Improved Standard TS.

Basis for proposed no significant hazards consideration determination: As required by 10 CFR 50.91(a), the licensee has provided its analysis of the issue of no significant hazards consideration, which is presented below:

1. The proposed amendment does not involve a significant increase in the probability or consequences of an accident previously evaluated.

An analysis of the limiting operational transients has been performed by GE [General Electric] for BFN as documented in NEDO-24236 to demonstrate adequate margin to the Safety Limit Minimum Critical Power Ratio (SLMCPR). In addition, SLO [single loop operation] has been specified as a operating option for the transient and accident evaluations performed as part of the cycle-specific core reload analyses for Units 2 and 3 which ensure that operating limit Minimum Critical Power Ratios (OLMCPRs) for the current fuel types are established that maintain required margin to the fuel cladding safety limit. A cycle-specific analysis with SLO will be performed for Unit 1 prior to restart and experience indicates similar results are expected as those for Units 2 and 3.

A review of the values used in the statistical analysis used in the basis of the fuel cladding safety limit determined that, due to increased uncertainties in total core flow readings and Traversing In-Core Probe (TIP) readings during SLO, an increase in the SLMCPR of .02 is bounding when in SLO. Therefore, while operating in single-loop mode, an additional .02 is added to the OLMCPR which maintains the same margin to the fuel cladding safety limit as that established for two-loop operation. This is a conservative approach because the two-loop transients have been shown to be more severe than the equivalent single-loop events and, therefore, the OLMCPRs established for two-loop operation would always be bounding. Thus, the margin of safety for fuel clad integrity is assured and the probability or consequences associated with reactor transients is not increased for SLO.

SLO results in backflow through the jet pumps in the inactive recirculation loop which perturbs the relationship between the core flow and recirculation drive flow on which the flow biased Average Power Range Monitor (APRM) and Rod Block Monitor (RBM) setpoint equations are based. To compensate, the proposed TS [Technical Specification] changes modify the setpoint equations to correct for one-loop operation. With this adjustment, the setpoint equations preserve the original relationship between the setpoints and the effective recirculation drive flow such that the consequences of a RWE [rod withdrawal event] in SLO are bounded by the cycle-specific RWE analyses. Therefore, these changes do not increase the probability or consequences of the RWE transient previously evaluated.

Average Planar Linear Heat Generation Rate (APLHGR) limits are established to ensure the acceptance criteria for fuel and Emergency Core Cooling Systems established in 10 CFR 50.46 are met. A SLO Loss of Coolant Accident (LOCA) analysis was performed using the SAFER/GESTR computer code as documented in NEDC-32484P, Revision 1, ''Browns Ferry Nuclear Plant, Units 1, 2, and 3, SAFER/GESTR-LOCA, Loss-of-Coolant Accident Analysis.''

The LOCA [loss of cooling accident] results for SLO using SAFER/GESTR showed that, with the application of an APLHGR multiplier as proposed in the TS change, the LOCA peak clad temperature for SLO will always be lower than that for limiting design basis pipe break for two-loop operation. An APLHGR multiplier of 0.9 is applicable for all current fuel types being used. This multiplier is documented in each cycle-specific reload analysis and included in the COLR [core operating limits report]. NEDC-32484P Revision 1 also concludes that the design basis accident (large breaks) are more affected than small break sequences and, therefore, the large break results are bounding for SLO.

The Recirculation Pump Seizure event in SLO was evaluated in NEDO-24236 and shown to be a non-limiting event. This conclusion is also supported by GE analyses on other BWRs.

In summary, based on the above discussion, the proposed changes for SLO do not increase the probability or consequences of an accident previously evaluated.

2. The proposed amendment does not create the possibility of a new or different kind of accident from any accident previously evaluated.

Although the proposed change allows extended operation in a configuration that was previously allowed for a limited period, analysis has shown (as described in item A above), that operation with one recirculation pump out-of-service is within existing analyses based on the proposed TS requirements. Therefore, the proposed change does not create the possibility of a new or different kind of accident from any accident previously evaluated.

3. The proposed amendment does not involve a significant reduction in a margin of safety.

The proposed change to operate in single-loop recirculation mode has been analyzed in accordance with established transient and accident methodologies, and margins of safety for the design basis accidents and transients analyzed in Chapter 14 of the BFN UFSAR [updated final safety analysis report] have not been significantly reduced. The basis for this conclusion is outlined in item A above. Therefore, the proposed change does not involve a significant reduction in a margin of safety.

The NRC staff has reviewed the licensee's analysis and, based on this review, it appears that the three standards of 10 CFR 50.92(c) are satisfied. Therefore, the NRC staff proposes to determine that the amendment request involves no significant hazards consideration.

Local Public Document Room location: Athens Public Library, 405 E. South Street, Athens, Alabama 35611

Attorney for licensee: General Counsel, Tennessee Valley Authority, 400 West Summit Hill Drive, ET l0H, Knoxville, Tennessee 37902

NRC Project Director: Frederick J. Hebdon

Vermont Yankee Nuclear Power Corporation, Docket No. 50-271, Vermont Yankee Nuclear Power Station, Vernon, Vermont

Date of amendment request: June 9, 1997

Description of amendment request: The amendment proposes to update the Technical Specifications, Section 6.0, to add a reference to NRC-approved methodologies which will be used to validate or generate the operating limits in the Vermont Yankee Core Operating Limits Report.

Basis for proposed no significant hazards consideration determination: As required by 10 CFR 50.91(a), the licensee has provided its analysis of the issue of no significant hazards consideration which is presented below:

1. The proposed change will not involve any significant increase in the probability or consequences of an accident. The change updates the Technical Specifications to include [an] NRC approved method reference to allow calculation of thermal hydraulic stability limits. It does not affect plant operation and will not weaken or degrade the facility.

2. The proposed change will not create the possibility of a new or different kind of accident since the change is administrative. No physical alterations of the plant, setpoint changes, or operating conditions are proposed.

3. The proposed change will not involve a significant reduction in a margin of safety. The change involves an update to the Administrative Controls in Section 6.0 of the Technical Specifications by adding a reference to NRC approved methods. This administrative change does not alter plant safety margins.

The NRC staff has reviewed the licensee's analysis and, based onthis review, it appears that the three standards of 10 CFR 50.92(c) are satisfied. Therefore, the NRC staff proposes to determine that the amendment request involves no significant hazards consideration.

Local Public Document Room location: Brooks Memorial Library, 224 Main Street, Brattleboro, VT 05301

Attorney for licensee: R. K. Gad, III, Ropes and Gray, One International Place, Boston, MA 02110-2624

NRC Project Director: Ronald B. Eaton, Acting

Previously Published Notices Of Consideration Of Issuance Of Amendments To Facility Operating Licenses, Proposed No Significant Hazards Consideration Determination, And Opportunity For A Hearing

The following notices were previously published as separate individual notices. The notice content was the same as above. They were published as individual notices either because time did not allow the Commission to wait for this biweekly notice or because the action involved exigent circumstances. They are repeated here because the biweekly notice lists all amendments issued or proposed to be issued involving no significant hazards consideration.

For details, see the individual notice in the **Federal Register** on the day and page cited. This notice does not extend the notice period of the original notice.

Commonwealth Edison Company, Docket Nos. STN 50-454 and STN 50-455, Byron Station, Unit Nos. 1 and 2, Ogle County, Illinois Docket Nos. STN 50-456 and STN 50-457, Braidwood Station, Unit Nos. 1 and 2, Will County, Illinois

Date of amendment request: June 9, 1997

Description of amendment request: The proposed amendments authorize a revision to the realistic dose values for the process gas system rupture in Section 15.0 of the Byron/Braidwood (B/B) Updated Final Safety Analysis Report (UFSAR). During preparation of a UFSAR change package, ComEd discovered that the Final Safety Analysis Report (FSAR) had not been updated to correct an error from the previous revision of the dose calculation. Since the correct dose value is greater than that previously reported, the consequences of the accident had increased, and an unreviewed safety question resulted.

Date of publication of individual notice in Federal Register: July 10, 1997 (62 FR 37079).

Expiration date of individual notice: August 11, 1997 (as corrected (62 FR 39282)).

Local Public Document Room location: For Byron, the Byron Public Library District, 109 N. Franklin, P.O. Box 434, Byron, Illinois 61010; for Braidwood, the Wilmington Public Library, 201 S. Kankakee Street, Wilmington, Illinois 60481

Pennsylvania Power and Light Company, Docket Nos. 50-387 and 50-388 Susquehanna Steam Electric Station, Units 1 and 2, Luzerne County, Pennsylvania

Date of amendment request: June 27, 1997, as supplemented by letter dated July 2, 1997 The supplemental letter provided clarifying information and did not change the initial proposed no significant hazards consideration determination.

Brief description of amendment request: These amendments clarify, in the technical specifications (TSs) for each unit, the methodology used to satisfy surveillance requirements for the laboratory analysis of activated carbon (charcoal) samples from the standby gas treatment system (SGTS) and the control room emergency outside air supply system (CREOASS). The specific changes are made to Sections 4.6.5.3.b.2 and 4.6.5.3.c for the SGTS and to Sections 4.7.b.2 and 4.7.2.c for the CREOASS, to include a reference to American Society for Testing Materials (ASTM), ''Radioiodine Testing of Nuclear-Grade Gas Phase Adsorbents,'' ASTM D3803-79. Date of publication of individual notice in **Federal Register:** July 8, 1997 (62 FR 36580)

Expiration date of individual notice: August 7, 1997

Local Public Document Room location: Osterhout Free Library, Reference Department, 71 South Franklin Street, Wilkes-Barre, PA 18701

Notice Of Issuance Of Amendments To Facility Operating Licenses

During the period since publication of the last biweekly notice, the Commission has issued the following amendments. The Commission has determined for each of these amendments that the application complies with the standards and requirements of the Atomic Energy Act of 1954, as amended (the Act), and the Commission's rules and regulations. The Commission has made appropriate findings as required by the Act and the Commission's rules and regulations in 10 CFR Chapter I, which are set forth in the license amendment.

Notice of Consideration of Issuance of Amendment to Facility Operating License, Proposed No Significant Hazards Consideration Determination, and Opportunity for A Hearing in connection with these actions was published in the **Federal Register** as indicated.

Unless otherwise indicated, the Commission has determined that these amendments satisfy the criteria for categorical exclusion in accordance with 10 CFR 51.22. Therefore, pursuant to 10 CFR 51.22(b), no environmental impact statement or environmental assessment need be prepared for these amendments. If the Commission has prepared an environmental assessment under the special circumstances provision in 10 CFR 51.12(b) and has made a determination based on that assessment, it is so indicated.

For further details with respect to the action see (1) the applications for amendment, (2) the amendment, and (3) the Commission's related letter, Safety Evaluation and/or Environmental Assessment as indicated. All of these items are available for public inspection at the Commission's Public Document Room, the Gelman Building, 2120 L Street, NW., Washington, DC, and at the local public document rooms for the particular facilities involved.

Commonwealth Edison Company, Docket Nos. 50-373 and 50-374, LaSalle County Station, Units 1 and 2, LaSalle County, Illinois

Date of application for amendments: April 14, 1997

Brief description of amendments: The amendments revise Technical Specification (TS) 3/4.3.8, ''Feedwater/Main Turbine Trip System Actuation Instrumentation'' by changing the minimum channels required from three to four. This change reflects a modification that is being installed to add an auxiliary contact to the trip system logic. In addition, the amendments revise the TS action statement for inoperable channels to be consistent with the Improved Standard Technical Specifications and to account for the additional channel.

Date of issuance: July 29, 1997

Effective date: Immediately, to be implemented within 60 days.

Amendment Nos.: 119 and 104

Facility Operating License Nos. NPF-11 and NPF-18: The amendments revised the Technical Specifications.

Date of initial notice in **Federal Register:** June 18, 1997 (62 FR 33120). The Commission's related evaluation of the amendments is contained in a Safety Evaluation dated July 29, 1997. No significant hazards consideration comments received: No.

Local Public Document Room location: Jacobs Memorial Library, Illinois Valley Community College, Oglesby, Illinois 61348

Consumers Energy Company, Docket No. 50-255, Palisades Plant, Van Buren County, Michigan

Date of application for amendment: March 27, 1997, as supplemented July 7, 1997

Brief description of amendment: The amendment revises the Palisades Plant license and technical specifications to reflect the licensee's name change from ''Consumers Power Company'' to ''Consumers Energy Company.''

Date of issuance: July 21, 1997

Effective date: July 21, 1997

Amendment No.: 176

Facility Operating License No. DPR-20: Amendment revised the license and the technical specifications.

Date of initial notice in **Federal Register:** April 23, 1997 (62 FR 19828) The July 7, 1997, letter provided supplementary information within the scope of the original application and did not change the NRC staff's initial proposed no significant hazards considerations determination. The Commission's related evaluation of the amendment is contained in a Safety Evaluation dated July 21, 1997. No significant hazards consideration comments received: No.

Local Public Document Room location: Van Wylen Library, Hope College, Holland, Michigan 49423

Duke Power Company, et al., Docket Nos. 50-413 and 50-414, Catawba Nuclear Station, Units 1 and 2, York County, South Carolina

Date of application for amendments: May 27, 1997

Brief description of amendments: The amendments delete Section 4.7.13.3.a.2 of each unit's Technical Specifications, regarding the minimum volume and boron concentration of borated water available to the Standby Makeup Pump of the Standby Shutdown System.

Date of issuance: July 21, 1997

Effective date: As of the date of issuance to be implemented within 30 days

Amendment Nos.: 160 and 152

Facility Operating License Nos. NPF-35 and NPF-52: Amendments revised the Technical Specifications.

Date of initial notice in **Federal Register:** June 18, 1997 (62 FR 33121) The Commission's related evaluation of the amendments is contained in a Safety Evaluation dated July 21, 1997. No significant hazards consideration comments received: No.

Local Public Document Room location: York County Library, 138 East Black Street, Rock Hill, South Carolina 29730

Florida Power Corporation, et al., Docket No. 50-302, Crystal River Unit No. 3 Nuclear Generating Plant, Citrus County, Florida

Date of application for amendment: February 17, 1997, as revised May 1, 1997.

Brief description of amendment: Changes to Technical Specification (TS) to implement 10 CFR 50, Appendix J Option B relating to containment leakage tests.

Date of issuance: July 24, 1997

Effective date: July 24, 1997

Amendment No.: 156

Facility Operating License No. DPR-72: Amendment revised the Technical Specifications.

Date of initial notice in **Federal Register:** February 28, 1997 (62 FR 9214), as superseded June 4, 1997 (62 FR 30632) The Commission's related evaluation of the amendment is contained in a Safety Evaluation dated July 24, 1997. No significant hazards consideration comments received: No.

Local Public Document Room location: Coastal Region Library, 8619 W. Crystal Street, Crystal River, Florida 32629

Northeast Nuclear Energy Company, et al., Docket No. 50-423, Millstone Nuclear Power Station, Unit No. 3, New London County, Connecticut

Date of application for amendment: April 28, 1997

Brief description of amendment: Technical Specification (TS) 3.7.6 requires that flood protection be provided for the service water pump cubicles and components when the water level exceeds a specific value. The amendment (1) adds the closing of the service water pump cubicle sump drain valves to the TS, (2) revises the wording of the action statement to be consistent with the limiting condition for operation, and (3) revises the associated Bases section.

Date of issuance: July 28, 1997

Effective date: As of the date of issuance, to be implemented within 60 days.

Amendment No.: 144

Facility Operating License No. NPF-49: Amendment revised the Technical Specifications.

Date of initial notice in **Federal Register:** June 4, 1997 (62 FR 30636) The Commission's related evaluation of the amendment is contained in a Safety Evaluation dated July 28, 1997. No significant hazards consideration comments received: No.

Local Public Document Room location: Learning Resources Center, Three Rivers Community-Technical College, 574 New London Turnpike, Norwich, Connecticut 06360, and the Waterford Library, ATTN: Vince Juliano, 49 Rope Ferry Road, Waterford, Connecticut 06385

Northern States Power Company, Docket No. 50-263, Monticello Nuclear Generating Plant, Wright County, Minnesota

Date of application for amendment: January 23, 1997, as supplemented January 28, March 4, June 19, July 2, July 16 (2 letters), July 21, and July 25, 1997

Brief description of amendment: The amendment documents the staff's review and approval of the apparent unreviewed safety questions (USQs) associated with (1) the updated analysis of the design-basis accident (DBA) containment temperature and pressure response, and (2) the reliance on containment pressure to compensate for the potential deficiency in net positive suction head (NPSH) for the emergency core cooling system (ECCS) pumps during a DBA with the worst case scenario assumptions. The amendment also authorizes the licensee to change the Technical Specification bases and the Updated Safety Analysis Report, to reflect the reliance of containment pressure to compensate for the potential deficiency in NPSH for the ECCS pumps following a DBA.

Date of issuance: July 25, 1997

Effective date: July 25, 1997. Implementation shall be as specified in Appendix C to the license.

Amendment No.: 98

Facility Operating License No. DPR-22: Amendment revised the license and the licensee's updated safety analysis report.

Date of initial notice in **Federal Register:** February 12, 1997 (62 FR 6576) The June 19, 1997, submittal, expanded the scope of the initial submittal dated January 23, 1997, and therefore, another notice was issued in **Federal Register** on June 24, 1997 (62 FR 34086). The July 2, July 16 (2 letters), July 21, and July 25, 1997, submittals provided additional clarifying information within the scope of the application and did not change the NRC staff's proposed no significant hazards considerations determination that was based on the June 19, 1997, submittal. Therefore, renoticing was not warranted. The Commission's related evaluation of the amendment is contained in a Safety Evaluation dated July 25, 1997. No significant hazards consideration comments received: No.

Local Public Document Room location: Minneapolis Public Library,

Technology and Science Department, 300 Nicollet Mall, Minneapolis, Minnesota 55401

Pennsylvania Power and Light Company, Docket Nos. 50-387 and 50-388 Susquehanna Steam Electric Station, Units 1 and 2, Luzerne County, Pennsylvania

Date of application for amendments: June 27, 1997, as supplemented by letter dated July 2, 1997 The supplemental letter provided clarifying information and did not change the initial proposed no significant hazards consideration determination.

Brief description of amendments: These amendments clarify, in the technical specifications (TSs) for each unit, the methodology used to satisfy surveillance requirements for the laboratory analysis of activated carbon (charcoal) samples from the standby gas treatment system (SGTS) and the control room emergency outside air supply system (CREOASS). The specific changes are made to Sections 4.6.5.3.b.2 and 4.6.5.3.c for the SGTS and to Sections 4.7.b.2 and 4.7.2.c for the CREOASS, to include a reference to American Society for Testing Materials (ASTM), ''Radioiodine Testing of Nuclear-Grade Gas Phase Adsorbents,'' ASTM D3803-79.

Date of issuance: July 30, 1997

Effective date: Both units, as of date of issuance, to be implemented within 30 days.

Amendment Nos.: 167 and 141

Facility Operating License Nos. NPF-14 and NPF-22: The amendments revised the Technical Specifications. Public comments requested as to proposed no significant hazards consideration: Yes (62 FR 36580). That notice provided an opportunity to submit comments on the Commission's proposed no significant hazards consideration determination by July 22, 1997. No comments have been received. The notice also provided an opportunity to request a hearing by August 7, 1997, but indicated that if the Commission makes a final no significant hazards consideration determination, any such hearing would take place after issuance of the amendment. On July 9, 1997, the NRC staff issued a Notice of Enforcement Discretion in order to delay enforcement of the current, subject, TS requirements until the NRC could take formal action on the July 2, 1997, application. The Commission's related evaluation of the amendments, finding of exigent circumstances, consultation with the State of Pennsylvania, and final no significant hazards consideration determination are contained in a Safety Evaluation dated July 30, 1997.

Local Public Document Room location: Osterhout Free Library, Reference Department, 71 South Franklin Street, Wilkes-Barre, PA 18701

Public Service Electric & Gas Company, Docket No. 50-354, Hope Creek Generating Station, Salem County, New Jersey

Date of application for amendment: February 11, 1997.

Brief description of amendment: This amendment changes the Hope Creek Technical Specification (TS) Sections 3/4.8.1, ''A.C. Sources,'' 6.8, ''Procedures and Programs,'' and the Bases for Section 3/4.8, ''Electrical Power Systems,'' to include: 1) the relocation of existing surveillance requirements related to diesel fuel oil chemistry; 2) the introduction of a new program under TS 6.8.4.e, ''Diesel Fuel Oil Testing Program≥; 3) revisions to the TS Bases for Section 3/4.8 to incorporate information associated with the TS changes; and 4) editorial changes to implement required corrections.

Date of issuance: July 24, 1997

Effective date: As of date of issuance, to be implemented within 60 days.

Amendment No.: 100

Facility Operating License No. NPF-57: This amendment revised the Technical Specifications.

Date of initial notice in **Federal Register:** March 26, 1997 (62 FR 14469) The Commission's related evaluation of the amendment is contained in a Safety Evaluation dated July 24, 1997. No significant hazards consideration comments received: No.

Local Public Document Room location: Pennsville Public Library, 190 S. Broadway, Pennsville, New Jersey 08070

Public Service Electric & Gas Company, Docket No. 50-354, Hope Creek Generating Station, Salem County, New Jersey

Date of application for amendment: March 3, 1997, as supplemented by letter dated May 5, 1997

Brief description of amendment: This amendment changes Hope Creek TSs as follows: (1) TS 3/4.3.1, ''Reactor Protection System Instrumentation,'' TS 3/4.3.2, ''Isolation Actuation Instrumentation,'' and TS 3/4.3.3, ''Emergency Core Cooling System Actuation Instrumentation,'' to include additional information concerning response time testing; (2) TS 4.0.5 to reference inservice inspection and test requirements; (3) TS 3/4.6.1, ''Primary Containment,'' and associated Bases to reflect a design modification; (4) TS 3/4.7.7, ''Main Turbine Bypass System,'' to specify a new operability requirement; and (5) the Bases for TS 3/4.8, ''Electrical Power Systems.''

Date of issuance: July 24, 1997

Effective date: As of the date of issuance to be implemented within 60 days.

Amendment No.: 101

Facility Operating License No. NPF-57: This amendment revised the Technical Specifications.

Date of initial notice in **Federal Register:** June 18, 1997 (62 FR 33131) The Commission's related evaluation of the amendment is contained in a Safety Evaluation dated July 24, 1997. No significant hazards consideration comments received: No.

Local Public Document Room location: Pennsville Public Library, 190 S. Broadway, Pennsville, New Jersey 08070

Public Service Electric & Gas Company, Docket Nos. 50-272 and 50-311, Salem Nuclear Generating Station, Unit Nos. 1 and 2, Salem County, New Jersey

Date of application for amendments: February 11, 1997, as supplemented on May 1, June 12, and July 23, 1997

Brief description of amendments: The amendments add a new Technical Specification, 3/4.7.10, ''Chilled Water System - Auxiliary Building Subsystem,'' and an associated Bases section to address the support function this system provides to other necessary safety systems.

Date of issuance: July 29, 1997

Effective date: Unit 1 to be implemented prior to entering Mode 6 from the current unit outage; Unit 2 as of its date of issuance, to be implemented within 10 days of issuance.

Amendment Nos.: 199 and 182

Facility Operating License Nos. DPR-70 and DPR-75.: The amendments revised the Technical Specifications.

Date of initial notice in **Federal Register:** March 12, 1997 (62 FR 11497) The licensee's supplemental letters provided additional information that did not affect the staff's proposed no significant hazards consideration determination. The Commission's related evaluation of the amendments is contained in a Safety Evaluation dated July 29, 1997. No significant hazards consideration comments received: No.

Local Public Document Room location: Salem Free Public Library, 112 West Broadway, Salem, NJ 08079

Tennessee Valley Authority, Docket No. 50-390 Watts Bar Nuclear Plant, Unit 1, Rhea County, Tennessee

Date of application for amendment: October 23, 1996, as supplemented

December 11, 1996, January 31, February 10 and 24, March 11, April 4 and 11, May 28, June 26, and July 15, 1997.

Brief description of amendment: The amendment changes the Watts Bar Nuclear Plant, Unit 1, Technical Specifications (TS) to increase the spent fuel storage capacity from 484 fuel assemblies to 1610 fuel assemblies and to increase the initial enrichment of the fuel to be stored in the spent fuel storage racks from 3.5 weight percent (wt%) to 5.0 wt%. This modification also changes the center-to-center spacing of stored fuel assemblies and reflects the use of burnup credit rack modules to be installed peripherally along the pool walls.

The amendment, as proposed by the licensee, would also involve the installation of spent fuel racks in the spent fuel cask pit for 225 storage spaces thus increasing the total WBN spent fuel storage capacity to 1835 spent fuel assemblies. The licensee proposed to provide an impact shield that would be placed over the fuel in the cask pit when heavy loads are moved near or across the cask pit area. The staff is continuing its review of this aspect of the licensee's proposal. Accordingly, this amendment authorizes the reracking and usage of the main spent fuel pool, as proposed for a total of 1610 spent fuel spaces. However, it does not authorize the installation of storage racks or storage of spent fuel in the spent fuel cask pit. The staff's review of that aspect of the licensee's application will be addressed by further correspondence.

Date of issuance: July 28, 1997

Effective date: July 28, 1997

Amendment No.: 6

Facility Operating License No. NPF-90: Amendment revises the TS.

Date of initial notice in **Federal Register:** April 2, 1997 (62 FR 15733) The April 4, and 11, May 28, June 26 and July 15, 1997 letters provided clarifying informaion that did not change the initial proposed no significant hazards consideration determination.

The Commission's related evaluation of the amendment is contained in an environmental assessment dated April 7, 1997, and a Safety Evaluation dated July 28, 1997. No significant hazards consideration comments received: None

Local Public Document Room location: Chattanooga-Hamilton County Library, 1001 Broad Street, Chattanooga, TN 37402

Virginia Electric and Power Company, et al., Docket Nos. 50-338 and 50-339, North Anna Power Station, Units No. 1 and No. 2, Louisa County, Virginia

Date of application for amendments: November 9, 1987, as supplemented March 31, 1988, June 8, 1992, and February 4, 1997

Brief description of amendments: These amendments reformat the operability and surveillance requirements for the intermediate range channels.

Date of issuance: July 30, 1997

Effective date: July 30, 1997

Amendment Nos.: 206 and 187

Facility Operating License Nos. NPF-4 and NPF-7: Amendments revised the Technical Specifications.

Date of initial notice in **Federal Register:** June 18, 1997 (62 FR 33136) The Commission's related evaluation of the amendments is contained in a Safety Evaluation dated July 30, 1997. No significant hazards consideration comments received: No.

Local Public Document Room location: The Alderman Library, Special Collections Department, University of Virginia, Charlottesville, Virginia 22903-2498

Wolf Creek Nuclear Operating Corporation, Docket No. 50-482, Wolf Creek Generating Station, Coffey County, Kansas

Date of amendment request: February 17, 1997

Brief description of amendment: The amendment revises the technical specifications to move Table 3.6-1, ''Containment Isolation Valves'' to Wolf Creek Generating Station procedures. In addition, the technical specifications have been modified to remove all references to Table 3.6-1. This change is in accordance with the guidance provided in Generic Letter 91-08, ''Removal of Component Lists from Technical Specifications,'' dated May 6, 1991.

Date of issuance: July 23, 1997

Effective date: July 23, 1997, to be implemented within 30 days from the date of issuance.

Amendment No.: 108

Facility Operating License No. NPF-42: The amendment revised the Technical Specifications and the Operating License.

Date of initial notice in **Federal Register:** April 23, 1997 (62 FR 19838) The Commission's related evaluation of the amendment is contained in a Safety Evaluation dated July 23, 1997. No significant hazards consideration comments received: No.

Local Public Document Room locations: Emporia State University, William Allen White Library, 1200 Commercial Street, Emporia, Kansas 66801 and Washburn University School of Law Library, Topeka, Kansas 66621

Dated at Rockville, Maryland, this 6th day of August, 1997.

For the Nuclear Regulatory Commission

Jack W. Roe,

Director, Division of Reactor Projects III/IV, Office of Nuclear Reactor Regulation.

[Doc. 97–21244 Filed 8–12–97; 8:45 am]

BILLING CODE 7590–01–F

PENSION BENEFIT GUARANTY CORPORATION

Proposed Submission of Information Collection for OMB Review; Comment Request; Payment of Premiums

AGENCY: Pension Benefit Guaranty Corporation.

ACTION: Notice of intention to request extension of OMB approval.

SUMMARY: The Pension Benefit Guaranty Corporation (''PBGC'') intends to request that the Office of Management and Budget (''OMB'') extend approval, under the Paperwork Reduction Act, of the collection of information under its regulation on Payment of Premiums (29 CFR part 4007), including Form 1–ES, Form 1, and Schedule A to Form 1, and related instructions (OMB control number 1212–0009; expires February 28, 1998). The collection of information also includes a certification (on Schedule A) of compliance with requirements to provide certain notices to participants under the PBGC's regulation on Disclosure to Participants (29 CFR part 4011), and surveys of plan administrators to assess compliance with those requirements. This notice informs the public of the PBGC's intent and solicits public comment on the collection of information.

DATES: Comments should be submitted by October 14, 1997.

ADDRESSES: Comments may be mailed to the Office of the General Counsel, suite 340, Pension Benefit Guaranty Corporation, 1200 K Street, NW., Washington, DC 20005–4026, or delivered to that address between 9 a.m. and 4 p.m. on business days. Written comments will be available for public inspection at the PBGC's Communications and Public Affairs Department, suite 240 at the same address, between 9 a.m. and 4 p.m. on business days.

Copies of the collection of information may be obtained without charge by writing to the PBGC's Communications and Public Affairs Department at the address given above

or calling 202–326–4040. (For TTY and TDD, call 800–877–8339 and request connection to 202–326–4040). The premium payment regulation can be accessed on the PBGC's home page at http://www.pbgc.gov.

FOR FURTHER INFORMATION CONTACT: Harold J. Ashner, Assistant General Counsel, or Deborah C. Murphy, Attorney, Office of the General Counsel, Pension Benefit Guaranty Corporation, 1200 K Street, NW., Washington, DC 20005–4026, 202–326–4024. (For TTY and TDD, call 800–877–8339 and request connection to 202–326–4024).

SUPPLEMENTARY INFORMATION: Section 4007 of Title IV of the Employee Retirement Income Security Act of 1974 (''ERISA'') requires the Pension Benefit Guaranty Corporation (''PBGC'') to collect premiums from pension plans covered under Title IV pension insurance programs. Pursuant to ERISA section 4007, the PBGC has issued its regulation on Payment of Premiums (29 CFR part 4007). Section 4007.3 of the premium payment regulation requires plans, in connection with the payment of premiums, to file certain forms prescribed by the PBGC, and § 4007.10 requires plans to retain and make available to the PBGC records supporting or validating the computation of premiums paid.

The forms prescribed are PBGC Form 1–ES and Form 1 and (for single-employer plans only) Schedule A to Form 1. Form 1–ES is issued, with instructions, in the PBGC's Estimated Premium Payment Package. Form 1 and Schedule A are issued, with instructions, in the PBGC's Annual Premium Payment Package.

The premium forms are needed to determine the amount and record the payment of PBGC premiums, and the submission of forms and retention and submission of records are needed to enable the PBGC to perform premium audits. The plan administrator of each pension plan covered by Title IV of ERISA is required to file one or more of the premium payment forms each year. The PBGC uses the information on the premium payment forms to identify the plans paying premiums and to verify whether plans are paying the correct amounts. That information and the retained records are used for audit purposes.

In addition, section 4011 of ERISA and the PBGC's regulation on Disclosure to Participants (29 CFR part 4011) require plan administrators of certain underfunded single-employer pension plans to provide an annual notice to plan participants and beneficiaries of the plans' funding status and the limits on the Pension Benefit Guaranty Corporation's guarantee of plan benefits. The participant notice requirement only applies (subject to certain exemptions) to plans that must pay a variable rate premium. In order to monitor compliance with Part 4011, plan administrators must indicate on Schedule A to Form 1 that the participant notice requirements have been complied with. The PBGC has also conducted surveys of plan administrators to assess compliance.

The collection of information under the regulation on Payment of Premiums, including Form 1–ES, Form 1, and Schedule A to Form 1, and related instructions has been approved by OMB under control number 1212–0009 through February 28, 1998. This collection of information also includes the certification and surveys of compliance with the participant notice requirements (but not the participant notices themselves). The PBGC intends to request that OMB extend its approval of this collection of information for another three years. (The participant notices constitute a different collection of information that has been separately approved by OMB.)

Under the Retirement Protection Act of 1994, certain special premium rules for regulated public utility company plans cease to apply for plan years beginning after 1997. The premium forms and instructions are being revised for 1998 to reflect this change. The revised forms and instructions will also include provisions regarding the use of electronic funds transfers as an optional form of payment for premiums and for PBGC payment of premium refunds, and will permit plan administrators whose filings are prepared by consultants to request that the PBGC no longer send them unneeded forms packages. Other appropriate revisions (e.g., clarifying and editorial changes) are also being made.

The PBGC estimates that it receives responses annually from about 49,500 plan administrators and that the total annual burden of the collection of information is about 4,043 hours and $11,236,125.

The PBGC is soliciting public comments to—

- Evaluate whether the collection of information is necessary for the proper performance of the functions of the agency, including whether the information will have practical utility;
- Evaluate the accuracy of the agency's estimate of the burden of the collection of information, including the validity of the methodology and assumptions used;
- Enhance the quality, utility, and clarity of the information to be collected; and
- Minimize the burden of the collection of information on those who are to respond, including through the use of appropriate automated, electronic, mechanical, or other technological collection techniques or other forms of information technology, e.g., permitting electronic submission of responses.

Issued in Washington, DC, this 8th day of August, 1997.

David M. Strauss,

Executive Director, Pension Benefit Guaranty Corporation.

[FR Doc. 97–21404 Filed 8–12–97; 8:45 am]

BILLING CODE 7708–01–P

OFFICE OF PERSONNEL MANAGEMENT

Submission for OMB Review; Comment Request for Review of a Revised Information Collection: Federal Employees Health Benefits (FEHB) Annuitant Express Open Season Interactive Voice Response System (IVR)

AGENCY: Office of Personnel Management.

ACTION: Notice.

SUMMARY: In accordance with the Paperwork Reduction Act of 1995 (Pub. L. 104–13, May 22, 1995), this notice announces that the Office of Personnel Management (OPM) has submitted to the Office of Management and Budget a request for review of a revised information collection. FEHB Annuitant Express Open Season IVR is used by retirees and survivors to collect information for changing FEHB enrollments, requesting plan brochures, requesting a change of address, requesting cancellation or suspension of FEHB benefits, requesting payment directly to OPM where the FEHB payment is greater than the monthly annuity amount, or requesting a copy of the FEHB Customer Satisfaction Survey results. We are replacing the OPM 2809 EZ1 and OPM 2809 EZ2 with the IVR technology to improve our response time to our customers.

We estimate 109,600 requests will be completed annually. Each request takes approximately 10 minutes to complete. The annual estimated burden is 18,167 hours. For copies of this proposal, contact Jim Farron on (202) 418–3208, or E-mail to jmfarron@opm.gov

DATES: Comments on this proposal should be received on or before September 12, 1997.

ADDRESSES: Send or deliver comments to—

Lorraine E. Dettman, Chief, Operations Support Division, Retirement and Insurance Service, U.S. Office of Personnel Management, 1900 E Street, NW, Room 3349, Washington, DC 20415

and

Joseph Lackey, OPM Desk Officer, Office of Information and Regulatory Affairs, Office of Management and Budget, New Executive Office Building, NW, Room 10235, Washington, DC 20503.

FOR INFORMATION REGARDING ADMINISTRATIVE COORDINATION CONTACT: Mary Beth Smith-Toomey, Management Services Division, (202) 606–0623.

Office of Personnel Management.

James B. King,

Director.

[FR Doc. 97–21355 Filed 8–12–97; 8:45 am]

BILLING CODE 6325–01–M

SECURITIES AND EXCHANGE COMMISSION

[Rel. No. IC–22782; 812–10506]

FundManager Portfolios; Notice of Application

August 7, 1997.

AGENCY: Securities and Exchange Commission (''SEC'').

ACTION: Notice of application for exemption under the Investment Company Act of 1940 (the ''Act'').

SUMMARY OF APPLICATION: Applicant requests an order under section 12(d)(1)(J) of the Act that would permit a fund of funds relying on section 12(d)(1)(F) to offer its shares to the public with a sales load that exceeds the 1.5% limit of section 12(d)(1)(F)(ii).

FILING DATE: The application was filed on January 21, 1997, and amendments to the application were filed on April 24, 1997, and June 23, 1997. Applicant has agreed to file an additional amendment, the substance of which is incorporated in this notice, during the notice period.

HEARING OR NOTIFICATION OF HEARING: An order granting the application will be issued unless the SEC orders a hearing. Interested persons may request a hearing by writing to the SEC's Secretary and serving applicant with a copy of the request, personally or by mail. Hearing requests should be received by the SEC by 5:30 p.m. on September 2, 1997, and should be accompanied by proof of service on applicant, in the form of an affidavit or, for lawyers, a certificate of service. Hearing requests should state the nature of the writer's interest, the reason for the request, and the issues contested. Persons who wish to be notified of a hearing may request notification by writing to the SEC's Secretary.

ADDRESSES: Secretary, SEC, 450 Fifth Street, N.W., Washington, D.C. 20549. Applicant, One Beacon Street, Boston, Massachusetts 02108.

FOR FURTHER INFORMATION CONTACT: Deepak T. Pai, Staff Attorney, at (202) 942–0574, or Mercer E. Bullard, Branch Chief, at (202) 942–0564 (Division of Investment Management, Office of Investment Company Regulation).

SUPPLEMENTARY INFORMATION: The following is a summary of the application. The complete application may be obtained for a fee at the SEC's Public Reference Branch, 450 Fifth Street, N.W., Washington, D.C. 20549 (tel. 202–942–8090).

Applicant

FundManager Portfolios (the ''Trust''), on behalf of its current series, the FundManager Aggressive Growth Portfolio, FundManager Growth Portfolio, FundManager Growth with Income Portfolio, FundManager Bond Portfolio and FundManager Managed Total Return Portfolio (the ''Current Portfolios''), and any series of the Trust created in the future (together with the Current Portfolios, the ''Portfolios'').

Applicant's Representations

1. The Trust is a registered, open-end management investment company organized in 1995 as a Delaware business trust. The Trust currently consists of five diversified series with differing investment objectives.[1] Prior to February, 1995, the Current Portfolios were series of the Republic Funds, which is also an open-end management investment company. Prior to April, 1987, the Current Portfolios were series of two separate investment companies, FundVest and FundTrust Tax Free Trust. The Current Portfolios have been in existence either as series of the Trust, the Republic Funds, or their predecessors for more than 10 years (except for the Managed Total Return Portfolio which was established in 1988) and have operated pursuant to section 12(d)(1)(F) of the Act since their inception. Freedom Capital Management Corporation (the ''Adviser''), through its M.D. Hirsch Division, acts as investment adviser to the Trust. For the fiscal year ended September 30, 1996, each of the Current Portfolios paid the Adviser a fee at the annual rate of 0.50% of net assets.

2. Each Portfolio will be designed to provide investors with a practical, cost-efficient means of investing in a diversified pool of investment companies' securities. Each Portfolio will invest in shares of other registered investment companies or series thereof (the ''Underlying Funds''). Each Portfolio will seek to achieve its investment objective by investing in approximately ten to fifteen Underlying Funds, although it may invest up to 25% of its total assets in any one Underlying Fund. Each of the Underlying Funds will be unaffiliated with the Portfolios and will be registered as an investment company.

3. Each Portfolio will invest in both load and no-load Underlying Funds. With respect to load funds, a Portfolio will purchase such shares pursuant to (a) letters of intent, permitting the Portfolio to pay reduced sales charges by aggregating its intended purchase over time; (b) rights of accumulation, permitting the Portfolio to pay reduced sales charges as it purchases additional shares of an Underlying Fund; and (c) the right to pay reduced sales charges by aggregating its purchases of several Underlying Funds within a family of Underlying Funds. Utilizing these techniques, the majority of the Underlying Fund shares purchased by the Current Portfolios during the past two years have been purchased without any sales load.

4. Each of the Current Portfolios offers two classes of shares, the Financial Adviser Class shares and the No-Load Class shares, except for the Managed Total Return Portfolio, which offers only Financial Adviser Class shares. Currently, no sales or service charge is imposed on the No-Load Class shares. The only sales or service charges imposed on the Financial Adviser Class shares are (1) distribution fees pursuant to rule 12b–1 under the Act of up to .50% and (2) fees to service organizations of up to .25% for administrative services provided to Financial Adviser Class shareholders. Applicant requests relief from the sales load restriction of section 12(d)(1)(F)(ii) to permit each Portfolio to offer its shares with a sales load in excess of 1.5%. Applicant will comply with all other provisions of section 12(d)(1)(F).

[1] The Current Portfolios presently invest in shares of open-end investment companies. Applicant expects to add an additional series, the International Portfolio, which will invest in shares of registered closed-end investment companies and unit investment trusts as well as shares of registered open-end investment companies. As of the date of applicant's last amended application, the shares of this Portfolio were not being offered to the public.

Applicant's Legal Analysis

1. Section 12(d)(1)(A) of the Act provides that no registered investment company may acquire securities of another investment company if such securities represent more than 3% of the acquired company's outstanding voting stock, more than 5% of the acquiring company's total assets, or if such securities, together with the securities of any other acquired investment companies, represent more than 10% of the acquiring company's total assets.

2. Section 12(d)(1)(F) of the Act provides that section 12(d)(1) does not apply to securities purchased or otherwise acquired by a registered investment company if immediately after the purchase or acquisition not more than 3% of the total outstanding stock of the acquired company is owned by the acquiring company and its affiliated persons and the acquiring company does not impose a sales load on its shares of more than 1.5%. In addition, no acquired company may be obligated to honor any acquiring company's redemption request in excess of 1% of the acquired company's securities during any period of less than 30 days. The acquiring company also must vote its acquired company shares either in accordance with instructions from the acquiring company's shareholders or in the same proportion as all other shareholders of the acquired company.

3. Section 12(d)(1)(J) provides that the SEC may exempt any series of transactions from any provision of section 12(d)(1) of the Act if and to the extent that such exemption is consistent with the public interest and the protection of investors. Applicant believes that the requested relief meets the standards set forth in section 12(d)(1)(J).

4. Applicant asserts that section 12(d)(1) is intended to mitigate or eliminate actual or potential abuses that might arise when one investment company acquires shares of another investment company, including the excessive layering of sales charges. Applicant believes that its proposal does not present any danger of excessive sales loads. If a Portfolio determines to invest in shares of an Underlying Fund that bears sales charges or service fees, applicant states that the aggregate sales charges or service fees will not exceed the limits set forth in rule 2830(d) of the Conduct Rules of the National Association of Securities Dealers (''NASD''). Applicant believes that it is appropriate to apply the limits on sales charges and service fees by the NASD's rules to the proposed arrangement in place of the sales load limitation in section 12(d)(1)(F). Further, as discussed above, applicant states that the Portfolios intend to structure their purchases of Underlying Funds so as to purchase most, if not all, of the Underlying Funds without incurring sales charges.

5. Applicant states that each Portfolio provides investors with the opportunity to participate in a professionally selected, diversified portfolio of investment company shares in one package and at one sales load. Applicant contends that, for many smaller investors, a packaged product may be less expensive than direct acquisition and maintenance of a comparable portfolio. Applicant submits that the convenience (such as ease of acquisition and sale), diversification, professional management, and selection of securities justify any administrative costs associated with creating such a Portfolio. Applicant also submits that Underlying Funds will benefit from the additional economies of scale resulting from the sale of a large number of shares to a Portfolio, because each Portfolio will be carried on the books as a single shareholder account.

Applicant's Conditions

Applicant agrees that the order granting the requested relief will be subject to the following conditions:

1. Any sales charges or service fees charged with respect to a class of shares of a Portfolio, when aggregated with any sales charges or service fees paid by the Portfolio with respect to securities of the Underlying Funds held by the Portfolio, will not exceed the limits set forth in rule 2830(d) of the NASD's Conduct Rules.

2. Each Portfolio will comply with section 12(d)(1)(F) in all respects except for sales load limitation of section 12(d)(1)(F)(ii).

For the Commission, by the Division of Investment Management, pursuant to delegated authority.

Margaret H. McFarland,

Deputy Secretary.

[FR Doc. 97–21365 Filed 8–12–97; 8:45 am]

BILLING CODE 8010–01–M

SECURITIES AND EXCHANGE COMMISSION

Issuer Delisting; Notice of Application to Withdraw From Listing and Registration; (Grove Property Trust, Common Stock, $.01 Par Value) File No. 1–13080

August 7, 1997.

Grove Property Trust (''Company'') has filed an application with the Securities and Exchange Commission (''Commission''), pursuant to Section 12(d) of the Securities Exchange Act of 1934 (''Act'') and Rule 12d2–2(d) promulgated thereunder, to withdraw the above specified security (''Security'') from listing and registration on the Boston Stock Exchange, Inc. (''BSE'' or ''Exchange'').

The reasons cited in the application for withdrawing the Security from listing and registration include the following:

According to the Company, the Security is also listed on the American Stock Exchange, Inc. (''Amex'') effective May 23, 1997.

The Company has complied with the requirements of the BSE by filing with the Exchange a certified copy of preambles and resolutions adopted by the Company's Board of Directors authorizing the withdrawal of its Security from listing on the BSE and by setting forth in detail to the Exchange the reasons for such proposed withdrawal, and the facts in support thereof.

In making the decision to withdraw its Security from listing on the BSE, the Company considered the direct and indirect costs and expenses associated with maintaining the dual listing of its Security on the BSE and the Amex. The Company does not see any particular advantage in the dual trading of its securities and believes that dual listing may fragment the market for its securities.

Any interested person may, on or before August 28, 1997, submit by letter to the Secretary of the Securities and Exchange Commission, 450 Fifth Street, N.W., Washington, D.C. 20549, facts bearing upon whether the application has been made in accordance with the rules of the exchanges and what terms, if any, should be imposed by the Commission for the protection of investors. The Commission, based on the information submitted to it, will issue an order granting the application after the date mentioned above, unless the Commission determines to order a hearing on the matter.

For the Commission, by the Division of Market Regulation, pursuant to delegated authority.

Jonathan G. Katz,

Secretary.

[FR Doc. 97–21366 Filed 8–12–97; 8:45 am]

BILLING CODE 8010–01–M

SECURITIES AND EXCHANGE COMMISSION

[Release No. 34–38908; File No. SR–NASD–97–28]

Self-Regulatory Organizations; National Association of Securities Dealers, Inc.; Order Approving Proposed Rule Change and Amendment No. 1 to the Proposed Rule Change, Order Granting Accelerated Approval of Amendment No. 2 to the Proposed Rule Change, and Notice of Filing and Order Granting Accelerated Approval of Amendment Nos. 3, 4, and 5 to Proposed Rule Change Regarding Membership Application Procedures, Disciplinary Proceedings, Investigations and Sanctions Procedures, and Other Conforming Changes

August 7, 1997.

On April 18, 1997, the National Association of Securities Dealers, Inc. (''NASD'' or ''Association'') filed with the Securities and Exchange Commission (''Commission'' or ''SEC'') a proposed rule change pursuant to Section 19(b)(1) of the Securities Exchange Act of 1934 (''Act'')[1], and Rule 19b-4 thereunder.[2] The Association originally proposed to amend: (1) The By-Laws of the NASD; (2) the By-Laws of NASD Regulation, Inc. (''NASD Regulation'' or ''NASDR''); (3) the By-Laws of The Nasdaq Stock Market, Inc. (''Nasdaq''); (4) the Plan of Allocation and Delegation of Functions By NASD to Subsidiaries (''Delegation Plan''); (5) Rule 0120; (6) Rule IM–2210–4; (7) the Rule 1010 Series; (8) the Rule 8000 Series; and (9) the Rule 9000 Series.

On April 23, 1997, the NASD filed a technical amendment to the proposed rule change.[3] Notice of the proposed rule change, including Amendment No. 1, was provided by issuance of a Commission release on April 24, 1997 and by publication in the **Federal Register** on May 8, 1997.[4] On July 10, 1997, the NASD filed Amendment No. 2, pertaining to changes to the 9400 Series (Members Experiencing Financial or Operational Difficulties), the 9500 Series (Summary and Non-Summary Suspensions, Cancellation, Bar, and Limitation or Prohibition on Access to NASD Services), and the 9600 Series (Procedures for Exemptions from Certain NASD Rules). Notice of Amendment No. 2 to the proposed rule change was provided by issuance of a Commission release on July 11, 1997 and by publication in the **Federal Register** on July 16, 1997.[5] On July 11, 1997, the NASD filed Amendment No. 3 to the proposed rule change, making several clarifying changes to the investigations and sanctions, disciplinary, and member admission procedures.[6] Amendment No. 3 also withdrew the proposed amendments to the by-laws of the NASD, NASD Regulation, and Nasdaq, as well as proposed amendments to these entities' restated Certificates of Incorporation and the Delegation Plan. These documents will be amended to reflect the corporate restructuring recently approved by the NASD Board of Governors and will be submitted in a separate rule filing at a later date. On July 21, 1997, the NASD filed Amendment No. 4 to the proposed rule change making several technical, nonsubstantive amendments.[7] On August 4, 1997, the NASD filed Amendment No. 5 to the proposed rule change, which modified the timing of the effectiveness of the proposed rule change and included several technical amendments.[8] The Commission received two comment letters on the proposal.[9]

I. Introduction and Background

On August 8, 1996, the Commission issued an order (''SEC Order'') pursuant to Section 19(h)(1) of the Act. This order made certain findings about the NASD and conduct on Nasdaq and imposed remedial sanctions, including ordering the NASD to comply with certain undertakings (''Undertakings'').[10] The Commission determined that the NASD had not complied with the NASD's rules or satisfied its obligations under the Act to enforce its rules and the federal securities laws. In particular, the Commission determined that the NASD failed to thoroughly investigate certain misconduct by dealers and to take effective regulatory action. Moreover, the Commission determined that the NASD failed to enforce market makers' obligations to trade at their quotations, and report transactions on a timely and accurate basis. The Commission also determined that the NASD processed applications for membership of certain firms in a manner inconsistent with its rules.

In addition, the Commission found in its 21(a) Report, among other things, that market making firms were afforded a disproportionate representation on the boards and committees that govern the NASD, administer its disciplinary process, and operate the Nasdaq market. The Commission concluded in the 21(a) Report that market makers had unduly exerted their influence over the disciplinary process through their participation in the District Business Conduct Committees (''DBCCs'').[11] In

[1] 15 U.S.C. § 78s(b)(1).

[2] 17 CFR 240.19b–4.

[3] Letter from Alden S. Adkins, General Counsel, NASD Regulation, Inc. to Katherine A. England, Assistant Director, Division of Market Regulation, Commission, dated April 23, 1997 (''Amendment No. 1'').

[4] Securities Exchange Act Release No. 38545 (Apr. 24, 1997), 62 FR 25226 (May 8, 1997) (publishing notice of SR–NASD–97–28) (''Original Proposal'').

[5] Securities Exchange Act Release No. 38831 (July 11, 1997), 62 FR 38156 (July 16, 1997) (''Amendment No. 2'').

[6] Letter from Alden S. Adkins, General Counsel, NASD Regulation, to Katherine A. England, Assistant Director, Division of Market Regulation, Commission, dated July 11, 1997 (''Amendment No. 3''). Except for technical, clarifying changes, a description of the proposed changes set forth in Amendment No. 3 regarding the investigations and sanctions, disciplinary, and member admission procedures is provided below. In addition to the NASD's proposed changes to the Original Proposal, the NASD included in Amendment No. 3 its response to the two submitted comment letters (''NASD Response''). *See also* Colish Letter and ABA Letter, *infra* note 9.

[7] Letter from Alden S. Adkins, General Counsel, NASD Regulation, Inc. to Katherine A. England, Assistant Director, Division of Market Regulation, Commission, dated July 21, 1997 (''Amendment No. 4'').

[8] Letter from Alden S. Adkins, General Counsel, NASD Regulation, Inc. to Katherine A. England, Assistant Director, Division of Market Regulation, Commission, dated August 4, 1997 (''Amendment No. 5''). Certain minor modifications to the Delegation Plan needed to ensure conformity to the changes in the rules of the NASD contained in this rule filing are set forth in Amendment No. 5 to SR–NASD–96–29, which is being temporarily approved concurrently with this filing. Securities Exchange Act Release No. 38909 (Aug. 7, 1997).

[9] Letter from Faith Colish, Attorney, Faith Colish P.C., to Jonathan G. Katz, Secretary, Commission, dated June 9, 1997 (''Colish Letter''); letter from George S. Frazza, Chair, Section of Business Law and Barry F. McNeil, Chair, Section of Litigation, American Bar Association, to Jonathan G. Katz, Secretary, Commission, dated June 17, 1997 (''ABA Letter'').

[10] Securities Exchange Act Release No. 37538 (Aug. 8, 1996), SEC's Order Instituting Public Proceedings Pursuant to Section 19(h)(1) of the Securities Exchange Act of 1934, Making Findings and Imposing Remedial Sanctions, *In the Matter of National Association of Securities Dealers, Inc.*, Administrative Proceeding File No. 3–9056. SEC, Report and Appendix to Report Pursuant to Section 21(a) of the Securities Exchange Act of 1934 Regarding the NASD and The Nasdaq Stock Market (Aug. 8, 1996) (''21(a) Report'').

[11] The Commission found that the DBCCs performed a ''grand jury'' function, in which the NASD staff were required to seek DBCC authorization to initiate a disciplinary proceeding.

Continued

addition, the Commission noted that ''undue influence of market makers and a lack of vigor and balance in the NASD's enforcement activities with respect to market maker firms'' was inconsistent with the NASD's statutory obligation [12] to oversee the Nasdaq market and to enforce its rules and regulations fairly as to all member firms.[13]

Further, the Commission found that the NASD processed applications for membership of certain firms in a manner inconsistent with its rules.[14] Specifically, the Commission found that the NASD failed to process certain applications within a reasonable time, required some applicants to satisfy criteria not enumerated in its rules, placed improper restrictions on those firms' activities as a condition to membership, and prevented such members, once admitted, from seeking modifications to their restriction agreements as permitted by the NASD's rules.

Based on the Commission's specific findings, the NASD agreed to certain undertakings, including, among other things, undertakings to improve public representation on its Boards and committees, to institute professional hearing officers, to confer sole discretion in the regulatory staff of the NASD as to prosecutorial and regulatory matters, and to promulgate and apply uniform standards for regulatory and other access issues.[15] Under the general terms of certain of the Undertakings in the SEC Order, and in response to the Commission's conclusions in the 21(a) Report, the NASD is proposing to amend its Code of Procedure and Membership Application and Registration Procedures.

II. Description of the Proposal

The proposed changes to the NASD's membership and registration rules, investigations and sanctions rules, and the code of procedure are summarized below in the order that they appear in the rules.[16]

A. Changes to the Membership and Registration Rules

The Rule 1010 Series governs the procedures for becoming a member of the NASD. The proposed changes to the Rule 1010 Series will substantially alter the current procedures for membership application. The proposed Rule 1010 Series provides that NASD Regulation staff, rather than a District Committee, will make an initial decision on an application for membership. An applicant may appeal a staff decision to the National Business Conduct Committee (''NBCC''). The NBCC's decision is subject to discretionary review by both the NASD Regulation Board and the NASD Board. The proposed rule change also sets forth a more detailed and comprehensive list of the documents and information that must be submitted with a membership application and sets forth more detailed, comprehensive, and objective standards to be used to determine whether an applicant should be admitted to membership. The proposed rule change provides more procedural rights to applicants to ensure that applications are processed fairly and expeditiously, including limitations on the time within which the NASD must issue membership decisions.

B. Changes to the Investigations and Sanctions Rules

The Rule 8100 Series currently governs complaints against NASD members. The Rule 8200 Series permits the NASD to investigate members' books, and requires members or associated persons to provide information in connection with investigations or proceedings conducted by the NASD. The Rule 8200 Series also currently provides the NASD with authority to suspend members or associated persons who do not comply with the Rule 8200 Series. The Rule 8300 Series currently provides for sanctions against members and persons associated with members for violations of NASD rules.

The NASD proposes to amend the Rule 8000 Series to reflect the proposed changes to the disciplinary procedures in the proposed Rule 9000 Series, discussed below, and to clarify and reorganize certain rule provisions in order to make them easier to read and understand. Currently, the decision to serve a complaint on a member pursuant to Rule 8130 is made by the NBCC. In addition, current Rule 8120 allows any person who believes he or she has been aggrieved by any act of any member or associated person to institute a formal disciplinary proceeding.

The NASD proposes to rescind current Rule 8120. The NASD believes it is no longer necessary to give ''aggrieved persons'' the right to invoke NASD processes to institute formal

---

In addition, the DBCCs served as adjudicative bodies, ruling on disciplinary proceedings and approving settlements. 21(a) Report, *supra* note 10, at 35 n.91. As examples of the DBCCs' undue influence over the disciplinary process, the Commission pointed to heightened enforcement efforts regarding Small Order Execution System violations and the NASD's laxity in enforcing firm quote obligations, trade reporting rules, and excused withdrawal rules. *Id.* at 36–39.

[12] Section 19(g)(1)(B) of the Act, 15 U.S.C. § 78s(g)(1)(B).

[13] 21(a) Report, *supra* note 10, at 39.

[14] SEC Order, *supra* note 10.

[15] Undertakings one through six of the SEC Order require the Association:

1. To implement and maintain at least fifty percent independent public and non-industry membership in its Board of Governors, the Board(s) of Governors or Directors of all of its subsidiaries and affiliates that exercise or have delegated self-regulatory functions, and the following committees: the National Nominating Committee, the Trading/Quality of Markets Committee, the Arbitration Committee, the Market Surveillance Committee (now the Market Regulation Committee), the National Business Conduct Committee, the Management Compensation Committee, and all successors thereto.

2. To provide that NASDR and any successor thereto has, consistent with the NASD's By-Laws and Plan of Delegation, as amended from time to time and as approved by the Commission, primary day-to-day responsibility for the regulation, surveillance, examination, and disciplining of NASD member firms and registered persons, with respect to market activities as well as other self-regulatory matters, with full access to the records of the Nasdaq market.

3. To institute the participation of professional Hearing Officers (who shall be attorneys with appropriate experience and training) to preside over disciplinary proceedings.

4. To provide for the autonomy and independence of the regulatory staff of the NASD and its subsidiaries such that the staff, subject only to the supervision of the Board of Governors of the NASD and the Boards of Directors of NASDR and Nasdaq, and any successor thereto, (a) has sole discretion as to what matters to investigate and prosecute, (b) has sole discretion to handle regulatory matters such as approval of applications for membership and the conditions and limitations that may be placed thereon, (c) prepares rule proposals, rule interpretations and other policy matters with any consultations with interested NASD constituencies made in fair and evenhanded manner, and (d) is generally insulated from the commercial interests of its members and the Nasdaq market. Among other things, the District Business Conduct Committees and the Market Surveillance Committee shall not have any involvement in deciding whether or not to institute disciplinary proceedings, nor shall the District Committees, or any subcommittee thereof, have any involvement in the review or approval of applications for membership in the NASD. Subject to the foregoing, the regulatory staff of the NASDR engaged in the disciplinary process may, solely on their own initiative, inform themselves on matters of market or other securities industry expertise by consulting with representatives of member firms or committees of the NASD or its subsidiaries.

5. To promulgate and apply on a consistent basis uniform standards for regulatory and other access issues, such as admission to the NASD as a member firm, and conditions to becoming a market maker; and institute safeguards to ensure fair and evenhanded access to all services and facilities of the NASD.

6. To ensure the existence of a substantial, independent internal audit staff which reviews all aspects of the NASD (including the regulatory function, the disciplinary process and the Nasdaq stock market and its systems) and reports directly to an audit committee of the NASD Board of Governors which includes a majority of public and non-industry Governors and is chaired by a public Governor.

[16] For a more detailed description of the NASD's proposed rule change, *see* Original Proposal, *supra* note 4; Amendment No. 2, *supra* note 5; Amendment No. 3, *supra* note 6; Amendment No. 4, *supra* note 7; and Amendment No. 5, *supra* note 8.

disciplinary actions in view of the enhancements to the disciplinary process, including the change to staff-initiated disciplinary proceedings, enhancements to the arbitration process, and the institution of an expanded and independent NASD internal review function (including an Ombudsman Office). The NASD also proposes to delete current Rule 8130, which authorizes the DBCCs to file complaints, to comply with Undertaking 4, which prohibits DBCCs from having any involvement in the decision whether or not to institute disciplinary proceedings.

The NASD proposes significant changes to current Rule 8220, which authorizes the suspension of a member for failure to furnish the NASD with duly requested information or for failure to keep a membership application and supporting documents current. The proposed changes retain the NASD's summary suspension powers, but provide members and persons associated with members with enhanced procedural protections in connection with the suspension process. Under the proposed revisions to Rule 8221, the NBCC must provide written notice of the suspension to the member or associated person. The notice specifies the information that must be provided or the action that must be taken, and states that the failure to provide information or take the required action within 20 days after service of the notice constitutes grounds for suspension. The NBCC must serve notice of the suspension through personal service or commercial courier.

Proposed Rule 8222 makes explicit the right of a member or associated person to request a hearing before a subcommittee of the NBCC concerning the notice of suspension. Any subcommittee decision to impose a suspension must state the grounds for the suspension and the conditions for terminating it. Proposed Rule 8224 requires the NASD to provide to the entire NASD membership notice of any suspension imposed pursuant to Rule 8223, and proposed Rule 8226 requires that the NASD also serve the suspended member with a copy of a notice or decision served on the associated person.

Proposed Rule 8225 adds a new provision for termination of the suspension. Upon request by the suspended member or associated person, the head of the appropriate NASD Regulation department or office may terminate a suspension if the member or associated person has fully complied with a notice or decision issued under the Rule 8220 Series. If the request is denied, the proposed rule provides the member or associated person with the right to apply to the NBCC for relief from the suspension on the grounds of full compliance with the notice issued under proposed Rule 8221 or the conditions specified in a decision issued under proposed Rule 8223.

Proposed Rule 8227 clarifies that any action taken under the Rule 8220 Series does not foreclose the NASD from taking action against the member or associated person under any other rule. Finally, the NASD also proposes to amend the Rule 8300 Series to make it conform with the proposed Rule 9000 Series and to make it shorter, clearer, and easier to understand.

C. Changes to the Code of Procedure

The NASD proposes numerous changes to the Code of Procedure. In particular, the Rule 9100 Series sets forth rules of general applicability to disciplinary proceedings and other proceedings brought against a member or a person associated with a member. The Rule 9200 Series sets forth the specific procedures for disciplinary proceedings, including settlements, letters of acceptance, waiver, and consent and minor rule plan violation letters, and the Rule 9300 Series sets forth the appeal or review procedures for a disciplinary proceeding. The Rule 9400 and 9500 Series set forth the procedures regarding members experiencing financial or operating difficulties; summary and nonsummary suspensions, cancellation, bar, and limitation or prohibition on access to NASD services; and eligibility proceedings. The Rule 9600 Series delineates the procedures for exemptions from certain NASD Rules.

1. Application and Purpose

The proposed Rule 9100 Series contains twenty proposed rules, setting forth a variety of important procedural modifications, including a detailed list of defined terms used throughout the Code of Procedure (proposed Rule 9120);[17] a series of rules regarding service[18] and notice of various papers and filing requirements (proposed Rule 9130 Series); rules relating to the appearance of counsel (or other person authorized to act in a representative capacity) (proposed Rules 9141, 9142, 9150); a detailed provision prohibiting *ex parte* communications generally (proposed Rule 9143) and a related provision regarding separation of functions (proposed Rule 9144); a rule providing for a motions practice (proposed Rule 9146); a provision for disqualification of an adjudicator (proposed Rule 9160);[19] and a provision prohibiting interlocutory review (proposed Rule 9148).

2. Disciplinary Proceedings

The proposed Rule 9200 Series contains thirty proposed rules. Under these rules, the roles of the District Committee and Market Regulation Committee are greatly reduced. Neither may initiate a complaint; instead, the Department of Enforcement may investigate a case and file a complaint to initiate a disciplinary proceeding (proposed Rule 9211(a)). Further, NASD Regulation has established an Office of Hearing Officers as an independent office within NASD Regulation. The Office of Hearing Officers is headed by the chief hearing officer, who is an executive vice president and reports directly to the president of NASD Regulation. The purpose of the Office of Hearing Officers is to provide a group of independent and professional hearing officers (comprised of attorneys with

[17] In Amendment No. 3, the NASD proposes to amend, add, and delete several terms set forth in proposed Rule 9120. First, unnecessary terms such as ''Practicing before the NASD'' and ''Complainant'' (because the only possible complainant is the Department of Enforcement) were deleted. A related change was made to the definition of ''Party'' now in proposed Rule 9120(v). Two new definitions were added. In proposed Rule 9120(d), ''Counsel to the National Business Conduct Committee'' was added to provide greater clarity with respect to the other proposed changes to the Rule 9300 Series described below. In proposed Rule 9120(l), ''General Counsel'' was defined in order to shorten several references in the text to ''the General Counsel of NASD Regulation, or his or her delegatee,'' and to make explicit that the delegation by the General Counsel would extend only to certain persons directly reporting to the General Counsel with certain titles and/or responsibilities (*e.g.*, an Associate General Counsel or an Assistant General Counsel). In addition, minor changes were also made to the definitions of ''Adjudicator,'' ''District Committee,'' ''Extended Hearing Panel,'' ''Extended Proceeding Committee,'' ''Hearing Panel,'' ''Interested Association Staff,'' ''Statutory Disqualification Committee,'' and ''Subcommittee,'' found, respectively, in proposed Rule 9120 (a), (f), (i), (k), (p), (q), (y), and (z). Some of these changes were made to conform the definitions to the proposed Rule 9400 Series and the proposed Rule 9500 Series. Amendment No. 3, *supra* note 6.

[18] In Amendment No. 3, the NASD proposes to amend proposed Rule 9134(b)(2) so that service on an entity may be made by service on the contact person listed on the member's Form BD in addition to those persons already listed in the rule.

[19] The term ''Adjudicator'' means: (1) A body, board, committee, group, or natural person that presides over a proceeding and renders a decision; (2) a body, board, committee, group, or natural person that presides over a proceeding and renders a recommended or proposed decision which is acted upon by an adjudicator described in (1); or, (3) a natural person who serves on a body, board, committee, or group described in (1) or (2). The term includes a ''Subcommittee'' as defined in paragraph (z), an ''Extended Proceeding Committee'' as defined in paragraph (k), and a ''Statutory Disqualification Committee'' as defined in paragraph (y) (proposed Rule 9120(a)).

appropriate experience and training) to preside over all formal NASD disciplinary proceedings.

Hearing panels or, if applicable, extended hearing panels,[20] are selected by a chief hearing officer, and are composed of a hearing officer (a professional NASD Regulation staff member) and two panelists, each selected from the securities industry and drawn from a pool of persons associated with a member or retired therefrom and who: (1) Currently serve or previously served on a District Committee; (2) previously served on the National Business Conduct Committee; (3) previously served on a disciplinary subcommittee of the National Business Conduct Committee, including a subcommittee, an extended proceeding committee, or their predecessor subcommittees; or (4) previously served as a director of NASD Regulation, a director of the Nasdaq Board of Directors, or a Governor of the NASD, but who do not serve currently in any of these positions.[21] In addition, a person who currently serves on the Market Regulation Committee (or who previously served on the Market Regulation Committee not earlier than four years before the date the complaint was served upon the respondent)[22] and who is associated with an NASD member or retired therefrom may be chosen by the chief hearing officer to serve as *one* of the panelists on a hearing panel or an extended hearing panel when the chief hearing officer determines that the complaint alleges at least one cause of action involving a violation of a statute or a rule within the scope of proposed Rule 9120(r).[23] The hearing panel, or, if applicable, the extended hearing panel, issues the ''trial level'' decision in a disciplinary proceeding (proposed Rule 9268).

The NASD also proposes a number of procedural enhancements to the disciplinary procedures. Proposed Rule 9215(c) provides for the filing of a motion for a more definite statement (in addition to proposed Rule 9146, providing for the filing of motions generally), proposed Rule 9221 allows a hearing officer or a hearing panel to order a hearing if the adjudicator determines a hearing is necessary, notwithstanding that respondents have waived their rights to a hearing, and proposed Rules 9233 and 9234 set forth detailed disqualification provisions.

The proposed Rule 9240 Series and proposed Rule 9250 Series set forth requirements that parties participate in pre-hearing conferences, and exchange, before a hearing on the merits, documentary evidence, a list of witnesses and expert witnesses, and an outline of the case or defense. The same proposed rules also provide that the Department of Enforcement must provide documents to a respondent, and set forth procedures for doing so. Sanctions for not complying with requirements regarding the production of documents, other provisions of the Rule 9200 Series, or an order of an adjudicator in the Rule 9200 Series, or for other contemptuous conduct, are set forth in proposed Rule 9280.[24]

Under proposed Rule 9262, a witness subject to the jurisdiction of the NASD is required to testify under oath or affirmation. Proposed Rule 9264 sets forth the rules allowing a party to file a motion for summary disposition.

In the post-hearing time frame, under proposed Rule 9266, a hearing officer may require a party to file proposed findings of fact, conclusions of law, and post-hearing briefs. The hearing officer prepares a decision representing the majority of the hearing panel or, if applicable, the extended hearing panel, under proposed Rule 9268. Proposed Rule 9268(c) allows a panelist or a hearing officer to write a dissenting opinion. Finally, under proposed Rule 9270, the NASD proposes to modify existing settlement procedures to provide specific procedures for a respondent to execute an offer of settlement prior to a determination on the merits.

3. Appeals and Reviews of Disciplinary Proceedings

In the current and proposed Rule 9300 Series, procedures are set forth for the appeal of a case by a party or the review of a case by the National Business Conduct Committee, the NASD Regulation Board and the NASD Board. The proposed Rule 9300 Series contains nineteen proposed rules. In the proposed Rule 9300 Series, changes include the right of the Department of Enforcement to appeal a disciplinary proceeding decision issued by a hearing panel or, if applicable, an extended hearing panel (proposed Rule 9311(a));[25] the requirement that persons subject to the jurisdiction of the NASD testify under oath or affirmation (proposed Rule 9346(h)); and the requirement that members of the NASD Regulation Board or the NASD Board shall have a specific period of time to review a disciplinary proceeding decision in order to determine whether to call a case for discretionary review by such board (proposed Rules 9351 and 9352). Proposed Rule 9360 provides that a sanction imposed in a final disciplinary action of the NASD becomes effective not earlier than thirty days after the date of service of the decision. In a proposed change designed to reflect current practice, proposed Rule 9370 provides that, in most cases, sanctions, other than a bar or expulsion, are stayed when a person files with the Commission a request for review of a final disciplinary action of the NASD.

[20] The chief hearing officer appoints an extended hearing panel if upon consideration of the complexity of the issues involved, the probable length of the hearing, or other factors, the chief hearing officer determines that a matter shall be an extended hearing (proposed Rule 9120(i) and proposed Rule 9120(h)). Designation of a matter as an extended hearing provides the chief hearing officer the ability to select, among other potential panelists, persons who are retired and may have both time and relevant experience to bring to an extended hearing (proposed Rule 9231(c)).

[21] Amendment No. 3, *supra* note 6. In previously proposed Rule 9231, most but not all former members of a District Committee were eligible to serve as a panelist on either a hearing panel or an extended hearing panel; now all former District Committee members are eligible. In addition, recently retired persons who were previously associated with the securities industry were not eligible to serve on hearing panels but were eligible to serve on extended hearing panels. In Amendment No. 3, among other things, retired persons may serve on both types of panels, and persons who have been retired for more than four years remain eligible to serve as panelists. *Id*.

[22] The NASD states that the period of four years was incorporated to define more clearly who is properly classified as a Market Regulation Committee panelist. This is important because the Code provides that only one Market Regulation Committee panelist may be appointed to serve on a hearing panel or an extended hearing panel. Amendment No. 3, *supra* note 6.

[23] Proposed Rule 9120(r) (formerly proposed Rule 9120(q)) states that the term ''Market Regulation Committee'' means the committee of NASD Regulation designated to consider the federal securities laws and the rules and regulations adopted thereunder and various rules of the NASD and policies relating to:

(1) the quotations of securities;

(2) the execution of transactions;

(3) the reporting of transactions; and

(4) trading practices, including rules prohibiting manipulation and insider trading, and those Rules designated as Trading Rules (Rule 3300 Series), the Nasdaq Stock Market Rules (Rule 4000 Series), other Nasdaq and NASD Market Rules (Rule 5000 Series), NASD Systems and Programs Rules (Rule 6000 Series), and Charges for Services and Equipment Rules (Rule 7000 Series).

[24] In proposed Rule 9280(b)(2), the NASD added an explicit reference to the Rule 9240 Series because the NASD believes that the parties' cooperation and timely disclosure of information in the proposed Rule 9240 Series is of equal importance to their obligations under the proposed Rule 9250 Series. Amendment No. 3, *supra* note 6.

[25] To provide the parties more time to file an appeal, the NASD proposes to amend Rule 9311(a) to extend from 15 days to 25 days the time for noticing an appeal. The NASD states that this conforms to the rules of the New York Stock Exchange and parallels a provision in the Rule 1010 Series. The NASD also amended proposed Rule 9311 to provide parties with prior notice and an opportunity to brief an issue that was previously waived if that issue arises and will be considered by the NBCC. Amendment No. 3, *supra* note 6.

In Amendment No. 3 to the proposed rule change, the NASD added proposed Rule 9313, authorizing a counsel to the NBCC to perform various ministerial and administrative acts on behalf of the NBCC during the course of an appeal or review. Because the role of the counsel to the NBCC is purely administrative, counsel may not shorten any period, postpone or adjourn a hearing, or otherwise limit a right previously held by a party, without the consent of all of the parties to the disciplinary proceeding.[26]

4. Members Experiencing Financial or Operating Difficulties; Summary and Non-Summary Suspensions Cancellation, Bar, and Limitation or Prohibition on Access to NASD Services; and Eligibility Proceedings

The NASD proposes to renumber, consolidate, reorganize, and clarify the procedures proposed for the Rule 9400 and 9500 Series. In the Original Proposal, the NASD requested temporary approval for five separate procedures for: (1) Regulating the activities of members experiencing financial or operating difficulty; (2) approving a change in business operations that will result in a change in exemptive status under SEC Rule 15c3–3 under the Act; (3) summary suspension as authorized by Section 15A(h)(3) of the Act; (4) non-summary suspension, cancellation, and bar; and (5) eligibility proceedings. Also in the Original Proposal, the NASD proposed eliminating the current expedited remedial proceedings.[27] The NASD stated that it would comprehensively review the proposed Rule 9400 and 9500 Series, as submitted in the Original Proposal, and would consider submitting a revision to the Original Proposal based on that review.

As a result of its review of the Rule 9400 and 9500 Series, the NASD submitted Amendment No. 2 to amend the Original Proposal to reduce the number of separate proceedings from five to three, and to seek permanent approval of these three procedures.[28] First, the NASD proposes that the current Rule 9510 Series, setting forth procedures for limitations on operations for firms experiencing financial or operational difficulties as specified in Rules 3130 and 3131, remain as a separate rule, and be renumbered as the Rule 9410 Series.[29]

Second, the NASD proposes that the current Rule 9350 Series, setting forth procedures for a member wishing to change its exemptive status under SEC Rule 15c3–3, be eliminated. Under the proposed rules, a member wishing to change its exemptive status must apply for a change to its membership agreement, if the membership agreement covers the member's exemptive status, or file a notice and application for approval of a material change in the member's business operations if the membership agreement does not specifically address the member's exemptive status.[30] Procedures for applying for a change to a membership agreement or for approval of a material change in business operations are now set forth in the proposed Rule 1010 Series.[31]

Third, the NASD proposes to consolidate into the revised Rule 9510 Series summary suspension proceedings,[32] non-summary suspension, cancellation, and bar proceedings,[33] and new denial of access procedures. The new denial of access procedures permit the NASD, after notice and opportunity for hearing, to deny a person access to services offered by the NASD or a member of the NASD if the NASD determines that the person does not meet the qualification requirements or other prerequisites for such access, or the person cannot be permitted to continue to have such access with safety to investors, creditors, members, or the NASD.

Finally, eligibility proceedings will remain in a separate rule series, and will be renumbered as the Rule 9520 Series.[34] The eligibility proceedings will continue to permit a person to become or remain associated with a member, notwithstanding the existence of a statutory disqualification as defined in Section 3(a)(39) of the Act. Further, the eligibility proceedings will continue to permit a current member or associated person to obtain relief from the eligibility or qualification requirements of the NASD By-Laws and Rules. Further, the revisions to the Rule 9520 Series will provide members and associated persons with enhanced procedural protections, and will conform these proceedings to the current corporate structure.

The NASD also proposes to amend the Rule 9400 and Rule 9500 Series to provide participants with enhanced procedural protections in the conduct of these proceedings and to expedite the hearing and review processes, especially under the proposed Rule 9510 Series (which governs procedures for summary and non-summary suspension, cancellation, bar, and limitation or prohibition on access to the NASD's services). Specifically, the proposal, as amended by Amendment No. 2, adds a variety of new provisions, including provisions governing: the time within which a hearing requested by a member must be held; the disclosure of documents by NASD staff to the member prior to hearing; the exchange of exhibit and witness lists; the rights of parties at a hearing; the components of a written decision (including conditions for terminating a limitation, where appropriate); the preservation of evidence proffered but not accepted into the record; and the contents of the record for each proceeding. In addition, the proposal provides for discretionary review of lower decisions by the NASD Regulation and NASD Boards that is substantially similar to the procedures governing disciplinary proceedings.

5. Procedures for Exemptions From Certain NASD Rules

The NASD proposes a new Rule 9600 Series that requires members to apply to the staff for an exemption under various rules, and provides a right of appeal to the NBCC. The NASD also proposes to provide additional rights for participants in the proceedings; conform the series to the proposed Rule 9000 Series, as well as to the current corporate structure; and delete the current Rule 9630 Series, which governs expedited remedial proceedings.

Specifically, the NASD proposes a new Rule 9600 Series that would require members to apply to NASD Regulation staff for an exemption under various rules, and would provide a right of appeal to the NBCC. Under current NASD rules, the authority to grant exemptions has been granted to various standing committees. Pursuant to the proposal, a member seeking an exemption would be required to file a written application with the Office of General Counsel of NASD Regulation. Members applying for exemptions could receive confidential treatment of applications or decisions after a showing of good cause for confidential treatment. The proposed rules provide for a right to review before a subcommittee appointed by the NBCC. The NBCC's written decision, which would constitute final action of the NASD, would be based on the matters on appeal, the subcommittee's

[26] Amendment No. 3, *supra* note 6.

[27] The NASD also stated its intent to submit a separate rule filing to amend its expedited remedial proceedings. Original Proposal, *supra* note 4.

[28] Amendment No. 2, *supra* note 5.

[29] *See* current Rule 9510 Series.

[30] *See* current Rule 9530 Series.

[31] The NASD has stated it will inform its membership of this change in procedure in a notice to members. Amendment No. 2, *supra* note 5.

[32] *See* current Rule 9610 Series.

[33] *See* current Rule 9620 Series.

[34] *See* current Rule 9640 Series.

recommendation, and the NBCC's findings and conclusions.

D. Effectiveness of the New Procedures [35]

Because the proposed rule change is effective upon approval by the Commission on the date of this release (''effective date''), the NASD proposes to establish the following schedule to address the transition from the current procedures to the proposed procedures approved in this rule filing.

1. Membership Admission Rules; Investigations and Sanctions

The Rule 1010 Series, the membership admission rules, will take effect on the effective date. Thus, if a membership application is received by the NASD before the effective date, the application will be considered under the current rules and procedures. However, if a membership application is received by the NASD on or after the effective date of the proposed Rule 1010 Series, the amended Rule 1010 Series will apply to the application process. In addition, the NASD proposes that the Rule 8000 Series will take effect on the effective date.

2. Complaints, Offers of Settlement

The proposed Rule 9100 Series through the Rule 9300 Series will generally apply to a respondent when the NASD staff first attempted service [36] of the complaint on or after the effective date. If the complaint is authorized and the first attempted service occurs prior to the effective date, a respondent will be subject to the current Code of Procedure, [37] except that if the decision is served on or after the effective date and the disciplinary proceeding is subsequently appealed to the NBCC or the NBCC calls the disciplinary proceeding for review, as described in greater detail below, the appeal or review will proceed under the proposed rules. In addition, if a respondent is negotiating an offer of settlement for a complaint authorized and attempted to be served before the effective date, and executes such offer of settlement after the effective date of this proposal, the offer of settlement will be reviewed and accepted or rejected under the current rules, rather than under proposed Rule 9270.[38] A respondent subject to the current Code of Procedure may not seek consideration of whether the complaint should have been authorized under the proposed Code.

Conversely, a respondent is subject to the proposed Code if the complaint is authorized before the effective date, but the first attempted service occurs on or after the effective date of this proposal. In a multiple respondent disciplinary proceeding, all respondents will be subject to the proposed Code of Procedure if the complaint is authorized before the effective date, but NASD staff does not make the first attempted service as to any of the named respondents until on or after the effective date. A respondent who is subject to the proposed Code because the complaint was authorized before the effective date, but the first attempted service occurred on or after the effective date, may challenge the case for improper authorization based only on the current (or old) Code. Accordingly, in such circumstances, a respondent cannot challenge the authorization of the complaint based on the fact that it was not authorized under the proposed Code. [39] In any case in which the complaint is authorized on or after the effective date of the proposed Code, the respondents will be subject to the provisions of the proposed Code.

3. AWCs and MRVs

On the effective date of the proposed Rule 9100–9300 Series, the Department of Enforcement will have the ability to accept letters regarding acceptance, waiver, or consent (''AWCs''), and minor rule violations (''MRVs''). The application of the proposed rules to AWCs and MRVs is based upon when a member or an associated person executes such letters. Thus, if a member or an associated person executes an AWC or MRV before the effective date of this proposal, the AWC or MRV will be subject to review and acceptance under the current Code of Procedure. However, if a member or an associated person is engaged in negotiations about the terms of an AWC or MRV and the effective date occurs before the AWC or MRV is executed by the member or associated person, the AWC or MRV will be subject to review and acceptance under the proposed rules.

4. Appeals and Reviews—Application of Proposed Rule 9300 Series

The NASD also proposes that the proposed Rule 9300 Series, when effective, apply to any appeal, call for review, or review of a decision rendered under Rule 9268 and Rule 9269 if the decision is: (a) served on a respondent on or after the effective date of the proposed Code of Procedure *and* (b) appealed, called for review, or reviewed. By doing so, the NASD notes that all of the new appellate and review procedural enhancements, with one exception, would apply to a completed ''trial-level'' proceeding on appeal, subject to a call for review, or reviewed on or after the effective date of the proposed Code of Procedure. The one exception would be that the right of the Department of Enforcement to appeal or cross-appeal a case would not apply. The NASD proposes that this provision in the proposed Rule 9300 Series not be applied to any disciplinary proceeding unless the disciplinary proceeding is based upon a complaint served on or after the effective date of the proposed Code because a respondent may believe that any retroactive application of this procedure may be unfair. [40]

5. A Fourteen Calendar Day ''Opt-In'' Period

In the Original Proposal, the NASD proposed that in certain cases a respondent to a disciplinary proceeding be allowed to opt in to the proposed procedures during a thirty-day period following Commission approval of the new procedure.[41] At the time the NASD proposed the opt in procedure, the NASD expected that the Commission would delay the effectiveness of the proposed Rule 9100–9300 Series for approximately thirty days. The Commission, however, will make the proposed Rule 9100–9300 Series effective on the same day that it approves such rules. The NASD continues to believe that it is appropriate or desirable to have a time period during which a respondent subject to the current Code of Procedure could opt to have the proceeding administered under the proposed (or new) Code of Procedure.[42] The NASD proposes that this time period should be fourteen calendar days. Thus, a respondent who is named in a complaint that is authorized prior to the effective date may opt to have the disciplinary proceeding go forward under the proposed Code if the first attempted service upon the respondent occurs not earlier than fourteen calendar days before the effective date of this proposal. In a disciplinary proceeding involving more than one respondent, all

[35] See Amendment No. 5, *supra* note 8.

[36] First attempted service means the complaint has been mailed by NASD staff or delivered by NASD staff to a courier for transmission by the courier.

[37] In a multiple respondent disciplinary proceeding, all respondents will be subject to the current Code of Procedure if service was attempted on any one respondent before the effective date.

[38] *Supra* note 37.

[39] Telephone conversation between John Ayanian, Special Counsel, Division of Market Regulation, Commission, and Sharon Zackula, Senior Attorney, Office of General Counsel, NASD Regulation, on August 5, 1997.

[40] Amendment No. 5, *supra* note 8.

[41] Original Proposal, *supra* note 4.

[42] Amendment No. 5, *supra* note 8.

respondents must opt to have the proceedings administered under the new Code of Procedure for it to apply. NASD staff will specifically notify all parties eligible to opt in of the existence of this right and the limitations on this right.

6. Rule 9400–9500 Series

If a proceeding is initiated before the effective date, the proceeding will be administered under the current provisions relating to the proceeding. If a proceeding is initiated on or after the effective date, the proceeding will be administered under the new rules.

7. Rule 9600 Series

If a request for an exemption has been made before the effective date, the request will be administered under the current provisions relating to such proceedings. A request for an exemption initiated on or after the effective date will be administered under the new rules.

III. Comments and NASD Responses

The Commission received two comment letters regarding the Original Proposal. The Colish Letter generally addresses issues relating to premembership application procedures set forth in the proposed Rule 1010 Series. The ABA Letter addresses proposed changes to the Rule 8000 Series and the proposed Rule 9100 Series through the Rule 9300 Series.

A. Rule 1010 Series

The Commission received one comment letter concerning the membership application procedures.[43] Overall, the commenter agrees with the proposed rules, but believes the rules could be improved or supplemented in certain respects.

1. New Member Review

The commenter recommends that the new member review process be centralized at the NASD's headquarters.[44] The commenter is concerned that the examiners in the various District Offices may lack the necessary experience and training to adequately discharge the new responsibility of approving, disapproving, or setting conditions or limits on membership applications. In addition, the commenter believes that centralization would be the best way to ensure uniformity.

The NASD does not believe centralization is necessary.[45] The NASD believes that the District Offices obtain valuable insights into the applicants' business through the new member review process. It notes that significant initiatives are already underway to train examiners for their new responsibilities and that new policies and procedures are being established to ensure national uniformity and consistency in the treatment of membership applications. For example, training sessions focusing on the proposed rules have been conducted for supervisors and assistant directors, a comprehensive training program is being finalized for District Office examiners, and a staff steering committee chaired by an NASD Regulation vice president and staffed by senior District Office staff members is finalizing detailed procedures for District Offices to follow to help ensure uniformity and consistency.

2. Monthly Projections of Income and Expenses

The commenter asserts that it may be unrealistic for some applicants to furnish a monthly projection of income and expenses for the first twelve months of operations under proposed Rule 1013(a)(2)(A)(ii).[46] She notes that this would be especially difficult for firms that intend to engage in a significant amount of dealer business.

The NASD believes this information is reasonable and necessary to facilitate the NASD's ability to determine whether an applicant has a reasonable expectation of being able to comply with the net capital rule once the applicant commences business.[47] The NASD also believes it is not overly burdensome for applicants to prepare this information because most new firms already project the revenues necessary to meet fixed and other expenses for business reasons.

3. Use of Forms BD, U–4, and U–5

The commenter maintains that the NASD should not require applicants to submit Forms BD, U–4, and U–5 because the information contained on those forms is available to the NASD through the Central Registration Depository (''CRD'').[48] The commenter does note, however, that it is not particularly onerous for applicants to include this information as part of their application materials. In any event, the commenter suggests that the NASD should request an applicant's current composite Form BD because the most recent filing may be a partial amendment.

The NASD agrees with the comment concerning the submission of an applicant's current composite Form BD. Therefore, as part of Amendment No. 3, the NASD has made technical changes to proposed Rule 1013 to explicitly state that the original, signed, and notarized Form BD must be filed with the Membership Department in Rockville, Maryland.[49] With regard to submission of the forms, however, the NASD believes it is appropriate to require applicants to submit them because including the forms facilitates the NASD's ability to expeditiously process an application.

4. Capital Risks Posed by Proposed Business Activities

The commenter states that it is not clear what type of information would be required to satisfy the requirement of a description of the risk to capital presented by an applicant's proposed business activities under proposed Rule 1013(a)(2)(J).[50] In addition, the commenter notes that there currently is considerable variation among the District Offices regarding the application of this requirement.[51] Finally, the commenter questions the relevance of this information.

In responding to these comments, the NASD asserts that this information is necessary to establish an appropriate level of net capital for a particular applicant that ensures customers are adequately protected.[52] The NASD also notes, as described previously, that it has taken steps to ensure an appropriate degree of consistency and uniformity. For example, the NASD indicated that it will require memoranda or public offering documents containing information describing the risk to the applicant's capital.

5. Applicant's Best Practices and Supervisory System

The commenter states that the standards in proposed Rule 1014(a)(8), regarding the industry's best practices, and proposed Rule 1014(a)(9), concerning an applicant's supervisory

[43] Colish Letter, *supra* note 9.

[44] Colish Letter, *supra* note 9, at 4. The commenter agrees, however, that the restriction and change in ownership/control/operations processes should remain in the District Offices.

[45] NASD Response, *supra* note 6, at 4.

[46] Colish Letter, *supra* note 9, at 5.

[47] NASD Response, *supra* note 6, at 4.

[48] Colish Letter, *supra* note , at 5.

[49] Amendment No. 3, *supra* note 6; NASD Response, *supra* note 6, at 4.

[50] Colish Letter, *supra* note 9, at 6.

[51] For example, the commenter criticizes the high degree of scrutiny given to the source of capital for an applicant she recently represented. The NASD maintains that it will continue to carefully review the source of each applicant's capital in order to properly identify the true owners of an applicant and ensure that the owners do not include improper parties (*e.g.*, a person who has been barred from the industry).

[52] NASD Response, *supra* note 6, at 5.

system, are somewhat redundant.[53] In addition, the commenter asserts that those standards may be subject to wide differences of opinion and subjective judgment.

The NASD maintains that these standards are distinct.[54] It explains that the standard in proposed Rule 1014(a)(8) is designed to focus on whether an applicant is adopting the industry's best practices in certain areas, while the standard in proposed Rule 1014(a)(9) encompasses an applicant's overall supervisory system. The NASD states that it does not anticipate that an applicant's failure to meet the requirements of proposed Rule 1014(a)(8) would, by itself, be grounds for denying an application. In contrast, the NASD expects that an applicant's failure to meet the supervision requirements could be a sole basis for denying an application.

B. Rule 8000 Series

The ABA comment letter addresses the Rule 8000 Series.[55] The commenter notes that proposed Rule 8210, which requires the submission of information, testimony and books to the NASD, does not differentiate between the NASD's right to obtain information or documents prior to the filing of a complaint and such requests once a proceeding has been initiated.[56] The commenter also suggests that post-complaint discovery under proposed Rule 8210 should be reciprocal, and that information and documents submitted to the NASD should be returned upon completion of a disciplinary matter. In response, the NASD notes that a change to proposed Rule 8210 to limit the NASD's ability to obtain information and documents would impede the NASD in its performance of its investigatory and enforcement functions.[57] The NASD also points out that pursuant to proposed Rule 9251(a), the Department of Enforcement has an obligation to turn over certain documents to a respondent. Further, under the Brady doctrine and the Jencks Act, the Department of Enforcement has a continuing obligation to produce documents to the respondent. The NASD also states it must retain information and documents obtained for a disciplinary proceeding for a number of reasons, including enabling the NASD to meet its regulatory and enforcement obligations, and allowing the NASD to comply with SEC Rule 17a–1(b), which requires the NASD to retain such documents for five years.

The commenter notes that proposed Rule 8210 does not differentiate between parties and non-parties in requests for information or documents. Finally, the commenter states that proposed Rule 8210 does not address privileges otherwise available at law as a basis for objecting to a request for information or documents by the NASD, and suggests that the NASD create a mechanism to enable non-parties to limit the use of submitted materials. The NASD states that it interprets proposed Rules 9235 and 9146, setting forth the powers of a hearing officer, to authorize a hearing officer in appropriate circumstances to issue a protective order during the course of disciplinary proceedings.[58] The NASD has added subparagraph (k) to proposed Rule 9146 to clarify that the hearing officer has authority to issue a protective order upon the motion of a party or other person. The NASD points out, however, that this authority would not negate the NASD's obligation to respond to a subpoena, or the NASD's right or obligation to provide information to federal, state, and foreign regulatory authorities, as well as other self-regulatory organizations (''SROs'').[59]

The commenter adds that the comments made regarding proposed Rule 8210 above also apply to proposed Rules 8220 through 8225.[60] Further, the commenter states that the proposed rules should explicitly provide for less harsh sanctions than suspension in the case of a failure to provide requested information under proposed Rule 8210. The NASD states that most actions taken by the NASD in response to a failure to provide requested information pursuant to a Rule 8210 request are not brought under proposed Rule 8220, but are instead brought as disciplinary proceedings.[61] The NASD adds that as disciplinary proceedings, the Sanctions Guidelines apply, permitting a less severe sanction than a suspension. The NASD also notes that it has changed the verb in proposed Rules 8221 (a) and (b) from ''shall'' to ''may,'' clarifying that the NASD has other avenues, aside from proposed Rule 8220, to address the failure to provide requested information.

The commenter also suggests that proposed Rule 8310, relating to sanctions for violations of the NASD's rules, should contain a reference to the NASD Sanctions Guidelines.[62] The commenter believes that use of and reference in the rule to the Sanctions Guidelines would ensure consistency in the application of sanctions. The NASD does not believe that the Sanctions Guidelines should be incorporated into the Code of Procedure, noting that the Guidelines by their terms are flexible guidelines and not absolute rules.[63]

Further, the commenter suggests that the period for payment of fines, pursuant to proposed Rule 8320, should be extended to thirty days from the seven days proposed in the rule.[64] In its response, the NASD points out that the notice to a respondent issued pursuant to proposed Rule 8320 is actually the third communication a respondent has received regarding a payment of fines, other monetary sanctions, or costs. The first letter to the respondent (stating that payment is due within ten business days from the date of the letter) is prepared after the forty-sixth day after service of a disciplinary decision that is not appealed or called for review. A second letter is sent when payment has not been received within ten to fifteen business days of the first letter. After ten additional business days, the NASD prepares the Rule 8320 notice.

Finally, the commenter requests that the NASD's practice of accepting installment payment plans for fines of $5,000 or greater be continued and incorporated into the rule.[65] The NASD confirms in its response to the comment letter that it will inform its members of the existence of payment plans through the inclusion of information regarding installment plans in the NASD's Sanctions Guidelines, which are publicly available.[66]

C. Rule 9100 Through Rule 9300 Series

The ABA's letter also addresses the proposed Rule 9100 through the Rule 9300 Series. The commenter expresses general support for the NASD's proposed changes to its disciplinary process, but also sets forth specific comments and recommends certain modifications, as discussed below.[67]

1. Rule 9100 Series

The commenter makes several specific comments regarding the proposed Rule 9100 Series. The commenter believes that the text of proposed Rule 9136 regarding the filing of papers should be combined with proposed Rule 9266 regarding proposed

[53] Colish Letter, *supra* note 9, at 7.

[54] NASD Response, *supra* note 6, at 5.

[55] ABA Letter, *supra* note 9.

[56] ABA Letter, *supra* note 9, at 8.

[57] NASD Response, *supra* note 6, at 6.

[58] NASD Response, *supra* note 6, at 6–7.

[59] Amendment No. 3, *supra* note 6.

[60] ABA Letter, *supra* note 6, at 13–14.

[61] NASD Response, *supra* note 6, at 7.

[62] ABA Letter, *supra* note 9, at 18.

[63] NASD Response, *supra* note 6, at 7.

[64] ABA Letter, *supra* note 9, at 19.

[65] ABA Letter, *supra* note 9, at 20.

[66] NASD Response, *supra* note 6, at 8.

[67] ABA Letter, *supra* note 9.

findings of fact, conclusions of law and post-hearing briefs, and include a twenty-five page limitation.[68] The NASD believes that reordering the special pagination requirement that is now set forth in proposed Rule 9266 would introduce a level of detail well beyond that appropriate for the Code of Procedure.[69]

The commenter recommends that proposed Rule 9142 regarding the withdrawal by an attorney or representative should be amended to allow an attorney or representative the ability to withdraw from representation of a party, upon notice, at any time. Proposed Rule 9142 requires an attorney or representative of a party to give at least 30 days notice of withdrawal, and show good cause for the withdrawal. The commenter believes that these requirements do not provide sufficient flexibility to withdraw in compliance with the Code when such withdrawal is required under the Model Rules of Professional Conduct or is otherwise necessary. The commenter also recommends that a separate motion be required under Proposed Rule 9222(b), in the event that a hearing panel becomes concerned that counsel is withdrawing as a pretext to postpone or disrupt a hearing.[70]

The NASD agrees that the current version of proposed Rule 9142 does not afford an attorney or representative with sufficient flexibility to withdraw under the circumstances described above. The NASD therefore proposes to amend the provision to allow an attorney to withdraw in less than thirty days where circumstances do not permit thirty days notice. Further, the NASD agrees with the approach suggested by the commenter that a separate motion may be filed under proposed Rule 9222(b) to determine whether a hearing should be postponed.[71]

The commenter agrees with the NASD's efforts to separate the adjudicatory and prosecutorial functions, and prohibit *ex parte* communication with adjudicators. The commenter recommends, however, that proposed Rule 9143 regarding *ex parte* communications be amended to allow participants to a proceeding to respond to allegations or contentions contained in a prohibited *ex parte* communication.[72] The commenter also expresses concern that the Office of Hearing Officers is accountable to the President of NASD Regulation. The commenter recommends that, to avoid the perception of unfairness and bias regarding the separation of functions provisions set forth in proposed Rule 9144, the Office of Hearing Officers should report to the President of the NASD, rather than to the ''senior enforcer'' of NASD Regulation.[73]

In response to the commenter, the NASD proposes to incorporate into proposed Rule 9143 a provision allowing participants to a proceeding to respond to allegations or contentions contained in a prohibited *ex parte* communication.[74] The NASD has determined, however, that the Office of Hearing Officers should report to the President of NASD Regulation. The NASD notes that various measures have been implemented to assure the independence of the chief hearing officer and the hearing officers. For example, if the President of NASD Regulation terminates a hearing officer, the hearing officer has the right to appeal to the Audit Committee of the NASD Board of Governors. The NASD also notes that measures have been adopted to ensure that if the President of NASD Regulation participates in a discussion regarding a proposed issuance of a complaint, he or she will recuse him or herself and not attempt to influence an adjudicator or participate as an adjudicator in that disciplinary action.[75]

The commenter also recommends that the NASD explicitly provide in proposed Rule 9145 (regarding rules of evidence and official notice), as well as proposed Rule 9263 (regarding evidence admissibility), and Rule 9346(g) (regarding evidence in NBCC proceedings) that the Federal Rules of Evidence will serve as a guide to adjudicators in ruling on evidentiary matters that arise in disciplinary proceedings. The commenter believes that this would promote both fairness and uniformity in the disciplinary proceedings, while preserving the adjudicators' flexibility in ruling on evidentiary matters. The commenter also suggests that the official notice provision in Rule 9145 is vague and overbroad and is not consistent with the Federal Rules of Evidence provision stating that a judicially noticed fact must be ''not subject to reasonable dispute.'' The commenter is concerned that, by allowing an adjudicator to take official notice of ''other matters within the specialized knowledge of the NASD as an expert body'' (proposed Rule 9145(b)), certain matters that may be subject to a reasonable dispute and potentially the subject of expert testimony might be deemed to be true under the standard set forth in the proposed rule.[76]

The NASD does not believe it is appropriate to incorporate a reference to the Federal Rules of Evidence into proposed Rule 9145(a), Rule 9263, or Rule 9346(g). The NASD notes that formal rules of evidence traditionally have not been applied in SRO proceedings—e.g., hearsay may be admitted as evidence in SRO proceedings and the use of telephone testimony is accepted. The NASD believes that hearsay and telephone testimony should continue to be used as appropriate in a disciplinary proceeding administered under the Code.

Further, the NASD does not believe it is appropriate for the NASD to adopt the commenter's suggestion for proposed Rule 9145 regarding official notice. The NASD notes that the official notice procedure will not be a substitute for expert testimony, nor be frequently used. If a technical matter is the subject of debate or controversy, the NASD notes that it would not be officially noticed under proposed Rule 9145. Moreover, the NASD states that a party has the right to oppose or otherwise comment if an adjudicator proposes to take official notice.[77]

The commenter also proposes that the right to an interlocutory appeal, as set forth in proposed Rule 9148, should be available to contest any ruling denying a claim of attorney-client privilege or work-product privilege and any situation in which a panelist refuses to recuse him or herself. First, the commenter believes that the right to an interlocutory appeal regarding privilege claims will ensure that every effort has been taken to carefully examine the claim before disclosure is compelled. Second, the commenter believes that the interlocutory appeal of a panelist failing to recuse him or herself will help to eliminate a possible perception of unfairness in the proceeding.[78]

In response to the commenter's recommendation, the NASD notes that under the proposed Rule 9146 regarding general motions, a party and certain non-parties may file a motion seeking relief or guidance with regard to privilege issues. Further, the NASD notes that Rule 9251 authorizes the hearing officer to review relevant documents *in camera*. The NASD

[68] ABA Letter, *supra* note 9, at 30–31.

[69] NASD Response, *supra* note 6, at 8.

[70] ABA Letter, *supra* note 9, at 34.

[71] NASD Response, *supra* note 6, at 8. *See also* Amendment No. 3, *supra* note 6.

[72] ABA Letter, *supra* note 9, at 38.

[73] ABA Letter, *supra* note 9, at 39–40.

[74] NASD Response, *supra* note 6, at 8–9. *See also* Amendment No. 3, *supra* note 6.

[75] NASD Response, *supra* note 6.

[76] ABA Letter, *supra* note 9, at 41.

[77] NASD Response, *supra* note 6, at 9.

[78] ABA Letter, *supra* note 9, at 46–48.

recognizes that privilege issues are very important, but believes that to grant interlocutory review as a right regarding every contested privilege issue would ''cripple the SRO's adjudicatory process from the beginning.'' [79]

The NASD also believes that the failure of a panelist to recuse him or herself should not be the subject of an interlocutory appeal because if a panelist fails to recuse him or herself, a party may challenge the panelist through a disqualification motion. In addition, persons other than parties may inform the chief hearing officer or hearing officer of disqualifying factors, providing another avenue to remove a panelist from a hearing panel. Further, the NASD believes that such appeals would ''unduly burden the forum, would impose great costs, and would not further the public interest in the fair and speedy resolution of all disciplinary matters.'' [80]

The commenter generally supports the provision in proposed Rule 9150 authorizing hearing panels to exclude persons if they engage in contemptuous, unethical or improper professional conduct. [81] The commenter recommends that the NASD clarify that a representative excluded under Rule 9150 may seek review as provided under proposed rule 9280(c). The NASD has amended proposed Rule 9150 to clarify the relationship between Rule 9150 and Rule 9280(c). [82]

The commenter also recommends that proposed Rule 9160 regarding recusal or disqualification set forth procedural steps that must be followed in seeking disqualification of Governors, Directors, NBCC Committee members, and certain NASD Regulation staff when serving an adjudicatory role. [83] The NASD believes this is unnecessary because an adjudicator will recuse him or herself when he or she has a conflict of interest or a bias, and other members of a board or committee have the ability to suggest recusal or seek disqualification if the member does not act promptly to recuse him or herself. Moreover, the NASD generally does not believe that it is appropriate to codify internal board procedures. With respect to paragraph (g) (now paragraph (h)), the NASD also believes that the President of NASD Regulation may consider disqualification issues as appropriate. For the same reasons, the NASD does not believe specific procedures under which the President of NASD Regulation must act are necessary. [84]

2. Rule 9200 Series

The commenter also makes several specific comments regarding the proposed Rule 9200 Series. The commenter agrees with the proposal to transfer the authority to issue complaints to the Department of Enforcement, as set forth in proposed Rule 9211. To ensure that the process by which the Department of Enforcement authorizes and issues complaints is open and fair, the commenter recommends that the NASD provide guidance to the industry regarding the mechanics of the process through the issuance of a resolution of the Board of Governors or publication of a notice to members.

Further, the commenter suggests that the NASD should consider developing a pre-complaint forum for discussions between enforcement staff and counsel regarding any proposed charges. The commenter believes that both the enforcement staff and the potential respondents would benefit from discussions prior to the initiation of a formal proceeding. In addition, the commenter recommends that the NASD adopt a formal ''Wells-type submission'' process. The commenter also suggests that the NASD should adopt procedures for notifying affected persons or firms when an investigation has been terminated without the filing of a complaint. [85]

The NASD agrees with the commenter's suggestion that the NASD should provide guidance regarding the complaint authorization and issuance process. The NASD proposes to do so in a notice to members, which will describe the roles of the various parties in developing a disciplinary proceeding, and authorizing and issuing a complaint. The NASD notes that disciplinary proceedings are initiated in NASD district offices, the Department of Market Regulation, and the national office of the Department of Enforcement. The NASD states that the notice will describe each department's role in identifying and organizing the evidence that is the foundation of the disciplinary proceeding and drafting a complaint, and the role of the national office of the Department of Enforcement and the Office of Disciplinary Policy in authorizing the complaint. The notice to members will also provide guidance on the NASD's use of the ''Wells-type procedure'' by which a potential respondent may make a written submission to the Department of Enforcement prior to the issuance of a complaint. The NASD, however, does not propose to codify the use of the ''Wells-type procedure,'' or the use of letters informing affected persons that an investigation has been terminated. [86]

The commenter also suggests that proposed Rule 9216 regarding AWCs should provide greater clarification concerning the pre-complaint settlement process. In addition, the commenter recommends that the proposed rule contain a provision explicitly permitting a potential respondent to consent to the issuance of an AWC without admitting or denying the facts or allegations contained in the AWC. [87]

The NASD agrees that the industry should be informed of how to initiate settlement discussions or pre-complaint discussions, and states that such guidance will be included in the notice to members described above. Further, in response to the recommendation that the Code contain a provision ''explicitly permitting a respondent to consent to the issuance of an AWC without admitting or denying the facts or allegations contained in the AWC'' and a second provision ''reflecting the fact that the settlement is being offered (and accepted) without any prior adjudication or evidentiary hearing, so as to minimize any potential collateral consequences,'' the NASD believes that the terms of a settlement or an AWC should be based on the applicable law and the particular facts and circumstances of each case. The NASD notes that the terms of settlement documents or AWCs will change as federal and state law evolves. Accordingly, the NASD does not believe that it is appropriate to attempt to codify standardized settlement language. [88]

The commenter recommends that proposed Rule 9221 regarding requests for hearing should require that at least one person serving as a panelist on a hearing panel or extended hearing panel ''be engaged in similar activities within the securities industry as the respondent.'' The commenter believes that this requirement will provide a higher level of expertise and a better perspective to a hearing panel. In addition, the commenter suggests that the minimum notice period prior to a hearing as provided in proposed Rule 9221(d) should be expanded from twenty-eight to sixty days. The commenter is concerned that

[79] NASD Response, *supra* note 6, at 10.

[80] NASD Response, *supra* note 6, at 10.

[81] ABA Letter, *supra* note 9, at 49–50. *See infra* discussion regarding ABA comments on proposed Rule 9280.

[82] NASD Response, *supra* note 6. *See also* Amendment No. 3, *supra* note 6.

[83] ABA Letter, *supra* note 9, at 52.

[84] NASD Response, *supra* note 6, at 11.

[85] ABA Letter, *supra* note 9, at 53–57.

[86] NASD Response, *supra* note 6, at 11.

[87] ABA Letter, *supra* note 9, at 64–65.

[88] NASD Response, *supra* note 6, at 11–12.

respondents will not have sufficient time to prepare for the hearing.[89]

The NASD agrees that persons with securities industry expertise should be fully represented on the hearing panels, and notes that proposed Rules 9231 and 9232 provide that the chief hearing officer will consider ''expertise'' and ''the absence of any conflict of interest or bias, and any appearance thereof'' as factors in selecting panelists. The NASD believes that these provisions ensure that the panelist selection process will provide panelists with a sufficient level of expertise and perspective. Accordingly, the NASD declines to amend proposed Rule 9221(a) (or other related provisions) as recommended above.

The NASD further believes that the commenter's recommendation to expand the notice period prior to a hearing is not necessary. The NASD notes that in most cases parties will be notified several months in advance of the hearing, but that there will be occasions when it will be in the public interest to proceed as quickly as possible. In addition, very simple cases may be dealt with expeditiously to the benefit of both parties.[90]

In proposed Rule 9222(b)(1), the NASD proposed a list of factors for a hearing officer when ruling on a motion for postponement or adjournment of a hearing. The commenter suggests that the hearing officer should not be required to consider any particular factors, but to the extent that the NASD codifies specific factors, it should include additional factors, such as ''the amount of time that has passed since the commencement of the investigation and the issuance of the complaint; whether there is any outstanding discovery; the amount of notice the parties had of the hearing; the complexity of the case; and prior commitments of counsel.''[91]

The NASD believes that the standards as originally proposed are appropriate, and consistent with Commission standards. The NASD believes that there is a bias in favor of denying postponements and adjournments because of the need to proceed expeditiously toward a resolution in order to further the public interest and benefit the parties involved in such proceedings. The NASD also states that the proposed rules relating to timing, including postponements, will be applied fairly, but postponements will not be granted each time a motion is made.[92]

The commenter makes several recommendations regarding proposed Rule 9231 (Appointment by the Chief Hearing Officer of Hearing Panel or Extended Hearing Panel) and proposed Rule 9232 (Criteria for Selection of Panelists and Replacement Panelists). First, the commenter supports the concept of hearing panels, as set forth in the rules, as ''appropriate to achieve a balance between 'peer justice' and more uniform and professional rulings.''[93] The commenter believes, however, that the criteria used by the chief hearing officer to select panelists is ''unclear and open-ended.''[94] In particular, the commenter believes that proposed Rule 9232 provides the chief hearing officer with too much discretion to choose panelists from anywhere in the country, rather than selecting members from the primary district committee.[95] The commenter also states that it is unclear under proposed Rule 9232(d) whether someone who has served frequently or infrequently on hearing panels is more likely to be selected.[96] In addition, the commenter is concerned that the Department of Enforcement may be able to ''pre-select'' panelists from the Market Regulation Committee (current or former members) by alleging at least one violation set forth in proposed Rule 9120(r),[97] thereby affecting the selection process.[98]

The NASD believes that it is necessary to provide the chief hearing officer with flexibility to both appoint panelists with expertise and to avoid selecting panelists with perceived or real bias or conflicts of interest. In addition, the NASD states that the chief hearing officer will attempt to ensure broad-based participation by all segments of the securities industry; the NASD desires that more people be involved in the adjudicatory process so the perception and the reality is that disciplinary proceedings are fair.[99] The NASD also proposes to amend Rule 9232(d)(4) to clarify that the Office of Hearing Officers will be less likely to select a person who has served frequently on a disciplinary panel than a person who has not.[100]

Further, the NASD points out that the comment reflects a misunderstanding of the scope of proposed Rule 9120(r), the definition of the Market Regulation Committee. The NASD notes that proposed Rule 9120(r) does not intend to place all federal and state securities laws, rules, and regulations under the advisory jurisdiction of the Market Regulation Committee. A current or former member of the Market Regulation Committee will serve on a panel only when the matter relates to certain subjects, including: quotations of securities; execution of transactions; reporting of transactions; and trading practices. The NASD further notes that the chief hearing officer, while provided with flexibility to choose panelists nationwide under proposed Rule 9232 (c), (d), and (e), cannot pre-select panelists and will not allow the Department of Enforcement to pre-select panelists.[101]

Pursuant to proposed Rule 9241, pre-hearing conferences are discretionary upon a motion by a party or at the request of the hearing officer. The commenter believes that the pre-hearing conference, in most cases, should be mandatory. In addition, the commenter recommends that the time period from the date of the answer to the pre-hearing conference be extended from twenty-one to forty-five days. The commenter also suggests that the list of subjects to be covered at the pre-hearing conference be expanded to include ''non-party discovery, confidentiality, and privilege issues and the issuance of protective orders.''[102]

The NASD does not believe it is appropriate to change proposed Rule 9241 so that a pre-hearing conference takes place within forty-five days after the answer has been filed instead of the twenty-one day period, as currently proposed. The NASD must ensure that disciplinary proceedings move forward as expeditiously as is possible while maintaining a fair forum for the parties. The NASD believes that for disciplinary proceedings where simple issues are involved, or with multiple pre-hearing conferences, creating a delay beyond twenty-one days is not a proper use of NASD or panelist resources and imposes an unnecessary cost on a respondent. The NASD also believes that it is unnecessary to include additional subjects to be covered at the pre-hearing conference because proposed Rule 9241(c)(10) encourages the parties to request that the hearing officer consider any issue not specifically listed in the rule.[103]

Proposed Rule 9242 regarding pre-hearing submissions indicates that the

[89] ABA Letter, *supra* note 9, at 67.

[90] NASD Response, *supra* note 6, at 12–13.

[91] ABA Letter, *supra* note 9, at 69.

[92] NASD Response, *supra* note 6, at 13.

[93] ABA Letter, *supra* note 9, at 71.

[94] ABA Letter, *supra* note 9, at 73.

[95] Proposed Rule 9232 sets forth criteria for the chief hearing officer to consider when designating a particular district committee as the primary district committee.

[96] ABA Letter, *supra* note 9, at 74–75.

[97] *Supra* note 23.

[98] ABA Letter, *supra* note 9, at 75.

[99] NASD Response, *supra* note 6, at 13–14.

[100] Amendment No. 3, *supra* note 6.

[101] NASD Response, *supra* note 6, at 13–14.

[102] ABA Letter, *supra* note 9, at 81.

[103] NASD Response, *supra* note 6, at 14.

appropriate adjudicator may, at his or her discretion, order the exchange and/or furnishing of information prior to a hearing. The commenter believes that this should be mandatory. In addition, the commenter argues that such an exchange of information should be made at least thirty days before the hearing.[104] The NASD does not believe that it is appropriate in every case to require a hearing officer to order the parties to furnish information regarding the case. The NASD believes that the hearing officer has been provided appropriate discretion to control the proceeding, and determine if a pre-hearing exchange of the information is necessary.[105]

The commenter recommends several changes to the discovery rules set forth in proposed Rule 9251. First, the commenter believes that the proposed rule should not include a standard regarding materiality and relevance in the post-complaint time frame. If a relevance standard is required, the enforcement staff should be required to provide a list of all documents it obtains to the respondent, and the hearing officer, not the enforcement staff, should make determinations of relevance.[106] The commenter also recommends that if the staff fails to make documents available, the staff, rather than the respondent, should have the burden to prove that such failure constituted harmless error.[107]

The commenter also believes that the only documents that the staff should be able to withhold pursuant to proposed Rule 9251(b) are privileged documents or documents constituting attorney work product. The commenter also believes that the proposed rule should contain a provision that addresses privilege and work-product immunity for both the staff and respondents. Further, the commenter suggests that Federal Rule of Evidence 501 (for privilege issues) and Federal Rule of Civil Procedure 26(b)(3) (for work-product immunity issues) should be used as a model. The commenter suggests that if the staff wants to withhold documents on any other basis, a motion for protective order should be required. In addition, the commenter recommends that the NASD consider the impact of Fifth Amendment claims before the NASD. The commenter believes that expulsion from the NASD for asserting the Fifth Amendment is too severe and will continue to result in constitutional challenges to the self-regulatory system.[108]

The NASD believes that a secondary production of documents should be subject to a material relevance standard so that the Department of Enforcement only has to turn over documents that are relevant to the proceeding initiated and not other documents that may relate to a potential, but yet-to-be named respondent as part of the same investigation file. In addition, in the NASD's view, its enforcement efforts would be impaired if all internal memoranda were required to be produced. The NASD notes that not all examinations are done by lawyers, and therefore the resulting documents and reports may not be privileged.[109]

Further, the NASD believes it would be inappropriate to mandate a withheld document list in every case. The NASD notes that a withheld document list in certain cases could enable a reader to trace the course of an investigation, forcing improper disclosure about the investigation and the investigatory process in circumstances that could impede a continuing investigation of another member or associated person. The NASD notes, however, that the hearing officer may request *in camera* inspection of documents, and may order the production of a list of withheld documents, on a case-by-case basis. In the NASD's view, requiring a list in every case would be burdensome and costly.[110] Accordingly, the NASD has added a sentence to proposed Rule 9251(c) stating: ''[a] motion to require the Department of Enforcement to produce a list of documents withheld pursuant to paragraph (b) shall be based upon some reason to believe that a document is being withheld in violation of the Code.'' [111]

The NASD also believes it would be undesirable to adopt Federal Rule of Evidence 501 for privilege issues and Federal Rule of Civil Procedure 26(b)(3) regarding work-product immunity. The NASD states that it must provide a fair process but is not limited by the specific evidentiary rules relating to privilege in the Federal Rules of Evidence and the Federal Rules of Civil Procedure.

In addition, the NASD believes that the suggested change to the harmless error provision is unnecessary. The NASD notes that the provision is based upon the Commission's rule and recognizes that proposed Rule 9251 affords the respondent the right to receive the documents and information in preparation for his defense in a disciplinary matter.

The NASD further states that it would be inappropriate to change its position that there is no Fifth Amendment privilege in an SRO disciplinary investigation or proceeding. A respondent therefore may not claim the Fifth Amendment without sanction.[112]

The commenter recommends that the minimum time for pre-hearing exchange of proposed exhibits and witness lists, as set forth in proposed Rule 9261, should be expanded from ten to thirty days. The commenter believes that ten days will not provide parties enough time to prepare for a hearing.[113]

The NASD believes it would be inappropriate and unnecessary to amend the minimum period for pre-hearing exchange of proposed exhibits and witness lists. As noted earlier with respect to the NASD's comments regarding the twenty-eight day notice given prior to a hearing in proposed Rule 9221(d), there are cases in which a hearing may or should proceed expeditiously in order to serve the interest of all the parties, to protect the public interest, or to preserve resources. With respect to difficult or large cases, the NASD's Office of Hearing Officers has indicated that parties will be required to exchange such information much earlier than ten days before the hearing.[114]

The commenter notes that proposed Rule 9262 regarding testimony does not address whether telephone testimony will be permitted. The commenter believes that the use of telephone testimony raises fairness issues.[115] Accordingly, the commenter recommends that the proposed rule should prohibit telephone testimony unless all parties agree to such testimony. As an alternative, the commenter recommends that for good cause shown, a witness should be able to present a pre-hearing videotaped testimony.[116]

The NASD states that to fulfill its SRO enforcement responsibilities, it must rely upon the voluntary cooperation of firm customers. The NASD needs to

[104] ABA Letter, *supra* note 9, at 82.

[105] NASD Response, *supra* note 6, at 14.

[106] ABA Letter, *supra* note 9, at 85.

[107] ABA Letter, *supra* note 9, at 89.

[108] ABA Letter, *supra* note 9, at 89–90.

[109] Further, the NASD proposes to expand the category of documents that may be withheld by the Department of Enforcement from the respondent under proposed Rule 9251(b)(1)(C), to exclude from production, among other things, correspondence between the NASD and a state, federal, or foreign regulatory authority or an SRO. Amendment No. 3, *supra* note 6.

[110] NASD Response, *supra* note 6, at 14–15.

[111] Amendment No. 3, *supra* note 6.

[112] NASD Response, *supra* note 6, at 14–15.

[113] ABA Letter, *supra* note 9, at 93.

[114] NASD Response, *supra* note 6, at 15–16.

[115] The commenter believes that it would be difficult to cross-examine and to determine the demeanor of a witness during telephone testimony. ABA Letter, *supra* note 9, at 95.

[116] ABA Letter, *supra* note 9, at 95.

remain flexible in obtaining the cooperation of customers, including obtaining testimony to be used in a disciplinary proceeding. Thus, the NASD believes it would be undesirable to ban telephone testimony from use in a disciplinary proceeding. The NASD notes that the circumstances of each case will be reviewed and considered in determining whether to allow telephone testimony and how to weigh the testimony. To address credibility issues, the hearing officer may request that the party on whose behalf the telephone testimony is sought provide a notary at the site of the witness to swear in the witness, or obtain an affidavit or declaration from the witness, acknowledging that the testimony will be given under oath. The hearing officer may alternatively require that the witness review the transcript of his or her telephone testimony, attach it to an affidavit or declaration, and swear to the veracity of the attached testimony. Finally, in certain cases, unsworn testimony will be admitted, but its weight shall be considered in light of the circumstances in which it was taken.

In response to the comment regarding video-taped testimony, the NASD interprets the proposed Code in appropriate circumstances to authorize a hearing officer to order a party to video-tape the pre-hearing testimony of a person who will not be physically present at the hearing. The NASD notes, however, that extensive use of video-taped testimony would be costly and, therefore, will not occur routinely.[117]

The commenter commends the incorporation of proposed Rule 9264 regarding motions for summary disposition, but suggests that NASD make several modifications. First, the commenter recommends that hearing panels be instructed that the option to defer a decision on a proposed Rule 9264 motion for summary disposition not be used to avoid determining whether the Department of Enforcement staff has a case that it can prove. Second, the commenter recommends that the Department of Enforcement should not have the ability to move for summary disposition after a hearing on the merits has commenced, or after the Department of Enforcement has completed its case. Third, the commenter recommends that the rules should expressly state that dispositive motions against respondents should be granted only in ''completely clear-cut circumstances.'' Fourth, the commenter recommends a technical revision to proposed Rule 9264(d) which provides that, in ruling on motions for summary disposition, the hearing panel shall take as true ''the facts alleged in the pleadings against whom the motion is made'' unless those facts are contradicted by ''uncontested affidavits'' or ''stipulations or admissions made by the non-moving party.'' The commenter suggests that the word ''uncontested'' should be deleted and the moving party be required to support its motion with affidavits or other materials showing that there is no genuine issue for trial.[118]

The NASD agrees that hearing panels be instructed that the option to defer a decision on a proposed Rule 9264 motion for summary disposition should not be used to avoid determining whether the Department of Enforcement has a case that it can prove. Dispositive motions play a valuable role in cases where the evidentiary basis is lacking or where a legal claim is not set forth in the complaint. However, the NASD does not believe that it is appropriate to codify such instructions.

In addition, the NASD states that it will amend proposed Rule 9264(b) to eliminate the ability of the Department of Enforcement to move for summary disposition after a hearing on the merits has commenced. While the NASD recognizes that in the pre-hearing context of proposed Rule 9264(a) such dispositive motions should be granted against a respondent only in very clear cases, it does not propose to codify this policy. Further, the NASD agrees with the commenter that paragraph (d) of proposed Rule 9264 should be amended.[119]

The commenter recommends that the NASD adopt changes to proposed Rule 9270 to provide guidance as to what constitutes a frivolous offer, to apply the Sanctions Guidelines to such offers, and to specify the procedures that should govern an offer of settlement once a hearing has begun. The commenter also recommends that the NASD consider designating hearing officers as a ''Duty Officer'' on a rotating basis to consider settlement offers to eliminate any appearance of unfairness from hearing officers being allowed to reject offers of settlement and later conduct the hearing on the merits.[120]

The NASD does not believe that it is necessary or appropriate to adopt these proposed changes to proposed Rule 9270. First, the NASD does not believe it is appropriate to codify ''standardized language'' to be used routinely in settlement documents. Second, in the NASD's view, the application of the Sanctions Guidelines to a particular disciplinary proceeding should not be codified. Third, the NASD does not believe it is appropriate to amend proposed Rule 9270(c) based on the commenter's concern that a hearing panel or an extended hearing panel may view with prejudice some aspect of a respondent's case if the respondent previously submitted an offer of settlement that the hearing panel or the extended hearing panel rejected. The NASD notes that although some jurisdictions provide settlement judges, in most jurisdictions, a judge continues to preside over the case throughout the disciplinary process, even after approving or disapproving a settlement. The NASD notes further that it is the duty of the hearing officer sitting on the hearing panel or the extended hearing panel to instruct the panelists to disregard the proposed settlement therefore allowing the respondent to obtain a fair hearing on the merits.[121]

Proposed Rule 9280 sets forth a list of sanctions that may be imposed upon a party and/or a party's attorney for conduct in violation of an order or ''other contemptuous conduct during a proceeding.'' The commenter recommends that the NASD define ''contemptuous conduct'' in the proposed rule.[122] The commenter does not believe it is clear to what extent the hearing panel must consider an attorney's ethical obligation to vigorously represent a client in determining the limits of acceptable conduct. Further, the commenter suggests that an attorney subject to an exclusion order should have the right to an oral argument before the NBCC.[123]

The NASD believes it is unnecessary to define ''contemptuous conduct.'' The NASD does not believe that the use of proposed Rule 9280 against a counsel will compromise zealous advocacy of a client; in any case, the NASD will analyze any interpretive questions on a case-by-case basis. Further, the NASD does not believe it is appropriate to codify that an attorney has the right to oral argument before the NBCC in every case as a matter of right if the attorney is appealing a proposed Rule 9150 exclusion order. The NASD notes that under proposed Rule 9150 and

[117] NASD Response, *supra* note 6, at 16.

[118] ABA Letter, *supra* note 9, at 98–103.

[119] NASD Response, *supra* note 6, at 16–17. *See also* Amendment No. 3, supra note 6.

[120] ABA Letter, *supra* note 9, at 112–114.

[121] NASD Response, *supra* note 6, at 17–18.

[122] In a previous comment regarding proposed Rule 9150 (Exclusion from Rule 9000 Series Proceeding), the commenter also recommends that the NASD ensure that an attorney's obligations under the Model Rules of Professional Conduct are not compromised by the application of this proposed rule.

[123] ABA Letter, *supra* note 9, at 116.

proposed Rule 9280, attorney exclusion is the only contested order following which an interlocutory appeal is granted as a matter of right. The NASD states that the Code need only provide that an attorney (or a representative) may request oral argument before the NBCC when he or she is appealing a proposed Rule 9150 exclusion order, as the proposed Rule currently does.[124]

3. Rule 9300 Series

The rules provide for two levels of discretionary review of disciplinary proceedings by the NASD Regulation Board of Directors (proposed Rules 9351) and the NASD Board of Governors (proposed Rule 9352). The commenter recommends that the proposed rules should restrict a call for review to either the NASD Regulation Board, or the NASD Board, but not both.[125] The NASD generally agrees with the comment regarding the two levels of discretionary review of disciplinary proceedings. The NASD states that a central feature of the corporate restructuring recently approved by the NASD Board of Governors, and shortly to be submitted to the Commission, is to eliminate such unnecessary levels of discretionary review.[126]

The commenter also recommends that a bar or expulsion become effective thirty days after service rather than effective upon service as set forth in proposed Rule 9360. In addition, the commenter recommends that the bar or expulsion be effective only upon personal service on the member.[127]

The NASD proposes to amend proposed Rule 9360 to reflect the concern of the commenter that a person subject to a sanction of a bar or an expulsion be personally served. Because such persons are often very difficult to serve, the NASD proposes to amend proposed Rule 9360 to provide that the NASD shall take reasonable steps to obtain personal service of a respondent when the sanction is a bar or an expulsion.[128] A bar or expulsion will continue to be effective upon service. The NASD states that a party may seek a stay of the effectiveness of the sanction from the Commission or from the appropriate federal court.[129]

The commenter notes that proposed Rule 9370 stays the effectiveness of any sanction other than a bar or an expulsion upon application for review by the Commission pursuant to Section 19(d)(2) of the Act. The commenter recommends that bars and expulsions should also be stayed pending appeal under proposed Rule 9370.[130] The NASD, however, believes that a bar or an expulsion should not be stayed automatically upon an application for review by the Commission pursuant to Section 19(d)(2) of the Act.[131] As noted in the NASD's response to proposed changes to proposed Rule 9360, an aggrieved person may seek a stay from the Commission or from the appropriate federal court.[132]

IV. Discussion

As discussed more fully herein, the Commission has determined at this time to approve the NASD's proposed rule change. The standard by which the Commission must evaluate a proposed rule change is set forth in Section 19(b) of the Act. The Commission must approve a proposed NASD rule change if it finds that the proposal is consistent with the requirements of the Act and the rules and regulations thereunder that govern the NASD.[133] In evaluating a given proposal, the Commission examines the record before it and all relevant factors and necessary information. In addition, Section 15A of the Act establishes specific standards for NASD rules against which the Commission must measure the NASD proposal.[134]

As discussed below, the Commission has evaluated the NASD's proposed change in light of the standards and objectives set forth in the Act and, in particular, Sections 15A [135] and 3(f) [136] of the Act. The Commission believes the NASD's proposed rule change is consistent with the Act. The Commission also believes the rule change proposed by the NASD is consistent with the NASD's Undertakings in the SEC Order and is reasonably taken in furtherance of the Undertakings. The Commission expects that the NASD's rule change should strengthen the NASD's operational and disciplinary procedures, which are important in governing its members in a free, open, and competitive market. Further, in the Commission's view, the proposed change should enhance the dispassionate application of rules and fairness in the disciplinary process and bring greater consistency and fairness to the membership application and other regulatory processes.

A. Changes to the Membership and Registration Rules

For the reasons discussed below, the Commission believes the proposed rule change regarding membership decisions is consistent with the Act and the rules and regulations thereunder applicable to a national securities association. In particular, the proposal is consistent with Sections 15A(b)(3), 15A(b)(8), 15A(g)(3), and 15A(h)(2) of the Act.[137] This change improves the current system by implementing safeguards to ensure that decisions regarding membership are addressed in a fair and efficient manner. Moreover, the rule change is reasonably taken in furtherance of the Undertakings and is consistent with the Undertakings.

That portion of the settlement between the Commission and the NASD concerning the admission of member firms to the NASD requires the regulatory staff of the NASD, subject only to the supervision of the Board of Governors of the NASD and the Board of Directors of NASD Regulation, to have sole discretion to handle the approval of applications for membership and the conditions and limitations on membership.[138] The District Committees (including any subcommittees) may not be involved in the review or approval of applications for membership in the NASD.[139] Moreover, the NASD agreed to promulgate and apply on a consistent basis uniform standards regarding admission to the NASD and to institute safeguards to ensure fair and

[124] NASD Response, *supra* note 6, at 18.

[125] ABA Letter, *supra* note 9, at 135–36.

[126] NASD Response, *supra* note 6, at 18–19.

[127] ABA Letter, *supra* note 9, at 137.

[128] Amendment No. 3, *supra* note 6.

[129] NASD Response, *supra* note 6.

[130] ABA Letter, *supra* note 9, at 138–39.

[131] Under proposed Rule 9370, other sanctions are stayed when an application for review is filed.

[132] NASD Response, *supra* note 6, at 19.

[133] 15 U.S.C. § 78s(b).

[134] 15 U.S.C. § 78*o*–3.

[135] For example, Section 15A(b)(8) requires that the rules of an association provide a fair procedure for the disciplining of members and persons associated with members, the denial of membership, the barring of any person becoming associated with a member thereof, and for the prohibition or limitation by the association of any person with respect to access to services offered by the association. Section 15A(h)(2) requires a registered securities association when determining whether a person shall be denied membership, barred from becoming associated with a member, or prohibited or limited with respect to access to services offered by the association or member thereof, to notify such person of and give him an opportunity to be heard upon, the specific grounds for denial, bar, or prohibition or limitation under consideration and keep a record. Section 15A(h)(3) governs when a registered securities association may summarily suspend a member or a person associated with a member.

[136] In approving this proposal, the Commission notes that it has considered the proposed rule change's impact on efficiency, competition, and capital formation. 15 U.S.C. § 78c(f).

[137] 15 U.S.C. §§ 78*o*–3(b)(3), 78*o*–3(b)(8), 78*o*–3(g)(3), and 78*o*–3(h)(2).

[138] SEC Order, *supra* note 10; *see also* Undertaking 4, *supra* note 15.

[139] SEC Order, *supra* note 10; *see also* Undertaking 4, *supra* note 15.

evenhanded access to the NASD's services.[140]

1. Processing Membership Applications

The Commission noted in the 21(a) Report that the District Committee (or a subcommittee it created called the Pre-Membership Interview (''PMI'') Subcommittee) at the New York City District 10 office of the NASD encouraged the close scrutiny of applicants who appeared likely to engage in active SOES trading.[141] This scrutiny substantially hindered or delayed a number of these applications, even though the NASD's rules provided for reasonable review periods.

The current membership application procedures require an applicant to file its application with the District Office where the applicant intends to have its principal place of business. The District Office will then schedule a premembership interview within a reasonable time after it receives the application and supporting documents. Within thirty days after the conclusion of the premembership interview, a subcommittee will consider the application and notify the applicant in writing whether its application has been granted, denied, or granted subject to restrictions, and provide the rationale for such determination. If an application is denied, the applicant has the right to file an appeal with the District Committee within fifteen days. The District Committee will consider the record developed before it and notify the applicant in writing within a reasonable time after the close of the record whether its application has been granted, denied, or granted subject to restrictions on its business activities. The applicant also has the right to appeal the District Committee's decision to the NBCC. The NBCC will consider the record developed before it and notify the applicant in writing within a reasonable time after the close of the record whether its application has been granted, denied, or granted subject to restrictions on its business activities. Determinations of the NBCC may be called for review by either the Board of NASD Regulation or the Board of the NASD.

Rather than requiring the NASD to simply act within a ''reasonable time frame,'' the proposed rule change sets forth a schedule for the membership application process and allows applicants to ensure that their applications are being processed expeditiously. The process begins with the submission of an application to the NASD. The first part of the application must be filed with the Membership Department,[142] and the second part of the application must be filed with the Department of Member Regulation at the District Office in the District in which an applicant intends to have its principal place of business.[143] The Department will notify an applicant within thirty days after it receives an application whether the application is complete.[144] Within ninety days after the receipt of the application or within sixty days after the receipt of all additional information, whichever is later, the Department will schedule a membership interview.[145] The Department will issue its written decision within thirty days after the conclusion of the membership interview or within thirty days after the submission of additional information, whichever is later.[146]

If the Department fails to issue its decision within 180 days after the receipt of an application, or such later date as the Department and an applicant have agreed to in writing, an applicant may petition the NASD Board in writing to direct the Department to issue a decision.[147] Within seven days of receiving such a request, the NASD Board will instruct the Department to serve its written decision immediately or show good cause for an extension of time. If the Department establishes good cause for an extension of time, the NASD Board may grant the Department an extension of no more than ninety days.[148]

If the Department denies an application, the applicant may request that the NBCC review the decision.[149] If a hearing is requested, it shall be conducted by a subcommittee of the NBCC within forty-five days after the receipt of the request.[150] The subcommittee will present its recommended decision to the NBCC within sixty days after the date of the hearing.[151] The NBCC will then provide the NASD Regulation Board with its proposed written decision.[152] If the decision is not called for review by the NASD Regulation Board, the NBCC will transmit its proposed written decision to the NASD Board.[153] If the NASD Board does not call the decision for review, the NBCC will serve the applicant with written notice specifying the date on which the call for review period expired and stating that the final written decision will be served within fifteen days after such date.[154]

If the NBCC fails to issue its decision within fifteen days after the expiration of the call for review period, the applicant may petition the NASD Board in writing to direct the NBCC to issue its decision.[155] Within seven days of receiving such a request, the NASD Board will instruct the NBCC to serve its written decision immediately or show good cause for an extension of time. If the NBCC establishes good cause for an extension of time, the NASD Board may grant the NBCC an extension of no more than fifteen days.

The Commission believes these detailed procedures will help ensure that applications will be processed in a timely manner. Centralizing the new member review process at the NASD's headquarters, however, is not necessary to facilitate the process. Each step in the application process contains a discrete time frame within which the NASD must act. In addition, the NASD has represented that significant initiatives are already underway to ensure national uniformity and consistency in the treatment of membership applications.[156]

[140] SEC Order, *supra* note 10; *see also* Undertaking 5, *supra* note 15.

[141] 21(a) Report, *supra* note 10, at 41, A–74.

[142] Specifically, the first part of the application must contain an original, signed, and notarized Form BD, with applicable schedules; an original, signed Form U–4 for each associated person who is required to be registered under the rules of the NASD; an original NASD-approved fingerprint card for each associated person who will be subject to SEC Rule 17f–2; a new member assessment report; a new member firm contact questionnaire; and a check for the appropriate fee. Proposed Rule 1013(a)(1).

[143] The second part of the application must include, among others: a monthly projection of income and expenses, with supporting rationale, for the first 12 months of operations; a list of all associated persons, the most recent Form U–4 and Form U–5 for each associated person, any other document that discloses the disciplinary history of each associated person, and a list of any other persons or entities that will exercise control with respect to the applicant's business; and a description of the nature and source of applicant's capital, including a list of all persons or entities that have contributed or plan to contribute financing to the applicant's business, the terms and conditions of such financing arrangements, the risk to net capital presented by the applicant's proposed business activities, and any arrangement for additional capital should a business need arise. Proposed Rule 1013(a)(2).

[144] Proposed Rule 1013(a)(4).

[145] Proposed Rule 1013(c)(3).

[146] Proposed Rule 1014(d)(1).

[147] Proposed Rule 1014(d)(3).

[148] Proposed Rule 1014(d)(3).

[149] Proposed Rule 1015(a).

[150] Proposed Rule 1015(f).

[151] Proposed Rule 1015(h).

[152] Proposed Rule 1015(i)(3). The NASD anticipates that the NBCC will provide the Boards with its proposed decision at the next applicable Board meeting after receiving the subcommittee's recommendation.

[153] Proposed Rule 1015(i)(3).

[154] Proposed Rule 1015(i)(3).

[155] Proposed Rule 1015(i)(4).

[156] For example, the NASD noted that training sessions focusing on the proposed rules have been

Continued

It is also reasonable for the application for membership to require applicants to provide the information set forth in proposed Rule 1013(a). The required information is reasonably necessary to facilitate the NASD's ability to review an application and determine if an applicant will be able to comply with all of the applicable standards. In particular, it is appropriate to require applicants to project income and expenses for the first twelve months of operations, to describe the nature and source of the applicant's capital, and to submit copies of Forms U–4 and U–5 as part of their application.

Specifically, it is reasonable to require applicants to furnish a monthly projection of income and expenses for the first twelve months of operations because this information enhances the NASD's ability to determine whether an applicant has a reasonable expectation of being able to comply with the net capital rule once an applicant commences business. It should not be overly burdensome for applicants to provide this information because most new firms already project the revenues necessary to help meet fixed and other expenses for business reasons.

Similarly, it is appropriate for applicants to provide a description of the nature and source of an applicant's capital.[157] This information will assist the NASD in determining whether the applicant will have difficulty in maintaining required net capital. Moreover, it enhances the NASD's ability to correctly identify the true owners of a firm and thus ensure that improper parties (*e.g.*, parties that are barred from the industry) are not involved.

It is also reasonable to require applicants to submit copies of Forms BD, U–4, and U–5 as part of their application. Presenting the NASD with all of the relevant information in one package, including these forms, should help expedite the processing of applications.

Finally, the proposal adequately addresses a commenter's concern that the tolling provisions may prolong the application process.[158] Although these provisions allow the maximum time limits to begin from the date of the Department's last request for information, the proposal also allows an applicant to demand that the Department issue its written decision within 180 days after it was received by the NASD, notwithstanding any of the tolling provisions. This should prevent the Department's requests for information from unduly delaying the application procedure.[159]

2. Membership Standards

In the 21(a) Report, the Commission found that the NASD applied criteria not enumerated in the NASD's rules to some applicants.[160] Currently, the NASD's rules do not contain explicit standards that an applicant must meet; they only contain general topics that the membership interview will cover.[161] In addition, the current rules only require that the NASD provide the general rationale for its decision.

In contrast, the proposed rule change sets forth thirteen standards that the NASD must consider.[162] Moreover, if the NASD denies an application, the proposed rules explicitly require that the Department, as part of the decision explaining the reason for the denial, reference the applicable standard(s).

The proposed standards are objective in nature but, at the same time, are flexible enough to allow the NASD the discretion it needs to properly assess membership matters. By identifying the proper criteria for admission, the new rules should help ensure that applicants are not required to satisfy criteria not enumerated in the NASD's rules. In addition, these objective standards will facilitate the Commission's ability to evaluate NASD decisions appealed to it.

3. Business Restrictions

In the 21(a) Report, the Commission found that the NASD had, in certain instances, placed improper restrictions on certain members' activities as a condition of membership [163] and prevented certain members from seeking modifications to their restriction agreements.[164] The NASD's current rules regarding the modification or removal of business restrictions are very open-ended. They simply state that members may file a written request that will be reviewed by a subcommittee designated by the District Committee for the District in which the member currently has its principal place of business. There are no set time frames within which the NASD must act. In addition, the subcommittee is only required to consider the circumstances that gave rise to the imposition of the restrictions, the operations of the member since the imposition of the restrictions, and any new evidence submitted in connection with the member's request.

In contrast, the proposal sets forth a detailed procedure for applying for the removal or modification of a business restriction: it grants applicants seeking to modify or remove previously imposed business restrictions the same procedural rights accorded applicants seeking membership.[165] In addition, the NASD will apply the same standards used for evaluating new membership

conducted for supervisors and assistant directors, a comprehensive training program is being finalized for District Office examiners, and a staff steering committee chaired by an NASD Regulation vice president and staffed by senior District Office staff members is finalizing detailed procedures for District Offices to follow to help ensure uniformity and consistency.

[157] The NASD has represented, as described previously, that it has taken steps to ensure an appropriate degree of consistency and uniformity will exist. For example, the NASD indicated that it will require memoranda or public offering documents as information describing the risk to the applicant's capital.

[158] Colish Letter, *supra* note 9, at 4.

[159] Proposed Rule 1014(d)(3).

[160] SEC Order, *supra* note 10. For example, the NASD considered adopting a guideline to deny membership to:

Owners, control persons, or principal officers who have been recently employed by a known SOES activist and who have indicated an interest in being a SOES activist themselves. This interest would be evidenced by conducting business predominately on a retail agency basis and the request to have pieces of equipment with SOES capabilities that is close in number to the registered representatives that the firm intends to employ.

Although not adopted as an official policy of the NASD, the supervisor of the PMI section of District 10 applied this particular SOES-related guideline to new applicants along with other guidelines in identifying issues for the PMI Subcommittee to consider. 21(a) Report, *supra* note 10, at A–72.

[161] Current Rule 1011(c)(1)–(6).

[162] Proposed Rule 1014(a)(1)–(13). One commenter opined that the standards contained in proposed Rule 1014(a)(8) and proposed Rule 1014(a)(9) are redundant. Although the subject area for both standards is similar, the source for comparison differs. Proposed Rule 1014(a)(8) requires the NASD to compare an applicant's compliance, supervisory, operational, and internal control practices and standards to those practices and standards employed by other firms in the securities industry. Proposed Rule 1014(a)(9), on the other hand, requires the NASD to evaluate these practices and standards in light of the requirements of the federal securities laws, the rules and regulations thereunder, and the rules of the NASD.

[163] For example, the PMI Subcommittee curtailed the ability of certain firms to use the SOES system. The NASD expressly conditioned membership on certain firms' acceptance of substantial limitations on their SOES trading activity. These restrictions included, in certain circumstances, outright prohibitions on the use of SOES, limitations on the number of SOES terminals available to a firm, and restatement of the order splitting and professional trading account rules in the membership agreement. 21(a) Report, *supra* note 10, at A–74.

[164] The Commission noted in the 21(a) Report that the NASD had applied an informal policy of preventing firms from seeking modifications of any restrictions by conditioning membership on the requirement that the firm forbear from seeking modifications for six months to one year, notwithstanding that the NASD's rules permitted a firm to seek a modification at any time. 21(a) Report, *supra* note 10, at A–75.

[165] For example, the Department must respond to requests for modification or removal of business restrictions within certain time frames. *See supra* Section IV.A.1 for a general discussion of the time frames and appellate procedure. *See also* proposed Rule 1017 (setting forth the procedure for seeking a modification or removal of a business restriction).

applications to such requests.[166] Finally, the proposed rule change contains a provision that requires the Department to modify or remove a restriction on its own initiative if the Department determines such action is appropriate.[167]

The Commission believes the detailed procedures contained in the proposed rule change will provide both applicants and the NASD greater guidance with regard to processing requests to modify or remove business restrictions. The establishment of uniform standards by which such requests will be evaluated, combined with the NASD's new training procedures and establishment of a staff steering committee, will help ensure national uniformity and consistency in the treatment of such applications.

B. Changes to the Investigations and Sanctions Rules

For the reasons discussed below, the Commission believes the proposed change to the Rule 8000 Series regarding investigations and sanctions should provide fair and efficient procedures. The Commission also believes that the proposed change is consistent with Section 15A of the Act, and in particular, with Sections 15A(b)(6)[168] and 15A(b)(9)[169] of the Act. Further, the Commission believes the proposed change to the procedures governing investigations and sanctions is reasonably taken in furtherance of and is consistent with the Undertakings.

Undertaking 4 requires the NASD ''[t]o provide[] for the autonomy and independence of the regulatory staff of the NASD and its subsidiaries such that the staff, subject only to the supervision of the Board of Governors of the NASD and the Boards of Directors of NASDR and Nasdaq * * * has sole discretion as to what matters to investigate. * * *''[170] In addition, Undertaking 5 requires that the NASD ''promulgate and apply on a consistent basis uniform standards for regulatory and other access issues * * * and institute safeguards to ensure fair and evenhanded access to all services and facilities of the NASD.''[171]

The Rule 8100 Series currently governs complaints against NASD members. Authority permitting the NASD to investigate a member's books and to require a member or associated person to provide information in connection with an investigation or proceeding conducted by the NASD is presently provided by the Rule 8200 Series. The Rule 8200 Series also currently gives the NASD the authority to suspend members or associated persons who do not comply with the Rule 8200 Series. Finally, the Rule 8300 Series provides for sanctions against members and persons associated with members for violations of NASD Rules.

The NASD proposes to amend the Rule 8000 Series to reflect the proposed changes to the Rule 9000 Series, discussed in detail below,[172] and to clarify and enhance the certain provisions. The Commission finds that these clarifying changes and procedural enhancements to the Rule 8000 Series are appropriate and reasonable. In the Commission's view, these changes should improve the current Rule 8000 Series, and provide fair and efficient procedures for investigation and sanction proceedings. For example, the Commission believes that the inclusion of a provision in the proposed Rule 8000 Series that requires that any decision to impose a suspension under the series must state the grounds for the suspension and the conditions for terminating the suspension will promote uniformity.

In addition, the NASD has also proposed changes to the Rule 8100 Series, eliminating the ability of any person who believes he or she has been aggrieved by any act of any member or associated person to initiate formal disciplinary proceedings pursuant to current Rule 8120. The Commission notes that, as discussed below, the NASD has proposed substantial enhancements to the disciplinary process.[173] For example, the NASD has proposed to implement staff-initiated disciplinary proceedings, to enhance the arbitration process, and to institute an expanded and independent NASD internal review function, including an Ombudsman Office.

As a result of these changes to the NASD's disciplinary process, the Commission believes it is no longer necessary to permit ''aggrieved persons'' the right to invoke NASD processes to institute formal disciplinary actions. The Commission notes that the NASD has acknowledged its responsibility as an SRO to give due consideration to complaints by members, associated persons, or members of the public who bring forth information suggesting wrongdoing. Further, the NASD has stated it recognizes its duty to investigate and to determine whether its disciplinary process should be invoked. In addition, the Commission notes that the NASD has proposed to add a provision to the Delegation Plan requiring NASD Regulation to establish internal procedures for considering complaints by members, associated persons, and members of the public who request an investigation or disciplinary action by the NASD.[174] The procedures established under this provision would involve regular oversight by NASD Internal Review. Finally, the Commission notes that no other SRO has a similar rule permitting ''aggrieved persons'' to institute disciplinary proceedings.

The Commission also believes that the proposal to delete Rule 8130, which currently authorizes the DBCCs to file complaints, is in furtherance of Undertaking 4. As noted in the discussion of the disciplinary process below,[175] pursuant to Undertaking 4, the DBCCs will no longer have authority to issue complaints. The Commission believes that the proposed deletion of current Rule 8130 is a reasonable means to address the findings of the Commission's 21(a) Report and is consistent with the Undertakings, particularly with Undertaking 4.

As discussed above, one commenter noted that proposed Rule 8210 did not differentiate between requests for information to parties, as opposed to non-parties. The NASD declined to modify Rule 8210 in response to this comment. The Commission notes that parties and non-parties subject to Rule 8210 requests are NASD members or associated persons, and therefore have submitted themselves to the jurisdiction of the NASD. Therefore, the Commission believes it is reasonable for the NASD not to differentiate in Rule 8210 between requests to parties and requests to non-parties. The Commission also believes that the NASD's interpretation of proposed Rule

[166] Proposed Rule 1017(e)(1)(A)(requiring the NASD to utilize the standards set forth in proposed Rule 1014 when evaluating a request to modify or remove a business restriction).

[167] Proposed Rule 1017(h). The Commission noted in the 21(a) Report certain instances where the NASD retained Professional Trading Account restrictions in membership agreements as much as 18 months after those rules were repealed. 21(a) Report, *supra* note 10, at n.203.

[168] 15 U.S.C. § 78*o*–3(b)(6).

[169] 15 U.S.C. § 78*o*–3(b)(9).

[170] Undertakings, *supra* note 15.

[171] Undertakings, supra note 15.

[172] *See infra* discussion of the disciplinary proceedings in Section IV.C.1.

[173] *See infra* discussion of the disciplinary proceedings in Section IV.C.1.

[174] NASD Regulation currently logs, tracks, and investigates all customer complaints through the NASD's long-standing customer complaint program. The NASD has proposed to amend Section II.A.1.f. of the Delegation Plan to specify that NASD Regulation will establish procedures to consider requests by members, associated person, and members of the public that NASD Regulation initiate formal disciplinary action. *See* Securities Exchange Act Release No. 38909 (Aug. 7, 1997).

[175] *See infra* discussion of the disciplinary proceedings in Section IV.C.1.

9146, which permits a hearing officer to issue a protective order upon the motion of a party or other person, is a reasonable means to enable parties and non-parties to limit the use of materials submitted in a disciplinary proceeding.

Further, the commenter requested that reference to the existence of payment plans available to members for the payment of fines, sanctions or costs be included in the Code of Procedure. The Commission notes that although neither Rule 8320 nor the Code of Procedure specifically address the availability of payment plans, the NASD has confirmed that it will inform its members of the existence of payment plans through the inclusion of information regarding installment plans in the NASD's Sanctions Guidelines, which are publicly available.

In conclusion, the Commission finds that proposed Rule 8000 Series is consistent with the Act, and should enhance both the fair and efficient operation of the NASD's disciplinary proceedings and the dispassionate application of the rules and fairness in the NASD's disciplinary process, as well as other regulatory activities.

C. Changes to the Code of Procedure

1. Disciplinary Proceedings

For the reasons discussed below, the Commission believes that the proposed changes regarding the disciplinary proceedings are consistent with the Act, improve the current system, and should provide fair and efficient procedures to address disciplinary matters. The Commission also believes that the proposed rule change is consistent with Section 15A of the Act, and in particular, with Sections 15A(b)(6) [176] and 15A(b)(8) [177] of the Act.

(a) *How disciplinary proceedings are initiated.* The Commission believes that the proposed rule change, which removes the authority to authorize and issue a complaint from the District Committees, the Market Regulation Committee, and the NBCC, and places it solely on the Department of Enforcement of NASD Regulation, is reasonably taken in furtherance of and is consistent with Undertaking 4 in the SEC Order.[178]

Pursuant to the NASD's Undertakings in the SEC Order, the NASD has agreed to ''provide for the autonomy and independence of the regulatory staff of the NASD and its subsidiaries such that the staff * * * has sole discretion as to what matters to investigate and prosecute, * * *, [ ] and is generally insulated from the commercial interests of its members and the Nasdaq market.'' [179] In particular, under the proposed rules, only the Department of Enforcement of NASD Regulation will be permitted to authorize and issue complaints. In addition, the Department of Enforcement may be directed to authorize and issue a complaint by the NASD Regulation Board or the NASD Board.

To further provide the desired level of autonomy to its regulatory staff, and to address the Commission's conclusion in the 21(a) Report that District Committees were granted overly-broad discretionary authority, the NASD proposes to eliminate the District Committees' involvement in the disciplinary process. Under the revised procedures, the District Committees will no longer have the authority to initiate disciplinary proceedings or to authorize the NASD's staff recommendation to initiate a disciplinary proceeding, nor will they have the ability to veto NASD staff enforcement recommendations. Even more significant, the District Committees will no longer serve as adjudicative bodies, which historically have provided certain segments of the NASD membership with a disproportionate role in the self-regulatory process.[180] They will no longer serve as evidentiary hearing panels for disciplinary proceedings, issue final decisions, or review or approve final decisions. The District Committees' only disciplinary role will be to serve as a pool of persons from which two of the three hearing panelists are selected.

Moreover, the NASD's proposed changes to the Market Regulation Committee's responsibilities and duties in the disciplinary process address the Commission's conclusion in the 21(a) Report that the Market Surveillance Committee (now the Market Regulation Committee) inappropriately performs a grand jury function with respect to disciplinary actions proposed by the NASD's Market Surveillance Department.[181] Under the proposed changes, like the District Committees, the only disciplinary role for the Market Regulation Committee will be to serve as a pool of panelists to serve on a hearing panel or, if applicable, an extended hearing panel. A person who currently serves or who has previously served (not earlier than four years before the date the complaint was served upon the respondent) on the Market Regulation Committee who is associated with an NASD member, or retired therefrom may be chosen to serve as one of the panelists on a hearing panel or an extended hearing panel when the complaint alleges at least one cause of action involving a violation of a statute or a rule within the scope of proposed Rule 9120(r).[182]

One commenter expresses concern that the Department of Enforcement may be able to ''pre-select'' panelists from the Market Regulation Committee (current or former members) by alleging at least one violation set forth in proposed Rule 9120(r), thereby affecting the selection process.[183] The Commission agrees with the NASD's view that proposed Rule 9120(r) does not intend to place all federal and state securities laws, rules, and regulations under the advisory jurisdiction of the Market Regulation Committee. A current or former member of the Market Regulation Committee will serve on a panel only when the matter relates to certain subjects, including: quotations of securities; execution of transactions; reporting of transactions; and trading practices.

In the Commission's view, by limiting the role of the District Committees and Market Regulation Committee, while providing the Department of Enforcement with the autonomy and independence to authorize and issue complaints, the professional staff of NASD Regulation should be able to implement a vigorous and evenhanded enforcement program. Moreover, the Commission believes that this shift of authority in the complaint process should ensure that member participation and peer review is preserved, while eliminating problematic aspects of the disciplinary process identified in the 21(a) Report.

(b) *The role of the Hearing Officer and Hearing Panel.* The Commission also believes the proposed change allowing the recently established Office of Hearing Officers to preside over all formal NASD disciplinary proceedings is reasonably taken in furtherance of and is consistent with the Undertaking 3 in the SEC Order. Specifically, in Undertaking 3 in the SEC Order, the NASD agreed to ''institute the participation of professional hearing officers (who shall be attorneys with appropriate experience and training) to preside over disciplinary proceedings.'' [184]

[176] 15 U.S.C. § 78*o*–3(b)(6).

[177] 15 U.S.C. § 78*o*–3(b)(8).

[178] Undertakings, *supra* note 15.

[179] Undertakings, *supra* note 15.

[180] 21(a) Report, *supra* note 10, at 35 n.91 and accompanying text.

[181] 21(a) Report, *supra* note 10, at 35 n.91.

[182] *See supra* note 23.

[183] ABA Letter, *supra* note 9, at 75.

[184] SEC Order, *supra* note 10. *See also* Undertakings, *supra* note 15.

This undertaking was made in response to the Commission's conclusions in the 21(a) Report that the NASD did not adequately guard against the influence of particular segments of its membership over its regulatory functions and processes. For example, the Commission concluded in the 21(a) Report that market makers had exerted substantial influence over the administration of the NASD's disciplinary process. The Commission concluded that market makers' influence over the NASD, which constituted a majority of the District Committees and the former Market Surveillance Committee, resulted in heightened enforcement of SOES activity, and lax enforcement of the firm quote obligations, trade reporting rules, and excused withdrawal rules.[185]

NASD Regulation has responded to the Commission's concerns by establishing the Office of Hearing Officers as an independent office within NASD Regulation. All litigated disciplinary proceedings will be decided by a panel composed of one hearing officer and two panelists, *i.e.*, the two securities industry representatives. Hearing panel decisions are not subject to review by the District Committees or the Market Regulation Committee. Once a hearing panel has ruled, the decision is subject to review by the NBCC, and the Boards of the NASD Regulation and NASD.

The hearing officer, who is assigned to a disciplinary proceeding by the chief hearing officer, presides over all matters relating to the proceeding. The hearing officer, among other things, considers all procedural and evidentiary matters, discovery requests, and other non-dispositive matters. The hearing officer presiding over a particular disciplinary proceeding also has the authority to impose discretionary sanctions for violations of an order issued by the hearing officer, hearing panel or, if applicable, extended hearing panel, or for other contemptuous conduct during any stage of the disciplinary proceeding.

One commenter believes that to avoid the perception of unfairness and bias, the Office of Hearing Officers should report to the President of the NASD, rather than to the President of NASD Regulation.[186] The Commission believes, however, that the NASD has reasonably addressed the commenter's concern by implementing various measures, as highlighted above, to assure the independence of the chief hearing officer and the hearing officers.[187]

The Commission believes the establishment of an office of professional hearing officers, with the appropriate legal training, should enhance the dispassionate application of the rules and fairness in the disciplinary process. Moreover, the Commission believes that because industry representatives will continue to be represented on each hearing panel, their market expertise will continue to provide a central role in the disciplinary process.[188]

(c) *Ex parte communications prohibited.* Proposed Rule 9143 defines and prohibits *ex parte* communications between the disciplinary panels and the Parties or their representatives. In the Commission's view, it is reasonable for the NASD to prohibit *ex parte* communications between the disciplinary panels and the parties or their representatives during the disciplinary proceedings. The Commission also believes that the boundaries set by the NASD in the *ex parte* communication rule should help to ensure that no party can unfairly advance his or her position in a disciplinary proceeding through discussions outside of the proceeding's forum.

In addition, the Commission believes the parties subject to the prohibition on *ex parte* communications include those who reasonably would be expected to participate in a disciplinary proceeding. Specifically, the parties defined in Rule 9120(v), persons identified with such parties,[189] an adjudicator, as defined in Rule 9120(a), and persons identified with such adjudicator, are subject to the *ex parte* communication rule.[190]

The Commission also believes it is reasonable to establish an objectively determinable point in time when the prohibition of *ex parte* communications commences. Specifically, the prohibition applies upon ''the authorization of a complaint * * * unless the person responsible for the communication has knowledge that the complaint will be authorized, in which case the prohibitions shall apply beginning at the time of his or her acquisition of such knowledge.'' [191] The proposed rule also indicates that in no case shall the prohibition begin to apply later than the time at which a proceeding is noticed for hearing. The Commission recognizes the importance of providing parties and adjudicators and those associated with each group with an identifiable point in time that the prohibition begins. Accordingly, the Commission believes that the NASD's proposed standard reasonably provides those relevant groups with adequate notice of their obligations under this rule.

In the Commission's view, it is also reasonable for a respondent (or potential respondent) to be deemed to have waived his or her protections under the *ex parte* communications prohibition if: (1) a respondent submits an offer of settlement; or (2) a member or a person associated with a member executes an AWC or a MRV. This waiver should help to ensure that the disciplinary process operates efficiently by providing all persons involved in the settlement process or the pre-complaint resolution process with the flexibility to attempt to dispose of a disciplinary matter.

(d) *Motions practice, discovery, and pre-hearing procedures.* The Commission believes it is reasonable for the NASD to establish a formal motions practice in the Code of Procedure. The general provisions governing motions practice are set forth in proposed Rule 9146. The Commission notes that the establishment of a formal motions practice in NASD disciplinary proceedings provides a framework for parties to move for various forms of relief including, but not limited to, a more definite statement; summary disposition; recusal or disqualification of an adjudicator; and leave to introduce additional evidence. The Commission believes the establishment of a formal motion practice should enhance the fair and efficient operation of the disciplinary proceedings.

The Commission also believes that the NASD's proposed discovery provisions

[185] 21(a) Report, *supra* note 10, at 35–39.

[186] ABA Letter, *supra* note 9, at 39–40.

[187] NASD Response, *supra* note 6.

[188] One commenter recommends that at least one person serving as a panelist on a hearing panel or extended hearing panel ''be engaged in similar activities within the securities industry as the respondent.'' ABA Letter, *supra* note 9, at 67. The Commission agrees with the NASD's view that in order to avoid selecting a panelist with a conflict of interest or bias, ''expertise'' should not be considered as the only factor in the selection process.

[189] Each group consists of at least a party, and his or her counsel or representative. In disciplinary proceedings, the relevant group includes the respondent or the several respondents (each a member firm or an associated person), and counsel or representatives. The Department of Enforcement, and Interested Association Staff, as defined in Rule 9120(q) is subject to the *ex parte* prohibition.

[190] The adjudicatory group that is prohibited from making or receiving prohibited communications includes the adjudicator and any person, such as a law clerk or other person, who is engaged in advising the adjudicator, including a Governor, a Director or an adjudicator who is participating in a decision with respect to that proceeding, or [to] an NASD employee who is participating or advising in the decision of a Governor, a Director, or an adjudicator with respect to that proceeding.

[191] Proposed Rule 9143.

reasonably address the need for respondents subject to a disciplinary proceeding to have broader documentary discovery rights.[192] Specifically, proposed Rules 9251 through 9253 provide for the discovery of non-privileged and otherwise unprotected documents by respondents in a disciplinary proceeding. Under the proposed rules, a respondent has a right to obtain certain documents and the right to insist upon their production based upon a schedule set forth in the rules.[193] The Commission notes that the proposed discovery rules should help to ensure that a respondent will receive nonprivileged and otherwise unprotected documents in advance of the initial hearing (or soon thereafter if the Department of Enforcement received the requested document after the commencement of the hearing).

In addition, the Commission believes it is reasonable for the Department of Enforcement to withhold a document that is privileged, constitutes attorney work product, is an examination or inspection report, is an internal memorandum or writing prepared by NASD staff that will not be offered in evidence, or is correspondence between the NASD and state, federal, or foreign regulatory authority or an SRO.[194] Under such circumstances, the hearing officer may require the Department of Enforcement to submit a list of the documents withheld,[195] and may conduct an *in camera* inspection of any such documents to determine whether they should be produced.

The Commission also believes that the proposed rules regarding pre-hearing procedures should help to ensure that disciplinary proceedings run fairly and efficiently, and should improve the overall quality of the hearing. Specifically, the proposed rules grant the hearing officer discretionary authority to require the parties to participate in pre-hearing conferences or to file a variety of informational materials in advance of the hearing. According to the NASD, these conferences are intended, among other things, to: expedite the disposition of the proceeding; establish procedures to manage the proceeding efficiently; and improve the quality of the hearing through more thorough preparation. In the Commission's view, effective planning and increased control over the proceeding by the hearing officer during the pre-hearing phase should provide for a more fair and efficient disciplinary process.

(e) *Pro se respondents.* The Commission recognizes that the enhanced procedural requirements and protections set forth in the disciplinary procedures should improve the fairness and efficiency of a disciplinary proceeding, but could disadvantage some *pro se* respondents. In response to the Commission's concerns, the NASD has represented that, through the NASD Regulation's Office of Dispute Resolution and the chief hearing officer, it is committed to providing a fair forum for all parties. Accordingly, the chief hearing officer and all hearing officers will adopt as a practice the flexible approach of state and federal judicial proceedings. *Pro se* respondents will be granted waivers from certain procedural requirements[196] or otherwise be excused from fully or partially complying with certain procedural or technical rules to the extent that the adjudicator may allow, while continuing to: (i) Provide fair notice to other parties of the issues before the adjudicator; (ii) provide the parties an opportunity to respond to the issues; and (iii) establish and maintain a record for any appeal of the matter. The Commission believes that this approach should provide a fair method in which to promote the efficient administration of disciplinary proceedings with respect to *pro se* respondents.

(f) *Offers of settlement, AWCs, MRVs.* The Commission believes that the NASD has proposed a reasonable framework in governing the settlement of cases prior to the filing of a complaint, and the settlement procedures after a complaint has been filed. Specifically, an AWC is a letter that a person or a member agrees to execute to resolve a potential disciplinary matter in a pre-complaint environment. An MRV is a letter that a person or a member agrees to execute to resolve a potential disciplinary matter prior to the issuance of a complaint.[197] Finally, an offer of settlement is an offer made by a respondent in order to resolve the matter prior to the issuance of a decision on the merits. The Commission notes that current provisions governing each of these proceedings have been substantially incorporated into the proposed Code of Procedure.

Because AWCs, MRVs, and offers of settlement are executed voluntarily by a respondent, or a person about to be named as a respondent, the NASD also proposes to require, before going forward with such procedures, a party (or a potential party) to agree to waive the protections offered against *ex parte* communications and the separation of functions provisions in proposed Rule 9144. As noted above, the Commission recognizes that this waiver should help to ensure that the disciplinary process operates efficiently by providing all persons involved in the settlement process or the pre-complaint resolution process with the flexibility to attempt to dispose of a disciplinary matter. The Commission notes, however, that if the AWC, MRV, or offer of settlement is not accepted by the final adjudicator, the

[192] One commenter suggests that Federal Rule of Evidence 501 (for privilege issues) and Federal Rule of Civil Procedure 26(b)(3) (for work-product immunity issues) should be used as a model. ABA Letter, *supra* note 9, at 89–90. The Commission believes that it is reasonable for the NASD to decide not to incorporate these rules into the Code of Procedure. The Commission agrees with the NASD's view that it must provide a fair process but is not limited by the specific evidentiary rules relating to privilege in the Federal Rules of Evidence and the Federal Rules of Civil Procedure.

The commenter also suggests that the right to an interlocutory appeal should be available to contest any ruling denying a claim of attorney-client privilege or work-product privilege. ABA Letter, *supra* note 9, at 46–48. The Commission agrees with the NASD's view that privilege issues are very important, but to grant interlocutory review as a right regarding every contested privilege issue would impede the effective operation of the SRO adjudicatory process.

[193] One commenter believes that the proposed discovery rule should not include a standard regarding materiality and relevance in the post-complaint time frame. ABA Letter, *supra* note 9, at 85. The Commission believes that it is reasonable for the NASD to subject a secondary production of documents to a material relevance standard so that the Department of Enforcement is not forced to turn over documents that are not relevant to the proceeding initiated and may relate to a potential, but yet-to-be named respondent as part of the same investigation file.

[194] One commenter believes that the only documents that the staff should be able to withhold are privileged documents or documents constituting attorney work product. ABA Letter, *supra* note 9, at 89–90. The Commission believes that the NASD's proposed discovery provisions should both protect a respondent's discovery rights, while ensuring that the NASD's enforcement efforts are not impaired.

[195] One commenter believes that the enforcement staff should be required to provide a list of all documents it obtains to the respondent, and the hearing officer, not the enforcement staff, should make determinations of relevance. ABA Letter, *supra* note 9, at 85. The Commission agrees with the NASD' view that it would be inappropriate to mandate a withheld document list in every case because it might enable a reader to trace the course of an investigation, forcing improper disclosure about the investigation and the investigatory process in circumstances that could impede a continuing investigation of another member or associated person. Moreover, the Commission believes that the NASD has proposed a reasonable standard in proposed Rule 9251(c) under which a respondent may move to require the Department of Enforcement to produce a list of documents withheld if the motion is based upon ''some reason to believe that a document is being withheld in violation of the Code.'' Amendment No. 3, *supra* note 6.

[196] For example, the NASD states that in certain circumstances it would be appropriate to excuse a *pro se* respondent from complying with certain requirements in Rule 9146 regarding motions practice.

[197] Proposed Rule IM–9216 (listing those specific types of violations appropriate for disposition under the minor rule violations plan).

rejected document does not constitute a part of the record in any proceeding. In addition, the NASD proposes to allow the NBCC to delegate authority to the General Counsel of NASD Regulation to accept or refer to the NBCC for its consideration AWCs, MRVs, and uncontested offers of settlement. Further, the NASD proposes to allow the NBCC to delegate to the Chair and the Vice Chair of the NBCC the authority to accept or reject such AWCs, MRVs, and offers of settlement. A contested offer of settlement and order of acceptance may be accepted or rejected only by either the full NBCC or the Chair and Vice Chair, as provided in proposed Rule 9270(f)(2). The Commission believes that these delegation provisions should help to allow the NBCC to concentrate on contested disciplinary matters and those matters raising policy questions.

(g) *NBCC and NASD Regulation/NASD Board Review.* In the Commission's view, the call for review and appellate process set forth in the proposed Rule 9300 Series provide a reasonable interim system for reviewing lower-level decisions. As noted above, the NASD Board has recently approved a subsequent corporate restructuring, which will, in part, eliminate the additional NASD Regulation Board layer of review. The NASD proposed rules provide the NBCC the authority to review any disciplinary proceeding for which a first or ''trial-level'' decision has been rendered. Also, a respondent or the Department of Enforcement may appeal to the NBCC any ''trial-level'' decision, including a default decision.[198] The Commission believes that it is appropriate for the Department of Enforcement staff to determine whether an appeal should be filed.

In addition, the NBCC's decision whether to call a case for review rests with an NBCC Review Subcommittee. The two to four person Review Subcommittee must be composed of current members of the NBCC, and must include a balance of non-industry Directors and industry Directors, or, if not balanced, shall include a majority of non-industry Directors. Also, the General Counsel of NASD Regulation, by delegation of the authority of the NBCC, may determine if a default decision issued pursuant to Rule 9269 should be reviewed by the NBCC.

The NBCC subcommittees and extended proceeding committees act as the appeal forum and recommend decisions to the full NBCC in writing not later than seven days before the meeting of the NBCC at which the disciplinary proceeding is considered. At the same time, all other Directors who sit on the NASD Regulation Board also receive the written recommended decision. After considering all matters presented in the appeal or review, the written recommended decision of the subcommittee (or, if applicable, the extended proceeding committee), and after reaching its conclusions on the issues, the NBCC prepares a proposed written decision.[199] The proposed written decision of the NBCC may be called for review by, respectively, any Director of the NASD Regulation Board, and any Governor of the NASD Board. The opportunity for a Director or Governor to call a case for review occurs sequentially. In the Commission's view, these procedures should provide an efficient, fair, and balanced framework for reviewing lower-level decisions.

(h) *Recusal or disqualification.* The Commission believes that the NASD has proposed a reasonable standard under which an adjudicator must recuse him or herself or may be disqualified by motion. Specifically, the standard (as set forth in proposed Rules 9160, 9233, 9234, and 9332) is ''a conflict of interest or bias, or circumstances otherwise exist where the * * * [Adjudicator's] fairness might reasonably be questioned.'' The NASD sets forth in the rules the various persons or groups that may act as an adjudicator and therefore would be subject to disqualification or recusal procedures. Specifically, Governors, Directors, members of the NBCC and certain subcommittees, panelists of hearing panels or extended hearing panels, hearing officers, and members of the staff of the Department of Member Regulation are subject to possible disqualification under the standard set forth above.

One commenter recommends that proposed Rule 9160 regarding recusal or disqualification set forth procedural steps that must be followed in seeking disqualification of Governors, Directors, NBCC Committee members, and certain NASD Regulation staff when serving an adjudicatory role.[200] The Commission agrees with the NASD's view that additional procedures are unnecessary because an adjudicator will recuse him or herself when he or she has a conflict of interest or a bias, and other members of a board or committee have the ability to suggest recusal or seek disqualification if the member does not act promptly to recuse him or herself.

The same commenter also proposes that the right to an interlocutory appeal should be available to contest any situation in which a panelist refuses to recuse him or herself. The Commission agrees with the NASD's view that the right of an interlocutory appeal is unnecessary because (1) a party may challenge the panelist through a disqualification motion; and (2) persons other than parties may inform the chief hearing officer or hearing officer of disqualifying factors, providing another avenue to remove a panelist from a hearing panel.[201]

The Commission also notes that clarity in this area is highly desirable because the proposed rule allows the Chairs and Vice Chairs of the NBCC, and the respective Chairs of the NASD and NASD Regulation Boards to order the disqualification of their competitors sitting on the applicable boards, committees, and subcommittees. The Commission believes the standard set forth in the rules should provide a reasonable framework in which to make such determinations.

(i) *Contemptuous conduct.* The Commission believes that it is appropriate for the NASD to allow for sanctions for conduct that violates orders of a hearing officer, a hearing panel or, if applicable, an extended hearing panel, and for other contemptuous conduct during a hearing. Specifically, the hearing officer, hearing panel or, if applicable, an extended hearing panel, can sanction contemptuous conduct by ruling, among other things, that: the subject matter of the violated order or any other designated facts be taken as established for purposes of the proceeding; the violator or contemptuous party be precluded from supporting or opposing certain claims or defenses, or precluded from introducing evidence on certain

[198] A respondent may not ''appeal'' any final action contained in an AWC, an MRV or an offer of settlement that has been accepted by any of the General Counsel of NASD Regulation, the Chair and the Vice Chair of the National Business Conduct Committee, or the National Business Conduct Committee (proposed Rules 9216 (a) and (b), and 9270).

[199] Specifically, the decision must include:

(1) a statement describing the investigative or other origin of the disciplinary proceeding;

(2) the specific statutory or rule provisions that were alleged to have been violated;

(3) a statement setting forth the findings of fact with respect to any act or practice the respondent was alleged to have committed or omitted;

(4) the conclusions as to whether the respondent violated any provision alleged in the complaint;

(5) a statement in support of the disposition of the principal issues raised in the proceeding; and

(6) a statement describing any sanction imposed, the reasons therefore, and, pursuant to Rule 9360, the date upon which such sanction shall become effective.

Proposed Rule 9349(b) (1)–(6).

[200] ABA Letter, *supra* note 9, at 52.

[201] NASD Response, *supra* note 6, at 10.

matters; and particular pleadings or parts thereof be stricken.

Proposed Rule 9280(b)(2) provides for the imposition of sanctions for a party's unjustified refusal to make disclosures required by the proposed Rule 9240 and 9250 Series, or otherwise required by order of a hearing officer, hearing panel, or, if applicable, an extended hearing panel. Unless the failure to make disclosures is harmless, the recalcitrant party is precluded from using any of the information withheld or the testimony of the witness that was not disclosed as evidence at the hearing, or otherwise relying on such information or testimony. This sanction may be imposed in addition to, or in lieu of, the various restrictions on the conduct of the case authorized by proposed Rule 9280(b)(1). Further, under proposed Rule 9280(c), absent reasonable basis, a party's failure to admit the genuineness of a document that is later found to be genuine may also be subject to the sanctions listed in proposed Rule 9280(b)(1).

Proposed Rule 9280, read in conjunction with proposed Rule 9150, also authorizes a hearing officer, hearing panel, or, if applicable, an extended hearing panel to exclude an offending attorney or person acting in a representative capacity from functioning as such in the particular proceedings. In this regard, proposed Rule 9141(b) also makes clear that the right to representation in a disciplinary proceeding is subject to the power to exclude a party's representative or attorney under proposed Rules 9150 and 9280. Under proposed Rule 9280(c), an attorney or representative who is excluded from participating in a disciplinary proceeding may seek immediate review of the exclusion order by the NBCC by filing a motion to vacate within five days after service of the order. The filing of such a motion operates to stay all aspects of the disciplinary proceeding, pending expedited consideration and a prompt decision by the NBCC. The Commission believes these sanctioning powers provide a reasonable means for these adjudicators to maintain acceptable levels of conduct by the parties and their representatives when participating in a disciplinary proceeding.

2. *Members Experiencing Financial or Operating Difficulties; Summary Suspensions; and Procedures for Exemptions From Certain NASD Rules*

The Commission believes the proposed changes regarding the Rule 9400, 9500 and 9600 Series improve the current procedures and should provide a fair and efficient means to address: (1) Limitations of the activities of members experiencing financial or operational difficulties; (2) summary and non-summary suspension, cancellation, bar, limitation or prohibition on access to NASD services; (3) eligibility; and (4) exemptions from specific NASD rules. The Commission believes the proposed rule change is consistent with Sections 15A(b)(6),[202] 15A(b)(9),[203] and 15A(h)(3)[204] of the Act. The Commission also believes the proposed changes to these procedures are reasonably taken in furtherance of and are consistent with the Undertakings.[205]

Undertaking 4 requires the NASD ''[t]o provide[] for the autonomy and independence of the regulatory staff of the NASD and its subsidiaries such that the staff, subject only to the supervision of the Board of Governors of the NASD and the Boards of Directors of NASDR and Nasdaq * * * has sole discretion as to what matters to investigate * * *.''[206] In addition, Undertaking 5 requires that the NASD ''promulgate and apply on a consistent basis uniform standards for regulatory and other access issues * * * and institute safeguards to ensure fair and evenhanded access to all services and facilities of the NASD.''[207]

In the Commission's view, the proposal should provide an adequate procedural framework for the Rule 9400, 9500, and 9600 Series, enhancing the fair and efficient operation of these rule series. Specifically, the amended proceedings incorporate a great number of procedural improvements that should provide members and persons associated with members clearer, more detailed, and more streamlined procedures for the above-described proceedings.

The Commission notes that, pursuant to proposed Rule 9110, the new Rule 9400 through 9600 Series procedures are governed by the provisions of the Rule 9100 Series, unless a rule specifically provides otherwise. As discussed in detail above in Section IV.C.1, the Rule 9100 Series defines certain terms and addresses notice, service and filing procedures; motions practice; *ex parte* communications; separation of adjudicatory and prosecutorial functions; and disqualification of adjudicators under appropriate circumstances. The Commission believes that it is reasonable for the NASD to establish these provisions for the Rule 9400, 9500, and 9600 Series, because the provisions should enhance the fair and efficient operation of the procedures governing limitations of the activities of members experiencing financial or operational difficulties; summary and non-summary suspension, cancellation, bar, limitation or prohibition on access to NASD services; eligibility; and exemptions from specific NASD rules.

In addition, the Commission believes the revisions and enhancements to the Rule 9400 through 9600 Series procedures should help ensure that participants in the proceedings are aware of their rights and obligations under the Series, and will improve the overall quality of the procedures and their outcomes. Specifically, the procedures under these Series provide for notice to a member or associated person of the grounds or basis for a notice or limitation; the nature of the sanction or limitation; the effective date of such a notice; the consequences of a failure to comply with a notice or the criteria that must be met to have a notice removed (where appropriate); the member or associated person's rights at a hearing; the definition of the record for each proceeding; and the required components of a written decision under these Series. For example, the Rule 9510 Series, governing summary and non-summary suspension procedures, provides for service of notice of a suspension by facsimile or overnight commercial courier to help ensure that the subject of the suspension has adequate time to respond to such a notice within the time-frames established by the series. In addition, the Rule 9400 and 9500 Series provide for the retention of evidence that is proffered but not accepted into the record until the date when the NASD's decision becomes final or, if applicable, upon the conclusion of any review by the Commission or the federal courts.

Further, the rules provide a mechanism for the member or associated person to request and obtain review of a notice issued pursuant to the Rule 9400 and 9500 Series. Each of the Rule 9400 and 9500 Series procedures also provides for a call for review by the NASD Board (and, in most cases, by the NASD Regulation Board as well), under procedures similar to those for disciplinary proceedings under the Rule 9200 and 9300 Series. In addition, the Rule 9400 and 9500 Series require that adjudicatory and prosecutorial functions remain separated,[208] and provide for the disqualification of an adjudicator when there is ''a conflict of

[202] 15 U.S.C. § 78*o*–3(b)(6).

[203] 15 U.S.C. § 78*o*–3(b)(9).

[204] 15 U.S.C. § 78*o*–3(h)(3).

[205] SEC Order, *supra* note 10.

[206] Undertakings, *supra* note 15.

[207] Undertakings, *supra* note 15.

[208] Proposed Rule 9144.

interest or bias, or circumstances otherwise exist where the * * * [adjudicator's] fairness might reasonably be questioned.'' [209]

The proposed Rule 9600 Series is intended to centralize exemptive authority in NASD Regulation staff that is now, pursuant to current rules, delegated to various standing committees. The proposed Rule 9600 Series governing exemptions for certain NASD rules also contains some of the procedural enhancements present in the Rule 9400 and 9500 Series, including service requirements, components of the decision, procedure to appeal a decision and obtain a hearing, and the opportunity to present oral evidence. The Commission notes that applicants for exemptions have a right of appeal, which will be heard by a sub-committee appointed by the NBCC. The decision then issued by the NBCC constitutes final action of the NASD, and will not be subject to a call for review by the NASD Board. The Commission notes that the authority of the NBCC over exemption decisions pursuant to the Rule 9600 Series is a delegation from the NASD Board, leaving the NASD Board ultimately responsible for the fairness of the exemption proceedings and procedures.[210]

The Commission believes that the NASD's proposal to modify the Rule 9400 through 9600 Series is reasonable, and should improve the procedures for limitations of the activities of members experiencing financial or operational difficulties; summary and non-summary suspension, cancellation, bar, limitation or prohibition on access to NASD services; eligibility; and exemptions from specific NASD rules. The Commission believes that the proposed Rule 9400 through 9600 Series will assist the NASD in promulgating and applying on a consistent basis uniform standards for regulatory and other access issues, as well as instituting safeguards to ensure fair and evenhanded access to all services and facilities of the NASD, consistent with the 21(a) Report and the Undertakings. In conclusion, the Commission finds that proposed Rule 9400, 9500 and 9600 Series are consistent with the Act, and should enhance both the fair and efficient operation of the NASD, and the dispassionate and fair application of the rules in the NASD's regulatory activities.

[209] Proposed Rule 9160.

[210] The Commission understands that the fairness of exemption proceedings will be within the scope of responsibility of the NASD Board's Audit Committee.

D. Effectiveness of the Proposed Rules

The NASD has proposed a transition schedule for the procedures approved in this order. In the Commission's view, the schedule proposed by the NASD for implementation as discussed in detail in Section II.D., should help to assist in the transition to the new procedures.

V. Amendment No. 2

The Commission finds good cause for approving Amendment No. 2 prior to the thirtieth day after the date of publication of notice thereof in the **Federal Register**. Specifically, Amendment No. 2 sets forth proposed changes to the proposed Rule 9400 and 9500 Series and proposes to seek approval of the proposed Rule 9600 Series. The Commission notes that Amendment No. 2, which amends the proposed Rule 9400, 9500 and 9600 Series, was noticed and published for the full 21-day comment period, and no comments were received. Further, as discussed above, the Commission believes that the proposed Rule 9400, 9500 and 9600 Series are consistent with the Act, and should enhance both the fair and efficient operation of the NASD's disciplinary proceedings and the dispassionate application of the rules and fairness in the NASD's disciplinary process, as well as other regulatory activities. Finally, the acceleration of the effectiveness of Amendment No. 2 will enable the Commission to approve the proposed Rule 9400, 9500 and 9600 Series concurrent with the other major modifications to the NASD's rules as proposed in SR–NASD–97–28. Therefore, the Commission believes granting accelerated approval to Amendment No. 2 is appropriate and consistent with Section 19(b)(2) of the Act.[211]

VI. Amendment No. 3

The Commission finds good cause for approving Amendment No. 3 prior to the thirtieth day after the date of publication of notice thereof in the **Federal Register**. As noted above, the NASD made several modifications to the disciplinary proceeding rules in Amendment No. 3 to the proposed rule change, including expanding the pool of persons eligible to serve as panelists in a disciplinary proceeding, defining the administrative and ministerial role of the Counsel to the NBCC, providing greater flexibility for an attorney to withdraw from a proceeding with good cause without 30 days notice, and eliminating the right of the Department of Enforcement to move for summary disposition of a disciplinary proceeding. In addition, the proposed changes made to the Rule 8000 Series in Amendment No. 3 were technical, non-substantive amendments. Finally, the NASD made several modifications to the membership application process including adding a requirement that, once approved, a member must return an executed membership agreement within twenty-five days of service of the agreement, inserting language in several sections permitting an applicant and the NASD to modify certain deadlines by agreement, codifying the procedural protections afforded new member applications in the business restrictions section, and certain other clarifying changes.

The Commission believes the NASD's proposed changes in Amendment No. 3 further strengthen and clarify the proposed rule change and raise no new regulatory issues. Further, the Commission believes that Amendment No. 3 does not significantly alter the Original Proposal which was subject to a full notice and comment period. Therefore, the Commission believes that granting accelerated approval to Amendment No. 3 is appropriate and consistent with Section 19(b)(2) of the Act.[212]

VII. Amendment No. 4

The Commission finds good cause for approving Amendment No. 4 prior to the thirtieth day after the date of publication of notice thereof in the **Federal Register**. Specifically, Amendment No. 4 makes several technical non-substantive changes to the proposal such as identifying appropriate cross-references and correcting typographical errors in the Rule 9100–9300 Series of the Code of Procedure. The Commission believes that proposed Amendment No. 4 raises no new regulatory issues. Therefore, the Commission believes granting accelerated approval to Amendment No. 4 is appropriate and consistent with Section 19(b)(2) of the Act.[213]

VIII. Amendment No. 5

The Commission finds good cause for approving Amendment No. 5 prior to the thirtieth day after the date of publication of notice thereof in the **Federal Register**. Specifically, Amendment No. 5 makes a technical change to the proposal, deleting the requirement for signatures of each member of a hearing panel on a disciplinary decision. Further, as discussed in detail above, Amendment

[211] 15 U.S.C. § 78s(b)(2).

[212] 15 U.S.C. § 78s(b)(2).

[213] 15 U.S.C. § 78s(b)(2).

No. 5 describes the effective date for each component of the NASD's proposal. The Commission believes that proposed Amendment No. 5 raises no new regulatory issues. Therefore, the Commission believes granting accelerated approval to Amendment No. 5 is appropriate and consistent with Section 19(b)(2) of the Act.[214]

IX. Solicitation of Comments

Interested persons are invited to submit written data, views and arguments concerning Amendment Nos. 3, 4 and 5 to the proposed rule change. Persons making written submissions should file six copies thereof with the Secretary, Securities and Exchange Commission, 450 Fifth Street, N.W., Washington, D.C. 20549. Copies of the submission, all subsequent amendments, all written statements with respect to Amendment Nos. 3, 4 and 5 that are filed with the Commission, and all written communications relating to Amendment Nos. 3, 4 and 5 between the Commission and any persons, other than those that may be withheld from the public in accordance with the provisions of 5 U.S.C. § 552, will be available for inspection and copying in the Commission's Public Reference Room. Copies of such filing will also be available for inspection and copying at the principal office of the NASD. All submissions should refer to File No. SR-NASD–97–28 and should be submitted by September 3, 1997.

X. Conclusion

For all of the aforementioned reasons, the Commission finds that the proposed rule change is consistent with the requirements of the Act and the rules and regulations thereunder applicable to a national securities association.

It is therefore ordered, pursuant to Section 19(b)(2) of the Act,[215] that the proposed rule change (SR–NASD–97–28) is approved, including Amendment Nos. 2, 3, 4, and 5 on an accelerated basis.

For the Commission, by the Division of Market Regulation, pursuant to delegated authority.[216]

Margaret H. McFarland,

Deputy Secretary.

[FR Doc. 97–21330 Filed 8–12–97; 8:45 am]

BILLING CODE 8010–01–P

[214] 15 U.S.C. § 78s(b)(2).

[215] 15 U.S.C. § 78s(b)(2).

[216] 17 CFR 200.30–3(a)(12).

OFFICE OF THE UNITED STATES TRADE REPRESENTATIVE

Generalized System of Preferences (GSP); Notice Regarding the 1997 Annual GSP Review and Completion of the Expedited Indonesian Melamine Dinnerware Review

AGENCY: Office of the United States Trade Representative.

ACTION: Notice.

SUMMARY: This notice lists the petitions that were accepted for the Annual Generalized System of Preferences (GSP) review for modifications of GSP product eligibility. The dates for hearings on these product reviews and for the submission of comments will be notified later. The expedited review of the GSP eligibility of melamine dinnerware from Indonesia was completed with the decision that denial of continued GSP eligibility was not warranted.

FOR FURTHER INFORMATION CONTACT: GSP Subcommittee, Office of the United States Trade Representative, 600 17th Street, NW, Room 518, Washington, D.C. 20506. The telephone number is (202) 395–6971.

SUPPLEMENTARY INFORMATION:

I. 1997 GSP Product Review

Pursuant to Title V the Trade Act of 1974, (''Trade Act'') (19 U.S.C. 2461 *et seq.*), the GSP program grants duty-free treatment to designated eligible articles that are imported from designated beneficiary developing countries. In a notice dated May 21, 1997, USTR initiated the 1997 Annual GSP Review provided for in the GSP regulations (15 CFR 2007 *et seq.*) and announced a deadline of July 2, 1997 for the filing of petitions requesting modifications in the list of eligible articles (62 **Federal Register** 27828). Petitions may request that products be added or removed from the list of eligible articles or that a country be granted a waiver of ''competitive need limits'' (CNLs) for an eligible article pursuant to section 503(c) of the Trade Act (19 U.S.C. 2464(c)).

The GSP Subcommittee of the Trade Policy Staff Committee (TPSC), after reviewing the product petitions submitted, has decided that the petitions listed in the attached annex should be accepted for consideration in the 1997 Annual GSP Review. The annex sets forth the case number, product identification, the change requested and the petitioner for each product included in the 1997 Annual GSP Review.

The opportunities for public comment on the products under review, including the dates for a public hearing and procedures for participating in the hearing, will be published in a subsequent notice.

II. Expedited Review of Melamine Dinnerware Petition

As part of an expedited review of a petition to suspend GSP eligibility for melamine institutional tableware from Indonesia, USTR requested comments on the petition by July 2, 1997 (62 **Federal Register** 2852). As a result of that review, the GSP TPSC Subcommittee had decided that removal of GSP eligibility was not warranted.

Frederick L. Montgomery,

Chairman, Trade Policy Staff Committee.

BILLING CODE 3901–01–M

Annex

Case No.	HTS Subheading	Article	Petitioner
		[The bracketed language in this Annex has been included only to clarify the scope of the numbered subheadings which are being considered, and such language is not itself intended to describe articles which are under consideration.]	
Part A.		Petitions to add products to the list of eligible articles for the Generalized System of Preferences.	
97-1	0409.00.00	Natural honey	Aegean Livestock, Aqua Products Exporters' Union, Turkey
		Onions, shallots, garlic, leeks and other alliaceous vegetables, fresh or chilled: Onions and shallots: [Onion sets] Other: [Pearl onions not over 16 mm in diameter]	
97-2	0703.10.40	Other	Government of Uruguay
		Dried vegetables, whole, cut, sliced, broken or in powder, but not further prepared: Other vegetables; mixtures of vegetables: Tomatoes	
97-3	0712.90.75(pt.)	Powder	McCormick & Company, Incorporated, Sparks, MD
		Fruit and nuts, provisionally preserved (for example, by sulfur dioxide gas, in brine, in sulfur water or in other preservative solutions), but unsuitable in that state for immediate consumption:	
97-4	0812.10.00	Cherries	Aegean Fresh Fruits and Vegetables Exporters' Union, Turkey
		Tomatoes prepared or preserved otherwise than by vinegar or acetic acid: [Tomatoes, whole or in pieces] Other	
97-5	2002.90.00(pt.)	Powder	McCormick & Company, Incorporated, Sparks, MD
		Polycarboxylic acids, their anhydrides, halides, peroxides and peroxyacids; their halogenated, sulfonated, nitrated or nitrosated derivatives: Acyclic polycarboxylic acids, their anhydrides, halides, peroxides, peroxyacids and their derivatives: Adipic acid, its salts and esters:	
97-6	2917.12.10	Adipic acid	Rhodia S.A., Brazil

Annex (con.)

Case No.	HTS Subheading	Article	Petitioner
Part A.		Petitions to add products to the list of eligible articles for the Generalized System of Preferences. (con.)	
		Synthetic organic coloring matter, whether or not chemically defined; preparations as specified in note 3 to chapter 32 of the Harmonized Tariff Schedule of the United States based on synthetic organic coloring matter; synthetic organic products of a kind used as fluorescent brightening agents or as luminophores, whether or not chemically defined:	
		Synthetic organic coloring matter and preparations based thereon as specified in note 3 to chapter 32 of the Harmonized Tariff Schedule of the United States:	
		Acid dyes, whether or not premetallized, and preparations based thereon; mordant dyes and preparations based thereon:	
		[Articles provided for in subheadings 3204.12.05 through 3204.12.17, inclusive]	
97-7	3204.12.20	Acid black 61, 63, 76, 83, 117, 127, 131, 132, 139, 164, 170, 177, 183, 188, 194, 199, 211; Acid blue 1, 47, 60, 61, 66, 72, 81, 82, 83, 90, 98, 102, 112, 123, 126, 127:1, 130, 133, 140, 142, 147, 151, 172, 175, 182, 185, 193, 204, 205, 208, 209, 221, 225, 229, 239, 242, 247, 250, 252, 254, 260, 261, 264, 266, 268, 280, 284, 288, 290, 296, 312, 317, 318; Acid brown 10, 11, 12, 30, 33, 45, 50, 52, 68, 83, 85, 100, 101, 103, 104, 105, 106, 126, 127, 147, 158, 160, 161, 162, 163, 165, 180, 191, 224, 226, 227, 235, 237, 239, 248, 266, 267, 270, 276, 282, 283, 289, 290, 291, 298, 304, 311, 314, 315, 321, 322, 324, 325, 330, 331, 355, 357, 358, 359, 360, 361, 362, 384; Acid green 9, 26, 28, 41, 43, 60, 68, 70, 71, 73, 80, 82, 84, 89, 92, 93, 94, 108, 112; Acid orange 3, 19, 28, 33, 43, 47, 61, 86, 89, 92, 94, 102, 107, 126, 135, 142, 144; Acid red 37, 42, 48, 52, 57, 58, 92, 111, 118, 127, 131, 138, 143, 155, 161, 183, 199, 213, 215, 216, 226, 227, 228, 249, 252, 257, 259, 260, 261, 263, 274, 281, 282, 283, 301, 303, 310, 315, 330, 331, 332, 336, 347, 357, 359, 360, 361, 362, 380, 392, 394, 396; Acid violet 9, 34, 36, 47, 66, 75, 80, 90, 103, 109, 111, 121; Acid yellow 7, 35, 64, 70, 72, 96, 98, 111, 127, 136, 155, 167, 183, 184, 194, 195, 199, 218, 221, 223, 227; Copper phthalocyanine-3,3',4,4'-tetrasulfonic acid;	Government of Morocco; Dyechem SA, Morocco

Annex (con.)

Case No.	HTS Subheading	Article	Petitioner
Part A.		Petitions to add products to the list of eligible articles for the Generalized System of Preferences. (con.)	
97-7 (con.)	3204.12.20 (con.)	Copper phthalocyanine-4,4',4'',4'''-tetrasulfonic acid; Dyes containing, by weight-- 24.2 percent Acid Yellow 135, 21.7 percent Acid Orange 51, and 54.1 percent Acid Blue 113;	
		Synthetic organic coloring matter, whether or not chemically defined; preparations as specified in note 3 to chapter 32 of the Harmonized Tariff Schedule of the United States based on synthetic organic coloring matter; synthetic organic products of a kind used as fluorescent brightening agents or as luminophores, whether or not chemically defined (con.): Synthetic organic coloring matter and preparations based thereon as specified in note 3 to chapter 32 of the Harmonized Tariff Schedule of the United States (con.): Acid dyes, whether or not premetallized, and preparations based thereon; mordant dyes and preparations based thereon (con.): Dyes containing, by weight-- 10.1 percent Acid Yellow 64, 11.6 percent Acid Orange 51, 26.3 percent Acid Blue 113, 50.5 percent Acid Black 172, and 1.5 percent Acid Green 25	
97-8	3204.12.30	Mordant black 75; Mordant blue 1; Mordant brown 79; and Mordant red 81, 84	Government of Morocco; Dyechem SA, Morocco
		Other:	
97-9	3204.12.45	Products described in additional U.S. note 3 to section VI of the Harmonized Tariff Schedule of the United States	do.
97-10	3204.12.50	Other	do.
		Prepared binders for foundry molds or cores; chemical products and preparations of the chemical or allied industries (including those consisting of mixtures of natural products), not elsewhere specified or included; residual products of the chemical or allied industries, not elsewhere specified or included: [Articles provided for in subheadings 3824.10.00 through 3824.79.00, inclusive]	
		Other: [Cultured crystals (other than optical elements of chapter 90), weighing not less than 2.5 g each]	

Annex (con.)

Case No.	HTS Subheading	Article	Petitioner
Part A.		Petitions to add products to the list of eligible articles for the Generalized System of Preferences. (con.)	
		Other: Mixtures containing 5 percent or more by weight of one or more aromatic or modified aromatic substances: [Articles provided for in subheadings 3824.90.21 through 3824.90.26, inclusive]	
97-11	3824.90.28	Other	Cargill, Inc., Minneapolis, MN Cargil Nutri-Products, Eddyville,IO; Zaklady Przemyslu, Tluszczowego w Warszawie, Poland
		Gold (including gold plated with platinum) unwrought or in semimanufactured forms, or in powder form: Nonmonetary: [Powder] Other unwrought forms: [Bullion and dore]	
97-12	7108.12.50	Other	Government of South Africa
		Other semimanufactured forms: [Articles provided for in subheadings 7108.13.10 through 7108.13.55, inclusive]	
97-13	7108.13.70	Other	do.
		Titanium and articles thereof, including waste and scrap: Unwrought titanium; waste and scrap; powders: [Waste and scrap]	
97-14	8108.10.50	Other	Government of Russia; Verkhnasaldinskoe Metallurgicheskoe Proizvdstvennoe Ob"edinenie, Russia
		Motor vehicles for the transport of goods: Dumpers designed for off-highway use: [Cab chassis]	
97-15	8704.10.50	Other	Bell Equipment North America, Inc., Garden City, GA; Bell Equipment, Ltd., South Africa

Annex (con.)

Case No.	HTS Subheading	Article	Petitioner
Part B.		Petitions to remove duty-free status from beneficiary developing country/countries for a product on the list of eligible articles for Generalized System of Preferences. 1/	
		Other plates, sheets, film, foil and strip, of plastics, noncellular and not reinforced, laminated, supported or similarly combined with other materials:	
		Of polycarbonates, alkyd resins, polyallyl esters or other polyesters:	
97-16	3920.62.00 (India)	Of polyethylene terephthalate	Hoechst Diafoil Company, Greer, SC

1/ The country named is the beneficiary developing country specified by the petitioner. While the Trade Policy Staff Committee (TPSC) review will focus on that country, the TPSC reserves the right to address removal of GSP status for countries other than those specified by the petitioner as well the GSP status of the entire article.

Case No.	HTS Subheading	Article	Petitioner
Part C.		Petitions for waiver of competitive need limit for a product on the list of eligible products for the Generalized System of Preferences.	
		Fruit and nuts, uncooked or cooked by steaming or boiling in water, frozen, whether or not containing added sugar or other sweetening matter:	
		Raspberries, blackberries, mulberries, loganberries, black, white or red currants and gooseberries (other than kiwi fruit):	
97-17	0811.20.20 (Chile)	Raspberries, loganberries, black currants and gooseberries (other than kiwi fruit)	The Association of Frozen Products Exporters, Chile; Chilean Exporters' Association, Chile; The Chilean Federation of Food Processors and Agribusiness, Chile
		Prepared or preserved fish; caviar and caviar substitutes prepared from fish eggs:	
		Caviar and caviar substitutes:	
97-18	1604.30.20 (Russia)	Caviar	Petrossian Paris, Inc., New York, NY
		Carbides, whether or not chemically defined:	
		[Of calcium; of silicon]	
		Other:	
		[Of boron; of chromium; of tungsten]	
97-19	2849.90.50 (South Africa)	Other	U.S. Vanadium Corp. Danbury, Connecticut

Annex (con.)

Case No.	HTS Subheading	Article	Petitioner
Part C.		Petitions for waiver of competitive need limit for a product on the list of eligible products for the Generalized System of Preferences. (con.)	
		Heterocyclic compounds with nitrogen hetero-atom(s) only; nucleic acids and their salts:	
		Lactams:	
97-20	2933.71.00 (Russia)	6-Hexanelactam (ε-Caprolactam)	Government of Russia; AlliedSignal Inc., Washington, DC; Allied Signal Polymers, Washington, DC; BASF Corporation, Mt. Olive, NJ; Customs Resins, Inc., Wayne, NJ; Polymeric Resources Corp., Wayne, NJ
		New pneumatic tires, of rubber:	
		Of a kind used on motor cars (including station wagons and racing cars):	
97-21	4011.10.10 (Brazil)	Radial	Associacao Nacional da Industria de Pneumaticos, Brazil
97-22	4011.10.50 (Brazil)	Other	do.
		Of a kind used on buses or trucks:	
97-23	4011.20.10 (Brazil)	Radial	do.
97-24	4011.20.50 (Brazil)	Other	do
		Titanium and articles thereof, including waste and scrap:	
		[Unwrought titanium; waste and scrap; powders:]	
		Other:	
		[Articles of titanium]	
97-25	8108.90.60 (Russia)	Other	Government of Russia; Verkhnasaldinskoe Metallurgicheskoe Proizvdstvennoe Ob"edinenie, Russia

[FR Doc. 97–21429 Filed 8–12–97; 8:45 am]
BILLING CODE 3901–01–C

DEPARTMENT OF TRANSPORTATION

Coast Guard

[CGD 97–053]

National Boating Safety Advisory Council; Vacancies

AGENCY: Coast Guard, DOT.

ACTION: Request for applications.

SUMMARY: The Coast Guard is seeking applications for appointment to membership on the National Boating Safety Advisory Council (NBSAC). NBSAC provides advice and makes recommendations to the Coast Guard on matters related to recreational boating safety.

DATES: Applications must reach the Coast Guard on or before October 1, 1997.

ADDRESSES: You may request an application form by writing to Commandant (G–OPB–1), U.S. Coast Guard, 2100 Second Street SW., Washington, DC 20593–0001; by calling 202–267–0950; or by faxing 202–267–4285. Submit application forms to the same address.

FOR FURTHER INFORMATION CONTACT: Mr. Albert J. Marmo, Executive Director of NBSAC, telephone 202–267–0950, fax 202–267–4285.

SUPPLEMENTARY INFORMATION: The National Boating Safety Advisory Council (NBSAC) was established by the Federal Boat Safety Act of 1971. It is a Federal advisory committee constituted under 5 U.S.C. App. 2. NBSAC provides advice and makes recommendations to the Coast Guard regarding regulations and other boating safety matters. The Council consists of 21 members drawn equally from the following sectors of the boating community: State officials responsible for State boating safety programs; recreational boating industry; and national recreational boating organizations and the general public.

NBSAC normally meets twice a year at a location selected by the Coast Guard. When attending meetings of the Council, members are provided travel expenses and per diem.

The Coast Guard will consider applications for the following seven positions that expire or become vacant in December 1997: three representatives of State officials responsible for State boating safety programs; two representatives of the boating industry; and two representatives of national recreational boating organizations and from the general public. Applicants are considered for membership on the basis of their expertise, knowledge, and experience in recreational boating safety. Each member serves for a term of 3 years unless filling an unexpired term. A few members may serve consecutive terms.

In support of the policy of the Department of Transportation on gender and ethnic diversity, the Coast Guard encourages applications from qualified women and members of minority groups.

Applicants selected may be required to complete a Confidential Financial Disclosure Report (OGE Form 450). Neither the report nor the information it contains may be released to the public, except under an order issued by a Federal court or as otherwise provided under the Privacy Act (5 U.S.C. 552a).

Dated: August 7, 1997.

James D. Hull,

Rear Admiral, U.S. Coast Guard, Director of Operations Policy.

[FR Doc. 97–21357 Filed 8–12–97; 8:45 am]

BILLING CODE 4910–14–M

DEPARTMENT OF TRANSPORTATION

Federal Aviation Administration

Notice of Intent To Rule on Application To Impose and Use the Revenue From a Passenger Facility Charge (PFC) at Martha's Vineyard Airport, Vineyard Haven, Massachusetts

AGENCY: Federal Aviation Administration (FAA), DOT.

ACTION: Notice of Intent to Rule on Application.

SUMMARY: The FAA proposes to rule and invites public comment on the application to impose and use the revenue from a Passenger Facility Charge at Martha's Vineyard Airport under the provisions of the Aviation Safety and Capacity Expansion Act of 1990 (Title IX of the Omnibus Budget Reconciliation Act of 1990) Pub. L. 101–508) and Part 158 of the Federal Aviation Regulations (14 CFR Part 158).

DATES: Comments must be received on or before September 12, 1997.

ADDRESSES: Comments on this application may be mailed or delivered in triplicate to the FAA at the following address:

Federal Aviation Administration, Airports Division, 12 New England Executive Park, Burlington, Massachusetts 01803.

In addition, one copy of any comments submitted to the FAA must be mailed or delivered to Mr. W. Philip Reynolds, at the following address: Airport Manager, RFD–Box 850, Vineyard Haven, Massachusetts 02568.

Air carriers and foreign air carriers may submit copies of written comments previously provided to the County of Dukes County under section 158.23 of part 158 of the Federal Aviation Regulations.

FOR FURTHER INFORMATION CONTACT: Priscilla A. Scott, PFC Program Manager, Federal Aviation Administration, Airports Division, 12 New England Executive Park, Burlington, Massachusetts 01803, (617) 238–7614. The application may be reviewed in person at 16 New England Executive Park, Burlington, Massachusetts.

SUPPLEMENTARY INFORMATION: The FAA proposes to rule and invites public comment on the application to impose and use the revenue from a Passenger Facility Charge (PFC) at Martha's Vineyard Airport under the provisions of the Aviation Safety and Capacity Expansion Act of 1990 (Title IX of the Omnibus Budget Reconciliation Act of 1990) (Public Law 101–508) and Part 158 of the Federal Aviation Regulations (14 CFR Part 158).

On August 1, 1997, the FAA determined that the application to impose and use the revenue from a PFC submitted by the County of Dukes County was substantially complete within the requirements of section 158.25 of Part 158 of the Federal Aviation Regulations. The FAA will approve or disapprove the application, in whole or in part, no later than October 29, 1997.

The following is a brief overview of the impose and use application.

PFC Project #: 97–01–00–MVY.

Level of the proposed PFC: $3.00.

Proposed charge effective date: January 1, 1998.

Proposed estimated charge expiration date: December 31, 2005.

Estimated total net PFC revenue: $737,960.

Brief description of project: Construct Terminal Building.

Any person may inspect the application in person at the FAA office listed above under **FOR FURTHER INFORMATION CONTACT.**

In addition, any person may, upon request, inspect the application, notice and other documents germane to the application in person at the Martha's Vineyard Airport, West Tisbury Road, Vineyard Haven, Massachusetts.

Issued in Burlington, Massachusetts on August 6, 1997.

Vincent A. Scarano,

Manager, Airports Division, New England Region.

[FR Doc. 97–21408 Filed 8–12–97; 8:45 am]

BILLING CODE 4910–13–M

DEPARTMENT OF TRANSPORTATION

Federal Transit Administration

[FTA Docket No. 97–2789]

Notice of Request for the Reinstatement of an Expired Information Collection

AGENCY: Federal Transit Administration, DOT.

ACTION: Notice of request for comments.

SUMMARY: In accordance with the Paperwork Reduction Act of 1995, this notice announces the intention of the Federal Transit Administration (FTA) to request the Office of Management and Budget (OMB) to reinstate the following expired information collection:

49 U.S.C. Section 5310—Capital Assistance Program for Elderly Persons and Persons with Disabilities and 49 U.S.C. Section 5311-Nonurbanized Area Formula Program.

DATES: Comments must be submitted before October 14, 1997.

ADDRESSES: All written comments must refer to the docket number that appears at the top of this document and be submitted to the United States Department of Transportation, Central Dockets Office, PL–401, 400 Seventh Street, S.W., Washington, D.C. 20590. All comments received will be available for examination at the above address from 10:00 a.m. to 5:00 p.m., e.t., Monday through Friday, except Federal holidays. Those desiring notification of receipt of comments must include a self-addressed, stamped postcard/envelope.

FOR FURTHER INFORMATION CONTACT: Ms. Sue Masselink, Office of Program Management, (202) 366–2053.

SUPPLEMENTARY INFORMATION: Interested parties are invited to send comments regarding any aspect of this information collection, including: (1) The necessity and utility of the information collection for the proper performance of the functions of the FTA; (2) the accuracy of the estimated burden; (3) ways to enhance the quality, utility, and clarity of the collected information; and (4) ways to minimize the collection burden without reducing the quality of the collected information. Comments submitted in response to this notice will be summarized and/or included in the request for OMB approval of this information collection.

Title: 49 U.S.C. Section 5310—Capital Assistance Program for Elderly Persons and Persons with Disabilities and 49 U.S.C. Section 5311 Nonurbanized Area Formula Program. (*OMB Number: 2132–0500.*)

Background

The Capital Assistance Program for Elderly Persons and Persons with Disabilities provides financial assistance for the specialized transportation service needs of elderly persons and persons with disabilities. The program is administered by the States and may be used in all areas, urbanized, small urban, and rural. The Nonurbanized Area Formula Program provides financial assistance for the provision of public transportation services in nonurbanized areas and this program is also administered by the States. 49 U.S.C. Sections 5310 and 5311 authorize FTA to review applications for federal financial assistance to determine eligibility and compliance with statutory and administrative requirements. Information collected during the application stage includes the project budget, which identifies funds requested for project implementation; a program of projects, which identifies subrecipients to be funded, the amount of funding that each will receive, and a description of the projects to be funded; the project implementation plan; the State management plan; a list of annual certifications and assurances; and public hearings notice, certification and transcript. The applications must contain sufficient information to enable FTA to make the findings required by law to enforce the program requirements. Information collected during the project management stage includes an annual financial status report, an annual program status report, and pre-award and post-delivery audits. The annual financial report and program status report provide a basis for monitoring approved projects to ensure timely and appropriate expenditure of federal funds by grant recipients.

Respondents: State and local government, business or other for-profit institutions, non-profit institutions, and small business organizations.

Estimated Annual Burden on Respondents: 102.44 hours for each of the respondents.

Estimated Total Annual Burden: 11,370 hours.

Frequency: Annual.

Issued: August 7, 1997.

Gordon J. Linton,

Administrator.

[FR Doc. 97–21333 Filed 8–12–97; 8:45 am]

BILLING CODE 4910–57–P

DEPARTMENT OF TRANSPORTATION

National Highway Traffic Safety Administration

[Docket No. 94–068; Notice 2]

Highway Safety Programs; Model Specifications for Calibrating Units for Breath Alcohol Testers; Conforming Products List of Calibrating Units

AGENCY: National Highway Traffic Safety Administration (NHTSA), DOT.

ACTION: Notice; request for comments.

SUMMARY: This notice amends the Model Specifications for Calibrating Units for Breath Alcohol Testers by incorporating an alternative testing procedure using National Institute for Standards and Technology (NIST) Reference Gas Mixtures (RGMs) for the evaluation of dry gaseous ethanol calibrating devices and making other changes that were previously proposed to simplify the Model Specifications and to make them easier to read. This notice also proposes and seeks comment on a new alternate procedure for evaluating the accuracy of both wet bath and dry gas breath alcohol calibrating units using infra-red spectroscopy. Published with this notice is an amended Conforming Products List (CPL) of calibrating units that meet the Model Specifications. This amended list includes five new listings, one wet bath unit and four dry gas units.

DATES: The amendments to the Model Specifications and the issuance of the Conforming Products List of calibrating units meeting the Model Specifications become effective on August 13, 1997. Comments on the alternate testing procedure using infra-red spectroscopy proposed as an amendment to the Model Specifications published herein must be received by October 14, 1997.

ADDRESSES: Comments regarding the alternate testing procedure should refer to the docket number and the number of this notice and be submitted (preferably in ten copies) to the NHTSA Docket Section, Rm. 5109, 400 Seventh St., S.W. Washington, D.C. 20590 (Docket hours are from 9:30 a.m. to 4 p.m.).

FOR FURTHER INFORMATION CONTACT: Dr. James F. Frank, Impaired Driving Division, Office of Traffic Injury Control Programs (OTICP), NTS–11, 400 Seventh St., SW, Washington, DC 20590. Telephone (202) 366–5593.

SUPPLEMENTAL INFORMATION: On August 18, 1975 (40 FR 36167), NHTSA published a standard for Calibrating Units for Breath Alcohol Testers. A Qualified Products List of calibrating units for breath alcohol testers, of devices which met the standard, was

first issued on November 30, 1976 (41 FR 53389).

On December 14, 1984, NHTSA issued a notice to convert the mandatory standards for evidential breath testers and calibrating units for breath alcohol testers to Model Specifications for such devices (49 FR 48855 and 49 FR 48865, respectively) and to establish a Conforming Products List (CPL) of evidential breath testers and calibrating units meeting the Model Specifications. Amendments to the CPL have been published in the **Federal Register** since that time. Evidential breath testers are instruments that measure the alcohol content of deep lung breath samples with sufficient accuracy for evidential purposes. Calibrating units provide known concentrations of ethanol vapor for the calibration or calibration checks of instruments which measure breath alcohol.

NHTSA published a notice in the **Federal Register** (59 FR 67377) on December 29, 1994, amending the Model Specifications for calibrating units for breath alcohol testers and updating the CPL for calibrating units. The notice also proposed and sought comments about providing an alternate testing procedure for evaluating the accuracy and precision of dry-gas ethanol calibrating units.

Officials who use breath alcohol testers must verify their accuracy at appropriate intervals during use. The traditional means for ensuring accuracy has been by checking the breath tester calibration by use of a ''wet bath'' calibrator, a device which provides moist alcohol in air samples at accurately known concentrations. Dry gas calibrating units have become available as an alternate means for calibration checking.

A dry gas calibrator produces alcohol-in-inert gas samples (e.g., nitrogen or argon) at accurately known concentrations from a compressed gas cylinder. Dry gas calibrators, like wet bath calibrators, can be used to calibrate certain types of breath testers, but an evaluation of their precision and accuracy requires alternate procedures. Today's notice amends the Model Specifications for Calibrating Units for Breath Alcohol Testers by incorporating an alternative testing procedure using National Institute for Standards and Technology Reference Gas Mixtures for the evaluation of dry gaseous ethanol calibrating devices and making other changes that were previously proposed to simplify the Model Specifications and to make them easier to read. Additional minor changes were made to ensure accuracy and improve clarity of the document. Also, the term BrAC has replaced the term BAC throughout the model specifications to ensure consistency with usage recommended in the Uniform Vehicle Code.

Today's notice also proposes an additional new alternate procedure for evaluating wet bath and dry gas calibrating units using infra-red spectroscopy. The agency believes that use of infra-red spectroscopy will offer several important advantages in the evaluation of both wet bath and dry gas calibrating units. Comments are sought regarding the agency's proposal.

A. Comments Received

1. Overview

The agency received two comments in response to the notice of December 29, 1994: one from Scott Specialty Gas Co. (Scott Gas), a manufacturer of a dry gas calibrating unit, and one from U.S. Alcohol Testing (USAT), a manufacturer of an evidential breath test device and a wet bath calibrating unit that is currently listed on the NHTSA CPL.

Scott Gas was generally supportive of the proposed revisions to the Model Specifications. USAT stated that it would favor the use of dry gaseous ethanol calibrating devices when ''it has been adequately demonstrated that dry-EtOH [calibration units] give results comparable to those obtained with conventional wet bath simulator calibration units.''

Neither of the respondents specifically commented on the proposed revisions to simplify the Model Specifications. As stated in the notice, these proposed revisions did ''not represent substantive alterations in the procedures followed or in the criteria used to determine whether devices meet these model specifications.'' The proposed revisions have been adopted without change.

Both Scott Gas and USAT raised questions in their comments about those aspects of the Model Specifications relating to the proposed new alternate testing procedure for evaluating the accuracy and precision of dry gas calibrating units. The comments addressed a number of key issues, including the comparability of wet bath and dry gas calibrating units and certain specific conditions affecting dry gas calibrating units. The issues that were contained in the comments are summarized and discussed below.

2. Comparability Between Wet Bath and Dry Gas Calibrating Units

USAT commented that ''[T]he use of a dry gas EtOH standard makes no physical sense until it can be demonstrated that the presence of water vapor in the breath samples analyzed has no effect on the analytical outcome on the ethanol concentration of the breath samples analyzed by the [evidential breath tester].''

While it is true that dry gas and human breath differ in moisture content, NHTSA has found no reason to exclude the use of dry gas calibrating units solely on this basis. If a calibrating unit (either wet bath or dry gas) meets the precision and accuracy criteria of the Model Specifications, the calibrating unit should be considered acceptable for general use.

Independent research has confirmed the comparability of dry gas and wet bath calibrating units and the accuracy of dry gas calibrating units. Kurt M. Dubowski and Natalie A. Essary studied the performance of dry gas calibrating units and concluded that ''dry gas vapor-alcohol control [VAC] samples conformed to established formal specifications and * * * compared favorably with simulator effluents for control tests of breath alcohol analyzers which are capable of adjusting VAC results for ambient atmospheric pressure.'' [1] Lance D. Silverman, et al. reported on the comparability of wet bath and dry gas calibrating units. These researchers determined that there was substantial equivalence between both types of calibrating units. Their data ''based on collection of ethanol in an impinger and titration using a modified California Department of Health method * * * confirm[ed] the alcohol content of EBS compressed gases standards by an absolute, wet chemical method.'' [2]

3. Should the Model Specifications Be Expanded To Address Unique Conditions Affecting Dry Gas Calibrating Units?

USAT challenged the use of dry gas calibrating units based on the following factors: (a) condensation in the cylinder as a consequence of low temperatures during shipment; (b) the need to make corrections due to changes in atmospheric pressure; and (c) the performance of dry gas calibrators over a range of temperatures and concentrations.

NHTSA has considered these comments carefully and has concluded that dry gas calibrating units are suitable for evaluation according to the Model

[1] Dubowski, K. and N.A. Essary ''Vapor-Alcohol Control Tests with Compressed Ethanol-Gas Mixtures: Scientific Basis and Actual Performance.'' Journal of Analytical Toxicology (1996)20, 484.

[2] Silverman, L.D., Wong, K. and Miller, S. ''Confirmation of Ethanol Compressed-Gas Standard Concentrations by a NIST-traceable, absolute chemical method and comparison to wet breath alcohol simulators.'' Accepted for Publication in the Journal of Analytical Toxicology, 1997.

Specifications and believes that the Model Specifications are sufficient to ensure the accuracy and precision of dry gas calibrating units. However, in light of the concerns raised by USAT, the agency has amended the procedures for submitting a product for certification. When a manufacturer submits a product to the agency for testing, it now must submit also a set of the instructions that are provided to end users. The instructions must sufficiently describe the procedures to be followed to protect against condensation in dry gas cylinders that might occur as a result of freezing during shipment and to correct for atmospheric pressure.

(a) Condensation in Dry Gas Cylinders as the Result of Freezing

USAT commented that dry gas calibrating units were previously shown to have a ''memory effect when transported or stored at temperatures somewhat below room temperature.'' NHTSA acknowledges that dry gas calibrators could freeze during shipment and this could affect test results. As a result of freezing, alcohol could condense in the inside surface of the cylinder. If this were to happen, re-equilibration of the alcohol with the nitrogen after warming to room temperature could take a long time. It is possible that the gas in such cylinders might be used before re-equilibration occurred with the result that samples would be obtained at incorrect concentrations.

Manufacturers of dry gas calibrating units recommend that, after receiving the dry gas cylinders, users should warm the cylinders to room temperature, then lay them down on a flat surface and physically roll them back and forth for a period of ten minutes to ensure equilibration of the contents. To test whether this procedure would ensure that the dry gas calibrators remained accurate, several cylinders of Lion Laboratories AlcoCal dry gas calibrators were placed in the freezer compartment of a refrigerator overnight at a temperature of −15°C, then taken out of the freezer, warmed to room temperature and rolled on a table top for ten minutes. Data was collected confirming that tanks that were rolled after freezing gave accurate results.[3]

As described in the section on procedures for product submission included at the end of this notice, when manufacturers submit their instruments for testing, they are required to submit copies of the instructions they provide to end users. NHTSA will examine these instructions to ensure that they provide sufficient information about this procedure. Products submitted without this information will not be tested.

(b) The Effect of Variable Atmospheric Pressure on Dry Gas Calibrators

USAT commented that dry gas calibrating units may exhibit a pressure-dependent concentration effect that wet bath calibrating units do not. The packaging of a dry gas calibrator compresses a large volume of an alcohol-in-inert gas mixture into a metal cylinder of only about one (1) liter. The concentration of the alcohol in the gas is given by the Ideal Gas Law [4]: $PV = nRT$, where P is the pressure of the gas, V is the volume, n is the number of moles of gas, R is the gas constant, and T is the temperature of the gas. The concentration of the gas is obtained as a function of pressure and temperature: Concentration = $n/V = P/RT$.

When a calibration check is performed, some of the gas in the cylinder is released by operating the release valve. The volume of the released gas will expand and its pressure will drop until prevailing atmospheric pressure is reached. The gas is prepared so that the desired concentration is obtained at normal atmospheric pressure, 760 millimeters of mercury. However, atmospheric pressure varies slightly from day to day and can change suddenly at times. The most significant effect comes from high elevations, where prevailing atmospheric pressure is significantly lower than 760. Atmospheric pressure corrections are made using an equation derived from the Ideal Gas Law: $C = C_{760} \times P/760$, where C is concentration and P is the prevailing atmospheric pressure.

In order for any calibrating unit to operate properly under such atmospheric pressures, accurate pressure correction must be made. The agency has tested the dry gas calibrating units placed on the CPL in this publication using this pressure correction procedure and has determined that these devices meet the Model Specifications. The agency concludes that the pressure dependent concentration effect is consistent and well established and that pressure correction procedures suggested by manufacturers are effective and produce accurate results.

As described in the section on procedures for product submission included at the end of this notice, when manufacturers submit their instruments for testing, they are required to submit copies of the instructions they provide to end users. While manufacturers already provide information on pressure corrections in their instructions to end users, these Model Specifications have been amended to require that the instructions include information about how atmospheric pressure corrections should be made. NHTSA will examine manufacturers' instructions to ensure that they provide sufficient information about these pressure correction procedures. Products submitted without this information will not be tested. NHTSA believes that these procedures will be effective when used by properly qualified breath alcohol technicians.

(c) The Performance of Dry Gas Calibrators Over Range of Temperatures and Concentrations

Throughout its written comments, USAT argues that dry gas standards should not be accepted because they have not been shown to be comparable to wet bath standards. USAT argues:

> Further substantial equivalence of the dry-EtOH and wet simulators must be shown over the range of environmental temperatures and pressures likely to be encountered during normal field usage of any of the devices appearing on the CPL * * * [and] over the range of NHTSA tested concentrations * * * throughout the operating lifetime of the dry gas [calibrating units] * * *
>
> Results of comparative performance of dry-ETOH [calibrating units] versus wet simulator [calibrating units] need to be publicly presented in scientific forums and published in the technical literature to establish a level of confidence that dry gas [calibrating units] yield substantially equivalent results to those obtained for decades from conventional wet simulator [calibrating units].

USAT commented that ''Dry gas EtOH [calibrating units] must be required to show equivalent performance over the entire range of environmental conditions used to test wet bath simulator [calibrating units].'' The agency tests both wet bath and dry gas calibrating units according to the Model Specifications. The agency believes that the Model Specifications require testing over an appropriate range of temperatures and concentrations. Dry gas calibrating units are required to show equivalent performance over the entire range of environmental conditions used to test wet bath calibrating units.

[3] Flores, Arthur, ''Dry Gas Calibration Units Report'' U.S. Department of Transportation Volpe National Transportation Systems Center, Cambridge MA, September 1996.

[4] Farrington Daniels & Robert Alberty, ''Physical Chemistry'' 3rd Ed., John Wiley & Sons, New York, 1966.

4. Are Dry Gas Calibrating Units Sufficiently Accurate?

USAT states that it would favor use of dry gas calibrating units when ''it has been adequately demonstrated that dry EtOH [calibrating units] give results comparable to those obtained with conventional 'wet bath simulator calibration units'.''

The same Model Specifications used to test the accuracy and precision of wet bath calibrating units are used to ensure the quality and performance of dry gas calibrating units. All units are tested over the same range of temperatures and concentrations. All dry gas calibrating units placed on the CPL in this publication conform to the Model Specifications. Any unit that fails to meet the requirements of the Model Specifications would not be included on the agency's list of conforming products.

5. Miscellaneous Issues

(a) Quality Assurance Plan

Scott Gas recommended that the agency require Quality Assurance Plans (QAPs) for calibrating units. QAPs are used to provide information on the correct use, proper maintenance procedures and other specific requirements of a calibration device. Scott Gas recommended that the QAP address issues such as NIST traceability, mechanisms for product coding and traceability, list of proper delivery equipment, specifications on the containers being submitted for approval, shipping and storage information, written laboratory certification and manufacturing procedures, DOT specification documentation on containers, a specified uncertainty at the 95% confidence level and shelf life results.

NHTSA strongly endorses the need for quality control in manufacturing, but believes that this is addressed appropriately by the manufacturers of these instruments. When calibrating units are used by law enforcement officials, quality control measures are also taken under the programs of each state. In transportation workplace testing, quality control is ultimately handled by the existing requirement for QAPs for evidential breath testers and alcohol screening devices (Screeners) which address calibration accuracy. The evidential breath tester QAPs call for calibration checks using an approved calibrating unit. If an evidential breath tester or a Screener gives an incorrect reading when a calibration check or a calibration is conducted, it suggests that there is an error in the system consisting of the evidential breath tester (or Screener), the breath alcohol technician, or the calibrating unit. NHTSA believes that the safeguards already in place in the QAPs for evidential breath testers and Screeners make it unnecessary to require an additional QAP specific to the calibrating unit.

(b) Stability of Dry Gas Calibrators Over Their Operating Life

USAT commented that ''Further substantial equivalence of the dry-EtOH and wet simulators must be shown over the range of NHTSA tested concentrations * * * throughout the operating lifetime of the dry gas [calibrating units] * * *'' Scott Gas also commented that ''presentation of gas manufacturer stability documentation to NHTSA, before inclusion on the CPL, plus NHTSA evaluation of aged product should be done in order to assess the ''real life'' performance of the product.''

The agency's experience indicates that dry gas calibrating units are normally stable even after years of storage. In addition, NHTSA has verified that National Institute of Standards and Technology Reference Gas Mixtures used to evaluate dry gas cylinders remained stable to within ±0.001 BrAC for a one year period. The agency has concluded that manufacturers will not be required to provide stability documentation.

NHTSA shall certify that the CPL does, in fact, reflect calibrating units which meet the performance criteria set forth in the Model Specifications. NHTSA reserves the right to test any unit on the CPL throughout its useful life to ensure that the unit is performing in accordance with the Model Specifications. In addition, in the section on procedures for a product submission, included at the end of this notice, NHTSA requests that users of calibrating units provide both acceptance and field performance data to NHTSA's Office of Traffic Injury Control Programs. NHTSA will conduct a special investigation if information gathered from the field indicates that a device on the CPL is not performing in accordance with the Model Specifications.

After the recent expansion of the use of dry gas calibrators, one manufacturer found that the concentration of some dry gas calibrators had changed from the stated concentrations after weeks or months of storage. A recall of all cylinders in use was ordered. The problem was investigated and, after extensive testing it was traced to defects in certain cylinders and was corrected.

(c) National Institute of Standards and Technology Reference Gas Mixtures

In the Notice published on December 24, 1994, NHTSA proposed to revise the Model Specifications to permit use of National Institute of Standards and Technology Reference Gas Mixtures (NISTRGMs) as reference samples to evaluate the accuracy of dry gas calibrating units by gas chromatography.

Use of these dry gas standards allows reliable evaluation of dry gas calibrators by the gas chromatograph technique. USAT commented that:

> It is rumored that NISTRGMs are manufactured by Scott Specialty Gases/Scott Medical Products Inc. If true, the NHTSA-proposed substitution of NISTRGMs to replace wet bath simulator standards for the testing of any Scott Gas gaseous standards amounts to one manufacturer certifying itself and claiming the blessing of both NIST and NHTSA.

The NISTRGMs obtained by the Volpe center were manufactured by Scott Specialty Gases, but were obtained from and analyzed independently by the Department of Commerce National Institute for Standards and Technology (NIST). NIST attested in writing to the accuracy of each individual cylinder of gas which was obtained by the Volpe Center.

(d) The Comparability of Dry Gas Calibrating Units When Used With a Variety of Evidential Breath Testing Devices

USAT commented that ''dry gas standards are likely to give different results when used on [evidential breath testers] based on different technologies.'' According to USAT, there have been reports that dry gas calibrating units do not yield the same results for certain breath testers as wet bath calibrating units. USAT asserts that a small ''offset'' in test result reportedly occurs when dry gas calibrators are used for these breath testers compared with wet calibrators at the same concentration. The offset for fuel cell breath testers is reported to be −0.002 BrAC when dry calibrators are used to check calibration of fuel cell evidential breath testers.

Performance requirements contained in NHTSA's Model Specifications for evidential breath testers require that these instruments be accurate to ±0.005 or 5% of test BrAC, whichever is greater, with a standard deviation not greater than 0.004. The performance requirements for calibrating units require the devices to be accurate to within 0.002 BrAC of the test BrAC with relative standard deviation of 2%. Any offset associated with a particular calibrator is not considered.

Agency testing indicates that dry gas calibrating units can be used with infra-red and fuel cell breath testers.[5] The agency tested four fuel cell testers, one fuel cell/infra-red combination tester with readout from the fuel cell sensor, and one infra-red tester to obtain wet dry comparison data. The instruments tested were:

Life Loc, Inc. PBA 3000 and PBA 3000X (FC)
CMI, Inc. Intoxilyzer 400 (FC)
Intoximeters, Inc. AlcoSensor IV (FC)
National Draeger, Inc. Breathalyzer 7410–II (FC)
Intoximeters, Inc. EC–IR (FC/IR)
CMI, Inc. Intoxilyzer 5000 (IR)

Measurements were made alternately using first a sample from a wet bath calibrator, then a sample from a dry gas calibrator. Five measurements of each type of sample were made on each of the testers. The wet calibrator solutions were prepared to produce the same concentrations as the corresponding dry gas. Wet samples were produced using RepCo Marketing simulators (wet bath calibrating units). Dry samples were obtained from dry gas calibrating units from Scott Specialty Gases, Inc. (0.04 BrAC) and Gateway Airgas, Inc. (0.04 and 0.088 BrAC). The concentration of the Scott gas was verified by Intoximeters, Inc. and the concentration of the gas from Gateway Airgas was verified by infra-red spectroscopy at the Volpe center. The factory calibrations of the breath testers were not adjusted. The reliability of the ''true value'' of the wet or dry standards can be taken as known values to within about ±0.001 BrAC. Thus, the true value of a wet sample or a dry sample at 0.040 BrAC can be expected to be correct to within about ±0.001 BrAC.

The differences between wet bath and dry gas calibrating units were negligible when the comparisons were made using infra-red breath testers. These differences were around 0.002 BrAC and are not noticeable unless comparisons are made carefully, because this value is near the accuracy limit of the calibrating units.

The differences observed when comparisons were made using fuel cell type breath testers, the next most widely used type of breath tester, were more noticeable, especially at high alcohol levels. The offset for fuel cell breath testers averaged somewhat less than 4% of the nominal BrAC when dry gas calibrators were used to check calibration of fuel cell evidential breath testers. The offsets found for the breath testers ranged from −0.0014 BrAC to 0.0026 BrAC when compared at the 0.04 BrAC level, and from −0.0020 to 0.0052 when compared at the 0.088 level. The standard deviations for the wet and dry data were in the fourth decimal place except in one instance when a value of 0.002 was obtained, which was still acceptable. These results indicate that the offsets are small and reproducible enough that reliable corrections can be applied to ensure accurate test results. The offsets observed cannot be assumed to arise only from the inherent differences in measurement of moist samples compared to the measurement of dry samples since there are also uncertainties of ±0.001 in the true concentration of wet bath or dry gas calibration unit vapors.

Offsets must be indicated by manufacturers in their instructions to end users. Manufacturers are required to include their instructions in a submission of a calibrating unit for testing. The agency will examine the instructions to ensure that they provide sufficient information on offsets necessary for certain breath testers. Products submitted without this information will not be tested.

Gas Chromatograph breath testers depend on extensive surface interaction with the sample being analyzed, and the greatest differences between dry and wet standards are seen with this type of breath tester. In its laboratory, NHTSA has found that the effects are not stable. They vary with type and condition of resolving column used. Accordingly, NHTSA believes that dry gas calibrating units should not be used with gas chromatograph breath testers because the results are too variable. The agency will include a footnote on the CPL concerning the use of dry gas standards with gas chromatograph evidential breath testers, indicating that the agency does not recommend the use of dry gas calibrating units with gas chromatograph evidential breath testers.

B. Procedures for a Product Submission

Testing of calibrating units submitted by manufacturers to these Model Specifications will continue to be conducted by the DOT Volpe National Transportation Systems Center (VNTSC). Tests will continue to be conducted semi-annually or as necessary. Manufacturers wishing to submit calibrating units for testing must apply to NHTSA for a test date (Office of Traffic Injury Control Programs, NTS–11, NHTSA, 400 Seventh Street, S.W., Washington, D.C. 20590). Normally, at least 30 days will be required from the date of notification until the test can be scheduled. One week prior to the scheduled initiation of the test program, the manufacturer will deliver at least one unit of the device to be tested to: VNTSC, DTS–75, 55 Broadway, Kendall Square, Cambridge MA 02142. The manufacturer shall be responsible for ensuring that the unit is operating properly. If the manufacturer wishes to submit a duplicate, backup unit, it may do so.

When a manufacturer delivers a device to be tested, it shall also deliver to VNTSC specifications and drawings that fully describe the unit and the Operator's Manual and Maintenance Manual normally supplied with purchase of the equipment. Proprietary information will be respected. (See 49 CFR Part 512, regarding the procedures by which NHTSA will consider claims of confidentiality.)

The manufacturer shall also deliver the instructions that will accompany the device when it is sold. The instructions shall include information about the procedures to be followed to protect against possible condensation that might occur as a result of freezing during shipment and to correct for atmospheric pressure. The instructions shall also include information about any offsets that may apply to the use of a particular type of breath tester. NHTSA will examine these instructions to ensure that they provide sufficient information about these matters. Products submitted without this information will not be tested.

The manufacturer will have the right to check the calibrating unit between arrival in Cambridge and the start of the test, and to ensure that the calibrating unit is in proper working condition but will have no access to it during the tests. Any malfunction of the calibrating unit which results in failure to complete any of the tests satisfactorily will result in a finding that it does not conform to the Model Specifications. If a unit fails to conform, it may be resubmitted for testing after appropriate corrective action has been taken.

On the basis of these results, NHTSA will publish a Conforming Products List (CPL) identifying the calibrating units that conform to the Model Specifications.

Retesting of units will be conducted when necessary. NHTSA intends to modify and improve these Model Specifications as new data and improved test procedures become available. (The test procedures may be altered in specific instances, if necessary, to meet the unique design features of a calibrating unit). If these Model Specifications are modified, notification will be provided in the **Federal Register**. If NHTSA determines that retesting to the modified

[5] Flores, Arthur, ''Dry Gas Calibrating Units Report'', U.S. Department of Transportation, Volpe National Transportation Systems Center, Cambridge, MA, September, 1996.

specifications is necessary, a manufacturer whose equipment is listed on the CPL will be notified to resubmit the equipment for testing to the modified specification only.

NHTSA will certify that the CPL does, in fact, reflect calibrating units which meet the performance criteria set forth in the Model Specifications. NHTSA reserves the right to test any unit on the CPL throughout its useful life to ensure that the unit is performing in accordance with the Model Specifications.

If at any time a manufacturer plans to change the design of a calibrating unit currently on the CPL, the manufacturer shall submit the proposed changes to the Office of Traffic Injury Control Programs for review. Based on this review, NHTSA will decide whether the change will require retesting of the unit. Normally, such retesting will be accomplished the next time testing is performed. Guidance to manufacturers on considerations governing this decision are available from NHTSA's OTICP, upon request.

OTICP will be the point of contact for information about acceptance testing and field performance of equipment already on the list. When it is available, NHTSA requests that users of calibrating units provide both acceptance and field performance data to OTICP. Information from users will be used to: (1) help NHTSA determine whether units continue to perform according to the NHTSA Model Specifications and (2) ensure that field use does not indicate excessive breakdown or maintenance problems.

If information gathered indicates that a device on the CPL is not performing in accordance with the Model Specifications or demonstrates problems involving the device, NHTSA will direct VNTSC to conduct a special investigation. This investigation may include visits to users and additional tests of the unit obtained from the open market. If the investigation indicates that the units actually sold on the market are not meeting the Model Specifications, then the manufacturer will be notified that the unit may be removed from the list. In this event the manufacturer shall have 30 days from the date of notification to reply.

Based on the VNTSC investigation and any data provided by the manufacturer, NHTSA will decide whether the unit should remain on the list. Upon resubmission, the manufacturer must submit a statement describing what has been done to overcome the problems that led to the dropping of the unit in question from the list.

C. Infra-red Spectroscopy

In this notice, NHTSA is proposing an alternate procedure which uses infra-red spectroscopy for the evaluation of dry gas units (see Appendix A). It is proposed as an amendment to the Model Specifications for Calibrating Units published in this notice. In infra-red spectroscopy, the wet bath or dry gas sample to be analyzed is passed into a chamber through which infra-red radiation is transmitted. The wavelength of the transmitted radiation is chosen so that some of it is absorbed by alcohol. According to the Beer-Lambert Law of absorption of radiation,[6] the amount of energy absorbed by the sample in the chamber is proportional to the concentration of the alcohol in the sample. By measuring the amount of radiation transmitted when the sample chamber is empty and the amount transmitted when the sample is present, the concentration of the alcohol in the sample can be determined.

The agency believes that use of infra-red spectroscopy will offer several important advantages. First, the technique can be used to evaluate both wet bath calibrating units and dry gas calibrating units because surface interactions do not effect the analysis. Second, standards used in the evaluations can be prepared at the Volpe Center, eliminating the necessity of obtaining standards from an outside source.

D. Comments

Interested persons are invited to comment on the proposed alternate procedure described in this notice. It is requested, but not required that 10 copies be submitted. Comments must not exceed 15 pages in length (49 CFR 553.221). Necessary attachments may be appended to those submissions without regard to the 15 page limit. This limitation is intended to encourage commentors to detail their primary arguments in a concise fashion.

All comments received before the close of business on the comment closing date indicated above will be considered, and will be available for examination in the docket at the above address, both before and after that date. To the extent possible, comments filed after the closing date will also be considered. However, the amendments to the Model Specifications may be published at any time after that date, and any comments received after the closing date and too late for consideration with regard to the action will be treated as suggestions for future revisions to the Specifications. NHTSA will continue to file relevant material in the docket after the closing date as it becomes available. It is recommended that interested persons continue to examine the docket for new material.

Those persons who desire to be notified upon receipt of their comments in the docket should enclose a self-addressed stamped postcard in the envelope with their comments. Upon receiving the comments, the docket supervisor will return the postcard by mail.

E. Conforming Products List

The Conforming Products List (CPL), which appears as Appendix B to this notice, lists the calibrating units that have been retested to date at the lower BACs (i.e., at 0.020, 0.040, 0.080, and 0.160) and found to conform to the Model Specifications reprinted herein. The CPL also lists devices that have not been tested at these lower BAC levels, but which were listed on a previous CPL for calibrating units (58 FR 26030) on the basis that they were tested and found to conform to the earlier model specifications when tested at BAC levels 0.050, 0.100 and 0.150. These devices have been identified with an asterisk.

This CPL also includes five new listings: four dry-gas calibrating units and one wet-bath calibrating unit. The dry gas units include: Model EBS™'' Gaseous Ethanol Breath Standard submitted by Scott Specialty Gases, Inc. of Plumsteadville, PA; the Ethanol Breath Alcohol Standard submitted by Gateway Airgas (previously known as A.G. Specialty Gas Company, or Acetylene Gas Company) of St. Louis, MO; the AlcoCal Breath Alcohol Standard submitted by Lion Laboratories, plc of Cardiff, Wales, UK; and Compressed ethanol-in-nitrogen submitted by Liquid Technology Corporation of Orlando, FL. All of the dry-gas calibrating units were tested using the alternate procedure that uses the NISTRGM. The new wet-bath unit is Model 3402C submitted by RepCo Marketing, Inc., of Raleigh, NC.

In consideration of the foregoing, NHTSA amends the Model Specifications for Calibrating Units, as last published in the **Federal Register** on December 29, 1994 (59 FR 67377), as set forth below. NHTSA proposes to further amend these Model Specifications, as set forth in Appendix A.

[6] Farrington Daniels & Robert Alberty, ''Physical Chemistry'' 3d Ed. John Wiley & Sons, New York, 1966.

Model Specifications for Calibrating Units for Breath Alcohol Testers

1.0 Purpose and Scope

These specifications establish performance criteria and methods for testing of calibrating units which provide known concentrations of ethanol vapor for the calibration or calibration checks of breath alcohol testers. The results of this testing are intended for use in the conformance testing for the maintenance of a Conforming Products List for calibrating units.

2.0 Definitions

2.1 Conformance testing. Testing to check the conformance of a product with these model specifications in advance of and independent of any specific procurement action.

2.2 Concentration units. Blood alcohol concentration: grams alcohol per 100 milliliters blood or grams alcohol per 210 liters of breath in accordance with the Uniform Vehicle Code, Section 11–903(a)(5).[7] BrAC is often used to indicate that the measurement is a breath measurement, i.e. gram alcohol per 210 liters of breath.

2.3 Relative Standard Deviation (RSD). The ratio of the standard deviation (SD) of a series of measurements to the mean of the series expressed as a percentage:

RSD=(SD/Mean)×100 percent

2.4 Standard Deviation (SD). A common indication of precision in the measurement of the concentration of a succession of N vapor samples.

$SD=\{Sum\ (X_i-X_m)^2/(N-1)\}^{1/2}$

where X_i=a single measurement result;
X_m=the average of the measurements;
N=the number of measurements made in the test.

2.5 Systematic Error (SE). An indication of the accuracy of the measurement of the concentration of a succession of vapor samples.

$SE=X_m$-test BrAC

2.6 Least Squares Fit Calibration Curve. A line fitted to a number of measurement pairs, one the independent value (X) and the other the dependent value (Y), over a measurement range.

The fitted line is of the form: Y=a+bX, where intercept, $a=Y_m-bX_m$, and slope, $b=(SumX_iY_i-NX_mY_m)/(SumX_i^2-nX_m^2)$.

3.0 Tests and Requirements

If the BrAC of the CU is fixed, perform the tests at the fixed BrAC; otherwise, prepare the CU for testing at 0.08 BrAC except as otherwise required in Test 1 below. Each of the tests require 10 measurements to three decimal places using the test procedure specified in 3.1. The CU will be operated according to the manufacturer's instructions. Unless otherwise specified, the tests will be performed in the absence of drafts and at prevailing normal laboratory temperature, humidity, and barometric pressure. Performance requirements are:

-0.002 BrAC ≤ SE ≤ + 0.002 BrAC; RSD ≤ 2%

Test 1. Precision and Accuracy. Test at each specified BrAC.
Test 1.1: 0.020 BrAC
Test 1.2: 0.040 BrAC
Test 1.3: 0.080 BrAC
Test 1.4: 0.160 BrAC

Test 2. Ambient Temperature. Use a temperature chamber controllable to ±2°C. Soak the CU at the specified temperature for 1 hour, being careful to prevent drafts on the device, then test at that temperature.

Test 2.1: 10 °C
Test 2.2: 30 °C.

Test 3. Input Power. If the CU is powered by nominal voltages of 120 volts AC or 12 volts DC, condition the device for one half hour at the appropriate input voltage specified below, then test at that voltage. Monitor the input power with a voltmeter accurate to ±2% full scale in the range used and re-adjust the voltage, if necessary. If the voltage is AC, conduct tests 3.1 and 3.2. If the voltage is DC, conduct tests 3.3 and 3.4.

Test 3.1: 108 Volts/AC
Test 3.2: 123 Volts/AC
Test 3.3: 11 Volts/DC
Test 3.4: 15 Volts/DC

Test 4. Electrical Safety Inspection. Examine the CU for protection of the operator from electrical shock. Examine for proper use of input power fuses, and verify that there are no exposed male connectors at high potential. Determine that overheating does not occur during operation and that undue fire hazards do not exist.

3.1 Test Procedure (Original, Wet-bath)

Equipment and Supplies: *Gas Chromatograph* capable of complete resolution of ethanol in test samples, with heated gas sampling valve. *Water bath* thermostated at 34°C ±0.1°C. *Glass Reference Sample Bottles (300 ml capacity or greater) with Stopper and Inlet and Outlet Air Hoses* (see Figure 1). Hoses should be about 1/8″ OD Teflon tubing. *Reference Ethanol Solutions* prepared using class A glassware and American Chemical Society reagent grade ethanol or USP grade ethanol. The purity of the ethanol used shall be compared with the National Institute of Standards and Technology (NIST) Standard Reference Material for ethanol. Use the value of Harger, *et al.*, for the partition ratio for concentration of ethanol in head space to concentration in solution at 34°C, Ka/w = 0.000393[8] to prepare two solutions which, when thermostated at 34°C, produce head space ethanol vapor concentrations that bracket the test BrAC by no more than ±20%. Small Air Pump for bubbling air through reference solutions (see Figure 1).

Step 1. Prepare the Gas Chromatograph for measurement of vapor samples. Adjust instrument temperatures, gas flows, detector, and recording device for optimum response for ethanol. Prepare the CU for use according to manufacturer's instructions.

Step 2. Fill two reference solution bottles to ¾ full with above reference solutions. Insert stopper assemblies with bubble line and alcohol vapor line in place and put bottles in the water bath with water level up to the stopper. Connect air pump to bubble line. Connect alcohol vapor line to gas chromatograph sampling valve inlet fitting. Allow 1 hour for temperature equilibrium to be achieved.

Step 3. Turn on air pump which has been pre-set to pump air through the reference solution bottle-gas chromatograph sampling assembly at a rate just sufficient to thoroughly flush the system in 10 seconds. After flushing is complete, allow the sample to relax to atmospheric pressure, then inject the reference sample onto the gas chromatograph column. In this way, obtain 5 chromatograms of one of the reference solution head space ethanol vapors.

Step 4. Thoroughly flush the sample loop with vapors from the CU device, while avoiding over-pressurizing of the sampling system. To prevent condensation of alcohol, warm the transfer line if necessary. Allow the sample to relax to atmospheric pressure, then inject the sample onto the column. In this way, obtain 10 ethanol chromatograms using the CU device.

Step 5. Repeat step 3 using the second reference solution.

Step 6. Calculations. *Peak height to BrAC conversion factor.* For each ethanol peak obtained in step 2 and step

[7] Available from National Committee on Uniform Traffic Laws and Ordinances, 405 Church Street, Evanston, IL 60201.

[8] RN Harger, BB Raney, EG Bridwell, MF Kitchel, J. Biol. Chem. 183, 197–213 (1950). Additional data from Harger in a private communication (see 49 FR 48869).

5, calculate a conversion factor for ethanol concentration by dividing the equivalent BrAC of the vapor sample by the peak height obtained for that sample. From the ten samples, obtain the mean and the RSD of the conversion factors. If the RSD obtained fails to meet the criteria for RSD in 3.0, perform necessary troubleshooting and repeat the procedure from Step 1. Use the mean of the conversion factors to calculate the BrAC for each of the 10 ethanol peaks obtained in step 4. Calculate the mean, the RSD, and the systematic error of the experimental BrACs.

BILLING CODE 4910–59–P

Figure 1. Wet Bath Reference Sample Set-up. Sample lines ⅛″ Teflon. The bubble line should extend at least 4 inches below surface of the solution. The length of the alcohol vapor line from the headspace to the gas chromatograph should be minimized.

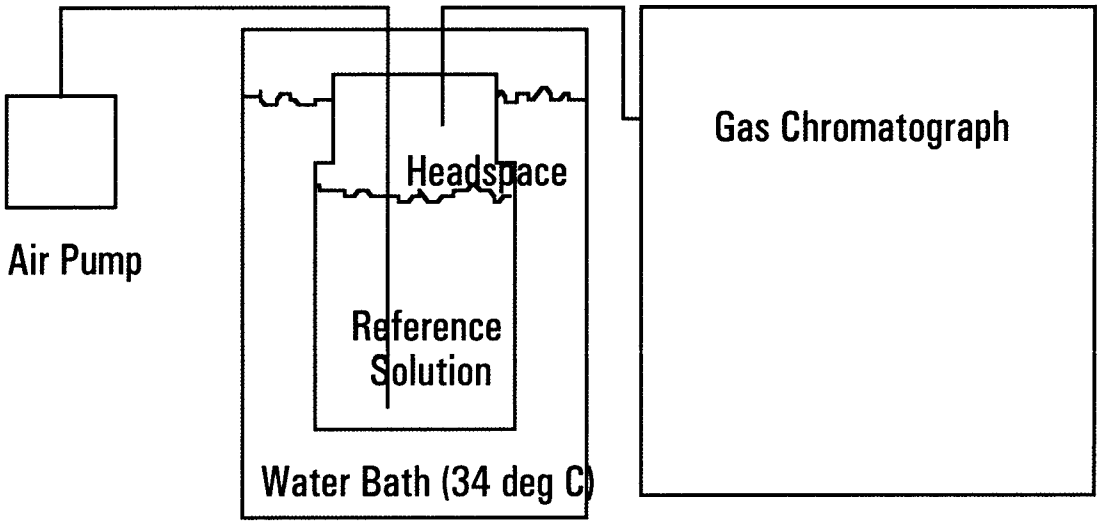

BILLING CODE 4910–59–C

3.2 Test Procedures (for dry gas Calibrating Units): Alternate Test Method Using National Institute of Standards and Technology Reference Gas Mixtures (NISTRGMs) in Place of Wet Bath Reference Samples

The following alternate method for the evaluation of dry gaseous ethanol calibration devices is presented.

Additional required material: For the alternate method for evaluation of dry gaseous ethanol calibration devices, the following will be required: Four cylinders of National Institute of Standards and Technology ethanol-in-inert gas Technical Reference Gas Mixtures (NISTRGMs) which span the BrAC range 0.01 to 0.16.

Alternate Procedure for evaluation of dry gaseous ethanol calibration devices. This procedure substitutes the use of NISTRGMs in place of the wet bath reference samples when evaluating dry gas CUs.

Step A1. Connect one of the NISTRGM cylinders to the inlet of the gas chromatograph sampling valve and pass reference gas through the sampling system at a rate just sufficient to thoroughly flush the system in about 10 seconds. Allow the sample to relax to atmospheric pressure, then inject the sample onto the column. In this way, obtain 5 chromatograms of the reference gas.

Step A2. Repeat Step A1 for each of the four NISTRGM reference gas mixtures.

Step A3. Calculate the RSD of the concentration divided by peak height data obtained in Step A1 and Step A2. If the calculated RSD meets the criteria of 3.0, calculate the slope and intercept of the least squares fit calibration line for conversion of peak height to BrAC. Using the average peak height of each NISTRGM and the slope and intercept data, calculate the concentration of each NISTRGM. If the resulting concentrations are within the stated accuracy of the NISTRGM, proceed to Step A4.

Step A4. Connect the calibrating device to the inlet of the gas chromatograph sampling system and allow the calibrating device gas to flow at a rate just sufficient to thoroughly flush the sampling system in about 10 seconds. Allow the sample to relax to atmospheric pressure, then inject the sample onto the column. In this way, obtain 10 chromatograms of the calibrating device gas.

Step A5. Calculations. Using the peak height data obtained in Step A4 and intercept and slope data obtained in Step A3, calculate the BrAC for each of the 10 peak heights. Calculate the mean, RSD, and systematic error of the calculated BrACs.

Authority: 23 U.S.C. 402; delations of authority at 49 CFR 1.50 and 501.

Issued: August 7, 1997.

James Hedlund,

Associate Administrator for Traffic Safety Programs.

Appendix A—Proposed Alternate Procedure Using Infra-Red Spectroscopy

This appendix presents an alternate procedure using infra-red spectroscopy that is suitable for evaluating vapor samples from either wet-bath CUs, or from dry-gas CUs.

3.3 Proposed Test Procedures (for dry gas or wet bath calibrating units).

3.3.1 General. General. The method uses the Beer-Lambert Law of absorption of radiant energy by fluids

$I = I_o X e^{-abc}$

Where:

I_o is the energy entering the sample chamber of a spectrophotometer containing the sample to be analyzed.

I is the energy transmitted from the sample chamber.

a is the absorptivity of the sample.

b is the radiation path length of the sample chamber.

c is the concentration of the sample in the sample chamber.

A convenient form of the Beer-Lambert law is

$Ln(I_o/I) = abc$

where the term ($Ln(I_o/I)$, the logarithm of the ratio of incident to transmitted energy, is called the absorbance of the sample. In the procedure described below, the terms a and b are treated as a single quantity, ab, and the term c is BrAC.

3.3.2 Test Procedure.

Equipment and Supplies. *Infra-red Spectrophotometer* with sample chamber that can be heated to above 40° C. A non-dispersive instrument with appropriate band pass filters and configured to measure breath alcohol samples, such as an infra-red evidential breath tester listed on the NHTSA Comforting Products List for evidential breath testers may be used. The detector voltage of the instrument must be accessible for measurement. The sampling hoses of the device may be altered for more convenient processing of test samples. *Water bath* thernostated at 34°C ±0.1°C. *Glass Reference Sample Bottles (300 ml capacity or greater) and Stoppers with Bubble and Alcohol Vapor lines* (see Figure 2). *Reference Ethanol Solutions* prepared using Class A glassware and American Chemical Society reagent grade ethanol or USP grade ethanol. The purity of the ethanol used shall be compared with the National Institute of Standards and Technology (NIST) Standard Reference Material for ethanol. Use the value of Harger, *et al.*, for the partition ratio for concentration of ethanol in head space to concentration in solution at 34° C, $K_{a/w} = 0.000393^2$ to prepare two aqueous alcohol solutions which bracket the test BrAC by no more than ±20%. A cylinder of inert *Flushing Gas*, which is optically clear in the absorption region used for measurement. This gas will be used to flush the sample chamber of the spectrophotometer and to deliver reference headspace vapors and wet bath sample vapors into the sample chamber. *Pressure regulating valve with teflon delivery hose* for controlling flow and delivery of flushing gas.

Step B1. Prepare the spectrometer for measurement of vapor samples. Prepare the CU for use according to manufacturer's instructions.

Step B2. Fill a reference sample bottle to ¾ full with water and two reference sample bottles to ¾ full with the above reference solutions. Insert stopper assemblies ensuring that the end of the bubble line reaches to at least 4 inches below the surface of the solution, then place the bottles in the water bath with water level up to the stopper. Allow 1 hour for temperature equilibrium to be achieved.

Step B3. Connect the bubble line of the sample bottle containing water only to the flushing gas valve and the vapor line to the spectrophotometer inlet and flush the sample chamber with water vapor and obtain the detector voltage reading. Then flush the detector chamber with flushing gas only and obtain the detector reading. Repeat 2 times to obtain 3 sets of readings. If the CU being evaluated is a wet bath device, skip this step and proceed to Step 4.

Step B4. In the manner of Step 3, obtain 5 sets of detector readings using one of the reference alcohol solution bottles.

Step B5. In the manner of Step 3, obtain 10 sets of detector readings from the CU being evaluated. If the CU is a wet bath device, use the flushing gas fill the sample chamber, operating the device according to manufacturer's instructions. If the CU device is a dry gas device, fill the sample chamber according to manufacturer's instructions.

Step B6. Repeat Step 5 using the other reference alcohol solution bottle.

Step B7. Repeat Step 3.

Step B8. Calculations. For each measurement pair, I_0 is the detector voltage obtained for the flushing gas alone in the sample chamber and I is the voltage obtained for the flushing gas with reference sample or test sample in the sample chamber corrected for water vapor absorption, i.e.; the detector voltage obtained for headspace reference samples at 0.000 BrAC. Use the average of 6 voltage readings obtained for the water samples for the correction for water vapor absorption ($I=I_{sample} - I_{water}$). In the case of wet bath device samples, there is no correction for water vapor absorption. If the detector is biased, I will be the difference between the bias voltage and the above voltage.

Calulate the absorbance of each of the 10 reference samples. Divide each absorbance by the corresponding BrAC of the sample. Obtain the mean (which is the factor ab), SD, and RSD for the 10 ratios. If the RSD is more than 2%, trouble shoot the procedure and repeat.

Calculate the absorbance for each of the 10 CU test samples. Divide each by the ab factor to obtain the BrAC for each of the 10 CU samples. Obtain the mean, SD, RSD, and SE.

BILLING CODE: 4910–59–P

Figure 2. Equipment set-up. Bubble and sample lines ⅛″ teflon, minimized length. Depth of bubble line into reference solution at least 4″. The alcohol vapor line from the headspace to the IR specrophotometer should be minimized.

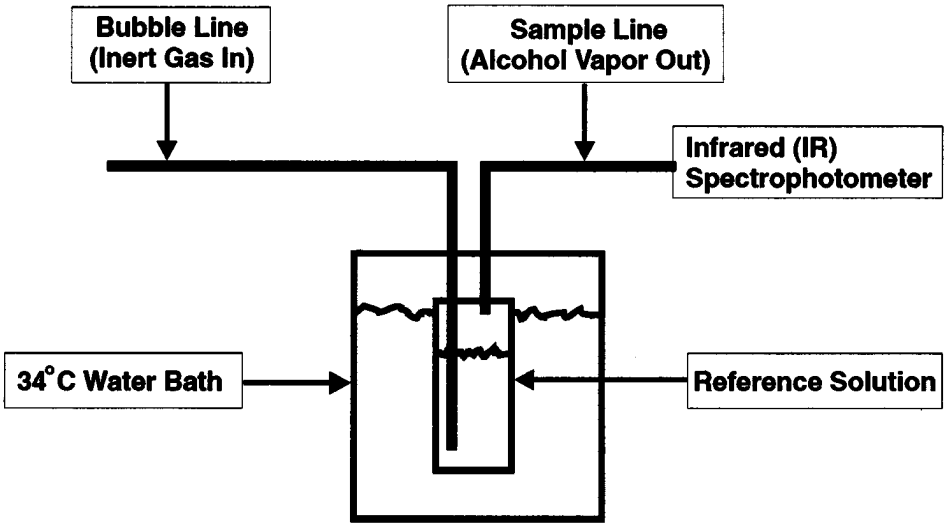

BILLING CODE: 4910–59–C

Appendix B—Conforming Products List of Calibrating Units for Breath Alcohol Testers [Manufacturer and Calibrating Unit].[1]

1. CMI, Inc., Owensboro, KY:
   - Toxitest II
2. Federal Signal Corporation, CMI, Inc., Minturn, CO:
   - Toxitest Model ABS120*
3. Gateway Airgas, Inc. (Formerly known as AG Specialty Gas, and Acetylene Gas Company), St. Louis, MO.
   - Ethanol Breath Alcohol Standard (a dry gas standard).
4. Guth Laboratories, Inc., Harrisburg, PA:
   - Model 34C Simulator[2]
   - Model 3412
   - Model 10–4
   - Model 1214
5. Intoximeters, Inc., St. Louis, MO:
   - Alco Breath Alcohol Standard* (a dry gas standard)
6. Lion Laboratories, plc, Cardiff, Wales, UK (a subsidiary of CMI, Inc.)
   - ◆ AlcoCal Gas Standard (a dry gas standard).
7. Liquid Technology Corporation, Orlando, FL
   - ◆ Alcohol-in-Nitrogen Calibrating Unit (a dry-gas standard).
8. Luckey Laboratories, Inc., San Bernadino, CA:
   - Simulator*
9. National Draeger, Inc., Durango, CO.
   - Mark II–A
10. PLD of Florida, Inc., Rockledge, FL:
   - BA 500
11. Protection Devices, Inc., U.S. Alcohol Testing, Inc., Rancho Cucamonga, CA:
   - LS34 Model 6100*
12. Repco Marketing, Inc., Raliegh, NC:
   - AS–1
   - Model 3402C
13. Scott Specialty Gases, Inc., Plumsteadville, PA
   - Model EBS™ Gaseous Ethanol Breath Standard (a dry-gas standard).
14. Smith & Wesson Electronic Co., Springfield, MA:
   - Mark II–A Simulator*
15. Systems Innovation, Inc., Hallsteaed, PA
   - True-Test MD 901*
16. U.S. Alcohol Testing, Rancho Cucamonga, CA:
   - Alco-Simulator 2000*
   - Alco—Simulator 61000

* Instruments marked with an asterisk (*) meet the Model Specifications in 49 FR 48864 (December 14, 1984), i.e. instruments tested at 0.050, 0.100, and 0.150). Instruments not marked with an asterisk meet the model specifications detailed in this notice, and were tested at 0.020, 0.040, 0.080, and 0.160 BrAC.

[FR Doc. 97–21331 Filed 8–12–97; 8:45 am]

BILLING CODE 4910–59–P

[1] Infra-red (IR) and fuel cell breath testers may be calibrated with either wet-bath or dry-gas CUs. However, it is inadvisable to use dry gas CUs when calibrating gas chromatograph EBTs.

[2] Several variations of the Model 34C Simulator have also been submitted to NHTSA for evaluation and meet these Model Specifications. They are: Model 34C Cal DOJ; Model 34–C–FM; and 34C–NPAS.

DEPARTMENT OF TRANSPORTATION

National Highway Traffic Safety Administration

[Docket No. 97–051; Notice 1]

Notice of Receipt of Petition for Decision That Nonconforming 1987–1997 Kawasaki ZX400 Motorcycles Are Eligible for Importation

AGENCY: National Highway Traffic Safety Administration, DOT.

ACTION: Notice of receipt of petition for decision that nonconforming 1987–1997 Kawasaki ZX400 motorcycles are eligible for importation.

SUMMARY: This document announces receipt by the National Highway Traffic Safety Administration (NHTSA) of a petition for a decision that 1987–1997 Kawasaki ZX400 motorcycles that were not originally manufactured to comply with all applicable Federal motor vehicle safety standards are eligible for importation into the United States because (1) they are substantially similar to vehicles that were originally manufactured for importation into and sale in the United States and that were certified by their manufacturer as complying with the safety standards, and (2) they are capable of being readily altered to conform to the standards.

DATES: The closing date for comments on the petition is September 12, 1997.

ADDRESSES: Comments should refer to the docket number and notice number, and be submitted to: Docket Section, Room 5109, National Highway Traffic Safety Administration, 400 Seventh St.,

SW, Washington, DC 20590. [Docket hours are from 9:30 am to 4 pm]

FOR FURTHER INFORMATION CONTACT: George Entwistle, Office of Vehicle Safety Compliance, NHTSA (202–366–5306).

SUPPLEMENTARY INFORMATION:

Background

Under 49 U.S.C. § 30141(a)(1)(A), a motor vehicle that was not originally manufactured to conform to all applicable Federal motor vehicle safety standards shall be refused admission into the United States unless NHTSA has decided that the motor vehicle is substantially similar to a motor vehicle originally manufactured for importation into and sale in the United States, certified under 49 U.S.C. § 30115, and of the same model year as the model of the motor vehicle to be compared, and is capable of being readily altered to conform to all applicable Federal motor vehicle safety standards.

Petitions for eligibility decisions may be submitted by either manufacturers or importers who have registered with NHTSA pursuant to 49 CFR Part 592. As specified in 49 CFR 593.7, NHTSA publishes notice in the **Federal Register** of each petition that it receives, and affords interested persons an opportunity to comment on the petition. At the close of the comment period, NHTSA decides, on the basis of the petition and any comments that it has received, whether the vehicle is eligible for importation. The agency then publishes this decision in the **Federal Register**.

Champagne Imports, Inc. of Lansdale, Pennsylvania (''Champagne'') (Registered Importer 90–009) has petitioned NHTSA to decide whether 1987–1997 Kawasaki ZX400 motorcycles are eligible for importation into the United States. The vehicles which Champagne believes are substantially similar are 1987–1997 Kawasaki ZX600 motorcycles that were manufactured for importation into, and sale in, the United States and certified by their manufacturer as conforming to all applicable Federal motor vehicle safety standards.

The petitioner claims that it carefully compared non-U.S. certified 1987–1997 Kawasaki ZX400 motorcycles to their U.S. certified counterparts, and found the vehicles to be substantially similar with respect to compliance with most Federal motor vehicle safety standards.

Champagne submitted information with its petition intended to demonstrate that non-U.S. certified 1987–1997 Kawasaki ZX400 motorcycles, as originally manufactured, conform to many Federal motor vehicle safety standards in the same manner as their U.S. certified counterparts, or are capable of being readily altered to conform to those standards.

Specifically, the petitioner claims that non-U.S. certified 1987–1997 Kawasaki ZX400 motorcycles are identical to their U.S. certified counterparts with respect to compliance with Standard Nos. 106 *Brake Hoses,* 111 *Rearview Mirrors,* 116 *Brake Fluid,* 119 *New Pneumatic Tires for Vehicles other than Passenger Cars,* and 122 *Motorcycle Brake Systems.*

Petitioner also contends that the vehicles are capable of being readily altered to meet the following standards, in the manner indicated:

Standard No. 108 *Lamps, Reflective Devices and Associated Equipment:* installation of U.S.-model headlamp assemblies.

Standard No. 120 *Tire Selection and Rims for Vehicles other than Passenger Cars:* installation of a tire information placard.

Standard No. 123 *Motorcycle Controls and Displays:* installation of a U.S. model speedometer calibrated in miles per hour.

The petitioner also states that vehicle identification number plates meeting the requirements of 49 CFR Part 565 will be affixed to non-U.S. certified 1987–1997 Kawasaki ZX400 motorcycles.

Comments should refer to the docket number and be submitted to: Docket Section, National Highway Traffic Safety Administration, Room 5109, 400 Seventh Street, S.W., Washington, DC 20590. It is requested but not required that 10 copies be submitted.

All comments received before the close of business on the closing date indicated above will be considered, and will be available for examination in the docket at the above address both before and after that date. To the extent possible, comments filed after the closing date will also be considered. Notice of final action on the petition will be published in the **Federal Register** pursuant to the authority indicated below.

Authority: 49 U.S.C. 30141(a)(1)(A) and (b)(1); 49 CFR 593.8; delegations of authority at 49 CFR 1.50 and 501.8.

Issued on: August 7, 1997.

Marilynne Jacobs,

Director, Office of Vehicle Safety Compliance.

[FR Doc. 97–21334 Filed 8–12–97; 8:45 am]

BILLING CODE 4910–59–P

DEPARTMENT OF THE TREASURY

Bureau of Alcohol, Tobacco and Firearms

Proposed Collection; Comment Request

ACTION: Notice and request for comments.

SUMMARY: The Department of the Treasury, as part of its continuing effort to reduce paperwork and respondent burden, invites the general public and other Federal agencies to take this opportunity to comment on proposed and/or continuing information collections, as required by the Paperwork Reduction Act of 1995, Pub. L. 104–13 (44 U.S.C. 3506(c)(2)(A)). Currently, the Bureau of Alcohol, Tobacco and Firearms within the Department of the Treasury is soliciting comments concerning the Application for License Under 18 U.S.C. Chapter 44, Firearms.

DATES: Written comments should be received on or before October 14, 1997 to be assured of consideration.

ADDRESSES: Direct all written comments to Linda Barnes, Bureau of Alcohol, Tobacco and Firearms, 650 Massachusetts Avenue, NW., Washington, DC 20226, (202) 927–8930.

FOR FURTHER INFORMATION CONTACT: Requests for additional information or copies of the form(s) and instructions should be directed to Nicholas Colucci, Firearms and Explosives Operations Branch, 650 Massachusetts Avenue, NW., Washington, DC 20226, (202) 927–8310.

SUPPLEMENTARY INFORMATION:

Title: Application for License Under 18 U.S.C. Chapter 44, Firearms.

OMB Number: 1512–0042.

Form Number: ATF F 7 (5310.12).

Abstract: This form is used by the public when applying for a Federal firearms license as a dealer, importer, or manufacturer. The information requested on the form establishes eligibility for the license. There is no record retention requirement associated with this form due to fact that there is no regulatory requirement to maintain records.

Current Actions: Revisions have been made to the form as a result of new laws and regulations. A third line is added to item 7. for the applicant to list a 24-hour emergency telephone number, if different from either of the first two numbers listed. This revision is made to better implement a provision of the Violent Crime Control and Law Enforcement Act of 1994 that requires

licensees to respond to ATF firearms trace requests within 24 hours. The column for license renewal fees in item 10c. has been eliminated. ATF F 7 is no longer used for the renewal of licenses. Therefore, the identification of license renewal fees is not a relevant function of this form. A revision to the form includes the addition to item 14. of ''military'' as a category of licensed premises. This information will aid ATF in determining the applicant's compliance with the requirement for suitable premises from which business may be conducted. Question 22F. has been added as a result of the Violent Crime Control and Law Enforcement Act of 1994. This statute amended the Gun Control Act to make it unlawful for any person subject to a court order restraining them from harassing, stalking, or threatening an intimate partner or child of such partner to ship, transport, possess, or receive firearms. Question 23E. has been added as a result of the Omnibus Consolidated Appropriations Act of 1997, which amended the Gun Control Act. This amendment made it unlawful for any person convicted of a misdemeanor crime of domestic violence to ship, transport, possess, or receive firearms or ammunition in or affecting interstate commerce. There have been format changes to the form so the form will be more understandable to the applicant.

Type of Review: Extension with changes.

Affected Public: Business or other for-profit, individuals or households.

Estimated Number of Respondents: 10,000.

Estimated Time Per Respondent: 1 hour and 15 minutes.

Estimated Total Annual Burden Hours: 12,500.

Request For Comments

Comments submitted in response to this notice will be summarized and/or included in the request for OMB approval. All comments will become a matter of public record. Comments are invited on: (a) whether the collection of information is necessary for the proper performance of the functions of the agency, including whether the information shall have practical utility; (b) the accuracy of the agency's estimate of the burden of the collection of information; (c) ways to enhance the quality, utility, and clarity of the information to be collected; (d) ways to minimize the burden of the collection of information on respondents, including through the use of automated collection techniques or other forms of information technology; and (e) estimates of capital or start-up costs and costs of operation, maintenance, and purchase of services to provide information.

Dated: August 8, 1997.

John W. Magaw,

Director.

[FR Doc. 97–21529 Filed 8–12–97; 8:45 am]

BILLING CODE 4810–31–P

DEPARTMENT OF THE TREASURY

Office of Thrift Supervision

Proposed Agency Information Collection Activities

AGENCY: Office of Thrift Supervision, Treasury.

ACTION: Notice and request for comments.

SUMMARY: The Department of the Treasury, as part of its continuing effort to reduce paperwork and respondent burden, invites the general public and other Federal agencies to take this opportunity to comment on proposed and/or continuing information collections, as required by the Paperwork Reduction Act of 1995. Currently, the Office of Thrift Supervision within the Department of the Treasury is soliciting comments concerning the Thrift Financial Report.

DATES: Written comments should be received on or before October 14, 1997 to be assured of consideration.

ADDRESSES: Send comments to Manager, Dissemination Branch, Records Management and Information Policy, Office of Thrift Supervision, 1700 G Street, NW, Washington, DC 20552, Attention 1550–0023. These submissions may be hand delivered to 1700 G Street, NW. From 9:00 a.m. to 5:00 p.m. on business days; they may be sent by facsimile transmission to FAX Number (202) 906–7755; or they may be sent by e-mail: public.info@ots.treas.gov. Comments sent by facsimile transmission that are over 25 pages in length should be sent to FAX Number (202) 906–6956. Those commenting by e-mail should include their name and telephone number. Comments will be available for inspection at 1700 G Street, NW., from 9:00 a.m. until 4:00 p.m. on business days.

FOR FURTHER INFORMATION CONTACT: Trudy Reeves, Financial Reporting Division, Office of Thrift Supervision, 1700 G Street, NW., Washington, DC 20552, (202) 906–7317. Additional information is also available by requesting Document Number 80053 on OTS's Publifax line at (202) 906–5660 or by calling (202) 906–6078.

SUPPLEMENTARY INFORMATION:

Title: Thrift Financial Report.

OMB Number: 1550–0023.

Form Numbers: OTS 1313, OTS 1568.

Abstract: The information collections described herein will apply to all savings associations. The collections are necessary to monitor and supervise the thrift industry.

Current Actions: After reviewing its current supervisory and examination needs, the OTS is proposing to make certain changes to the Thrift Financial Report (TFR) effective with the March 31, 1998 report. The OTS has limited the proposed changes for 1998 to minimize the burden to the savings and loan industry. Overall, the changes will reduce the estimated burden associated with the TFR. A description of the proposed changes follows:

- Add a question in Schedule SQ as follows:

Does the reporting association have a Subchapter S election in effect for federal income tax purposes for the current tax year?

This data item will provide a means of identifying associations electing Subchapter S status. Because this is a yes/no question and it is anticipated that it will be answered ''yes'' by less than 20% of the industry, it is not projected to add any additional burden to the industry.

- Modify Schedule CCR

The revisions will reduce CCR by approximately 14 data items and add 4 additional data items which will be automatically generated by the electronic filing software provided to all associations by the OTS. The deleted section is the worksheet calculation of the tangible capital requirement.

The four Prompt Corrective Action (PCA) ratios will be added at the end of the form. These will be generated by the electronic filing software and therefore have no burden associated with them. They will provide instant feed-back to associations as they complete the form and would be regenerated whenever an amendment to CCR is filed. This addition would eliminate the need for running a separate program to calculate these ratios each time amendments are filed.

- Year 2000 Change

SQ170 and all date fields in the electronic filing software will be expanded to accommodate four digits in the year field.

Type of Review: Revision.

Affected Public: Business or For Profit.

Estimated Number of Respondents and Recordkeepers: 1271.

Estimated Time Per Respondent: 33 hours average.

Estimated Total Annual Burden Hours: 167,772 hours.

Request for Comments: Comments submitted in response to this notice will be summarized and/or included in the request for OMB approval. All comments will become a matter of public record. Comments are invited on: (a) Whether the collection of information is necessary for the proper performance of the functions of the agency, including whether the information shall have practical utility; (b) the accuracy of the agency's estimate of the burden of the collection of information; (c) ways to enhance the quality; (d) ways to minimize the burden of the collection of information on respondents, including the use of automated collection techniques or other forms of information technology; and (e) estimates of capital or start-up costs and costs of operation, maintenance, and purchase of services to provide information.

Dated: August 7, 1997.

Catherine C. M. Teti,

Director, Records Management and Information Policy.

[FR Doc. 97–21338 Filed 8–12–97; 8:45 am]

BILLING CODE 6720–01–P

federal register

Wednesday
August 13, 1997

Part II

Department of Agriculture

Agricultural Marketing Service

7 CFR Part 29, et al.

Removal of U.S. Grade Standards and Other Selected Regulations; Interim Final Rule

DEPARTMENT OF AGRICULTURE

Agricultural Marketing Service

7 CFR Parts 29, 31, 32, 36, 52, 53, 54, and 58

[Docket Number FV–95–303]

Removal of U.S. Grade Standards and Other Selected Regulations

AGENCY: Agricultural Marketing Service, USDA.

ACTION: Interim final rule with request for comments.

SUMMARY: This document amends an interim final rule that removed certain voluntary U.S. grade standards and other selected regulations covering a number of agricultural commodities from the Code of Federal Regulations (CFR). This rule will remove standards that had been retained pending completion of rulemaking at the time the interim final rule was published, reinstate the U.S. standards for Wisconsin Cigar-Binder Tobacco, and regulations related to the purchase of samples of wool and of mohair grades. Lastly, this rule will add a new part titled ''Procedures by Which the Agricultural Marketing Service Develops, Revises, Suspends, or Terminates Voluntary Official Grade Standards.'' These procedures reflect the steps that were discussed in the original interim rule concerning the procedures that AMS will follow when developing, revising, suspending, or terminating voluntary U.S. grade standards. This action is part of the National Performance Review Program to eliminate unnecessary regulations and improve those that remain in force.

DATES: Effective date: August 13, 1997. Comments must be received by October 14, 1997.

ADDRESSES: Interested persons are invited to submit written comments concerning this interim final rule. Comments must be submitted in duplicate, signed, include the address of the sender, and should note the date and page number of this issue of the **Federal Register**. Commentors are encouraged to include definitive information which explains and supports their views. Written comments may be mailed to Eric Forman, Deputy Director, Fruit and Vegetable Division, USDA, AMS, Room 2085–S, P.O. Box 96456, Washington, DC 20090–6456.

Comments will be available for public inspection during regular business hours in Room 2085—South Building; 14th Street and Independence Avenue, SW., Washington, DC.

FOR FURTHER INFORMATION CONTACT: Eric Forman, Deputy Director, Fruit and Vegetable Division, USDA, AMS, Room 2085–S, P.O. Box 96456, Washington, DC 20090–6456, (202) 690–0262.

SUPPLEMENTARY INFORMATION: This regulatory action is being taken as part of the National Performance Review program to eliminate unnecessary regulations and improve those that remain in force.

Executive Order 12866

The Department of Agriculture (Department) is issuing this rule in conformance with Executive Order 12866.

Executive Order 12988

This rule has been reviewed under Executive Order 12988, Civil Justice Reform. This rule is not intended to have preemptive effect with respect to any State or local laws, regulations, or policies unless they present an irreconcilable conflict with this rule. This rule is not intended to have retroactive effect. There are no administrative procedures which must be exhausted prior to any judicial challenge to this rule or the application of its provisions.

Effect on Small Entities

This action was reviewed under the Regulatory Flexibility Act (RFA) (5 U.S.C. 601 *et seq.*). The Administrator of AMS has determined that this action will not have a significant economic impact on a substantial number of small entities. The purpose of the RFA is to fit regulatory actions to the scale of businesses subject to such actions in order that small businesses will not be unduly or disproportionately burdened.

The United States standards issued or revised pursuant to the Agricultural Marketing Act, and issued thereunder, are administered under the direction of the Administrator of AMS and, as in the past, will be based on input from interested parties, including various industries which are mostly comprised of small entities as defined by the Small Business Administration (13 CFR 121.601). Other users of the various standards are government agencies including USDA's Farm Services Agency and the Foreign Agricultural Service.

Removal of voluntary standards and other selected regulations covering a number of agricultural commodities from the CFR is expected to benefit the affected industries because it will provide for more timely improvement in the standards in accordance with the procedures included in this interim final rule. Notice of any actions as to the development, revision, suspension or termination of U.S. standards will be published in the **Federal Register** for comment to ensure that all interested parties, including small businesses as well as the general public, have an opportunity to have their views considered regarding any actions taken concerning the U.S. grade standards.

This action amends an interim final rule that previously removed most of the voluntary U.S. grade standards and other selected regulations covering a number of agricultural commodities (dairy products, tobacco, wool, mohair, fresh and processed fruits and vegetables, livestock, meats and meat products, eggs, and poultry and rabbit products) from the CFR. This interim final rule will: Remove those standards from the CFR that had been retained pending completion of rulemaking at the time the interim final rule was published; reinstate in the CFR the U.S. standards for Wisconsin Cigar-Binder Tobacco (U.S. Types 54 and 55); and, reinstate in the CFR those regulations related to the purchase of samples of grades of wool and of mohair. The U.S. standards for grades of wool and mohair will be maintained in AMS and not as published regulations in the CFR. Lastly, this rule will specify a new CFR part titled ''Procedures by Which the Agricultural Marketing Service Develops, Revises, Suspends, or Terminates Voluntary Official Grade Standards.'' These procedures reflect the steps that were discussed in the original interim rule concerning the procedures that AMS will follow when developing, revising, suspending, or terminating U.S. grade standards.

Paperwork Reduction Act

In accordance with the provisions of the Paperwork Reduction Act, the information collection requirements contained in the provisions to be amended have been previously approved by the Office of Management and Budget.

Background

The Secretary of Agriculture is authorized under various statutes to provide various services to provide Federal grading/certification services and to develop and establish efficient marketing methods and practices of agricultural commodities. The ultimate goal for more than 75 years, AMS has facilitated the marketing of agricultural commodities by developing official U.S. grade standards which provide a uniform language that may be used to describe the characteristics of more than 450 commodities as valued by the marketplace. These standards are

widely used in private contracts, government procurement, marketing communication and, for some commodities, consumer information.

Although use of most of the U.S. standards is voluntary, they have through the years been promulgated as regulations and codified in the CFR. Rapid changes in consumer preferences, together with associated changes in commodity characteristics, processing technology, and marketing practices have often out paced the revision of existing or, the issuance of new regulations. As a result, the marketplace has been in some instances burdened with outdated trading language. The President's regulatory review initiative has provided the impetus to develop new approaches to meet more effectively the needs of U.S. industry, government agencies, and consumers by reducing the regulatory burden. As part of this initiative, AMS determined that certain regulations that were in the CFR which could be administered under the authority of AMS should be removed from the CFR.

With this objective, on December 4, 1995, AMS published an interim final rule with a request for comments that removed most of the voluntary U.S. standards and related regulations from the CFR. This action included all the standards except those that at the time were in rulemaking, incorporated by reference in marketing orders/agreements appearing at 7 CFR Parts 900 through 999, or those used to implement government price supports. Those grade standard regulations have remained in the CFR, even though the text will also be available as AMS standards along with all other grade standards.

On March 11, 1996, in response to requests by representatives of the dairy and meat industries, USDA published a notice in the **Federal Register** (61 FR 9589–9590) that it would reopen and extend the comment period until July 10, 1996. The industry association comments asked for more time to evaluate how the changes AMS was initiating would impact their respective industries.

Twenty one comments were received from interested persons in connection with the interim final rule. These comments were received from a variety of industry representatives including trade associations, a food processor, a State department of agriculture and other interested persons. The majority of comments were commodity specific and are addressed on an AMS divisional basis with regard to the appropriate commodity topic. For example, nine comments were received concerning the wool and mohair standards and are discussed under the paragraph heading *Livestock and Seed Division*. Several comments discussed in general the removal of standards from the CFR.

The American Meat Institute expressed its concern as to what would be required of AMS with regard to new or revised standards. They questioned the AMS responsibility to solicit input from industry when developing and revising U.S. grade standards if the standards are not published in the CFR. They question whether AMS would follow the same procedures as provided under the Administrative Procedures Act (APA) (5 U.S.C. 551 et seq.). The APA provides for the public to participate in rulemaking by commenting on proposed rules. The American Meat Institute requested assurance that AMS still be required to publish actions involving U.S. standards in the **Federal Register** for comment.

The AMS procedures described in the interim final rule provided for interested persons to have the opportunity to comment on actions involving U.S. grade standards and to have their views considered. Accordingly, taking into consideration the comments received on the December 4, 1995, interim final rule, this rule will establish the ''Procedures By Which The Agricultural Marketing Service Develops, Revises, Suspends, or Terminates Voluntary Official Grade Standards'' in 7 CFR Part 36. This action will set forth in the regulations, the procedures the agency will follow that provide for public comment and will be considered by AMS before formal action is taken on a proposal even though the standards would not be published in the CFR. In addition to providing for AMS to solicit comments through the **Federal Register**, this rule will set forth the procedures that AMS will follow when developing a new standard or when revising existing standards. This action will also ensure that the commodity divisions in AMS follow the same procedures in developing and maintaining official U.S. grade standards for dairy, fresh and processed fruits and vegetables, livestock, meats and meat products, eggs, poultry and rabbit products, tobacco, wool, mohair and other agricultural products. As has been longstanding practice, the standards for the various commodities will be administered by the respective commodity divisions within AMS.

Several additional comments were received that were not commodity, product or division specific. Two commentors, including a food service distributor, and other interested persons, objected to the removal of the U.S. standards from the CFR because they liked the convenience of all of the standards being available from a single source from the government or most libraries. AMS agrees that the standards should be readily available and believes that the procedures provided for in this rule will accomplish that objective. In addition to paper copies which are readily available from the individual commodity divisions, AMS will provide the standards in a number of formats, including electronic format (computer diskettes or cd rom). In March 1997, the U.S. grade standards for commodities administered under AMS were posted on the Internet. Therefore any individual or organization with access to the Internet can currently view, copy or print copies of the standards from the Internet (http://www.ams.usda.gov/standards).

Comments from the National Association of Perishable Agricultural Receivers, the American Frozen Food Institute, and Division of Inspection Services with the Department of Food and Agriculture for the State of California supported AMS in its efforts of streamlining government and working to ensure that the services it provides are responsive to the industry it serves.

When the December 4, 1995, interim final rule was published it was organized by AMS commodity division since each division is basically commodity, products, or product group specific. This arrangement provided industries or others with specific commodity interest with an easier understanding of what changes were being initiated. Likewise, commodity specific responses to the interim final rule are being separated by commodity division. The following discusses the comments received on the interim final rule, the agencies response to the various comments, the action being taken in response to those comments, and the standards this rule will remove from the CFR that were in the rulemaking process at the time the December 4 interim final rule was published and would be subject to removal from the CFR at a later time.

Tobacco Division

One comment was received concerning tobacco. The Northern Wisconsin Cooperative Tobacco Pool Incorporated of Wisconsin requested that the grade standards for Wisconsin Cigar-Binder Tobacco be retained in the CFR because the cooperative uses that standard as a part of their price support program. The agency agrees, this standard is a part of the USDA price support program and this rule will reinstate the ''Official Standard Grades

for Wisconsin Cigar-Binder Tobacco (U.S. Types 54 and 55)'' in their original location, sections 29.6001-6161 of 7 CFR Part 29.

Livestock and Seed Division

The wool and mohair standards (7 CFR Parts 31 and 32, respectively) removed under the interim final rule from the CFR included language authorizing the collection of fees for sets of standard samples depicting the various grades. Since the Agency had not for sometime graded product under these standards and believed that the standards were no longer being used, the decision was made to drop the standards completely.

This action elicited nine comments from a variety of industry trade associations (Mohair Council of America, Empire Sheep Producers Association, Inc., American Sheep Industry Association, Inc., Utah Wool Marketing Association, U.S. Wool Marketing Association, Inc., and American Textile Manufacturers Institute) and other interested persons. All of the commentors pointed out that, although there was no official grading of wool or mohair, the grades and standards were cited in contracts for trading of wool and mohair and were used as a basis for establishing prices. Also, AMS Market News reports of wool and mohair trading cited the grades as the basis for explaining price differentials. Several commentors asserted that without the official grade standards there would be no basis for settling claims in cases where the quality of product delivered was in dispute. Accordingly AMS will reinstate the U.S. standards for grades of wool and for mohair as official U.S. standards that will be maintained in AMS along with the other voluntary commodity standards. As for the sections of those standards relevant to the fees and for method of purchasing ''standard samples'' of wool and of mohair, those regulations will be reinstated in their original location in sections 31.400–402 of 7 CFR Part 31 and sections 32.400–403 of 7 CFR Part 32, respectively.

The following U.S. standards were retained in the CFR because they were in rulemaking at the time the interim final rule was published. This rule will remove those standards from the CFR.

	Standards being removed from the CFR
7 Part 53	Livestock (Grading, Certification, and Standards).
	Subpart B—Standards.
53.201–206	Cattle.
7 Part 54	Meats, Prepared Meats, and Meat Products (Grading, Certification, and Standards).
	Subpart B—Standards.
54.102–107	Carcass beef.

Fruit and Vegetable Division (Processed Products Branch)

One comment was received from the National Food Processors Association (NFPA) expressing particular interest in the voluntary U.S. grade standards for canned and frozen fruits, vegetables, and juices administered by the Fruit and Vegetable Division's Processed Products Branch. The NFPA supported the action taken in the interim final rule.

The following U.S. standards were retained in the CFR because they were in rulemaking at the time the interim final rule was published. This rule will remove those standards from the CFR.

	Standards being removed from the CFR
7 Part 52	Processed Fruits and Vegetables, Processed Products thereof, and Certain Other Processed Food Products.
52.721–729	Subpart—United States Standards for Grades of Frozen Cauliflower.
52.1511–1520 ..	Subpart—United States Standards for Grades of Frozen Okra.
52.1661–1674 ..	Subpart—United States Standards for Grades of Frozen Field Peas and Frozen Black-eye Peas.
52.2321–2330 ..	Subpart—United States Standards for Grades of Frozen Green Beans and Frozen Wax Beans.

Dairy Division

Three dairy trade associations (American Dairy Products Institute, International Dairy Foods Association, and National Milk Producers Federation) responded during the comment period. Each association opposed the removal of dairy product grade standards from the CFR. The following reasons were provided for this opposition:

1. The dairy industry is uniquely regulated and differs from other AMS industries in that several Federal agencies govern virtually every aspect relating to the production, processing, and marketing of dairy products. Because of this extensive government involvement, the dairy industry relies on the CFR as a central source for all relevant federal regulations.

Several Federal agencies have roles with respect to the manner in which milk and milk products are marketed in the United States. However, these roles do not substantially differ from other products for which AMS also provides quality grade standards. Any reliance on the CFR as a central source of U.S. grade standards will not significantly change with the removal of AMS grade standards. This action only affects the voluntary standards developed by AMS and does not affect requirements of other Federal agencies. This action will enhance the process for keeping grade standards current by permitting AMS to develop and revise standards more quickly and efficiently in response to the changing needs of the dairy industry and the consumer.

A concern of AMS is to provide information to the public in a timely manner. The CFR is updated and published annually. Therefore, standards published in the CFR do not necessarily provide the most current information since new standards may be developed and existing standards may be revised throughout the year. Up-to-date printed standards are currently available from AMS and will soon also be available by electronic access. This approach enhances the availability of updated information and lessens the possibility that existing standards have been changed or new standards have not been included in the currently available CFR.

2. Dairy product grade standards serve unique marketing functions for the dairy industry and should not be removed from the CFR. In instances where dairy products are used as ingredients, buyers use grade standards to describe ingredient quality and identify desired product characteristics. Manufacturers of these ingredients provide certification that their product meets the appropriate requirements of a grade standard. Also, in instances where grade identification is displayed on consumer-ready product, local manufacturers who manufacture non-brand product are able to communicate quality to the consumer.

AMS grade standards often play a key role in the marketing of agricultural products, both for the manufacturer and the consumer. AMS grade standards will still exist, will be readily accessible, and will continue to meet the requirements of the industry and the consumer. Only their annual publication in the CFR will be affected.

In order to maximize the effectiveness of these standards, they must keep pace with changes in technology as well as user and consumer preferences. The National Performance Review program

has provided the opportunity to reconsider the manner in which grade standards are developed and revised. This action enhances the ability of AMS to more efficiently address industry and consumer needs. This should improve the effectiveness of dairy standards for companies that use them to define ingredient quality and to communicate finished-product quality to consumers.

3. The current system of publication of all relevant regulations in the CFR, with notice of all changes to those regulations published in the **Federal Register**, is the most efficient means of bridging the gap between the regulated industry and the government regulators.

Publication in the **Federal Register** informs the public of actions that are being considered or implemented concerning the development or revision of grade standards. This has been done with proposed rule and final rule publication in the **Federal Register**. With the removal of grade standards from the CFR, the manner in which AMS notifies the public of these considerations and action will not change significantly since publication in the **Federal Register** will still occur. AMS is publishing in this amended interim final rule procedures that provide for **Federal Register** publication of proposed actions with request for public comment, as well as publication of the final action taken by AMS. AMS will publish these actions as notices in the **Federal Register** and will continue to provide for public participation.

4. The removal of AMS quality grade standards from the CFR would not support the National Performance Review initiative to eliminate regulations, but merely shift these standards from the CFR to another document. This action would increase the work of Government officials and require the creation of a new AMS publication. In addition, it is unclear how the Government will realize savings and increased efficiencies.

The President's regulatory review initiative provided an impetus to develop new approaches to more effectively meet the needs of U.S. industry, government agencies, and consumers and still reduce the regulatory burden. Because AMS grade standards play a key role in the marketing of agricultural products, the Department chose not to eliminate these standards. This action removes AMS standards from annual publication in the CFR. As a result, it enhances the ability of AMS to be more responsive to rapid changes in consumer preferences, processing technology, and marketing practices. This action will not increase the work required by AMS employees since printed grade standards are currently available for distribution, and maintenance time is minimal once standards are prepared for electronic access. The Department has estimated that this action will result in a savings of more than $1 million over the next five years in CFR publication costs.

5. The removal of AMS grade standards would hamper rather than enhance the electronic availability of these documents. Currently the full text of the CFR is readily accessible on the Internet, and relocation of the standards would result in users not being able to locate the information.

USDA has made available on the Internet information concerning the programs it administers, including AMS programs. AMS is the agency responsible for the development and revision of quality grade standards. Users of these standards are familiar with the agency, and therefore AMS is the logical choice when accessing grade standard information on the Internet. The inclusion of grade standards in the AMS Home Page will provide updated grade standard information that will be easily accessible and downloadable.

The following U.S. standards were retained in the CFR because they were in rulemaking at the time the interim final rule was published. This rule will remove those standards from the CFR.

	Standards being removed from the CFR
7 Part 58	Grading and Inspection, General Specifications for Approved Plants and Standards for Grades of Dairy Products.
58.2465–2471 ..	Subpart I—United States Standards for Grades of Monterey (Monterey Jack) Cheese.
58.2525–2541 ..	Subpart L—United States Standards for Grades of Nonfat Dry Milk (Spray Process).
58.2750–2759 ..	Subpart U—United States Standards for Instant Nonfat Dry Milk.

Pursuant to 5 U.S.C. 553, it is also found and determined upon good cause that it is impracticable, unnecessary, and contrary to the public interest to give preliminary notice prior to putting this rule into effect and that good cause exists for not postponing the effective date of this rule until 30 days after publication in the **Federal Register** because: (1) The standards are voluntary; (2) No changes are being made to the standards by this docket; (3) New procedures are included for developing new and revising existing U.S. standards which will provide an improved form of delivery standards for those who use U.S. standards. (4) This is consistent with the President's regulatory review initiative. (5) This rule amends a previously issued interim final rule removing most of the voluntary U.S. grade standards and other selected regulations covering a number of agricultural commodities from the CFR.

List of Subjects

7 CFR Part 29

Administrative practice and procedure, Advisory committees, Government publications, Imports, Pesticides and pests, Reporting and recordkeeping requirements, Tobacco.

7 CFR Part 31

Wool.

7 CFR Part 32

Mohair.

7 CFR Part 36

Administrative practice and procedure, Agricultural commodities, Food grades and standards, Reporting and recordkeeping requirements.

7 CFR Part 52

Food grades and standards, Food labeling, Frozen foods, Fruit juices, Fruits, Reporting and recordkeeping requirements, Vegetables.

7 CFR Part 53

Cattle, Hogs, Livestock, Sheep.

7 CFR Part 54

Food grades and standards, Food labeling, Meat and meat products.

7 CFR Part 58

Dairy products, Food grades and standards, Food labeling, Reporting and recordkeeping requirements.

For the reasons set forth in the preamble, 7 CFR chapter I is amended as follows:

PART 29—TOBACCO INSPECTION

1. The authority citation for 7 CFR Part 29 continues to read as follows:

Authority: 7 U.S.C. 511b, 511r.

2. In part 29, subpart C, new undesignated center headings and §§ 29.6001 through 29.6161 are added to read as follows:

Subpart C—Standards

Official Standard Grades for Wisconsin Cigar-Binder Tobacco (U.S. Types 54 and 55) [1]

Definitions

Sec.
29.6001 Definitions.[1]
29.6002 Air-cured.
29.6003 Body.
29.6004 Burn.
29.6005 Case (order).
29.6006 Class.
29.6007 Clean.
29.6008 Condition.
29.6009 Crude.
29.6010 Cured.
29.6011 Damage.
29.6012 Dirty.
29.6013 Elasticity.
29.6014 Elements of quality.
29.6015 Foreign matter.
29.6016 Form.
29.6017 General quality.
29.6018 Grade.
29.6019 Grademark.
29.6020 Group.
29.6021 Injury.
29.6022 Leaf scrap.
29.6023 Leaf structure.
29.6024 Length.
29.6025 Lot.
29.6026 Maturity.
29.6027 Nested.
29.6028 No Grade.
29.6029 Offtype.
29.6030 Package.
29.6031 Packing.
29.6032 Quality.
29.6033 Raw.
29.6034 Semicured.
29.6035 Side.
29.6036 Sound.
29.6037 Stem.
29.6038 Stemmed.
29.6039 Stem rot.
29.6040 Strength (tensile).
29.6041 Strips.
29.6042 Sweated.
29.6043 Tobacco.
29.6044 Tobacco products.
29.6045 Type.
29.6046 Type 53.
29.6047 Type 54.
29.6048 Type 55.
29.6049 Undried.
29.6050 Uniformity.
29.6051 Unstemmed.
29.6052 Unsweated.
29.6053 Wet (high-case).
29.6054 Width.

Elements of Quality

29.6081 Elements of quality and degrees of each element.

Rules

29.6086 Rules.
29.6087 Rule 1.
29.6088 Rule 2.
29.6089 Rule 3.
29.6090 Rule 4.
29.6091 Rule 5.
29.6092 Rule 6.
29.6093 Rule 7.
29.6094 Rule 8.
29.6095 Rule 9.
29.6096 Rule 10.
29.6097 Rule 11.
29.6098 Rule 12.
29.6099 Rule 13.
29.6100 Rule 14.
29.6101 Rule 15.
29.6102 Rule 16.
29.6103 Rule 17.
29.6104 Rule 18.

Grades

29.6126 Binder (B Group).
29.6127 Stripper (C Group).
29.6128 Straight Stripped (X Group).
29.6129 Farm Filler (Y Group).
29.6130 Nondescript (N Group).
29.6131 Scrap (S Group).

Summary of Standard Grades

29.6155 Summary of standard grades.

Key to Standard Grademarks

29.6161 Key to standard grademarks.

Definitions

§ 29.6001 Definitions.

As used in these standards, the words and phrases hereinafter defined shall have the indicated meanings so assigned.

§ 29.6002 Air-cured.

Tobacco cured under natural atmospheric conditions. Artificial heat sometimes is used to control excess humidity during the curing period to prevent pole-sweat, pole-burn, and shed-burn in damp weather. Air-cured tobacco should not carry the odor of smoke or fumes resulting from the application of artificial heat.

§ 29.6003 Body.

The thickness and density of a leaf or the weight per unit of surface. (See chart.)

§ 29.6004 Burn.

The duration of combustion or length of time that a tobacco leaf will hold fire after ignition. (See Rule 18.)

§ 29.6005 Case (order).

The state of tobacco with respect to its moisture content.

§ 29.6006 Class.

A major division of tobacco based on method of cure or principal usage.

§ 29.6007 Clean.

Tobacco is described as clean when it contains only a normal amount of sand or soil particles. Leaves grown on the lower portion of the stalk normally contain more sand or dirt than those from higher stalk positions. (See Rule 4.)

§ 29.6008 Condition.

The state of tobacco which results from the method of preparation or from the degree of fermentation. Words used to describe the condition of tobacco are Undried, air-dried, steam-dried, sweating, sweated, and aged.

§ 29.6009 Crude.

A subdegree of maturity. (See Rule 15.)

§ 29.6010 Cured.

Tobacco dried of its sap by either natural or artificial processes.

§ 29.6011 Damage.

The effect of mold, must, rot, black rot or other fungus or bacterial diseases which attack tobacco in its cured state. Tobacco having the odor of mold, must or rot is considered damaged. (See Rule 17.)

§ 29.6012 Dirty.

The state of tobacco containing an abnormal amount of dirt or sand, or tobacco to which additional quantities of dirt or sand have been added. (See Rule 17.)

§ 29.6013 Elasticity.

The flexible, springy nature of the tobacco leaf to recover approximately its original size and shape after it has been stretched. (See chart.)

§ 29.6014 Elements of quality.

Physical characteristics used to determine the quality of tobacco. Words selected to describe degrees within each element are shown in the chart in § 29.6081.

§ 29.6015 Foreign matter.

Any extraneous substance or material such as stalks, suckers, straw, strings, and rubber bands. (See Rule 17.)

§ 29.6016 Form.

The stage of preparation of tobacco such as stemmed or unstemmed.

§ 29.6017 General quality.

The quality of tobacco considered in relation to the type as a whole. General quality is distinguished from the restricted use of the term ''quality'' within a group.

§ 29.6018 Grade.

A subdivision of a type according to group and quality and to other characteristics when they are of sufficient importance to be treated separately.

[1] These standards also apply to Type 53 Havana seed tobacco.

§ 29.6019 Grademark.

In these types a grademark normally consists of a letter to indicate group and a number to indicate quality. For example, B2 means Binder, fair quality.

§ 29.6020 Group.

A type division consisting of one or more grades based on the general quality of tobacco. Groups in these types are: Binder (B), Stripper (C), Straight Stripped (X), Farm Filler (Y), Nondescript (N), and Scrap (S).

§ 29.6021 Injury.

Hurt or impairment from any cause except the fungus or bacterial diseases which attack tobacco in its cured state. (See definition of Damage.) Injury to tobacco may be caused by field diseases, insects, or weather conditions; insecticides, fungicides, or cell growth inhibitors; nutritional deficiencies or excesses; or improper fertilization, harvesting, curing, or handling. Injured tobacco includes dead, burnt, hail-cut, torn, broken, frostbitten, frozen (see Rule 16), sunburned, sun-scalded, bulk-burnt, pole-burnt, shed-burnt, pole-sweated, stem-rotted, bleached, bruised, discolored, or deformed leaves; or tobacco affected by wildfire, rust, frogeye, mosaic, root rot, wilt, black shank, or other diseases. (See Rule 13.)

§ 29.6022 Leaf scrap.

A byproduct of unstemmed tobacco Leaf scrap results from handling unstemmed tobacco and consists of loose and tangled whole or broken leaves.

§ 29.6023 Leaf structure.

The cell development of a leaf as indicated by its porosity. The degrees range from close (slick and tight) to open (porous). (See chart.)

§ 29.6024 Length.

The linear measurement of cured tobacco leaves from the butt of the midrib to the extreme tip.

§ 29.6025 Lot.

A pile, basket, bulk, package, or other definite unit.

§ 29.6026 Maturity.

The degree of ripeness. (See chart.)

§ 29.6027 Nested.

Any tobacco which has been loaded, packed, or arranged to conceal foreign matter or tobacco of inferior grade, quality, or condition. Nested includes any lot of tobacco which contains foreign matter or damaged, injured, tangled, or other inferior tobacco, any of which cannot be readily detected upon inspection because of the way the lot is packed or arranged. (See Rule 17.)

§ 29.6028 No Grade.

A designation applied to a lot of tobacco classified as damaged, dirty, nested, offtype, semicured, or wet; tobacco that is improperly packed, contains foreign matter, or has an odor foreign to the type. (See Rules 5 and 17.)

§ 29.6029 Offtype.

Tobacco of distinctly different characteristics which cannot be classified as Type 53, 54, or 55. (See Rule 17.)

§ 29.6030 Package.

A hogshead, tierce, case, bale, or other securely enclosed parcel or bundle.

§ 29.6031 Packing.

A lot of tobacco consisting of a number of packages submitted as one definite unit for sampling or inspection. It is represented to contain the same kind of tobacco and has a common identification number or mark on each package.

§ 29.6032 Quality.

A division of a group or the second factor of a grade based on the relative degree of one or more elements of quality.

§ 29.6033 Raw.

Tobacco as it appears between the time of harvesting and the beginning of the curing process.

§ 29.6034 Semicured.

Tobacco in the process of being cured or which is partially but not thoroughly cured. Semicured includes tobacco which contains fat stems, wet butts, swelled stems, and tobacco having frozen stems or stems that have not been thoroughly dried in the curing process. (See definition of No Grade and Rule 17.)

§ 29.6035 Side.

A certain phase of quality as contrasted with some other phase of quality or any peculiar characteristic of tobacco.

§ 29.6036 Sound.

Free of damage. (See Rule 4.)

§ 29.6037 Stem.

The midrib or large central vein of a tobacco leaf.

§ 29.6038 Stemmed.

A form of tobacco, including strips and strip scrap, from which the stems or midribs have been removed.

§ 29.6039 Stem rot.

The deterioration of an uncured or frozen stem resulting from bacterial action. Although stem rot results from bacterial action, it is inactive in cured tobacco and is treated as a kind of injury in these types. (See Rule 14.)

§ 29.6040 Strength (tensile).

The stress a tobacco leaf can bear without tearing. (See chart.)

§ 29.6041 Strips.

The sides of a tobacco leaf from which the stem has been removed or a lot of tobacco composed of strips.

§ 29.6042 Sweated.

The condition of tobacco which has passed through one or more fermentations natural to tobacco packed with a normal percentage of moisture. This condition sometimes is described as aged.

§ 29.6043 Tobacco.

Tobacco in its unmanufactured forms as it appears between the time it is cured and stripped from the stalk, or primed and cured, and the time it enters a manufacturing process. Conditioning, sweating, and stemming are not regarded as manufacturing processes.

§ 29.6044 Tobacco products.

Manufactured tobacco, including cigarettes, cigars, smoking tobacco, chewing tobacco, and snuff, which is subject to Internal Revenue tax.

§ 29.6045 Type.

A division of a class of tobacco having certain common characteristics and closely related grades. Tobacco which has the same characteristics and corresponding qualities, colors, and lengths is classified as one type, regardless of any factors of historical or geographical nature which cannot be determined by an examination of the tobacco.

§ 29.6046 Type 53.

That type of cigar-leaf tobacco commonly known as York State or Havana Seed of New York and Pennsylvania, produced principally in the Big Flats and Onondaga sections of New York and extending into Pennsylvania.

§ 29.6047 Type 54.

That type of cigar-leaf tobacco commonly known as Southern Wisconsin Cigar-leaf or Southern Wisconsin Binder-type, produced principally south and east of the Wisconsin River.

§ 29.6048 Type 55.

That type of cigar-leaf tobacco commonly known as Northern Wisconsin Cigar-leaf or Northern Wisconsin Binder-type, produced

principally north and west of the Wisconsin River and extending into Minnesota.

§ 29.6049 Undried.

The condition of unfermented tobacco which has not been air-dried or steam-dried.

§ 29.6050 Uniformity.

A grade requirement designating the percentage of a lot which must meet the specified degree of each element of quality. (See Rule 12.)

§ 29.6051 Unstemmed.

A form of tobacco, including whole leaf and leaf scrap, from which the stems or midribs have not been removed.

§ 29.6052 Unsweated.

The condition of cured tobacco which has not been sweated.

§ 29.6053 Wet (high-case).

Any sound tobacco containing excessive moisture to the extent that it is in unsafe or doubtful-keeping order. Wet applies to any tobacco which is not damaged but which is likely to damage if treated in the customary manner. (See Rule 17.)

§ 29.6054 Width.

The relative breadth of a tobacco leaf expressed in relation to its length. (See chart.)

Elements of Quality

§ 29.6081 Elements of quality and degrees of each element.

These standardized words or terms are used to describe tobacco quality and to assist in interpreting grade specifications. Tobacco attributes or characteristics which constitute quality are designated as elements of quality. The range within each element is expressed by the use of words or terms designated as degrees. These degrees are arranged to show their relative value, but the actual value of each degree varies with type and group.

Elements	Degrees		
Body	Heavy	Medium	Thin.
Maturity	Immature	Mature	Ripe.
Leaf structure	Close	Firm	Open.
Elasticity	Inelastic	Semielastic	Elastic.
Strength (tensile)	Weak	Normal	Strong.
Width	Narrow	.....do	Spready.
Length	(1)	(1)	(1)
Uniformity	(2)	(2)	(2)
Injury tolerance	(2)	(2)	(2)

[1] Expressed in inches.
[2] Expressed in percentages.

Rules

§ 29.6086 Rules.

The application of these official standard grades shall be in accordance with the following rules.

§ 29.6087 Rule 1.

Each grade shall be treated as a subdivision of a particular type. When the grade is stated in an inspection certificate, the type also shall be stated.

§ 29.6088 Rule 2.

The determination of grade shall be based upon a representative sample or a thorough examination of a packing of tobacco.

§ 29.6089 Rule 3.

The grade of unsorted tobacco shall be based upon a representative sample of the packing. A minimum of 10 percent of the bundles or bales shall be selected at random for sampling; a higher percentage may be sampled at the discretion of the inspector. To obtain the sample, a sufficient amount of tobacco shall be drawn to be representative of each selected bale. In determining the grade, the inspector shall consider the quality of all samples. The grade assigned shall represent the quality of the lot as a whole.

§ 29.6090 Rule 4.

Standard grades shall be assigned to clean and sound tobacco only.

§ 29.6091 Rule 5.

Tobacco leaves shall be placed straight in bundles or bales of normal weight, size, and shape with the butts out and tips overlapping from 6 to 8 inches or sufficiently to make a level, solid, and uniform pack. The sides of the bundles shall be completely covered with paper, or other suitable protective material, and tightly bound with not less than three large twines spaced so that the tobacco will be held securely together. Improperly packed tobacco shall be designated as ''No—G.''

§ 29.6092 Rule 6.

The grade assigned to any lot of tobacco shall be a true representation of the tobacco at the time of inspection and certification. If, at any time, it is found that a lot of tobacco does not comply with the specifications of the grade previously assigned, it shall not thereafter be represented as such grade.

§ 29.6093 Rule 7.

Any lot of tobacco which meets the specifications of two grades shall be placed in the higher grade. Any lot of tobacco on the marginal line between two grades shall be placed in the lower grade.

§ 29.6094 Rule 8.

A lot of tobacco meets the specifications of a grade when it is not lower in any degree of any element of quality than the minimum specifications of such grade.

§ 29.6095 Rule 9.

In determining the grade of a lot of tobacco, the lot as a whole shall be considered. Minor irregularities which do not affect over one percent of the tobacco shall be overlooked.

§ 29.6096 Rule 10.

Interpretations, the use of specifications, and the meaning of terms shall be in accordance with determinations or clarifications made by the Chief of the Standardization Branch and approved by the Director of the Tobacco Division, Agricultural Marketing Service.

§ 29.6097 Rule 11.

The use of any grade may be restricted by the Director during any marketing season when it is found that the grade is not needed or appears in insufficient volume to justify its use.

§ 29.6098 Rule 12.

Uniformity shall be expressed in percentages. These percentages shall govern the portion of a lot which must meet each specification of the grade; the remaining portion must be related. Grade specifications state the minimum acceptable degree of each element of quality. Specified percentages of uniformity shall not affect limitations established by other rules.

§ 29.6099 Rule 13.

Injury tolerance shall be expressed in percentages. The appraisal of injury shall be based upon the percentage of affected leaf surface or the degree of injury, and consideration shall be given to the kinds of injury normal to the group or grade.

§ 29.6100 Rule 14.

Stem rot shall not exceed 40 percent of the specified injury tolerance for any grade.

§ 29.6101 Rule 15.

In grade specifications the tolerance of crude shall apply to the entire leaf surface of the lot.

§ 29.6102 Rule 16.

In grade specifications frozen shall be treated as a separate kind of injury and the tolerance shall apply to the entire leaf surface of the lot.

§ 29.6103 Rule 17.

Tobacco shall be designated as No Grade, using the grademark ''No—G,'' when it is damaged, dirty, nested, offtype, semicured, wet, improperly packed, contains foreign matter, or has an odor foreign to the type.

§ 29.6104 Rule 18.

Burn shall be determined as the average burning time of leaves selected at random from the sample. A minimum of 10 leaves shall be selected as representative regardless of the number of bundles or bales in the lot. All burn tests shall be made in the bindercutting area on the same side of the leaf. The leaf shall be punctured to permit quick ignition when placed over a candle, alcohol lamp, or electrical-lighting device. Good burn shall average 6 seconds or longer; fair burn, 3 to 5 seconds; and poor burn, under 3 seconds. B1 and B2 shall require good burn and B3, fair burn.

Grades

§ 29.6126 Binder (B Group).

Tobacco of this group is of cigar-binder quality from which trash and trashy Farm Fillers have been removed.

U.S. grades	Grade names, minimum specifications, and tolerances
B1	Fine Quality Binder. Thin, ripe, open, elastic, strong, spready, and 19 inches or over in length. Uniformity, 90 percent; injury tolerance, 10 percent.
B2	Fair Quality Binder. Medium body, ripe, open, semielastic, strong, normal width, and 19 inches or over in length. Uniformity, 80 percent; injury tolerance, 20 percent.
B3	Low Quality Binder. Medium, ripe, firm, semielastic, normal strength and width, and 17 inches or over in length. Uniformity, 70 percent; injury tolerance, 30 percent.

§ 29.6127 Stripper (C Group).

This group consists of tobacco from which the trash and trashy Farm Fillers have been removed but does not meet the specifications of the Binder group.

U.S. grades	Grade names, minimum specifications, and tolerances
C1	Fine Quality Stripper. Heavy, ripe, firm, semielastic, normal strength and width, and 16 inches or over in length. Uniformity, 90 percent; injury tolerance, 10 percent.
C2	Fair Quality Stripper. Heavy, mature, close, inelastic, normal strength, narrow, and 16 inches or over in length. Uniformity, 80 percent. Tolerances: 5 percent crude, 5 percent frozen, and 20 percent injury.
C3	Low Quality Stripper. Heavy, immature, close, inelastic, weak, and narrow. Uniformity, 70 percent. Tolerances: 10 percent crude, 10 percent frozen, and 30 percent injury.

§ 29.6128 Straight Stripped (X Group).

This group consists of unsorted tobacco from which the trash has been removed.

U.S. grades	Grade names, minimum specifications, and tolerances
X1	Fine Quality Straight Stripped. Heavy, ripe, firm, semielastic, normal strength and width, and 16 inches or over in length. Uniformity, 85 percent; injury tolerance, 15 percent.
X2	Fair Quality Straight Stripped. Heavy mature, close, inelastic, normal strength, narrow, and 16 inches or over in length. Uniformity, 75 percent. Tolerances: 5 percent crude, 5 percent frozen, and 25 percent injury.
X3	Low Quality Straight Stripped. Heavy, immature, close, inelastic, weak, and narrow. Uniformity, 60 percent. Tolerances: 10 percent crude, 10 percent frozen, and 40 percent injury.

§ 29.6129 Farm Filler (Y Group).

This group consists of tobacco from the lower portion of the stalk and may include throw out leaves from the Binder and Stripper groups.

U.S. grades	Grade names, minimum specifications, and tolerances
Y1	Fine Quality Farm Filler. Thin, ripe, open, semielastic, normal strength and width, and 12 inches or over in length. Uniformity, 85 percent; injury tolerance, 15 percent.
Y2	Fair Quality Farm Filler. Thin, ripe, firm, inelastic, normal strength, and narrow. Uniformity, 75 percent. Tolerances: 5 percent crude, 5 percent frozen, and 25 percent injury.
Y3	Low Quality Farm Filler. Thin, mature, close, inelastic, weak, and narrow. Uniformity, 60 percent. Tolerances: 10 percent crude, 10 percent frozen, and 40 percent injury.

§ 29.6130 Nondescript (N Group).

Tobacco which does not meet the minimum specifications or exceeds the tolerance of the lowest grade of any other group.

U.S. grades	Grade names, minimum specifications, and tolerances
N1	First Quality Nondescript. Tolerances: 20 percent crude, 20 percent frozen, and 60 percent injury.
N2	Second Quality Nondescript. Over 20 percent crude, over 20 percent frozen, or over 60 percent injury.

§ 29.6131 Scrap (S Group).

A byproduct of unstemmed and stemmed tobacco. Scrap accumulates from handling tobacco in farm buildings, warehouses, packing and conditioning plants, and stemmeries.

U.S. grades	Grade names and specifications
S	Loose, tangled, whole, or broken unstemmed leaves, or the web portion of tobacco leaves reduced to scrap by any process.

Summary of Standard Grades

§ 29.6155 Summary of standard grades.

Three grades of binder	Three grades of stripper
B1	C1
B2	C2
B3	C3

Three grades of straight stripped	Three grades of farm filler
X1	Y1
X2	Y2
X3	Y3

Two grades of nondescript	One grades of scrap
N1	S
N2	

Tobacco not covered by standard grades is designated as ''No-G.''

Key to Standard Grademarks

§ 29.6161 Key to standard grademarks.

Groups	Qualities
B—Binder	1—Fine.
C—Stripper	2—Fair.
X—Straight Stripped	3—Low.
Y—Farm Filler	
N—Nondescript	
S—Scrap	

3. Part 31, consisting of §§ 31.400 through 31.402 is added to read as follows:

PART 31—PURCHASE OF WOOL AND WOOL TOP SAMPLES

Sec.
31.400 Samples for wool and wool top grades; method of obtaining.
31.401 Cost of samples for wool grades.
31.402 Cost of samples for wool top grades.

Authority: 7 U.S.C. 1621–1627.

§ 31.400 Samples for wool and wool top grades; method of obtaining.

Samples certified as representative of the official standards of the United States for grades of wool and wool top will be furnished as follows, subject to other conditions of this section, upon filing of an approved application and prepayment of costs thereof as fixed in §§ 31.401 and 31.402. The certification will be issued by the United States Department of Agriculture and will be signed by the Director of the Livestock Division or other duly authorized official.

(a) Samples representative of each of the standard grades of wool:

(1) *Complete set:* Grades 80's through 36's. Fourteen samples, each of approximately ⅛ pound grease wool, or

(2) *Individual sample:* Individual samples of approximately ⅛ pound of grease wool.

(b) Samples representative of each of the standard grades of wool top:

(1) *Complete set:* Grades 80's through 36's. Fourteen samples, each of approximately 3 ounces wool top, or

(2) *Individual sample:* Individual samples of approximately 3 ounces of wool top, representing a standard grade.

(c) Each application for standard samples of wool or wool top shall be upon an application form furnished or approved by the Agricultural Marketing Service, shall be signed by the applicant, and shall be accompanied by certified check, draft, post office money order, or express money order, payable to the ''Agricultural Marketing Service,'' in an amount to cover the cost of the samples requested, and shall incorporate the following agreement:

(1) That no samples representative of the official wool or wool top standards shall be considered or used as representing such standards after cancellation in accordance with this section.

(2) That the said standard samples shall be subject to inspection by the Secretary or by any duly authorized officer or agent of the Department of Agriculture during usual business hours of the person having custody of the samples.

(3) That the certificate covering any of the samples representative of the standards may be revoked and canceled by the Director of the Livestock Division if it is found upon such inspection that the said samples are not representative of the official standards.

Note to § 31.400: A sample consists of wool randomly selected from a bulk sample. The measured average and standard deviation of fiber diameter of the bulk sample are within the limits corresponding to the grade of the standard sample as set forth in the voluntary

U.S. grade standards. Copies of the voluntary U.S. grade standards can be obtained from Director, Livestock and Seed Division, Agricultural Marketing Service, U.S. Department of Agriculture, P.O. Box 96456, Washington, DC 20090–6456.

§ 31.401 Cost of samples for wool grades.

(a) *Complete set:* $22 each, delivered to any destination within the United States and $24 each, delivered to any destination outside the United States.

(b) *Individual sample:* $2 each, delivered to any destination within the United States and $2.50 each, delivered to any destination outside the United States.

§ 31.402 Cost of samples for wool top grades.

(a) *Complete set:* $42 each, delivered to any destination within the United States and $44 each, delivered to any destination outside the United States.

(b) *Individual sample:* $3 each, delivered to any destination within the United States and $3.50 each, delivered to any destination outside the United States.

4. Part 32, consisting of §§ 32.400 through 32.403 is added to read as follows:

PART 32—PURCHASE OF GREASE MOHAIR AND MOHAIR TOP SAMPLES

32.400 Samples of grease mohair grades; method of obtaining.
32.401 Cost of samples for grease mohair grades.
32.402 Samples of mohair top grades; method of obtaining.
32.403 Cost of samples for mohair top grades.

Authority: 7 U.S.C. 1621–1627.

§ 32.400 Samples of grease mohair grades; method of obtaining.

Samples certified as representative of the official standards of the United States for grades of grease mohair will be furnished as follows, subject to other conditions of this section, upon filing of an approved application and prepayment of the costs thereof as fixed in § 32.401. The certification will be issued by the U.S. Department of Agriculture and will be signed by the Director of the Livestock Division or other duly authorized official.

(a) Samples representative of each of the standard grades of grease mohair:

(1) *Complete set.* Ten certified samples of grease mohair, grades 40s through 18s.

(2) *Individual sample.* Individual certified samples of grease mohair.

(b) Each application for standard samples of grease mohair shall be upon an application form furnished or approved by the Consumer and Marketing Service, shall be signed by the applicant, and shall be accompanied by certified check, draft, post office money order, or express money order, payable to the ''Agricultural Marketing Service,'' in an amount to cover the cost of the samples requested, and shall incorporate the following agreement.

(1) That no samples representative of the official grease mohair standards shall be considered or used as representing such standards after cancellation in accordance with this section.

(2) That the said standard samples shall be subject to inspection by the Secretary or by any duly authorized officer or agent of the Department of Agriculture during usual business hours of the person having custody of the samples.

(3) That the certificate covering any of the samples representative of the standards may be revoked and canceled by the Director of the Livestock Division, if it is found upon such inspection that the said samples are not representative of the official standards.

Note to § 32.400: A certified sample consists of grease mohair randomly selected from a bulk sample. The measured average and standard deviation of fiber diameter of bulk sample were within the limits corresponding to the grade of the standard sample as set forth in the voluntary U.S. grade standards. Copies of the voluntary U.S. grade standards can be obtained from Director, Livestock and Seed Division, Agricultural Marketing Service, U.S. Department of Agriculture, P.O. Box 96456, Washington, DC 20090–6456.

§ 32.401 Cost of samples for grease mohair grades.

(a) *Complete set.* $22 each, delivered to any destination with the United States and $25 each, delivered to any destination outside the United States.

(b) *Individual sample.* $2.50 each, delivered to any destination within the United States, and $3 each, delivered to any destination outside the United States.

§ 32.402 Samples of mohair top grades; method of obtaining.

Samples certified as representative of the official standards of the United States of grades of mohair top will be furnished when available as follows, subject to other conditions for this section, upon filing of an approved application and prepayment of the cost thereof as fixed in § 32.403. The certification will be issued by the U.S. Department of Agriculture and will be signed by the Director of the Livestock Division or other official duly authorized by him.

(a) Samples representative of the official grades of mohair top:

(1) *Complete set.* Nine certified samples of mohair top, grades 40s through 20s.

(2) *Individual sample.* Individual certified samples of mohair top, grades 40s through 20s.

(b) Each application for standard samples of mohair top shall be upon an application form furnished or approved by the Agricultural Marketing Service, shall be signed by the applicant, and shall be accompanied by certified check, draft, postal money order, or express money order, payable to the ''Agricultural Marketing Service,'' in an amount to cover the cost of the samples requested and shall incorporate the following agreement:

(1) That no samples representative of the official mohair top standards shall be considered or used as representing such standards after cancellation in accordance with this section.

(2) That the said standard samples shall be subject to inspection by the Secretary or by any duly authorized officer or agent of the Department of Agriculture during usual business hours of the person having custody of the samples.

(3) That the certificate covering any of the samples representative of the standards may be revoked and canceled by the Director of the Livestock Division, if it is found upon such inspection that the said samples are not representative of the official standards.

§ 32.403 Cost of samples for mohair top grades.

(a) *Complete set.* Twenty-seven dollars each, delivered to any destination within the United States and $30 each, delivered to any destination outside the United States.

(b) *Individual sample.* Three dollars each, delivered to any destination within the United States, and $3.50 each, delivered to any destination outside the United States.

5. Part 36, consisting of §§ 36.1 through 36.3 is added to read as follows:

PART 36—PROCEDURES BY WHICH THE AGRICULTURAL MARKETING SERVICE DEVELOPS, REVISES, SUSPENDS, OR TERMINATES VOLUNTARY OFFICIAL GRADE STANDARDS

Sec.
36.1 General information.
36.2 Initiating action on grade standards.
36.3 Public notification of grade standards action.

Authority: 7 U.S.C. 1621–1627.

§ 36.1 General information.

The Agricultural Marketing Service (AMS or agency) of the U.S. Department

of Agriculture (USDA) facilitates the fair and efficient marketing of agricultural products by promulgating voluntary official grade standards for dairy, fresh and processed fruits and vegetables, livestock, meats and meat products, eggs, poultry and rabbit products, tobacco, wool, mohair, and other agricultural products. AMS standards provide a uniform language for describing the quality of various agricultural commodities in the marketplace. These standards may cover (but are not limited to) terms, classes, sizes (including quantities of packaged consumer agricultural commodities), dimensions, capacities, quality levels, performance criteria, inspection requirements, marking requirements, testing equipment, test procedures, and installation procedures.

(a) Grade standards are officially designated as U.S. Grade Standards and the AMS assigns each grade standard an appropriate identification number. AMS develops, revises, suspends, or terminates official grade standards under procedures that allows for input by interested parties.

(b) These procedures set forth the process by which AMS will develop, revise, suspend, or terminate the U.S. standards.

(c) Communications about AMS standards in general should be addressed to the Administrator, Attention: Functional Committee for Standards. Communications about specific standards (such as a request to develop or revise a standard) should be addressed to the Director of the appropriate Division (Dairy, Fruit and Vegetable, Livestock and Seed, Poultry, or Tobacco). All communications should include in the address: Agricultural Marketing Service, U.S. Department of Agriculture, P.O. Box 96456, Washington, D.C. 20090–6456.

§ 36.2 Initiating action on grade standards.

The Agency will develop, revise, suspend, or terminate grade standards if it determines that such action is in the public interest. Any standardization action should reflect the broad interest of individuals or an industry involved in manufacturing, producing, packaging, distributing, testing, consuming, or using the product; or the interest of a Federal, State, or local agency. Proposed actions should always be based on sound technical and marketing information and should include careful consideration of the factors that determine a commodity's quality and condition and that will allow trained personnel to determine objectively conformance or non-conformance.

(a) AMS encourages interested parties to participate in the review, development, and revision of grade standards. Interested parties include growers, producers, processors, shippers, distributors, consumers, individuals or groups, trade associations, companies, and State or Federal agencies. Such groups and individuals may at any time recommend that AMS develop, revise suspend, or terminate a grade standard. Requests for Agency action should be in writing, preferably accompanied by a draft of the suggested change.

(1) The Agency, in cooperation with interested parties, as applicable, will:

(i) Determine the need for new or revised standards;

(ii) Collect technical, marketing, or other appropriate data;

(iii) Conduct research regarding new or revised standards, as appropriate; and,

(iv) Draft the proposed standards;

(2) [Reserved]

(b) If the Agency determines that new standards are needed, existing standards need to be revised, or the suspension or termination of existing standards is justified, it will undertake the action, with input from all interested parties.

§ 36.3 Public notification of grade standards action.

After developing a standardization proposal, the Agency will publish a notice in the **Federal Register** describing new or changes to existing standards or to suspend or terminate existing standards. AMS will simultaneously issue a news release about these actions. AMS will also distribute copies of the full text of the proposals to anyone requesting a copy or to anyone the Agency believes may be interested, including other Federal, State, or local government agencies, and on the Internet. For other than minor editorial or technical changes, the notice will provide at least 60 days for interested parties to submit comments to the Agency.

(a) All comments received within the comment period will be part of the public record maintained by the Agency, will be available to the public for review, and will be considered by the Agency before final action is taken on the proposal.

(1) Based on the comments received, the Agency's knowledge of standards, grading, marketing, and other technical factors, and any other relevant information AMS will decide whether the proposed actions should be implemented.

(2) If AMS concludes that the actions as proposed or with minor modifications should be adopted, AMS will publish a description of the changes or actions in a **Federal Register** notice. The Agency, through the appropriate AMS Divisions, will make the grade standards and related information available in printed form and electronic media.

(3) If the Agency determines that proposed changes are not warranted, or otherwise are not in the public interest, the Agency will either publish in the **Federal Register** a notice withdrawing the proposal, or will revise the proposal and again seek public input.

(b) [Reserved]

PART 52—PROCESSED FRUITS AND VEGETABLES, PROCESSED PRODUCTS THEREOF, AND CERTAIN OTHER PROCESSED FOOD PRODUCTS [1]

6. The authority citation for part 52 continues to read as follows:

Authority: 7 U.S.C. 1621–1627.

7. In part 52, Subpart—United States Standards for Grades of Frozen Cauliflower (§§ 52.721 through 52.729), Subpart—United States Standards for Grades of Frozen Okra (§§ 52.1511 through 52.1520), Subpart—United States Standards for Grades of Frozen Field Peas and Frozen Black-eye Peas (§§ 52.1661 through 52.1674), Subpart—United States Standards for Grades of Frozen Green Beans and Frozen Wax Beans (§§ 52.2321 through 52.2330) are removed.

PART 53—LIVESTOCK (GRADING, CERTIFICATION, AND STANDARDS)

8. The authority citation for part 53 continues to read as follows:

Authority: 7 U.S.C. 1621–1627.

Subpart B—[Removed and Reserved]

9. In part 53, Subpart B—Standards, is removed and reserved.

PART 54—MEATS, PREPARED MEATS, AND MEAT PRODUCTS (GRADING, CERTIFICATION, AND STANDARDS)

10. The authority citation for part 54 continues to read as follows:

Authority: 7 U.S.C. 1621–1627.

Subpart B—[Removed and Reserved]

11. In part 54, Subpart B—Standards is removed and reserved.

[1] Among such other processed food products are the following: Honey; molasses, except for stockfeed; nuts and nut products, except oil; sugar (cane, beet, and maple); sirups (blended), sirups, except from grain; tea; cocoa; coffee; spices; condiments.

PART 58—GRADING AND INSPECTION, GENERAL SPECIFICATIONS FOR APPROVED PLANTS AND STANDARDS FOR GRADES OF DAIRY PRODUCTS

12. The authority citation for part 58 continues to read as follows:

Authority: 7 U.S.C. 1621–1627.

Subparts I, L, U—[Removed and Reserved]

13. In part 58, Subpart I—U.S. Standards for Grades of Monterey (Monterey Jack) Cheese, subpart L—United States Standards for Grades of Nonfat Dry Milk (Spray Process), and subpart U—United States Standards for Instant Nonfat Dry Milk are removed and reserved.

Dated: July 31, 1997.

Lon Hatamiya,

Administrator, Agricultural Marketing Service.

[FR Doc. 97–21045 Filed 8–12–97; 8:45 am]

BILLING CODE 3410–02–P

federal register

Wednesday
August 13, 1997

Part III

Department of the Interior

Fish and Wildlife Service

50 CFR Part 20

Migratory Bird Hunting; Temporary Conditional Approval of Tungsten-Iron Shot as Nontoxic for the 1996–98 Season; Final Rule

DEPARTMENT OF INTERIOR

Fish and Wildlife Service

50 CFR Part 20

RIN 1018-AE09

Migratory Bird Hunting; Temporary Conditional Approval of Tungsten-Iron Shot as Nontoxic for the 1997–98 Season

AGENCY: Fish and Wildlife Service, Interior.

ACTION: Final rule.

SUMMARY: The U.S. Fish and Wildlife Service (Service) amends Section 20.21(j) and temporarily approves tungsten-iron shot as nontoxic for the 1997–98 migratory bird hunting season. The toxicological report and extensive literature search and analysis suggests that tungsten and tungsten-iron are nontoxic under conditions for the proposed shot configuration. Analysis of the toxicity study reveals no adverse effects over a 30-day period when dosing mallards with 8 BB-size tungsten-iron shot.

EFFECTIVE DATE: September 1, 1997.

FOR FURTHER INFORMATION CONTACT: Paul R. Schmidt, Chief, or Carol Anderson, Wildlife Biologist, Office of Migratory Bird Management (MBMO), (703) 358–1714.

SUPPLEMENTARY INFORMATION: Since the mid-1970s, the Service has sought to identify shot that, when spent, does not pose a significant toxic hazard to migratory birds and other wildlife. Currently, steel shot and bismuth-tin shot are approved by the Service as nontoxic. The Service believes approval for other suitable candidate shot materials as nontoxic is feasible. Compliance with the use of nontoxic shot is increasing over the last few years. The Service believes that this level of compliance will continue to increase with the availability and approval of other nontoxic shot types. The Service is eager to consider these other materials for approval as nontoxic shot.

Federal Cartridge Company's (Anoka, MN) candidate shot is made from sintering tungsten and iron, which forms a two-phase alloy. Shot made from this material has a density of approximately 10.3 gm/cc, or 94 percent of the density of lead. The tested shot will contain nominally 55 percent tungsten and 45 percent iron, by weight; whereas, the marketed shot will contain nominally 40 percent tungsten and 60 percent iron, by weight. The pellet will have sufficient iron to attract a magnet. The Service, in consultation with the U.S. Geological Service, Biological Resources Division, considers the higher tungsten ratio of the tested shot more potentially toxic and that the lower ratio of the marketed shot poses significantly less risk.

Federal's application includes a description of the new tungsten-iron shot, a toxicological report, and results of a 30-day dosing study (Test 1) to assess the toxicity of this shot in game-farm mallards as outlined in 50 CFR 20.134(c)(2). The toxicological report incorporates toxicity information (a synopsis of acute and chronic toxicity data for birds, acute effects on mammals, potential for environmental concern, toxicity to aquatic and terrestrial invertebrates, amphibians and reptiles), and information on environmental fate and transport (shot alteration, environmental half-life, and environmental concentration). The toxicity study is a 30-day dosing test to determine if the candidate shot poses any deleterious effects to game-farm mallards.

Toxicity Information: There is considerable difference in the toxicity of soluble and insoluble compounds of tungsten and iron. Elemental tungsten and iron are virtually insoluble and, therefore, are expected to be nontoxic. After completion of the literature review, there appears to be no basis for concern of toxicity to wildlife for the candidate shot material (metallic tungsten and iron) via ingestion by fish, birds, or mammals (Bursian et al. 1996; Gigiena 1983; Patty 1981; Industrial Medicine 1946; Karantassis 1924).

Environmental Fate and Transport: Tungsten is insoluble in water and, therefore, not mobile in hypergenic environments. Tungsten is very stable with acids and does not easily complex. Preferential uptake by plants in acid soil suggests uptake of tungsten in the anionic form associated with tungsten minerals rather than elemental tungsten (Kabata-Peddias 1984).

Environmental Concentration: The expected environmental concentration (EEC) is defined as the concentration of a chemical in a particular environmental compartment that is based on an estimate or modeling simulation of use, disposal, transport, and fate of a chemical. Calculation of the EEC for a terrestrial ecosystem is on 69,000 shot per hectare (Pain 1990), assuming complete erosion of material in 5 cm of soil. The EEC for tungsten in soil is 32.9 mg/kg of shot material left in the soil after the initial degradation of the shot. This calculated amount is based on shot composed of 62.9 percent tungsten-iron alloy, 11.87 percent tungsten, and 25.31 percent iron. Adverse effects on biota are not expected to occur for shot components, given the Hazard Quotients (HQs).

Calculation of the expected environmental concentration (EEC) for an aquatic ecosystem assumes complete erosion of the shot in one cubic foot of water. The EEC in water for tungsten was 10.5 mg/L left in the water after the initial degredation of the shot. This calculated amount is based on shot composed of 62.9 percent tungsten-iron alloy, 11.87 percent tungsten, and 25.31 percent iron. Given these HQs, adverse effects on biota are not expected to occur for shot components.

An extensive literature search and review provides information on the toxicity of elemental tungsten to waterfowl and other birds. Ringelman et al.'s (1993) investigation of the effects of ingested tungsten-bismuth-tin (TBT) shot on captive mallards found no acute toxicity. Orally dosing 28-week old game-farm mallards with 12 to 17 pellets (1.03g) of TBT shot revealed no evidence of intoxication over a period of 32 days. No birds died during the trial. Gross lesions were not observed during the postmortem examination. Histopathological examination did not reveal any evidence of toxicity or tissue damage. Tungsten was not detectable in kidney or liver samples. The authors concluded that TBT shot presents virtually no potential for acute intoxication in mallards.

A study by Kraabel et al. (1996) assessed the effects of embedded tungsten-bismuth-tin shot on mallards. The authors' conclusion was that TBT is not acutely toxic when implanted in mallard muscle tissue. Inflammatory reactions to TBT shot were localized, and had no detectable systemic effects on mallard health.

Nell (1981) fed laying hens 0.4 or 1g/kg tungsten in a commercial mash for five months to assess the reproductive performance. Weekly egg production was normal and hatchability of fertile eggs was not affected.

Large doses of tungsten given to chickens either through injection or by feeding saw an increase in tissue concentration of tungsten and a decreased tissue concentration of molybdenum (Nell 1981). The loss rate of tungsten from the liver occurred in an exponential manner with a half-life of 27 hours. The alterations in molybdenum metabolism seem to identify with tungsten and not of molybdenum deficiency. Death due to tungsten occurred when tissue concentrations were increased to 25μg/g liver. At this concentration, the

activity of xanthine dehydrogenase was zero.

In Federal's dosing study, eight male and 8 female adult mallards were given 8 #4 steel shot, 8 #4 lead shot, or 8 BB's of tungsten-iron and observed over a 30-day period. An additional 8 males and 8 females were given no shot. All tungsten-iron birds survived the test with a slight increase in body weight. There were no changes in hematocrit, hemoglobin concentration, and ALAD activity, as well as 25 plasma chemistry parameters. Five of the 16 tungsten-iron birds had a mild hepatocellular biliary stasis, but the authors felt this was not remarkable. No other histopathological lesions were found. There was some absorption of tungsten in the femur, kidney, and liver, with some effect on the bile. In general,however, no adverse effects were seen when mallards were given 8 BB-size tungsten-iron shot and monitored over a 30-day period. Fifty percent of the lead-dosed birds (5 males and 3 females) died during the 30-day test while there were no mortalities in the other groups. Lead-dosed birds were the only ones to display green excreta, lethargy, and ataxia. Alteration of body weights was not significant in any of the treatments, although lead-dosed birds which died during the trial lost an average of 30 percent of their body weight. Hematocrit, hemoglobin concentrations, and ALAD activity were significantly depressed at day 15 in the lead-dose females, while lead-dose males had significantly depressed hematocrit and hemoglobin concentration in comparison to the other three groups. There were no significant differences in these whole-blood parameters at day 30.

As a result of the toxicological report and toxicity test the Service concludes that tungsten-iron shot, nominally 40–55 percent tungsten and 60–45 percent iron, by weight with <1 percent residual lead, does not impose significant danger to migratory birds and other wildlife and their habitats. The Service has some concern that the absorption of tungsten into the femur, kidney, and liver may have some potential effect on the spectacled eider (*Somateria fischeri*), a species already subject to adverse weather, predation, and lead poisoning when waterfowl are harvested in its Yukon-Kuskokwim Delta (Y-K Delta) habitat in Alaska. Until the results of reproductive/chronic toxicity tests, which includes the assessment of reproduction, fertility rates, and egg hatchability (egg weight, shell thickness, and content analysis) have been completed and the Service has reviewed the results, tungsten-iron shot cannot be conditionally approved for the Y-K Delta habitat in Alaska.

The first condition of final unconditional approval is the concurrent running of an adverse condition test (Test 2) and a reproductive/chronic toxicity test (Test 3) on game-farm mallards as outlined in 50 CFR 20.134 (c)(2) and in consultation with the Service's Office of Migratory Bird Management and the U.S. Geological Survey's Division of Biological Resources. This study includes assessment of reproduction, fertility rates, and egg hatchability (egg weight, shell thickness, and content analysis). The test requires the applicant to demonstrate that tungsten-iron shot is nontoxic to waterfowl and their offspring.

The second condition of final unconditional approval is testing for residual lead levels. In the **Federal Register** of August 18, 1995 (60 FR 43314), the Service indicated it would establish a maximum level for residual lead. The Service, in consultation with the USGS—Division of Biological Resources, determined the maximum environmentally acceptable level of lead in any nontoxic shot is trace amounts or <1 percent and is incorporating this requirement into this rule and will incorporate it into any subsequent final rule that may be promulgated. Federal documented that the tungsten-iron shot had no residual lead levels equal to or exceeding 1 percent.

The third condition of final unconditional approval involves enforcement. In the August 18, 1995, **Federal Register** (60 FR 43314), the Service indicated that final unconditional approval of any nontoxic shot would be contingent upon the development and availability of a noninvasive field testing device. Several noninvasive field testing devices are under development to separate tungsten-iron shot from lead shot. Furthermore, tungsten-iron shot can be drawn to a magnet as a simple field detection method.

This rule amends 50 CFR 20.21(j) by temporarily approving tungsten-iron shot as nontoxic for the 1997–98 migratory bird hunting season throughout the United States except for the Y-K Delta habitat in Alaska. It is based on the original request made to the Service by Federal Cartridge Company on August 20, 1996, the toxicological report, and acute toxicity study. Results of the toxicological report and 30-day toxicity test undertaken for Federal Cartridge Company indicate the apparent absence of any deleterious effects of tungsten-iron shot when ingested by captive-reared mallards or to the ecosystem.

Public Comments and Responses

The January 31, 1997, proposed rule published in the **Federal Register** (62 FR 4877) invited public comments from interested parties. The closing date for receipt of all comments was April 1, 1997. During this 60-day comment period, the Service received five comment letters. Of these comment letters, three were from individuals and two from industry organizations. Individuals expressed support for the temporary approval of tungsten-iron shot. Individuals ''. . . would love the opportunity to try the new shot'' and believed that ''. . . any nontoxic alternative that approaches the effectiveness of lead should be explored.''

The Bismuth Cartridge Company (Bismuth) is concerned that the Service should ensure that all applicants for non-toxic shot approval are subject to comparable requirements and conditions. The Service does ensure that any candidate nontoxic material will comply with current regulations set forth in 50 CFR 20.134 for nontoxic shot approval. Applications for approval must include a description of the candidate shot, a toxicological report on the candidate shot, and a 30-day dosing test with mallards. As new information becomes available, applications may be revised to include this information, which will assist the Service in evaluating the candidate material.

Furthermore, Bismuth stated that ''...no testing of reproductive tissues (i.e., gonads) was conducted in association with Federal's 30-day toxicity testing.'' The current regulations do not require that gonads be chemically analyzed for metals in Test 1. The Service notified Federal that this would not be a requirement during the Test 1 phase because Federal demonstrated that there was existing data on the effects of tungsten and iron on the reproductive tissues in the scientific literature. Once the shot is conditionally approved, guidance for further testing is provided to the applicant. Following satisfactory completion of Tests 1, 2, and 3, or their equivalent, and publication of a summary of these results in the **Federal Register** for public comment, the candidate material is concomitantly proposed for inclusion in 50 CFR 20.21(j).

Bismuth is also concerned that Federal is not being held to as strict a requirement as they were during their application process for approval of bismuth-tin. Bismuth states that they

conducted additional assays to demonstrate that bismuth-tin shot's residual lead levels were at levels well below the <1 percent standard. Their concern lies in the fact that the proposed rule does not state that the applicant will need to provide data demonstrating the absence of any carcinogenic materials in its shot. The Service required the applicant to demonstrate that the candidate shot contains no significant trace levels of lead or other toxic or carcinogenic materials. The Service indicated in the August 18, 1995, **Federal Register**, that a maximum level of residual lead would be established. The Service, in consultation with the USGS—Division of Biological Resources (formerly the National Biological Service), determined the maximum environmentally acceptable level of lead in bismuth-tin shot is trace amounts or <1 percent. This requirement was incorporated in the final rule approving bismuth-tin shot. This same requirement applies to tungsten-iron shot.

Winchester states ''the shot sample submitted for the acute toxicity portion of the required testing was significantly different from the shot that is being marketed and requested for approval.'' Winchester analyzed samples of shot they obtained at retail and found that the tungsten-iron alloy phases varied. ''Since the application indicates that the shot is heated to *thermal* equilibrium and not *chemical* equilibrium, this is not surprising.'' Furthermore, two different phases of intermetallic compound (Fe_2W and FeW) and pure tungsten were also present in the marketed shot. The Service requested additional information from Federal regarding the details of the manufacturing process of the tungsten-iron shot. Federal states the tungsten-iron shot is sintered at 1520°C under a tight time and temperature tolerance. The Fe_7W_6 compound is formed at thermal equilibrium, which takes into account all energy factors, unlike chemical equilibrium. The shot is then quickly cooled to ambient temperatures much like quenching steel. High cooling rates of the tungsten-iron shot, in part due to the small size of the tungsten-iron shot, preclude the formation of compounds other than Fe_7W_6. The Fe_7W_6 that forms at the 1520°C sintering temperature is cooled too quickly to change to other compounds. Transformation to other compounds is sluggish; x-ray diffraction analysis confirms the absence of the other intermetallic compounds. The Toxicity Test 1, and subsequent Toxicity Tests 2 and 3, will be conducted using tungsten-iron shot representing a ''worst-case'' scenario, i.e., the shot being tested has a higher concentration of the Fe_7W_6 compound than the shot Federal plans to manufacture for public use.

Winchester also raised their concern about the fact that the ''soft'' matrix of this tungsten-iron shot is as hard or harder than current gun barrels which have been designed for steel shot. The Service agrees that this should be a concern for the consumer. Federal recognized that the hardness of the tungsten-iron shot would require a new wad to protect shotgun bores from scouring. Federal designed a wad made of high-density polyethylene which features three inner petals overlapped by three outer petals so there are no exposed wad slits to allow the shot to contact the barrel or chokes. The wad's outer petals are designed to shear back or off once it exits the barrel. Additionally, tungsten-iron shot is not recommended for use with older shotguns or for fine double guns not designed to handle steel. Federal advises that these tungsten loads should only be shot through barrels and chokes approved for use with steel shot.

Furthermore, Winchester is concerned that the payloads and/or pellet counts in the marketed shot have generally not been found to be effective, efficient harvesters of game at anything but very modest ranges. The primary shortcoming is insufficient pattern density to ensure the necessary number of pellet strikes for consistent, clean bagging of game. It is reasonable to expect the possibility of a high crippling rate for either of these very low pellet count loads. Previous uses of low pellet count, relatively high energy pellets have generally not yielded satisfactory results. Federal recognized that tungsten-iron shot has different ballistic properties than that of steel and bismuth-tin shot. Consequently, they conducted ballistic tests using ballistic software modeling and test-firing the tungsten shot. Their research indicated that a relatively light payload with a high velocity was the best alternative. Tests show that the new loads shot tight patterns like steel; offered ballistic advantages of high velocity; had better downrange energy than steel, bismuth, or lead; and produced better penetration than the other pellet materials. The Service expects that crippling rates may increase slightly with the advent of any new nontoxic shot; however, continued education and training of waterfowl hunters will help keep crippling loss to a minimum. The effectiveness of any shot is a function of the shooter's ability to place the pellets on the bird, the pellet's energy at point-of-contact, and the pellet's ability to penetrate. Hunters should test different loads with their guns before hunting with any new shot so that adjustments can be made to their technique in order to reduce crippling losses. Initial field testing in Canada has shown that the tungsten-iron shot performed exceptionally well.

References

A list of references is available and will be provided upon request.

NEPA Consideration

In compliance with the requirements of section 102(2)(C) of the National Environmental Policy Act of 1969 (NEPA) (42 U.S.C. 4332(C)), and the Council on Environmental Quality's regulation for implementing NEPA (40 CFR 1500–1508), the Service prepared an Environmental Assessment (EA) in December, 1996. This EA is available to the public at the Office of Migratory Bird Management, U.S. Fish and Wildlife Service, ms 634—ARLSQ, 1849 C Street NW., Washington D.C. 20240. Based on review and evaluation of the information in the EA, the Service determined the action to amend 50 CFR 20.21(j) to extend temporary conditional approval of tungsten-iron shot as nontoxic for 1997–98 and 1998–99 migratory bird hunting seasons would not be a major Federal action that would significantly affect the quality of the human environment.

Endangered Species Act Considerations

Section 7 of the Endangered Species Act (ESA) of 1972, as amended (16 U.S.C. 1531 *et seq.*), provides that, ''The Secretary shall review other programs administered by him and utilize such programs in furtherance of the purposes of this Act'' (and) shall ''insure that any action authorized, funded or carried out ... is not likely to jeopardize the continued existence of any endangered species or threatened species or result in the destruction or adverse modification of (critical) habitat ...'' Pursuant to section 7 of the ESA, MBMO sought review and concurrence that this action ≥is not likely to adversely affect≥ threatened, endangered, proposed, and category 1 species. Based on review and evaluation of the toxicity testing and available information, the Service determined that no adverse impact on endangered and threatened species would result from the proposed action. The results of this review may be inspected by the public in, and will be available to the public from, the Office of Migratory Bird Management, U.S. Fish and Wildlife Service, ms 634—

ARLSQ, 1849 C Street NW, Washington D.C. 20240.

Regulatory Flexibility Act, Executive Order 12866, and the Paperwork Reduction Act

The Regulatory Flexibility Act of 1980 (5 U.S.C. 601 *et seq.*) requires the preparation of flexibility analyses for rules that will have a significant effect on a substantial number of small entities, which includes small businesses, organizations or governmental jurisdictions. The economic impacts of annual hunting on small business entities were analyzed in detail and a Small Entity Flexibility Analysis (Analysis), was issued by the Service in 1995. The Analysis documented the significant beneficial economic effect on a substantial number of small entities. The primary source of information about hunter expenditures for migratory game bird hunting is the National Hunting and Fishing Survey, which is conducted at 5-year intervals. The Analysis utilized the 1991 National Hunting and Fishing Survey and the U.S. Department of Commerce's County Business Patterns from which it was estimated that migratory bird hunters would spend between $10 and $59 million at small businesses in 1995. The approval of tungsten-iron as an alternative shot to steel and bismuth-tin will have a minor positive impact on small businesses by allowing them to sell a third nontoxic shot to the hunting public. However, the overall effect to hunting expenditures in general would be minor. Therefore, the Service determined this rule will have no effect on small entities since the approved shot merely will supplement nontoxic shot already in commerce and available throughout the retail and wholesale distribution systems. The Service anticipates no dislocation or other local effects, with regard to hunters and others. This rule was not subject to Office of Management and Budget (OMB) review under Executive Order 12866. The Service has examined this regulation under the Paperwork Reduction Act of 1995 and found it to contain no information collection requirements.

Unfunded Mandates Reform

The Service has determined and certifies pursuant to the Unfunded Mandates Act, 2 U.S.C. 1502 *et seq.*, that this rulemaking will not impose a cost of $100 million or more in any given year on local or State government or private entities.

Civil Justice Reform—Executive Order 12988

The Service, in promulgating this rule, determines that these regulations meet the applicable standards provided in Sections 3(a) and 3(b)(2) of Executive Order 12988.

Authorship

The primary author of this final rule is Carol Anderson, Office of Migratory Bird Management.

List of Subjects in 50 CFR Part 20

Exports, Hunting, Imports, Reporting and recordkeeping requirements, Transportation, Wildlife.

Accordingly, Part 20, Subchapter B, Chapter 1 of Title 50 of the Code of Federal Regulations is amended as follows:

PART 20—[AMENDED]

1. The authority citation for Part 20 continues to read as follows:

Authority: 16 U.S.C. 703–712 and 16 U.S.C. 742 a—j.

2. Section 20.21 is amended by revising paragraph (j), introductory text, and adding paragraph (j)(2) to read as follows:

§ 20.21 Hunting methods.

* * * * *

(j) While possessing shot (either in shotshells or as loose shot for muzzleloading) other than steel shot, or bismuth-tin (97 parts bismuth: 3 parts tin with <1 percent residual lead) shot, or tungsten-iron (nominally 40 parts tungsten: 60 parts iron with <1 percent residual lead) shot or such shot approved as nontoxic by the Director pursuant to procedures set forth in 20.134, provided that:

(1) * * *

(2) Tungsten-iron shot (nominally 40 parts tungsten: 60 parts iron with <1 percent residual lead) is legal as nontoxic shot for the 1997–98 migratory bird hunting season, except for the Yukon-Kuskokwim Delta habitat in Alaska.

Dated: August 7, 1997.

Donald J. Barry,

Acting Assistant Secretary for Fish and Wildlife and Parks.

[FR Doc. 97–21448 Filed 8–12–97; 8:45 am]

BILLING CODE 4310–55–F

federal register

Wednesday
August 13, 1997

Part IV

The President

Executive Order 13058—Protecting Federal Employees and the Public From Exposure to Tobacco Smoke in the Federal Workplace

Federal Register
Vol. 62, No. 156
Wednesday, August 13, 1997

Presidential Documents

Title 3—

The President

Executive Order 13058 of August 9, 1997

Protecting Federal Employees and the Public From Exposure to Tobacco Smoke in the Federal Workplace

By the authority vested in me as President by the Constitution and the laws of the United States of America and in order to protect Federal Government employees and members of the public from exposure to tobacco smoke in the Federal workplace, it is hereby ordered as follows:

Section 1. *Policy.* It is the policy of the executive branch to establish a smoke-free environment for Federal employees and members of the public visiting or using Federal facilities. The smoking of tobacco products is thus prohibited in all interior space owned, rented, or leased by the executive branch of the Federal Government, and in any outdoor areas under executive branch control in front of air intake ducts.

Sec. 2. *Exceptions.* The general policy established by this order is subject to the following exceptions: (a) The order does not apply in designated smoking areas that are enclosed and exhausted directly to the outside and away from air intake ducts, and are maintained under negative pressure (with respect to surrounding spaces) sufficient to contain tobacco smoke within the designated area. Agency officials shall not require workers to enter such areas during business hours while smoking is ongoing.

(b) The order does not extend to any residential accommodation for persons voluntarily or involuntarily residing, on a temporary or long-term basis, in a building owned, leased, or rented by the Federal Government.

(c) The order does not extend to those portions of federally owned buildings leased, rented, or otherwise provided in their entirety to nonfederal parties.

(d) The order does not extend to places of employment in the private sector or in other nonfederal governmental units that serve as the permanent or intermittent duty station of one or more Federal employees.

(e) The head of any agency may establish limited and narrow exceptions that are necessary to accomplish agency missions. Such exception shall be in writing, approved by the agency head, and to the fullest extent possible provide protection of nonsmokers from exposure to environmental tobacco smoke. Authority to establish such exceptions may not be delegated.

Sec. 3. *Other Locations.* The heads of agencies shall evaluate the need to restrict smoking at doorways and in courtyards under executive branch control in order to protect workers and visitors from environmental tobacco smoke, and may restrict smoking in these areas in light of this evaluation.

Sec. 4. *Smoking Cessation Programs.* The heads of agencies are encouraged to use existing authority to establish programs designed to help employees stop smoking.

Sec. 5. *Responsibility for Implementation.* The heads of agencies are responsible for implementing and ensuring compliance with the provisions of this order. ''Agency'' as used in this order means an Executive agency, as defined in 5 U.S.C. 105, and includes any employing unit or authority of the Federal Government, other than those of the legislative and judicial branches. Independent agencies are encouraged to comply with the provisions of this order.

Sec. 6. *Phase-In of Implementation.* Implementation of the policy set forth in this order shall be achieved no later than 1 year after the date of this

order. This 1 year phase-in period is designed to establish a fixed but reasonable time for implementing this policy. Agency heads are directed during this period to inform all employees and visitors to executive branch facilities about the requirements of this order, inform their employees of the health risks of exposure to environmental tobacco smoke, and undertake related activities as necessary.

Sec. 7. *Consistency with Other Laws.* The provisions of this order shall be implemented consistent with applicable law, including the Federal Service Labor-Management Relations Act (5 U.S.C. 7101 *et seq.*) and the National Labor Relations Act (29 U.S.C. 151 *et seq.*) Provisions of existing collective bargaining agreements shall be honored and agencies shall consult with employee labor representatives about the implementation of this order. Nothing herein shall be construed to impair or alter the powers and duties of Federal agencies established under law. Nothing herein shall be construed to replace any agency policy currently in effect, if such policy is legally established, in writing, and consistent with the terms of this order. Agencies shall review their current policy to confirm that agency policy comports with this order, and policy found not in compliance shall be revised to comply with the terms of this order.

Sec. 8. *Cause of Action.* This order does not create any right to administrative or judicial review, or any other right or benefit, substantive or procedural, enforceable by a party against the United States, its agencies or instrumentalities, its officers or employees, or any other person or affect in any way the liability of the executive branch under the Federal Tort Claims Act.

Sec. 9. *Construction.* Nothing in this order shall limit an agency head from establishing more protective policies on smoking in the Federal workplace for employees and members of the public visiting or using Federal facilities.

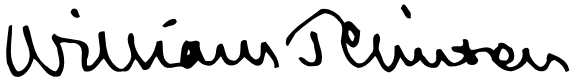

THE WHITE HOUSE,
August 9, 1997.

[FR Doc. 97–21607
Filed 8–12–97; 8:45 am]
Billing code 3195–01–P

Reader Aids

Federal Register

Vol. 62, No. 156

Wednesday, August 13, 1997

CUSTOMER SERVICE AND INFORMATION

Federal Register/Code of Federal Regulations

General Information, indexes and other finding aids	**202–523–5227**

Laws

For additional information	**523–5227**

Presidential Documents

Executive orders and proclamations	**523–5227**
The United States Government Manual	**523–5227**

Other Services

Electronic and on-line services (voice)	**523–4534**
Privacy Act Compilation	**523–3187**
TDD for the hearing impaired	**523–5229**

ELECTRONIC BULLETIN BOARD

Free **Electronic Bulletin Board** service for Public Law numbers, Federal Register finding aids, and list of documents on public inspection. **202–275–0920**

FAX-ON-DEMAND

You may access our Fax-On-Demand service. You only need a fax machine and there is no charge for the service except for long distance telephone charges the user may incur. The list of documents on public inspection and the daily Federal Register's table of contents are available using this service. The document numbers are 7050-Public Inspection list and 7051-Table of Contents list. The public inspection list will be updated immediately for documents filed on an emergency basis.

NOTE: YOU WILL ONLY GET A LISTING OF DOCUMENTS ON FILE AND NOT THE ACTUAL DOCUMENT. Documents on public inspection may be viewed and copied in our office located at 800 North Capitol Street, N.W., Suite 700. The Fax-On-Demand telephone number is: **301–713–6905**

FEDERAL REGISTER PAGES AND DATES, AUGUST

41249–41804 1
41805–42036 4
42037–42208 5
42209–42384 6
42385–42646 7
42647–42896 8
42897–43066 11
43067–43260 12
43269–43452 13

CFR PARTS AFFECTED DURING AUGUST

At the end of each month, the Office of the Federal Register publishes separately a List of CFR Sections Affected (LSA), which lists parts and sections affected by documents published since the revision date of each title.

3 CFR

Proclamations:
7016 42033
Executive Orders:
12722 (See Notice July 31, 1997) 41803
13057 41294
13058 43451
Administrative Orders:
Notice of July 31, 1997 41803

5 CFR

890 41486
1001 42897
4501 42897
Ch. LIV 43269
Proposed Rules:
213 42943
1650 42418

7 CFR

3 42857
29 43430
31 43430
32 43430
36 43430
52 43430
53 43430
54 43430
58 43430
278 ..... 42037, 42857
301 43269
400 42857
401 42647
457 42647
922 41805
923 41805
924 41805
993 41808
1126 41810
1220 41486
1493 42651
1767 ..... 42284, 43201
1901 42385
1951 ..... 41251, 42385
4284 42385
Proposed Rules:
56 52944
457 43236
1724 41883

9 CFR

1 43272
3 43272
77 42044
94 ..... 42664, 42899
304 42901
308 42901
310 42901
320 42901
327 42901
381 42901
416 42901
417 42901
Proposed Rules:
71 42703
92 42705

10 CFR

Proposed Rules:
20 42948
35 ..... 42219, 42707
55 42426

12 CFR

602 41253
960 41812
Proposed Rules:
3 42006
6 42006
204 42708
208 42006
225 42006
325 42006
565 42006
567 42006
701 41313
722 41313
723 41313

14 CFR

39 ..... 41254, 41255, 41257 41259, 41260, 41262, 41839, 42045, 42391, 42949, 42951, 42952, 43067
71 ..... 41265, 42901, 43069, 43275
97 ..... 41266, 41268, 41269
135 42364
241 43276
Proposed Rules:
39 ..... 41320, 41839, 42077, 42430, 42432, 42433, 42949, 42951, 42952, 43128
71 ..... 42954, 42955
107 41760
108 41730
139 41760

15 CFR

738 42047
740 42047
774 42047

16 CFR

305 42209
1033 42397

17 CFR

1 42398
232 41841
240 42664
270 42401

19 CFR

10 42209

Proposed Rules:

351 41322

20 CFR

340 41270
416 ....42410, 42411

Proposed Rules:

200 43295
404 42439
422 42439

21 CFR

101 43071
175 43075
177 42050
178 ....41271, 42050
520 42902
522 41272
730 43071

22 CFR

22 42665

Proposed Rules:

201 42712

23 CFR

Proposed Rules:

772 42903

24 CFR

Proposed Rules:

1000 43131
1003 43131
1005 43131

26 CFR

1 ....41272, 42051

Proposed Rules:

1 ....41322, 43295

29 CFR

1910 ....42018, 42666
2204 42957

30 CFR

210 42062
218 42062
227 43076
228 43076
229 43076
250 ....42667, 42669
925 41842
944 41845

Proposed Rules:

914 42713
936 42715

31 CFR

27 42212
356 43091
357 43283
Ch. V 41850
560 41851

Proposed Rules:

1 42443
27 42220

32 CFR

199 ....42904, 42905
247 42905
286 42916

Proposed Rules:

311 41323

33 CFR

100 ....42067, 42671, 43284
117 ....43096, 43097
165 ....41275, 42671, 42673, 42674, 42676, 42677, 43098, 43099

Proposed Rules:

117 43131
165 41324

36 CFR

Proposed Rules:

1190 43133
1191 43133

37 CFR

1 43100
2 43100

39 CFR

3 41853

Proposed Rules:

775 42958
777 42958
778 42958

40 CFR

3 43269
52 ....41275, 41277, 41280, 41853, 41856, 41865, 41867, 42068, 42216, 42412, 42916, 43100, 43103, 43104, 43109
55 41870
62 41872
63 42918
81 ....41280, 41867
90 42638
91 42638
148 43109
180 ....41283, 41286, 41874, 42678, 42684, 42921, 43284
271 43111
300 ....41292, 42414
721 42690

Proposed Rules:

52 ....41325, 41326, 41905, 41906, 42079, 42087, 42088, 42221, 43133, 43134, 43139, 43140
62 41906
81 ....41326, 41906, 42717
90 42645
91 42645
131 42160
141 42221
142 42221
281 ....41326, 42222
439 42720
721 ....42090, 42732, 43297

41 CFR

101–17 42070
301-8 42928

Proposed Rules:

101–16 42444

42 CFR

418 42860

43 CFR

10 41292

44 CFR

64 43291

45 CFR

74 41877

47 CFR

0 42928
2 ....41879, 43116
15 ....41879, 43116
32 43122
53 43122
54 41294
61 42217
69 41294
73 ....42416, 43123, 43293, 43294
97 43116

Proposed Rules:

1 42224
54 42457
63 42091
69 42457
73 ....43301, 43302

48 CFR

Ch. 7 42929
904 42072
909 42072
923 42072
926 42072
952 42072
970 42072

49 CFR

193 41311
544 41882
Chapter X 42075

Proposed Rules:

213 ....42733, 43201
234 42733
571 ....42226, 42469
572 42469
1155 42734

50 CFR

17 42692
20 43444
217 43124
227 43124
285 ....42416, 43126
300 43126
622 42417
648 43127
660 43294

Proposed Rules:

14 42091
17 ....41328, 42092, 42473
20 43042
23 42093
216 42737
229 43302
600 ....41907, 42093, 42474
622 42478
648 42737
679 43307

REMINDERS

The items in this list were editorially compiled as an aid to Federal Register users. Inclusion or exclusion from this list has no legal significance.

RULES GOING INTO EFFECT AUGUST 13, 1997

AGRICULTURE DEPARTMENT

Agricultural Marketing Service

Soybean promotion, research, and consumer information:

United Soybean Board; representation adjustments; published 7-14-97

COMMERCE DEPARTMENT

National Oceanic and Atmospheric Administration

Fishery conservation and management:

West Coast States and Western Pacific fisheries—

Western Pacific crustacean; correction; published 8-13-97

ENVIRONMENTAL PROTECTION AGENCY

Air quality implementation plans; approval and promulgation; various States:

Massachusetts; published 7-14-97

Conflict of interests; CFR part removed; published 8-13-97

Pesticides; tolerances in food, animal feeds, and raw agricultural commodities:

Propiconazole; published 8-13-97

TREASURY DEPARTMENT

Fiscal Service

Book-entry Treasury bonds, notes, and bills:

Securities in book-entry form held through financial intermediaries (TRADES) regulations—

Uniform Commercial Code Article 8 enactment by States; published 8-13-97

COMMENTS DUE NEXT WEEK

AGRICULTURE DEPARTMENT

Agricultural Marketing Service

Milk marketing orders:

Carolina et al.; comments due by 8-22-97; published 7-23-97

AGRICULTURE DEPARTMENT

Animal and Plant Health Inspection Service

Plant-related quarantine, domestic:

Mediterranean fruit fly; comments due by 8-19-97; published 6-20-97

AGRICULTURE DEPARTMENT

Federal Crop Insurance Corporation

Administrative regulations:

Insurance coverage by written agreement; procedures; comments due by 8-19-97; published 6-20-97

AGRICULTURE DEPARTMENT

Grain Inspection, Packers and Stockyards Administration

Fees:

Official inspection and weighing services; comments due by 8-18-97; published 7-18-97

COMMERCE DEPARTMENT

National Oceanic and Atmospheric Administration

Fishery conservation and management:

Atlantic swordfish; comments due by 8-21-97; published 7-25-97

Caribbean, Gulf, and South Atlantic fisheries—

Gulf of Mexico shrimp; comments due by 8-18-97; published 7-2-97

Carribean, Gulf, and South Atlantic fisheries—

Red snapper; comments due by 8-22-97; published 8-7-97

CORPORATION FOR NATIONAL AND COMMUNITY SERVICE

Official material or information production or disclosure; service of process; and removal of standards of conduct regulations; comments due by 8-18-97; published 7-17-97

ENVIRONMENTAL PROTECTION AGENCY

Air programs:

Ambient air quality standards, national—

Particulate matter; supplemental information availability; comments due by 8-18-97; published 7-18-97

Air quality implementation plans; approval and promulgation; various States:

Florida; comments due by 8-20-97; published 7-21-97

Illinois; comments due by 8-21-97; published 7-22-97

Indiana; comments due by 8-20-97; published 7-21-97

Minnesota; comments due by 8-21-97; published 7-22-97

Pennsylvania; comments due by 8-20-97; published 7-21-97

Tennessee; comments due by 8-20-97; published 7-21-97

Virginia; comments due by 8-20-97; published 7-21-97

Air quality planning purposes; designation of areas:

Louisiana; correction; comments due by 8-18-97; published 7-17-97

Superfund program:

National oil and hazardous substances contingency plan—

National priorities list update; comments due by 8-18-97; published 7-17-97

EQUAL EMPLOYMENT OPPORTUNITY COMMISSION

Federal claims collection; administrative offset; comments due by 8-18-97; published 6-17-97

FEDERAL COMMUNICATIONS COMMISSION

Common carrier services:

Competitive access providers and local exchange carriers; complete detariffing; comments due by 8-18-97; published 7-17-97

Correction; comments due by 8-18-97; published 7-28-97

Satellite communications—

Non-U.S. licensed satellites providing domestic and international service in U.S.; uniform standards; comment request; comments due by 8-21-97; published 7-29-97

Radio stations; table of assignments:

Iowa; comments due by 8-18-97; published 7-9-97

Mississippi; comments due by 8-18-97; published 7-9-97

GENERAL SERVICES ADMINISTRATION

Federal property management:

Utilization and disposal—

Government-owned improvements and related personal property on surplus land; comments due by 8-19-97; published 6-20-97

HEALTH AND HUMAN SERVICES DEPARTMENT

Food and Drug Administration

Food for human consumption:

Dietary supplements containing ephedrine alkaloids; comments due by 8-18-97; published 6-4-97

HEALTH AND HUMAN SERVICES DEPARTMENT

Health Care Financing Administration

Medicare:

Ambulance services; coverage and payment policies; comments due by 8-18-97; published 6-17-97

Physician fee schedule (1998 CY); payment policies and relative value unit adjustments and clinical psychologist fee schedule; establishment; comments due by 8-18-97; published 6-18-97

HOUSING AND URBAN DEVELOPMENT DEPARTMENT

Public and Indian housing:

Native American Housing Assistance and Self-Determination Act of 1996; implementation; comments due by 8-18-97; published 7-2-97

INTERIOR DEPARTMENT

Fish and Wildlife Service

Endangered and threatened species:

Recovery plans—

Marsh sandwort, etc.; comments due by 8-22-97; published 6-23-97

Stephens' kangaroo rat; comments due by 8-22-97; published 6-23-97

Hunting and fishing:

Refuge-specific regulations; comments due by 8-20-97; published 7-21-97

Migratory bird permits:

Double-crested cormorant; depredation order implementation; comments due by 8-22-97; published 6-23-97

INTERIOR DEPARTMENT
Minerals Management Service
Outer Continental Shelf; oil, gas, and sulphur operations:
Oil-spill contingency plans for facilities seaward of coast line; comments due by 8-22-97; published 5-5-97

LABOR DEPARTMENT
Employment Standards Administration
Federal Coal Mine Health and Safety Act of 1969, as amended:
Black Lung Benefits Act—
Individual claims by former coal miners and dependents processing and adjudication; regulations clarification and simplification; comments due by 8-21-97; published 5-16-97

SECURITIES AND EXCHANGE COMMISSION
Investment companies and securities:
Registration fees; calculation methods and payment requirements; comment request; comments due by 8-18-97; published 7-18-97

TRANSPORTATION DEPARTMENT
Coast Guard
Vessel inspections:
User fees; reductions and exemptions; comments due by 8-19-97; published 4-21-97

TRANSPORTATION DEPARTMENT
Federal Aviation Administration
Airworthiness directives:
de Havilland; comments due by 8-18-97; published 7-11-97
Boeing; comments due by 8-22-97; published 7-15-97
General Dynamics (Convair); comments due by 8-18-97; published 7-9-97
Saab; comments due by 8-19-97; published 6-20-97

TRANSPORTATION DEPARTMENT
Federal Highway Administration
Planning and research:
Federal-aid highway systems changes; comment request; comments due by 8-18-97; published 6-19-97
Right-of-way and environment:
Mitigation of impacts to wetlands; comments due by 8-18-97; published 6-18-97

TRANSPORTATION DEPARTMENT
Federal Transit Administration
Charter service:
Charter services demonstration program; comments due by 8-22-97; published 6-23-97

TREASURY DEPARTMENT
Internal Revenue Service
Income taxes:
Guidance regarding charitable remainder trusts; hearing; comments due by 8-19-97; published 4-18-97

TREASURY DEPARTMENT
Currency and foreign transactions; financial reporting and recordkeeping requirements:
Banck Secrecy Act; implementation—
Money transmitters; special currency transaction reporting requirement; comments due by 8-19-97; published 5-21-97

Currency and foreign transactions; financial reporting and recordkeeping rquirements:
Bank Secrecy Act; implementation—
Money services businesses; comments due by 8-19-97; published 5-21-97

Currency and foreign transactions; financial reporting and recordkeeping requirements:
Bank Secrecy Act; implementation—
Money transmitters and money order and traveler's check issuers, sellers and redeemers; suspicious transaction reporting requirements; comments due by 8-19-97; published 5-21-97