ARCHITECTURAL AND TRANSPORTATION BARRIERS COMPLIANCE BOARD

36 CFR Part 1191

[Docket No. 94–2]

RIN 3014–AA17

Americans With Disabilities Act (ADA) Accessibility Guidelines for Buildings and Facilities; Building Elements Designed for Children's Use

AGENCY: Architectural and Transportation Barriers Compliance Board.

ACTION: Final rule.

SUMMARY: The Architectural and Transportation Barriers Compliance Board (Access Board) is issuing final guidelines to provide additional guidance to the Department of Justice and the Department of Transportation in establishing alternate specifications for building elements designed for use by children. These specifications are based on children's dimensions and anthropometrics and apply to building elements designed specifically for use by children ages 12 and younger. This rule ensures that newly constructed and altered facilities covered by titles II and III of the Americans with Disabilities Act of 1990 are readily accessible to and usable by children with disabilities. The standards established by the Department of Justice and the Department of Transportation must be consistent with these guidelines.

DATES: Effective date: April 13, 1998.

FOR FURTHER INFORMATION CONTACT: Dave Yanchulis, Office of Technical and Information Services, Architectural and Transportation Barriers Compliance Board, 1331 F Street NW., suite 1000, Washington, DC 20004–1111. Telephone number (202) 272–5434 extension 27 (voice) or (800) 872–2253 ext. 27 (voice); (202) 272–5449 (TTY) or (800) 993–2822 (TTY).

SUPPLEMENTARY INFORMATION:

Availability of Copies and Electronic Access

Single copies of this publication may be obtained at no cost by calling the Access Board's automated publications order line (202) 272–5434 or (800) 872–2253, by pressing 1 on the telephone keypad, then 1 again and requesting publication S–30, Building Elements Designed for Children's Use Final Rule. Persons using a TTY should call (202) 272–5449 or (800) 993–2822. Please record a name, address, telephone number and request this publication. Persons who want a copy in an alternate format should specify the type of format (audio cassette tape, Braille, large print, or computer disk). This document is also available on the Board's Internet site (http://www.access-board.gov/rules/child.htm).

Background

The Americans with Disabilities Act of 1990 (ADA) (42 U.S.C. 12101 *et seq.*) is a comprehensive civil rights law which prohibits discrimination on the basis of disability. Titles II and III of the ADA require, among other things, that newly constructed and altered State and local government buildings, places of public accommodation, and commercial facilities be readily accessible to and usable by individuals with disabilities. The Access Board is responsible for developing accessibility guidelines for the construction and alteration of such facilities so that they are accessible as required by the ADA. The Access Board initially issued the Americans with Disabilities Act Accessibility Guidelines (ADAAG) in 1991 (36 CFR part 1191, appendix A).

Under the ADA the Department of Justice is responsible for issuing regulations to implement titles II and III of the Act. The regulations issued by the Department of Justice include accessibility standards for newly constructed and altered facilities covered by titles II and III of the ADA. These standards must be consistent with the accessibility guidelines issued by the Access Board. The Department of Justice has adopted ADAAG as its Standards for Accessible Design, published as appendix A to 28 CFR part 36 and intends to amend those standards by adding the alternate specifications adopted by the Access Board for building elements designed for use by children. Until such time as the Department of Justice adopts these guidelines as standards, the guidelines are advisory only and are not to be construed as requirements.

In 1986 the Access Board issued ''Recommendations for Accessibility Guidelines to Serve Physically Handicapped Children in Elementary Schools.'' The report included recommended modifications or additions based on children's sizes to certain sections of an earlier accessibility rule, the Uniform Federal Accessibility Standards (UFAS). The recommendations were developed to assist states in designing and constructing accessible elementary schools. Many states and localities have applied these recommendations to newly constructed schools serving grades one through six.

ADAAG as published in 1991 did not provide requirements based on children's dimensions. ADAAG includes a provision, 2.2 (Equivalent Facilitation), which permits departures from ADAAG requirements that provide equal or greater access. While this provision may serve as the basis for departures from ADAAG in designing for access according to children's dimensions, designers and others have sought specific guidance and technical criteria in this area.

In 1992, new recommendations were developed through a research project sponsored by the Access Board. The project studied accessibility requirements for children with disabilities at a variety of facilities. The Center for Accessible Housing (CAH) at North Carolina State University in Raleigh, North Carolina conducted this study, which included a review of codes, standards, and guidelines, ergonomic studies and evaluation literature, and post-occupancy evaluations of children's facilities. This study focused on facilities serving pre-kindergarten and elementary school-aged children and, to a lesser extent, facilities serving infants and toddlers. The recommended guidelines developed from this study are known as ''Recommendations for Accessibility Standards for Children's Environments,'' (referred to as the ''CAH study'' in the preamble to this rule).[1]

On February 3, 1993, the Access Board published an advance notice of proposed rulemaking (ANPRM) in the **Federal Register** (58 FR 6924). The ANPRM sought comment on general issues, such as the recommended scope of these guidelines and the ages or grades that should be covered. The ANPRM also requested information on standards or guidelines for children's environments currently in use, building products and technologies currently available that specifically serve children, and elements and features unique to children's environments that may merit specific attention. Approximately 75 comments were received in response to the ANPRM. Commenters included state and local departments of education, groups representing children with disabilities, plumbing fixture manufacturers, individuals, and design professionals. These comments were analyzed and used in the development of proposed guidelines.

On July 22, 1996, the Access Board issued jointly with the Department of

[1] Print or computer disk copies of these recommendations are available from the Access Board.

Justice a notice of proposed rulemaking (NPRM) for children's facilities in the **Federal Register** (61 FR 37964). This rule proposed adding a special occupancy section to ADAAG entitled ''15. Children's Facilities.'' The proposed rule modified ADAAG requirements for application to facilities or portions of facilities constructed primarily for use by children ages 2 through 12. Section 15 applied ADAAG 4.1 through 4.35 but modified various requirements. Requirements addressed reach ranges (15.2), protruding objects (15.3), handrails at ramps and stairs (15.4), drinking fountains and water coolers (15.5), water closets (15.6), toilet stalls (15.7), lavatories and mirrors (15.8), storage (15.9), and fixed or built-in seating and tables (15.10). The proposed rule asked questions about these elements and other design considerations concerning clear floor space, knee clearance, accessible routes, door hardware, urinals, sinks, and signage. The proposed rule did not address play settings or fixed play equipment which will be addressed in a separate rulemaking on recreational facilities. The Access Board and the Department of Justice distributed the proposed rule to state departments of education and education associations, the state building code authorities, and other responsible agencies of the 50 states to seek their input and comment.

Over 80 comments were received in response to the proposed rule. The following three groups each represented approximately a quarter of the commenters: parents of children with disabilities, most addressing the needs of children with dwarfism; accessibility consultants and designers, including several that specialize in the design of children's environments; and government entities, such as state departments of education and commissions on disability, local school districts, and several Federal agencies. The remainder of the comments were from local and national disability groups, manufacturers, various trade associations, a code organization, companies that provide child care services, and others. A summary of comments received may be found in the following General Issues section, the Section-by-Section Analysis, and the Other Issues section.

General Issues

This section of the rule addresses issues pertaining to the application of the final rule. Individual provisions addressed in this rule are discussed in detail under the Section-by-Section Analysis below.

The final rule provides alternate specifications based on children's dimensions as exceptions to specifications based on adult dimensions. As exceptions, these specifications are discretionary, not mandatory. This represents a change from the proposed rule, which provided mandatory requirements applicable to facilities or portions of facilities constructed according to children's dimensions. Also, the final rule focuses more clearly on elements used primarily by children than the proposed rule, which applied to ''facilities or portions of facilities constructed according to children's dimensions.''

Comment. Several commenters stated that it was not clear whether the proposed children's guidelines were mandatory requirements or permitted alternatives to ADAAG requirements based on adult dimensions. One commenter recommended that the children's guidelines be written as exceptions to ADAAG requirements.

Response. Generally, buildings codes and best practices specify that elements and facilities be provided at heights and locations appropriate for the primary user population served. Although children are rarely the sole occupant or user of facilities, codes and best practices often specify that elements such as drinking fountains, lavatories, and toilet seats be mounted at heights according to children's size where children are the primary users. The proposed rule was not intended to create a new obligation for covered entities to design or construct elements according to children's dimensions and anthropometrics. Instead, it applied mandatory specifications where building elements are designed or constructed according to children's dimensions and anthropometrics. In the final rule, the guidelines have been incorporated into ADAAG as exceptions to technical requirements so that these guidelines function as permitted departures from requirements based on adult dimensions where certain elements are designed for use primarily by children. The decision to use an exception is optional but will likely be determined where best practices or building codes call for design based on children's dimensions. Consequently, making the requirements of this rule discretionary should not affect the intended application of this rule as proposed. If an exception in this rule is used, then the technical specifications they contain or reference must be followed (although as with any ADAAG requirement, departures providing equal or greater access are permitted under the provision of equivalent facilitation at ADAAG 2.2).

Comment. A majority of commenters supported the approach taken in the proposed rule, including its organization as a special occupancy section. However, some considered the application and scope of section 15 too vague. The proposed rule's application to ''facilities or portions of facilities'' designed for children was an apparent source of confusion as some commenters noted that it was not clear which types of facilities were covered. Several commenters recommended that a variety of facilities be specifically addressed in the final rule, including museums, libraries, shopping malls, nurseries, day care centers, cafeterias, and others.

Response. For clarity, the final rule has been reorganized to focus more clearly on building elements designed for use by children instead of facilities or portions of facilities. The specifications of the proposed special occupancy section have been incorporated into ADAAG as exceptions to technical requirements based on adult dimensions instead of as a special occupancy section. These exceptions are usable regardless of whether the facility primarily serves children, such as a school, or equally serves adults, such as a museum, shopping mall, or restaurant. The basis for the exception is not the type of facility, but the provision of elements based on children's dimensions.

Comment. The proposed rule covered facilities or portions of facilities constructed according to children's dimensions and anthropometrics for ages 2 through 12. The dimensions of children aged 2 and older are reflected in many existing state and local education or building design guidelines and recommendations. With respect to schools or areas within schools serving children over 12 years old, most states apply design standards based on adult dimensions. A majority of comments did not support the proposed age range. While a few recommended broadening this range to cover children younger than 2 or older than 12, most favored reducing the range. These comments stated that children younger than 5, including those without disabilities, often need assistance or supervision in using elements such as water closets. Some recommended that children's guidelines apply where facilities or elements are designed for use by children over ages 4 or 5. A design firm that specializes in child care facilities recommended that access not be required to all toilet rooms serving children in child care facilities due to

the space and cost impact. According to this commenter, toilet rooms in child care facilities are an ''extension of the classroom'' where, until age 5 or 6, children learn proper health habits.

Response. The final rule covers access for children ages 12 and younger. The age at which children independently use various building elements such as water closets varies. Also, adult assistance and supervision helps teach children how to use such elements by themselves. Thus accessibility, which includes features such as grab bars at water closets, is essential for children with disabilities to learn how to independently use water closets and other fixtures. For these reasons, coverage of children below age 5 has been retained in the final rule. However, a minimum age is not specified in the final rule since the decision to design a space or element according to children's sizes will typically drive the use of these alternate specifications. For example, if a toilet room is intended primarily for young children and is designed according to children's dimensions, then the alternate specifications will likely be used since the only alternatives would be ADAAG requirements based on adult dimensions or departures based on ''equivalent facilitation'' which provide equal or greater access. Toilet rooms not designed according to children's dimensions, including those that serve young children, do not have to comply with the alternate specifications. Exceptions of this rule for lavatories, sinks, and fixed seating and tables cover elements used primarily by children ages 5 and younger and address conflicts between current design practice and accessibility requirements. These are further discussed below in the Section-by-Section Analysis.

Section-by-Section Analysis

This section of the preamble summarizes each of the provisions of the final rule and the comments received in response to the proposed rule. Where the provision in the final rule differs from that of the proposed rule, an explanation of the modification is provided. Building elements addressed by the proposed rule but not included in the final rule are discussed in a following section labeled Other Issues.

2 General

2.1 Provisions for Adults and Children

The final rule contains alternate specifications based on children's dimensions as exceptions to ADAAG technical requirement for drinking fountains, water closets, toilet stalls, lavatories, sinks, and fixed or built-in seating and tables. This is indicated in a revision to a general statement in ADAAG 2.1 that previously recognized only adult dimensions and anthropometrics. As revised in the final rule, this provision notes that ADAAG provides alternate specifications based on children's dimensions and anthropometrics for these elements.

4 Accessible Elements and Spaces: Scope and Technical Requirements

4.2 Space Allowances and Reach Ranges

4.2.5 Forward Reach. 4.2.6 Side Reach. The proposed rule specified maximum and minimum mounting heights for controls and operating mechanisms and storage elements designed for children's use. These heights were specified for three age ranges: 36 inches (high) and 20 inches (low) for ages 2 through 4, 40 inches (high) and 18 inches (low) for ages 5 through 8, and 44 inches (high) and 16 inches (low) for ages 9 through 12. Consistent with CAH recommendations, these ranges were the same for forward and side reaches. The proposed rule also addressed the height of storage elements and referenced the reach range requirements. The proposed reach ranges for children have been included in the final rule as advisory information in an appendix note to 4.2.5 (Forward Reach) and 4.2.6 (Side Reach). This information notes that these specifications are recommended for fixed building elements or controls designed for use primarily by children 12 and younger and that those designed for use by adults only need not be located within the recommended ranges. The reach ranges are consistent with the proposed rule except that the ages covered start at 3 years instead of 2 years. ADAAG 4.25 (Storage) and 4.27 (Controls and Operating Mechanisms) reference the reach range requirements in 4.2.5 and 4.2.6. Since the appendix information on children's reach ranges is relevant to these sections as well, cross references to A4.2.5 & 4.2.6 (Reach) have been added to the appendix at A4.25 and A4.27.

Comment. The proposed rule asked whether the proposed reach ranges were appropriate for children ages 2 through 12 (Question 3) and also requested data on children's reaches over obstructions (Question 4). Specifications for obstructed reaches were not proposed due to insufficient information. Some commenters supported the proposed specifications while others opposed the approach as too complex and recommended that a single range be used for all ages covered. Parents of children with dwarfism recommended further study so that the needs of children of short stature are addressed. These commenters included the age and measured high reach of their child although how this reach was measured was not indicated. The average reach height by age group among these children was 33 inches for ages 2 through 4, 41 inches for ages 5 through 8, and 44 inches for ages 9 through 12. Some commenters advised that the rule should exempt elements intended for adult use only, such as fire extinguishers and alarms, electrical receptacles, phones and intercoms, and thermostats. A few comments noted that elements must be at least 54 inches from the floor to be considered out of children's reach (which is the maximum permitted by ADAAG for an adult side reach). Conversely, some comments recommended that certain elements such as telephones and elevator controls be covered by the children's rule. Few commenters provided information or anthropometric data on the appropriateness of the proposed specifications or on reaches over obstructions.

Response. The CAH study recommended a reach range of 20 inches (low) to 36 inches (high) for all children. However, the ergonomic data evaluated in this study did not conclusively justify limiting specifications for children older than 4 years to this range. Reach range specifications, including those for obstructed reaches, have not been included in the text of the rule due to a lack of sufficient data. The proposed specifications have been included in the final rule in the appendix as advisory (non-mandatory) information. This information will provide guidance where certain building elements, such as lockers, and controls are to be designed according to the dimensions of children ages 12 and younger.

4.8 Ramps

4.9 Stairs

The proposed rule required a second set of handrails at ramps and stairs that serve elements or spaces constructed according to children's dimensions. This requirement specified a mounting height of 20 to 28 inches measured from the ramp surface or stair nosing to the top of the gripping surface. These specifications were derived from the CAH study and were similar to several state requirements or recommendations. ADAAG requires a mounting height of 34 to 38 inches for handrails based on

adult dimensions. A requirement for secondary handrails has not been included in the text of the final rule. However, advisory information on lower handrails has been added to the appendix at A4.8 and A4.9. This information recommends a secondary set of handrails at ramps or stairs in facilities that primarily serve children, such as elementary schools. A maximum handrail height of 28 inches is recommended. It is also recommended that the vertical clearance between handrails be at least 9 inches in order to reduce the risk of entrapment.

Comment. The vertical clear space between the handrails required by ADAAG and the proposed lower rail for children's use could range from 4½ to 16¾ inches. The proposed rule sought comment on whether this posed an entrapment hazard (Question 6) and whether a clearance of as a little as 4½ inches was sufficient for gripping the lower rail (Question 7). Most commenters stated that this requirement would pose an entrapment hazard. Several noted specifications in model codes that address openings such as those between vertical guardrails which require them to be spaced or to have a pattern that prevents passage of a 4 inch sphere (1994 UBC section 509.3, BOCA Section 1021.3 1996). Several comments indicated that certain guidelines, such as the Consumer Product Safety Commission Handbook for Playground Safety, consider openings between 3½ inches and 9 inches to be a hazard. Some commenters recommended a height of 26 to 28 inches as safer and noted that a rail as low as 20 inches can become a climbing structure or produce a ''ladder effect.'' One commenter cited research which suggests that children over age 7 can use handrails at adult heights. Comments were divided on the question of whether a 4½ inch vertical clearance between handrails will allow sufficient room for grasping the lower rail. Some considered the 4½ inch clearance sufficient while almost an equal number did not and recommended minimum clearances ranging from 6 to 9 inches.

Response. A requirement for lower handrails has not been included in the final rule. Additional guidance has been added to an appendix note at A4.8.5 (Handrails) which recommends a second set of handrails where children are the principal users in a building or facility. The final rule adds a recommendation for a maximum height of 28 inches for the lower handrail and a vertical clearance between handrails of at least 9 inches. A reference to this appendix note is provided for stairs at A4.9.5 (Handrails).

ADAAG 4.8 (Ramps) specifies that the ramp slope not exceed 1:12 and limits the rise of each run to 30 inches. The Board sponsored a research project conducted by the Center for Universal Design at North Carolina State University to re-evaluate specifications for ramps. Completed in 1996, this study included subject testing with a test sample of more than 170 subjects. However, only a small portion (2.9%) of subjects were under age 16. The overall conclusion of this study was to retain without change existing ADAAG technical requirements for ramps, including those for slope and rise. The study noted that age seemed to have little bearing on the ability of subjects to use ramps.[2]

The CAH children's study and comments to the ANPRM considered the 1:12 maximum slope too steep for children and recommended slopes of 1:16 to 1:20 to take into account the differences in strength and stamina between children and adults. The CAH study also recommended a maximum length run of 20 feet for ramps in children's's facilities since children do not have as much strength as adults in negotiating longer ramps. For ramps with a maximum slope of 1:12, ADAAG requires a maximum length of 30 feet for each run.

Comment. The Board sought comment on whether a lower slope should be specified for ramps designed for children's use (Question 23) and whether ramps should be limited to a 20 foot length (Question 24). Commenters were divided on both questions. Comments supporting a lower slope varied in their recommendations between a 1:16 maximum, a 1:20 maximum, or a range in between. Some commenters opposed a lower slope and shorter length due to the space impact of shallower ramps and additional intermediate landings. A few commenters deferred to the Board's ramp study.

Response. Alternate specifications for ramps based on children's strength and stamina are not included in the final rule. Further study is considered necessary to determine whether alternative criteria are necessary for children with disabilities.

4.15 Drinking Fountains and Water Coolers

This section of the rule modifies ADAAG 4.15 (Drinking Fountains and Water Coolers) by providing an exception for drinking fountains used primarily by children ages 12 and younger. ADAAG 4.15.5(1) requires that drinking fountains cantilevered from walls or posts provide knee clearance (27 inches minimum) and toe clearance (9 inches minimum) below the unit for a forward approach. Under the exception provided in the final rule, these clearances are not required at units designed for use primarily by children ages 12 and younger so long as space for a parallel approach is provided and the spout is no higher than 30 inches from the ground or floor surface. This differs from the proposed rule, which specified a maximum spout height of 30 inches but also required a minimum knee clearance of 24 inches and a minimum toe clearance of 12 inches.

Comment. Comment was sought on whether products are currently available that meet the proposed specifications and, if not, information was requested on conflicting product or design specifications (Question 9). Several comments indicated that products meeting the proposed specifications are available but did not specify a type or model. Several other commenters, including a manufacturer of drinking fountains, stated that refrigerated units that meet the criteria are not available. The main conflict is the required knee and toe clearances which do not permit space for the refrigeration system below units mounted to provide a 30 inch spout height. Non-refrigerated units may meet these requirements if a remote chiller is used. According to the manufacturer, units with a refrigeration system located both above and below the top of the unit could be developed although the costs and volume potential for such units are not currently known.

Response. The final rule does not require knee and toe clearance below units mounted at children's heights (30 inch maximum spout height) so long as space for a parallel approach complying with 4.2.4 is provided. While a forward approach is preferred for easier access, this exception is provided due to remaining questions about the availability of complying products and the impact of possible design and product solutions that, in effect, may discourage provision of drinking fountains at children's heights.

4.16 Water Closets

This section of the rule modifies ADAAG 4.16 (Water Closets) by providing an exception for water closets used primarily by children ages 12 and younger. Under this exception, compliance with 4.16.7 (Water Closets

[2] ''A Review of Technical Requirements for Ramps,'' 1996 is available from the Board in hard copy and on computer disk.

for Children), is permitted as an alternative to the specifications in sections 4.16.2 through 4.16.6. This subsection tracks 4.16 (Water Closets) in providing requirements for clear floor space, the height of water closets, grab bars, flush controls and dispensers and provides specifications from the proposed rule derived from the CAH study. Most of these provisions provide specifications as a range. An appendix note provides additional guidance on applying these specifications according to three age groups: 3 and 4, 5 though 8, and 9 through 12.

Comment. The proposed rule provided specifications for water closets in a chart according to three age groups: 2 through 4, 5 through 8, and 9 through 12. The Board sought information on alternate specifications that would singularly serve children ages 2 through 12 (Question 10). Comments did not recommend alternative specifications but did question the need to include requirements for children 2 to 4 years old since children of this age, including those without disabilities, may need adult assistance in using water closets. Several considered different specifications based on three age groups confusing and urged simplification of this section.

Response. In the final rule, the specifications for the three age groups have been combined into a single range for simplicity. An appendix note to 4.16.7 provides guidance in applying these specifications according to the three age groups. In addition, the youngest age range has been changed from ''2 to 4 years'' to ''3 and 4 years.'' However, this appendix information is advisory so that the specifications for this table can be applied to water closets serving children younger than three years as appropriate.

4.16.7(1) Clear Floor Space. Section 4.16.7(1) (Clear Floor Space) requires that water closets which are not located in stalls comply with Figure 28 except that the centerline of the water closet shall be 12 inches minimum to 18 inches maximum from the side wall or partition. ADAAG specifications based on adult dimensions in 4.16.2 require a centerline placement of 18 inches absolute. An appendix note to 4.16.7 recommends a centerline placement of 12 inches for children ages 3 and 4, 15 inches for children ages 5 through 8, and 15 to 18 inches for children ages 9 through 12. These specifications are the same as those in the proposed rule. Few comments addressed this requirement.

4.16.7(2) Height. Section 4.16.7(2) (Height) specifies that the height of water closets be 11 to 17 inches measured to the top of the toilet seat and prohibits seats that are sprung to return to a lifted position. ADAAG 4.16.3 (Height) requires a height of 17 to 19 inches for water closets serving adults. The appendix recommends a seat height of 12 inches for ages 3 and 4, 12 to 15 inches for ages 5 through 8, and 15 to 17 inches for ages 9 through 12. These specifications are consistent with those of the proposed rule.

4.16.7(3) Grab Bars. Section 4.16.7(3) (Grab Bars) requires that grab bars be provided on the side and rear wall at toilets as shown in Figure 29 but requires a mounting height of 18 to 27 inches instead of 33 to 36 inches as is specified for adults. The rear grab bar is required to be at least 36 inches long. An appendix note recommends a grab bar height between 18 to 20 inches for ages 3 and 4, 20 to 25 inches for ages 5 though 8, and 25 to 27 inches for ages 9 through 12.

Comment. The heights specified for grab bars will conflict with most tank-type water closets. The proposed rule asked whether tank-type models are commonly used in facilities serving children and requested information on the cost difference between water closets with tanks and those without (Question 11). A majority of commenters indicated that water closets with tanks are rarely used in children's facilities because of maintenance and safety considerations. Some commenters noted that water closets with tanks are typically used where the water pressure is insufficient to use water closets with flush valves. A few noted that facility capacity, operation, and maintenance policies may be a factor in this determination as well. Of the few comments providing cost estimates, there was little consensus. Estimates included a 100 percent increase in the cost of water closets without tanks while another considered the cost to be about the same. One designer suggested a $300 to $400 cost increase, including installation, in the use of water closets without tanks. A few commenters indicated that complying products with tanks are available.

Response. A rear grab bar is essential for access to water closets. While there may be a cost increase in the use of complying models with tanks or models without tanks, such an impact will occur only in those limited instances where a standard tank-type model is preferred. The requirement for rear grab bars has been retained in the final rule.

Comment. The proposed rule asked whether the grab bar heights specified for children conflict with any building or plumbing code requirements for flush control location, size, or height (Question 12). Most comments indicated that a rear grab bar mounted at the proposed heights will conflict with industry standards for flush controls rather than building or plumbing codes. According to commenters, standard flush control design requires a clearance of approximately 14 to 17 inches above the top of the toilet seat (which includes approximately 3 inches for maintenance and replacement). Several comments recommended design solutions including concealing the flush valve unit in the wall or plumbing chase or splitting the rear grab bar.

Response. An exception is provided in the final rule that allows the rear grab bar to be split or to be shifted to the open side of the water closet where the flush control location required by administrative authorities conflicts with the grab bar. Since water closets designed for children may be located closer to the side wall (12 to 18 inches centerline), splitting the rear grab bar may not always be practicable. Consequently, this exception permits a shorter rear grab bar 24 inches long minimum on the open side of the toilet area at water closets with a centerline placement below 15 inches.

Comment. The proposed rule specified a 1 to 1¼ inch diameter for grab bars, which differs from the 1¼ to 1½ inch diameter ADAAG requires for adults in ADAAG 4.26 (Handrails, Grab Bars, and Tub and Shower Seats). With respect to handrails at ramps and stairs, the proposed rule asked whether this should be specified as an outer diameter since industry practice specifies pipe size by the inner diameter (Question 8). Under a 1¼ inch specification, this could lead to an outer diameter of 1⅝ inches. Commenters supported an outer diameter specification of 1 to 1¼ inches but an equal number either preferred the 1¼ to 1½ inch range or suggested allowing a 1⅝ inch outer diameter. One commenter noted that a 1½ inch diameter is better for children ages 5 through 12 but did not include any supporting data. The vast majority of comments stressed that the specification should address the outer diameter of handrails so that there is less ambiguity in the use of pipe.

Response. The proposed requirement for a 1 to 1¼ inch grab bar diameter has not been retained in the final rule. The requirement for grab bars in 4.16.7(3) references ADAAG 4.26, which specifies a 1¼ to 1 ½ inch diameter for grab bars and handrails. ADAAG Figure 39 indicates that this applies to the outer diameter; however standard pipe sizes designated by the industry as 1¼ inch to 1½ inch are acceptable. A requirement for handrails designed for

children at ramps and stairs has not been included in the final rule.

Comment. Some building codes require grab bars to have textured surfaces. The proposed rule asked whether grab bars for children should be textured and, if so, which types of texturing are most effective (Question 13). Most comments supported such a requirement and recommended knurled or peened textures, standard brush finishes, and rubber covering. Several comments noted that some textures are hard to clean and may not meet sanitation requirements. One comment from a local disability group stated that further study was needed.

Response. Further information is needed on the appropriateness and effectiveness of various textures before requiring grab bars to be textured. A requirement for texturing is not included in the final rule.

4.16.7(4) Flush Controls. Section 4.16.7(4) (Flush Controls) requires flush controls for water closets serving children to be hand operated or automatic and meet requirements for controls and operating mechanisms in ADAAG 4.27.4 (Operation). It also specifies that flush valves must be mounted on the wide side of the toilet no more than 36 inches above the floor. The proposed rule required that flush controls be located within the reach ranges proposed for three age groups: a maximum 36 inch height at water closets serving children ages 2 through 4, a 40 inch height at those serving children ages 5 through 8, and a 44 inch maximum height at those serving children ages 9 through 12.

Comment. The proposed rule asked whether these heights conflict with any plumbing codes, industry practices, or design practices (Question 14). Most commenters responding to this question noted that industry conventions for flush controls will conflict with the requirement for grab bars mounted 20 to 27 inches high on the wall behind the water closet. Conventional flush control design requires a clearance above the toilet seat of approximately 14 to 17 inches according to several comments.

Response. The final rule specifies a maximum height of 36 inches for flush controls at water closets serving children 12 and younger and does not recognize higher heights for older children within this age range. Since information from commenters indicates that this height will not conflict with plumbing or design and industry practices, this change has been made for easier access and simplicity. An exception to the requirement for rear grab bars has been provided to address conflicts between industry conventions for flush controls and rear grab bars. See 4.16.7(3) (Grab Bars) above.

4.16.7(5) Dispensers. Section 4.16.7(5) (Dispensers) requires toilet paper dispensers to be 14 to 19 inches above the finished floor measured to the dispenser centerline and prohibits those that control delivery or that do not provide continuous paper flow. ADAAG 4.16.6 (Dispensers) requires a 19 inch minimum height at water closets designed for adults. The appendix recommends a dispenser height of 14 inches for ages 3 and 4, 14 to 17 inches for ages 5 through 8, and 17 to 19 inches for ages 9 through 12. Few comments addressed these specifications and no substantive changes have been made in the final rule.

4.17 Toilet Stalls

This section of the rule modifies ADAAG 4.17 (Toilet Stalls) by providing an exception for toilet stalls used primarily by children ages 12 and younger. Under this exception, compliance with 4.17.7 (Toilet Stalls for Children) is permitted as an alternative to specifications in 4.17 based on adult dimensions. This subsection is modeled after 4.17.2 through 4.17.6 in providing requirements for water closets, stall size and arrangement, toe clearances, doors, and grab bars. The specifications it contains are derived from the CAH study and were included in the proposed rule. An appendix note to 4.17.7 references recommendations in A4.16.7 for water closets, grab bars, and dispensers based on three age groups: 3 and 4, 5 through 8, and 9 through 12.

4.17.7(1) Water Closets. Section 4.17.7(1) (Water Closets) requires water closets to comply with 4.16.7 (Water Closets for Children).

4.17.7(2) Size and Arrangement. Section 4.17.7(2) (Size and Arrangement) is consistent with ADAAG requirements for stalls based on adult dimensions in 4.17.3 (Size and Arrangement) except for water closet placement and minimum stall depth. In stalls designed for use primarily by children, the centerline of water closets is required to be 12 to 18 inches from the side wall or partition. This is consistent with the requirement for children's water closets not located in stalls at 4.16.7(1). It also requires a minimum depth for standard stalls of 59 inches, including where a wall-mounted water closet is provided. ADAAG specifications based on adult dimensions permit a 56 inch minimum stall depth where wall-mounted water closets are provided since additional toe clearance below the fixture is available. This 3 inch ''credit'' is not permitted for standard stalls designed for children because the lower mounting height of children's water closets provides less clearance. The CAH study indicated that children using wheelchairs need a higher clearance because their footrests are set higher from the floor than an adult's footrests. This requirement also applies to alternate toilet stalls required to be at least 69 inches deep.

Comment. The proposed rule asked for information on the cost impact of requiring a 59 inch minimum depth for accessible standard stalls serving children (Question 15). Several comments indicated that the cost impact is minimal.

Response. The stall depth requirements of the proposed rule have been retained in the final rule.

4.17.7(3) Toe Clearances. Section 4.17.7(3) (Toe Clearances) requires that in standard stalls, the front partition and at least one side partition be at least 12 inches above the floor to provide toe clearance. ADAAG requirements based on adult dimensions specify a minimum 9 inch toe clearance. The 12 inch specification is based on a recommendation from the CAH study which indicated that children's wheelchair footrests are generally higher than those of wheelchairs used by adults.

Comment. ADAAG requirements based on adult dimensions do not specify a toe clearance at stalls deeper than 60 inches. The proposed rule asked whether the 12 inch toe clearance should be required in children's stalls deeper than 60 inches (Question 16). Commenters were evenly split on this question. Several designers noted that partitions are typically mounted from 12 to 14 inches above the floor.

Response. In the final rule, a 12 inch toe clearance is required for stall partitions without respect to the compartment depth. This additional maneuvering room is necessary within the confined space of toilet stalls because children using wheelchairs may not be as skilled in maneuvering as adults.

Comment. The proposed rule also asked whether a 12 inch toe clearance compromises privacy at water closets serving children ages 2 through 4 which may have a seat height of 11 to 12 inches (Question 17). Several comments stated that this would compromise privacy while a similar number said that it would not, with some noting that the angle of visibility is a factor. Some comments felt that privacy should not be compromised while others noted that this was less of an issue among children ages 2 through 4.

Response. The final rule retains the 12 inch minimum toe clearance. Where

privacy is a concern at stalls serving young children, a seat height slightly higher than that recommended in the appendix for children ages 3 or 4 (11 to 12 inches) can be used.

4.17.7(4) Doors. Section 4.17.7(4) (Doors) requires that stall doors comply with ADAAG 4.17.5 (Doors), which references section 4.13 (Doors and Doorways) and specifies maneuvering clearances. It does not include different specifications based on children's dimensions and is consistent with the proposed rule.

4.17.7(5) Grab Bars. Section 4.17.7(5) (Grab Bars) requires that grab bars meet the requirements of ADAAG 4.16.7 (Grab Bars) and Figure 30 (a) through (d) but specifies a mounting height of 18 to 27 inches above the finished floor measured to the grab bar centerline instead of the 33 to 36 inches specified for adults. In the appendix, a cross reference is provided to A.4.16.7, which recommends mounting heights within this range based on three age groups: 3 and 4, 5 though 8, and 9 through 12. These specifications are consistent with those of the proposed rule except that the requirement for a 1 to 1¼ inch grab bar diameter has not been included in the final rule as discussed above at 4.16.7(3) (Grab Bars). An exception is provided where the required location of flush controls for flush valves conflicts with the rear grab bar. This exception is discussed at 4.16.7(3) above.

4.19 Lavatories and Mirrors. ADAAG 4.19 provides specifications for lavatories and mirrors that are based on adult dimensions. Section 4.19.2 (Height and Clearances) specifies a maximum rim or counter height of 34 inches, an apron clearance of at least 29 inches, a minimum knee clearance of 27 inches, and a minimum toe clearance of 9 inches. Section 4.19.3 (Clear Floor Space) requires that the clear floor space below the fixture be 17 to 19 inches deep. The final rule provides an exception (number 1) for lavatories used primarily by children ages 6 through 12. This exception permits an apron and knee clearance of 24 inches minimum provided that the rim or counter surface is no higher than 31 inches. Specifications in the proposed rule for the apron clearance (27 inches minimum), toe clearance (12 inches minimum), and the depth of usable clear floor space below the fixture (14 inches maximum) have not been retained in the final rule. The proposed maximum height for the rim or counter surface of 30 inches has been increased to 31 inches. The final rule includes another exception (number 2) under which lavatories used primarily by children ages 5 and younger need not provide these clearances if space for a parallel approach is provided.

Comment. A number of comments indicated that a rim or counter height below 30 inches better serves young children. Most recommended heights fell within a range of 20 to 24 inches for children ages 2 to 5. A few comments noted that in child care facilities, exposed pipes can pose an entrapment hazard and enclosed cabinets are used to prevent such hazards.

Response. Since the standard height of lavatories designed for children 5 years and younger will not accommodate the specified knee clearance (24 inches minimum), clearances for a forward approach are not required at them if space for a parallel approach complying with 4.2.4 is provided. Under this exception, space below lavatories can be enclosed.

Comment. The proposed rule asked whether products are currently available that meet the proposed specifications for lavatories and if not, what the conflicts are with product specifications or designs (Question 18). Most comments noted that complying products are available, including wall-hung and counter top products. Several commenters, including a major manufacturer of lavatories, indicated that a 30 inch maximum height for the rim or counter surface and the proposed 27 inch high apron clearance would permit a fixture thickness of only 3 inches which will not allow adequate structural strength to be built into prefabricated units. In addition, a 6 inch bowl depth and a 12 inch toe clearance leave only 12 inches for two supply pipes, one drain, and a stopper assembly. Information from manufacturers indicates that at least 7 inches is needed between the knee clearance and the rim or counter surface to accommodate lavatory bowls as currently designed.

Response. The proposed requirement for a 27 inch minimum apron clearance and a 12 inch minimum toe clearance have not been included in the final rule. According to the CAH study, a higher toe clearance better serves children (as is recognized for stall partitions in 4.17.7(3) above). However, the standard 9 inch minimum clearance will permit space needed for plumbing. To a certain extent, the height of toe clearance at lavatories is related to the depth of clear floor space below the fixture. Younger children will likely benefit the most from a higher toe clearance; however, their smaller stature may require less pull-up space below the fixture. The 14 inch maximum depth specified in the proposed rule has not been retained in the final rule. The 17 to 19 inch depth specified for this space in ADAAG for adults will maximize the clearance beyond the knee space at lavatories designed for children. The maximum height for the rim or counter surface has been increased from 30 to 31 inches in order to provide sufficient space for the bowl. Consistent with ADAAG specifications for adult lavatories, this will allow 7 inches instead for 6 inches measured from the knee clearance.

Comment. The CAH study recommended that faucets be located within 14 inches from the leading edge of lavatories so that they are within reach for children using wheelchairs. As noted in the proposed rule, the Texas State Building Code (section 2.1.1, Texas Accessibility Standards, April 1, 1994) requires a maximum 18 inch distance at lavatories serving children ages 4 through 11. The proposed rule requested comment on faucet locations no more than 14 inches from the lavatory leading edge and aside or in front of bowls and requested information on new technologies such as automatic sensors (Question 19). Most commenters supported the 14 inch maximum distance and a number advocated automatic sensor faucets. A few commenters supported location of faucets aside bowls. A lavatory manufacturer noted that there have been advancements in the technology used for automatic sensors and that they are easy to maintain, have very few internal moving parts, are less prone to vandalism, and have longer replacement cycles. A design firm noted that it currently specifies automatic sensors for children's lavatories. Several commenters considered the 14 inch maximum appropriate for children ages 2 through 4.

Response. Further information is needed on the appropriateness of requiring faucets to be located no more than 14 inches from the leading edge of lavatories designed for children ages 5 through 12. The specification in the Texas State Building Code suggests that while a 14 inch maximum distance will serve children ages 2 through 4, a greater distance may be acceptable for older children. Because alternative technologies such as automatic sensors are available, the location or distance of faucets has not been specified in the final rule. Additionally, ADAAG Figure 32 requires lavatories to have a horizontal depth of at least 17 inches; fixtures of this depth may permit rear-mounted faucets to be within reach for older children.

Comment. The proposed rule specified that the bottom edge of mirrors above lavatories be mounted no higher than 34 inches above the floor. ADAAG

4.19.6 specifies a 40 inch maximum height based on adult dimensions but recommends full length mirrors to accommodate the broadest range of people, including ambulatory persons, people using wheelchairs, and children. The CAH study recommended full length mirrors, which are commonly provided in elementary school toilet rooms, as mirrors above lavatories are too high for many children to use. The proposed rule sought comment on whether full length mirrors should be required in children's toilet rooms along with clear floor space in front of the mirror outside the swing of doors (Question 20). A majority of commenters supported a requirement for full length mirrors. One design firm indicated that many schools are against placement of mirrors above lavatories. Some opposed or were concerned about such a requirement unless specifications on a minimum mounting height or mirror composition were addressed to prevent breakage. Several recommendations for a minimum mounting height ranged from 6 to 18 inches. A few commenters considered slanted mirrors to work well. One comment urged that any requirement for full length mirrors include appropriate specifications such as size and mounting height and that developing these specifications may require study. Several commenters supported a requirement for clear floor space at mirrors that is outside the door swing.

Response. Specifications for mirror size and height have not been included in the final rule due to insufficient information on what these specifications should be. A recommendation for clear floor space 30 by 48 inches for a forward approach at mirrors that is outside the swing of doors has been added to the appendix note to 4.19.6 which addresses full length mirrors. The appendix also recommends that mirrors located above lavatories designed for children be mounted either at a maximum height of 34 inches (measured from the floor to the bottom edge of the reflecting surface) or at the lowest mounting height permitted by fixtures and related elements.

4.24 Sinks

ADAAG provides technical requirements for sinks based on adult dimensions in 4.24 (Sinks) but does not apply them or indicate which sinks must meet this criteria. The CAH study provided recommendations for sinks designed for children. Like those for lavatories, these recommendations included a maximum rim or counter height of 30 inches and a knee clearance at least 24 inches high. The final rule provides an exception (number 1) for sinks designed for use primarily by children ages 6 through 12. This exception, located at 4.24.3 (Knee Clearance), permits a knee clearance of 24 inches instead of 27 inches provided that the rim or counter height is no higher than 31 inches. These specifications are consistent with those provided for lavatories serving children in 4.19.2. The final rule includes another exception (number 2) under which lavatories used primarily by children ages 5 and younger need not provide these clearances if space for a parallel approach is provided.

Comment. The proposed rule noted that standard mounting heights for sinks serving young children may be 24 to 26 inches high according to some state requirements for educational facilities and asked whether product or design solutions are available that meet both the CAH recommendations and specifications appropriate for standing children (Question 27). Several comments indicated that products are available that meet the CAH recommendations but they did not indicate whether they would also serve young children who do not use wheelchairs.

Response. Since the standard height of sinks designed for children 5 years and younger will not accommodate the specified knee clearance (24 inches minimum), clearances for a forward approach are not required at them if space for a parallel approach complying with 4.2.4 is provided.

4.32 Fixed or Built-in Seating and Tables

ADAAG 4.1.3(18) requires that at least 5 percent of fixed seating and tables comply with 4.32 (Fixed or Built-in Seating and Tables). This section of the rule modifies ADAAG 4.32 by providing an exception for fixed or built-in seating and tables used primarily by children ages 12 and younger. Under this exception, compliance with 4.32.5 (Children's Fixed or Built-in Seating and Tables) is permitted as an alternative to the specifications in sections 4.32.2 through 4.32.4. Section 4.32.5 provides requirements for seating, knee clearance, and table or counter height. An exception to 4.32.5 is provided in the final rule for tables or counters used primarily by children ages 5 and younger. Under this exception compliance with the requirements of 4.32.5 is not required if wheelchair space parallel to tables and counters is provided.

4.32.5(1) Seating. This provision requires that wheelchair space be provided at fixed tables or counters and that this clear floor space not overlap knee space by more than 19 inches. This provision is consistent with 4.32.2 (Seating).

4.32.5(2) Knee Clearances. This provision requires that where wheelchair seating space is provided at tables or counters, knee space at least 24 inches high, 30 inches wide, and 19 inches deep be provided. This requirement differs from 4.32.3 (Knee Clearances), which specifies a minimum knee clearance of 27 inches.

4.32.5(3) Height of Tables or Counters. This section requires that the tops of accessible tables and counters be 26 to 30 inches above the finish floor or ground. This is different from 4.32.4 (Height of Tables or Counters) which specifies a table or counter top height of 28 to 34 inches.

Comment. Several comments advised that lower heights within a range of 16 to 20 inches are often preferred or specified for children 2 to 4 years old.

Response. The exception provided in 4.32.5 for tables and counters used primarily by children ages 5 and younger permits lower surface heights where clear floor space complying with 4.2.4 parallel to the table or counter is provided.

Other Issues

Door Hardware

The Board sought comment on the mounting height of door hardware. The CAH study recommended that door hardware be mounted 30 to 34 inches high for children with disabilities, instead of the 48 inch maximum specified by ADAAG 4.13.9 (Door Hardware). The proposed rule asked whether this height would serve adults adequately (Question 25).

Comment. Support was expressed for a height up to 34 inches but several designers considered this below the standard mounting height for adults, which is within a range of 36 to 42 inches.

Response. An alternative height for door hardware based on children's dimensions is not provided in the final rule. ADAAG 4.13.9 permits hardware to be mounted below 48 inches.

Signage

Tactile signs are required by ADAAG 4.30.6 (Mounting Location and Height) to be mounted 60 inches from the floor measured to the sign centerline. Since this is above the reach height of children, the Board sought comment on whether tactile signs should be provided to serve children as well as adults and, if so, whether there was an

alternative mounting height that would adequately serve both (Question 28).

Comment. A majority of comments indicated that signage is usually intended for use by adults. There was little consensus among commenters supporting an alternative height that would serve children and adults.

Response. An alternative mounting height for tactile signage is not included in the final rule.

Protruding Objects

ADAAG 4.4 (Protruding Objects) specifies that elements mounted on walls such as phones and light fixtures not project more than 4 inches from the wall surface if the leading edge is above 27 inches from the floor. It also specifies that free-standing objects on posts and pylons may overhang 12 inches maximum if the leading edge is above 27 inches from the floor. The 27 inch height is based on the cane sweep of people with vision impairments and range of detection. The cane sweep of children with vision impairments is typically lower. The proposed rule reduced the 27 inch height to 12 inches based on recommendations from the CAH study. This requirement was intended to apply to routes serving facilities or portions of facilities constructed according to children's dimensions and anthropometrics.

Comment. The proposed rule sought comment on whether the proposed requirement for protruding objects should apply only to routes serving facilities or portions of facilities or whether it should also apply to routes leading only to an element designed for children (Question 2). Most comments recommended that the requirement should not apply to routes leading to single elements designed for children. An organization representing people with vision impairment opposed projections with leading edges below 12 inches since children are not as skilled as adults in using canes. The proposed rule also asked about the cost impact of the proposed requirement since it would generally require elements with required knee and toe clearance, such as drinking fountains, to be located in alcoves or to be protected by walls, partitions, or other features. Few commenters provided information in response to this question. Several comments suggested costs between $200 to $500 for wings walls or partitions at a fixture. One commenter recommended that the proposed requirement not apply to those elements required to provide knee clearance.

Response. The final rule has been revised to more clearly focus on elements designed for use primarily by children. Modified specifications for protruding objects however would apply to other elements, including those designed for adult use, along circulation paths. The application of the proposed specification would be difficult to determine or be a source of confusion. Further, an organization representing people with vision impairments suggested that further study in this area may be advisable. Specifications for protruding objects based on children's dimensions are not included in the final rule.

Urinals

The CAH study recommended that urinal rims be 14 inches high maximum and that flush controls be 30 inches high maximum above the floor instead of the 17 inch rim height and the 44 inch flush control height specified by ADAAG 4.18 (Urinals).

Comment. The proposed rule asked whether product or design solutions are available that meet these specifications and code requirements (Question 26). Some comments stated that they were not aware of complying products but suggested design solutions for the mounting height of flush controls. These included mounting the flush control on the floor or next to the urinal on the wall, automatic or electric sensors, or push button controls.

Response. The Board considers additional information on design alternatives necessary before issuing specifications for urinals based on children's dimensions.

Clear Floor Space and Accessible Routes

The CAH study recommended wider widths for clear floor space and accessible routes since a child's upper body strength and maneuvering skill is not as developed as those of an adult. The study recommended a minimum clear floor space width of 36 inches instead of 30 inches and a minimum clear width for accessible routes of 44 inches instead of 36 inches.

Comment. The proposed rule asked whether these recommendations should be included in the final rule (Questions 21 and 22). A slight majority of comments opposed both these recommendations. Of the few comments providing a reason for support or opposition, most addressed cost and space impacts. Some considered the impact to be minimal while others considered it to be significant.

Response. Alternate specifications for clear floor space and accessible routes are not included in the final rule.

Classroom Acoustics

Comment. Organizations representing people who are hard of hearing as well as audiological and acoustical trade associations and consultants recommended that the final rule provide acoustical performance standards for classrooms. These commenters recommended specifications for background noise levels, reverberation time, and the signal to noise ratio.

Response. Acoustical standards have not been included in the final rule because none had been proposed and made available for public comment. While acoustics is an important consideration not only in classrooms but other spaces as well, it has not been addressed at this time.

Technical Assistance

The Access Board provides technical assistance and training for entities covered under the Americans with Disabilities Act. The Access Board's toll-free number allows callers to receive technical assistance and to order publications. The Access Board conducts in-depth training programs to advise and educate the general public, as well as architects and other professionals on the accessibility guidelines and requirements. In addition, the Access Board is developing a manual for use by both technical and general audiences. The general manual on ADAAG requirements will be a useful tool in understanding ADAAG whether for purposes of compliance or as a reference for accessible design.

Regulatory Process Matters

Regulatory Assessment

These guidelines are issued to provide guidance to the Department of Justice and the Department of Transportation in establishing alternate specifications for new construction and alteration of building elements designed for use by children in facilities covered by titles II and III of the ADA. The standards established by the Department of Justice and the Department of Transportation must be consistent with these guidelines.

Under Executive Order 12866, the Board must determine whether these guidelines are a significant regulatory action. The Executive Order defines a ''significant regulatory action'' as one that is likely to result in a rule that may:

(1) Have an annual effect on the economy of $100 million or more or adversely affect in a material way the economy, a sector of the economy, productivity, competition, jobs, the environment, public health or safety, or

State, local, or tribal governments or communities;

(2) Create a serous inconsistency or otherwise interfere with an action taken or planned by another agency;

(3) Materially alter the budgetary impact of entitlements, grants, user fees, or loan programs or the rights and obligations of recipients thereof; or

(4) Raise novel legal or policy issues arising out of legal mandates, the President's priorities, or the principles set forth in the Executive Order.

For significant regulatory actions that are expected to have an annual effect on the economy of $100 million or more or adversely affect in a material way the economy, a sector of the economy, productivity, competition, jobs, the environment, public health or safety, or State, local or tribal governments or communities, a written assessment must be prepared of the costs and benefits anticipated from the regulatory action and any potentially effective and reasonably feasible alternatives of the planned regulation. As discussed in more detail in General Issues and the Section-by-Section analysis above, the final rule addresses elements used primarily by children and is limited to water closets, toilet stalls, lavatories and mirrors, toilet rooms, sinks and seating and tables. Elements covered by this rule are already subject to the scoping and technical provisions of ADAAG. The scoping and technical requirements for these elements in the final rule are addressed as alternatives to existing requirements which are based on adult specifications. These alternative specifications for elements used primarily by children are permitted as an exception to the adult specifications. As such, the application of the specifications for elements used primarily by children is discretionary, not mandatory. The Board has determined that this final rule does not meet the criteria for a significant rule under paragraph (1) above in that it will not have an annual effect on the economy of $100 million or more or adversely affect in a material way the economy, a sector of the economy, productivity, competition, jobs, the environment, public health or safety, or State, local, or tribal governments or communities. Because the final rule does not meet the criteria under paragraph (1) above, a regulatory assessment has not been prepared.

The Board and the Office of Management and Budget (OMB) have, however, determined that this final rule meets the other criteria for a significant regulatory action (i.e., the final rule raises novel, legal or policy issues arising out of legal mandates), and OMB has reviewed the final rule.

The guidelines adhere to the principles of the Executive Order. The Board distributed the proposed rule to state departments of education and education associations, the state building code authorities, and other responsible agencies of the 50 states to seek their review and comment. Those comments were carefully analyzed and the major issues discussed in the Section-by-Section analysis above.

Regulatory Flexibility Act Analysis

Under the Regulatory Flexibility Act, the publication of a rule requires the preparation of a regulatory flexibility analysis if such rule could have a significant economic impact on a substantial number of small entities. For the reasons discussed above, the Board has determined that these guidelines will not have such an impact and accordingly, a regulatory flexibility act analysis has not been prepared.

Federalism Assessment

These guidelines will have limited Federalism impacts. The impacts imposed upon State and local government entities are the necessary result of the ADA itself. Every effort has been made by the Access Board to lessen the impact of these guidelines on State and local government entities. As discussed in more detail in General Issues and the Section-by-Section analysis above, the final rule addresses certain elements used primarily by children. These alternative specifications for elements used primarily by children are permitted as an exception to the adult specifications. The application of the specifications for elements used primarily by children is discretionary, not mandatory and the Board has determined that this final rule will not have a substantial direct effect on States, the relationship between the national government and the States or on the distribution of power and responsibilities among the various levels of government. Accordingly, the preparation of a Federalism Assessment is unnecessary for purposes of this rule under Executive Order 12612.

Unfunded Mandates Reform Act

Under the Unfunded Mandates Reform Act, Federal agencies must prepare a written assessment of the effects of any Federal mandate in a final rule that may result in the expenditure by State, local, and tribal governments, in the aggregate, or by the private sector, of $100 million or more in any one year. Excluded from the requirements of that Act, are provisions which (1) enforce the constitutional rights of individuals; or (2) establish or enforce a statutory right that prohibits discrimination on the basis of race, color, religion, sex, national origin, age, handicap or disability. Guidelines promulgated pursuant to the Americans with Disabilities Act are therefore excluded from the application of the Unfunded Mandates Reform Act and a written assessment is not required for this final rule.

Enhancing the Intergovernmental Partnership

As discussed in the supplementary information above, on July 22, 1996, the Access Board published a NPRM in the **Federal Register** which proposed to amend ADAAG (36 CFR part 1191) by adding a special occupancy section to ADAAG entitled ''15. Children's Facilities.'' Executive Order 12875, Enhancing the Intergovernmental Partnership, encourages Federal agencies to consult with State and local governments affected by the implementation of legislation. Accordingly, following the issuance of the NPRM, the Access Board distributed the proposed rule to state departments of education and education associations, the state building code authorities, and other responsible agencies of the 50 states to seek their input and comment. Over 80 responses to the NPRM were received, including comments from government entities, such as state departments of education and commissions on disability, local school districts, and several Federal agencies. A summary of comments received may be found in General Issues, the Section-by-Section Analysis, and in Other Issues.

List of Subjects in 36 CFR Part 1191

Buildings and facilities, Civil rights, Individuals with disabilities, Transportation.

Authorized by vote of the Access Board on July 9, 1997.

Patrick D. Cannon,

Chairperson, Architectural and Transportation Barriers Compliance Board.

For the reasons set forth in the preamble, part 1191 of title 36 of the Code of Federal Regulations is amended as follows:

PART 1191—AMERICANS WITH DISABILITIES ACT (ADA) ACCESSIBILITY GUIDELINES FOR BUILDINGS AND FACILITIES

1. The authority citation for 36 CFR part 1191 continues to read as follows:

Authority: 42 U.S.C. 12204.

2. Appendix A to part 1191 is amended by revising pages i, ii, 1, 40, 41, 44, 49, 50, and 56; and adding pages 41A, 44A and 56A as set forth below.

3. In part 1191, the appendix to appendix A is amended by revising pages A4, A7 and A10 through A14; and adding pages A4A and A14A as set forth below.

The additions and revisions read as follows:

BILLING CODE 8150–01–P

ADA ACCESSIBILITY GUIDELINES FOR BUILDINGS AND FACILITIES TABLE OF CONTENTS

1. PURPOSE **1**

2. GENERAL **1**

2.1 Provisions for Adults and Children 1
2.2 Equivalent Facilitation 1

3. MISCELLANEOUS INSTRUCTIONS AND DEFINITIONS **2**

3.1 Graphic Conventions 2
3.2 Dimensional Tolerances 2
3.3 Notes 2
3.4 General Terminology 2
3.5 Definitions 2

4. ACCESSIBLE ELEMENTS AND SPACES: SCOPE AND TECHNICAL REQUIREMENTS **5**

4.1 Minimum Requirements 5

4.1.1 Application 5
4.1.2 Accessible Sites and Exterior Facilities: New Construction 6
4.1.3 Accessible Buildings: New Construction 7
4.1.4 (Reserved) 11
4.1.5 Accessible Buildings: Additions 11
4.1.6 Accessible Buildings: Alterations 12
4.1.7 Accessible Buildings: Historic Preservation 14

4.2 Space Allowance and Reach Ranges 14A
4.3 Accessible Route 15
4.4 Protruding Objects 21
4.5 Ground and Floor Surfaces 22
4.6 Parking and Passenger Loading Zones 24
4.7 Curb Ramps 26
4.8 Ramps 27
4.9 Stairs 30
4.10 Elevators 30
4.11 Platform Lifts (Wheelchair Lifts) 36
4.12 Windows 36
4.13 Doors 36

4.14 Entrances 40
4.15 Drinking Fountains and Water Coolers 40
4.16 Water Closets 40
4.17 Toilet Stalls 41A
4.18 Urinals 44
4.19 Lavatories and Mirrors 44A
4.20 Bathtubs 45
4.21 Shower Stalls 45
4.22 Toilet Rooms 45
4.23 Bathrooms, Bathing Facilities, and Shower Rooms 48
4.24 Sinks 49
4.25 Storage 49
4.26 Handrails, Grab Bars, and Tub and Shower Seats 50
4.27 Controls and Operating Mechanisms 51
4.28 Alarms 52
4.29 Detectable Warnings 53
4.30 Signage 53
4.31 Telephones 54
4.32 Fixed or Built-in Seating and Tables 56
4.33 Assembly Areas 56
4.34 Automated Teller Machines 58
4.35 Dressing and Fitting Rooms 58A

5. RESTAURANTS AND CAFETERIAS 59

6. MEDICAL CARE FACILITIES 60

7. BUSINESS, MERCANTILE AND CIVIC 61

8. LIBRARIES 62

9. ACCESSIBLE TRANSIENT LODGING 63

10. TRANSPORTATION FACILITIES 67

11. JUDICIAL, LEGISLATIVE AND REGULATORY FACILITIES 72

12. DETENTION AND CORRECTIONAL FACILITIES 74

13. RESIDENTIAL HOUSING (Reserved) 76

14. PUBLIC RIGHTS-OF-WAY (Reserved) 76

APPENDIX A1

1. PURPOSE.

This document contains scoping and technical requirements for accessibility to buildings and facilities by individuals with disabilities under the Americans with Disabilities Act (ADA) of 1990. These scoping and technical requirements are to be applied during the design, construction, and alteration of buildings and facilities covered by titles II and III of the ADA to the extent required by regulations issued by Federal agencies, including the Department of Justice and the Department of Transportation, under the ADA.

The technical requirements in section 4 (Accessible Elements and Spaces: Scope and Technical Requirements), are the same as those of the American National Standard Institute's document A117.1-1980, except as noted in this text by italics. However, the requirements in sections 4.1.1 through 4.1.7 and the special application sections are different from ANSI A117.1-1980 in their entirety and are printed in standard type.

The illustrations and text of ANSI A117.1-1980 are reproduced with permission from the American National Standards Institute. Copies of the standard may be purchased from the American National Standards Institute at 1430 Broadway, New York, New York 10018.

Paragraphs marked with an asterisk have related, nonmandatory material in the Appendix. In the Appendix, the corresponding paragraph numbers are preceded by an A.

2. GENERAL.

2.1 Provisions for Adults and Children. *The specifications in these guidelines are based upon adult dimensions and anthropometrics. These guidelines also contain alternate specifications based on children's dimensions and anthropometrics for drinking fountains, water closets, toilet stalls, lavatories, sinks, and fixed or built-in seating and tables.*

2.2* Equivalent Facilitation. *Departures from particular technical and scoping requirements of this guideline by the use of other designs and technologies are permitted where the alternative designs and technologies used will provide substantially equivalent or greater access to and usability of the facility.*

TABLE 1
Graphic Conventions

Convention	Description
36 / 915	Typical dimension line showing U.S. customary units (in inches) above the line and SI units (in millimeters) below
9 / 230	Dimensions for short distances indicated on extended line
9 / 230 36 / 915	Dimension line showing alternate dimensions required
⇦	Direction of approach
max	Maximum
min	Minimum
▪▪▪▪▪▪▪▪▪▪▪▪▪▪▪▪▪▪▪▪	Boundary of clear floor area
— — — — — — ℄	Centerline

4.13.12* Automatic Doors and Power-Assisted Doors. If an automatic door is used, then it shall comply with *ANSI/BHMA A156.10-1985.* Slowly opening, low-powered, automatic doors shall *comply with ANSI A156.19-1984.* Such doors shall not open to back check faster than 3 seconds and shall require no more than 15 lbf (66.6N) to stop door movement. If a power-assisted door is used, its door-opening force shall comply with 4.13.11 and its closing shall conform to the requirements in *ANSI A156.19-1984.*

4.14 Entrances.

4.14.1 Minimum Number. *Entrances required to be accessible by 4.1* shall be part of an accessible route complying with 4.3. Such entrances shall be connected by an accessible route to public transportation stops, to accessible parking and passenger loading zones, and to public streets or sidewalks if available (see 4.3.2(1)). They shall also be connected by an accessible route to all accessible spaces or elements within the building or facility.

4.14.2 Service Entrances. A service entrance shall not be the sole accessible entrance unless it is the only entrance to a building or facility (for example, in a factory or garage).

4.15 Drinking Fountains and Water Coolers.

4.15.1 Minimum Number. *Drinking fountains or water coolers required to be accessible by 4.1* shall comply with 4.15.

4.15.2* Spout Height. Spouts shall be no higher than 36 in (915 mm), measured from the floor or ground surfaces to the spout outlet (see Fig. 27(a)).

4.15.3 Spout Location. The spouts of drinking fountains and water coolers shall be at the front of the unit and shall direct the water flow in a trajectory that is parallel or nearly parallel to the front of the unit. The spout shall provide a flow of water at least 4 in (100 mm) high so as to allow the insertion of a cup or glass under the flow of water. *On an accessible drinking fountain with a round or oval bowl, the spout must be positioned so the flow of water is within 3 in (75 mm) of the front edge of the fountain.*

4.15.4 Controls. Controls shall comply with 4.27.4. *Unit controls shall be front mounted or side mounted near the front edge.*

4.15.5 Clearances.

(1) Wall- and post-mounted cantilevered units shall have a clear knee space between the bottom of the apron and the floor or ground at least 27 in (685 mm) high, 30 in (760 mm) wide, and 17 in to 19 in (430 mm to 485 mm) deep (see Fig. 27(a) and (b)). Such units shall also have a minimum clear floor space 30 in by 48 in (760 mm by 1220 mm) to allow a person in a wheelchair to approach the unit facing forward.

EXCEPTION: These clearances shall not be required at units used primarily by children ages 12 and younger where clear floor space for a parallel approach complying with 4.2.4 is provided and where the spout is no higher than 30 in (760 mm), measured from the floor or ground surface to the spout outlet.

(2) Free-standing or built-in units not having a clear space under them shall have a clear floor space at least 30 in by 48 in (760 mm by 1220 mm) that allows a person in a wheelchair to make a parallel approach to the unit (see Fig. 27(c) and (d)). This clear floor space shall comply with 4.2.4.

4.16 Water Closets.

4.16.1 General. Accessible water closets shall comply with *4.16.2 through 4.16.6.*

EXCEPTION: Water closets used primarily by children ages 12 and younger shall be permitted to comply with 4.16.7.

4.16.2 Clear Floor Space. Clear floor space for water closets not in stalls shall comply with Fig. 28. Clear floor space may be arranged to allow either a left-handed or right-handed approach.

4.16.3* Height. The height of water closets shall be 17 in to 19 in (430 mm to 485 mm), measured to the top of the toilet seat (see Fig. 29(b)). *Seats shall not be sprung to return to a lifted position.*

4.16.4* Grab Bars. Grab bars for water closets not located in stalls shall comply with 4.26 and Fig. 29. *The grab bar behind the water closet shall be 36 in (915 mm) minimum.*

4.16.5* Flush Controls. Flush controls shall be hand operated *or automatic* and shall comply with 4.27.4. Controls for flush valves shall be mounted on the wide side of toilet areas no more than 44 in (1120 mm) above the floor.

4.16.6 Dispensers. Toilet paper dispensers shall be installed within reach, as shown in Fig. 29(b). *Dispensers that control delivery, or that do not permit continuous paper flow, shall not be used.*

4.16.7* Water Closets for Children. *Water closets used primarily by children ages 12 and younger shall comply with 4.16.7 as permitted by 4.16.1.*

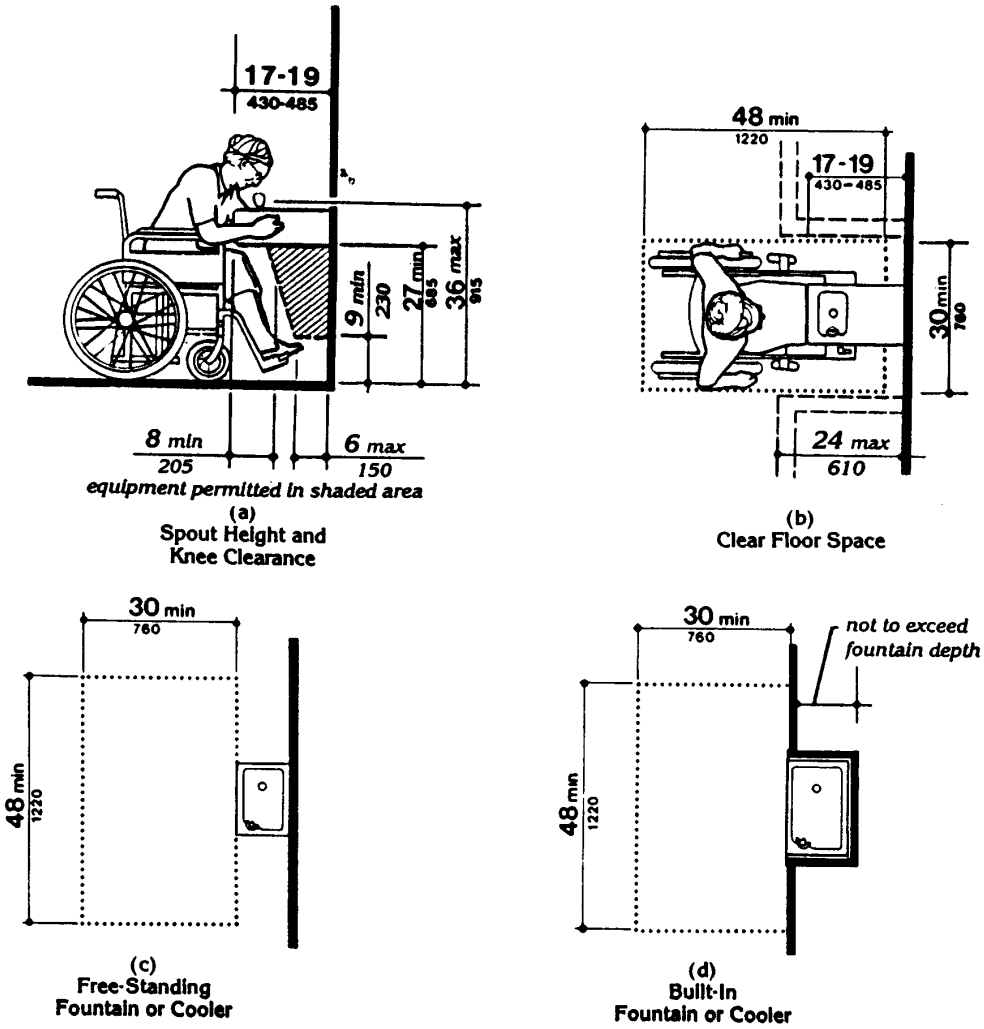

Fig. 27
Drinking Fountains and Water Coolers

4.17 Toilet Stalls

(1) Clear Floor Space. Clear floor space for water closets not in stalls shall comply with Fig. 28 except that the centerline of water closets shall be 12 in minimum to 18 in maximum (305 mm to 455 mm) from the side wall or partition. Clear floor space may be arranged to allow either a left- or right-hand approach.

(2) Height. The height of water closets shall be 11 in minimum to 17 in maximum (280 mm to 430 mm), measured to the top of the toilet seat. Seats shall not be sprung to return to a lifted position.

(3) Grab Bars. Grab bars for water closets not located in stalls shall comply with 4.26 and Fig. 29 except that grab bars shall be mounted 18 in minimum to 27 in maximum (455 mm to 685 mm) above the finish floor measured to the grab bar centerline. The grab bar behind the water closet shall be 36 in (915 mm) minimum.

EXCEPTION: If administrative authorities require flush controls for flush valves to be located in a position that conflicts with the location of the rear grab bar, then that grab bar may be split or, at water closets with a centerline placement below 15 in (380 mm), a rear grab bar 24 in (610 mm) minimum on the open side of the toilet area shall be permitted.

(4) Flush Controls. Flush controls shall be hand operated or automatic and shall comply with 4.27.4. Controls for flush valves shall be mounted on the wide side of the toilet area no more than 36 in (915 mm) above the floor.

(5) Dispensers. Toilet paper dispensers shall be installed 14 in minimum to 19 in maximum (355 mm to 485 mm) above the finish floor measured to the dispenser centerline. Dispensers that control delivery, or that do not permit continuous paper flow, shall not be used.

4.17 Toilet Stalls.

4.17.1 Location. Accessible toilet stalls shall be on an accessible route and shall meet the requirements of *4.17.2 through 4.17.6.*

EXCEPTION: Toilet stalls used primarily by children ages 12 and younger shall be permitted to comply with 4.17.7.

4.17.2 Water Closets. Water closets in accessible stalls shall comply with 4.16.

4.17 Toilet Stalls

stall and any obstruction may be reduced to a minimum of 42 in (1065 mm) (Fig. 30).

4.17.6 Grab Bars. Grab bars complying with the length and positioning shown in Fig. 30(a), (b), (c), and (d) shall be provided. Grab bars may be mounted with any desired method as long as they have a gripping surface at the locations shown and do not obstruct the required clear floor area. Grab bars shall comply with 4.26.

4.17.7* Toilet Stalls for Children. *Toilet stalls used primarily by children ages 12 and younger shall comply with 4.17.7 as permitted by 4.17.1.*

(1) Water Closets. Water closets in accessible stalls shall comply with 4.16.7.

(2) Size and Arrangement. The size and arrangement of the standard toilet stall shall comply with 4.17.3 and Fig. 30(a), Standard Stall, except that the centerline of water closets shall be 12 in minimum to 18 in maximum (305 mm to 455 mm) from the side wall or partition and the minimum depth for stalls with wall-mounted water closets shall be 59 in (1500 mm). Alternate stalls complying with Fig. 30(b) may be provided where permitted by 4.17.3 except that the stall shall have a minimum depth of 69 in (1745 mm) where wall-mounted water closets are provided.

(3) Toe Clearances. In standard stalls, the front partition and at least one side partition shall provide a toe clearance of at least 12 in (305 mm) above the finish floor.

(4) Doors. Toilet stall doors shall comply with 4.17.5.

(5) Grab Bars. Grab bars shall comply with 4.17.6 and the length and positioning shown in Fig. 30(a), (b), (c), and (d) except that grab bars shall be mounted 18 in minimum to 27 in maximum (455 mm to 685 mm) above the finish floor measured to the grab bar centerline.

EXCEPTION: If administrative authorities require flush controls for flush valves to be located in a position that conflicts with the location of the rear grab bar, then that grab bar may be split or, at water closets with a centerline placement below 15 in (380 mm), a rear grab bar 24 in (610 mm) minimum on the open side of the toilet area shall be permitted.

4.18 Urinals.

4.18.1 General. Accessible urinals shall comply with 4.18.

4.18.2 Height. Urinals shall be stall-type or wall-hung with an elongated rim at a maximum of 17 in (430 mm) above the finish floor.

4.18.3 Clear Floor Space. A clear floor space 30 in by 48 in (760 mm by 1220 mm) shall be provided in front of urinals to allow forward approach. This clear space shall adjoin or overlap an accessible route and shall

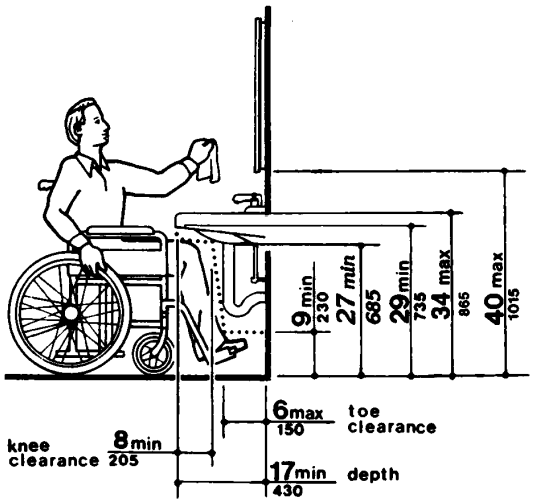

Fig. 31
Lavatory Clearances

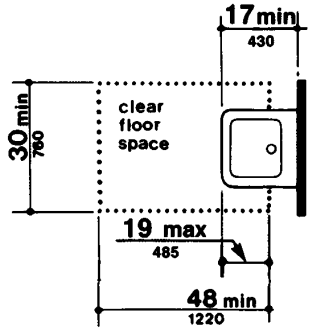

Fig. 32
Clear Floor Space at Lavatories

comply with 4.2.4. *Urinal shields that do not extend beyond the front edge of the urinal rim may be provided with 29 in (735 mm) clearance between them.*

4.18.4 Flush Controls. Flush controls shall be hand operated or automatic, and shall comply with 4.27.4, and shall be mounted no more than 44 in (1120 mm) above the finish floor.

4.19 Lavatories and Mirrors.

4.19.1 General. The requirements of 4.19 shall apply to lavatory fixtures, vanities, and built-in lavatories.

4.19.2 Height and Clearances. Lavatories shall be mounted with *the rim or counter surface no higher than 34 in (865 mm) above the finish floor.* Provide a clearance of at least 29 in (735 mm) above the finish floor to the bottom of the apron. Knee and toe clearance shall comply with Fig. 31.

EXCEPTION 1: Lavatories used primarily by children ages 6 through 12 shall be permitted to have an apron clearance and a knee clearance 24 in (610 mm) high minimum provided that the rim or counter surface is no higher than 31 in (760 mm).

EXCEPTION 2: Lavatories used primarily by children ages 5 and younger shall not be required to meet these clearances if clear floor space for a parallel approach complying with 4.2.4 is provided.

4.19.3 Clear Floor Space. A clear floor space 30 in by 48 in (760 mm by 1220 mm) complying with 4.2.4 shall be provided in front of a lavatory to allow forward approach. Such clear floor space shall adjoin or overlap an accessible route and shall extend a maximum of 19 in (485 mm) underneath the lavatory (see Fig. 32).

4.19.4 Exposed Pipes and Surfaces. Hot water and drain pipes under lavatories shall be insulated or otherwise *configured to protect against contact.* There shall be no sharp or abrasive surfaces under lavatories.

4.19.5 Faucets. Faucets shall comply with 4.27.4. Lever-operated, push-type, and electronically controlled mechanisms are examples of acceptable designs. *If* self-closing valves are

space complying with 4.2.3 shall be provided within an accessible bathroom. The clear floor spaces at fixtures and controls, the accessible route, and the turning space may overlap.

4.23.4 Water Closets. If toilet stalls are provided, then at least one shall be a standard toilet stall complying with 4.17; *where 6 or more stalls are provided, in addition to the stall complying with 4.17.3, at least one stall 36 in (915 mm) wide with an outward swinging, self-closing door and parallel grab bars complying with Fig. 30(d) and 4.26 shall be provided. Water closets in such stalls* shall comply with 4.16. If water closets are not in stalls, then at least one shall comply with 4.16.

4.23.5 Urinals. If urinals are provided, then at least one shall comply with 4.18.

4.23.6 Lavatories and Mirrors. If lavatories and mirrors are provided, then at least one of each shall comply with 4.19.

4.23.7 Controls and Dispensers. If controls, dispensers, receptacles, or other equipment *are* provided, *then* at least one of each shall be on an accessible route and shall comply with 4.27.

4.23.8 Bathing and Shower Facilities. If tubs or showers are provided, then at least one accessible tub that complies with 4.20 or at least one accessible shower that complies with 4.21 shall be provided.

4.23.9* Medicine Cabinets. If medicine cabinets are provided, at least one shall be located with a usable shelf no higher than 44 in (1120 mm) above the floor space. The floor space shall comply with 4.2.4.

4.24 Sinks.

4.24.1 General. Sinks *required to be accessible by 4.1* shall comply with 4.24.

4.24.2 Height. Sinks shall be mounted with the counter or rim no higher than 34 in (865 mm) *above the finish* floor.

4.24.3 Knee Clearance. Knee clearance that is at least 27 in (685 mm) high, 30 in (760 mm) wide, and 19 in (485 mm) deep shall be provided underneath sinks.

EXCEPTION 1: Sinks used primarily by children ages 6 through 12 shall be permitted to have a knee clearance 24 in (610 mm) high minimum provided that the rim or counter surface is no higher than 31 in (760 mm).

EXCEPTION 2: Sinks used primarily by children ages 5 and younger shall not be required to provide knee clearance if clear floor space for a parallel approach complying with 4.2.4 is provided.

4.24.4 Depth. Each sink shall be a maximum of 6-1/2 in (165 mm) deep.

4.24.5 Clear Floor Space. A clear floor space at least 30 in by 48 in (760 mm by 1220 mm) complying with 4.2.4 shall be provided in front of a sink to allow forward approach. The clear floor space shall be on an accessible route and shall extend a maximum of 19 in (485 mm) underneath the sink (see Fig. 32).

4.24.6 Exposed Pipes and Surfaces. Hot water and drain pipes exposed under sinks shall be insulated or otherwise *configured so as to protect against contact.* There shall be no sharp or abrasive surfaces under sinks.

4.24.7 Faucets. Faucets shall comply with 4.27.4. Lever-operated, push-type, touch-type, or electronically controlled mechanisms are acceptable designs.

4.25 Storage.

4.25.1 General. *Fixed* storage facilities such as cabinets, shelves, closets, and drawers *required to be accessible by 4.1* shall comply with 4.25.

4.25.2 Clear Floor Space. A clear floor space at least 30 in by 48 in (760 mm by 1220 mm) complying with 4.2.4 that allows either a forward or parallel approach by a person using a wheelchair shall be provided at accessible storage facilities.

4.25.3* Height. Accessible storage spaces shall be within at least one of the reach ranges specified in 4.2.5 and 4.2.6 *(see Fig. 5 and Fig. 6).* Clothes rods or shelves shall be a maximum of 54 in (1370 mm) *above the finish floor for a side approach. Where the distance from the wheelchair to the clothes rod or shelf exceeds 10 in (255 mm) (as in closets without*

4.26 Handrails, Grab Bars, and Tub and Shower Seats

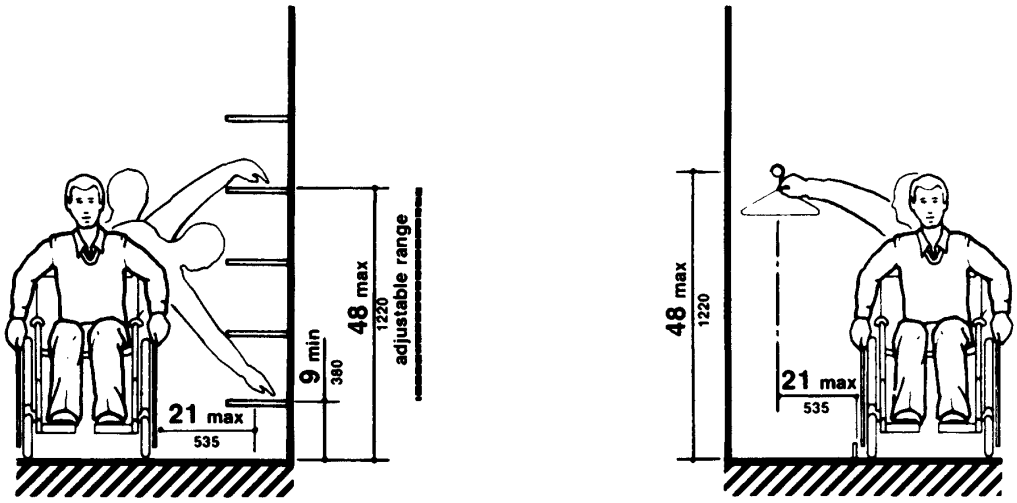

Fig. 38
Storage Shelves and Closets

accessible doors) the height and depth to the rod or shelf shall comply with Fig. 38(a) and Fig. 38(b).

4.25.4 Hardware. Hardware for accessible storage facilities shall comply with 4.27.4. Touch latches and U-shaped pulls are acceptable.

4.26 Handrails, Grab Bars, and Tub and Shower Seats.

4.26.1* General. All handrails, grab bars, and tub and shower seats *required to be accessible by 4.1, 4.8, 4.9, 4.16, 4.17, 4.20 or 4.21* shall comply with 4.26.

4.26.2* Size and Spacing of Grab Bars and Handrails. The diameter or width of the gripping surfaces of a handrail or grab bar shall be 1-1/4 in to 1-1/2 in (32 mm to 38 mm), or the shape shall provide an equivalent gripping surface. If handrails or grab bars are mounted adjacent to a wall, the space between the wall and the grab bar shall be 1-1/2 in (38 mm) (see Fig. 39(a), (b), (c), and *(e)*). Handrails may be located in a recess if the recess is a maximum of 3 in (75 mm) deep and extends at least 18 in (455 mm) above the top of the rail (see Fig. 39(d)).

4.26.3 Structural Strength. The structural strength of grab bars, tub and shower seats, fasteners, and mounting devices shall meet the following specification:

(1) Bending stress in a grab bar or seat induced by the maximum bending moment from the application of 250 lbf (1112N) shall be less than the allowable stress for the material of the grab bar or seat.

(2) Shear stress induced in a grab bar or seat by the application of 250 lbf (1112N) shall be less than the allowable shear stress for the material of the grab bar or seat. If the connection between the grab bar or seat and its mounting bracket or other support is considered to be fully restrained, then direct and torsional shear stresses shall be totaled for the combined shear stress, which shall not exceed the allowable shear stress.

(3) Shear force induced in a fastener or mounting device from the application of 250 lbf (1112N) shall be less than the allowable lateral load of either the fastener or mounting device or the supporting structure, whichever is the smaller allowable load.

(4) Tensile force induced in a fastener by a direct tension force of 250 lbf (1112N) plus the maximum moment from the application of 250 lbf (1112N) shall be less than the allowable withdrawal load between the fastener and the supporting structure.

(5) Grab bars shall not rotate within their fittings.

4.32 *Fixed or Built-in* Seating and Tables

4.31.7 Telephone Books. Telephone books, if provided, shall be located *in a position that complies with the reach ranges specified in 4.2.5 and 4.2.6.*

4.31.8 Cord Length. The cord from the telephone to the handset shall be at least 29 in (735 mm) long.

4.31.9* Text Telephones (TTYs) Required by 4.1.

(1) Text telephones (TTYs) used with a pay telephone shall be permanently affixed within, or adjacent to, the telephone enclosure. If an acoustic coupler is used, the telephone cord shall be sufficiently long to allow connection of the text telephone (TTY) and the telephone receiver.

(2) Pay telephones designed to accommodate a portable text telephone (TTY) shall be equipped with a shelf and an electrical outlet within or adjacent to the telephone enclosure. The telephone handset shall be capable of being placed flush on the surface of the shelf. The shelf shall be capable of accommodating a text telephone (TTY) and shall have 6 in (152 mm) minimum vertical clearance in the area where the text telephone (TTY) is to be placed.

(3) Equivalent facilitation may be provided. For example, a portable text telephone (TTY) may be made available in a hotel at the registration desk if it is available on a 24-hour basis for use with nearby public pay telephones. In this instance, at least one pay telephone shall comply with paragraph 2 of this section. In addition, if an acoustic coupler is used, the telephone handset cord shall be sufficiently long so as to allow connection of the text telephone (TTY) and the telephone receiver. Directional signage shall be provided and shall comply with 4.30.7.

4.32 *Fixed* or *Built-in* Seating and Tables.

4.32.1 Minimum Number. Fixed or built-in seating or tables *required to be accessible by 4.1* shall comply with *4.32.2 through 4.32.4.*

EXCEPTION: Fixed or built-in seating or tables used primarily by children ages 12 and younger shall be permitted to comply with 4.32.5.

4.32.2 Seating. If seating spaces for people in wheelchairs are provided at *fixed* tables or counters, clear floor space complying with 4.2.4 shall be provided. Such clear floor space shall not overlap knee space by more than 19 in (485 mm) (see Fig. 45).

4.32.3 Knee Clearances. If seating for people in wheelchairs is provided at tables *or* counters, knee spaces at least 27 in (685 mm) high, 30 in (760 mm) wide, and 19 in (485 mm) deep shall be provided (see Fig. 45).

4.32.4* Height of Tables or Counters. The tops of *accessible* tables and *counters* shall be from 28 in to 34 in (710 mm to 865 mm) *above the finish* floor or ground.

4.32.5 Children's Fixed or Built-in Seating and Tables. *Fixed or built-in seating or tables used primarily by children ages 12 and younger shall comply with 4.32.5 as permitted by 4.32.1.*

EXCEPTION: Fixed or built-in seating or tables used primarily by children ages 5 and younger shall not be required to comply with 4.32.5 if clear floor space complying with 4.2.4 parallel to fixed tables or counters is provided.

(1) Seating. If seating spaces for people in wheelchairs are provided at fixed tables or counters, clear floor space complying with 4.2.4 shall be provided. Such clear floor space shall not overlap knee space by more than 19 in (485 mm) (see Fig. 45).

(2) Knee Clearances. If seating for people in wheelchairs is provided at tables or counters, knee spaces at least 24 in (610 mm) high, 30 in (760 mm) wide, and 19 in (485 mm) deep shall be provided (see Fig. 45).

(3) Height of Tables or Counters. The tops of accessible tables and counters shall be from 26 in to 30 in (660 mm to 760 mm) above the finish floor or ground.

4.33 Assembly Areas.

4.33.1 Minimum Number. Assembly *and associated* areas *required to be accessible by 4.1* shall comply with 4.33.

4.33.2* Size of Wheelchair Locations. Each wheelchair location shall provide minimum clear ground or floor spaces as shown in Fig. 46.

4.33.3* Placement of Wheelchair Locations. Wheelchair areas shall be an integral part of any fixed seating plan and shall be *provided so as to provide people with physical disabilities a choice of admission prices and lines of sight comparable to those for members of the general public.* They shall adjoin an accessible route that also serves as a means of egress in case of emergency. *At least one companion fixed seat shall be provided next to each wheelchair seating area. When the seating capacity exceeds 300, wheelchair spaces shall be provided in more than one location. Readily removable seats may be installed in wheelchair spaces when the spaces are not required to accommodate wheelchair users.*

EXCEPTION: Accessible viewing positions may be clustered for bleachers, balconies, and other areas having sight lines that require slopes of greater than 5 percent. Equivalent accessible viewing positions may be located on levels having accessible egress.

4.33.4 Surfaces. The ground or floor at wheelchair locations shall be level and shall comply with 4.5.

A4.2.3 Wheelchair Turning Space

semi-ambulatory person. There will be little leeway for swaying or missteps (see Fig. A1).

A4.2.3 Wheelchair Turning Space. *These guidelines specify* a minimum space of 60 in (1525 mm) diameter *or a 60 in by 60 in (1525 mm by 1525 mm) T-shaped space* for a pivoting 180-degree turn of a wheelchair. This space is usually satisfactory for turning around, but many people will not be able to turn without repeated tries and bumping into surrounding objects. The space shown in Fig. A2 will allow most wheelchair users to complete U-turns without difficulty.

A4.2.4 Clear Floor or Ground Space for Wheelchairs. The wheelchair and user shown in Fig. A3 represent typical dimensions for a large adult male. The space requirements in this *guideline* are based upon maneuvering clearances that will accommodate most wheelchairs. Fig. A3 provides a uniform reference for design not covered by this *guideline.*

A4.2.5 & A4.2.6 Reach. *Reach ranges for persons seated in wheelchairs may be further clarified in Fig. A3(a). These drawings approximate in the plan view the information shown in Fig. 4, 5, and 6.*

The following table provides guidance on reach ranges for children according to age where building elements such as coat hooks, lockers, or controls and operating mechanisms are designed for use primarily by children. These dimensions apply to either forward or side reaches. Accessible elements, controls, and operating mechanisms designed for adult use or children over age 12 can be located outside these ranges but must be within the adult reach ranges required by 4.2.5 and 4.2.6.

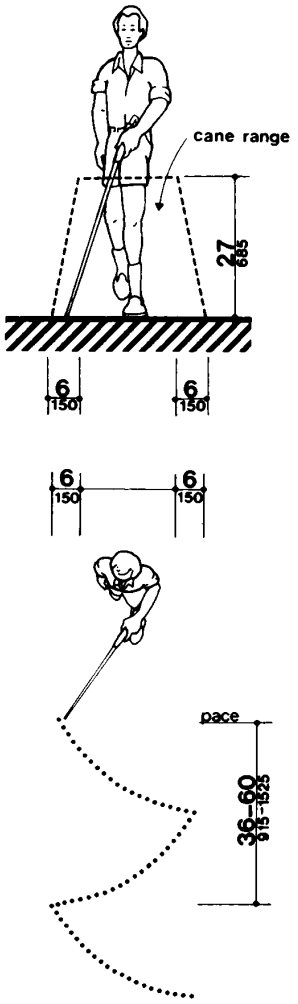

Fig A4
Care Technique

Children's Reach Ranges

Forward or Side Reach	*Ages 3 and 4*	*Ages 5 through 8*	*Ages 9 through 12*
High (maximum)	*36 in (915 mm)*	*40 in (1015 mm)*	*44 in (1120 mm)*
Low (minimum)	*20 in (510 mm)*	*18 in (455 mm)*	*16 in (405 mm)*

A4.3 Accessible Route.

A4.3.1 General.

(1) Travel Distances. Many people with mobility impairments can move at only very slow speeds; for many, traveling 200 ft (61 m) could take about 2 minutes. This assumes a rate of about 1.5 ft/s (455 mm/s) on level ground. It also assumes that the traveler would move continuously. However, on trips over 100 ft (30 m), disabled people are apt to rest frequently, which substantially increases their trip times. Resting periods of 2 minutes for every 100 ft (30 m) can be used to estimate travel times for people with severely limited stamina. In inclement weather, slow progress and resting can greatly increase a disabled person's exposure to the elements.

(2) Sites. Level, indirect routes or those with running slopes lower than 1:20 can sometimes provide more convenience than direct routes with maximum allowable slopes or with ramps.

A4.3.10 Egress. Because people with disabilities may visit, be employed or be a resident in any building, emergency management plans with specific provisions to ensure their safe evacuation also play an essential role in fire safety and life safety.

A4.3.11.3 Stairway Width. *A 48 in (1220 mm) wide exit stairway is needed to allow assisted evacuation (e.g., carrying a person in a wheelchair) without encroaching on the exit path for ambulatory persons.*

advantage to this design is that no additional signage is needed because all spaces can accommodate a van with a side-mounted lift or ramp. Also, there is no competition between cars and vans for spaces since all spaces can accommodate either. Furthermore, the wider space permits vehicles to park to one side or the other within the 132 in (3350 mm) space to allow persons to exit and enter the vehicle on either the driver or passenger side, although, in some cases, this would require exiting or entering without a marked access aisle.

An essential consideration for any design is having the access aisle level with the parking space. Since a person with a disability, using a lift or ramp, must maneuver within the access aisle, the aisle cannot include a ramp or sloped area. The access aisle must be connected to an accessible route to the appropriate accessible entrance of a building or facility. The parking access aisle must either blend with the accessible route or have a curb ramp complying with 4.7. Such a curb ramp opening must be located within the access aisle boundaries, not within the parking space boundaries. Unfortunately, many facilities are designed with a ramp that is blocked when any vehicle parks in the accessible space. Also, the required dimensions of the access aisle cannot be restricted by planters, curbs or wheel stops.

A4.6.4 Signage. Signs designating parking places for disabled people can be seen from a driver's seat if the signs are mounted high enough above the ground and located at the front of a parking space.

A4.6.5 Vertical Clearance. High-top vans, which disabled people or transportation services often use, require higher clearances in parking garages than automobiles.

A4.8 Ramps.

A4.8.1 General. Ramps are essential for wheelchair users if elevators or lifts are not available to connect different levels. However, some people who use walking aids have difficulty with ramps and prefer stairs.

A4.8.2 Slope and Rise. *Ramp slopes between 1:16 and 1:20 are preferred.* The ability to manage an incline is related to both its slope and its length. Wheelchair users with disabilities affecting *their* arms or with low stamina have serious difficulty using inclines. Most ambulatory people and most people who use wheelchairs can manage a slope of 1:16. Many people cannot manage a slope of 1:12 for 30 ft (9 m).

A4.8.4 Landings. *Level landings are essential toward maintaining an aggregate slope that complies with these guidelines. A ramp landing that is not level causes individuals using wheelchairs to tip backward or bottom out when the ramp is approached.*

A4.8.5 Handrails. The requirements for stair and ramp handrails in this *guideline* are for adults. When children are principal users in a building or facility (e.g. elementary schools), a second set of handrails at an appropriate height can assist then and aid in preventing accidents. *A maximum height of 28 inches measured to the top of the gripping surface from the ramp surface or stair nosing is recommended for handrails designed for children. Sufficient vertical clearance between upper and lower handrails (9 inches minimum) should be provided to help prevent entrapment.*

A4.9 Stairs.

A4.9.1 Minimum Number. *Only interior and exterior stairs connecting levels that are not connected by an elevator, ramp, or other accessible means of vertical access have to comply with 4.9.*

A4.9.5 Handrails. *See A4.8.5.*

A4.10 Elevators.

A4.10.6 Door Protective and Reopening Device. The required door reopening device would hold the door open for 20 seconds if the doorway remains obstructed. After 20 seconds, the door may begin to close. However, if designed in accordance with *ASME A17.1-1990*, the door closing movement could still be stopped if a person or object exerts sufficient force at any point on the door edge.

A4.10.7 Door and Signal Timing for Hall Calls. This paragraph allows variation in the location of call buttons, advance time for warning signals, and the door-holding period used to meet the time requirement.

A4.10.12 Car Controls. Industry-wide standardization of elevator control panel design would make all elevators significantly more convenient for use by people with severe visual impairments. In many cases, it will be possible to locate the highest control on elevator panels within 48 in (1220 mm) from the floor.

A4.16 Water Closets

A4.16 Water Closets.

A4.16.3 Height. Height preferences for toilet seats vary considerably among disabled people. Higher seat heights may be an advantage to some ambulatory disabled people, but are often a disadvantage for wheelchair users and others. Toilet seats 18 in (455 mm) high seem to be a reasonable compromise. Thick seats and filler rings are available to adapt standard fixtures to these requirements.

A4.16.4 Grab Bars. Fig. A6(a) and (b) show the diagonal and side approaches most commonly used to transfer from a wheelchair to a water closet. Some wheelchair users can transfer from the front of the toilet while others use a 90-degree approach. Most people who use the two additional approaches can also use either the diagonal approach or the side approach.

A4.16.5 Flush Controls. Flush valves and related plumbing can be located behind walls or to the side of the toilet, or a toilet seat lid can be provided if plumbing fittings are directly behind the toilet seat. Such designs reduce the chance of injury and imbalance caused by leaning back against the fittings. Flush controls for tank-type toilets have a standardized mounting location on the left side of the tank (facing the tank). Tanks can be obtained by special order with controls mounted on the right side. If administrative authorities require flush controls for flush valves to be located in a position that conflicts with the location of the rear grab bar, then that bar may be split or shifted toward the wide side of the toilet area.

A4.16.7 Water Closets for Children. *The requirements in 4.16.7 are to be followed where the exception for children's water closets in 4.16.1 is utilized. Use of this exception is optional since these guidelines do not require water closets or other building elements to be designed according to children's dimensions. The following table provides additional guidance in applying the specifications for water closets for children according to the age group served and reflects the differences in the size, stature, and reach ranges of children 3 through 12. The specifications chosen should correspond to the age of the primary user group. The specifications of one age group should be applied consistently in the installation of a water closet and related elements.*

A4.17 Toilet Stalls.

A4.17.3 Size and Arrangement. *This section requires use of the 60 in (1525 mm) standard stall (Figure 30(a)) and permits the 36 in (915 mm) or 48 in (1220 mm) wide alternate stall (Figure 30(b)) only in alterations where provision of the standard stall is technically infeasible or where local plumbing codes prohibit reduction in the number of fixtures. A standard stall provides a clear space on one side of the water closet to enable persons who use wheelchairs to perform a side or diagonal transfer from the wheelchair to the water*

Specifications for Water Closets Serving Children Ages 3 through 12

	Ages 3 and 4	*Ages 5 through 8*	*Ages 9 through 12*
(1) Water Closet Centerline	*12 in (305 mm)*	*12 to 15 in (305 to 380 mm)*	*15 to 18 in (380 to 455 mm)*
(2) Toilet Seat Height	*11 to 12 in (280 to 305 mm)*	*12 to 15 in (305 to 380 mm)*	*15 to 17 in (380 to 430 mm)*
(3) Grab Bar Height	*18 to 20 in (455 to 510 mm)*	*20 to 25 in (510 to 635 mm)*	*25 to 27 in (635 to 685 mm)*
(4) Dispenser Height	*14 in (355 mm)*	*14 to 17 in (355 to 430 mm)*	*17 to 19 in (430 to 485 mm)*

closet. However, some persons with disabilities who use mobility aids such as walkers, canes or crutches are better able to use the two parallel grab bars in the 36 in (915 mm) wide alternate stall to achieve a standing position.

In large toilet rooms, where six or more toilet stalls are provided, it is therefore required that a 36 in (915 mm) wide stall with parallel grab bars be provided in addition to the standard stall required in new construction. The 36 in (915 mm) width is necessary to achieve proper use of the grab bars; wider stalls would position the grab bars too far apart to be easily used and narrower stalls would position the grab bars too close to the water closet. Since the stall is primarily intended for use by persons using canes, crutches and walkers, rather than wheelchairs, the length of the stall could be conventional. The door, however, must swing outward to ensure a usable space for people who use crutches or walkers.

A4.17.5 Doors. To make it easier for wheelchair users to close toilet stall doors, doors can be provided with closers, spring hinges, or a pull bar mounted on the inside surface of the door near the hinge side.

A4.17.7 Toilet Stalls for Children. *See A4.16.7.*

A4.19 Lavatories and Mirrors.

A4.19.6 Mirrors. If mirrors are to be used by both ambulatory people and wheelchair users, then they must be at least 74 in (1880 mm) high at their topmost edge. A single full length mirror can accommodate all people, including children. *Clear floor space for a forward approach 30 by 48 inches (760 mm by 1220 mm) should be provided in front of full length mirrors. Doors should not swing into this clear floor space. Mirrors provided above lavatories designed for children should be mounted with the bottom edge of the reflecting surface no higher than 34 inches (865 mm) above the finish floor or at the lowest mounting height permitted by fixtures and related elements.*

A4.21 Shower Stalls.

A4.21.1 General. Shower stalls that are 36 in by 36 in (915 mm by 915 mm) wide provide additional safety to people who have difficulty maintaining balance because all grab bars and walls are within easy reach. Seated people use

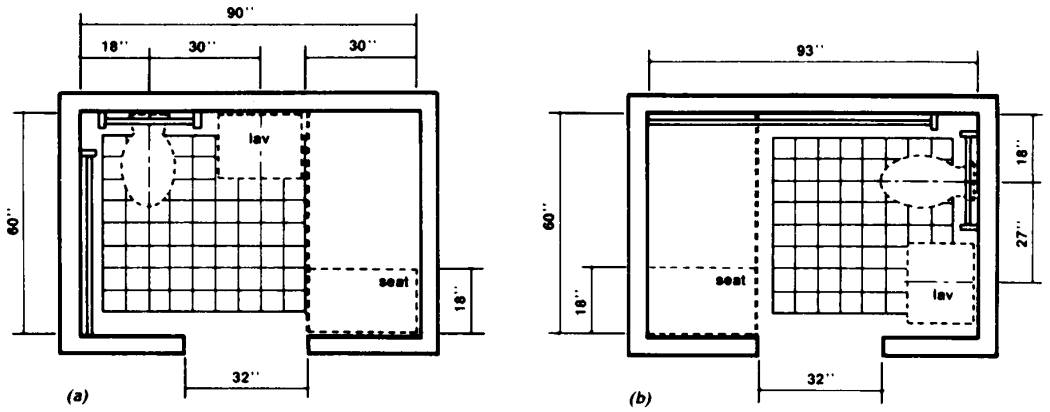

Fig. A7

the walls of 36 in by 36 in (915 mm by 915 mm) showers for back support. Shower stalls that are 60 in (1525 mm) wide and have no curb may increase usability of a bathroom by wheelchair users because the shower area provides additional maneuvering space.

A4.22 Toilet Rooms.

A4.22.3 Clear Floor Space. *In many small facilities, single-user restrooms may be the only facilities provided for all building users. In addition, the guidelines allow the use of "unisex" or "family" accessible toilet rooms in alterations when technical infeasibility can be demonstrated. Experience has shown that the provision of accessible "unisex" or single-user restrooms is a reasonable way to provide access for wheelchair users and any attendants, especially when attendants are of the opposite sex. Since these facilities have proven so useful, it is often considered advantageous to install a "unisex" toilet room in new facilities in addition to making the multi-stall restrooms accessible, especially in shopping malls, large auditoriums, and convention centers.*

Figure 28 (section 4.16) provides minimum clear floor space dimensions for toilets in accessible "unisex" toilet rooms. The dotted lines designate the minimum clear floor space, depending on the direction of approach, required for wheelchair users to transfer onto the water closet. The dimensions of 48 in (1220 mm) and 60 in (1525 mm), respectively, correspond to the space required for the two common transfer approaches utilized by wheelchair users (see Fig. A6). It is important to keep in mind that the placement of the lavatory to the immediate side of the water closet will preclude the side approach transfer illustrated in Figure A6(b). To accommodate the side transfer, the space adjacent to the water closet must remain clear of obstruction for 42 in (1065 mm) from the centerline of the toilet (Figure 28) and the lavatory must not be located within this clear space. A turning circle or T-turn, the clear floor space at the lavatory, and maneuvering space at the door must be considered when determining the possible wall locations. A privacy latch or other accessible means of ensuring privacy during use should be provided at the door.

RECOMMENDATIONS:

1. In new construction, accessible single-user restrooms may be desirable in some situations because they can accommodate a wide variety of building users. However, they cannot be used in lieu of making the multi-stall toilet rooms accessible as required.

2. Where strict compliance to the guidelines for accessible toilet facilities is technically infeasible in the alteration of existing facilities, accessible "unisex" toilets are a reasonable alternative.

3. In designing accessible single-user restrooms, the provisions of adequate space to allow a side transfer will provide accommodation to the largest number of wheelchair users.

A4.23 Bathrooms, Bathing Facilities, and Shower Rooms.

A4.23.3 Clear Floor Space. *Figure A7 shows two possible configurations of a toilet room with a roll-in shower. The specific shower shown is designed to fit exactly within the dimensions of a standard bathtub. Since the shower does not have a lip, the floor space can be used for required maneuvering space. This would permit a toilet room to be smaller than would be permitted with a bathtub and still provide enough floor space to be considered accessible. This design can provide accessibility in facilities where space is at a premium (i.e., hotels and medical care facilities). The alternate roll-in shower (Fig. 57b) also provides sufficient room for the "T-turn" and does not require plumbing to be on more than one wall.*

A4.23.9 Medicine Cabinets. Other alternatives for storing medical and personal care items are very useful to disabled people. Shelves, drawers, and floor-mounted cabinets can be provided within the reach ranges of disabled people.

A4.25.3 Height. *For guidance on children's reach ranges, see A4.2.5 & 4.2.6.*

A4.26 Handrails, Grab Bars, and Tub and Shower Seats.

A4.26.1 General. Many disabled people rely heavily upon grab bars and handrails to maintain balance and prevent serious falls. Many people brace their forearms between supports and walls to give them more leverage and stability in maintaining balance or for lifting. The grab bar clearance of 1-1/2 in (38 mm) required in this guideline is a safety

clearance to prevent injuries resulting from arms slipping through the openings. It also provides adequate gripping room.

A4.26.2 Size and Spacing of Grab Bars and Handrails. This specification allows for alternate shapes of handrails as long as they allow an opposing grip similar to that provided by a circular section of 1-1/4 in to 1-1/2 in (32 mm to 38 mm).

A4.27 Controls and Operating Mechanisms.

A4.27.3 Height. *Fig. A8 further illustrates mandatory and advisory control mounting height provisions for typical equipment.*

Electrical receptacles installed to serve individual appliances and not intended for regular or frequent use by building occupants are not required to be mounted within the specified reach ranges. Examples would be receptacles installed specifically for wall-mounted clocks, refrigerators, and microwave ovens. For guidance on children's reach ranges, see A4.2.5 & 4.2.6.

A4.28 Alarms.

A4.28.2 Audible Alarms. Audible emergency signals must have an intensity and frequency that can attract the attention of individuals who have partial hearing loss. People over 60 years of age generally have difficulty perceiving frequencies higher than 10,000 Hz. *An alarm signal which has a periodic element to its signal, such as single stroke bells (clang-pause- clang-pause), hi-low (up-down-up-down) and fast whoop (on-off-on-off) are best. Avoid continuous or reverberating tones. Select a signal which has a sound characterized by three or four clear tones without a great deal of "noise" in between.*

A4.28.3 Visual Alarms. The specifications in this section do not preclude the use of zoned or coded alarm systems.

A4.28.4 Auxiliary Alarms. Locating visual emergency alarms in rooms where persons who are deaf may work or reside alone can ensure that they will always be warned when an emergency alarm is activated. To be effective, such devices must be located and oriented

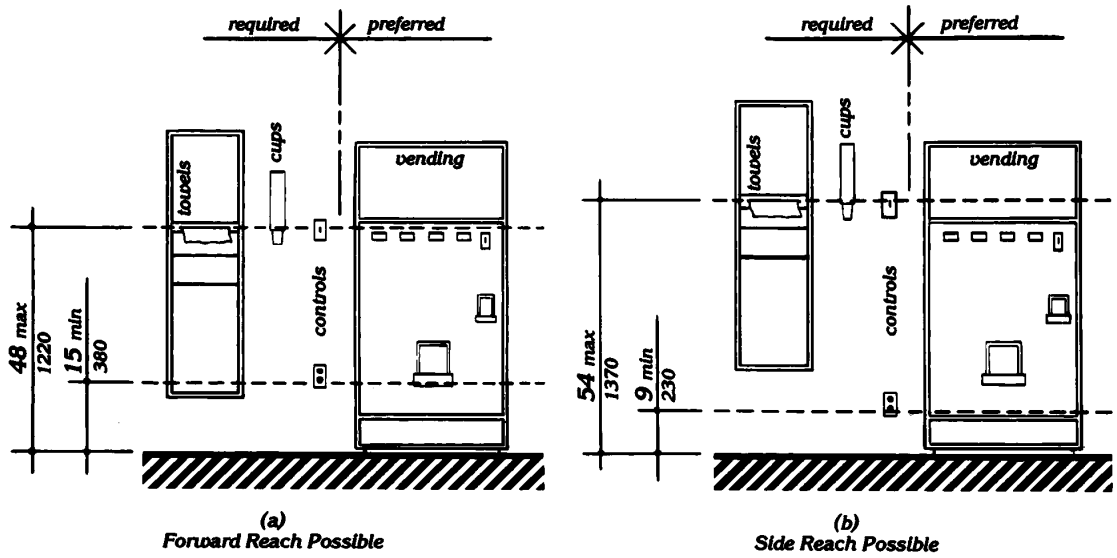

Fig. A8
Control Reach Limitations

so that they will spread signals and reflections throughout a space or raise the overall light level sharply. *However, visual alarms alone are not necessarily the best means to alert sleepers. A study conducted by Underwriters Laboratory (UL) concluded that a flashing light more than seven times brighter was required (110 candela v. 15 candela, at the same distance) to awaken sleepers as was needed to alert awake subjects in a normal daytime illuminated room.*

For hotel and other rooms where people are likely to be asleep, a signal-activated vibrator placed between mattress and box spring or under a pillow was found by UL to be much more effective in alerting sleepers. Many readily available devices are sound-activated so that they could respond to an alarm clock, clock radio, wake-up telephone call or room smoke detector. Activation by a building alarm system can either be accomplished by a separate circuit activating an auditory alarm which would, in turn, trigger the vibrator or by a signal transmitted through the ordinary 110-volt outlet. Transmission of signals through the power line is relatively simple and is the basis of common, inexpensive remote light control systems sold in many department and electronic stores for home use. So-called "wireless" intercoms operate on the same principal.

A4.29 Detectable Warnings.

A4.29.2 Detectable Warnings on Walking Surfaces. *The material used to provide contrast should contrast by at least 70%. Contrast in percent is determined by:*

$$Contrast = [(B_1 - B_2)/B_1] \times 100$$

where B_1 = light reflectance value (LRV) of the lighter area
and B_2 = light reflectance value (LRV) of the darker area.

Note that in any application both white and black are never absolute; thus, B_1 never equals 100 and B_2 is always greater than 0.

A4.30 Signage.

A4.30.1 General. In building complexes where finding locations independently on a routine basis may be a necessity (for example, college campuses), tactile maps or prerecorded instructions can be very helpful to visually impaired people. Several maps and auditory instructions have been developed and tested for specific applications. The type of map or instructions used must be based on the information to be communicated, which depends highly on the type of buildings or users.

Landmarks that can easily be distinguished by visually impaired individuals are useful as orientation cues. Such cues include changes in illumination level, bright colors, unique patterns, wall murals, location of special equipment or other architectural features.

Many people with disabilities have limitations in movement of their heads and reduced peripheral vision. Thus, signage positioned perpendicular to the path of travel is easiest for them to notice. People can generally distinguish signage within an angle of 30 degrees to either side of the centerlines of their faces without moving their heads.

A4.30.2 Character Proportion. The legibility of printed characters is a function of the viewing distance, character height, the ratio of the stroke width to the height of the character, the contrast of color between character and background, and print font. The size of characters must be based upon the intended viewing distance. A severely nearsighted person may have to be much closer to recognize a character of a given size than a person with normal visual acuity.

A4.30.4 Raised *and Brailled* Characters and *Pictorial Symbol Signs (Pictograms).* *The standard dimensions for literary Braille are as follows:*

Dot diameter	*.059 in.*
Inter-dot spacing	*.090 in.*
Horizontal separation between cells	*.241 in.*
Vertical separation between cells	*.395 in.*

Raised borders around *signs containing* raised characters may make them confusing to read unless the border is set far away from the characters. *Accessible signage with descriptive materials about public buildings, monuments, and objects of cultural interest may not provide sufficiently detailed and meaningful informa-*

A4.30.5 Finish and Contrast

tion. Interpretive guides, audio tape devices, or other methods may be more effective in presenting such information.

A4.30.5 Finish and Contrast. *An eggshell finish (11 to 19 degree gloss on 60 degree glossimeter) is recommended. Research indicates that signs are more legible for persons with low vision when characters contrast with their background by at least 70 percent. Contrast in percent shall be determined by:*

$$Contrast = [(B_1 - B_2)/B_1] \times 100$$

where B_1 = light reflectance value (LRV) of the lighter area
and B_2 = light reflectance value (LRV) of the darker area.

Note that in any application both white and black are never absolute; thus, B_1 never equals 100 and B_2 is always greater than 0.

The greatest readability is usually achieved through the use of light-colored characters or symbols on a dark background.

A4.30.7 Symbols of Accessibility for Different Types of Listening Systems. *Paragraph 4 of this section requires signage indicating the availability of an assistive listening system. An appropriate message should be displayed with the international symbol of access for hearing loss since this symbol conveys general accessibility for people with hearing loss. Some suggestions are:*

INFRARED
ASSISTIVE LISTENING SYSTEM
AVAILABLE
—PLEASE ASK—

AUDIO LOOP IN USE
TURN T-SWITCH FOR
BETTER HEARING
—OR ASK FOR HELP—

FM
ASSISTIVE LISTENING
SYSTEM AVAILABLE
—PLEASE ASK—

The symbol may be used to notify persons of the availability of other auxiliary aids and services such as: real time captioning, captioned note taking, sign language interpreters, and oral interpreters.

A4.30.8 Illumination Levels. *Illumination levels on the sign surface shall be in the 100 to 300 lux range (10 to 30 footcandles) and shall be uniform over the sign surface. Signs shall be located such that the illumination level on the surface of the sign is not significantly exceeded by the ambient light or visible bright lighting source behind or in front of the sign.*

A14A

[FR Doc. 98–616 Filed 1–12–98; 8:45 am]
BILLING CODE 8150–01–C