5–7–98
Vol. 63 No. 88
Pages 25153–25386

federal register

Thursday
May 7, 1998

Briefings on how to use the Federal Register
For information on briefings in Washington, DC, see announcement on the inside cover of this issue.

Now Available Online via
GPO Access

Free online access to the official editions of the *Federal Register, the Code of Federal Regulations* and other Federal Register publications is available on *GPO Access*, a service of the U.S. Government Printing Office at:

http://www.access.gpo.gov/nara/index.html

For additional information on ***GPO Access*** products, services and access methods, see page II or contact the *GPO Access* User Support Team via:

★ Phone: toll-free: 1-888-293-6498

★ Email: gpoaccess@gpo.gov

The **FEDERAL REGISTER** is published daily, Monday through Friday, except official holidays, by the Office of the Federal Register, National Archives and Records Administration, Washington, DC 20408, under the Federal Register Act (44 U.S.C. Ch. 15) and the regulations of the Administrative Committee of the Federal Register (1 CFR Ch. I). The Superintendent of Documents, U.S. Government Printing Office, Washington, DC 20402 is the exclusive distributor of the official edition.

The **Federal Register** provides a uniform system for making available to the public regulations and legal notices issued by Federal agencies. These include Presidential proclamations and Executive Orders, Federal agency documents having general applicability and legal effect, documents required to be published by act of Congress, and other Federal agency documents of public interest.

Documents are on file for public inspection in the Office of the Federal Register the day before they are published, unless the issuing agency requests earlier filing. For a list of documents currently on file for public inspection, see http://www.nara.gov/fedreg.

The seal of the National Archives and Records Administration authenticates the Federal Register as the official serial publication established under the Federal Register Act. Under 44 U.S.C. 1507, the contents of the **Federal Register** shall be judicially noticed.

The **Federal Register** is published in paper and on 24x microfiche. It is also available online at no charge as one of the databases on GPO Access, a service of the U.S. Government Printing Office.

The online edition of the **Federal Register** is issued under the authority of the Administrative Committee of the Federal Register as the official legal equivalent of the paper and microfiche editions (44 U.S.C. 4101 and 1 CFR 5.10). It is updated by 6 a.m. each day the **Federal Register** is published and it includes both text and graphics from Volume 59, Number 1 (January 2, 1994) forward.

GPO Access users can choose to retrieve online **Federal Register** documents as TEXT (ASCII text, graphics omitted), PDF (Adobe Portable Document Format, including full text and all graphics), or SUMMARY (abbreviated text) files. Users should carefully check retrieved material to ensure that documents were properly downloaded.

On the World Wide Web, connect to the **Federal Register** at http://www.access.gpo.gov/nara. Those without World Wide Web access can also connect with a local WAIS client, by Telnet to swais.access.gpo.gov, or by dialing (202) 512-1661 with a computer and modem. When using Telnet or modem, type swais, then log in as guest with no password.

For more information about GPO Access, contact the GPO Access User Support Team by E-mail at gpoaccess@gpo.gov; by fax at (202) 512–1262; or call (202) 512–1530 or 1–888–293–6498 (toll free) between 7 a.m. and 5 p.m. Eastern time, Monday–Friday, except Federal holidays.

The annual subscription price for the **Federal Register** paper edition is $555, or $607 for a combined **Federal Register,** Federal Register Index and List of CFR Sections Affected (LSA) subscription; the microfiche edition of the **Federal Register** including the Federal Register Index and LSA is $220. Six month subscriptions are available for one-half the annual rate. The charge for individual copies in paper form is $8.00 for each issue, or $8.00 for each group of pages as actually bound; or $1.50 for each issue in microfiche form. All prices include regular domestic postage and handling. International customers please add 25% for foreign handling. Remit check or money order, made payable to the Superintendent of Documents, or charge to your GPO Deposit Account, VISA, MasterCard or Discover. Mail to: New Orders, Superintendent of Documents, P.O. Box 371954, Pittsburgh, PA 15250–7954.

There are no restrictions on the republication of material appearing in the **Federal Register.**

How To Cite This Publication: Use the volume number and the page number. Example: 63 FR 12345.

SUBSCRIPTIONS AND COPIES

PUBLIC	
Subscriptions:	
Paper or fiche	**202–512–1800**
Assistance with public subscriptions	**512–1806**
General online information	**202–512–1530; 1–888–293–6498**
Single copies/back copies:	
Paper or fiche	**512–1800**
Assistance with public single copies	**512–1803**
FEDERAL AGENCIES	
Subscriptions:	
Paper or fiche	**523–5243**
Assistance with Federal agency subscriptions	**523–5243**

FEDERAL REGISTER WORKSHOP

THE FEDERAL REGISTER: WHAT IT IS AND HOW TO USE IT

FOR: Any person who uses the Federal Register and Code of Federal Regulations.

WHO: Sponsored by the Office of the Federal Register.

WHAT: Free public briefings (approximately 3 hours) to present:

1. The regulatory process, with a focus on the Federal Register system and the public's role in the development regulations.
2. The relationship between the Federal Register and Code of Federal Regulations.
3. The important elements of typical Federal Register documents.
4. An introduction to the finding aids of the FR/CFR system.

WHY: To provide the public with access to information necessary to research Federal agency regulations which directly affect them. There will be no discussion of specific agency regulations.

WASHINGTON, DC

WHEN: May 19, 1998 at 9:00 am.

WHERE: Office of the Federal Register
Conference Room
800 North Capitol Street, NW.
Washington, DC
(3 blocks north of Union Station Metro)

RESERVATIONS: 202–523–4538

Printed on recycled paper containing 100% post consumer waste

Contents

Federal Register

Vol. 63, No. 88

Thursday, May 7, 1998

Agency for Health Care Policy and Research
NOTICES
Meetings:
Agency for Health Care Policy and Research Technical Review Committee, 25210–25211

Agriculture Department
See Animal and Plant Health Inspection Service
See Forest Service
NOTICES
Agency information collection activities:
Submission for OMB review; comment request, 25193–25194

Animal and Plant Health Inspection Service
RULES
Plant-related quarantine, domestic:
Mediterranean fruit fly, 25153
Pine shoot beetle, 25153–25155
NOTICES
Environmental statements; availability, etc.:
Nonregulated status determinations—
AgrEvo USA Co.; genetically engineered soybeans, 25195–25196
AgrEvo USA Co.; genetically engineered sugar beets, 25194–25195

Census Bureau
NOTICES
Flagstaff, AZ; urbanized area designation, 25198–25199

Children and Families Administration
NOTICES
Grants and cooperative agreements; availability, etc.:
Head Start—
Early Head Start program, 25211–25212

Civil Rights Commission
NOTICES
Meetings; State advisory comittees:
Illinois, 25198

Coast Guard
RULES
Ports and waterways safety:
Greenwood Lake, NJ; safety zone, 25164–25166
PROPOSED RULES
Ports and waterways safety:
San Francisco Bay et al., CA; safety/security zone, 25189–25191
Regattas and marine parades:
Deerfield Beach Super Boat Grand Prix, 25187–25189

Commerce Department
See Census Bureau
See Export Administration Bureau
See International Trade Administration
See National Institute of Standards and Technology
NOTICES
Agency information collection activities:
Submission for OMB review; comment request, 25198

Committee for the Implementation of Textile Agreements
NOTICES
Cotton, wool, and man-made textiles:
China, 25202
Thailand, 25203

Customs Service
NOTICES
Commercial laboratory accreditations:
Approval—
Herguth Laboratories, Inc., 25268

Defense Department
See Defense Logistics Agency
PROPOSED RULES
Federal Acquisition Regulation (FAR):
Offeror or contractor representation requirements; reduction or removal, 25382–25386

Defense Logistics Agency
NOTICES
Committees; establishment, renewal, termination, etc.:
Senior Executive Service Performance Review Board; membership, 25204

Energy Department
See Federal Energy Regulatory Commission

Environmental Protection Agency
RULES
Air quality implementation plans; approval and promulgation; various States:
Pennsylvania; correction, 25167–25168
Pesticide programs:
Labeling requirements; respirator compliance; policy statement, 25168–25169
Superfund program:
National oil and hazardous substances contingency plan—
National priorities list update, 25169–25170
PROPOSED RULES
Air quality implementation plans; approval and promulgation; various States:
Missouri, 25191–25192

Export Administration Bureau
NOTICES
Meetings:
Regulations and Procedures Technical Advisory Committee, 25200–25201
Applications, hearings, determinations, etc.:
Export Materials, Inc., 25199–25200

Federal Aviation Administration
RULES
Airworthiness directives:
Eurocopter France, 25158–25160
Standard instrument approach procedures, 25160–25163
PROPOSED RULES
Airworthiness directives:
Eurocopter France, 25180–25183
Pratt & Whitney, 25179–25180

NOTICES
Meetings:
RTCA, Inc.; correction, 25265
Passenger facility charges; applications, etc.:
Valley International Airport, TX, 25265–25266

Federal Communications Commission
RULES
Common carrier services:
Terminal equipment, connection to telephone network—
Customer-provided terminal equipment; terms and conditions; U.S. and Canadian requirements harmonization; correction, 25170–25176

Federal Deposit Insurance Corporation
RULES
Development and review of regulations; policy statement, 25157–25158

Federal Election Commission
NOTICES
Meetings; Sunshine Act, 25209

Federal Energy Regulatory Commission
NOTICES
Applications, hearings, determinations, etc.:
Algonquin Gas Transmission Co., 25204
Consumers Energy Co., 25205
Great Lakes Gas Transmission L.P., 25205
K N Interstate Gas Transmission, 25205
MIGC, Inc., 25205–25206
Nekoosa Packaging Corp., 25206
Northern States Power Co., 25206
Northwest Pipeline Corp., 25206–25207
OGE Energy Resources, Inc., 25207
Southwest Gas Storage Co., 25207
Tenaska Frontier Partners, Ltd., 25207–25208
Texas Eastern Transmission Corp., 25208
Viking Gas Transmission Co., 25208–25209

Federal Maritime Commission
NOTICES
Freight forwarder licenses:
Freight Connection Inc. et al., 25209

Federal Mine Safety and Health Review Commission
PROPOSED RULES
Procedural rules, 25183–25187

Federal Reserve System
NOTICES
Banks and bank holding companies:
Formations, acquisitions, and mergers, 25209–25210
Permissible nonbanking activities, 25210
Banks and holding companies:
Formations, acquisitions, and mergers, 25210

Fish and Wildlife Service
RULES
Endangered and threatened species:
Harlequin duck, 25177–25178
NOTICES
Comprehensive conservation plans; availability, etc.:
Noxubee National Wildlife Refuge, MS, 25227–25228
Environmental statements; availability, etc.:
Incidental take permits—
Orange County, CA; coastal sage scrub, 25228–25229

Food and Drug Administration
RULES
Animal drugs, feeds, and related products:
New drug applications—
Competitive exclusion culture, 25163–25164
NOTICES
Food additive petitions:
Asahi Denka Kogyo K.K., 25212
Dow Chemical Co., 25212–25213
Mitsui Chemicals, Inc., 25213
GRAS or prior-sanctioned ingredients:
Dairy Crest Food, Ltd.; withdrawn, 25213–25214
Meetings:
Medical Devices Advisory Committee, 25214

Forest Service
NOTICES
Environmental statements; notice of intent:
Black Hills National Forest, SD, 25196–25197
Grand Mesa, Uncompahgre, and Gunnison National Forest, CO, 25197–25198
Meetings:
Southwest Washington Provincial Advisory Committee, 25198

General Services Administration
PROPOSED RULES
Federal Acquisition Regulation (FAR):
Offeror or contractor representation requirements; reduction or removal, 25382–25386

Geological Survey
NOTICES
Grant and cooperative agreement awards:
U.S. Army Topographic Engineering Center, VA, et al., 25229

Health and Human Services Department
See Agency for Health Care Policy and Research
See Children and Families Administration
See Food and Drug Administration
See Health Care Financing Administration
See National Institutes of Health
See Substance Abuse and Mental Health Services Administration

Health Care Financing Administration
RULES
Medicare:
Provider-sponsored organizations; waiver requirements and solvency standards, 25360–25379
PROPOSED RULES
Health Insurance Portability and Accountability Act of 1996:
Administrative requirements—
Electronic transactions standards, 25272–25320
National standard health care provider identifier, 25320–25357
NOTICES
Agency information collection activities:
Proposed collection; comment request, 25214–25216
Reporting and recordkeeping requirements, 25216–25219

Interior Department
See Fish and Wildlife Service
See Geological Survey
See Land Management Bureau
See Minerals Management Service

Internal Revenue Service
NOTICES
Agency information collection activities:
Proposed collection; comment request, 25268–25270

International Trade Administration
NOTICES
Export trade certificates of review, 25201

International Trade Commission
NOTICES
Meetings; Sunshine Act, 25233–25234

Labor Department
NOTICES
Meetings:
President's Committee on International Labor Organization, 25234
Privacy Act:
Systems of records, 25234–25236

Land Management Bureau
NOTICES
Agency information collection activities:
Proposed collection; comment request, 25229–25230
Submission for OMB review; comment request, 25230
Committees; establishment, renewal, termination, etc.:
San Pedro National Conservation Area Advisory Committee, 25230–25231
Environmental statements; availability, etc.:
Northeast Oregon assembled land exchange, OR, 25231
Public land orders:
Oregon, 25231–25232
Survey plat filings:
Montana, 25232

Maritime Administration
NOTICES
Meetings:
Voluntary Intermodal Sealift Agreement Joint Planning Advisory Group, 25266

Minerals Management Service
PROPOSED RULES
Outer Countinental Shelf; oil, gas, and sulphur operations:
Postlease operations safety; update and clarification, 25187
NOTICES
Environmental statements; availability, etc.:
Gulf of Mexico OCS—
Oil and gas operations; Central Gulf of Mexico, 25232–25233
Meetings:
Minerals Management Advisory Board, 25233

Mine Safety and Health Federal Review Commission
See Federal Mine Safety and Health Review Commission

National Aeronautics and Space Administration
PROPOSED RULES
Federal Acquisition Regulation (FAR):
Offeror or contractor representation requirements; reduction or removal, 25382–25386
NOTICES
Environmental statements; availability, etc.:
Stardust mission, 25236–25237

National Institute of Standards and Technology
NOTICES
Information processing standard, Federal:
COBOL, FORTRAN, etc.: validation services terminated delayed, 25201–25202

National Institutes of Health
NOTICES
Grants and cooperative agreements; availability, etc.:
National Cancer Institute—
Cooperative Research and Development Agreeement (CRADA); development of methods to detect mutations in both genes sequences using nucleic acid technology, 25219–25220
National Institute on Aging—
Cooperative Research and Development Agreement (CRADA); to develop a vaccine for pneumonia, 25220
Meetings:
Center for Scientific Review special emphasis panels, 25220–25221
National Cancer Institute, 25221
National Center for Research Resources, 25221–25222
National Institute of Child Health and Human Development, 25222–25223
National Institute of Dental Research, 25223–25224
National Institute of General Medical Sciences, 25223
National Institute on Alcohol Abuse and Alcoholism, 25223, 25224
National Institutes of Environmental Health Sciences, 25224–25225
Warren Grant Magnuson Clinical Center Board of Governors, 25225
Patent licenses; non-exclusive, exclusive, or partially exclusive:
Whatman, Inc., 25225

Nuclear Regulatory Commission
RULES
Criteria and procedures for determining eligibility for access to restricted data, etc.:
Fee schedule for licensee personnel; access authorization, 25156–25157
NOTICES
Agency information collection activities:
Proposed collection; comment request, 25238
Submission for OMB review; comment request, 25238–25239
Applications, hearings, determinations, etc.:
Johnson, Thomas C., 25239–25240
Nardslico, Albert M, Jr., 25240–25242
Northern States Power Co., 25242–25243
Tennessee Valley Authority, 25243–25245

Postal Service
RULES
Organization and administration:
Post Office expansion, relocation, and construction, 25166–25167

Public Health Service
See Agency for Health Care Policy and Research
See Food and Drug Administration
See National Institutes of Health
See Substance Abuse and Mental Health Services Administration

Securities and Exchange Commission
NOTICES
Investment Company Act of 1940:
Deregistration applications—
InterCapital Managed Municipal Trust, et al., 25247–25249
Self-regulatory organizations; proposed rule changes:
American Stock Exchange, Inc., 25249–25252
National Association of Securities Dealers, Inc., 25253–25255
Pacific Exchange, Inc., 25255–25258
Philadelphia Stock Exchange, Inc., 25258–25260
Applications, hearings, determinations, etc.:
Extended Stay America, Inc., 25245–25247

Small Business Administration
NOTICES
Disaster loan areas:
Alabama, 25260
Florida, 25260
Georgia, 25260–25261
Oregon, 25261
Tennessee, 25261

Social Security Administration
NOTICES
Agency information collection activities:
Proposed collection; comment request, 25261–25263
Disability determination procedures:
Testing modifications—
Disability determination services full process model, 25263–25264

State Department
NOTICES
Foreign Operations, Export Financing, and Related Programs Appropriations Act:
Ukraine; response to investor complaints, 25264–25265

Substance Abuse and Mental Health Services Administration
NOTICES
Federal agency urine drug testing; certified laboratories meeting minimum standards, list, 25226–25227

Surface Transportation Board
NOTICES
Railroad operation, acquisition, construction, etc.:
Dakota, Minnesota & Eastern Railroad Corp., 25266–25268

Textile Agreements Implementation Committee
See Committee for the Implementation of Textile Agreements

Transportation Department
See Coast Guard
See Federal Aviation Administration
See Maritime Administration
See Surface Transportation Board

Treasury Department
See Customs Service
See Internal Revenue Service

United States Information Agency
NOTICES
Art objects; importation for exhibition:
Queens and Commoners of Egypt's New Kingdom, 25270

Separate Parts In This Issue

Part II
Department of Health and Human Services, Health Care Financing Administration, 25272–25357

Part III
Department of Health and Human Services, Health Care Financing Administration, 25360–25379

Part IV
Department of Defense, General Services Administration, National Aeronautics and Space Administration, 25382–25386

Reader Aids
Consult the Reader Aids section at the end of this issue for phone numbers, online resources, finding aids, reminders, and notice of recently enacted public laws.

CFR PARTS AFFECTED IN THIS ISSUE

A cumulative list of the parts affected this month can be found in the Reader Aids section at the end of this issue.

7 CFR
301 (2 documents) 25153

10 CFR
11.....25156
25.....25156

12 CFR
Ch. III.....25157

14 CFR
39.....25158
97 (2 documents) 25160, 25161

Proposed Rules:
39 (3 documents) 25179 25180, 25182

21 CFR
510.....25163
529.....25163

29 CFR

Proposed Rules:
2700.....25183

30 CFR

Proposed Rules:
218.....25187
250.....25187
256.....25187

33 CFR
165.....25164

Proposed Rules:
100.....25187
165.....25189

39 CFR
241.....25166

40 CFR
52.....25167
156.....25168
300.....25169

Proposed Rules:
52.....25191

42 CFR
422.....25360

45 CFR

Proposed Rules:
142 (2 documents) 25272

47 CFR
68.....25170

48 CFR

Proposed Rules:
1.....25382
4.....25382
12.....25382
14.....25382
19.....25382
26.....25382
27.....25382
32.....25382
41.....25382
52.....25382

50 CFR
17.....25177

Rules and Regulations

Federal Register
Vol. 63, No. 88
Thursday, May 7, 1998

This section of the FEDERAL REGISTER contains regulatory documents having general applicability and legal effect, most of which are keyed to and codified in the Code of Federal Regulations, which is published under 50 titles pursuant to 44 U.S.C. 1510.

The Code of Federal Regulations is sold by the Superintendent of Documents. Prices of new books are listed in the first FEDERAL REGISTER issue of each week.

DEPARTMENT OF AGRICULTURE

Animal and Plant Health Inspection Service

7 CFR Part 301

[Docket No. 97–056–10]

Mediterranean Fruit Fly; Quarantined Areas; Clarification

AGENCY: Animal and Plant Health Inspection Service, USDA.

ACTION: Interim rules; clarification.

SUMMARY: This document clarifies the status of amendments contained in two interim rules effective the same day. In an interim rule effective April 17, 1998, and published in the **Federal Register** on April 22, 1998 (63 FR 19797–19798, Docket No. 97–056–9), we amended the Mediterranean fruit fly regulations by removing the quarantined area in Hillsborough County, FL, from the list of quarantined areas. Also, in an interim rule effective April 17, 1998, and published in the **Federal Register** on April 23, 1998 (63 FR 20053–20054, Docket No. 98–046–1), we amended the Mediterranean fruit fly regulations by adding a portion of Dade County, FL, to the list of quarantined areas and restricting the interstate movement of regulated articles from the quarantined area.

DATES: Effective April 17, 1998, the only area quarantined for the Mediterranean fruit fly in the continental United States is a portion of Dade County, FL.

FOR FURTHER INFORMATION CONTACT: Mr. Michael B. Stefan, Operations Officer, Domestic and Emergency Programs, PPQ, APHIS, 4700 River Road Unit 134, Riverdale, MD 20737–1236, (301) 734–8247; or e-mail: mstefan@aphis.usda.gov.

SUPPLEMENTARY INFORMATION:

Background

On April 22, 1998, we published in the **Federal Register** (63 FR 19797–19798, Docket No. 97–056–9) an interim rule that amended the Mediterranean fruit fly (Medfly) regulations by removing the quarantined area in Hillsborough County, FL, from the list of quarantined areas. Also, on April 23, 1998, we published in the **Federal Register** (63 FR 20053–20054, Docket No. 98–046–1) another interim rule that amended the Medfly regulations by adding a portion of Dade County, FL, to the list of quarantined areas and restricting the interstate movement of regulated articles from the quarantined area. Both the dockets were signed and became effective on April 17, 1998.

In the interim rule that removed Hillsborough County, FL, from the list of quarantined areas, we inadvertently failed to delete the statement saying that, as a result of this action, there were no longer any areas in the continental United States quarantined because of Medfly. While this would have been true if no additional Medflies had been found, because of the finding of Medfly in Dade County, FL, that statement was incorrect at the time the docket was signed. The interim rule that added Dade County, FL, to the list of areas quarantined because of the Medfly quarantined a described area of Dade County, FL.

The purpose of this notice is to clarify our Medfly quarantine regulations. Effective April 17, 1998, the only area quarantined for the Medfly in the continental United States is a portion of Dade County, FL.

Authority: 7 U.S.C. 147a, 150bb, 150dd, 150ee, 150ff, 161, 162, and 164–167; 7 CFR 2.22, 2.80, and 371.2(c).

Done in Washington, DC, this 30th day of April 1998.

Craig A. Reed,

Acting Administrator, Animal and Plant Health Inspection Service.

[FR Doc. 98–12123 Filed 5–6–98; 8:45 am]

BILLING CODE 3410–34–P

DEPARTMENT OF AGRICULTURE

Animal and Plant Health Inspection Service

7 CFR Part 301

[Docket No. 97–100–2]

Pine Shoot Beetle; Quarantined Areas

AGENCY: Animal and Plant Health Inspection Service, USDA.

ACTION: Final rule.

SUMMARY: We are adopting as a final rule, with one change, an interim rule that amended the pine shoot beetle regulations by adding 78 counties in Illinois, Indiana, Maryland, Michigan, New York, Ohio, Pennsylvania, West Virginia, and Wisconsin to the list of quarantined areas. The interim rule was necessary to prevent the spread of the pine shoot beetle, a pest of pine products, into noninfested areas of the United States. This final rules makes one change to the map of regulated counties that appeared in the interim rule to add a county that mistakenly was not included on the map.

EFFECTIVE DATE: May 7, 1998.

FOR FURTHER INFORMATION CONTACT: Ms. Christine K. Markham, Regional Program Manager, PPQ, APHIS, 505 South Lenola Road, Suite 201, Moorestown, NJ, 08057–1549, (609) 753–5073; or Ms. Coanne O'Hern, Operations Officer, Domestic and Emergency Programs, PPQ, APHIS, 4700 River Road Unit 134, Riverdale, MD 20737–1236, (301) 734–8717, E-mail: cohern@aphis.usda.gov.

SUPPLEMENTARY INFORMATION:

Background

In an interim rule effective on December 3, 1997, and published in the **Federal Register** on December 9, 1997 (62 FR 64677–64680, Docket No. 97–100–1), we amended the pine shoot beetle regulations in 7 CFR part 301 by adding 78 counties in Illinois, Indiana, Maryland, Michigan, New York, Ohio, Pennsylvania, West Virginia, and Wisconsin to the list of quarantined areas in § 301.50–3(c).

Comments on the interim rule were required to be received on or before February 9, 1998. We did not receive any comments.

We are making one change to the interim rule to correct an error. The

interim rule added Boone County, IL, to the list of quarantined areas in § 301.50–3(c). However, we mistakenly neglected to also add Boone County, IL, to the map of quarantined areas in § 301.50–3(d). We have corrected this error in this final rule.

Therefore, based on the rationale set forth in the interim rule and in this document, we are adopting the provisions of the interim rule as a final rule, with the change discussed in this document.

This final rule also affirms the information contained in the interim rule concerning Executive Orders 12866, 12372, and 12988, and the Paperwork Reduction Act.

Further, for this action, the Office of Management and Budget has waived the review process required by Executive Order 12866.

Effective Date

This document makes final an interim rule that amended the pine shoot beetle regulations by adding 78 counties in Illinois, Indiana, Maryland, Michigan, New York, Ohio, Pennsylvania, West Virginia, and Wisconsin to the list of quarantined areas. This final rule makes one change to the map of regulated counties that appeared in the interim rule. We are adding to the map one county that was added to the list of quarantined areas but was mistakenly not included on the map. This is not a substantive change. Therefore, in accordance with the administrative procedure provisions in 5 U.S.C. 553, we are making this rule effective less than 30 days after publication in the **Federal Register**. Specifically, the Administrator of the Animal and Plant Health Inspection Service has determined that this rule should be effective upon publication in the **Federal Register**.

Regulatory Flexibility Act

In accordance with 5 U.S.C. 604, we have performed a Final Regulatory Flexibility Analysis, set forth below, regarding the economic impact of this rule on small entities. Based on the information we have, there is no basis to conclude that this rule will result in any significant economic impact on a substantial number of small entities.

Under the Plant Quarantine Act and the Federal Plant Pest Act (7 U.S.C. 150bb, 150dd, 150ee, 150ff, 161, 162, and 164–167), the Secretary of Agriculture is authorized to regulate the interstate movement of articles to prevent the spread of injurious plant pests in the United States.

The pine shoot beetle (PSB) regulations impose restrictions on the interstate movement of certain regulated articles from quarantined areas in order to prevent the spread of PSB into noninfested areas of the United States. The interim rule amended these regulations by adding 78 counties in 9 States to the list of quarantined areas. This action was necessary to prevent the spread of PSB, a pest of pine products, into noninfested areas of the United States. In our Initial Regulatory Flexibility Analysis, we solicited comments on the potential effects of the interim rule on small entities. In particular, we sought data and other information to determine the number and kinds of small entities that may incur benefits or costs from implementation of the interim rule. We received no comments on the Initial Regulatory Flexibility Analysis contained in the interim rule.

Currently, there are approximately 1,046 nursery operations in the 78 newly regulated counties. Of those, approximately 717 are considered small entities. We have not determined the size of the remaining 329 nursery operations in the following 6 counties: Boone County, IL; Muskegon and Ottawa Counties, MI; Wayne County, NY; Allen County, OH; and Indiana County, PA. Small nurseries are defined as those entities with annual sales of less than $150,000. Most of these nurseries, both large and small, specialize in production of deciduous landscape products, but some also produce rooted pine Christmas trees and some pine nursery stock. Most of the nurseries that produce rooted pine Christmas trees and pine nursery stock will not be notably affected by this rule, either because these commodities comprise a very minor share of their products or because they serve largely local populations.

Other Christmas tree producers and logging operations in the 78 newly regulated counties may also be affected by this rule. In the interim rule, we explained that we were unable to determine the number of these types of small entities in the newly regulated counties, and invited comments to help us make that determination. However, as stated previously, we did not receive any comments.

Affected businesses can maintain markets outside the regulated areas by arranging for inspections and the issuance of certificates or limited permits, or by fumigating or cold treating the regulated articles. Inspection is provided at no cost during normal business hours. However, there may be imputed costs to the businesses in preparing for the inspections and possible marketing delays. Such costs and inconveniences may be more likely for producers of live pine nursery stock, since inspection is required of each live plant before it may be moved to a nonregulated area. For producers in these counties who already have their trees inspected for other pests, another inspection may be a relatively small burden, especially when compared to the societal benefits of minimizing the human-assisted movement of PSB.

The alternative to the interim rule was to make no changes in the regulations. After consideration, we rejected this alternative because the quarantine of the 78 counties listed in the interim rule is necessary to prevent the artificial spread of PSB.

This rule contains no reporting or recordkeeping requirements.

List of Subjects in 7 CFR Part 301

Agricultural commodities, Incorporation by reference, Plant diseases and pests, Quarantine, Reporting and recordkeeping requirements, Transportation.

PART 301—DOMESTIC QUARANTINE NOTICES

1. The authority citation for part 301 continues to read as follows:

Authority: 7 U.S.C. 147a, 150bb, 150dd, 150ee, 150ff, 161, 162, and 164–167; 7 CFR 2.22, 2.80, and 371.2(c).

2. In § 301.50–3, paragraph (d) is amended by revising the map to read as follows:

§ 301.50–3 Quarantined areas.

* * * * *

(d) * * *

BILLING CODE 3410–34–P

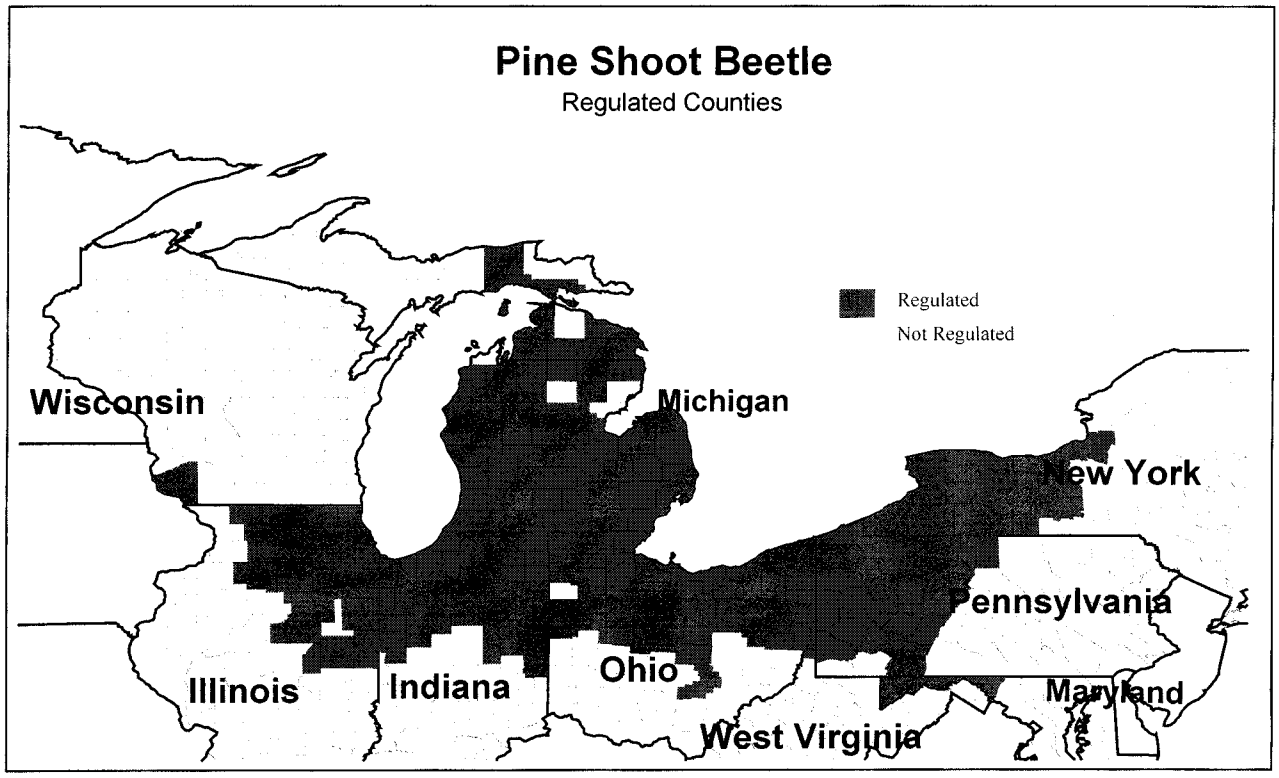

Done in Washington, DC, this 30th day of April 1998.

Craig A. Reed,

Acting Administrator, Animal and Plant Health Inspection Service.

[FR Doc. 98–12124 Filed 5–6–98; 8:45 am]

BILLING CODE 3410–34–C

NUCLEAR REGULATORY COMMISSION

10 CFR Parts 11 and 25

RIN 3150–AF90

Access Authorization Fee Schedule for Licensee Personnel

AGENCY: Nuclear Regulatory Commission.

ACTION: Final rule.

SUMMARY: The Nuclear Regulatory Commission (NRC) is amending its regulations to revise the fee schedule for background investigations of licensee personnel who require access to National Security Information and/or Restricted Data and access to or control over Special Nuclear Material. These amendments comply with current regulations that provide that the NRC will publish fee adjustments upon notifications of any changes in the rate charged the NRC by the Office of Personnel Management (OPM) for conducting investigations.

EFFECTIVE DATE: May 7, 1998.

FOR FURTHER INFORMATION CONTACT: Beth Bradshaw, Division of Facilities and Security, Office of Administration, U.S. Nuclear Regulatory Commission, Washington, DC 20555–0001, telephone (301) 415–6540, or by Internet electronic mail at MBB1@NRC.GOV.

SUPPLEMENTARY INFORMATION: The OPM conducts access authorization background investigations for the NRC and sets the rates charged for these investigations. Effective October 1, 1997, OPM changed the rates it charges NRC for conducting access authorization background investigations. Because the fees that NRC charges its licensees for special nuclear material access authorizations and personnel security clearances are determined by the rates charged by OPM for conducting the background investigations, the fee schedules in NRC regulations must be amended to reflect the OPM rate changes. The NRC is passing these rate changes to NRC licensees. These revisions comply with current regulations that provide that NRC will publish fee adjustments upon notification of any changes in the rates charged the NRC by OPM for conducting the investigations. See 10 CFR 11.15(e)(2)(1997) and 10 CFR 25.17(e)(1997).

Because these are amendments dealing with agency practice and procedure, the notice and comment provisions of the Administrative Procedure Act do not apply pursuant to 5 U.S.C. 553(b)(A)(1997). The amendments are effective upon publication in the **Federal Register**. Good cause exists to dispense with the usual 30-day delay in the effective date because the amendments are of a minor and administrative nature dealing with rate changes to the NRC fee schedules.

Environmental Impact: Categorical Exclusion

The NRC has determined that this final rule is the type of action described in categorical exclusion 10 CFR 51.22(c)(1)(1997). Therefore, neither an environmental impact statement nor an environmental assessment has been prepared for this final rule.

Paperwork Reduction Act Statement

This final rule does not contain a new or amended information collection requirement subject to the Paperwork Reduction Act of 1995 (44 U.S.C. 3501 *et seq.* (1997)). Existing requirements were approved by the Office of Management and Budget, approval numbers 3150–0046 and 3150–0062.

Public Protection Notification

If an information collection does not display a currently valid OMB control number, the NRC may not conduct or sponsor, and a person is not required to respond to, the information collection.

Regulatory Analysis

The NRC has prepared a regulatory analysis on this final regulation. The analysis examines the costs and benefits of the alternatives considered by the Commission. The analysis is available for inspection in the NRC Public Document Room, 2120 L Street, NW (lower level), Washington, DC. Single copies of the analysis may be obtained from Beth Bradshaw, Division of Facilities and Security, Office of Administration, U. S. Nuclear Regulatory Commission, Washington, DC 20555–0001, telephone: (301) 415–6540.

Backfit Analysis

The NRC has determined that the backfit rule does not apply to this final rule and a backfit analysis is not required because these amendments do not involve any provisions that would impose backfits as defined in 10 CFR 50.109 (1997).

Small Business Regulatory Enforcement Fairness Act

In accordance with the Small Business Regulatory Enforcement Fairness Act of 1996, 5 U.S.C. 801 *et seq.* (1997) and 15 U.S.C. 657 (1997), the NRC has determined that this action is not a major rule and has verified this determination with the Office of Information and Regulatory Affairs of OMB.

List of Subjects

10 CFR Part 11

Hazardous materials—transportation, Investigations, Nuclear materials, Reporting and recordkeeping requirements, Security measures, Special nuclear material.

10 CFR Part 25

Classified information, Criminal penalties, Investigations, Reporting and recordkeeping requirements, Security measures.

For the reasons set out in the preamble and under the authority of the Atomic Energy Act of 1954, as amended; the Energy Reorganization Act of 1974, as amended; and 5 U.S.C. 552 and 553, the NRC is adopting the following amendments to 10 CFR Parts 11 and 25.

PART 11—CRITERIA AND PROCEDURES FOR DETERMINING ELIGIBILITY FOR ACCESS TO OR CONTROL OVER SPECIAL NUCLEAR MATERIAL

1. The authority citation for Part 11 continues to read as follows:

Authority: Sec. 161, 68 Stat. 948, as amended (42 U.S.C. 2201); sec. 201, 88 Stat. 1242, as amended (42 U.S.C. 5841).

Section 11.15(e) also issued under sec. 501, 85 Stat. 290 (31 U.S.C. 483a).

2. In § 11.15 paragraph (e)(1) is revised to read as follows:

§ 11.15 Application for special nuclear material access authorization.

* * * * *

(e)(1) Each application for special nuclear material access authorization, renewal, or change in level must be accompanied by the licensee's remittance, payable to the U.S. Nuclear Regulatory Commission, according to the following schedule:

i. NRC–U requiring full field investigation	$3,275
ii. NRC–U requiring full field investigation (expedited processing)	3,800
iii. NRC–U based on certification of comparable full field background investigation	[1] 0
iv. NRC–U or R renewal	[1] 80
v. NRC–R	[1] 80
vi. NRC–R based on certification of comparable investigation	[2] 0

[1] If the NRC determines, based on its review of available data, that a full field investigation is necessary, a fee of $3,275 will be assessed prior to the conduct of the investigation.

[2] If the NRC determines, based on its review of available data, that a National Agency Check and Credit investigation is necessary, a fee of $80.00 will be assessed prior to the conduct of the investigation; however, if a full field investigation is deemed necessary by the NRC, based on its review of available data, a fee of $3,275 will be assessed prior to the conduct of the investigation.

* * * * *

PART 25—ACCESS AUTHORIZATION FOR LICENSEE PERSONNEL

3. The authority citation for Part 25 continues to read as follows:

Authority: Secs. 145, 161, 68 Stat. 942, 948, as amended (42 U.S.C. 2165, 2201); sec. 201, 88 Stat. 1242, as amended (42 U.S.C. 5841); E.0. 10865, as amended, 3 CFR 1959–1963 Comp., p. 398 (50 U.S.C. 401, note); E.O. 12829, 3 CFR, 1993 Comp., p. 570; E.O. 12958, 3 CFR, 1995 Comp., p. 333; E.O. 12968, 3 CFR, 1995 Comp., p. 396.

Appendix A also issued under 96 Stat. 1051 (31 U.S.C. 9701).

4. Appendix A to Part 25 is revised to read as follows:

APPENDIX A TO PART 25—FEES FOR NRC ACCESS AUTHORIZATION

Category	Fee
Initial "L" Access Authorization	[1] $80
Reinstatement of "L" Access Authorization	[1] 80
Extension or Transfer of "L" Access Authorization	[1] 80
Initial "Q" Access Authorization	3,275
Initial "Q" Access Authorization (expedited processing)	3,800
Reinstatement of "Q" Access Authorization	[2] 3,275
Reinstatement of "Q" Access Authorization (expedited processing)	[2] 3,800
Extension or Transfer of "Q"	[2] 3,275
Extension or Transfer of "Q" (expedited processing)	[2] 3,800

[1] If the NRC determines, based on its review of available data, that a full field investigation is necessary, a fee of $3,275 will be assessed prior to the conduct of the investigation.

[2] Full fee will only be charged if investigation is required.

Dated at Rockville, Maryland, this 13th day February, 1998.

For the Nuclear Regulatory Commission.

L. Joseph Callan,

Executive Director for Operations.

[FR Doc. 98–12180 Filed 5–6–98; 8:45 am]

BILLING CODE 7590–01–P

FEDERAL DEPOSIT INSURANCE CORPORATION

12 CFR Ch. III

Statement of Policy on the Development and Review of Regulations

AGENCY: Federal Deposit Insurance Corporation (FDIC).

ACTION: Revision of statement of policy.

SUMMARY: The FDIC is revising its Statement of Policy entitled ''Development and Review of Regulations'' (Policy). The revisions streamline the Policy and focus it more sharply on the basic principles that underlie the Board's approach to regulation. The provisions of the Policy that established internal procedures or merely restated the law have been deleted. The revisions also expand the scope of the Policy to include written statements of policy adopted by the FDIC Board of Directors and revise its title accordingly.

EFFECTIVE DATE: May 7, 1998.

FOR FURTHER INFORMATION CONTACT: Steven F. Hanft, Assistant Executive Secretary (202/898–3907); or Nancy Schucker Recchia, Counsel (202/898–8885).

SUPPLEMENTARY INFORMATION: The FDIC is revising its Statement of Policy entitled ''Development and Review of Regulations.'' The existing Policy has stated the Board's commitment to basic principles of sound regulation and established internal administrative procedures for FDIC staff to follow when developing and reviewing regulations. Pursuant to section 303(a) of the Riegle Community Development and Regulatory Improvement Act of 1994 (CDRI), the Policy was reviewed to streamline it and to remove inconsistencies and outmoded and duplicative provisions. As a part of this review, the FDIC has given careful consideration to the continuing need for this Policy and how its content might be presented to best inform the public with respect to the FDIC's development and review of regulations and written statements of policy. The revised Policy's reflects the Board's continuing commitment to improving the quality of its regulations and policies, to minimizing regulatory burdens on the public and the banking industry, and generally to ensuring that its regulations and policies achieve legislative goals effectively and effectively.

The revised Policy recognizes that the Board carries out its regulatory function through two separate processes of public notice: the promulgation of regulations pursuant to the requirements of the Administrative Procedure Act, and the issuance of less formal written statements of policy. Like regulations, written statements of policy may affect the banking industry and the public. Because the Board believes it is important to inform all interested parties of its approach to the development of written statements of policy, the scope of the revised Policy has been augmented to include an explanation of the principles by which the FDIC develops and reviews written statements of policy, and the title of the Policy has been revised to reflect the expanded scope.

The revisions streamline the Policy and focus it more sharply on the following basic principles that underlie the Board's approach to regulation:

- Burdens imposed on the banking industry should be minimized.
- Regulations should be clearly and understandably written.
- The public should have a meaningful opportunity to participate in the rulemaking process.
- Common statutory and supervisory mandates should be implemented by Federal financial institutions regulator in a uniform way.
- Regulations and statements of policy should be reviewed periodically.

The revised Policy has been streamlined to remove those provisions that established internal procedures or merely restated the applicable provisions of law. As part of the CDRI review, the FDIC gave careful consideration to the most useful and efficient format for presenting all of the information relevant to regulation and written policy statement development and review. It was determined to separate these fundamental guiding principles from the more technical or procedural requirements. The guiding principles which the Board believes are relevant to public understanding of its process are contained in the revised Policy. The technical and procedural requirements are contained in a newly developed handbook on Development and Review of FDIC Regulations and Policy Statements. The handbook provides comprehensive guidance to FDIC managers and staff involved in developing and reviewing FDIC regulations and statements of policy and can be revised easily to reflect changes in statutory requirements and in the FDIC's organizational arrangements.

Text

The text of the revised statement of policy follows:

Development and Review of FDIC Regulations and Policies

Statement of Policy

Purpose and Scope. The Federal Deposit Insurance Corporation is committed to continually improving the quality of its regulations and policies, to minimizing regulatory burdens on the public and the banking industry, and generally to ensuring that its regulations and policies achieve legislative goals effectively and efficiently. The purpose of this statement of policy (Policy) is to establish basic principles which guide the FDIC's promulgation and review of regulations and written statements of policy. The scope of this Policy is limited to regulations and written statements of policy issued by the Board of Directors of the FDIC.

Principles For the Development and Review of Regulations and Statements of Policy. The following principles guide the FDIC in its development of regulations and written policies:

• Burdens imposed on the banking industry and the public should be minimized. Before issuing a regulation or written statement of policy the FDIC gives careful consideration to the need for such an issuance. Frequently a regulation is required by statute. Alternatively, the FDIC may identify a need for a supervisory tool to implement its statutory obligations, or to clarify its policy for the benefit of the banking industry or the public. Once the need for a regulation or statement of policy is determined, the FDIC seeks to minimize to the extent practicable the burdens which such issuance imposes on the banking industry and the public. New reporting and recordkeeping requirements imposed by a regulation are carefully analyzed. The effect of the regulation or statement of policy on competition within the industry is considered. Particular attention is focused on the impact that a regulation will have on small institutions and whether there are alternatives to accomplish the FDIC's goal which would minimize any burden on small institutions. Prior to issuance, the potential benefits associated with the regulation or statement of policy are weighed against the potential costs.

• Regulations and policies should be clearly and understandably written. The Board seeks to make its regulations and statements of policy as clear and as understandable as possible to those persons who are affected by them. In developing or reviewing existing regulations and statements of policy, the Board considers the document's organizational structure as well as the specific language used; both are important components to achieving a clear and useful statement.

• The public should have a meaningful opportunity to participate in the rulemaking process. The Board seeks to improve its regulations and statement of policy during the development phase. Whether a new regulation is being promulgated or an existing one revised, the Board gives careful consideration to the implications of its actions as public policy. Public participation in the rulemaking process is an opportunity for the Board to hear directly from affected members of the public with important experience and thoughtful insights related to the pertinent issues. A person or organization may petition the Board for the issuance, amendment, or repeal of any regulation or policy by submitting a written petition to the Executive Secretary of the FDIC. The petition should include a complete and concise statement of the petitioner's interest in the subject matter and the reasons why the petition should be granted.

All rulemaking is carried out in accordance with the APA, by which the Board provides the public with notices of proposed rulemaking and opportunities to submit comments on the proposals. The Board will often seek public comment on proposed statements of policy as well. All comments and proposed alternatives received during the comment period are considered prior to the issuance of a final rule or statement of policy. The Board takes final action on proposed regulations and policies as promptly as circumstances allow. If a significant period of time elapses following the publication of a proposed rule or policy without final action, the Board will consider withdrawing the proposal or re-publishing it for comment. If the Board decides to reconsider a proposed regulation or statement of policy that has been withdrawn, it will begin the rulemaking or policy development process anew.

• Common statutory and supervisory requirements should be implemented by the Federal financial institutions regulators in a uniform way. The FDIC has many statutory and supervisory requirements that are common to the Board of Governors of the Federal Reserve System, the Office of the Comptroller of the Currency, the Office of Thrift Supervision, and/or the National Credit Union Administration. The more uniform the Federal financial institutions regulators can be in their regulations, policies and approaches to supervision, the easier it will be for the industry and the public to comply with the regulators' requirements. The FDIC is a member of the Federal Financial Institutions Examination Council (FFIEC) and works with the other federal financial institutions regulators through the FFIEC to make uniform those regulations and policies that implement common statutory or supervisory policies.

• Regulations and statements of policy should be reviewed periodically. To ensure that the FDIC's regulations and written statements of policy are current, effective, efficient and continue to meet the principles set forth in this Policy, the FDIC will periodically undertake a review of each regulation and statement of policy. The Executive Secretary of the FDIC will, consistent with applicable laws and in coordination with other financial institutions regulators, establish a schedule and procedures for the reviews. Factors to be considered in determining whether a regulation or written policy should be revised or eliminated include: the continued need for the regulation or policy; opportunities to simplify or clarify the regulation or policy; the need to eliminate duplicative and inconsistent regulations and policies; and the extent to which technology, economic conditions, and other factors have changed in the area affected by the regulation or policy. The result of this review will be a specific decision for each regulation and statement of policy to either revise, rescind or retain the issuance in its then-current form. The principles of regulation and statement of policy development, as articulated at the beginning of this Policy, will apply to the periodic reviews as well.

By order of the Board of Directors.

Dated at Washington, D.C. this 28th day of April, 1998.

Federal Deposit Insurance Corporation.

Robert E. Feldman,

Executive Secretary.

[FR Doc. 98–12059 Filed 5–6–98; 8:45 am]

BILLING CODE 6714–01–M

DEPARTMENT OF TRANSPORTATION

Federal Aviation Administration

14 CFR Part 39

[Docket No. 97–SW–49–AD; Amendment 39–10515; AD 98–10–04]

RIN 2120–AA64

Airworthiness Directives; Eurocopter France Model SA–365N1, AS–365N2, and SA–366G1 Helicopters

AGENCY: Federal Aviation Administration, DOT.

ACTION: Final rule.

SUMMARY: This amendment adopts a new airworthiness directive (AD), applicable to Eurocopter France (Eurocopter) Model SA–365N1, AS–365N2, and SA–366G1 helicopters, that requires initial and repetitive inspections of the tail rotor blade Kevlar tie-bar (Kevlar tie-bar) for cracks or delaminations. This amendment is prompted by a report of delamination of a Kevlar tie-bar. The actions specified by this AD are intended to detect cracks that could lead to delamination of the Kevlar tie-bar, loss of tail rotor control, and subsequent loss of control of the helicopter.

DATES: Effective June 11, 1998.

The incorporation by reference of certain publications listed in the regulations is approved by the Director of the Federal Register as of June 11, 1998.

ADDRESSES: The service information referenced in this AD may be obtained from American Eurocopter Corporation, 2701 Forum Drive, Grand Prairie, Texas 75053–4005, telephone (972) 641–3460, fax (972) 641–3527. This information may be examined at the FAA, Office of the Regional Counsel, Southwest Region, 2601 Meacham Blvd., Room 663, Fort Worth, Texas; or at the Office of the Federal Register, 800 North Capitol Street, NW., suite 700, Washington, DC.

FOR FURTHER INFORMATION CONTACT: Mr. Mike Mathias, Aerospace Engineer, FAA, Rotorcraft Directorate, Rotorcraft Standards Staff, Fort Worth, Texas 76193–0111, telephone (817) 222–5123, fax (817) 222–5961.

SUPPLEMENTARY INFORMATION: A proposal to amend part 39 of the Federal Aviation Regulations (14 CFR part 39) to include an airworthiness directive (AD) that is applicable to Eurocopter Model SA–365N1, AS–365N2, and SA–366G1 helicopters was published in the **Federal Register** on March 13, 1998 (63 FR 12419). That action proposed to require initial and repetitive inspections of the tail rotor blade Kevlar tie-bar for cracks or delaminations.

Interested persons have been afforded an opportunity to participate in the making of this amendment. Due consideration has been given to the comment received.

The sole commenter states that the proposed AD is more restrictive than either Eurocopter France Service Bulletin 05.00.34R3, dated November 14, 1996, or Direction Generale De L'Aviation Civile (DGAC) AD 92–185–033(B)R4, dated December 4, 1996, which allow operation of a helicopter having cracks that are within a certain tolerance. The commenter states that not all cracks warrant replacement of the part, and that the proposed AD should give the same parameters for the cracks as given in the Eurocopter France service bulletin and the DGAC AD. The FAA does not concur. Any crack or delamination of the Kevlar tie-bar could initiate a failure and lead to loss of control of the helicopter. The FAA considers any crack in a flight critical part to be unsafe, and the part must be replaced prior to further flght.

After careful review of the available data, including the comment noted above, the FAA has determined that air safety and the public interest require the adoption of the rule as proposed.

The FAA estimates that 47 helicopters of U.S. registry will be affected by this AD, that it will take approximately 4 work hours per helicopter to accomplish the actions, and that the average labor rate is $60 per work hour. Required parts will cost approximately $3,000 per blade. Based on these figures, the total cost impact of the AD on U.S. operators is estimated to be $152,280 to replace one blade and perform one inspection on each helicopter.

The regulations adopted herein will not have substantial direct effects on the States, on the relationship between the national government and the States, or on the distribution of power and responsibilities among the various levels of government. Therefore, in accordance with Executive Order 12612, it is determined that this final rule does not have sufficient federalism implications to warrant the preparation of a Federalism Assessment.

For the reasons discussed above, I certify that this action (1) is not a ''significant regulatory action'' under Executive Order 12866; (2) is not a ''significant rule'' under DOT Regulatory Policies and Procedures (44 FR 11034, February 26, 1979); and (3) will not have a significant economic impact, positive or negative, on a substantial number of small entities under the criteria of the Regulatory Flexibility Act. A final evaluation has been prepared for this action and it is contained in the Rules Docket. A copy of it may be obtained from the Rules Docket at the location provided under the caption **ADDRESSES**.

List of Subjects in 14 CFR Part 39

Air transportation, Aircraft, Aviation safety, Incorporation by reference, Safety.

Adoption of the Amendment

Accordingly, pursuant to the authority delegated to me by the Administrator, the Federal Aviation Administration amends part 39 of the Federal Aviation Regulations (14 CFR part 39) as follows:

PART 39—AIRWORTHINESS DIRECTIVES

1. The authority citation for part 39 continues to read as follows:

Authority: 49 U.S.C. 106(g), 40113, 44701.

§ 39.13 [Amended]

2. Section 39.13 is amended by adding a new airworthiness directive to read as follows:

AD 98–10–04 Eurocopter France: Amendment 39–10515. Docket No. 97–SW–49–AD.

Applicability: SA–365N1, AS–365N2, and SA–366G1 model helicopters, with tail rotor blade (blade), Part Number 365A12–010-all dash numbers, 365A12–0020–00, 365A33–2131-all dash numbers, or 365A12–0020–20, installed, certificated in any category.

Note 1: This AD applies to each helicopter identified in the preceding applicability provision, regardless of whether it has been modified, altered, or repaired in the area subject to the requirements of this AD. For helicopters that have been modified, altered, or repaired so that the performance of the requirements of this AD is affected, the owner/operator must use the authority provided in paragraph (c) to request approval from the FAA. This approval may address either no action, if the current configuration eliminates the unsafe condition, or different actions necessary to address the unsafe condition described in this AD. Such a request should include an assessment of the effect of the changed configuration on the unsafe condition addressed by this AD. In no case does the presence of any modification, alteration, or repair remove any helicopter from the applicability of this AD.

Compliance: Required as indicated, unless accomplished previously.

To detect cracks that could lead to delamination of the tail rotor blade Kevlar tie-bar (Kevlar tie-bar), loss of tail rotor control, and subsequent loss of control of the helicopter, accomplish the following:

(a) Within 10 hours time-in-service (TIS) after the effective date of this AD, and thereafter at intervals not to exceed 250 hours TIS, inspect each Kevlar tie-bar for a crack or delamination in accordance with paragraph B, perational Procedure, of Eurocopter France Service Bulletin 05.00.34, Revision 3, dated November 14, 1996.

(b) If any delamination or cracking is found during any of the inspections required by paragraph (a) of this AD, remove the blade and replace it with an airworthy blade before further flight.

(c) An alternative method of compliance or adjustment of the compliance time that provides an acceptable level of safety may be used if approved by the Manager, Rotorcraft Standards Staff, Rotorcraft Directorate, FAA. Operators shall submit their requests through

an FAA Principal Maintenance Inspector, who may concur or comment and then send it to the Manager, Rotorcraft Standards Staff.

Note 2: Information concerning the existence of approved alternative methods of compliance with this AD, if any, may be obtained from the Rotorcraft Standards Staff.

(d) Special flight permits may be issued in accordance with sections 21.197 and 21.199 of the Federal Aviation Regulations (14 CFR 21.197 and 21.199) to operate the helicopter to a location where the requirements of this AD can be accomplished.

(e) The inspections and replacement, if necessary, shall be done in accordance with Eurocopter France Service Bulletin 05.00.34, Revision 3, dated November 14, 1996. This incorporation by reference was approved by the Director of the Federal Register in accordance with 5 U.S.C. 552(a) and 1 CFR part 51. Copies may be obtained from American Eurocopter Corporation, 2701 Forum Drive, Grand Prairie, Texas 75053–4005, telephone (972) 641–3460, fax (972) 641–3527. Copies may be inspected at the FAA, Office of the Regional Counsel, Southwest Region, 2601 Meacham Blvd., Room 663, Fort Worth, Texas; or at the Office of the Federal Register, 800 North Capitol Street, NW., suite 700, Washington, DC.

(f) This amendment becomes effective on June 11, 1998.

Note 3: The subject of this AD is addressed in Direction Generale De L'Aviation Civile (France) AD 92–185–033(B)R4 dated December 4, 1996.

Issued in Fort Worth, Texas, on April 30, 1998.

Eric Bries,

Acting Manager, Rotorcraft Directorate, Aircraft Certification Service.

[FR Doc. 98–12114 Filed 5–6–98; 8:45 am]

BILLING CODE 4910–13–P

DEPARTMENT OF TRANSPORTATION

Federal Aviation Administration

14 CFR Part 97

[Docket No. 29214; Amdt. No. 1866]

RIN 2120–AA65

Standard Instrument Approach Procedures; Miscellaneous Amendments

AGENCY: Federal Aviation Administration (FAA), DOT.

ACTION: Final rule.

SUMMARY: This amendment establishes, amends, suspends, or revokes Standard Instrument Approach Procedures (SIAPs) for operations at certain airports. These regulatory actions are needed because of the adoption of new or revised criteria, or because of changes occurring in the National Airspace System, such as the commissioning of new navigational facilities, addition of new obstacles, or changes in air traffic requirements. These changes are designed to provide safe and efficient use of the navigable airspace and to promote safe flight operations under instrument flight rules at the affected airports.

DATES: An effective date for each SIAP is specified in the amendatory provisions.

Incorporation by reference-approved by the Director of the Federal Register on December 31, 1980, and reapproved as of January 1, 1982.

ADDRESSES: Availability of matters incorporated by reference in the amendment is as follows:

For Examination—

1. FAA Rules Docket, FAA Headquarters Building, 800 Independence Avenue, SW., Washington, DC 20591;

2. The FAA Regional Office of the region in which the affected airport is located; or

3. The Flight Inspection Area Office which originated the SIAP.

For Purchase—Individual SIAP copies may be obtained from:

1. FAA Public Inquiry Center (APA–200), FAA Headquarters Building, 800 Independence Avenue, SW., Washington, DC 20591; or

2. The FAA Regional Office of the region in which the affected airport is located.

By Subscription—Copies of all SIAPs, mailed once every 2 weeks, are for sale by the Superintendent of Documents, U.S. Government Printing Office, Washington, DC 20402.

FOR FURTHER INFORMATION CONTACT: Paul J. Best, Flight Procedures Standards Branch (AFS–420), Technical Programs Division, Flight Standards Service, Federal Aviation Administration, 800 Independence Avenue, SW., Washington, DC 20591; telephone (202) 267–8277.

SUPPLEMENTARY INFORMATION: This amendment to part 97 of the Federal Aviation Regulations (14 CFR part 97) establishes, amends, suspends, or revokes Standard Instrument Approach Procedures (SIAPs). The complete regulatory description of each SIAP is contained in official FAA form documents which are incorporated by reference in this amendment under 5 U.S.C. 552(a), 1 CFR part 51, and § 97.20 of the Federal Aviation Regulations (FAR). The applicable FAA Forms are identified as FAA Forms 8260–3, and 8260–4, and 8260–5. Materials incorporated by reference are available for examination or purchase as stated above.

The large number of SIAPs, their complex nature, and the need for a special format make their verbatim publication in the **Federal Register** expensive and impractical. Further, airmen do not use the regulatory text of the SIAPs, but refer to their graphic depiction on charts printed by publishers of aeronautical materials. Thus, the advantages of incorporation by reference are realized and publication of the complete description of each SIAP contained in FAA form documents is unnecessary. The provisions of this amendment state the affected CFR (and FAR) sections, with the types and effective dates of the SIAPs. This amendment also identifies the airport, its location, the procedure identification and the amendment number.

The rule

This amendment to part 97 is effective upon publication of each separate SIAP as contained in the transmittal. Some SIAP amendments may have been previously issued by the FAA in a National Flight Data Center (FDC) Notice to Airmen (NOTAM) as an emergency action of immediate flight safety relating directly to published aeronautical charts. The circumstances which created the need for some SIAP amendments may require making them effective in less than 30 days. For the remaining SIAPs, an effective date at least 30 days after publication is provided.

Further, the SIAPs contained in this amendment are based on the criteria contained in the U.S. Standard for Terminal Instrument Approach Procedures (TERPs). In developing these SIAPs, the TERPS criteria were applied to the conditions existing or anticipated at the affected airports. Because of the close and immediate relationship between these SIAPs and safety in air commerce, I find that notice and public procedure before adopting these SIAPs are impracticable and contrary to the public interest and, where applicable, that good cause exists for making some SIAPs effective in less than 30 days.

The FAA has determined that this regulation only involves an established body of technical regulations for which frequent and routine amendments are necessary to keep them operationally current. It, therefore—(1) is not a ''significant regulatory action'' under Executive Order 12866; (2) is not a ''significant rule'' under DOT Regulatory Policies and Procedures (44 FR 11034; February 26, 1979); and (3) does not warrant preparation of a regulatory evaluation as the anticipated impact is so minimal. For the same

reason, the FAA certifies that this amendment will not have a significant economic impact on a substantial number of small entities under the criteria of the Regulatory Flexibility Act.

List of Subjects in 14 CFR part 97

Air Traffic Control, Airports, Navigation (Air).

Issued in Washington, DC on May 1, 1998.

Tom E. Stuckey,

Acting Director, Flight Standards Service.

Adoption of the Amendment

Accordingly, pursuant to the authority delegated to me, part 97 of the Federal Aviation Regulations (14 CFR part 97) is amended by establishing, amending, suspending, or revoking Standard Instrument Approach Procedures, effective at 0901 UTC on the dates specified, as follows:

Part 97—STANDARD INSTRUMENT APPROACH PROCEDURES

1. The authority citation for part 97 is revised to read as follows:

Authority: 49 U.S.C. 106(g), 40103, 40113, 40120, 44701; and 14 CFR 11.49(b)(2).

2. Part 97 is amended to read as follows:

§§ 97.23, 97.25, 97.27, 97.29, 97.31, 97.33, 97.35 [Amended]

By amending: § 97.23 VOR, VOR/DME, VOR or TACAN, and VOR/DME or TACAN; § 97.25 LOC, LOC/DME, LDA, LDA/DMA, SDF, SDF/DME; § 97.27 NDB, NDB/DME; § 97.29 ILS, ILS/DME, ISMLS, MLS, MLS/DME, MLS/RNAV; § 97.31 RADAR SIAPs; § 97.33 RNAV SIAPs; and § 97.35 COPTER SIAPs, identified as follows:

* * * Effective June 18, 1998

Anchorage, AK, Anchorage Intl, RADAR–1, Amdt 9A, CANCELLED
McGrath, AK, McGrath, GPS RWY 16, Orig
Albertville, AL, The Albertville Muni-Thomas J Brumlik Fld, GPS RWY 5, Orig
Greenville, AL, Greenville Muni, GPS RWY 14, Orig
Greenville, AL, Greenville Muni, GPS RWY 32, Orig
McCall, ID, McCall, GPS RWY 34, Orig
McCall, ID, McCall, NDB RWY 34, Orig
McCall, ID, McCall, NDB OR GPS–A, Orig, CANCELLED
Osceola, IA, Osceola Muni, GPS RWY 18, Orig
Osceola, IA, Osceola Muni, GPS RWY 36, Orig
Vinton, IA, Vinton Veterans Meml Arpk, NDB RWY 27, Amdt 4
Vinton, IA, Vinton Veterans Meml Arpk, GPS RWY 9 Orig
Vinton, IA, Vinton Veterans Meml Arpk, GPS RWY 27, Orig
Atchison, KS, Amelia Earhart, VOR/DME OR GPS–A, Amdt 3, CANCELLED
Atchison, KS, Amelia Earhart, VOR/DME RNAV OR GPS RWY 16, Amdt 4
Atchison, KS, Amelia Earhart, VOR/DME RWY 16, Orig
Hagerstown, MD Washington County Regional, ILS RWY 27, Amdt 8
Newberry, MI, Luce County, VOR OR GPS RWY 11, Amdt 11
Newberry, MI, Luce County, VOR OR GPS RWY 29, Amdt 11
Minneapolis, MN, Minneapolis-St. Paul Intl/Wold Chamberlain, ILS PRM RWY 12L, (Simultaneous Close Parallel), Amdt 2
Minneapolis, MN, Minneapolis-St. Paul Intl/Wold Chamberlain, ILS PRM RWY 12R, (Simultaneous Close Parallel), Amdt 2
Minneapolis, MN, Minneapolis-St. Paul Intl/Wold Chamberlain, ILS PRM RWY 30L, (Simultaneous Close Parallel), Amdt 3
Minneapolis, MN, Minneapolis-St. Paul Intl/Wold Chamberlain, ILS PRM RWY 30R, (Simultaneous Close Parallel), Amdt 3
Perryville, MO, Perryville Muni, VOR/DME RNAV OR GPS RWY 20, Amdt 3
Burwell, NE, Cram Field, NDB RWY 15, Orig
Burwell, NE, Cram Field, NDB OR GPS RWY 15, Amdt 4, CANCELLED
Burwell, NE, Cram Field, GPS RWY 33, Orig
Batavia, NY, Genesee County, VOR/DME OR GPS–A, Amdt 5
Batavia, NY, Genesee County, ILS RWY 28, Amdt 4
Fulton, NY, Oswego County, GPS RWY 24, Orig
Palmyra, NY, Palmyra Airpark, VOR OR GPS–A, Amdt 1
Philadelphia, PA, Northeast Philadelphia, GPS RWY 15, Orig
Philadelphia, PA, Northeast Philadelphia, GPS RWY 33, Orig
Pittsburgh, PA, Pittsburgh Intl, ILS RWY 10L, Amdt 23
Providence, RI, Theodore Francis Green State, ILS RWY 5, Amdt 16
Providence, RI, Theodore Francis Green State, ILS RWY 23, Amdt 4
Fort Worth, TX, Fort Worth Meacham Intl, NDB OR GPS RWY 34R, Amdt 6, CANCELLED
Fort Worth, TX, Fort Worth Meacham Intl, GPS RWY 34R, Orig
Fort Atkinson, WI, Fort Atkinson, GPS RWY 3, Orig
Ravenswood, WV, Jackson County, GPS RWY 4, Orig
Ravenswood, WV, Jackson County, GPS RWY 22, Orig

* * * Effective AUGUST 13, 1998

Helena/West Helena, AR, Thompson-Robbins, NDB RWY 17, Amdt 5

[FR Doc. 98–12135 Filed 5–6–98; 8:45 am]

BILLING CODE 4910–13–M

DEPARTMENT OF TRANSPORTATION

Federal Aviation Administration

14 CFR Part 97

[Docket No. 29215; Amdt. No. 1867]

RIN 2120–AA65

Standard Instrument Approach Procedures; Miscellaneous Amendments

AGENCY: Federal Aviation Administration (FAA), DOT.

ACTION: Final rule.

SUMMARY: This amendment establishes, amends, suspends, or revokes Standard Instrument Approach Procedures (SIAPs) for operations at certain airports. These regulatory actions are needed because of changes occurring in the National Airspace System, such as the commissioning of new navigational facilities, addition of new obstacles, or changes in air traffic requirements. These changes are designed to provide safe and efficient use of the navigable airspace and to promote safe flight operations under instrument flight rules at the affected airports.

DATES: An effective date for each SIAP is specified in the amendatory provisions.

Incorporation by reference—approved by the Director of the Federal Register on December 31, 1980, and reapproved as of January 1, 1982.

ADDRESSES: Availability of matter incorporated by reference in the amendment is as follows:

For Examination—

1. FAA Rules Docket, FAA Headquarters Building, 800 Independence Avenue, SW., Washington, DC 20591;

2. The FAA Regional Office of the region in which affected airport is located; or

3. The Flight Inspection Area Office which originated the SIAP.

For Purchase—Individual SIAP copies may be obtained from:

1. FAA Public Inquiry Center (APA–200), FAA Headquarters Building, 800 Independence Avenue, SW., Washington, DC 20591; or

2. The FAA Regional Office of the region in which the affected airport is located.

By Subscription—Copies of all SIAPs, mailed once every 2 weeks, are for sale

by the Superintendent of Documents, U.S. Government Printing Office, Washington, DC 20402.

FOR FURTHER INFORMATION CONTACT:

Paul J. Best, Flight Procedures Standards Branch (AFS–420), Technical Programs Division, Flight Standards Service, Federal Aviation Administration, 800 Independence Avenue, SW., Washington, DC 20591; telephone (202) 267–8277.

SUPPLEMENTARY INFORMATION: This amendment to part 97 of the Federal Aviation Regulations (14 CFR part 97) establishes, amends, suspends, or revokes Standard Instrument Approach Procedures (SIAPs). The complete regulatory description on each SIAP is contained in the appropriate FAA Form 8260 and the National Flight Data Center (FDC—/Permanent (P) Notices to Airmen (NOTAM) which are incorporated by reference in the amendment under 5 U.S.C. 552(a), 1 CFR part 51, and § 97.20 of the Federal Aviation Regulations (FAR). Materials incorporated by reference are available for examination or purchase as stated above.

The large numbers of SIAPs, their complex nature, and the need for a special format make their verbatim publication in the **Federal Register** expensive and impractical. Further, airmen do not use the regulatory text of the SIAPs, but refer to their graphic depiction of charts printed by publishers of aeronautical materials. Thus, the advantages of incorporation by reference are realized and publication of the complete description of each SIAP contained in FAA form documents is unnecessary. The provisions of this amendment state the affected CFR (and FAR) sections, with the types and effective dates of the SIAPs. This amendment also identifies the airport, its location, the procedure identification and the amendment number.

The Rule

This amendment to part 97 of the Federal Aviation Regulations (24 CFR part 97) establishes, amends, suspends, or revokes SIAPs. For safety and timeliness of change considerations, this amendment incorporates only specific changes contained in the content of the following FDC/P NOTAM for each SIAP. The SIAP information in some previously designated FDC/Temporary (FDC/T) NOTAMs is of such duration as to be permanent. With conversion to FDC/P NOTAMs, the respective FDC/T NOTAMs have been cancelled.

The FDC/P NOTAMs for the SIAPs contained in this amendment are based on the criteria contained in the U.S. Standard for Terminal Instrument Approach Procedures (TERPS). In developing these chart changes to SIAPs by FDC/P NOTAMs, the TERPS criteria were applied to only these specific conditions existing at the affected airports. All SIAP amendments in this rule have been previously issued by the FAA in a National Flight Data Center (FDC) Notice to Airmen (NOTAM) as an emergency action of immediate flight safety relating directly to published aeronautical charts. The circumstances which created the need for all these SIAP amendments requires making them effective in less than 30 days.

Further, the SIAPs contained in this amendment are based on the criteria contained in the TERPS. Because of the close and immediate relationship between these SIAPs and safety in air commerce, I find that notice and public procedure before adopting these SIAPs are impracticable and contrary to the public interest and, where applicable, that good cause exists for making these SIAPs effective in less than 30 days.

Conclusion

The FAA has determined that this regulation only involves an established body of technical regulations for which frequent and routine amendments are necessary to keep them operationally current. It, therefore—(1) is not a ''significant regulatory action'' under Executive Order 12866; (2) is not a ''significant rule'' under DOT Regulatory Policies and Procedures (44 FR 11034; February 26, 1979); and (3) does not warrant preparation of a regulatory evaluation as the anticipated impact is so minimal. For the same reason, the FAA certifies that this amendment will not have a significant economic impact on a substantial number of small entities under the criteria of the Regulatory Flexibility Act.

List of Subjects in 14 CFR Part 87

Air Traffic Control, Airports, Navigation (Air).

Issued in Washington, DC, on May 1, 1998.

Tom E. Stuckey,

Acting Director, Flight Standards Service.

Adoption of the Amendment

Accordingly, pursuant to the authority delegated to me, part 97 of the Federal Aviation Regulations (14 CFR part 97) is amended by establishing, amending, suspending, or revoking Standard Instrument Approach Procedures, effective at 0901 UTC on the dates specified, as follows:

PART 97—STANDARD INSTRUMENT APPROACH PROCEDURES

1. The authority citation for part 97 is revised to read as follows:

Authority: 49 U.S.C. 40103, 40113, 40120, 44701; 49 U.S.C. 106(g); and 14 CFR 11.49(b)(2).

2. Part 97 is amended to read as follows:

§§ 97.23, 97.25, 97.27, 97.29, 97.31, 97.33, 97.35 [Amended]

By amending: § 97.23 VOR, VOR/DME, VOR or TACAN, and VOR/DME or TACAN; § 97.25 LOC LOC/DME, LDA, LDA/DME, SDF/DME; § 97.27 NDB, NDB/DME; § 97.29 ILS ILS/DME, ISMLS, MLS, MLS/DME, MLS/RNAV; § 97.31 RADAR SIAPs; § 97.33 RNAV SIAPs; and § 97.35 COPTER SIAPs, identified as follows:

* * * *Effective Upon Publication*

FDC Date	State	City	Airport	FDC Number	SIAP
04/17/98	PA	Coatesville.	Chester County G.O. Carlson	FDC 8/2299	LS RWY 29 AMDT 6A
04/20/98	LA	New Orleans.	New Orleans Intl (Moisant Field)	FDC 8/2332	ILS RWY 1, AMDT 16A
04/21/98	VA	Abingdon	Virginia Highlands	FDC 8/2361	VOR/DME OR GPS–B AMDT 5
04/22/98	TN	Nashville	Nashville Intl	FDC 8/2382	LS RWY 2C ORIG–A
04/23/98	AR	West Memphis.	West Memphis Muni	FDC 8/2426	GPS RWY 17, ORIG

FDC Date	State	City	Airport	FDC Number	SIAP
04/23/98	AR	West Memphis.	West Memphis Muni	FDC 8/2427	NDB RWY 17, AMDT 10
04/23/98	IN	North Vernon.	North Vernon	FDC 8/2421	GPS RWY 23, ORIG
04/23/98	MD	Salisbury	Ocean City Wicomico Regional	FDC 8/2416	ILS RWY 32, AMDT 5A
04/23/98	NC	Charlotte	Charlotte/Douglas Intl	FDC 8/2397	ILS RWY 36R (CAT I,II AND III), AMDT 8
04/23/98	NH	Concord	Concord Muni	FDC 8/2429	ILS RWY 35, AMDT 1
04/23/98	NJ	Teterboro	Teterboro	FDC 8/2399	ILS RWY 6, AMDT 28
04/23/98	NJ	Teterboro	Teterboro	FDC 8/2400	COPTER ILS RWY 6, ORIG
04/23/98	NJ	Teterboro	Teterboro	FDC 8/2401	NDB OR GPS RWY 6, AMDT 17A
04/23/98	NJ	Teterboro	Teterboro	FDC 8/2402	VOR/DME OR GPS–B, AMDT 2
04/23/98	VA	Franklin	Franklin Muni–John Beverly Rose	FDC 8/2442	VOR/DME OR GPS RWY 27, AMDT 9
04/23/98	WV	Charleston.	Yeager	FDC 8/2415	ILS RWY 5, AMDT 4
04/24/98	LA	New Orleans.	New Orleans Intl (Moisant Field)	FDC 8/2468	LOC RWY 19, ORIG
04/24/98	NH	Lebanon	Lebanon Muni	FDC 8/2463	ILS RWY 18 AMDT 4
04/27/98	NY	New York	John F. Kennedy Intl	FDC 8/2536	ILS RWY 31L AMDT 9A
04/28/98	FL	Jacksonville.	Jacksonville Intl	FDC 8/2567	ILS RWY 25 ORIG–A
04/28/98	TN	Jackson	McKellar-Sipes Regional	FDC 8/2568	LOC BC RWY 20 AMDT 5A
04/23/98	DH	Whitefield.	Mount Washington Regional	FDC 8/2430	LOC RWY 10, AMDT 4

[FR Doc. 98–12134 Filed 5–6–98; 8:45 am]
BILLING CODE 4910–13–M

DEPARTMENT OF HEALTH AND HUMAN SERVICES

Food and Drug Administration

21 CFR Parts 510 and 529

Certain Other Dosage Form New Animal Drugs; Competitive Exclusion Culture

AGENCY: Food and Drug Administration, HHS.

ACTION: Final rule.

SUMMARY: The Food and Drug Administration (FDA) is amending the animal drug regulations to reflect approval of a new animal drug application (NADA) filed by BioScience Division of Milk Specialties Co. The NADA provides for use of a competitive exclusion culture (lyophilized bacterial cultures) for early establishment of intestinal microflora in chickens to reduce *Salmonella* colonization.

EFFECTIVE DATE: May 7, 1998.

FOR FURTHER INFORMATION CONTACT: Naba K. Das, Center for Veterinary Medicine (HFV–133), Food and Drug Administration, 7500 Standish Pl., Rockville, MD 20855, 301–594–1659.

SUPPLEMENTARY INFORMATION: BioScience Division of Milk Specialties Co., Illinois and Water Sts., P.O. Box 278, Dundee, IL 60118, is sponsor of NADA 141–101 that provides for the use of Preempt™, a competitive exclusion culture (lyophilized bacterial cultures), for the early establishment of intestinal microflora in chickens to reduce *Salmonella* colonization. The NADA is approved as of March 13, 1998, and the regulations are amended by adding 21 CFR 529.469 to reflect the approval. The basis of approval is discussed in the freedom of information summary.

In addition, BioScience Division of Milk Specialties Co. has not been previously listed in the animal drug regulations as sponsor of an approved application. At this time, 21 CFR 510.600(c)(1) and (c)(2) are amended to add entries for the firm.

In accordance with the freedom of information provisions of 21 CFR part 20 and 514.11(e)(2)(ii), a summary of safety and effectiveness data and information submitted to support approval of this application may be seen in the Dockets Management Branch (HFA–305), Food and Drug Administration, 12420 Parklawn Dr., rm. 1–23, Rockville, MD 20857, between 9 a.m. and 4 p.m., Monday through Friday.

Under section 512(c)(2)(F)(i) of the Federal Food, Drug, and Cosmetic Act (21 U.S.C. 360b(c)(2)(F)(i)), this approval for food-producing animals qualifies for 5 years of marketing exclusivity beginning March 13, 1998, because no active ingredient (including any salt or ester of the active ingredient) has been approved in any other application.

The agency has determined under 21 CFR 25.33(c) that this action is of a type that does not individually or cumulatively have a significant effect on the human environment. Therefore, neither an environmental assessment nor an environmental impact statement is required.

List of Subjects

21 CFR Part 510

Administrative practice and procedure, Animal drugs, Labeling,

Reporting and recordkeeping requirements.

21 CFR Part 529

Animal drugs.

Therefore, under the Federal Food, Drug, and Cosmetic Act and under authority delegated to the Commissioner of Food and Drugs and redelegated to the Center for Veterinary Medicine, 21 CFR parts 510 and 529 are amended as follows:

PART 510—NEW ANIMAL DRUGS

1. The authority citation for 21 CFR part 510 continues to read as follows:

Authority: 21 U.S.C. 321, 331, 351, 352, 353, 360b, 371, 379e.

2. Section 510.600 is amended in the table in paragraph (c)(1) by alphabetically adding an entry for ''BioScience Division of Milk Specialties Co.''and in paragraph (c)(2) by numerically adding an entry for ''032761'' to read as follows:

§ 510.600 Names, addresses, and drug labeler codes of sponsors of approved applications.

* * * * *

(c) * * *

(1) * * *

Firm name and address	Drug labeler code
* * * *	* * *
BioScience Division of Milk Specialties Co., Illinois and Water Sts., P.O. Box 278, Dundee, IL 60118	032761
* * * *	* * *

(2) * * *

Drug labeler code	Firm name and address
* * *	* * * *
032761	BioScience Division of Milk Specialties Co., Illinois and Water Sts., P.O. Box 278, Dundee, IL 60118.
* * *	* * * *

PART 529—CERTAIN OTHER DOSAGE FORM NEW ANIMAL DRUGS

1. The authority citation for 21 CFR part 529 continues to read as follows:

Authority: 21 U.S.C. 360b.

2. Section 529.469 is added to read as follows:

§ 529.469 Competitive exclusion culture.

(a) *Specifications.* Each packet of lyophilized culture contains either 2,000 or 5,000 doses in frozen pellets to be reconstituted for use.

(1) For 2,000-dose packet, add contents of one 2,000-dose packet of reconstitution powder to 490 milliliters of deionized water. Mix. Add contents of one 2,000-dose packet of lyophilized culture. Mix thoroughly.

(2) For 5,000-dose packet, add contents of one 5,000-dose packet of reconstitution powder to 1,250 milliliters of deionized water. Mix. Add contents of one 5,000-dose packet of lyophilized culture. Mix thoroughly. Allow to stand for 45 minutes before use. Use within 5 hours of reconstitution.

(b) *Sponsor.* See No. 032761 in § 510.600(c) of this chapter.

(c) [Reserved]

(d) *Conditions of use. Chickens*—(1) *Amount.* Apply 25 milliliters of reconstituted culture as a topical spray on each tray of 100 chicks (0.25 milliliter per chick).

(2) *Indications for use.* For early establishment of intestinal microflora in chickens to reduce *Salmonella* colonization.

(3) *Limitations.* Administer as soon as possible after hatch, preferably at less than 1 day of age. Expose chicks to light for at least 5 minutes after spray treatment to encourage preening for oral uptake of the organisms. Provide access to feed and water as soon as possible after treatment. Do not administer antibiotics to treated chickens.

Dated: April 22, 1998.

Stephen F. Sundlof,

Director, Center for Veterinary Medicine.

[FR Doc. 98–12056 Filed 5–6–98; 8:45 am]

BILLING CODE 4160–01–F

DEPARTMENT OF TRANSPORTATION

Coast Guard

33 CFR Part 165

[CGD01–08–015]

RIN 2115–AA97

Safety Zone; Greenwood Lake Powerboat Classic, Greenwood Lake, New Jersey

AGENCY: Coast Guard, DOT.

ACTION: Temporary final rule.

SUMMARY: The Coast Guard is establishing a temporary safety zone for a powerboat race located on Greenwood Lake, New Jersey. This safety zone is in effect from 10 a.m. until 7 p.m. on Saturday, May 16, and Sunday, May 17, 1998. This action is necessary to provide for the safety of life on navigable waters during the event. This action is intended to restrict vessel traffic in the southern end of Greenwood Lake, New Jersey.

DATES: This temporary final rule is effective from 10 a.m. until 7 p.m. on Saturday, May 16, and Sunday, May 17, 1998.

ADDRESSES: Comments may be mailed to the Waterways Oversight Branch (CGD01–98–015), Coast Guard Activities New York, 212 Coast Guard Drive, Staten Island, New York 10305, or deliver them to room 205 at the same address between 8 a.m. and 3 p.m., Monday through Friday, except Federal holidays.

The Waterways Oversight Branch of Coast Guard Activities New York maintains the public docket for this rulemaking. Comments, and documents as indicated in this preamble, will become part of this docket and will be available for inspection or copying at room 205, Coast Guard Activities New York, between 8 a.m. and 3 p.m., Monday through Friday, except Federal holidays.

FOR FURTHER INFORMATION CONTACT: Lieutenant (Junior Grade) Alma Kenneally, Waterways Oversight Branch, Coast Guard Activities New York (718) 354–4195.

SUPPLEMENTARY INFORMATION:

Regulatory History

Purusant to 5 U.S.C. 553, a notice of proposed rulemaking (NPRM) was not published for this regulation. Good cause exists for not publishing an NPRM and for making this regulation effective less than 30 days after **Federal Register** publication. Due to the date this application was received, there was insufficient time to draft and publish an NPRM. Any delay encountered in this regulation's effective date would be contrary to public interest since immediate action is needed to close a portion of the waterway and protect the maritime public from the hazards associated with high speed power boats racing in confined waters.

Background and Purpose

The Greenwood Lake Powerboat Association and the West Milford Chamber of Commerce submitted an Application For Approval of Marine Event to hold a powerboat race on the waters of Greenwood Lake. This safety zone encompasses all waters of Greenwood Lake, New Jersey, south of 41°09′ N, and north of 41°08′ N (NAD 1983). The northern boundary will be marked by 6 temporary buoys. The southern boundary will be marked by four temporary buoys. The shoreline comprises the eastern and western boundaries. The safety boundaries. The safety zone is in effect from 10 a.m. until 7 p.m. on Saturday, May 16, and Sunday, May 17, 1998. This safety zone prohibits all vessels not participating in the event from transiting this portion of Greenwood Lake and is needed to protect boaters from the hazards associated with high speed powerboats racing in confined waters. Participating vessels include race participants and race committee craft. All other vessels, swimmers, and personal watercraft of any nature are prohibited from entering or moving within the safety zone.

Regulatory Evaluation

This final rule is not a significant regulatory action under section 3(f) of Executive Order 12866 and does not require an assessment of potential costs and benefits under section 6(a)(3) of that Order. It has not been reviewed by the Office of Management and Budget under that Order. It is not significant under the regulatory policies and procedures of the Department of Transportation (DOT) (44 FR 11040 February 26, 1979). The Coast Guard expects the economic impact of this final rule to be so minimal that a full Regulatory Evaluation under paragraph 10e of the regulatory policies and procedures of DOT is unnecessary. This safety zone will restrict vessel traffic in the south end of Greenwood Lake, New Jersey on Saturday, May 16, and Sunday, May 17, 1998, from 10 a.m. until 7 p.m., unless extended or terminated sooner by the Captain of the Port, New York. Although this regulation prevents traffic from transiting this area, the effect of this regulation will not be significant for several reasons: the limited duration of the race, the event is taking place of an inland lake which has no commercial traffic, it is an annual event with local support, and notifications will be made to the local maritime community via facsimile. Vessels, swimmers, and personal watercraft of any nature not participating in this event, will be unable to transit through, or around, the safety zone during this event.

Small Entities

Under the Regulatory Flexibility Act (5 U.S.C. 601 *et seq.*), the Coast Guard considered whether this rule will have a significant economic impact on a substantial number of small entities. ''Small entities'' include small businesses, not-for-profit organizations that are independently owned and operated and are not dominant in their fields, and governmental jurisdictions with populations of less than 50,000.

For reasons discussed in the Regulatory Evaluation above, the Coast Guard certifies under section 605(b) of the Regulatory Flexibility Act (5 U.S.C. 601 *et seq.*) that this final rule will not have a significant economic impact on a substantial number of small entities. If, however, you think that your business or organization qualifies as a small entity and that this rule will have significant economic impact on your business or organization, please submit a comment explaining why you think it qualifies and in what way and to what degree this rule will economically effect it.

Collection of Information

This final rule does not provide for a collection of information under the Paperwork Reduction Act of 1995 (44 U.S.C. 3501 *et seq*).

Federalism

The Coast Guard has analyzed this final rule under the principles and criteria contained in Executive Order 12612 and has determined that this final rule does not have sufficient implications for federalism to warrant the preparation of a Federalism Assessment.

Environment

The Coast Guard considered the environmental impact of this final rule and concluded that under Figure 2–1, paragraph 34(g), of Commandant Instruction M16475.1C, this final rule is categorically excluded from further environmental documentation. A ''Categorical Exclusion Determination'' is available in the docket for inspection or copying where indicated under **ADDRESSES**.

List of Subjects in 33 CFR part 165

Harbors, Marine safety, Navigation (water), Reporting and recordkeeping requirements, Security measures, Waterways.

Regulation

For the reasons discussed in the preamble, the Coast Guard amends 33 CFR part 165, as follows:

PART 165—[AMENDED]

1. The authority citation for part 165 continues to read as follows:

Authority: 33 U.S.C. 1231; 50 U.S.C. 191; 33 CFR 1.05–1(g), 6.04–1, 6.04–6, and 160.5; 49 CFR 1.46.

2. Add temporary 165.T01–015 to read as follows:

§ 165.T01–015 Safety Zone: Greenwood Lake Powerboat Classic, Greenwood Lake, NJ.

(a) *Location*. The following area is a safety zone: all waters of Greenwood Lake, NJ, south of 41°09′N, and north of 41°08′N (NAD 1983). The shoreline comprises the eastern and western boundaries.

(b) *Effective period*. This section is effective from 10 a.m. until 7 p.m. on

Saturday, May 16, and Sunday, May 17, 1998.

(c) *Regulations.*

(1) The general regulations contained in 33 CFR 165.23 apply to this safety zone.

(2) Vessels not participating in this event, swimmers, and personal watercraft of any nature are prohibited from entering or moving within the safety zone.

(3) All persons and vessels shall comply with the instructions of the Coast Guard Captain of the Port or the designated on scene patrol personnel. U.S. Coast Guard patrol personnel include commissioned, warrant, and petty officers of the Coast Guard. Upon being hailed by a U.S. Coast Guard vessel via siren, radio, flashing light, or other means, the operator of a vessel shall proceed as directed.

Dated: April 20, 1998.

R.C. Vlaun,

Captain, U.S. Coast Guard, Captain of the Port, New York.

[FR Doc. 98–12139 Filed 5–6–98; 8:45 am]

BILLING CODE 4910–15–M

POSTAL SERVICE

39 CFR Part 241

Expansion, Relocation, Construction of New Post Offices

AGENCY: Postal Service.

ACTION: Interim rule.

SUMMARY: This interim rule establishes procedures by which the Postal Service notifies local citizens and public officials of facility projects, and solicits and considers the community's input before making a final decision to expand an existing facility, relocate to a new building, or start new construction. The purpose of the interim rule is to build into the facility project planning process specific opportunities and adequate time for the community to be a partner in the decision-making process and to have its views considered.

DATES: Effective: May 7, 1998. Comments must be received by June 8, 1998.

ADDRESSES: Please submit written comments to Louis Norris, Manager, Real Estate, U.S. Postal Service, Facilities, 4301 Wilson Boulevard, Suite 300, Arlington, VA 22203–1861.

FOR FURTHER INFORMATION CONTACT: John Sorenson, U.S. Postal Service, Facilities, 4301 Wilson Boulevard, Suite 300, Arlington, VA 22203–1861; phone (703) 526–2782.

SUPPLEMENTARY INFORMATION: This interim rule adds a new § 241.4 to 39 CFR part 241 to require that both local public officials and local citizens be notified and invited to comment at critical stages of the planning to enlarge or relocate a postal customer service facility. In addition, the rule requires postal officials to take into account community input, including alternative recommendations.

Throughout the towns and villages of America, people have long viewed their post office as much more than a place to send and receive mail. A community's post office is a vital part of its infrastructure—a place to greet old friends, make new ones, and exchange information. With more than 35,000 leased and owned postal facilities, the Postal Service takes seriously its commitment to be a good neighbor and a vital part of every community.

Adding new facilities and upgrading or replacing existing ones is a continuing activity that is influenced by population growth and shifts, the increasing automation of mail processing, aging and deteriorating building stock, and changing environmental and energy conservation requirements. In order to fulfill its role as a member of virtually every U.S. community, the Postal Service believes that, to the maximum extent possible, it should undertake its most locally significant projects—to relocate a post office, to build a new one, or to expand an existing facility—in partnership with the local community.

This has long been Postal Service policy. These community relations guidelines are being published to help ensure that communities and local public officials, as well as postal employees, will have the most up-to-date policy and procedures for projects that involve expansion, relocation, or new construction of a post office, and to help ensure that all such projects are handled in accordance with the guidelines.

The rule also formalizes the Postal Service's long-standing policy of complying with local zoning and land use ordinances and building codes when it can do so consistent with prudent business practices and unique postal requirements.

This interim rule reflects existing policy and procedures and, in any event, imposes no burden on members of the public; therefore, it is effective immediately. Although exempted by 39 U.S.C. 410(a) from the advance notice requirements of the Administrative Procedure Act regarding proposed rulemaking (5 U.S.C. 553), the Postal Service invites public comment at the above address and will consider any comments received before issuing a final rule.

Accordingly, the Postal Service amends, on an interim basis, 39 CFR part 241, as follows:

List of Subjects in 39 CFR Part 241

Organization and functions (Government agencies).

PART 241—[AMENDED]

1. The authority citation for 39 CFR part 241 continues to read as follows:

Authority: 39 U.S.C. 401.

2. Effective May 7, 1998, 39 CFR part 241 is amended by adding § 241.4, as follows:

§ 241.4 Expansion, relocation, and construction of post offices

(a) *Application.* (1) This section applies when the Postal Service contemplates any one of the following projects that provides retail services to customers: expansion, relocation to another existing building, or new construction, except when the project is to meet an emergency requirement or is for temporary use.

(2) This section does not apply when the project under consideration is limited to repair and alterations, such as:

(i) Painting, no matter how extensive;

(ii) Repairs, no matter how extensive;

(iii) Replacement or upgrade of structural or functional elements of a postal building or of its equipment, no matter how extensive the work;

(iv) Paving, striping, or other repair of parking areas;

(v) Landscaping.

(b) *Purpose.* The purpose of the procedures required by this section is to ensure increased opportunities for members of the communities who may be affected by certain Postal Service facility projects, along with local officials, to convey their views concerning the contemplated project and have them considered prior to any final decision to expand, relocate to another existing building, or construct a new building.

(c) *Expansion, relocation, new construction.* When an expansion, relocation, or new construction of a retail facility (whether leased or owned) is planned, postal representatives responsible for the project will take the following steps in accordance with the time schedule shown:

(1) Personally visit one or more of the highest ranking local public officials (generally, individuals holding elective office) at least 45 days before any public advertising. During the visit, the postal representatives will:

(i) Describe the project fully, explain the process by which the Postal Service will solicit and consider input from the affected community, and solicit a working partnership with the community officials for the success of the project.

(ii) Emphasize that in meeting a need for increased space, the first priority is to expand the existing facility, the second priority is to find an existing building in the same area as the current facility, and the third option is to build on a new site that will be either owned or leased.

(iii) Ask that a Postal Service presentation of the project be placed on the regular agenda of a public meeting or hearing. If no such meeting is planned within the next 60 days or the agenda of a planned meeting cannot accommodate the project, the Postal Service will schedule a public hearing concerning the project and will advertise the hearing in a local general circulation newspaper.

(iv) Give the local officials a letter describing the intended project.

(2) Notify the lessor of the affected facility in writing.

(3) Send an initial appropriate press release to local news media.

(4) Except as provided herein, attend or conduct one or more public hearings to describe the project to the community, invite questions, solicit written comment, and describe the process by which community input will be considered. If it is known at the time that the existing facility is not able to be expanded or that expansion is impracticable, that fact will be disclosed and the project file documented as to the reasons expansion is not possible or practical. Exception: If circumstances prevent postal representatives from attending or conducting a public meeting or hearing on the planned project within a reasonable time, the Postal Service must distribute a notification card to all affected customers, seeking their comment or other feedback. In addition, if the decision is to distribute notification cards, the project file must document the circumstances that prevented postal representatives from conducting or attending a public hearing or meeting within a reasonable time; in no event shall a lack of public interest or objection constitute a qualifying circumstance.

(5) Review comments and notify local officials of decision. After the date of the most recent public meeting or the date of distribution of notification cards, make a decision (e.g., relocation to another building, new construction, or expansion of the existing facility) that takes into account community input and is consistent with prudent business practices and postal objectives, and notify local officials in writing. Take no action on the decision for at least 15 days following notification of local officials.

(6) Advertise for sites and existing buildings, in accordance with the decision.

(d) *New site or existing buildings—historic preservation.* (1) It is the policy of the Postal Service, by virtue of Board of Governors Resolution No. 82–7, to comply with Section 106 of the general provisions of the National Historic Preservation Act, (16 U.S.C. 470 *et seq.*), Executive Order 13006, and, through it, Executive Order 12072. Therefore, when the decision is to relocate to another existing building, that building will be selected in accordance with Section 106 of the National Historic Preservation Act and applicable provisions of the executive orders identified above.

(2) When the decision is to advertise for sites and existing buildings, once such sites have been identified, advise local officials of all contending sites and with respect to all sites not selected, provide an explanation.

(3) Once a site or existing building has been selected, notify local officials of the selection decision.

(4) Take no final action to acquire or lease the new location for 15 days.

(e) *Planning, zoning, building codes.* It is the policy of the Postal Service to comply with local planning and zoning requirements and building codes to the maximum extent feasible consistent with postal needs and objectives. To promote a partnership with local officials and ensure conformance with local building codes, plans and drawings will be sent to appropriate building department or other officials for review. The Postal Service will give local public officials written notice of any timely, written objections or recommendations that it does not plan to adopt or implement.

(f) *Continuing communication.* During construction, whether renovation or new construction, the postmaster will keep local officials and the community informed via letters and news releases. The postmaster and other postal officials will plan, conduct, and invite the community and local officials to any ''grand opening.''

Stanley F. Mires,

Chief Counsel, Legislative.

[FR Doc. 98–12064 Filed 5–6–98; 8:45 am]

BILLING CODE 7710–12–P

ENVIRONMENTAL PROTECTION AGENCY

40 CFR Part 52

[PA041–4069; FRL–6009–3]

Approval and Promulgation of Air Quality Implementation Plans; Pennsylvania; Conditional Limited Approval of the Pennsylvania VOC and NOx RACT Regulation; Correction

AGENCY: Environmental Protection Agency (EPA).

ACTION: Final rule; correcting amendment.

SUMMARY: This document corrects an error in the amendatory instruction in a final rule pertaining to the Pennsylvania VOC and NO_X RACT Regulation.

EFFECTIVE DATE: April 22, 1998.

FOR FURTHER INFORMATION CONTACT: Cynthia H. Stahl, (215) 566–2180 or by e-mail at stahl.cynthia@epamail.epa.gov.

SUPPLEMENTARY INFORMATION: EPA published a document on March 23, 1998 (63 FR 13789) inadvertently adding paragraph (e) to § 52.2026 when that paragraph already existed. The intent of the rule was to amend that section by adding a paragraph (f). This document corrects the erroneous amendatory language.

Correction

In the final rule published in the **Federal Register** on March 23, 1998 (63 FR 13789), on page 13794 in the third column, the fourth amendatory instruction is corrected to read—''4. Section 52.2026 is amended by adding a paragraph (f) to read as follows:'' and the new text is designated as paragraph (f).

Administrative Requirements

Under Executive Order 12866 (58 FR 51735, October 4, 1993), this action is not a ''significant regulatory action'' and, is therefore not subject to review by the Office of Management and Budget. In addition, this action does not impose any enforceable duty or contain any unfunded mandate as described in the Unfunded Mandates Reform Act of 1995 (Pub. L. 104–4), or require prior consultation with State officials as specified by Executive Order 12875 (58 FR 58093, October 28, 1993), or involve special consideration of environmental justice related issues as required by Executive Order 12898 (59 FR 7629, February 16, 1994).

Because this corrective rulemaking action is not subject to notice-and-comment requirements under the

Administrative Procedure Act or any other statute, it is not subject to the provisions of the Regulatory Flexibility Act (5 U.S.C. 601 *et seq.*).

The Congressional Review Act, 5 U.S.C. 801 *et seq.*, as added by the Small Business Regulatory Enforcement Fairness Act of 1996, generally provides that before a rule may take effect, the agency promulgating the rule must submit a rule report, which includes a copy of the rule, to each House of the Congress and to the Comptroller General of the United States. EPA will submit a report containing this rule and other required information to the U.S. Senate, the U.S. House of Representatives, and the Comptroller General of the United States prior to publication of the rule in the **Federal Register**. This rule for the Pennsylvania VOC and NOx RACT Regulation is not a ''major rule'' as defined by 5 U.S.C. 804(2).

Dated: April 27, 1998.

Andrew Carlin,

Acting Regional Administrator, Region III.

[FR Doc. 98–11878 Filed 5–6–98; 8:45 am]

BILLING CODE 6560–50–P

ENVIRONMENTAL PROTECTION AGENCY

40 CFR Part 156

[OPPTS–00238; FRL–5785–2]

Labeling Requirements for Pesticides; Respirator Compliance Policy Statement

AGENCY: Environmental Protection Agency (EPA).

ACTION: Policy statement.

SUMMARY: The National Institute for Occupational Safety and Health (NIOSH has developed changes to the regulations at 42 CFR part 84 that set forth certification standards for non-powered air-purifying particulate respirators. EPA has determined that all 42 CFR part 84 respirators meet or exceed all 30 CFR part 11 respirator (hereinafter part 11 and part 84 respirators) requirements, and that respirators certified under part 84 will be considered the equivalent of a respirator certified under part 11. EPA will allow pesticide handlers to use either part 11 or part 84 respirators to satisfy non-powered, air-purifying respirator requirements for pesticide applications. The Agency will publish an amendment to 40 CFR 156.212 to reflect the NIOSH changes in particulate respirator designations and a Pesticide Registration (PR) Notice to direct registrants on how to modify product labels.

EFFECTIVE DATE: This document is effective April 24, 1998.

FOR FURTHER INFORMATION CONTACT: Yvette Hellyer, Toxics and Pesticides Enforcement Division (2245A), Environmental Protection Agency, 401 M St., SW., Washington, DC 20460, Telephone: 202–564–4033, E-mail: hellyer.yvette@epa.gov; or, Judy Smith, Field and External Affairs Division (7506C), Office of Pesticide Programs, Environmental Protection Agency, 401 M St., SW., Washington, DC 20460, Telephone: 703–305–5621, E-mail: smith.judy@epa.gov.

I. Background

On July 10, 1995, NIOSH modified its existing regulation, 30 CFR part 11, and changed the certification standards for non-powered, air-purifying particulate filters. The NIOSH change was made to update and upgrade certification tests developed in the 1930's by the Bureau of Mines. The new regulation, 42 CFR part 84, requires that respirators certified under 42 CFR part 84 undergo a different test using a more penetrating particle size than in the past and takes into account the presence of oil in the contaminant.

The NIOSH certification changes require that manufacture and certification of part 11 respirators cease on July 10, 1998; however, distributors and other respiratory protection product sellers can continue to sell their existing supplies. In terms of additional NIOSH certification changes, canister type respirators that are certified for use with pesticides will not be made after July 10, 1998. Combination respirators, those certified for use for paints and pesticides, will also not be made after July 10, 1998. Certification requirements for all other respirator types, such as powered air-purifying respirators (PAPR) were transferred from 30 CFR part 11 to 42 CFR part 84 without change.

To minimize the impact of the manufacturing transition from part 11 to part 84 respirators, all particulate respirator manufacturers now sell part 84 respirators and are now phasing out part 11 respirators. Manufacturers cannot precisely estimate when the existing supply of part 11 respirators will be exhausted, but a general consensus in the industry estimates this will occur in 3 years.

II. NIOSH Certification Changes and EPA Determination

NIOSH certifies part 84 respirators using a more rigorous testing method, and EPA has determined that part 84 respirators provide at least as much protection to pesticide handlers, applicators, and users as part 11 respirators. As a result, a pesticide user may substitute a part 84 non-powered, air-purifying particulate respirator for a part 11 respirator even though the pesticide product label requires use of a part 11 respirator, and EPA will not initiate an enforcement action for misuse of the product. This substitution will only be allowed until the pesticide product label change from part 11 to part 84 respirator requirements have been completed. Following the pesticide product label change to part 84 respirators, this substitution will no longer apply.

III. Information for Registrants

EPA plans to require label changes for pesticide products because of the NIOSH certification changes, and this will impact pesticide registrants. EPA will issue a Pesticide Registration (PR) Notice that will call for registrants to add 42 CFR part 84 language to the existing respirator language (30 CFR part 11) on current product labels. The Agency also intends to amend 40 CFR 156.212 to incorporate the new NIOSH designations for dust/mist filtering respirators and organic vapor-removing cartridge respirators. The revised rule will affect the pesticide product labels with part 11 respirator requirements, i.e., those requiring either a Mine Safety and Health Administration (MSHA)/NIOSH-approved dust filtering respirator (known as a TC-21C) or a MSHA/NIOSH-approved organic vapor removing cartridge respirator with a prefilter approved for pesticides (MSHA/NIOSH approval number prefix TC-23C), and will require the addition of 42 CFR part 84 language to the product label.

IV. Information for Pesticide Applicators

Given that both part 11 or part 84 respirators meet respiratory protection requirements for pesticide products, the Agency is confident that allowing pesticide handlers to use part 84 respirators will assure applicators of an adequate supply of acceptable respirators.

V. Compliance and Enforcement

The Federal Insecticide, Fungicide, and Rodenticide Act (FIFRA) section 12(a)(2)(G) states that it is unlawful ''to use any registered pesticide in a manner inconsistent with its labeling.'' EPA has determined that both part 11 or part 84 respirators will provide adequate protection for users. Therefore, EPA considers the part 84 respirator to be the equivalent of part 11 respirators for the purpose of complying with the label of

pesticide products for application-related activities. EPA will not consider the substitution of a part 84 for a part 11 respirator a misuse. Furthermore, EPA requires pesticide handlers, applicators, and users to comply with all the requirements of 40 CFR 170.240 regardless of whether the respirator is part 11 or part 84.

VI. Conclusion

EPA recognizes that part 84 respirators offer applicators equivalent levels of respiratory protection, and the supply of part 11 respirators will be exhausted in the next 1 to 3 years. EPA also recognizes that pesticide handlers must have an adequate supply of respirators that provide adequate respiratory protection during application. Effective immediately, EPA will not find misuse violations against applicators who use either part 11 or part 84 respirators to satisfy existing product labels that require part 11 respirators.

VII. Regulatory Assessment Requirements

This action does not impose any requirements. As such, this action does not require review by the Office of Management and Budget (OMB) under Executive Order 12866, entitled *Regulatory Planning and Review* (58 FR 51735, October 4, 1993), the Paperwork Reduction Act (PRA), 44 U.S.C. 3501 *et seq.*, or Executive Order 13045, entitled *Protection of Children from Environmental Health Risks and Safety Risks* (62 FR 19885, April 23, 1997). For the same reason, it does not require any action under Title II of the Unfunded Mandates Reform Act of 1995 (UMRA) (Pub. L. 104-4), Executive Order 12875, entitled *Enhancing the Intergovernmental Partnership* (58 FR 58093, October 28, 1993), or Executive Order 12898, entitled *Federal Actions to Address Environmental Justice in Minority Populations and Low-Income Populations* (59 FR 7629, February 16, 1994). In addition, since this type of action does not require any proposal, no action is needed under the Regulatory Flexibility Act (RFA) (5 U.S.C. 601 *et seq.*).

VIII. Submission to Congress and the Comptroller General

The Congressional Review Act, 5 U.S.C. 801 *et seq.*, as added by the Small Business Regulatory Enforcement Fairness Act of 1996, does not apply because this action is not a rule, as that term is defined in 5 U.S.C. 804(3).

List of Subjects in Part 156

Environmental protection, Labeling, Occupational safety and health, Pesticides and pests, Reporting and recordkeeping requirements.

Dated: April 24, 1998.

Jesse Baskerville,

Director, Toxics and Pesticides Enforcement Division, Office of Regulatory Enforcement and Policy Assurance.

[FR Doc. 98–12151 Filed 5–6–98; 8:45 am]

BILLING CODE 6560–50–F

ENVIRONMENTAL PROTECTION AGENCY

40 CFR Part 300

[FRL–6009–2]

National Oil and Hazardous Substances Pollution Contingency Plan; National Priorities List Update

AGENCY: Environmental Protection Agency.

ACTION: Notice of deletion of the Pomona Oaks Residential Wells site and the Vineland State School site from the National Priorities List.

SUMMARY: The Environmental Protection Agency (EPA) Region II announces the deletion of the Pomona Oaks Well Contamination Site in Pomona, New Jersey and the Vineland State School Site in Vineland, New Jersey from the National Priorities List (NPL).

The NPL is Appendix B of 40 CFR part 300 which is the National Oil and Hazardous Substances Contingency Plan (NCP), which EPA promulgated pursuant to section 105 of the Comprehensive Environmental Response, Compensation and Liability Act of 1980 (CERCLA) as amended. EPA and the State of New Jersey have determined that the sites pose no significant threat to public health or the environment and, therefore, no remedial measures pursuant to CERCLA are appropriate.

EFFECTIVE DATE: May 7, 1998.

FOR FURTHER INFORMATION CONTACT: Matthew Westgate, Remedial Project Manager, U.S. Environmental Protection Agency, Region II, 290 Broadway, 19th floor, New York, N.Y. 10007–1866, (212) 637–4422.

ADDRESSES: Comprehensive information about the Pomona Oaks Site is available for viewing at the Administrative Record Repository located at Galloway Township Municipal Building, 300 East Jimmie Leeds Road, Absecon, New Jersey 08201, Attn: Mr. Andrew Katz, Township Manager.

Comprehensive information about the Vineland State School (Developmental Center) Site is available for viewing at the Administrative Record Repository located at Vineland City Library, 1058 East Landis Ave., Vineland, New Jersey 08360, Attn: Mr. Anthony Agnesino, Reference Director.

SUPPLEMENTARY INFORMATION: The sites to be deleted from the NPL are: Pomona Oaks Well Contamination, Pomona, New Jersey and the Vineland State School (Developmental Center), Vineland, New Jersey.

A Notice of Intent to Delete was published on July 15, 1996 (61 FR 36858). The closing date for comments on the Notice of Intent to Delete was August 14, 1996. There were no comments received for the Vineland State School Site; therefore, no responsiveness summary was prepared. EPA received two letters from residents of the Pomona Oaks subdivision. Both of the residents asked that EPA reconsider the deletion of the Pomona Oaks Site based on their belief that the source of the groundwater contamination has not been cleaned up and the once suspected underground gas tanks are still in the ground. They also inquired about additional testing of groundwater. EPA never positively identified the source of the groundwater contamination when the problems were discovered in 1982. Comprehensive sampling conducted as part of the Remedial Investigation in 1988 and afterwards demonstrated that the contamination was due to a singular event and had dispersed over time through natural attenuation and/or biodegradation. EPA concluded there was no ongoing source of contamination in the subdivision based on sampling conducted in 1990 and 1992.

The commentors expressed concerns about the health effects from the exposure to chemicals in their drinking water. EPA, the Agency for Toxic Substances and Disease Registry (ATSDR) as well as the state and local health departments were involved in assessing the health effects due to exposure to benzene in 1982. No acute effects were noted during the 1982 to 1985 period and no long-term health effects have been reported.

Finally, the residents asked that the site remain under investigation. Long-term groundwater monitoring was included as part of the No Action Record of Decision.

EPA provided detailed responses to these comments in a Responsiveness Summary, which is contained in the Deletion Docket. The Responsiveness Summary and entries in the Deletion

Docket may be reviewed at the EPA Region II office at 290 Broadway, New York, N.Y. or at the information repositories listed above.

The EPA identifies sites that appear to present a significant risk to public health, welfare or the environment and it maintains the NPL as the list of those sites. Sites on the NPL may be the subject of Hazardous Substance Response Trust Fund financed remedial actions. Section 300.425(e)(3) of the NCP states that Fund-financed actions may be taken at sites in the unlikely event that conditions at the site warrant such action. Deletion of a site from the NPL does not affect responsible party liability or impede agency efforts to recover costs associated with response efforts.

List of Subjects in 40 CFR Part 300

Environmental protection, Air pollution control, Chemicals, Hazardous waste, Hazardous substances, Intergovernmental relations, Penalties, Reporting and recordkeeping requirements, Superfund, Water pollution control, and Water supply.

Dated: April 20, 1998.

Jeanne Fox,

Regional Administrator, Region II.

For the reasons set out in the preamble, 40 CFR part 300 is amended as follows:

PART 300 [AMENDED]

1. The authority citation for part 300 continues to read as follows:

Authority: 33 U.S.C. 1321(c)(2); 42 U.S.C. 9601–9657; E.O. 12777, 56 FR 54757, 3 CFR 1991 Comp., p 351; E.O. 12580; 52 FR 02923; 3 CFR, 1987 Comp., p 193.

Table 1 to Appendix B [Amended]

2. Table 1 of appendix B to part 300 is amended by removing the sites Pomona Oaks Residential Wells, Galloway Township, New Jersey and Vineland State School, Vineland, New Jersey.

[FR Doc. 98–11879 Filed 5–6–98; 8:45 am]

BILLING CODE 6560–50–P

FEDERAL COMMUNICATIONS COMMISSION

47 CFR Part 68

[CC Docket No. 96–28; FCC 97–270]

Connection of Customer-Provided Terminal Equipment to the Telephone Network

AGENCY: Federal Communications Commission.

ACTION: Final rule; correction.

SUMMARY: The FCC published in the **Federal Register** of November 19, 1997 (62 FR 61649), final rules to Part 68 of Title 47, *Code of Federal Regulations*. Those rules govern the terms and conditions under which customer-provided terminal equipment may be connected to the telephone network without causing harm to the public switched network. This document corrects the typographical errors and omissions found in that document.

EFFECTIVE DATE: May 7, 1998.

FOR FURTHER INFORMATION CONTACT: William Howden, (202) 418–2343 or e-mail at whowden@fcc.gov.

SUPPLEMENTARY INFORMATION:

Need for Correction

As published, the final regulations contain errors which may prove to be misleading and are in need of clarification.

In rule FR Doc. 97–29925, published on November 19, 1997, (62 FR 61649) make the following corrections:

1. On page 61654, paragraph 31, in the first column, correct the effective date to read April 20, 1998.

§ 68.2 [Corrected]

2. On page 61654, in § 68.2, first column, last line insert a comma ‘‘,’’ between the words ‘‘lines’’ and ‘‘automatic’’.

3. On page 61654, amendatory instruction two, column one, lines 3 and 4, are corrected to read ‘‘and adding new paragraphs (d)(4) and (j)(3):’’.

3a. On page 61654, column 2, following the second line of asterisks the ‘‘(j)’’ is corrected to ‘‘(j) *** (3)’’.

4. On page 61654, in newly redesignated paragraph (j)(3), correct the date ‘‘April 20, 1997’’ to read ‘‘April 20, 1998’’.

§ 68.3 [Corrected]

5. On page 61654, in the instruction to § 68.3, second column, after ‘‘in the definition for Tie Trunk Transmission Interfaces, by removing paragraph (c)’’ add the following instruction ‘‘and redesignate paragraphs (d), (e) and (f) as (c), (d) and (e)’’.

6. On page 61657, in § 68.3 remove ‘‘Figure 68.3(f)’’, and add in its place the revised ‘‘Figure 68.3(f)’’ as follows:

BILLING CODE 6712–01–M

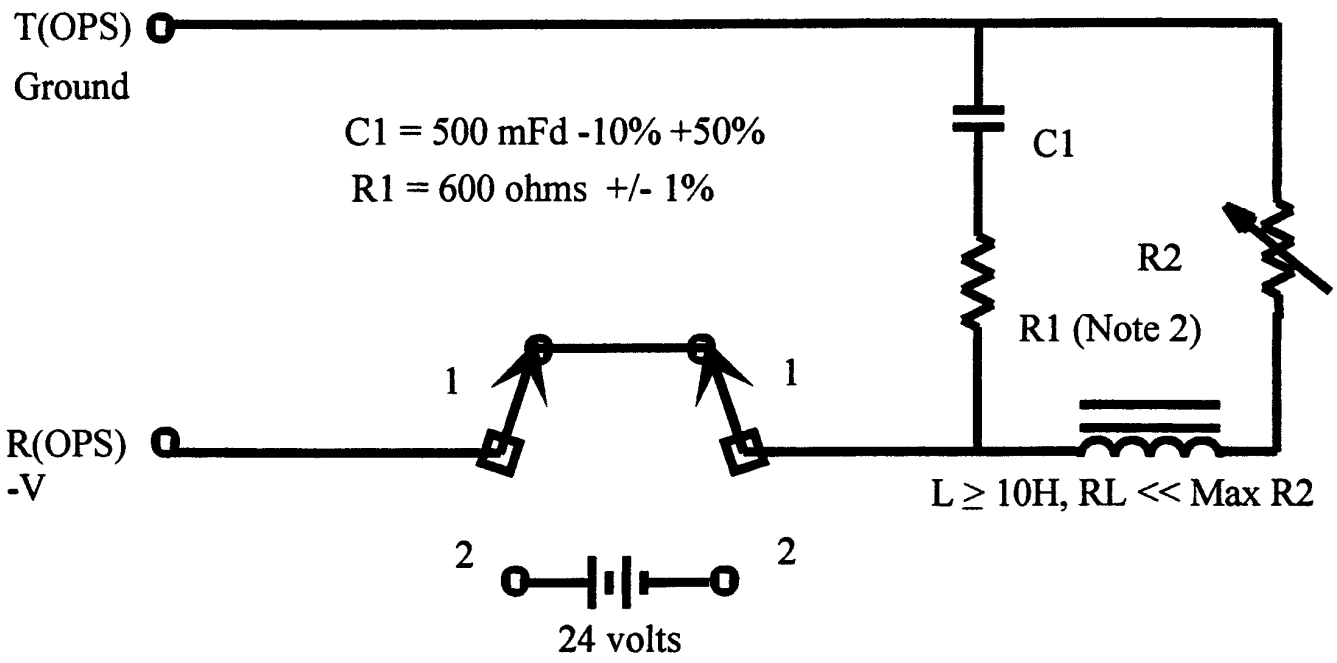

		R2 + RL continuously variable over the following range		
Condition	Switch Position for Test	Class A	Class B	Class C
1	1	up to 200 ohms	up to 800 ohms	up to 1800 ohms
2	2	N.A.	200 to 2300 ohms	900 to 3300 ohms

The minimum current for all resistance ranges shall be 16 ma.

Notes: (1) Means shall be used to generate , at the point of tip (T OPS) and ring (R OPS) connections to the PBX, the range of resistance and impedance which are employed by the illustrative circuit depicted above.
(2) In the transverse balance limitations , Section 68.310, the use of the dc portion of the loop simulator is specified. In such cases R1 and C1 shall be removed.
(3) Tests for compliance may be made with either R1 = 600 ohms or R1 replaced by the alternative termination specified in Figure 68.3(g).

Off Premises Loop Simulator - Figure 68.3(f)

7. On page 61660, in § 68.3, remove "Figure 68.3(i)", and add in its place the revised "Figure 68.3(i)" as follows:

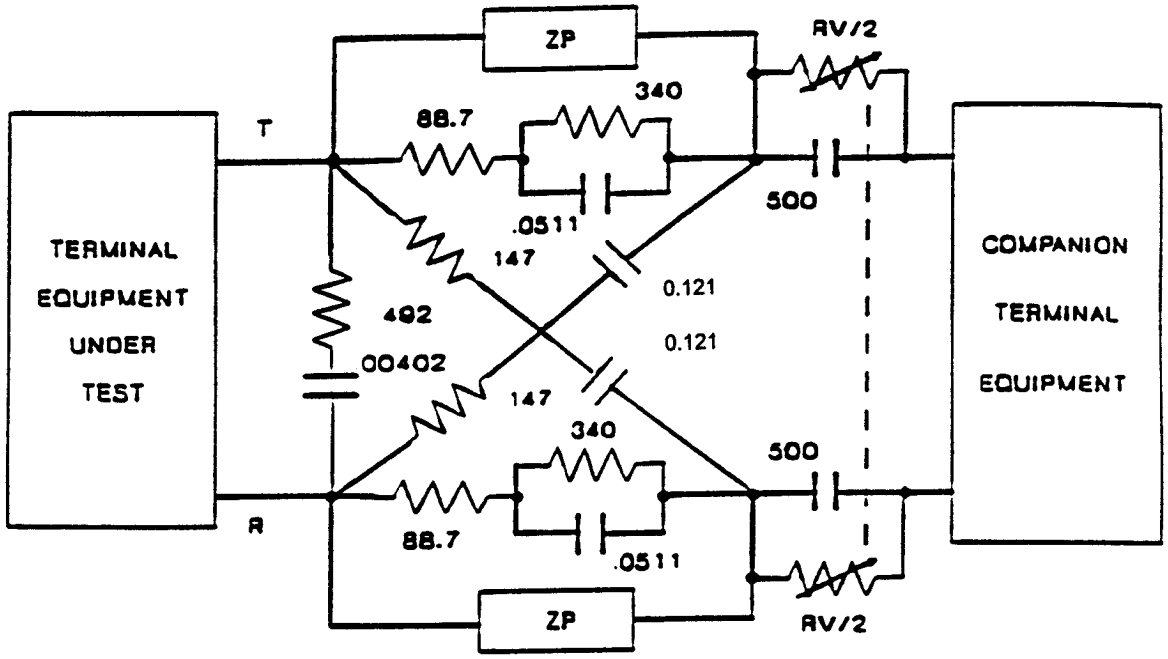

Resistances (Ohms), Capacitances (uF), Tolerances ± 2%.
RV + RP = 50 thru 3000 Ohms.
ZP is the magnitude of the lowpass filter impedance which is ⟨ 25 Ohm dc; ⟩ 3 Kohm from 10 Hz to 6 Khz.
RP/2 = dc resistance of lowpass filter, ZP in parallel with 428.7 Ohm.

Figure 68.3(i) LADC Impedance Simulator for Metallic Voltage Tests

BILLING CODE 6712–01–C

8. On page 61663, in § 68.3, remove ''Figure 68.3(m)''.

§ 68.302 [Corrected]

9. On page 61664, in § 68.302, column 2, line 8 in the Note to paragraph (b)(1), remove ''10 ms'' and add in its place ''10 µs (µseconds)''.

10. On page 61664, in § 68.302, column 3, lines 4 and 8 in the Note to paragraph (b)(2), remove ''10 ms'' and add in its place ''10 µs (µseconds)''.

11. On page 61664, in § 68.302, column 3, line 4 in the Note to paragraph (b)(2), remove ''(t_fµ)''and add in its place ''(t_f)''.

12. On page 61664, in § 68.302, column 3, lines 5 and 9 in the Note to paragraph, (b)(2), remove ''160 ms'' and add in its place ''160 µs''.

13. On page 61665, in § 68.302, first column, line 4 of the Note to paragraph (c)(1), remove ''9 ms'' and add in its place ''9 µs''.

14. On page 61665, in § 68.302, first column, line 8 of the note to paragraph (c)(1), remove ''5 ms'' and add in its place ''5 µs''.

15. On page 61665, in § 68.302, second column, line 29, in paragraph (c)(2)(iii) add ''as for example'' after ''sources,''.

16. On page 61665, in § 68.302, third column, line 1, in paragraph (c)(2)(iii) remove '', if so configured''.

17. On page 61666, in § 68.302, in the titles to figures, ''Fig. 68.302(a)'', ''Fig. 68.302(b)'' and ''Fig. 68.302(c)'' remove the ''x'' in each title.

18. On page 61670, in § 68.306, add the title ''Figure 68.306(a), Illustration of Ring Trip Requirement'' below the figure.

19. On page 61671, in § 68.306, first column, remove the entire paragraph (e) and replace with the following test:

* * * * *

(e) Intentional paths to ground (as required by § 68.304). (1) Connections with operational paths to ground. Registered terminal equipment and registered protective circuitry having an intentional dc conducting path to earth ground at operational voltages that was excluded during the leakage current test of § 68.304 shall have a dc current source applied between the following points:

(i) Telephone connections, including tip, ring, tip 1, ring 1, E&M leads and auxiliary leads, and

(ii) Earth grounding connections.

Note to paragraphs (e)(1)(i) and (e)(1)(ii): For each test point, gradually increase the current from zero to 1 ampere, then maintain the current for one minute. The voltage between paragraph (e)(1)(i) and paragraph (e)(1)(ii) of this section shall not exceed 0.1 volt at any time. In the event there is a component or circuit in the path to ground, the requirement shall be met between the grounded side of the component or circuit and the earth grounding connection.

(2) Connections with protection paths to ground. Registered terminal equipment and protective circuitry having an intentional dc conducting path to earth ground for protection purposes at the leakage current test voltage that was removed during the leakage current test of § 68.304 shall, upon its replacement, have a 50 or 60 Hz voltage source applied between the following points:

(i) Simplexed telephone connections, including tip and ring, tip 1 and ring 1, E&M leads and auxiliary leads, and

(ii) Earth grounding connections.

Note to paragraphs (e)(2)(i) and (e)(2)(ii): Gradually increase the voltage from zero to 120 volts rms for registered terminal equipment, or 300 volts rms for protective circuitry, then maintain the voltage for one minute. The current between (e)(2)(i) and (e)(2)(ii) of this section shall not exceed 10 mA peak at any time. As an alternative to carrying out this test on the complete equipment or device, the test may be carried out separately on components, subassemblies, and simulated circuits, outside the unit, provided that the test results would be representative of the results of testing the complete unit.

§ 68.308 [Corrected]

20. On page 61672, in § 68.308, third column, add three rows at the end of Table 68.308(a) as follows:

Programming resistor (Rp)* (ohms)	Programmed data equipment signal power output
* *	* * *
9200	−10 dBm.
19800	−11 dBm.
Open	−12 dBm.

21. On page 61673, in § 68.308, beginning in column one, after the note, correct the five equations for ''Return Loss'' to read as follows:

$$RL \triangleq 20 \log_{10} \left| \frac{Z_{PBX} + Z_{ref}}{Z_{PBX} - Z_{ref}} \right|$$

$$RL_i \triangleq 20 \log_{10} \left| \frac{Z_{PBX\,(input)} + Z_{ref}}{Z_{PBX\,(input)} - Z_{ref}} \right|$$

$$RL_o \triangleq 20 \log_{10} \left| \frac{Z_{PBX\,(output)} + Z_{ref}}{Z_{PBX\,(output)} - Z_{ref}} \right|$$

$$tl_f \triangleq 20 \log_{10} \left| \frac{I_i}{I_r} \right|$$

$$tl_r \triangleq 20 \log_{10} \left| \frac{I_i}{I_r} \right|$$

22. On page 61673, in § 68.308, column two, correct paragraphs (b)(6)(i) and (b)(6)(ii), to read as follows:

* * * * *

(i) For the two-wire interface:

$$RL \geq \begin{cases} 9 - 3\dfrac{\log(f/200)}{\log(2.5)}\ \text{dB} & ;\ \text{for } 200\ \text{Hz} \leq f \leq 500\ \text{Hz} \\ 6\ \text{dB} & ;\ \text{for } 500\ \text{Hz} \leq f \leq 3200\ \text{Hz} \end{cases}$$

(ii) For the four-wire lossless interface:

$$tl_f \geq \begin{cases} 10 - 4\dfrac{\log(f/200)}{\log(2.5)}\ \text{dB} & ;\ \text{for } 200\ \text{Hz} \leq f \leq 500\ \text{Hz} \\ 6\ \text{dB} & ;\ \text{for } 500\ \text{Hz} \leq f \leq 3200\ \text{Hz} \end{cases}$$

$$tl_r > 40\ \text{dB}$$

$$RL_i, RL_o \geq 3\ \text{dB}$$

23. On page 61673, in § 68.308, second column, add paragraph (b)(7)(ii)(C) and ''R2+RL'' table as follows:

* * * * *

(b) * * *

(7) * * *

(ii) * * *

(C) Except for Class A OPS interfaces, the dc current into the OPS line simulator circuit must be at least 20 mA for the following conditions (*see* Figure 68.3(f)):

R2+RL		
Condition	Class B	Class C
1	600	1300
2	1800	2500

* * * * *

24. On page 61674, in § 68.308, third column, line 7, correct the paragraph designation for paragraph (e)(1) and add a paragraph (e)(1)(i) to read as follows:

(1) Metallic voltage.

(i) 4 kHz to 270 kHz:

25. On page 61674, in § 68.308, third column, line 3, correct the paragraph designation for paragraph ''(e)(1)'' to read paragraph ''(e)(1)(i)''.

26. On page 61674, in § 68.308, after paragraph(e)(1)(i), correct the table to read as follows:

METALLIC VOLTAGE 4 kHz TO 270 kHz

Center frequency (f) of 8 kHz band	Max voltage in all 8 kHz bands	Metallic terminating impedance
8 kHz to 12 khz	−(6.4 + 12.6 log f) dBV	300 ohms.
12 kHz to 90 kHz	(23–40 log f) dBV	135 ohms.
90 kHz to 266 kHz	−55 dBV	135 homs.

27. On page 61674, in § 68.308, third column, add paragraph (e)(1)(ii) as follows:

* * * * *

(e) * * *

(1)(i) * * *

(ii) 270 Khz to 6 MHz. The rms value of the metallic voltage components in the frequency range of 270 kHz to 6 MHz shall, averaged over 2 microseconds, not exceed −15 dBV. This limitation applies with a metallic termination having an impedance of 135 ohms.

28. On page 61674, in § 68.308, after paragraph (e)(2)(ii), transfer the table so that it immediately follows (e)(2)(i) and correct the table to read as follows:

LONGITUDINAL VOLTAGE 4kHz TO 270 kHz

Center frequency (f) of 8kHz band	Max voltage in all 8 kHz bands	Longitudinal terminating impedance
8 kHz to 12 kHz	−(18.4 +20 log f) dBV	500 ohms.
12 kHz to 42 kHz	(3 −40 log f) dBV	90 ohms.
42 kHz to 266 kHz	−62 dBV 90	ohms.

29. On page 61675, in § 68.308, paragraph (f)(3), second column, remove lines 5 through 16, beginning with ''Frequencies below 4KHz:''

30. On page 61675, in § 68.308, first column, remove text beginning with ''paragraph (d)'' through page 61677.

31. On page 61680, in § 68.308, correct Table 68.308(e), by revising the fourth value ''29'' to read ''28''.

32. On page 61680, in § 68.308, in paragraph (h)(1)(iii), first column, line 8 after the Table, revise the reference to ''Table 68.308(b)'' to read ''Table 68.308(c)''.

§ 68.310 [Corrected]

33. On page 61682, in § 68.310, first column, correct the table immediately following paragraph (b), to read as follows:

State	Frequency (f)	Balance
Off-hook	200 Hz ≤ f ≤4000 Hz	≥40 dB.
On-hook	200 Hz ≤ f ≤1000 Hz	≥60 dB.
On-hook	1000 Hz ≤ f ≤4000 Hz	≥40 dB.

34. On page 61682, in § 68.310, second column, line 7, revise ''<f_2'' to read ''f_2''.

35. On page 61682, in § 68.310, second column, lines 10 and 26, after the table, correct the reference to ''Figure 68.310(b)'' to read ''Figure 68.310(f)''.

36. On page 61682, in § 68.310, third column, line 17, after the table, remove the ''.'' and add ''and a longitudinal impedance of 500 ohms. Figure 68.310(c) shows this termination.''

37. On page 61683, in § 68.310, correct the table heading to read ''Table 68.310(b)—Frequency Ranges of Transverse Balance Requirements for Digital Services''.

38. On page 61688, in § 68.310, Figure 68.310(e), remove reference to ''1.544kHz'' and add in its place ''1.544MHz''.

39. On page 61689, in § 68.310, add new Figure 68.310(f) as follows:

BILLING CODE 6712–01–M

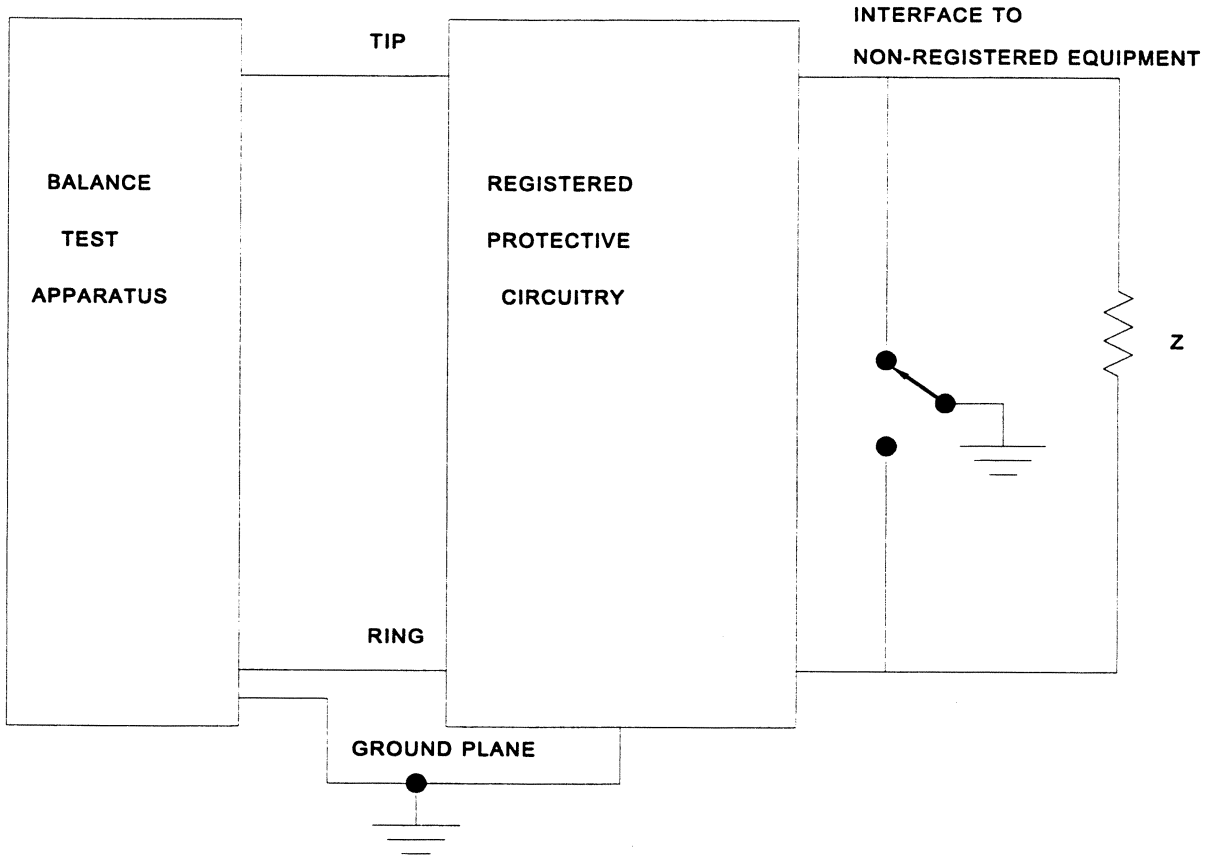

Z - Selected so that the reflected impedance at tip and ring is 600 Ω, 135 Ω, or 100 Ω depending on the service type of EUT

FIGURE 68.310 (f)
REQUIRED TERMINATION FOR CONNECTIONS TO NON-REGISTERED EQUIPMENT

Federal Communications Commission.
Geraldine A. Matise,
Chief, Network Services Division.
[FR Doc. 98–12127 Filed 5–6–98; 8:45 am]
BILLING CODE 6712–01–C

DEPARTMENT OF THE INTERIOR

Fish and Wildlife Service

50 CFR Part 17

Endangered and Threatened Wildlife and Plants: One-year Finding for a Petition To List the Harlequin Duck (Histrionicus histrionicus) in Eastern North America as Endangered or Threatened

AGENCY: Fish and Wildlife Service, Interior.

ACTION: Notice of one-year petition finding.

SUMMARY: The U.S. Fish and Wildlife Service (Service) under the Endangered Species Act of 1973, as amended (Act), announces a one-year finding on a petition to add the harlequin duck (*Histrionicus histrionicus*) in eastern North America to the List of Endangered and Threatened Wildlife. After review of all available scientific and commercial information, the Service finds that listing the harlequin duck is not warranted at this time.

The Service has based this finding on the following: (1) Prohibition of hunting since 1990 throughout the harlequin duck's entire range in eastern North America; (2) lack of substantial information indicating that the species' breeding, wintering, or staging habitat is likely to be curtailed, modified or destroyed; (3) lack of substantial information indicating that overutilization for commercial, recreational, scientific or educational purposes is significantly affecting the species; (4) lack of information indicating that disease or predation is causing a significant loss of individuals of the species; (5) lack of adequate information on population discreteness, size, and other parameters to indicate the species is likely at or below a minimum viable population size; (6) additional protective measures undertaken by the States of Maine and Rhode Island which decrease the likelihood of occurrence or the potential severity of an oil spill in the species' wintering areas; (7) limited population trend data indicating that the population has stabilized and is not declining; and (8) current regulatory mechanisms which, under the documented threats, adequately provide for the protection and conservation of the species.

DATES: The finding announced in this notice was made on April 30, 1998. Comments and information may be submitted until further notice.

ADDRESSES: Comments and materials regarding the petition finding may be submitted to the Endangered Species Coordinator, Northeast Regional Office, U.S. Fish and Wildlife Service, 300 Westgate Center Drive, Hadley, Massachusetts 01035. The 12-month petition finding, supporting data, and comments are available for public inspection, by appointment, during normal business hours at the above address.

FOR FURTHER INFORMATION CONTACT: Mr. Paul Nickerson at the above address or telephone 413/253–8615.

SUPPLEMENTARY INFORMATION:

Background

Pursuant to section 4(b)(3)(B) of the Endangered Species Act of 1973, as amended (16 U.S.C. 1531 *et seq.*), for any petition to revise the Lists of Endangered or Threatened Wildlife and Plants that presents substantial scientific and commercial information, the Service is required to make a finding within 12 months of the date of receipt of the petition. The finding is based on whether the petitioned action is: (a) not warranted, (b) warranted, or (c) warranted but precluded from immediate proposal by other pending proposals of higher priority. Such 12-month findings are to be published promptly in the **Federal Register**.

In a petition dated September 21, 1995, and received by the Service on September 25, 1995, the Northern Rockies Biodiversity Project and the Biodiversity Legal Foundation requested the Service to list the eastern North America population of the harlequin duck as endangered or threatened. The petition cited numerous threats to this taxon and its breeding and feeding habitats, including: (1) Destruction of riparian areas along breeding area streams; (2) destruction of watershed stability and stream flow regime in breeding areas by mining, road construction, or timber harvest; (3) inundation or elimination of breeding habitat by river impoundment and/or diversion; and (4) destruction of the larval insect food base through biting fly control programs in the northeast. The petition states that oil spills, chronic oil releases, and other coastal pollution pose a threat to the harlequin duck's wintering habitat. The petition also suggests that illegal and indiscriminate harvest is an imminent threat to the population. The Service made an administrative finding on August 7, 1997 (62 FR 42473), that the petition contained substantial information indicating that the requested action may be warranted.

Harlequin ducks are unique waterfowl in that they breed along fast-flowing, turbulent rivers and streams. In eastern North America, the species breeds along rivers in eastern Canada including the areas of Hudson, James, and Ungava bays, and Labrador south to Newfoundland. In winter, harlequin ducks are found exclusively in marine waters, occurring at the outer headlands/raised shoals where they forage in shallow water and rest, preen, and loaf in deeper water. The majority of harlequin ducks in eastern North America winter in Maine, with smaller numbers wintering south to Massachusetts and Rhode Island. Occasionally, scattered individuals can be found south to Virginia and North Carolina.

Until recently, harlequin ducks in eastern North America were thought to be one of four separate populations. The others are the Pacific population, estimated at over 1 million individuals; the Greenland population, estimated at 5000 breeding pairs; and the Iceland population estimated at 3000–5000 breeding pairs. Recent limited data indicate that the eastern North America population, estimated at 1500–2000 individuals, may have some interchange with the Greenland population.

The petitioners cited threats to the species' breeding and feeding habitats. However, available information does not substantiate that these threats currently exist or that there is a significant probability that they will occur. As an example, the petition mentions that nesting habitat could be inundated by hydroelectric development in northern Quebec and Labrador. While the Service recognizes that past hydroelectric development may have inundated harlequin duck nesting habitat, the petitioners did not identify any proposed projects within the species' known breeding range. The Service is aware of a previously proposed hydroelectric project, the James Bay II Bienville in northern Quebec, which would have impacted harlequin ducks. Of at least 153 breeding pairs found in the study area, 56 breeding pairs would have been displaced by flooding and other related alterations to the area's hydrology. However, the Quebec government has abandoned this project. The Service also found no documentation to support that timber harvest, mining, and construction activities impact breeding or foraging habitat. These impacts are identified as ''potential,'' but specific information on where these impacts have occurred, are occurring, or may yet occur is not available.

The potential impact of a chemical or oil spill to wintering harlequin ducks is dependent on several factors such as the location, time of year, and type of chemical. The State of Maine may support up to 800 wintering harlequin ducks or 50 percent of the known eastern North America wintering population. The State has updated its procedures for responding to spills to minimize environmental impacts. These procedures were adopted following the Exxon Valdez oil spill in Alaska in order to decrease the probability of such a disaster occurring in Maine. The State of Rhode Island adopted new procedures following the North Cape spill that occurred off the Rhode Island coast in 1996. The State's Department of Environmental Management has implemented procedures to manage single-hull tankers as they enter Rhode Island waters. Legislation is pending that would require, by the year 2001, all single-hull tankers to be escorted by a tugboat through Rhode Island waters.

The Service finds that the species continues to occur throughout its historical range in eastern North America. There is no evidence of range reduction. Of the approximately 800 harlequin ducks that winter in Maine, approximately 200 winter around Isle au Haut. The portion of Isle au Haut where these ducks winter is part of Acadia National Park. Approximately 95–120 birds winter in Rhode Island off Sachuest Point, a National Wildlife Refuge. Federal ownership of these areas provides some additional protection from threats such as illegal hunting and habitat development, to the wintering harlequin duck population.

Since 1990, hunting for harlequin ducks has been prohibited throughout the species' entire eastern North America range. Recent analysis of population trend data indicate that the number of birds wintering in Maine stopped declining between 1991 and 1992. Trends for the last 2 years show the population gradually increasing. The Service believes that the cessation of legal hunting has eliminated a significant threat to the harlequin duck population and is likely largely responsible for the recent increase in numbers of wintering harlequin ducks in Maine. The petitioners state, and the Service acknowledges, that some illegal harvest likely still occurs. However, the petitioners provided no sources for their information and no estimate on the actual numbers of harlequin ducks illegally taken. The Service was not able to locate any data indicating that the extent of this illegal harvest is significantly impacting, or is likely to impact, the harlequin duck population.

On the basis of the best available scientific and commercial information, the Service finds that listing the harlequin duck in eastern North America is not warranted at the present time because the species is not currently in danger of extinction and is not likely to become so in the foreseeable future. Notwithstanding this finding, the Service through its many programs (e.g., Migratory Birds and the North American Waterfowl Management Plan) intends to continue to gather data, participate in genetic studies and cooperate with the States of Maine and Rhode Island and with Canada to ensure that the species continues to receive adequate protection. Should new information become available indicating that the species faces greater threats than currently exist, this decision will be revisited to determine whether protection under the Act is appropriate.

References Cited

A complete list of references used in the preparation of the 12-month finding is available upon request from the Northeast Regional Office (see **ADDRESSES** section).

Author

The primary author of this notice is Diane Lynch, Northeast Regional Office (see **ADDRESSES** section).

Authority

The authority for this section is the Endangered Species Act of 1973, as amended (16 U.S.C. 1531 *et seq.*).

Dated: April 30, 1998.

Jamie Rappaport Clark,

Director, U.S. Fish and Wildlife Service.

[FR Doc. 98–12171 Filed 5–6–98; 8:45 am]

BILLING CODE 4310–55–P

Proposed Rules

Federal Register
Vol. 63, No. 88
Thursday, May 7, 1998

This section of the FEDERAL REGISTER contains notices to the public of the proposed issuance of rules and regulations. The purpose of these notices is to give interested persons an opportunity to participate in the rule making prior to the adoption of the final rules.

DEPARTMENT OF TRANSPORTATION

Federal Aviation Administration

14 CFR Part 39

[Docket No. 98–ANE–21–AD]

RIN 2120–AA64

Airworthiness Directives; Pratt & Whitney JT9D Series Turbofan Engines

AGENCY: Federal Aviation Administration, DOT.

ACTION: Notice of proposed rulemaking (NPRM).

SUMMARY: This document proposes the adoption of a new airworthiness directive (AD) that is applicable to certain Pratt & Whitney (PW) JT9D series turbofan engines. This proposal would require a one–time acid etch inspection of the turbine exhaust case (TEC) wall between and on either side of the ''R'' and ''S'' rails in the engine mount lug area (top quadrant of the case) for the presence of weld material, and if weld material is detected, removal from service and replacement with serviceable parts. This proposal is prompted by reports of weld rework performed in the outer case wall of the TEC, in the mount lug fillet area, during original production to address local under minimum wall thickness conditions which have left the TEC's structural capability compromised. The actions specified by the proposed AD are intended to prevent TEC structural failure under abnormal operating conditions, which could result in reduced main mount load capability, which could result in an engine separating from the wing and subsequent loss of control of the aircraft.

DATES: Comments must be received by July 6, 1998.

ADDRESSES: Submit comments in triplicate to the Federal Aviation Administration (FAA), New England Region, Office of the Regional Counsel, Attention: Rules Docket No. 98–ANE–21–AD, 12 New England Executive Park, Burlington, MA 01803–5299. Comments may also be sent via the Internet using the following address: ''9-ad-engineprop@faa.dot.gov''. Comments sent via the Internet must contain the docket number in the subject line. Comments may be inspected at this location between 8:00 a.m. and 4:30 p.m., Monday through Friday, except Federal holidays.

The service information referenced in the proposed rule may be obtained from Pratt & Whitney, 400 Main St., East Hartford, CT 06108; telephone (860) 565–6600, fax (860) 565–4503. This information may be examined at the FAA, New England Region, Office of the Regional Counsel, 12 New England Executive Park, Burlington, MA.

FOR FURTHER INFORMATION CONTACT: Tara Goodman, Aerospace Engineer, Engine Certification Office, FAA, Engine and Propeller Directorate, 12 New England Executive Park, Burlington, MA 01803–5299; telephone (781) 238–7130, fax (781) 238–7199.

SUPPLEMENTARY INFORMATION:

Comments Invited

Interested persons are invited to participate in the making of the proposed rule by submitting such written data, views, or arguments as they may desire. Communications should identify the Rules Docket number and be submitted in triplicate to the address specified above. All communications received on or before the closing date for comments, specified above, will be considered before taking action on the proposed rule. The proposals contained in this notice may be changed in light of the comments received.

Comments are specifically invited on the overall regulatory, economic, environmental, and energy aspects of the proposed rule. All comments submitted will be available, both before and after the closing date for comments, in the Rules Docket for examination by interested persons. A report summarizing each FAA-public contact concerned with the substance of this proposal will be filed in the Rules Docket.

Commenters wishing the FAA to acknowledge receipt of their comments submitted in response to this notice must submit a self-addressed, stamped postcard on which the following statement is made: ''Comments to Docket Number 98–ANE–21–AD.'' The postcard will be date stamped and returned to the commenter.

Availability of NPRMs

Any person may obtain a copy of this NPRM by submitting a request to the FAA, New England Region, Office of the Regional Counsel, Attention: Rules Docket No. 98–ANE–21–AD, 12 New England Executive Park, Burlington, MA 01803–5299.

Discussion

The Federal Aviation Administration (FAA) has received reports of weld rework performed in the outer case wall of the turbine exhaust case (TEC), in the mount lug fillet area, during original production to address local under minimum wall thickness conditions which have left the TEC's structural capability compromised on certain Pratt & Whitney (PW) Models JT9D–7, –7A, –7H, –7AH, –7F, –7J, –20, –20J, –7Q, –7Q3, –59A, –70A, and –7R4D turbofan engines. The investigation identified 24 TECs as having a weld rework performed to the case wall during original production to address local under minimum wall thickness conditions. Rework procedure authorization did not limit welding locations on the circumference of the case wall and permitted welding either on the inner diameter or the outer diameter of the part. A weld rework may or may not have been performed in the mount area on the 24 turbine exhaust cases, only 11 of which have been identified by serial number (S/N). The FAA has determined that possibly other TECs that had the welding rework procedure have a quality review order (QRO) number marked on it next to the part. At this time one of the 24 turbine exhaust cases (S/N JC4708) has been located and removed from service. Engine manual repair allowances were never intended to authorize welding in the vicinity of the engine mount lugs due to structural concerns for engine mount integrity under abnormal engine operating conditions. The FAA believes that the majority of these parts have been installed in engines; however, there may be some that are presently not installed. The manufacturer regards weld repairs in the turbine exhaust case wall on either side of the ''R'' and ''S'' rails in the engine mount lug area unacceptable and does not authorize or accept case wall weld repairs in the

engine mount lug area. This condition, if not corrected, could result in TEC structural failure under abnormal operating conditions, which could result in reduced main mount load capability, which could result in an engine separating from the wing and subsequent loss of control of the aircraft.

The FAA has reviewed and approved the technical contents PW Alert Service Bulletin (ASB) No. JT9D–A6322, Revision 1, dated March 19, 1998, and ASB No. JT9D–7R4–A72–546, Revision 1, dated March 19, 1998, that describe procedures for acid etch inspections of the TEC wall between and on either side of the ''R'' and ''S'' rails in the engine mount lug area (top quadrant of the case) for the presence of weld material, and if that material is detected, removal from service and replacement with serviceable parts.

Since an unsafe condition has been identified that is likely to exist or develop on other products of this same type design, the proposed AD would require, at the next removal of the TEC from the low pressure turbine case ''P'' flange for maintenance after the effective date of this AD, a one-time acid etch inspection of TEC wall between and on either side of the ''R'' and ''S'' rails in the engine mount lug area (top quadrant of the case) for the presence of weld material, and if that material is detected, removal from service and replacement with serviceable parts. The actions would be required to be accomplished in accordance with the ASBs described previously.

There are approximately 2,720 engines of the affected design in the worldwide fleet. The FAA estimates that 1,125 engines installed on aircraft of U.S. registry would be affected by this proposed AD, that it would take approximately 1.4 work hours per engine to accomplish the proposed actions, and that the average labor rate is $60 per work hour. Based on these figures, the total cost impact of the proposed AD on U.S. operators is estimated to be $94,500.

The regulations proposed herein would not have substantial direct effects on the States, on the relationship between the national government and the States, or on the distribution of power and responsibilities among the various levels of government. Therefore, in accordance with Executive Order 12612, it is determined that this proposal would not have sufficient federalism implications to warrant the preparation of a Federalism Assessment.

For the reasons discussed above, I certify that this proposed regulation: (1) Is not a ''significant regulatory action'' under Executive Order 12866; (2) is not a ''significant rule'' under the DOT Regulatory Policies and Procedures (44 FR 11034, February 26, 1979); and (3) if promulgated, will not have a significant economic impact, positive or negative, on a substantial number of small entities under the criteria of the Regulatory Flexibility Act. A copy of the draft regulatory evaluation prepared for this action is contained in the Rules Docket. A copy of it may be obtained by contacting the Rules Docket at the location provided under the caption **ADDRESSES.**

List of Subjects in 14 CFR Part 39

Air transportation, Aircraft, Aviation safety, Safety.

The Proposed Amendment

Accordingly, pursuant to the authority delegated to me by the Administrator, the Federal Aviation Administration proposes to amend part 39 of the Federal Aviation Regulations (14 CFR part 39) as follows:

PART 39—AIRWORTHINESS DIRECTIVES

1. The authority citation for part 39 continues to read as follows:

Authority: 49 U.S.C. 106(g), 40113, 44701.

§ 39.13 [Amended]

2. Section 39.13 is amended by adding the following new airworthiness directive:

Pratt & Whitney: Docket No. 98–ANE–21–AD.

Applicability: Pratt & Whitney (PW) Models JT9D–7, –7A, –7H, –7AH, –7F, –7J, –20, –20J, –7Q, –7Q3, –59A, –70A, and –7R4D turbofan engines. These engines are installed on but not limited to Boeing 747 and 767 series, McDonnell Douglas DC–10 series, and Airbus Industrie A300 and A310 series aircraft.

Note 1: This airworthiness directive (AD) applies to each engine identified in the preceding applicability provision, regardless of whether it has been modified, altered, or repaired in the area subject to the requirements of this AD. For engines that have been modified, altered, or repaired so that the performance of the requirements of this AD is affected, the owner/operator must request approval for an alternative method of compliance in accordance with paragraph (b) of this AD. The request should include an assessment of the effect of the modification, alteration, or repair on the unsafe condition addressed by this AD; and, if the unsafe condition has not been eliminated, the request should include specific proposed actions to address it.

Compliance: Required as indicated, unless accomplished previously.

To prevent turbine exhaust case (TEC) structural failure under abnormal operating conditions, which could result in reduced main mount load capability, which could result in an engine separating from the wing and subsequent loss of control of the aircraft, accomplish the following:

(a) At the next removal of the TEC from the low pressure turbine case ''P'' flange for maintenance after the effective date of this AD, accomplish the following in accordance with PW Alert Service Bulletin (ASB) No. JT9D–A6322, Revision 1, dated March 19, 1998, or ASB No. JT9D–7R4–A72–546, Revision 1, dated March 19, 1998, as applicable:

(1) Perform a one-time acid etch inspection of TEC wall between and on either side of the ''R'' and ''S'' rails in the engine mount lug area (top quadrant of the case) for the presence of weld material.

(2) If weld material is found, remove from service the TEC and replace with a serviceable part.

(b) An alternative method of compliance or adjustment of the compliance time that provides an acceptable level of safety may be used if approved by the Manager, Engine Certification Office. Operators shall submit their request through an appropriate FAA Principal Maintenance Inspector, who may add comments and then send it to the Manager, Engine Certification Office.

Note 2: Information concerning the existence of approved alternative methods of compliance with this airworthiness directive, if any, may be obtained from the Engine Certification Office.

(c) Special flight permits may be issued in accordance with sections 21.197 and 21.199 of the Federal Aviation Regulations (14 CFR 21.197 and 21.199) to operate the aircraft to a location where the inspection requirements of this AD can be accomplished.

Issued in Burlington, Massachusetts, on April 29, 1998.

Thomas A. Boudreau,

Acting Manager, Engine and Propeller Directorate, Aircraft Certification Service.

[FR Doc. 98–12062 Filed 5–6–98; 8:45 am]

BILLING CODE 4910–13–P

DEPARTMENT OF TRANSPORTATION

Federal Aviation Administration

14 CFR Part 39

[Docket No. 97–SW–43–AD]

Airworthiness Directives; Eurocopter France SA 330F, G, and J Helicopters

AGENCY: Federal Aviation Administration, DOT.

ACTION: Notice of proposed rulemaking (NPRM).

SUMMARY: This document proposes the adoption of a new airworthiness directive (AD) that is applicable to Eurocopter France Model SA 330F, G, and J helicopters. This proposal would require removal and replacement of each tail rotor electrical bonding braid (bonding braid). This proposal is prompted by one in-service report of

failure of a bonding braid. The actions specified by the proposed AD are intended to prevent failure of a bonding braid due to fatigue, resulting impact with the tail rotor blades, and subsequent loss of control of the helicopter.

DATES: Comments must be received on or before June 8, 1998.

ADDRESSES: Submit comments in triplicate to the Federal Aviation Administration (FAA), Office of the Regional Counsel, Southwest Region, Attention: Rules Docket No. 97–SW–43–AD, 2601 Meacham Blvd., Room 663, Fort Worth, Texas 76137. Comments may be inspected at this location between 9:00 a.m. and 3:00 p.m., Monday through Friday, except Federal holidays.

The service information referenced in the proposed rule may be obtained from American Eurocopter Corporation, 2701 Forum Drive, Grand Prairie, Texas 75053–4005, telephone (972) 641–3460, fax (972) 641–3527. This information may be examined at the FAA, Office of the Regional Counsel, Southwest Region, 2601 Meacham Blvd., Room 663, Fort Worth, Texas.

FOR FURTHER INFORMATION CONTACT: Mr. Robert McCallister, Aerospace Engineer, FAA, Rotorcraft Directorate, Rotorcraft Standards Staff, 2601 Meacham Blvd., Fort Worth, Texas 76137, telephone (817) 222–5121, fax (817) 222–5961.

SUPPLEMENTARY INFORMATION:

Comments Invited

Interested persons are invited to participate in the making of the proposed rule by submitting such written data, views, or arguments as they may desire. Communications should identify the Rules Docket number and be submitted in triplicate to the address specified above. All communications received on or before the closing date for comments, specified above, will be considered before taking action on the proposed rule. The proposals contained in this notice may be changed in light of the comments received.

Comments are specifically invited on the overall regulatory, economic, environmental, and energy aspects of the proposed rule. All comments submitted will be available, both before and after the closing date for comments, in the Rules Docket for examination by interested persons. A report summarizing each FAA-public contact concerned with the substance of this proposal will be filed in the Rules Docket.

Commenters wishing the FAA to acknowledge receipt of their comments submitted in response to this notice must submit a self-addressed, stamped postcard on which the following statement is made: ''Comments to Docket No. 97–SW–43–AD.'' The postcard will be date stamped and returned to the commenter.

Availability of NPRMs

Any person may obtain a copy of this NPRM by submitting a request to the FAA, Office of the Regional Counsel, Southwest Region, Attention: Rules Docket No. 97–SW–43–AD, 2601 Meacham Blvd., Room 663, Fort Worth, Texas 76137.

Discussion

The Direction Generale De L'Aviation Civile (DGAC), which is the airworthiness authority for France, recently notified the FAA that an unsafe condition may exist on Eurocopter France Model SA 330F, G, and J helicopters. The DGAC advises that, in order to improve the in-service resistance of the bonding braids and to limit the risks of their impacting the blades, the bonding braids and their attachment clamps were to be removed and replaced before September 1, 1995.

Eurocopter France has issued Eurocopter France Service Bulletin SA 330 No. 65.73 R3, dated June 22, 1995. The DGAC classified this service bulletin as mandatory and issued AD 95–153–072(B), dated July 19, 1995, in order to assure the continued airworthiness of these helicopters in France.

This helicopter model is manufactured in France and is type certificated for operation in the United States under the provisions of § 21.29 of the Federal Aviation Regulations (14 CFR 21.29) and the applicable bilateral airworthiness agreement. Pursuant tot his bilateral airworthiness agreement, the DGAC has kept the FAA informed of the situation described above. The FAA has examined the findings of the DGAC, reviewed all available information, and determined that AD action is necessary for products of this type design that are certificated for operation in the United States.

Since an unsafe condition has been identified that is likely to exist or develop on other Eurocopter France Model SA 330F, G, and J helicopters of the same type design registered in the United States, the proposed AD would require replacing the bonding braids. The actions would be required to be accomplished in accordance with the service bulletin described previously.

The FAA estimates that 2 helicopters of U.S. registry would be affected by this proposed AD, that it would take approximately 2 work hours per helicopter to accomplish the proposed actions, and that the average labor rate is $60 per work hour. Required parts would cost approximately $250 per helicopter. Based on these figures, the total cost impact of the proposed AD on U.S. operators is estimated to be $740.

The regulations proposed herein would not have substantial direct effects on the States, on the relationship between the national government and the States, or on the distribution of power and responsibilities among the various levels of government. Therefore, in accordance with Executive Order 12612, it is determined that this proposal would not have sufficient federalism implications to warrant the preparation of a Federalism Assessment.

For the reasons discussed above, I certify that this proposed regulation (1) is not a ''significant regulatory action'' under Executive Order 12866; (2) is not a ''significant rule'' under the DOT Regulatory Policies and Procedures (44 FR 11034, February 26, 1979); and (3) if promulgated, will not have a significant economic impact, positive or negative, on a substantial number of small entities under the criteria of the Regulatory Flexibility Act. A copy of the draft regulatory evaluation prepared for this action is contained in the Rules docket. A copy of it may be obtained by contacting the Rules docket at the location provided under the caption **ADDRESSES.**

List of Subjects in 14 CFR Part 39

Air transportation, Aircraft, Aviation safety, Safety.

The Proposed Amendment

Accordingly, pursuant to the authority delegated to me by the Administrator, the Federal Aviation Administration proposes to amend part 39 of the Federal Aviation Regulations (14 CFR part 39) as follows:

PART 39—AIRWORTHINESS DIRECTIVES

1. The authority citation for part 39 continues to read as follows:

Authority: 49 U.S.C. 106(g), 40113, 44701.

§ 39.13 [Amended]

2. Section 39.13 is amended by adding a new airworthiness directive to read as follows:

Eurocopter France: Docket No. 97–SW–43–AD.

Applicability: Model SA330F, G, and J helicopters with tail rotor electrical bonding

braids, part number (P/N) 332A031.1276.00, that have not been modified in accordance with AMS 332A07–66–003 or AMS 33207–66–072, installed, certificated in any category.

Note 1: This AD applies to each helicopter identified in the preceding applicability provision, regardless of whether it has been modified, altered, or repaired in the area subject to the requirements of this AD. For helicopters that have been modified, altered, or repaired so that the performance of the requirements of this AD is affected, the owner/operator must use the authority provided in paragraph (b) to request approval from the FAA. This approval may address either no action, if the current configuration eliminates the unsafe condition, or different actions necessary to address the unsafe condition described in this AD. Such a request should include an assessment of the effect of the changed configuration on the unsafe condition addressed by this AD. In no case does the presence of any modification, alteration, or repair remove any helicopter from the applicability of this AD.

Compliance: Required within the next 60 calendar days, unless accomplished previously.

To prevent failure of a tail rotor electrical bonding braid (bonding braid) due to fatigue, resulting impact with the tail rotor blades, and subsequent loss of control of the helicopter, accomplish the following:

(a) Remove the bonding braids, P/N 332A31.1276.00, and replace them with airworthy bonding braids, P/N 332A31.1276.01 in accordance with paragraphs B and C of the Operating Procedure of Eurocopter France Service Bulletin SA 330 No. 65.73 R3, dated June 22, 1995.

(b) An alternative method of compliance or adjustment of the compliance time that provides an acceptable level of safety may be used if approved by the Manager, Rotorcraft Standards Staff, Rotorcraft Directorate, FAA. Operators shall submit their requests through an FAA principal Maintenance Inspector, who may concur or comment and then send it to the Manager, Rotorcraft Standards Staff.

Note 2: Information concerning the existence of approved alternative methods of compliance with this AD, if any, may be obtained from the Rotorcraft Standards Staff.

(c) Special flight permits may be issued in accordance with sections 21.197 and 21.199 of the Federal Aviation Regulations (14 CFR 21.197 and 21.199) to operate the helicopter to a location where the requirements of this AD can be accomplished.

Note 3: The subject of this AD is addressed in Direction Generale L'Aviation Civile (France) AD 95–153–072(B), dated July 19, 1995.

Issued in Fort Worth, Texas, on April 29, 1998.

Eric Bries,

Acting Manager, Rotorcraft Directorate, Aircraft Certification Service.

[FR Doc. 98–12113 Filed 5–6–98; 8:45 am]

BILLING CODE 4910–13–M

DEPARTMENT OF TRANSPORTATION

Federal Aviation Administration

14 CFR Part 39

[Docket No. 97–SW–36–AD]

Airworthiness Directives; Eurocopter France Model AS 332C, L, and L1 Helicopters

AGENCY: Federal Aviation Administration, DOT.

ACTION: Notice of proposed rulemaking (NPRM).

SUMMARY: This document proposes the adoption of a new airworthiness directive (AD) that is applicable to Eurocopter France Model AS 332C, L, and L1 helicopters. This proposal would require replacing main rotor blades with modified main rotor blades. This proposal is prompted by reports of an investigation that found broken braids on main rotor blade de-icers. The actions specified by the proposed AD are intended to prevent loss of the de-icing capabilities of the main rotor blades, adverse performance during flight in icing conditions, and subsequent loss of control of the helicopter.

DATES: Comments must be received by July 6, 1998.

ADDRESSES: Submit comments in triplicate to the Federal Aviation Administration (FAA), Office of the Regional Counsel, Southwest Region, Attention: Rules Docket No. 97–SW–36–Ad, 2601 Meacham Blvd., Room 663, Forth Worth, Texas 76137. Comments may be inspected at this location between 9:00 a.m. and 3:00 p.m., Monday through Friday, except Federal holidays.

The service information referenced in the proposed rule may be obtained from American Eurocopter Corporation, 2701 Forum Drive, Grand Prairie, Texas 75053–4005, telephone (972) 641–3460, fax (972) 641–3527. This information may be examined at the FAA, Office of the Regional Counsel, Southwest Region, 2601 Meacham Blvd., Room 663, Forth Worth, Texas.

FOR FURTHER INFORMATION CONTACT: Mr. Robert McCallister, Aerospace Engineer, FAA, Rotorcraft Directorate, Rotorcraft Standards Staff, 2601 Meacham Blvd., Forth Worth, Texas 76137, telephone (817) 222–5121, fax (812) 222–5961.

SUPPLEMENTARY INFORMATION:

Comments Invited

Interested persons are invited to participate in the making of the proposed rule by submitting such written data, views, or arguments as they may desire. Communications should identify the Rules Docket number and be submitted in triplicate to the address specified above. All communications received on or before the closing date for comments, specified above, will be considered before taking action on the proposed rule. The proposals contained in this notice may be changed in light of the comments received.

Comments are specifically invited on the overall regulatory, economic, environmental, and energy aspects of the proposed rule. All comments submitted will be available, both before and after the closing date for comments, in the Rules Docket for examination by interested persons. A report summarizing each FAA-public contact concerned with the substance of this proposal will be filed in the Rules Docket.

Commenters wishing the FAA to acknowledge receipt of their comments submitted in response to this notice must submit a self-addressed, stamped postcard on which the following statement is made: ''Comments to Docket No. 97–SW–36–AD.'' The postcard will be date stamped and returned to the commenter.

Availability of NPRMs

Any person may obtain a copy of this NPRM by submitting a request to the FAA, Office of the Regional Counsel, Southwest Region, Attention: Rules Docket No. 97–SW–36–AD, 2601 Meacham Blvd., Room 663, Fort Worth, Texas 76137.

Discussion

The Direction Generale de L'Aviation Civile (DGAC), which is the airworthiness authority for France, recently notified the FAA that an unsafe condition may exist on Eurocopter France AS 332C, L, and L1 helicopters. The DGAC advises that replacing the de-icers on these helicopters is necessary to prevent loss of the de-icing function due to damaged electric return braids.

Eurocopter France has issued Telex Service Number (No.) 10002, dated January 17, 1994, which specifies modification of the main rotor blade within specified time intervals. The DGAC classified the Technical Directive No. 230 referenced in the telex as mandatory and issued AD 95–029–054(B) in order to assure the continued airworthiness of these helicopters in France.

This helicopter model is manufactured in France and is type certificated for operation in the United States under the provisions of section

21.29 of the Federal Aviation Regulations (14 CFR 21.29) and the applicable bilateral airworthiness agreement. Pursuant to this bilateral airworthiness agreement, the DGAC has kept the FAA informed of the situation described above. The FAA has examined the findings of the DGAC, reviewed all available information, and determined that AD action is necessary for products of this type design that are certificated for operation in the United States.

Since an unsafe condition has been identified that is likely to exist or develop on other Eurocopter France AS 332C,L, and L1 helicopters of the same type design registered in the United States, the proposed AD would require replacing main rotor blades with modified main rotor blades. The actions would be required to be accomplished in accordance with the service bulletin described previously.

The FAA estimates that 3 helicopters of U.S. registry would be affected by this proposed AD, that it would take approximately 20 work hours per helicopter to accomplished the proposed actions, and that the average labor rate is $60 per work hour. Required parts will be provided at no cost by the manufacturer. Based on these figures the total cost impact of the proposed AD on U.S. operators is estimated to be $1200 per helicopter.

The regulations proposed herein would not have substantial direct effects on the States, on the relationship between the national government and the States, or on the distribution of power and responsibilities among the various levels of government. Therefore, in accordance with Executive Order 12612, it is determined that this proposal would not have sufficient federalism implications to warrant the preparation of a Federalism Assessment.

For the reasons discussed above, I certify that this proposed regulation (1) is not a ''significant regulatory action'' under Executive Order 12866; (2) is not a ''significant rule'' under the DOT Regulatory Policies and Procedures (44 FR 11034, February 26, 1979); and (3) if promulgated, will not have a significant economic impact, positive or negative, on a substantial number of small entities under the criteria of the Regulatory Flexibility Act. A copy of the draft regulatory evaluation prepared for this action is contained in the Rule Docket. A copy of it may be obtained by contacting the Rules Docket at the location provided under the caption **ADDRESSES.**

List of Subjects in 14 CFR Part 39

Air transportation, Aircraft, Aviation safety, Safety.

The Proposed Amendment

Accordingly, pursuant to the authority delegated to me by the Administrator, the Federal Aviation Administration proposes to amend part 39 of the Federal Aviation Regulations (14 CFR part 39) as follows:

PART 39—AIRWORTHINESS DIRECTIVES

1. The authority citation for part 39 continues to read as follows:

Authority: 49 U.S.C. 106(g), 40113, 44701.

§ 39.13 [Amended]

2. Section 39.13 is amended by adding a new airworthiness directive to read as follows:

Eurocopter France: Docket No. 97–SW–36–AD.

Applicability: Model AS 332C, L, and L1 helicopters, with main rotor blades, part number (P/N) 332A11–030–03 or 332A11–030–04, installed, certificated in any category.

Note 1: This AD applies to each helicopter identified in the preceding applicable provision, regardless of whether it has been modified, altered, or repaired in the area subject to the requirements of this AD. For helicopters that have been modified, altered, or repaired so that the performance of the requirements of this AD is affected, the owner/operator must use the authority provided in paragraph (c) to request approval from the FAA. This approval may address either no action, if the current configuration eliminates the unsafe condition, or different actions necessary to address the unsafe condition described in this AD. Such a request should include an assessment of the effect of the changed configuration on the unsafe condition addressed by this AD. In no case does the presence of any modification, alteration, or repair remove any helicopter from the applicability of this AD.

Compliance: Required as indicated, unless accomplished previously.

To prevent loss of the de-icing capabilities of the main rotor blades, adverse performance during flight in icing conditions, and subsequent loss of control of the helicopter, accomplish the following:

(a) From available helicopter records, within the next 10 calendar days, determine the time-in-service (TIS) on each main rotor blade.

(b) Replace each main rotor blade with a main rotor blade that has been modified and reidentified in accordance with Eurocopter Technical Instruction Number (No.) 230b (referenced in Telex Service No. 10002, dated January 17, 1994) in accordance with the following schedule:

(1) If the TIS is equal to or greater than 2,000 hours, replace within the next 50 hours TIS.

(2) If the TIS is equal to or greater than 1,850 hours and less than 2,000 hours, replace on or before attaining 2,050 hours TIS.

(3) If the TIS is equal to or greater than 1,500 hours and less than 1,850 hours, replace within the next 200 hours TIS.

(4) If the TIS is equal to or greater than 1,400 hours and less than 1,500 hours, replace on or before attaining 1,700 hours TIS.

(5) If the TIS is greater than 700 hours and less than 1,400 hours, replace within the next 300 hours TIS.

(6) If the TIS is equal to or less than 700 hours, replace within the next 1,000 hours TIS.

(c) An alternative method of compliance or adjustment of the compliance time that provides an acceptable level of safety may be used if approved by the Manager, Rotorcraft Standards Staff, FAA, Rotorcraft Directorate. Operators shall submit their requests through an FAA Principal Maintenance Inspector, who may concur or comment and then send it to the Manager, Rotorcraft Standards Staff.

Note 2: Information concerning the existence of approved alternative methods of compliance with this AD, if any, may be obtained from the Rotorcraft Standards Staff.

(d) Special flight permits may be issued in accordance with sections 21.197 and 21.199 of the Federal Aviation Regulations (14 CFR 21.197 and 21.199) to operate the helicopter to a location where the requirements of this AD can be accomplished.

Note 3: The subject of this AD is addressed in DGAC (France) AD 95–029–054(B), dated February 1, 1995.

Issued in Fort Worth, Texas, on April 29, 1998.

Eric Bries,

Acting Manager, Rotorcraft Directorate, Aircraft Certification Service.

[FR Doc. 98–12112 Filed 5–6–98; 8:45 am]

BILLING CODE 4910–13–M

FEDERAL MINE SAFETY AND HEALTH REVIEW COMMISSION

29 CFR Part 2700

Rules of Procedure

AGENCY: Federal Mine Safety and Health Review Commission.

ACTION: Proposed rule.

SUMMARY: The Federal Mine Safety and Health Review Commission (the ''Commission'') is an independent adjudicatory agency that provides trial and appellate review of cases arising under the Federal Mine Safety and Health Act of 1977, 30 U.S.C. 801 *et seq.* (1994) (the ''Mine Act''). The Commission's rules of procedure govern practice and procedure in Commission proceedings at both trial and review levels. The Commission is proposing to revise several of its present rules of procedure.

The Commission's present rules of procedure were adopted in June 1979

(*see* 44 FR 38227 (June 29, 1979)), and last amended in May 1993 (*see* 58 FR 12158 (March 3, 1993)). The Commission has determined that certain procedural rules require further revision to address various problems that were unforeseen in 1993, in a further effort to ensure ''the just, speedy, and inexpensive determination of all proceedings'' before the Commission (29 CFR 2700.1(c)).

DATES: Written comments must be submitted on or before August 5, 1998.

ADDRESSES: Comments may be mailed to Norman Gleichman, General Counsel, Office of the General Counsel, Federal Mine Safety and Health Review Commission, 1730 K Street, NW, 6th Floor, Washington, DC 20006. Persons submitting comments shall provide an original and three copies of their comments.

FOR FURTHER INFORMATION CONTACT: Norman M. Gleichman, General Counsel, Office of the General Counsel, 1730 K Street, NW, 6th Floor, Washington, DC 20006, telephone 202–653–5610 (202–566–2673 for TDD Relay). These are not toll-free numbers.

SUPPLEMENTARY INFORMATION:

I. Background

The Commission initially adopted rules of procedure to practice before it in June 1979. *See* 44 FR 38227 (June 29, 1979). The rules were revised only minimally until March 1993. In March 1993, the Commission published the revised procedural rules, which became effective on May 3, 1993. *See* 58 FR 12158 (March 3, 1993). Those rules embodied significant changes brought about by a reexamination of the rules in light of more than ten years' practical experience with their operation and evolving Commission case law.

Since March 1993, the Commission has become aware of several rules that require further revision, clarification, or expansion. These revisions were the subject of consideration by the Commission's administrative law judges, who preside at hearings at the trial level, and Commissioners at the review level.

In the proposed rules, the Commission has revised requirements related to motion practice before the Commission. *See* proposed §§ 2700.9, 2700.10, 2700.70(d), 2700.75(d) and (f). For example, in order to increase efficiency in the Commission's disposition of procedural motions, the Commission proposes requiring a moving party to confer or make reasonable efforts to confer with other parties in a proceeding and to state in the motion whether any party does or does not oppose the motion. *See* proposed § 2700.10. In addition, the Commission proposes changing the deadline for filing requests for extensions of time and allowing such motions and oppositions to those motions to be filed and served by facsimile transmission. *See* proposed §§ 2700.5(d), 2700.7, 2700.9, 2700.75(d). The Commission also proposes instituting a deadline for filing motions requesting extensions of page limits. *See* proposed §§ 2700.70(d), 2700.75(f).

Furthermore, the Commission proposes expanding the requirements for certain pleadings. For instance, under the proposed rules, the Commission would require page numbering for all pleadings. *See* proposed § 2700.5(c). The Commission would also institute a page limit for petitions for discretionary review. *See* proposed § 2700.70(d).

In addition, the Commission proposes to revise and clarify procedures for filing pleadings in temporary reinstatement proceedings. The proposed revisions include the addition of a captioning requirement for petitions for review of temporary reinstatement orders and modifications to the requirements regarding the manner and date of filing pleadings. See proposed §§ 2700.5(d), 2700.7, 2700.45(a) and (f). The Commission proposes to clarify the pleadings on which it will base its ruling and the standard for granting a motion to stay the effect of a temporary reinstatement order. *See* proposed § 2700.45(f).

Because the proposed changes do not constitute a major revision to the Commission's procedural rules, the Commission has not proposed revising § 2700.84, which provides in pertinent part that the procedural rules in part 2700 are effective on May 3, 1993. Notice of the effective date of the amended rules will be published in the **Federal Register** when the rules are published as final rules.

Although these rules are procedural in nature and do not require notice and comment publication under the Administrative Procedure Act (*see* 5 U.S.C. 553(b)(3)(A)), the Commission is inviting and will consider public comment before adopting in final form any revisions to the existing rules. Comments may be mailed to the Commission's General Counsel at the address previously stated. It is requested that comments be filed no later than August 5, 1998. A section-by-section explanation of the proposed changes is set forth below.

II. Section-by-Section Analysis

General Provisions

Section 2700.5 General requirements for pleadings and other documents; status or informational requests.

In order to eliminate unnecessary confusion, paragraph (c) adds the requirement that all documents include page numbers. In addition, consistent with proposed revisions to §§ 2700.9 and 2700.45(f), paragraph (d) adds the provision that the filing of a motion for an extension of time and a petition for review of a temporary reinstatement order is effective upon receipt rather than upon mailing.

Section 2700.7 Service.

Consistent with the proposed changes to §§ 2700.9 and 2700.45(f), paragraph (c) has been revised to specify the circumstances under which requests for extensions of time and petitions for review of temporary reinstatement orders may be served by facsimile transmission. In addition, paragraph (c) has been revised to clarify that service by mail is effective upon mailing for all types of mail, including first class, express, or registered or certified mail, return receipt requested.

Section 2700.9 Extensions of time.

As currently written, § 2700.9 requires that a request for an extension of time be filed before the expiration of the time allowed for filing or serving of the document. The Commission occasionally receives a request for an extension of time on or shortly before the due date for filing or serving of the document. In such instances, the Commission must dispose of the motion prior to the expiration of the time for a response to the motion. The Commission proposes to amend the rule to require that a motion for an extension of time be filed no later than three days prior to the expiration of the time allowed for the filing or serving of the document, and to allow the motion and any opposition of the motion to be filed and served by facsimile transmission. In addition, in accordance with the proposed revisions to § 2700.10, the moving party must confer or make reasonable efforts to confer with other parties and shall state in the motion for a time extension, whether any other party opposes or does not oppose the motion. Finally, in accordance with the proposed revisions to § 2700.10, the Commission may decide that circumstances warrant ruling on the motion prior to the expiration of the time for a response.

Paragraph (b) adds a provision allowing the Commission to grant a

motion for an extension of time in exigent circumstances, even though the request was filed late. In such circumstances, the moving party must show, in writing, the reasons for the party's failure to timely file the request.

Section 2700.10 Motions.

Currently, § 2700.10 does not require that a moving party confer with parties to ascertain whether there is opposition to the motion, or to inform the Commission of any opposition or lack of opposition. As a result, before the Commission disposes of a procedural motion, it must wait for the expiration of the time period for filing a statement in opposition. For some motions requiring prompt or immediate disposition, the Commission must contact other parties or, if such parties are unavailable, dispose of the motion without a response. In order to more efficiently and fairly dispose of such motions, the Commission proposes to amend the rule to require a moving party, prior to filing a procedural motion, to confer or make reasonable efforts to confer with the other parties and to state in the motion if any other party opposes or does not oppose the motion. In addition, the Commission would add the provision that, where circumstances warrant, a motion may be ruled upon prior to the expiration of the time for response, and that a party adversely affected by the ruling may seek reconsideration.

Complaints of Discharge, Discrimination or Interference

Section 2700.45 Temporary reinstatement proceedings.

As currently written, § 2700.45(f) does not differentiate between petitions for review filed pursuant to § 2700.70 and petitions for review of judges' temporary reinstatement decisions. The two types of appeals are, however, procedurally distinct. To highlight this distinction, the Commission proposes to amend the rule to require that petitions filed under § 2700.45(f) be captioned ''Petition for Review of Temporary Reinstatement Order.''

Under section 105(c)(2) of the Mine Act, the Commission is directed to expedite temporary reinstatement proceedings. 30 U.S.C. 815(c)(2). In furtherance of this directive, the Commission proposes to amend § 2700.45(f) as follows: (1) To allow any pleadings in a temporary reinstatement proceeding to be filed and served by facsimile transmission; (2) to provide that the filing of a petition for review of a temporary reinstatement order is effective upon receipt; (3) to require that any response to a petition must be filed within 5 days following service of the petition, rather than 5 days following receipt of the petition, as the rule currently provides; and (4) to clarify that the Commission's ruling on a petition shall be based on the petition and any response, and that any further briefing will be entertained only at the express direction of the Commission. Proposed § 2700.45(f) also clarifies that the petition shall include proof of service on all parties by a means of delivery no less expeditious than that used for filing the petition. The proposed revision allowing pleadings filed under § 2700.45(f) to be served by facsimile transmission is also reflected in proposed § 2700.45(a).

Current § 2700.8, which the Commission does not propose to revise, applies to proposed § 2700.45(f), as well as other sections. Accordingly, if a petition for review of a temporary reinstatement order is served by mail, under current § 2700.8, 5 days would be added to the time allowed by proposed § 2700.45(f) for the filing of any response to the petition.

Presently, a petition for review under § 2700.45(f) does not stay the effect of a judge's temporary reinstatement order. Although operators have moved to stay the effect of the order when filing a petition, in *Secretary of Labor on behalf of Bowling* v. *Perry Transport, Inc.*, 15 FMSHRC 196 (February 1993), the Commission, in denying such a motion, stated that ''[a]bsent some extraordinary circumstance, yet to be advanced, the granting of such a motion would eviscerate the temporary reinstatement provision of the Mine Act.'' *Id.* at 198. The Commission proposes to codify this holding of *Perry Transport* by explicitly providing in § 2700.45(f) that the Commission will grant a motion to stay the effect of a temporary reinstatement order only under extraordinary circumstances.

Review by the Commission

Section 2700.70 Petitions for discretionary review.

Paragraph (a) has been revised to clarify that procedures governing petitions for review of temporary reinstatement orders may be found in proposed § 2700.45(f). In addition, paragraph (d) adds a 35-page limit for petitions for discretionary review. Under the present rule, there is no page number limitation for petitions for discretionary review. In order to promote brevity and concision in pleading, the Commission would set a page limit for petitions for discretionary review identical to the page limit for a petitioner's opening brief. Consistent with proposed changes to § 2700.75, the Commission also proposes revising § 2700.70(d) to institute a deadline for filing a motion requesting an extension of the 35-page limit, and to provide that an extension in page limit will be permitted by the Commission for good cause shown.

Section 2700.75 Briefs.

Under the present rule, a motion for an extension of time to file a brief must be filed within the time limit prescribed for filing the brief. The Commission would revise § 2700.75 to require that such motions comply with the proposed revisions to § 2700.9. *See* proposed § 2700.75(d).

In addition, the Commission would revise § 2700.75 to institute a deadline for filing a motion requesting an extension of page limit for a brief. *See* proposed § 2700.75(f). The Commission often receives a motion requesting an extension of page limit and an attached brief that exceeds the page limit on, or shortly before, the date that the brief is due to be filed. In such instances, the Commission must contact other parties to determine whether the motion is opposed or, if such parties are unavailable, dispose of the motion without a response. If the Commission were to deny the motion, the filing party would have little time, if any, to file another brief that conforms to the page limit. In order to avoid this harsh result, the Commission on occasion has been effectively denied an opportunity to give full consideration to whether a page extension is necessary and, if so, the amount that the limit should be exceeded. Therefore, the Commission proposes to amend the rule by requiring that a motion requesting an extension of page limit: (1) Be filed not less than 10 days prior to the date that the brief is due to be filed; (2) state the approximate length of the extension required; and (3) comply with the requirements of proposed section 2700.10, including the requirement that a motion state whether any other party opposes or does not oppose the motion. Finally, the Commission would revise § 2700.75(c) to specify that an extension in page limit will be permitted by the Commission for good cause shown.

Section 2700.76 Interlocutory review.

Paragraph (a) has been revised to clarify that procedures governing petitions for review of temporary reinstatement orders may be found in proposed § 2700.45(f).

Matters of Regulatory Procedure

The Commission has determined that these rules are not subject to Office of

Management and Budget Review under Executive Order 12866.

The Commission has determined under the Regulatory Flexibility Act (5 U.S.C. 601–612) that these rules, if adopted, would not have a significant economic impact on a substantial number of small entities. Therefore, a Regulatory Flexibility Statement and Analysis has not been prepared.

The Commission has determined that the Paperwork Reduction Act (44 U.S.C. 3501 *et seq.*) does not apply because these rules do not contain any information collection requirements that require the approval of the Office of Management and Budget.

List of Subjects in 29 CFR Part 2700

Administrative practice and procedure, Ex parte communications, Lawyers, Penalties.

For the reasons set out in the preamble, it is proposed to amend 29 CFR part 2700 as follows:

PART 2700—PROCEDURAL RULES

1. The authority citation for part 2700 continues to read as follows:

Authority: 30 U.S.C. 815 and 823.

2. Section 2700.5 is amended by revising paragraphs (c) and (d) to read as follows:

§ 2700.5 General requirements for pleadings and other documents; status or informational requests.

* * * * *

(c) *Necessary information.* All documents shall be legible and shall clearly identify on the cover page the filing party by name. All documents shall be dated and shall include the assigned docket number, page numbers, and the filing person's address and telephone number. Written notice of any change in address or telephone number shall be given promptly to the Commission or the Judge and all other parties.

(d) *Manner and date of filing.* A notice of contest of a citation or order, a petition for assessment of penalty, a complaint for compensation, a complaint of discharge, discrimination or interference, an application for temporary reinstatement, and an application for temporary relief shall be filed by personal delivery, including courier service, or by registered or certified mail, return receipt requested. All subsequent documents that are filed with a Judge or the Commission may be filed by first class mail, including express mail, or by personal delivery. When filing is by personal delivery, filing is effective upon receipt. When filing is by mail, filing is effective upon mailing, except that the filing of a petition for discretionary review, a petition for review of a temporary reinstatement order, and a motion for extension of time is effective upon receipt. *See* §§ 2700.9, 2700.45(f), and 2700.70. Filing by facsimile transmission is permissible only when specifically permitted by these rules (*see* §§ 2700.9, 2700.45(f), 2700.52 and 2700.70), or when otherwise allowed by a Judge or the Commission. Filing by facsimile transmission is effective upon receipt.

* * * * *

3. Section 2700.7 is amended by revising paragraph (c) to read as follows:

§ 2700.7 Service.

* * * * *

(c) *Methods of service.* A notice of contest of a citation or order, a proposed penalty assessment, a petition for assessment of penalty, a complaint for compensation, a complaint of discharge, discrimination or interference, an application for temporary reinstatement, and an application for temporary relief shall be served by personal delivery, including courier service, or by registered or certified mail, return receipt requested. All subsequent papers may be served by personal delivery or by first class mail, including express mail service, except as specified in §§ 2700.9 and 2700.45 (extensions of time and temporary reinstatement proceedings). Service by mail, including first class, express, or registered or certified mail, return receipt requested, is effective upon mailing. Service by personal delivery is effective upon receipt. When filing by facsimile transmission (*see* § 2700.5(d)), the filing party must also serve by facsimile transmission or by a means as expeditious as facsimile. Service by facsimile transmission is effective upon receipt.

* * * * *

4. Section 2700.9 is revised to read as follows:

§ 2700.9 Extensions of time.

(a) The time for filing or serving any document may be extended for good cause shown. Filing of a motion requesting an extension of time, including a facsimile transmission, is effective upon receipt. A motion requesting an extension of time shall be received no later than 3 days prior to the expiration of the time allowed for the filing or serving of the document, and shall comply with § 2700.10. The motion shall include proof of service on all parties by a means of delivery no less expeditious than that used for filing the motion. A motion requesting an extension of time and a statement in opposition to such a motion may be filed and served by facsimile.

(b) In exigent circumstances, an extension of time may be granted even though the request was filed after the designated time for filing has expired. In such circumstances, the party requesting the extension must show, in writing, the reasons for the party's failure to make the request before the time prescribed for the filing had expired.

5. Section 2700.10 is amended by redesignating paragraph (c) as (d), revising newly redesignated paragraph (d) and by adding a new paragraph (c) to read as follows:

§ 2700.10 Motions.

* * * * *

(c) Prior to filing a procedural motion, the moving party shall confer or make reasonable efforts to confer with the other parties and shall state in the motion if any other party opposes or does not oppose the motion.

(d) A statement in opposition to a written motion may be filed by any party within 10 days after service upon the party. Unless otherwise ordered, oral argument on motions will not be heard. Where circumstances warrant, a motion may be ruled upon prior to the expiration of the time for response; a party adversely affected by the ruling may seek reconsideration.

6. Section 2700.45 is amended by revising paragraphs (a) and (f) to read as follows:

§ 2700.45 Temporary reinstatement proceedings.

(a) *Service of pleadings.* A copy of each document filed with the Commission in a temporary reinstatement proceeding shall be served on all parties by personal delivery, including courier service, by certified or registered mail, return receipt requested or, as specified in paragraph (f) of this section, by facsimile transmission.

* * * * *

(f) *Review of order.* Review by the Commission of a Judge's written order granting or denying an application for temporary reinstatement may be sought by filing with the Commission a petition, which shall be captioned ''Petition for Review of Temporary Reinstatement Order,'' with supporting arguments, within 5 days following receipt of the Judge's written order. The filing of any such petition is effective upon receipt. The petition shall include proof of service on all parties by a means of delivery no less expeditious than that used for filing the petition.

The filing and service of any pleadings under this rule may be made by facsimile transmission. The filing of a petition shall not stay the effect of the Judge's order unless the Commission so directs; a motion for such a stay will be granted only under extraordinary circumstances. Any response shall be filed within 5 days following service of a petition. The Commission's ruling on a petition shall be made on the basis of the petition and any response (any further briefs will be entertained only at the express direction of the Commission), and shall be rendered within 10 days following receipt of any response or the expiration of the period for filing such response. In extraordinary circumstances, the Commission's time for decision may be extended.

* * * * *

7. Section 2700.70 is amended by revising paragraphs (a) and (d) to read as follows:

§ 2700.70 Petitions for discretionary review.

(a) *Procedure.* Any person adversely affected or aggrieved by a Judge's decision or order may file with the Commission a petition for discretionary review within 30 days after issuance of the decision or order. Filing of a petition for discretionary review, including a facsimile transmission, is effective upon receipt. Two or more parties may join in the same petition; the Commission may consolidate related petitions. Procedures governing petitions for review of temporary reinstatement orders are found at § 2700.45(f).

* * * * *

(d) *Requirements.* Each issue shall be separately numbered and plainly and concisely stated, and shall be supported by detailed citations to the record, when assignments of error are based on the record, and by statutes, regulations, or other principal authorities relied upon. Except by permission of the Commission and for good cause shown, petitions for discretionary review shall not exceed 35 pages. A motion requesting an extension of the page limit shall be filed not less than 10 days prior to the date the petition for discretionary review is due to be filed, shall state the approximate length of the extension required, and shall comply with § 2700.10. Except for good cause shown, no assignment of error by any party shall rely on any question of fact or law upon which the Judge had not been afforded an opportunity to pass.

* * * * *

8. Section 2700.75 is amended by revising paragraphs (c) and (d), by redesignating paragraph (f) as (g), and by adding a new paragraph (f) to read as follows:

§ 2700.75 Briefs.

* * * * *

(c) *Length of brief.* Except by permission of the Commission and for good cause shown, opening briefs shall not exceed 35 pages, response briefs shall not exceed 25 pages, and reply briefs shall not exceed 15 pages. A brief of an amicus curiae shall not exceed 25 pages. A brief of an intervenor shall not exceed the page limitation applicable to the party whose position it supports in affirming or reversing the Judge, or if a different position is taken, such brief shall not exceed 25 pages. Tables of contents or authorities shall not be counted against the length of a brief.

(d) *Motion for extension of time.* A motion for an extension of time to file a brief shall comply with § 2700.9. The Commission may decline to accept a brief that is not timely filed.

* * * * *

(f) *Motion for extension of page limit.* A motion requesting an extension of the page limit for a brief shall be filed not less than 10 days prior to the date the brief is due to be filed, shall state the approximate length of the extension required, and shall comply with § 2700.10.

* * * * *

9. Section 2700.76 is amended by revising paragraph (a) to read as follows:

§ 2700.76 Interlocutory review.

(a) *Procedure.* Interlocutory review by the Commission shall not be a matter of right but of the sound discretion of the Commission. Procedures governing petitions for review of temporary reinstatement orders are found at § 2700.45(f).

* * * * *

Mary Lu Jordan,

Chairman, Federal Mine Safety and Health Review Commission.

[FR Doc. 98–12157 Filed 5–6–98; 8:45 am]

BILLING CODE 6735–01–P

DEPARTMENT OF THE INTERIOR

Minerals Management Service

30 CFR Parts 218, 250, and 256

RIN 1010–AC32

Postlease Operations Safety

AGENCY: Minerals Management Service (MMS), Interior.

ACTION: Extension of comment period for proposed rule.

SUMMARY: This notice extends to July 17, 1998, the deadline for submitting comments on the proposed rule on Postlease Operations Safety.

DATES: We will consider all comments received by July 17, 1998, and we may not fully consider comments received after July 17, 1998.

ADDRESSES: Mail or hand-carry written comments (three copies) to the Department of the Interior; Minerals Management Service; 381 Elden Street; Mail Stop 4024; Herndon, Virginia 20170–4817; Attention: Rules Processing Team.

FOR FURTHER INFORMATION CONTACT: Kumkum Ray, Engineering and Operations Division, at (703) 787–1600.

SUPPLEMENTARY INFORMATION: MMS was asked to extend the deadline for submitting comments on the proposed Postlease Operations Safety rule published on February 13, 1998 (63 FR 7335) and the correction to the proposed rule published on March 9, 1998 (63 FR 11385). The request explains that the proposed rule has a number of important changes that require careful consideration for comprehensive comments. Because the proposed rule was rewritten in ''plain English'' and sections, paragraphs, and sentences do not have the same order and numbering sequence as the current regulations in 30 CFR part 250, subpart A, additional time was requested to sort out the proposed rule for comparison.

Dated: May 1, 1998.

E. P. Danenberger,

Chief, Engineering and Operations Division.

[FR Doc. 98–12057 Filed 5–6–98; 8:45 am]

BILLING CODE 4310–MR–M

DEPARTMENT OF TRANSPORTATION

Coast Guard

33 CFR Part 100

[CGD07–98–024]

RIN 2115–AE46

Special Local Regulations; Deerfield Beach, FL

AGENCY: Coast Guard, DOT.

ACTION: Notice of proposed rulemaking.

SUMMARY: The Coast Guard is proposing to establish permanent special local regulations for the Annual Deerfield Beach Super Boat Grand Prix powerboat race. This event will be held annually offshore Deerfield Beach on the third Sunday of July, between 12:30 p.m. and 4 p.m. Eastern Daylight Time (EDT). These regulations are necessary to

provide for the safety of life on navigable waters during the event.

DATES: Comments must be received on or before June 8, 1998.

ADDRESSES: Comments may be mailed to U.S. Coast Guard Group Miami, 100 MacArthur Causeway Miami Beach, Florida 33139, or may be delivered to the Operations Department at the same address between 7 a.m. and 3:30 p.m., Monday through Friday, except federal holidays. The telephone number is (305) 535–4448. Comments will become a part of the public docket and will be available for copying and inspection at the same address.

FOR FURTHER INFORMATION CONTACT: QMCS T. Kjerulff, Coast Guard Group Miami, FL at (305) 535–4448.

SUPPLEMENTARY INFORMATION:

Request for Comments

The Coast Guard encourages interested persons to participate in this rulemaking by submitting written data, views or arguments. Persons submitting comments should include their names and addresses, identify the rulemaking (CGD07–98–024) and the specific section of this proposal to which each comment applies, and give the reason for each comment.

The Coast Guard will consider all comments received during the comment period It may change this proposal in view of the comments received. The Coast Guard plans no public hearing. Persons may request a public hearing by writing to the address under **ADDRESSES.** The request should include the reasons why a hearing would be beneficial. If it determines that the opportunity for oral presentations will aid this rulemaking, the Coast Guard will hold a public hearing at a time and place announced by a later notice in the **Federal Register**.

Background and Purpose

Each year in July, Super Boat International Productions Inc., sponsors a high speed power boat race with approximately thirty-five (35) race boats, ranging in length from 24 to 50 feet, participating in the event. There are approximately two hundred (200) spectator craft. The race takes place in the Atlantic Ocean 1,000 feet off Deerfield Beach. The race boats compete at high speeds with numerous spectator craft in the area, creating an extra or unusual hazard in the navigable waterways. These regulations will prohibit entry into the regulated area by non-participating vessels, and will establish spectator craft areas for boaters to safely watch the race.

Regulatory Evaluation

This is not a significant regulatory action under section 3(f) of Executive Order 12866 and does not require an assessment of potential costs and benefits under section 6(a)(3) of that Order. It has been exempted from review by the Office of Management and Budget under that order. It is not significant under the regulatory policies and procedures of the Department of Transportation (DOT) (44 FR 11040; February 26, 1979). The Coast Guard expects the economic impact of this proposed rule to be so minimal that a full regulatory Evaluation under paragraph 10e of the regulatory policies and procedures of DOT is unnecessary. Entry into the regulated area is prohibited for only 4.5 hours annually on the day of the event.

Small Entities

Under the Regulatory Flexibility Act (5 U.S.C. 601 et seq.), the Coast Guard must consider whether this proposed rule, if adopted, will have a significant economic impact on a substantial number of small entities. ''Small entities'' include small businesses, not-for-profit organizations that are independently owned and operated and are not dominant in their fields, and governmental jurisdiction with populations of less than 50,000.

Therfore, the Coast Guard certifies under 5 U.S.C. 605(b) that this proposed rule, if adopted, would not have a significant economic impact on a substantial number of small entities as the regulations would only be in effect for approximately 4.5 hours for one day each year in a limited area offshore Deerfield Beach. If, however, you think that your business or organization qualifies as a small entity and that this proposed rule will have a significant economic impact on your business or organization, please submit a comment (see **ADDRESSES**) explaining why you think it qualifies and in what way and to what degree this proposed rule will economically affect it.

Collection of Information

These proposed regulations contain no collection of information requirements under the Paperwork Reduction Act (44 U.S.C. 3501 et seq.).

Federalism

This action has been analyzed in accordance with the principles and criteria contained in Executive Order 12612, and it has been determined that the rulemaking does not have sufficient federalism implications to warrant the preparation of a Federalism Assessment.

Environmental Assessment

The Coast Guard has considered the environmental impact of this proposal consistent with Section 2.B.2.a (CE #34(h)) of Commandant Instruction M16475.1C, and has determined that this action is categorically excluded from further environmental documentation.

List of Subjects in 33 CFR Part 100

Marine safety, Navigation (water), Reporting and recordkeeping requirements, Waterways.

Proposed Regulations

In consideration of the foregoing, the Coast Guard proposes to amend Part 100 of Title 33, Code of Federal Regulations, as follows:

PART 100—[AMENDED]

1. The authority citation for part 100 continues to read as follows:

Authority: 33 U.S.C. 1233, 49 CFR 1.46 and 33 CFR 100.35.

2. A new § 100.733 is added to read as follows:

§ 100.733 Annual Deerfield Beach Super Boat Race, Deerfield Beach, FL

(a) *Regulated areas.*—(1) *Regulated Areas.* An area within a line joining the following points:

Corner point 1: 26–19.7N—080–04.4W
Corner point 2: 26–19.7N—080–03.9W
Corner point 3: 26–15.7N—080–04.4W
Corner point 4: 26–15.7N—080–04.9W. All coordinates reference Datum: NAD 83.

(2) *Spectator Area.* A spectator area is established in the vicinity of the regulated area for spectator traffic and is defined by a line joining the following points:

Corner point 1: 26–15.7N—080–03.9W
Corner point 2: 26–15.7N—080–04.1W
Corner point 3: 26–19.7N—080–03.7W
Corner point 4: 26–19.7N—080–03.5W. All coordinates reference Datum: NAD 83.

(3) *Buffer Zone.* A buffer zone of 406 yards separates the racecourse and the spectator fleet.

(b) *Special local regulations.* (1) Entry into the regulated area by other than event participants is prohibited unless otherwise authorized by the Patrol Commander. At the completion of scheduled races and the departure of participants from the regulated area, traffic may resume normal operations. Traffic may be permitted to resume normal operations between scheduled racing events at the discretion of the Patrol Commander.

(2) A succession of not fewer than 5 short whistle or horn blasts from a patrol vessel will be the signal for any

and all vessels to take immediate steps to avoid collision. The display of an orange distress smoke signal from a patrol vessel will be the signal for any and all vessels to stop immediately.

(3) Spectators required to maintain a safe distance from the racecourse at all times.

(b) *Effective Date:* This section becomes effective annually at 12 p.m. and terminates at 4:30 p.m. EDT, on the third Sunday of July.

Dated: April 24, 1998.

R.C. Olsen, Jr.,

Captain, U.S. Coast Guard, Acting Commander, Seventh Coast Guard District.

[FR Doc. 98–12138 Filed 5–6–98; 8:45 am]

BILLING CODE 4910–15–M

DEPARTMENT OF TRANSPORTATION

Coast Guard

33 CFR Part 165

[CGD11–98–005]

RIN 2115–AA97

Safety/Security Zone; San Francisco Bay, San Pablo Bay, Carquinez Straits, and Suisun Bay, CA

AGENCY: Coast Guard, DOT.

ACTION: Notice of proposed rulemaking.

SUMMARY: The Coast Guard proposes to establish a moving safety/security zone around vessels transporting foreign research reactor spent nuclear materials on the navigable waters of San Francisco Bay, San Pablo Bay, Carquinez Straits, and Suisun Bay, CA. The zone will extend 200 yards ahead and astern, and 100 yards to each side of each vessel carrying the nuclear materials, during transit from buoys 7 and 8 in the San Francisco Bay Traffic Lane to the Weapons Support Facility Seal Beach Detachment Concord on Suisun Bay. When the vessel is safely moored at the Weapons Support Facility, the zone will close to encompass all waters within 100 yards of the vessels and will remain so until all nuclear materials cargo handling operations have been completed.

The purpose of this safety/security zone are two-fold: To ensure the safety of the participant transport vessels and crew, and of all other vessels and crew in the vicinity of the participant transport vessels; and to ensure the security of the participant transport vessels, and of the property of the United States Government contained on those vessels, against sabotage or other subversive and/or disruptive acts. No persons or vessels will be allowed to enter, operate, or anchor within this zone, except as may be authorized by Commander, Eleventh Coast Guard District, or his designated representative.

DATES: Comments must be received on or before July 6, 1998.

FOR FURTHER INFORMATION CONTACT: Lieutenant Commander Mark Dix, Coast Guard Marine Safety Office San Francisco Bay, at (510) 437–3073, between the hours of 7:30 a.m. and 4 p.m. PDT, Monday through Friday, except federal holidays.

ADDRESSES: U.S. Coast Guard Marine Safety Office San Francisco Bay, Building 14, Coast Guard Island, Alameda, CA 94501–5100.

SUPPLEMENTARY INFORMATION:

Request for Comments

Interested persons are invited to participate in this rulemaking by submitting written views, data, or arguments. Persons submitting comments should include their names and addresses, identifying this proposal by docket number (CGD11–98–005) and the specific section of this proposal to which their comments apply, and give reasons for each comment. Receipt of comments will be acknowledged if a stamped, self-addressed postcard or envelope is enclosed. All comments received before the expiration of the comment period will be considered before final action is taken on this proposal. The proposed rule may be changed in light of comments received. No public hearing on this proposal is planned, but one may be held if written requests for a hearing are received and it is determined that the opportunity for oral presentation will enhance the rulemaking process.

Background and Purpose

As part of a major national security objective to further the objectives of the 1968 Treaty On Non-Proliferation of Nuclear Weapons, the United States Department of Energy (DOE) will be receiving shipments of foreign research reactor spent nuclear fuel at the Weapons Support Facility Seal Beach Detachment Concord in Concord, CA. As such, DOE is responsible for the shipments necessitating promulgation of this safety/security zone.

The Coast Guard proposes to establish a moving safety/security zone around each vessel transporting these foreign research reactor spent nuclear materials on behalf of DOE and the United States Government on the navigable waters of San Francisco Bay, San Pablo Bay, Carquinez Straits, and Suisun Bay, CA, and at the Weapons Support Facility Seal Beach Detachment Concord.

The Coast Guard does not anticipate that maritime traffic will be significantly impacted by the promulgation of this safety/security zone because DOE has advised that there will be irregular and infrequent shipments, and that expeditious transits will be scheduled for days and times of light maritime traffic so as to maximize safety and minimize any delay or inconvenience caused by the shipments. The purposes of this safety/security zone are two-fold: (1) Pursuant to 33 CFR 165.23, to ensure that safety of the participant transport vessels and crew, and of all other vessels and crew in the vicinity of the participant transport vessels; and, (2) pursuant to 33 CFR 165.33, to ensure the security of the participant transport vessels, and of the property of the United States Government contained on those vessels, against sabotage or other subversive and/or disruptive acts.

Discussion and Proposed Rule

The proposed safety/security zone will extend 200 yards ahead and astern, and 100 yards to each side of vessels carrying the nuclear materials, during transit from buoys 7 and 8 in the San Francisco Bay Traffic Lane (LLNR 4190 & 4195, positions 37°46.9′N, 122°35.4′W & 37°46.5′N, 122°35.2′W, respectively) to the Weapons Support Facility Seal Beach Detachment Concord on Suisun Bay (position 38°03.3′N, 122°02.5′W). Once the vessel is safety moored, the zone will close to encompass all waters within 100 yards of the vessel and will remain so until all nuclear materials cargo handling operations have been completed. No persons or vessels will be allowed to enter, operate, or anchor, including any emergency mooring or anchoring, within this zone during the vessel's transit and subsequent cargo handling operations except as may be authorized by Commander, Eleventh Coast Guard District, or his designated representative.

DOE anticipates that these shipments will take place at irregular intervals for an undetermined period of years. Thus, the actual dates and times that this safety/security zone will be activated are not known by the Coast at this time. The Eleventh Coast Guard District Commander will cause notice of the activation of this safety/security zone to be made by all appropriate means to effect the widest publicity among the affected segments of the public, including publication in the **Federal Register** as practicable, in accordance with the provisions of 33 CFR 165.7(a); such means of announcement may include, but are not limited to,

Broadcast Notice to Mariners. The Coast Guard will also issue a Broadcast Notice to Mariners notifying the public when nuclear materials cargo handling has been completed.

Regulatory Evaluation

This proposal is not a significant regulatory action under section 3(f) of Executive Order 12866 and does not require an assessment of potential costs and benefits under section 6(a)(3) of that order. It has been exempted from review by the Office of Management and Budget under that order. It is not significant under the regulatory policies and procedures of the Department of Transportation (DOT) (44 FR 11040; February 26, 1979). The Coast Guard expects the economic impact of this proposal to be so minimal that a full Regulatory Evaluation under paragraph 10e of the regulatory policies and procedures of DOT is unnecessary. Maritime traffic will not be significantly impacted because of the infrequent transits necessitating activation of this safety zone, and the limited duration of the zone during transit and cargo operations.

Small Entities

Under the Regulatory Flexibility Act (5 U.S.C. 601 *et seq.*), the Coast Guard must consider whether this proposal will have a significant economic impact on a substantial number of small entities. ''Small entities'' may include small businesses and not-for-profit organizations that are not dominant in their respective fields, and governmental jurisdictions with populations less than 50,000. For the same reasons set forth in the above Regulatory Evaluation, the Coast Guard certifies under 5 U.S.C. 605(b) that this proposal, if adopted, is not expected to have a significant economic impact on any substantial number of entities, regardless of their size.

Assistance for Small Entities

In accordance with 213(a) of the Small Business Regulatory Enforcement Fairness Act of 1996 (Pub. L. 104–121), the Coast Guard wants to assist small entities in understanding this proposed rule so that they can better evaluate its effects on them and participate in the rulemaking process. If your small business or organization is affected by this rule and you have questions concerning its provisions or options for compliance, please contact LCDR Mark Dix, Coast Guard Marine Safety Office San Francisco Bay, at the address listed in **ADDRESSES**.

Collection of Information

This rule contains no collection-of-information requirements under the Paperwork Reduction Act (44 U.S.C. 3501 *et seq.*).

Federalism

The Coast Guard has analyzed this proposal under the principles and criteria contained in Executive Order 12612 and has determined that this proposed rule does not have sufficient Federalism implications to warrant the preparation of a Federalism Assessment.

Environmental Assessment

The Coast Guard has considered the environmental impact of this rulemaking in accordance with Figure 2–1, paragraph (34)(g), of Commandant Instruction M16475.1C, and has determined that this particular action is categorically excluded from further environmental documentation. A Categorical Exclusion Determination and Environmental Analysis Checklist is in file in the rulemaking docket, and is available for inspection at the address shown above in the paragraph entitled **FOR FURTHER INFORMATION CONTACT**.

A copy of DOE's ''Final Environmental Impact Statement on a Proposed Nuclear Weapons Nonproliferation Policy Concerning Foreign Research Reactor Spent Nuclear Fuel'' has also been placed in the rulemaking docket and is available for inspection at the address shown above in the paragraph entitled **FOR FURTHER INFORMATION CONTACT**. To request your own copy of this document, contact: Charles Head, Program Manager, Office of Spent Nuclear Fuel Management (EM–67), U.S. Department of Energy, 1000 Independence Avenue, SW, Washington, DC 20585.

Unfunded Mandates

Under the Unfunded Mandates Reform Act of 1995 (Pub. L. 104–4), the Coast Guard must consider whether this rule will result in an annual expenditure by state, local, and tribal governments, in the aggregate of $100 million (adjusted annually for inflation). If so, the Act requires that a reasonable number of regulatory alternatives be considered, and that from those alternatives, the least costly, most cost-effective, or least burdensome alternative that achieves the objective of the rule be selected.

No state, local, or tribal government entities will be affected by this rule, so this rule will not result in annual or aggregate costs of $100 million or more. Therefore, the Coast Guard is exempt from any further regulatory requirements under the Unfunded Mandates Act.

List of Subjects in 33 CFR Part 165

Harbors, Marine safety, Navigation (water), Reporting and recordkeeping requirements, Safety measures, Waterways.

Proposed Regulations

In consideration of the foregoing, the Coast Guard proposes to amend subpart F of part 165 of Title 33, Code of Federal Regulations, as follows:

PART 165—[AMENDED]

1. The authority citation for part 165 continues to read as follows:

Authority: 33 U.S.C. 1231; 50 U.S.C. 191; 33 CFR 1.05–1(g), 6.04–1, 6.04–6, and 150.5; 49 CFR 1.46.

2. A new § 165.1115 is added to read as follows:

§ 165.1115 Safety/Security Zone: San Francisco Bay, San Pablo Bay, Carquinez Straits, and Suisun Bay, CA.

(a) *Regulated area.* The following area is established as a safety/security zone:

(1) All waters 200 yards ahead and astern and 100 yards to each side of every vessel transporting nuclear materials on behalf of the United States Department of Energy while such vessels transit from a line drawn between buoys 7 and 8 in the San Francisco Bay Traffic Lane (LLNR 4190 & 4195, positions 37°46.9′N, 122°35.4′W & 37°46.5′N, 122°35.2′W, respectively) until safely moored to the Weapons Support Facility Seal Beach Detachment Concord on Suisun Bay (position 38°03.3′N, 122°02.5′W).

All coordinates referenced use datum: NAD 1983.

(2) All waters within 100 yards of each vessel described in paragraph (a)(1) of this section while moored at the Weapons Support Facility Seal Beach Detachment Concord until all nuclear materials cargo handling operations have been completed.

(b) *Notification.* Commander, Eleventh Coast District, will cause notice of the activation of this safety/security zone to be made by all appropriate means to effect the widest publicity among the affected segments of the public, including publication in the **Federal Register** as practicable, in accordance with the provisions of 33 CFR 165.7(a); such means of announcement may include, but are not limited to, Broadcast Notice to Mariners. The Coast Guard will issue a Broadcast Notice to Mariners notifying the public when nuclear materials cargo handling has been completed.

(c) *Effective Period.* The safety/security zone will be effective

commencing at the time any vessel described in paragraph (a)(1) of this section enters the zone described in paragraph (a)(1) of this section and will remain in effect until all spent nuclear materials cargo handling operations have been completed at Weapons Support Facility Seal Beach Detachment Concord.

(d) *Regulations.* The general regulations governing safety and security zones contained in both 33 CFR 165.23 and in 33 CFR 165.33 apply. Entry into, transit through, or anchoring within this safety/security zone is prohibited unless authorized by Commander, Eleventh Coast Guard District, or his designated representative.

Dated: April 21, 1998.

J.C. Card,

Vice Admiral, U.S. Coast Guard Commander, Eleventh Coast Guard District.

[FR Doc. 98–12137 Filed 5–6–98; 8:45 am]

BILLING CODE 4910–15–M

ENVIRONMENTAL PROTECTION AGENCY

40 CFR Part 52

[MO 047–1047; FRL–6010–8]

Approval and Promulgation of Implementation Plans; State of Missouri

AGENCY: Environmental Protection Agency (EPA).

ACTION: Proposed rule.

SUMMARY: The EPA is proposing to approve the State Implementation Plan (SIP) revisions submitted by the state of Missouri to broaden the current visible emission rule exceptions to include smoke generating devices. This revision would allow smoke generators to be used for military and other types of training when operated under applicable requirements.

DATES: Comments must be received on or before June 8, 1998.

ADDRESSES: Comments may be mailed to Kim Johnson, U.S. Environmental Protection Agency, Air Branch, 726 Minnesota Avenue, Kansas City, Kansas 66101.

FOR FURTHER INFORMATION CONTACT: Kim Johnson at (913) 551–7975.

SUPPLEMENTARY INFORMATION: This amendment broadens the current visible emission rule exceptions to include smoke generating devices in general, when a required permit or a written determination that a permit is not required has been issued. The visible emission rule 10 CSR 10–3.080 is a general limit on opacity from all contaminated sources located in certain geographic areas in Missouri. The amendment adds certain categories such as smoke-generating devices to the list of sources exempted from the opacity limit. The amendment defines a smoke generating device as a specialized piece of equipment which is not an integral part of a commercial, industrial, or manufacturing process, and whose sole purpose is the creation and dispersion of fine solid or liquid particles in a gaseous medium. This revision would allow smoke generators to be used for military training at such facilities as Fort Leonard Wood, as long as such facilities are subject to applicable permit requirements.

A modeling analysis was used to predict air quality impacts for Fort Leonard Wood Smoke Training School. Based on the modeling analysis, the proposed smoke training at Fort Leonard Wood, if operated under the requirements listed in the prevention of significant deterioration (PSD) permit, will not exceed the maximum allowable PSD PM_{10} increment of 30 $\mu g/m^3$ based on a 24-hour average, and will not cause or contribute to a violation of the PM_{10} national ambient air quality standards.

The amendment only exempts units which are subject to permit limits containing restrictions which ensure that air quality standards will not be violated, and units with *de minimis* emissions which have been determined by Missouri to be exempt from permitting. The EPA believes that the exemption will not interfere with attainment and maintenance of the ambient air quality standards.

Proposed Action

The EPA is proposing to approve as a revision to the SIP the amendment to rule 10 CSR 10–3.080, ''Restriction of Emission of Visible Air Contaminants,'' submitted by the state of Missouri on July 10, 1996.

Nothing in this action should be construed as permitting or allowing or establishing a precedent for any future request for revision to any SIP. Each request for revision to the SIP shall be considered separately in light of specific technical, economic, and environmental factors, and in relation to relevant statutory and regulatory requirements.

Administrative Requirements

A. Executive Order 12866

The Office of Management and Budget has exempted this regulatory action from Executive Order 12866 review.

B. Regulatory Flexibility Act

Under the Regulatory Flexibility Act, 5 U.S.C. 600 et seq., the EPA must prepare a regulatory flexibility analysis assessing the impact of any proposed or final rule on small entities (5 U.S.C. 603 and 604). Alternatively, the EPA may certify that the rule will not have a significant impact on a substantial number of small entities. Small entities include small businesses, small not-for-profit enterprises, and government entities with jurisdiction over populations of less than 50,000.

SIP approvals under section 110 and subchapter I, Part D of the Clean Air Act (CAA) do not create any new requirements but simply approve requirements that the state is already imposing. Therefore, because the Federal SIP approval does not impose any new requirements, the Administrator certifies that it does not have a significant impact on any small entities affected. Moreover, due to the nature of the Federal-state relationship under the CAA, preparation of a regulatory flexibility analysis would constitute Federal inquiry into the economic reasonableness of state action. The CAA forbids the EPA to base its actions concerning SIPs on such grounds (*Union Electric Co.* v. *U.S. E.P.A.*, 427 U.S. 246, 256–66 (S.Ct. 1976); 42 U.S.C. 7410(a)(2)).

C. Unfunded Mandates

Under section 202 of the Unfunded Mandates Reform Act of 1995 (''Unfunded Mandates Act''), signed into law on March 22, 1995, the EPA must prepare a budgetary impact statement to accompany any proposed or final rule that includes a Federal mandate that may result in estimated costs to state, local, or tribal governments in the aggregate, or to private sector, of $100 million or more. Under section 205, the EPA must select the most cost-effective and least burdensome alternative that achieves the objectives of the rule and is consistent with statutory requirements. Section 203 requires the EPA to establish a plan for informing and advising any small governments that may be significantly or uniquely impacted by the rule.

The EPA has determined that the approval action proposed does not include a Federal mandate that may result in estimated costs of $100 million or more to either state, local, or tribal governments in the aggregate, or to the private sector. This Federal action approves preexisting requirements under state or local law, and imposes no new requirements. Accordingly, no

additional costs to state, local, or tribal governments, or to the private sector, result from this action.

List of Subjects in 40 CFR Part 52

Environmental protection, Air pollution control, Incorporation by reference, Particulate matter, Reporting and recordkeeping requirements.

Authority: 42 U.S.C. 7401 *et seq.*

Dated: April 14, 1998.

Dennis Grams,

Regional Administrator, Region VII.

[FR Doc. 98–12149 Filed 5–6–98; 8:45 am]

BILLING CODE 6560–50–P

Notices

Federal Register
Vol. 63, No. 88
Thursday, May 7, 1998

This section of the FEDERAL REGISTER contains documents other than rules or proposed rules that are applicable to the public. Notices of hearings and investigations, committee meetings, agency decisions and rulings, delegations of authority, filing of petitions and applications and agency statements of organization and functions are examples of documents appearing in this section.

DEPARTMENT OF AGRICULTURE

Submission for OMB Review; Comment Request

May 1, 1998.

The Department of Agriculture has submitted the following information collection requirement(s) to OMB for review and clearance under the Paperwork Reduction Act of 1995, Public Law 104–13. Comments regarding (a) whether the collection of information is necessary for the proper performance of the functions of the agency, including whether the information will have practical utility; (b) the accuracy of the agency's estimate of burden including the validity of the methodology and assumptions used; (c) ways to enhance the quality, utility and clarity of the information to be collected: (d) ways to minimize the burden of the collection of information on those who are to respond, including through the use of appropriate automated, electronic, mechanical, or other technological collection techniques or other forms of information technology should be addressed to: Desk Officer for Agriculture, Office of Information and Regulatory Affairs, Office of Management and Budget (OMB), Washington, D.C. 20503 *and* to Departmental Clearance Office, USDA, OCIO, Mail Stop 7602, Washington, D.C. 20250–7602. Comments regarding these information collections are best assured of having their full effect if received within 30 days of this notification. Copies of the submission(s) may be obtained by calling (202) 720–6746.

An agency may not conduct or sponsor a collection of information unless the collection of information displays a currently valid OMB control number and the agency informs potential persons who are to respond to the collection of information that such persons are not required to respond to the collection of information unless it displays a currently valid OMB control number.

Economic Research Service

Title: USDA County Based Project Customer Survey.

OMB Control Number: 0536–NEW.

Summary of Collection: The Economic Research Service is managing, on behalf of the Secretary of Agriculture, a study of county-based agency operations. The goal of the project is the articulation of alternative approaches to organizing and staffing USDA's county-based operations in delivering services that are clearly linked to the Federal policy and program priorities and that can be transparently managed to meet Federal budget targets. During the study, consultants under contract with ERS will visit ten selected county office sites around the county. The consultant also plans to conduct a telephone survey of USDA customers associated with each site to gather a better understanding of customer interaction with the offices' business processes.

Need and Use of the Information: ERS, through its contract consultant, plans to conduct approximately 335 telephone interviews to gather information on customer interactions and experiences, and perceptions of service. The survey will be conducted one time only. The data collected from the survey will be used primarily by the project team as input to the workload measurement and business process modeling activities.

Description of Respondents: Farms; Individuals or households.

Number of Respondents: 770.

Frequency of Responses: Reporting: Other (one time collection).

Total Burden Hours: 254.

Food and Consumer Service

Title: The Integrity Profile.

OMB Control Number: 0584–0401.

Summary of Collection: The Food and Nutrition Service (FNS) administers the Woman, Infant, and Childrens (WIC) Program on behalf of the Secretary of Agriculture. In recent years, the Office of Inspector General (OIG), has performed audits of FNS' vendor management and recommended FNS (1) develop criteria to identify vendors suspected of abuse (high-risk vendors) and (2) require State agencies to perform a minimum number of compliance investigations in order to provide sufficient evidence on whether vendors are overcharging the Program or violating other regulatory requirements. Accordingly, FNS requires State agencies to report annually on their vendor monitoring efforts. The data collected from the States serves as a management tool to provide Congress, OIG senior program managers, as well as the general public, assurances that program funds are being spent appropriately and that every reasonable effort is being made to prevent, detect and eliminate fraud, waste and abuse.

Need and Use of the Information: The information collected is analyzed and a report is prepared by FNS annually that (1) assesses State agency progress in eliminating abusive vendors, (2) assesses the level of activity that is being directed to ensuring program integrity, and (3) analyzes trends over a 5-year period. The information is used at the national level in formulating program policy and regulations. At the FNS regional office level, the data is reviewed to identify possible vendor management deficiencies so that technical assistance can be provided to States, as needed. At the State level, the information is used to provide assurances to the Governor's office, and other interested parties, that WIC issues are being addressed.

Description of Respondents: State, Local or Tribal Government.

Number of Respondents: 88.

Frequency of Responses: Reporting: Annually.

Total Burden Hours: 1,836.

Agricultural Marketing Service

Title: Cotton Classing, Testing, and Standards.

OMB Control Number: 0581–0008.

Summary of Collection: The U.S. Cotton Standards Act, 7 U.S.C. 51, 53 and 55, directs and authorizes the USDA to supervise the various activities directly associated with the classification or grading of cotton, cotton linters, and cottonseed based on official USDA Standards. The Cotton Division of the Agricultural Marketing Service carries out this supervision and is responsible for the maintenance of the functions to which these forms relate.

Need and Use of the Information: The Agricultural Marketing Service uses the following forms to collection information: Form CN–357 is submitted by owners of cotton to request cotton classification services. The request

contains information for USDA to ascertain proper ownership of the samples submitted, distribute classification results, and bill for services. Information about the origin and handling of the cotton is necessary in order to properly evaluate and classify the samples.

Form CN–246 is submitted by cotton gins and warehouses seeking to serve as licensed samplers. The license period is five years. Licenses issued by the USDA–AMS Cotton Division authorize the warehouse/gin to draw and submit samples to insure the proper application of standards in the classification of cotton and to prevent deception in their use.

Form CN–383 is submitted to cotton producers, ginners, warehousemen, cooperatives, manufacturers, merchants, and crushers interested in acquiring a set of cotton grade and staple standards for Upland and Pima cotton.

Description of Respondents: Business or other for-profit; Individuals or households.

Number of Respondents: 307.

Frequency of Responses: Reporting: Annually; Other (every 5 yrs).

Total Burden Hours: 100.

Farm Service Agency

Title: Standards for Approval of Warehouses-7 CFR 1421, 1423 and 1427

OMB Control Number: 0560–0052

Summary of Collection: The Farm Service Agency (FSA), under Public Law 80–806, the Commodity Credit Corporation (CCC) Charter Act, is authorized to enter into storage contracts with commercial warehouse operators. Specifically, the Act permits FSA to enter into various types of contracts as are necessary in the conduct of its business and directs FSA to utilize the usual and customary channels, facilities and arrangements of trade and commerce in its functions of purchasing, warehousing, transporting, processing, or handling of agricultural commodities. FSA must collect information in order to develop and maintain a List of Approved Warehouses (Approved List) to store CCC-owned or loan commodities. The use of warehouses on the Approved List reduces the risk of loss faced by CCC by using only those facilities which meet the financial, physical, and managerial requirements of CCC. The information will be collected by mail which is necessary because these agreements must be legal and binding.

Need and Use of the Information: The information collected on various forms is necessary to establish and maintain the Approved List, follow accepted warehousing practices, and represent the minimum burden to carry out various mandatory price support programs. The forms will be reviewed by FSA contracting officers at the Kansas City Commodity Office (KCCO) in order to maintain an Approved List for the storage of CCC-owned or CCC-loan commodities.

Description of Respondents: Business or other for-profit.

Number of Respondents: 3,380.

Frequency of Responses: Recordkeeping; Reporting: On occasion; Annually.

Total Burden Hours: 423,864.

Farm Service Agency

Title: End-Use Certificate Program—7 CFR Part 782.

OMB Control Number: 0560–0151.

Summary of Collection: Public Law 103–182, Section 321 (f) of the North American Free Trade Agreement Implementation Act mandates that the Secretary of Agriculture shall implement, in coordination with the Commissioner of Customs, a program requiring that end-use certificates be included in the documentation covering the entry into the United States of any wheat originating from Canada.

Need and Use of the Information: The end-use certificate program was designed to ensure that Canadian wheat does not benefit from USDA or CCC-assisted export programs. The information collected on the end-use certificate is used in conjunction with USDA's domestic origin compliance review process doing quarterly audits of contractors involved in foreign food assistance programs. The form FSA–750 ''End-Use Certificate for Wheat'' is used by approximately 200 importers of Canadian wheat to report entry into the United States. The FSA–751 ''Wheat Consumption and Resale Report'' is used by approximately 225 millers, exporters, and other users of Canadian wheat to report final disposition of Canadian wheat in the United States.

Description of Respondents: Business or other for-profit.

Number of Respondents: 430.

Frequency of Responses: Reporting: On occasion; Quarterly.

Total Burden Hours: 5,971.

Nancy Sternberg,

Departmental Information Clearance Officer.

[FR Doc. 98–12141 Filed 5–6–98; 8:45 am]

BILLING CODE 3410–01–M

DEPARTMENT OF AGRICULTURE

Animal and Plant Health Inspection Service

[Docket No. 97–130–2]

AgrEvo USA Co.; Availability of Determination of Nonregulated Status for Sugar Beet Genetically Engineered for Glufosinate Herbicide Tolerance

AGENCY: Animal and Plant Health Inspection Service, USDA.

ACTION: Notice.

SUMMARY: We are advising the public of our determination that AgrEvo USA Company's sugar beet designated as Transformation Event T120–7, which has been genetically engineered for tolerance to the herbicide glufosinate, is no longer considered a regulated article under our regulations governing the introduction of certain genetically engineered organisms. Our determination is based on our evaluation of data submitted by AgrEvo USA Company in its petition for a determination of nonregulated status and an analysis of other scientific data. This notice also announces the availability of our written determination document and its associated environmental assessment and finding of no significant impact.

EFFECTIVE DATE: April 28, 1998.

ADDRESSES: The determination, an environmental assessment and finding of no significant impact, and the petition may be inspected at USDA, room 1141, South Building, 14th Street and Independence Avenue SW., Washington, DC, between 8 a.m. and 4:30 p.m., Monday through Friday, except holidays. Persons wishing to inspect those documents are asked to call in advance of visiting at (202) 690–2817 to facilitate entry into the reading room.

FOR FURTHER INFORMATION CONTACT: Dr. Ved Malik, Biotechnology and Biological Analysis, PPQ, APHIS, 4700 River Road Unit 147, Riverdale, MD 20737–1236; (301) 734–6774. To obtain a copy of the determination or the environmental assessment and finding of no significant impact, contact Ms. Kay Peterson at (301) 734–4885; e-mail: mkpeterson@aphis.usda.gov.

SUPPLEMENTARY INFORMATION:

Background

On December 2, 1997, the Animal and Plant Health Inspection Service (APHIS) received a petition (APHIS Petition No. 97–336–01p) from AgrEvo USA Company (AgrEvo) of Wilmington, DE, seeking a determination that sugar beet

(*Beta vulgaris* L.) designated as Transformation Event T120–7 (event T120–7), which has been genetically engineered for tolerance to the herbicide glufosinate, does not present a plant pest risk and, therefore, is not a regulated article under APHIS' regulations in 7 CFR part 340.

On February 6, 1998, APHIS published a notice in the **Federal Register** (63 FR 6148–6149, Docket No. 97–130–1) announcing that the AgrEvo petition had been received and was available for public review. The notice also discussed the role of APHIS, the Environmental Protection Agency, and the Food and Drug Administration in regulating the subject sugar beet and food products derived from it. In the notice, APHIS solicited written comments from the public as to whether this sugar beet posed a plant pest risk. The comments were to have been received by APHIS on or before April 7, 1998. APHIS received no comments on the subject petition during the designated 60-day comment period.

Analysis

Event T120–7 sugar beet has been genetically engineered to contain a synthetic version of the *pat* gene derived from *Streptomyces viridochromogenes.* The *pat* gene encodes the enzyme phosphinothricin-N-acetyltransferase (PAT), which confers tolerance to the herbicide glufosinate. Expression of the *pat* gene is controlled by 35S promoter and terminator sequences derived from the plant pathogen cauliflower mosaic virus. Event T120–7 sugar beet also contains the *aph(3')II* or *nptII* marker gene used in plant transformation.

Expression of the *nptII* gene is controlled by gene sequences derived from *Agrobacterium tumefaciens,* and analysis indicates that the NPTII protein is expressed in certain parts of the subject sugar beet plants. The *A. tumefaciens* method was used to transfer the added genes into the parental sugar beet line.

The subject sugar beet has been considered a regulated article under APHIS' regulations in 7 CFR part 340 because it contains gene sequences derived from plant pathogens. However, evaluation of field data reports from field tests of this sugar beet conducted under APHIS permits since 1994 indicates that there were no deleterious effects on plants, nontarget organisms, or the environment as a result of the environmental release of event T120–7 sugar beet.

Determination

Based on its analysis of the data submitted by AgrEvo, and a review of other scientific data and field tests of the subject sugar beet, APHIS has determined that event T120–7: (1) Exhibits no plant pathogenic properties; (2) is no more likely to become a weed than sugar beet developed by traditional breeding techniques; (3) is unlikely to increase the weediness potential for any other cultivated or wild species with which it can interbreed; (4) will not cause damage to raw or processed agricultural commodities; and (5) will not harm threatened or endangered species or other organisms, such as bees, that are beneficial to agriculture. Therefore, APHIS has concluded that the subject sugar beet and any progeny derived from crosses with other sugar beet varieties will be as safe to grow as sugar beet in traditional breeding programs that are not subject to regulation under 7 CFR part 340.

The effect of this determination is that AgrEvo's event T120–7 sugar beet is no longer considered a regulated article under APHIS' regulations in 7 CFR part 340. Therefore, the requirements pertaining to regulated articles under those regulations no longer apply to the subject sugar beet or its progeny. However, importation of event T120–7 sugar beet or seeds capable of propagation are still subject to the restrictions found in APHIS' foreign quarantine notices in 7 CFR part 319.

National Environmental Policy Act

An environmental assessment (EA) has been prepared to examine the potential environmental impacts associated with this determination. The EA was prepared in accordance with: (1) The National Environmental Policy Act of 1969 (NEPA), as amended (42 U.S.C. 4321 *et seq.*), (2) regulations of the Council on Environmental Quality for implementing the procedural provisions of NEPA (40 CFR parts 1500–1508), (3) USDA regulations implementing NEPA (7 CFR part 1b), and (4) APHIS' NEPA Implementing Procedures (7 CFR part 372). Based on that EA, APHIS has reached a finding of no significant impact (FONSI) with regard to its determination that AgrEvo's event T120–7 sugar beet and lines developed from it are no longer regulated articles under its regulations in 7 CFR part 340. Copies of the EA and the FONSI are available upon request from the individual listed under **FOR FURTHER INFORMATION CONTACT.**

Done in Washington, DC, this 30th day of April, 1998.

Craig A. Reed,

Acting Administrator, Animal and Plant Health Inspection Service.

[FR Doc. 98–12125 Filed 5–6–98; 8:45 am]

BILLING CODE 3410–34–P

DEPARTMENT OF AGRICULTURE

Animal and Plant Health Inspection Service

[Docket No. 98–032–1]

AgrEvo USA Co.; Extension of Determination of Nonregulated Status to Soybean Genetically Engineered for Glufosinate Herbicide Tolerance

AGENCY: Animal and Plant Health Inspection Service, USDA.

ACTION: Notice.

SUMMARY: We are advising the public of our decision to extend to one additional soybean line our determination that certain soybean lines developed by AgrEvo USA Company, which have been genetically engineered for glufosinate herbicide tolerance, are no longer considered regulated articles under our regulations governing the introduction of certain genetically engineered organisms. Our decision is based on our evaluation of data submitted by AgrEvo USA Company in its request for an extension of a determination of nonregulated status and an analysis of other scientific data. This notice also announces the availability of an environmental assessment and finding of no significant impact.

EFFECTIVE DATE: June 8, 1998.

ADDRESSES: The extension request and an environmental assessment and finding of no significant impact may be inspected at USDA, room 1141, South Building, 14th Street and Independence Avenue SW., Washington, DC, between 8 a.m. and 4:30 p.m., Monday through Friday, except holidays. Persons wishing to inspect those documents are asked to call in advance of visiting at (202) 690–2817.

FOR FURTHER INFORMATION CONTACT: Dr. Sivramiah Shantharam, Biotechnology and Biological Analysis, PPQ, APHIS, 4700 River Road Unit 147, Riverdale, MD 20737–1236; (301) 734–4882. To obtain a copy of the extension request or the environmental assessment and finding of no significant impact, contact Ms. Kay Peterson at (301) 734–4885; e-mail: mkpeterson@aphis.usda.gov.

SUPPLEMENTARY INFORMATION: The regulations in 7 CFR part 340, ''Introduction of Organisms and Products Altered or Produced Through Genetic Engineering Which Are Plant Pests or Which There is Reason to Believe Are Plant Pests,'' regulate, among other things, the introduction (importation, interstate movement, or release into the environment) of organisms and products altered or

produced through genetic engineering that are plant pests or that there is reason to believe are plant pests. Such genetically engineered organisms and products are considered ''regulated articles.''

The regulations in § 340.6(a) provide that any person may submit a petition to the Animal and Plant Health Inspection Service (APHIS) seeking a determination that an article should not be regulated under 7 CFR part 340. Further, the regulations in § 340.6(e)(2) provide that a person may request that APHIS extend a determination of nonregulated status to other organisms. Such a request shall include information to establish the similarity of the antecedent organism and the regulated article in question.

Background

On January 14, 1998, APHIS received a request for an extension of a determination of nonregulated status (APHIS No. 98–014–01p) from AgrEvo USA Company (AgrEvo) of Wilmington, DE, for a soybean line designated as transformation event A5547–127 (event A5547–127), which has been genetically engineered for resistance, or tolerance, to the herbicide glufosinate. The AgrEvo request seeks an extension of a determination of nonregulated status that was issued for certain lines of glufosinate tolerant soybean (antecedent organisms) in response to APHIS petition number 96–068–01p (61 FR 42581–42582, August 16, 1996, Docket No. 96–019–2). Based on the similarity of event A5547–127 to the antecedent organisms, AgrEvo requests a determination that glufosinate tolerant soybean event A5547–127 does not present a plant pest risk and, therefore, is not a regulated article under APHIS' regulations in 7 CFR part 340.

Analysis

Event A5547–127 soybean contains a synthetic version of the *pat* gene derived from Streptomyces viridochromogenes, which encodes the PAT enzyme and confers tolerance to glufosinate. Expression of the synthetic *pat* gene is controlled by a 35S promoter and terminator derived from the plant pathogen cauliflower mosaic virus. While the subject soybean event contains fragments of the *bla* marker gene, tests indicate this gene is not expressed in the plant. The particle acceleration method was used to transfer the added genes into the parental *Glycine max* A5547 cultivar. Event A5547–127 soybean was transformed with the same plasmid vector and in the same manner as certain antecedent organisms described in APHIS petition number 96–068–01p, and differs from them only in the copy number and extent of integrated DNA.

The subject soybean line has been considered a regulated article under APHIS' regulations in 7 CFR part 340 because it contains gene sequences derived from a plant pathogen. However, evaluation of field data reports from field tests of this soybean conducted under APHIS notifications since 1996 indicates that there were no deleterious effects on plants, nontarget organisms, or the environment as a result of its environmental release.

Determination

Based on an analysis of the data submitted by AgrEvo and a review of other scientific data and field tests of the subject soybean line, APHIS has determined that event A5547–127 soybean: (1) Exhibits no plant pathogenic properties; (2) is no more likely to become a weed than soybean lines developed by traditional breeding techniques; (3) is unlikely to increase the weediness potential for any other cultivated or wild species with which it can interbreed; (4) will not cause damage to raw or processed agricultural commodities; and (5) will not harm threatened or endangered species or other organisms, such as bees, that are beneficial to agriculture. Therefore, APHIS has concluded that the subject soybean line and any progeny derived from crosses with other soybean varieties will be as safe to grow as soybeans in traditional breeding programs that are not subject to regulation under 7 CFR part 340.

The effect of this determination is that AgrEvo's event A5547–127 soybean is no longer considered a regulated article under APHIS' regulations in 7 CFR part 340. Therefore, the requirements pertaining to regulated articles under those regulations no longer apply to the field testing, importation, or interstate movement of the subject soybean line or its progeny. However, importation of the subject soybean line or seeds capable of propagation are still subject to the restrictions found in APHIS' foreign quarantine notices in 7 CFR part 319.

National Environmental Policy Act

An environmental assessment (EA) has been prepared to examine the potential environmental impacts associated with this determination. The EA was prepared in accordance with: (1) The National Environmental Policy Act of 1969, as amended (NEPA) (42 U.S.C. 4321 *et seq.*), (2) regulations of the Council on Environmental Quality for implementing the procedural provisions of NEPA (40 CFR parts 1500–1508), (3) USDA regulations implementing NEPA (7 CFR part 1b), and (4) APHIS' NEPA Implementing Procedures (7 CFR part 372). Based on that EA, APHIS has reached a finding of no significant impact (FONSI) with regard to its determination that AgrEvo's event A5547–127 soybean and lines developed from it are no longer regulated articles under its regulations in 7 CFR part 340. Copies of the EA and the FONSI are available upon request from the individual listed under **FOR FURTHER INFORMATION CONTACT.**

Done in Washington, DC, this 1st day of May 1998.

Craig A. Reed,

Acting Administrator, Animal and Plant Health Inspection Service.

[FR Doc. 98–12126 Filed 5–6–98; 8:45 am]

BILLING CODE 3410–34–P

DEPARTMENT OF AGRICULTURE

Forest Service

Anchor Hill Project, Gilt Edge Mine, Environmental Impact Statement Supplement, Black Hills National Forest, SD

AGENCY: Forest Service, USDA.

ACTION: Notice of intent to prepare a draft supplement to a final environmental impact statement.

SUMMARY: J. Thomas Millard, Spearfish/Nemo District Ranger, of the Black Hills National Forest gives notice of the agency's intent to prepare a Draft Supplement to the Final Environmental Impact Statement for the Anchor Hill Project of the Gilt Edge Mine. The responsible official for this project is John C. Twiss, Forest Supervisor, Black Hills National Forest.

DATES: The Draft Supplement should be available for public comment by the end of April 1998. The Final Supplement should be ready for public review in July of 1998.

ADDRESSES: Send written comments to District Ranger, Spearfish/Nemo District, P.O. Box 407, Deadwood, SD 57732.

FOR FURTHER INFORMATION CONTACT: Don Murray Lands and Minerals Staff on the Spearfish/Nemo Ranger District, (605) 578–2744.

SUPPLEMENTARY INFORMATION: The Draft Supplement will provide additional information and clarification of items in the Final Environmental Impact Statement for the Anchor Hill Project published in November 1997. The Anchor Hill Project is the proposed expansion of an existing open pit gold

mine on to 37 acres of land in the Black Hills National Forest, which is located four miles southeast of Deadwood, South Dakota.

The comment period on the draft supplement to the final environmental impact statement will be a minimum of 45 days from the date the Environmental Protection Agency publishes the notice of availability in the **Federal Register**.

The Forest Service believes, at this early stage, it is important to give reviewers notice of several court rulings related to public participation in the environmental review process. First, reviewers of draft supplements to the final environmental impact statements must structure their participation in the environmental review of the proposal so that it is meaningful and alerts an agency to the reviewer's position and contentions. *Vermont Yankee Nuclear Power Corp.* v. *NRDC,* 435 U.S. 519, 553 (1978). Also, environmental objections that could be raised at the draft supplement to the final environmental impact statement stage but that are not raised until after completion of the final supplement to the final environmental impact statement may be waived or dismissed by the courts. *City of Angoon* v. *Hodel,* 803 F.2d 1016, 1022 (9th Cir. 1986) and *Wisconsin Heritages, Inc.* v. *Harris,* 490 F. Supp. 1334, 1338 (E.D. Wis. 1980). Because of these court rulings, it is very important that those interested in this proposed action participate by the close of the 45 day comment period so that substantive comments and objectives are made available to the Forest Service at a time when it can meaningfully consider them and respond to them in the final environmental impact statement.

To assist the Forest Service in identifying and considering issues and concerns on the proposed action, comments on the draft supplement to the final environmental impact statement should be as specific as possible. It is also helpful if comments refer to specific pages or chapters of the draft supplement. Comments may also address the adequacy of the draft supplement to the final environmental impact statement or the merits of the alternatives formulated and discussed in the statement. Reviewers may wish to refer to the Council on Environmental Quality Regulations for implementing the procedural provisions of the National Environmental Policy Act at 40 CFR 1503.3 in addressing these points.

Dated: April 3, 1998.

J. Thomas Millard,

District Ranger.

[FR Doc. 98–12089 Filed 5–6–98; 8:45 am]

BILLING CODE 3410–11–M

DEPARTMENT OF AGRICULTURE

Forest Service

Rocky Mountain Region; Telluride Ski Area Expansion—Supplemental Analysis, Grand Mesa, Uncompahgre and Gunnison National Forests, San Miguel County, CO

AGENCY: Forest Service, USDA.

ACTION: Notice of intent to prepare a Supplemental Environmental Impact Statement.

SUMMARY: The U.S. Department of Agriculture, Forest Service will prepare a Supplemental Environmental Impact Statement (SFEIS) to the Final Environmental Impact Statement Telluride Ski Area Expansion (FEIS) to address the adequacy of the FEIS and to disclose new information. The Final Record of Decision (ROD) on the Telluride Ski Area Expansion released in July 1996 was subsequently withdrawn pending further analysis required by the Appeal Deciding Officer and a civil complaint. The SFEIS will address the points raised by the Appeal Deciding Officer and the civil complaint as well as any applicable new information. The FEIS disclosed potential impacts on a proposal to develop six new ski lifts with associated runs and five new restaurants at the Telluride Ski Area on the Norwood District of the Grand Mesa, Uncompahgre and Gunnison National Forests within San Miguel County, Colorado.

DATES: The draft SFEIS is scheduled for publication in June 1998 and the final in September 1998.

ADDRESSES: Send written comments to Dick Cook, Norwood Ranger District, Grand Mesa, Uncompahgre and Gunnison National Forests, P.O. Box 388, Norwood, Colorado 81423. Robert L. Storch, Forest Supervisor, Grand Mesa, Uncompahgre and Gunnison National Forests, is the Responsible Official for this EIS.

FOR FURTHER INFORMATION CONTACT: Arthur Bauer, Project Coordinator, Norwood Ranger District—(970) 728–9351 or (970) 327–4261.

SUPPLEMENTARY INFORMATION: The EIS process for the Telluride Ski Area Expansion began with a Notice of Intent in the **Federal Register** on June 18, 1993. The proposal includes the construction of six new lifts and associated trails, five new restaurants, and the expansion of additional off-season recreational activities. A draft EIS was published in March 1994 and a supplement to the draft EIS was published in December 1994. The FEIS for the Telluride Ski Area Expansion was prepared and released in February 1996 and the ROD was released in July 1996.

The ROD was the subject of an appeal to the Rocky Mountain Regional Forester on September 6, 1996. The ruling made on October 22, 1996 by the Appeal Deciding Officer directed the Forest Supervisor to: (1) Disclose the socio-economic impacts, including community infrastructure and services, to communities outside of San Miguel County but within the employee commuting area of Telluride; (2) specify the required best management practices for erosion and sedimentation control; (3) disclose the instream flows of the San Miguel River resulting from the proposed action with the existing flows, the associated effects including cumulative effects of water depletions, and specify required mitigation; and (4) analyze and disclose the environmental effects of off-season operation and use of any chairlift, other than Lift #10.

Subsequent to the ruling by the Appeal Deciding Officer, a civil complaint was filed against the USFS in March 1997 and was subsequently amended on April 22, 1997. The claims made by the plaintiffs included four counts which dealt with potential inadequacies in the FEIS, the exclusion of two transportation exhibits in the Appeal Record, concerns that potential bias in the analysis may have tainted the process, and the possible violation of the Clean Air Act by the issuance of the conformity Determination.

On June 30, 1997, the Forest Supervisor of the GMUG National Forests withdrew the decision on the Telluride Ski Area expansion pending further analysis required by the Appeal Deciding Officer and the points raised in the civil complaint. The ROD released in July 1996 is no longer considered valid. Once the Supplement has been finalized, a new decision will be issued by the Forest Supervisor. The new decision will consider all the findings of the Supplement as well as those released in the FEIS. All elements and alternatives displayed in the FEIS will be reconsidered in the Record of Decision associated with the supplement.

The Deciding Official will be Robert L. Storch, Forest Supervisor, Grand Mesa, Uncompahgre and Gunnison

National Forests, 2250 Highway 50, Delta, Colorado 81416.

Dated: April 27, 1998.

Robert L. Storch,

Forest Supervisor.

[FR Doc. 98–12161 Filed 5–6–98; 8:45 am]

BILLING CODE 3410–11–M

DEPARTMENT OF AGRICULTURE

Forest Service

Southwest Washington Provincial Advisory Committee Meeting Notice

AGENCY: Forest Service, USDA.

ACTION: Notice of meeting.

SUMMARY: The Southwest Washington Provincial Advisory Committee will meet on Friday, May 15, 1998, in Woodland, Washington, at the Oak Tree Restaurant (1020 Atlantic Street). The meeting will begin at 8 a.m. and continue until 3 p.m. The purpose of the meeting is to: (1) Provide information on Forest Implementation and Effectiveness Monitoring, (2) Relate the status of National Forest land exchanges, (3) Provide information about the Recreation Fee Program, and (4) Public Open Forum. All Southwest Washington Provincial Advisory Committee meetings are open to the public. Interested citizens are encouraged to attend. The ''open forum'' provides opportunity for the public to bring issues, concerns, and discussion topics to the Advisory Committee. The ''open forum'' is scheduled as part of agenda item (4) of this meeting. Interested speakers will need to register prior to the open forum period. The committee welcomes the public's written comments on committee business at any time.

FOR FURTHER INFORMATION CONTACT: Direct questions regarding this meeting to Linda Turner, Public Affairs Specialist, at (360) 891–5195, or write Forest Headquarters Office, Gifford Pinchot National Forest, 10600 N.E. 51st Circle, Vancouver, WA 98682.

Dated: April 30, 1998.

Ted C. Stubblefield,

Forest Supervisor.

[FR Doc. 98–12061 Filed 5–6–98; 8:45 am]

BILLING CODE 3410–11–M

COMMISSION ON CIVIL RIGHTS

Agenda and Notice of Public Meeting of the Illinois Advisory Committee

Notice is hereby given, pursuant to the provisions of the rules and regulations of the U.S. Commission on Civil Rights, that a meeting of the Illinois Advisory Committee to the Commission will convene at 9:00 a.m. and adjourn at 6:00 p.m. on May 29, 1998, at the Ralph Metcalfe Federal Building, 77 West Jackson Boulevard, Room 331, Chicago, Illinois 60604. The purpose of the meeting is to hold a conference on ''Civil Rights Issues Facing the Blind in Illinois.''

Persons desiring additional information, or planning a presentation to the Committee, should contact Committee Chairperson Joseph Mathewson, 312–360–1110, or Constance M. Davis, Director of the Midwestern Regional Office, 312–353–8311 (TDD 312–353–8362). Hearing-impaired persons who will attend the meeting and require the services of a sign language interpreter should contact the Regional Office at least ten (10) working days before the scheduled date of the meeting.

The meeting will be conducted pursuant to the provisions of the rules and regulations of the Commission.

Dated at Washington, DC, April 29, 1998.

Carol-Lee Hurley,

Chief, Regional Programs Coordination Unit.

[FR Doc. 98–12156 Filed 5–6–98; 8:45 am]

BILLING CODE 6335–01–P

DEPARTMENT OF COMMERCE

Submission for OMB Review; Comment Request

DOC has submitted to the Office of Management and Budget (OMB) for clearance the following proposal for collection of information under the provisions of the Paperwork Reduction Act of 1995, Public Law 104–13.

Bureau: International Trade Administration (ITA).

Title: NATO International Competitive Bidding (ICB) Bidders List Application .

Agency Form Number: ITA 4023P.

OMB Number: 0625–0055.

Type of Request: Regular Submission.

Burden: 60 hours.

Number of Respondents: 60.

Avg. Hours Per Response: 1 hour.

Needs and Uses: Opportunities for contracts under NATO Security Investment Program (NSIP) are only open to firms of member NATO countries. NSIP procedures for international competitive bidding (AC/4–D/2261) require that each NATO country certify that their respective firms are eligible to bid such contracts. This is done through the issuance of a ''Declaration of Eligibility''. The U.S. Department of Commerce/ITA is the executive agency responsible for certifying U.S. firms. ITA–4023P is the application form used by USDOC/ITA to collect information needed to ascertain the eligibility of a US firm. ITA reviews the application for completeness and accuracy and determines a company's eligibility based on its financial viability, technical capability, and security clearances with the Department of Defense.

Affected Public: Businesses or other for-profit, not-for-profit institutions.

Frequency: On Occasion.

Respondent's Obligation: Required to obtain or retain a benefit, voluntary.

OMB Desk Officer: Dennis Marvich, (202) 395–5871.

Copies of the above information collection proposal can be obtained by calling or writing Linda Engelmeier, Departmental Forms Clearance Officer, (202) 482–3272, Department of Commerce, Room 5327, 14th and Constitution, N.W., Washington, DC 20230.

Written comments and recommendations for the proposed information collection should be sent within 30 days of publication of this notice to Dennis Marvich, OBM Desk Officer, Room 10202, New Executive Office Building, Washington, DC 20503.

Dated: April 30, 1998.

Linda Engelmeier,

Departmental Forms Clearance Officer, Office of Management and Organization.

[FR Doc. 98–12087 Filed 5–6–98; 8:45 am]

BILLING CODE 3510–DR–U

DEPARTMENT OF COMMERCE

Bureau of the Census

[Docket No. 980427107–8107–01]

Designation of an Urbanized Area for Flagstaff, AZ

AGENCY: Bureau of the Census, Commerce.

ACTION: Notice of designation.

SUMMARY: Based on the results of a special census conducted April 1, 1995, the Bureau of the Census designated Flagstaff, Arizona, as an urbanized area under criteria published October 22, 1990 in the **Federal Register** (55 FR 42592–42596, Oct. 22, 1990). The Flagstaff, Arizona, urbanized area has a population of 53,355.

FOR FURTHER INFORMATION CONTACT: Dr. Joel L. Morrison, Chief, Geography Division, Bureau of the Census, Washington, DC 20233–7400, telephone (301) 457–1132.

SUPPLEMENTARY INFORMATION: Based on the results of a special census conducted April 1, 1995, the Bureau of the Census designated Flagstaff, Arizona, as an urbanized area effective March 13, 1996. The major geographic components of the urbanized area and the population and land area of each appear below:

Urbanized area	Population	Land area	
		Sq. miles	Sq. kilometers
Flagstaff, AZ	53,355	26.23	67.94
In Central Place	52,507	25.60	66.32
Flagstaff City (pt.), AZ	52,507	25.60	66.32
Urban Fringe	848	0.63	1.62
Coconino County (pt.)	848	0.63	1.62
Coconino Division (pt.)	848	0.63	1.62

Since 1986, the Census Bureau has allowed the delineation of new urbanized areas based on a special census taken in the intercensal period. The Census Bureau delineates urbanized areas every 10 years as part of the decennial census of population and housing or following a special census.

Dated: April 27, 1998.

James F. Holmes,

Acting Director, Bureau of the Census.

[FR Doc. 98–12132 Filed 5–6–98; 8:45 am]

BILLING CODE 3510–07–P

DEPARTMENT OF COMMERCE

Bureau of Export Administration

Action Affecting Export Privileges; Export Materials, Inc. and Thane-Coat International, Ltd.; Decision and Order on Renewal of Temporary Denial Order

In the matters of: Export Materials, Inc., 3727 Greenbrier Drive, No. 108, Stafford, Texas 77477, and Thane-Coat International, Ltd., Suite C, Regent Centre, Explorers Way, P.O. Box F–40775, Freeport, The Bahamas, Respondents.

On October 31, 1997, Acting Assistant Secretary for Export Enforcement Frank W. Deliberti issued a Decision and Order on Renewal of Temporary Denial Order (hereinafter ''Order'' or ''TDO''), renewing for 180 days a May 5, 1997 Order naming Thane-Coat, Inc.; Jerry Vernon Ford, president, Thane-Coat, Inc.; Preston John Engebretson, vice-president, Thane-Coat, Inc.; Export Materials, Inc.; and Thane-Coat International, Ltd. (Export Materials, Inc. And Thane-Coat, International, Ltd. hereinafter collectively referred to as the ''Respondents'' and Thane-Coat, Inc., Ford, and Engebretson, the ''affiliated parties''), as persons temporarily denied all U.S. export privileges. 62 FR 60063–60065 (November 6, 1997). The Order will expire on April 29, 1998.

On April 9, 1998, pursuant to Section 766.24 of the Export Administration Regulations (15 C.F.R. Parts 730–774 (1997)) (hereinafter the ''Regulations''), issued pursuant to the Export Administration Act of 1979, as amended (50 U.S.C.A. app. sections 2401–2420 (1991 & Supp. 1998)) (hereinafter the ''Act''),[1] the Office of Export Enforcement, Bureau of Export Administration, United States Department of Commerce (hereinafter ''BXA''), requested that the Assistant Secretary for Export Enforcement renew the Order against Thane-Coat International, Inc. and Export Materials, Inc. for an additional 180 days.

In its request, BXA stated that, as a result of an ongoing investigation, it had reason to believe that, during the period from approximately June 1994 through approximately July 1996, Thane-Coat, Inc., through Ford and Engebretson, and using its affiliated companies, Thane-Coat International, Ltd. and Export Materials, Inc., made approximately 100 shipments of U.S.-origin pipe coating materials, machines, and parts to the Dong Ah Consortium in Benghazi, Libya. These items were for use in coating the internal surface of prestressed concrete cylinder pipe for the Government of Libya's Great Man-Made River Project.[2] Moreover, BXA's investigation gave it reason to believe that the Respondents and the affiliated parties employed a scheme to export U.S.-origin products from the United States, through the United Kingdom, to Libya, a country subject to a comprehensive economic sanctions program, without the authorizations required under U.S. law, including the Regulations. The approximate value of the 100 shipments at issue was $35 million. In addition, the Respondents and the affiliated parties undertook several significant and affirmative actions in connection with the solicitation of business on another phase of the Great Man-Made River Project.

BXA has stated that it believes that the matters under investigation and the information obtained to date in that investigation support renewal of the TDO issued against the Respondents.[3] BXA believes that a temporary denial order is necessary to give notice to companies in the United States and abroad that they should cease dealing with Thane-Coat International, Inc. and Export Materials, Inc. in export-related transactions involving U.S.-origin goods.

Based on BXA's showing, I find that it is appropriate to renew the order temporarily denying all U.S. export privileges of Thane-Coat International, Ltd. and Export Materials, Inc. I find that such renewal is necessary in the public interest to prevent an imminent violation of the Regulations and to give notice to companies in the United States and abroad to cease dealing with these persons in any commodity, software, or technology exported or to be exported from the United States and subject to the Export Administration Regulations, or in any other activity subject to the Regulations. Moreover, I find such renewal is in the public interest in order to reduce the substantial likelihood that Thane-Coat International, Inc. and Export Materials, Inc. will engage in activities which are in violation of the Regulations.

Accordingly, *it is therefore ordered:*

First, that Thane-Coat International, Ltd., and all of its successors or assigns, officers, representatives, agents, and

[1] The Act expired on August 20, 1994. Executive Order 12924 (3 C.F.R., 1994 Comp. 917 (1995)), extended by Presidential Notices of August 15, 1995 (3 C.F.R., 1995 Comp. 501 (1996)), August 14, 1996 (3 C.F.R., 1996 Comp. 298 (1997)), and August 13, 1997 (62 FR 43629, August 15, 1997), continued the Regulations in effect under the International Emergency Economic Powers Act (currently codified at 50 U.S.C.A. 1701–1706 (1991 & Supp. 1998)).

[2] BXA understands that the ultimate goal of this project is to bring fresh water from wells drilled in southeast and southwest Libya through prestressed concrete cylinder pipe to the coastal cities of Libya. This multibillion dollar, multiphase engineering endeavor is being performed by the Dong Ah Construction Company of Seoul, South Korea.

[3] On April 17, 1998, BXA requested that the Assistant Secretary for Export Enforcement renew the October 31, 1997 TDO against Thane-Coat, Inc., Jerry Vernon Ford, and Preston John Engebretson.

employees when acting on its behalf, and Export Materials, Inc., and all of its successors or assigns, officers, representatives, agents, and employees when acting on its behalf (hereinafter referred to collectively as the ''denied persons''), may not directly or indirectly, participate in any way in any transaction involving any commodity, software or technology (hereinafter collectively referred to as ''item'') exported or to be exported from the United States that is subject to the Regulations, or in any other activity subject to the Regulations, including, but not limited to:

A. Applying for, obtaining, or using any license, License Exception, or export control document;

B. Carrying on negotiations concerning, or ordering, buying, receiving, using, selling, delivering, storing, disposing of, forwarding, transporting, financing, or otherwise servicing in any way, any transaction involving any item exported or to be exported from the United States that is subject to the Regulations, or in any other activity subject to the Regulations; or

C. Benefiting in any way from any transaction involving any item exported, or to be exported, from the United States that is subject to the Regulations, or in any other activity subject to the Regulations.

Second, that no person may, directly or indirectly, do any of the following:

A. Export or reexport to or on behalf of any denied person any item subject to the Regulations;

B. Take any action that facilitates the acquisition, or attempted acquisition, by any denied person of the ownership, possession, or control of any item subject to the Regulations that has been or will be exported from the United States, including financing or other support activities related to a transaction whereby any denied person acquires, or attempts to acquire, such ownership, possession or control;

C. Take any action to acquire from, or to facilitate the acquisition or attempted acquisition from any denied person of any item subject to the Regulations that has been exported from the United States;

D. Obtain from any denied person in the United States any item subject to the Regulations with knowledge or reason to know that the item will be, or is intended to be, exported from the United States; or

E. Engage in any transaction to service any item subject to the Regulations that has been or will be exported from the United States and which is owned, possessed or controlled by any denied person, or service any item, of whatever origin, that is owned, possessed or controlled by any denied person if such service involves the use of any item subject to the Regulations that has been or will be exported from the United States. For purposes of this paragraph, servicing means installation, maintenance, repair, modification or testing.

Third, that, after notice and opportunity for comment, as provided in Section 766.23 of the Regulations, any person, firm, corporation, or business organization related to any denied person by affiliation, ownership, control, or position of responsibility in the conduct of trade or related services, may also be made subject to the provisions of this Order.

Fourth, that this Order does not prohibit any export, reexport, or other transaction subject to the Regulations where the only items involved that are subject to the Regulations are the foreign-produced direct product of U.S.-origin technology.

This order, which constitutes final agency action in this matter, is effective immediately and shall remain in effect for 180 days.

A copy of this Order shall be served on each Respondent and this Order shall be published in the **Federal Register.**

Entered this 29th day of April, 1998.

F. Amanda, DeBusk,

Assistant Secretary for Export Enforcement.

Certificate of Service

I hereby certify that, on April 30, 1998, I caused the foregoing Decision and Order on Renewal of Temporary Denial Order to be mailed first-class, postage prepaid to: Export Materials, Inc., 3727 Greenbriar Drive, No. 108, Stafford, Texas 77477.

I hereby certify that on April 30, 1998, I caused the foregoing Decision and Order on renewal of Temporary Denial Order to be mailed registered mail, return receipt requested to: Thane-Coat International, Ltd., Suite C, Regent Centre, Explores Way, P.O. Box F–40775, Freeport, The Bahamas.

Lucinda G. Maruca,

Secretary, Office of the Assistant Secretary for Export Enforcement.

[FR Doc. 98–12188 Filed 5–6–98; 8:45 am]

BILLING CODE 3510–DT–M

DEPARTMENT OF COMMERCE

Bureau of Export Administration

Regulations and Procedures Technical Advisory Committee; Notice of Partially Closed Meeting

A meeting of the Regulations and Procedures Technical Advisory Committee (RPTAC) will be held May 27, 1998, 9:00 a.m., in the Herbert C. Hoover Building, Room 3884, 14th Street between Constitution and Pennsylvania Avenues, NW, Washington, DC. The Committee advises the Office of the Assistant Secretary for Export Administration on implementation of the Export Administration Regulations (EAR) and provides for continuing review to update the EAR as needed.

Agenda

Open Session

1. Opening remarks by the Chairperson.
2. Presentation of papers or comments by the public.
3. Discussion of the National Defense Authorization Act computer control regulation.
4. Discussion of the Wassenaar Arrangement implementation regulation.
5. Discussion on the encryption regulation.
6. Update on the license process review initiative.
7. Discussion on the ''deemed export'' rule.
8. Update on Foreign Trade Statistics Regulations and Export Administration Regulations conforming regulations for export clearance requirements.
9. Reports from RPTAC working groups.

Closed Session

10. Discussion of matter properly classified under Executive Order 12958, dealing with the U.S. export control program and strategic criteria related thereto.

The General Session of the meeting will be open to the public and a limited number of seats will be available. To the extent that time permits, members of the public may present oral statements to the Committee. Written statements may be submitted at any time before or after the meeting. However, to facilitate the distribution of public presentation materials to the Committee members, the Committee suggests that presenters forward the public presentation materials two weeks prior to the meeting date to the following address: Ms. Lee Ann Carpenter, OAS/EA/BXA

MS: 3886C, 15th St. & Pennsylvania Ave., N.W., U.S. Department of Commerce, Washington, D.C. 20230.

The Assistant Secretary for Administration, with the concurrence of the delegate of the General Counsel, formally determined on December 16, 1996, pursuant to Section 10(d) of the Federal Advisory Committee Act, as amended, that the series of meetings or portions of meetings of the Committee and of any Subcommittees thereof, dealing with the classified materials listed in 5 U.S.C. 552b(c)(1) shall be exempt from the provisions relating to public meetings found in section 10(a)(1) and 10(a)(3) of the Federal Advisory Committee Act. The remaining series of meetings or portions thereof will be open to the public.

A copy of the Notice of Determination to close meetings or portions of meetings of the Committee is available for public inspection and copying in the Central Reference and Records Inspection Facility, Room 6020, U.S. Department of Commerce, Washington, D.C. For further information, call Lee Ann Carpenter at (202) 482–2582.

Dated: May 1, 1998.

Lee Ann Carpenter,

Director, Technical Advisory Committee Unit.

[FR Doc. 98–12122 Filed 5–6–98; 8:45 am]

BILLING CODE 3510–33–M

DEPARTMENT OF COMMERCE

International Trade Administration

Export Trade Certificate of Review

AGENCY: International Trade Administration, Commerce.

ACTION: Notice of initiation of process to revoke Export Trade Certificate of Review No. 85–00014.

SUMMARY: The Secretary of Commerce issued an export trade certificate of review to Grays Harbor Exporting Trading Company. Because this certificate holder has failed to file an annual report as required by law, the Department is initiating proceedings to revoke the certificate. This notice summarizes the notification letter sent Grays Harbor Exporting Trading Company.

FOR FURTHER INFORMATION CONTACT: Morton Schnabel, Acting Director, Office of Export Trading Company Affairs, International Trade Administration, (202) 482–5131. This is not a toll-free number.

SUPPLEMENTARY INFORMATION: Title III of the Export Trading Company Act of 1982 (''the Act'') (15 U.S.C. 4011–21) authorizes the Secretary of Commerce to issue export trade certificates of review. The regulations implementing Title III (''the Regulations'') are found at 15 CFR part 325. Pursuant to this authority, a certificate of review was issued on December 20, 1985 to Grays Harbor Exporting Trading Company.

A certificate holder is required by law (section 308 of the Act, 15 U.S.C. 4018) to submit to the Department of Commerce annual reports that update financial and other information relating to business activities covered by its certificate. The annual report is due within 45 days after the anniversary date of the issuance of the certificate of review (§§ 325.14(a) and (b) of the Regulations). Failure to submit a complete annual report may be the basis for revocation. (Sections 325.10(a) and 325.14(c) of the Regulations).

The Department of Commerce sent multiple reminder letters and made several telephone calls to Grays Harbor Exporting Trading Company regarding their failure to submit annual reports as required. The Department has received no written response to any of these letters or telephone calls.

On May 1, 1998 and in accordance with § 325.10(c)(1) of the regulations, a letter was sent by certified mail to notify Grays Harbor Exporting Trading Company that the Department was formally initiating the process to revoke its certificate. The letter stated that this action is being taken because of the certificate holder's failure to file an annual report.

In accordance with § 325.10(c)(2) of the regulations, each certificate holder has 30 days from the day after its receipt of the notification letter in which to respond. The certificate holder is deemed to have received this letter as of the date on which this notice is published in the **Federal Register**. For good cause shown, the Department of Commerce can, at its discretion, grant a 30-day extension for a response.

If the certificate holder decides to respond, it must specifically address the Department's statement in the notification letter that it has failed to file an annual report. It should state in detail why the facts, conduct, or circumstances described in the notification letter are not true, or if they are, why they do not warrant revoking the certificate.

If the certificate holder does not respond within the specified period, it will be considered an admission of the statements contained in the notification letter (§ 325.10(c)(2) of the regulations).

If the answer demonstrates that the material facts are in dispute, the Department of Commerce and the Department of Justice shall, upon request, meet informally with the certificate holder. Either Department may require the certificate holder to provide the documents or information that are necessary to support its contentions (§ 325.10(c)(3) of the regulations).

The Department shall publish a notice in the **Federal Register** of the revocation or modification or a decision not to revoke or modify (§ 325.10(c)(4) of the regulations). If there is a determination to revoke a certificate, any person aggrieved by such final decision may appeal to an appropriate U.S. district court within 30 days from the date on which the Department's final determination is published in the **Federal Register** §§ 325.10(c)(4) and 325.11 of the regulations).

Dated: May 1, 1998.

Morton Schnabel,

Acting Director, Office of Export Trading Company Affairs.

[FR Doc. 98–12082 Filed 5–6–98; 8:45 am]

BILLING CODE 3510–DR–P

DEPARTMENT OF COMMERCE

National Institute of Standards and Technology

[Docket No. 980413093–8093–01]

Notice of Termination of Validation Services for Federal Information Processing Standards (FIPS)

AGENCY: National Institute of Standards and Technology (NIST), Commerce.

ACTION: Notice; termination of validation services.

SUMMARY: The NIST is terminating validation services for the following Federal Information Processing Standards:

- FIPS 21–4, COBOL
- FIPS 69–1, Fortran
- FIPS 113, Computer Data Authentication
- FIPS 171, Key Management Using ANSI X9.17–1985.

The NIST announced on October 10, 1997, (62 FR 52976) that it would terminate validation services for FIPS 21–4, COBOL, and FIPS 69–1, Fortran, by September 30, 1998, or earlier if private industry validation services were established. Since such services are now available, NIST is terminating these validation services effective June 7, 1998.

NIST is also terminating validation services for FIPS 113 and FIPS 171 on June 7, 1998. Neither service has been used over the past few years. Verification of proper implementation

for these two standards will now be performed as part of the Cryptographic Module Validation Program (CMVP). Accredited Cryptographic Module Testing (CMT) Laboratories shall perform testing related to FIPS 113 and FIPS 171—if applicable—for cryptographic modules undergoing FIPS 140–1 validation testing, in accordance with guidance provided by NIST.

A Directory of Conformance Testing Programs, Products, and Services is available on the World Wide Web (WWW) at the Universal Resource Locator (URL)—http://www.nist.gov/ctdirectory.html. NIST test suites and testing procedures are distributed freely and are accessible from the Directory. Additional conformance testing information is available on the URL—http://www.nist.gov/div897/ctg.

EFFECTIVE DATE: June 7, 1998.

FOR FURTHER INFORMATION CONTACT:

For FIPS 21–4 and FIPS 69–1: Lynne S. Rosenthal, National Institute of Standards and Technology, Gaithersburg, MD 20899, telephone (301) 975–3353, e-mail lsr@nist.gov.

For FIPS 113 and FIPS 171: James G. Foti, National Institute of Standards and Technology, Gaithersburg, MD 20899, telephone (301) 975–5237, e-mail james.foti@nist.gov.

Authority: Federal Information Processing Standards Publications (FIPS PUBS) are issued by the National Institute of Standards and Technology after approval by the Secretary of Commerce pursuant to section 5131 of the Information Technology Management Reform Act of 1996, and the Computer Security Act of 1987, as amended, (Pub. L. 104–106).

Dated: April 29, 1998.

Robert E. Hebner,

Acting Deputy Director.

[FR Doc. 98–12140 Filed 5–6–98; 8:45 am]

BILLING CODE 3510–CN–M

COMMITTEE FOR THE IMPLEMENTATION OF TEXTILE AGREEMENTS

New Transshipment Charges for Certain Cotton and Man-Made Fiber Textile Products Produced or Manufactured in the People's Republic of China

May 5, 1998.

AGENCY: Committee for the Implementation of Textile Agreements (CITA).

ACTION: Issuing a directive to the Commissioner of Customs charging transshipments to 1998 limits.

EFFECTIVE DATE: May 7, 1998.

FOR FURTHER INFORMATION CONTACT: Lori Mennitt, International Trade Specialist, Office of Textiles and Apparel, U.S. Department of Commerce, (202) 482–3400.

SUPPLEMENTARY INFORMATION:

Authority: Section 204 of the Agricultural Act of 1956, as amended (7 U.S.C. 1854); Executive Order 11651 of March 3, 1972, as amended.

In a notice published in the **Federal Register** on September 11, 1996 (61 FR 47892), CITA announced that Customs would be conducting other investigations of transshipments of textiles produced in China and exported to the United States. Based on these investigations, the U.S. Customs Service has determined that textile products in certain categories, produced or manufactured in China and entered into the United States with the incorrect country of origin, were entered in circumvention of the Bilateral Textile Memorandum of Understanding (MOU) dated February 1, 1997 between the Governments of the United States and the People's Republic of China. Consultations were held between the Governments of the United States and the People's Republic of China on this matter November 5–7, 1997 and January 15–16, 1998. Pursuant to paragraph 13(E) of the February 1, 1997 MOU between the Governments of the United States and the People's Republic of China, the United States may charge three times the amounts transshipped to China's negotiated quantitative limits, with the amounts distributed equally over the remaining term of the agreement. Accordingly, charges will be made to each of the 1998, 1999 and 2000 quota years for Categories 331, 341, 347/348, 351, 352, 631, 636, 641, 647, 649 and 652. In the letter published below, the Chairman of CITA directs the Commissioner of Customs to charge the following amounts to the 1998 quota levels:

Category	Amounts to be charged
331	82,122 dozen pairs.
341	80 dozen.
347/348	518 dozen.
351	62 dozen.
352	7,692 dozen.
631	30,700 dozen pairs.
636	101 dozen.
641	1,309 dozen.
647	25 dozen.
649	3,061 dozen.
652	6,372 dozen.

U.S. Customs continues to conduct other investigations of such transshipments of textiles produced in China and exported to the United States. Any charges resulting from these investigations will be published in the **Federal Register**.

The U.S. Government is taking this action pursuant to the February 1, 1997 MOU between the Governments of the United States and the People's Republic of China.

A description of the textile and apparel categories in terms of HTS numbers is available in the CORRELATION: Textile and Apparel Categories with the Harmonized Tariff Schedule of the United States (see **Federal Register** notice 62 FR 66057, published on December 17, 1997). Also see 62 FR 67827, published on December 30, 1997.

Troy H. Cribb,

Chairman, Committee for the Implementation of Textile Agreements.

Committee for the Implementation of Textile Agreements

May 5, 1998.

Commissioner of Customs,

Department of the Treasury, Washington, DC 20229.

Dear Commissioner: To facilitate implementation of the Bilateral Textile Memorandum of Understanding dated February 1, 1997, between the Governments of the United States and the People's Republic of China, I request that, effective on May 7, 1998, you charge the following amounts to the following categories for the 1998 restraint period (see directive dated December 22, 1997):

Category	Amounts to be charged
331	82,122 dozen pairs.
341	80 dozen.
347/348	518 dozen.
351	62 dozen.
352	7,692 dozen.
631	30,700 dozen pairs.
636	101 dozen.
641	1,309 dozen.
647	25 dozen.
649	3,061 dozen.
652	6,372 dozen.

The Committee for the Implementation of Textile Agreements has determined that these actions fall within the foreign affairs exception to the rulemaking provisions of 5 U.S.C.553(a)(1).

Sincerely,

Troy H. Cribb,

Chairman, Committee for the Implementation of Textile Agreements.

[FR Doc. 98–12271 Filed 5–6–98; 8:45 am]

BILLING CODE 3510–DR–F

COMMITTEE FOR THE IMPLEMENTATION OF TEXTILE AGREEMENTS

Amendment of Quota, Visa and ELVIS (Electronic Visa Information System) Requirements for Certain Cotton and Man-Made Fiber Textile Products Produced or Manufactured in Thailand

May 1, 1998.

AGENCY: Committee for the Implementation of Textile Agreements (CITA).

ACTION: Issuing a directive to the Commissioner of Customs amending quota, visa and ELVIS requirements.

EFFECTIVE DATE: May 7, 1998.

FOR FURTHER INFORMATION CONTACT: Ross Arnold, International Trade Specialist, Office of Textiles and Apparel, U.S. Department of Commerce, (202) 482–4212.

SUPPLEMENTARY INFORMATION:

Authority: Section 204 of the Agricultural Act of 1956, as amended (7 U.S.C. 1854); Executive Order 11651 of March 3, 1862, as amended.

In exchange of notes dated December 8, 1997, January 20, 1998, February 6, 1998 and April 8, 1998, the Governments of the United States and Thailand agreed that discharge printed fabric classified in Harmonized Tariff Schedule (HTS) numbers 5208.52.3035, 5208.52.4035, 5209.51.6032 (Category 313), 5209.51.6015 (Category 314), 5208.52.4055 (Category 315), 5208.59.2085 (Category 317), 5208.59.2015, 5209.59.0015, 5211.59.0015 (Category 326), 5516.14.0005, 5516.14.0025 and 5516.14.0085 (Category 611) which is produced or manufactured in Thailand and imported on or after May 7, 1998 will no longer be subject to visa and ELVIS (Electronic Visa Information System) requirements and will not be subject to 1998 limits. The new designations for Categories 313, 314, 315, 317, 326, 317/326 and 611 will be part-category 313–O, 314–O, 315–O, 317–O, 326–O, 317–O/326–O and 611–O, respectively. The 1998 quota levels established for Categories 313, 314, 315, 317/326 and 611 remain the same for the newly established part-categories.

Also effective on May 7, 1998, products in Categories 313, 314, 315, 317, 326 and 611, produced or manufactured in Thailand and exported from Thailand on or after April 8, 1998 must be accompanied by a 313–O, 314–O, 315–O, 317–O, 326–O and 611–O part-category visa and ELVIS transmission. Products currently visaed as 317/326 which are exported from Thailand on or after April 8, 1998 must be accompanied by either a 317–O/326–O merged part-category visa 317/326 and ELVIS transmission, or the correct part-category visa and ELVIS transmission (317–O or 326–O) corresponding to the actual shipment. There will be a grace period from April 8, 1998 through June 7, 1998 during which products exported from Thailand in Categories 313, 314, 315, 317/326 and 611 may be accompanied by the whole or new part-category visa and ELVIS transmission. During the grace period, products visaed in merged Categories 317–O/326–O may be accompanied by a 317–O/326–O merged part-category visa and ELVIS transmission, a 317/326 merged whole category visa or the correct whole or part-category visa and ELVIS transmission (317, 326, 317–O or 326–O).

In the letter published below, the Chairman of CITA directs the Commissioner of Customs to amend the export quota, visa and ELVIS requirements.

A description of the textile and apparel categories in terms of HTS numbers is available in the CORRELATION: Textile and Apparel Categories with the Harmonized Tariff Schedule of the United States (see **Federal Register** notice 62 FR 66057, published on December 17, 1997). Also see 42 FR 5994, published in February 1, 1977; 57 FR 2713, published on January 23, 1992; and 62 FR 60829, published on November 13, 1997.

Troy H. Cribb,

Chairman, Committee for the Implementation of Textile Agreements.

Committee for the Implementation of Textile Agreements

May 1, 1998.

Commissioner of Customs,
Department of the Treasury, Washington, DC 20229.

Dear Commissioner: This directive amends, but does not cancel, the directive issued to you on December 5, 1997, by the Chairman, Committee for the Implementation of Textile Agreements. That directive concerns imports of certain cotton, wool, man-made fiber, silk blend and other vegetable fiber textiles and textile products, produced or manufactured in Thailand and exported during the twelve-month period which begins on January 1, 1998 and extends through December 31, 1998.

Effective on May 7, 1998, discharge printed fabric classified in Harmonized Tariff Schedule (HTS) numbers 5208.52.3035, 5208.52.4035, 5209.51.6032 (Category 313), 5209.51.6015 (Category 314), 5208.52.4055 (Category 315), 5208.59.2085 (Category 317), 5208.59.2015, 5209.59.0015, 5211.59.0015 (Category 326), 5516.14.0005, 5516.14.0025 and 5516.14.0085 (Category 611) which is produced or manufactured in Thailand and imported on or after May 7, 1998 will no longer be subject to visa and ELVIS (Electronic Visa Information System) requirements and will not be subject to 1998 limits, regardless of the date of export, pursuant to exchange of notes dated December 8, 1997, January 20, 1998, February 6, 1998 and April 8, 1998. The new designations for Categories 313, 314, 315, 317, 326, 317/326 and 611 will be part-Categories 313–O [1], 314–O [2], 315–O [3], 317–O [4], 326–O [5], 317–O/326–O and 611–O [6], respectively.

The 1998 quota levels established for Categories 313, 314, 315, 317/326 and 611 remain the same for the newly established part-Categories 313–O, 314–O, 315–O, 317–O/326–O and 611–O.

Also effective on May 7, 1998, you are directed to amend further the directive dated January 16, 1992 to require a part-category visa and ELVIS transmission for Categories 313–O, 314–O, 315–O, 317–O, 326–O and 611–O, produced or manufactured in Thailand and exported on or after April 8, 1998. Products currently visaed as merged Categories 317/326 which are exported from Thailand on or after April 8, 1998 must be accompanied by either a 317–O/326–O merged part-category visa and ELVIS transmission or the correct part-category visa and ELVIS transmission (317–O or 326–O) corresponding to the actual shipment. There will be a grace period from April 8, 1998 through June 7, 1998 during which products exported from Thailand in Categories 313, 314, 315, 317/326 and 611 may be accompanied by the whole or new part-category visa and ELVIS transmission. During the grace period, products visaed in merged Categories 317–O/326–O may be accompanied by a 317–O/326–O merged part-category visa and ELVIS transmission, a 317/326 merged whole category visa and ELVIS transmission, or the correct whole or part-category visa and ELVIS transmission (317, 326, 317–O or 326–O).

Shipments entered or withdrawn from warehouse according to this directive which are not accompanied by an appropriate export visa and ELVIS transmission shall be denied entry and a new visa and ELVIS transmission must be obtained.

The Committee for the Implementation of Textile Agreements has determined that these actions fall within the foreign affairs exception to the rulemaking provisions of 5 U.S.C. 553(a)(1).

Sincerely,

Troy H. Cribb,

Chairman, Committee for the Implementation of Textile Agreements.

[FR Doc. 98–12084 Filed 5–6–98; 8:45 am]

BILLING CODE 3510–DR–F

[1] Category 313–O: all HTS numbers except 5208.52.3035, 5208.52.4035 and 5209.51.6032.

[2] Category 314–O: all HTS numbers except 5209.51.6015.

[3] Category 315–O: all HTS numbers except 5208.52.4055.

[4] Category 317–O: all HTS numbers except 5208.59.2085.

[5] Category 326–O: all HTS numbers except 5208.59.2015, 5209.59.0015 and 5211.59.0015.

[6] Category 611–O: all HTS numbers except 5516.14.0005, 5516.14.0025 and 5516.14.0085.

DEPARTMENT OF DEFENSE

Defense Logistics Agency

Membership of the defense Logistics Agency (DLA) Performance Review Board (PRB)

AGENCY: Defense Logistics Agency, Department of Defense.

ACTION: Notice of membership of the DLA PRB.

SUMMARY: This notice announces the appointment of the members of the PRBs of the Defense Logistics Agency. The publication of PRB composition is required by 5 U.S.C. 4314(c)(4).

The PRB provides fair and impartial review of Senior Executive Service performance appraisals and makes recommendations to the Director, Defense Logistics Agency, with respect to pay level adjustments and performance awards.

EFFECTIVE DATE: July 1, 1998.

FOR FURTHER INFORMATION CONTACT: Ms. Donna Arellano, Workforce Effectiveness and Development Group, Human Resources, Defense Logistics Agency, Department of Defense, Ft. Belvoir, Virginia, (703) 767–6427.

SUPPLEMENTARY INFORMATION: In accordance with 5 U.S.C. 4314(c)(4), the following are the names and titles of Defense Logistics Agency personnel appointed to serve as members of the PRBs. Members will serve a 1-year renewable term, effective upon publication of this notice.

1st Level PRB:

Chair: Ms. Roberta Eaton, Special Assistant for Integrity in Contracting, General Counsel

Member: Mr. Frank Lotts, Deputy Commander, Defense Supply Center, Richmond Mr. Thomas Brunk, Executive Director, Operational Assessment and Programming, Defense Contract Management Command

2nd Level PRB:

Chair: Mr. Gary Thurber, Deputy Commander, Defense Contract Management Command

Member: Ms. Linda Furiga, Comptroller, Mr. George Allen, Deputy Commander, Defense Support Center Philadelphia.

A.C. Ressler,

Director, Corporate Administration, Defense Logistics Agency.

[FR Doc. 98–12186 Filed 5–6–98; 8:45 am]

BILLING CODE 3620–01–M

DEPARTMENT OF ENERGY

Federal Energy Regulatory Commission

[Docket No. GT98–37–000]

Algonquin Gas Transmission Company; Notice of Proposed Changes in FERC Gas Tariff

May 1, 1998.

Take notice that on April 29, 1998, Algonquin Gas Transmission Company (Algonquin) tendered for filing as part of its FERC Gas Tariff, Fourth Revised Volume No. 1, the following tariff sheet to become effective May 30, 1998:

Second Revised Sheet No. 15

Algonquin states that the purpose of the filing is to update the system map to reflect its current principal pipeline facilities and the points at which service is rendered, as required by Section 154.106 of the Commission's Regulations.

Algonquin states that copies of the filing were mailed to affected customers of Algonquin and interested state commissions.

Any person desiring to be heard or to protest this filing should file a motion to intervene or a protest with the Federal Energy Regulatory Commission, 888 First Street, N.E., Washington, D.C. 20426, in accordance with Sections 385.214 and 385.211 of the Commission's Rules and Regulations. All such motions or protests must be filed as provided in Section 154.210 of the Commission's Regulations. Protests will be considered by the Commission in determining the appropriate action to be taken, but will not serve to make protestants parties to the proceedings. Any person wishing to become a party must file a motion to intervene. Copies of this filing are on file with the Commission and are available for public inspection in the Public Reference Room.

Linwood A. Watson, Jr.,

Acting Secretary.

[FR Doc. 98–12066 Filed 5–6–98; 8:45 am]

BILLING CODE 6717–01–M

DEPARTMENT OF ENERGY

Federal Energy Regulatory Commission

[Docket No. RP98–196–000]

Algonquin Gas Transmission Company; Notice of Proposed Changes in FERC Gas Tariff

May 1, 1998.

Take notice that on April 29, 1998, Algonquin Gas Transmission Company (Algonquin) tendered for filing as part of its FERC Gas Tariff, Fourth Revised Volume No. 1, the following revised tariff sheets to become effective May 31, 1998:

Thirty First Revised Sheet No. 20A
Original Sheet No. 98K

Algonquin states that the filing is submitted pursuant to Section 37.1(f), Transition Costs Relating to Retained Capacity, of the General Terms and Conditions of its FERC Gas Tariff. Algonquin states that the purpose of the filing is to provide for the recovery of upstream transition costs of $5,519.88 billed to Algonquin by Texas Eastern Transmission Corporation.

Algonquin states that the upstream transition costs to be recovered pursuant to this filing are allocated to Algonquin's customers in accordance with Section 37.1(f) of the General Terms and Conditions of Algonquin's FERC Gas Tariff, Fourth Revised Volume No. 1.

Algonquin states that copies of the filing were mailed to all affected customers and interested state commissions.

Any person desiring to be heard or to protest this filing should file a motion to intervene or a protest with the Federal Energy Regulatory Commission, 888 First Street, NE., Washington, DC 20426, in accordance with Sections 385.214 and 385.211 of the Commission's Rules and Regulations. All such motions or protests must be filed as provided in Section 154.210 of the Commission's Regulations. Protests will be considered by the Commission in determining the appropriate action to be taken, but will not serve to make protestants parties to the proceedings. Any person wishing to become a party must file a motion to intervene. Copies of this filing are on file with the Commission and are available for public inspection in the Public Reference Room.

Linwood A. Watson, Jr.,

Acting Secretary.

[FR Doc. 98–12069 Filed 5–6–98; 8:45 am]

BILLING CODE 6717–01–M

DEPARTMENT OF ENERGY

Federal Energy Regulatory Commission

[Docket No. IN98–3-000]

Consumers Energy Company; Notice of Informal Settlement Conference

May 1, 1998.

Take notice that an informal settlement conference will be convened in this proceeding on Thursday, May 21, 1998 at 10:00 a.m., at the offices of the Federal Energy Regulatory Commission, 888 First Street, N.E., Washington, D.C., for the purpose of exploring the possible settlement of the above-referenced docket. If necessary, the conference will continue to Friday, May 22, 1998.

Any party, as defined by 18 CFR 385.102(c), or any participant, as defined by 18 CFR 385.102(b), is invited to attend. Persons wishing to become a party must move to intervene and receive intervenor status pursuant to the Commission's regulations (18 CFR 385.214).

For additional information, contact Gerald L. Richman at (202) 208–2036.

Linwood A. Watson, Jr.,

Acting Secretary.

[FR Doc. 98–12067 Filed 5–6–98; 8:45 am]

BILLING CODE 6717–01–M

DEPARTMENT OF ENERGY

Federal Energy Regulatory Commission

[Docket No. GT98–36–000]

Great Lakes Gas Transmission Limited Partnership; Notice of Proposed Changes in FERC Gas Tariff

May 1, 1998.

Take notice that on April 29, 1998, Great Lakes Gas Transmission Limited Partnership (Great Lakes) tendered for filing as part of its FERC Gas Tariff, Second Revised Volume No. 1, the following tariff sheets, proposed to become effective January 1, 1998:

Third Revised Sheet No. 3
Second Revised Sheet No. 3A
Second Revised Sheet No. 3B
Second Revised Sheet No. 3C

Great Lakes states that the tariff sheets listed above are being filed to revise the system and zone maps included in Great Lakes' tariff pursuant to Section 154.106(c) of the Commission's regulations. The revisions to the maps reflect the addition of the Clearbrook meter station to Great Lakes' system, the name change of several interconnect operators, and the correction of minor errors.

Any persons desiring to be heard or to protest this filing should file a motion to intervene or a protest with the Federal Energy Regulatory Commission, 888 First Street, N.E., Washington, D.C. 20426, in accordance with Sections 385.214 and 385.211 of the Commission's Rules and Regulations. All such motions or protests must be filed as provided in Section 154.210 of the Commission's Regulations. Protests will be considered by the Commission in determining the appropriate action to be taken, but will not serve to make protestants parties to the proceedings. Any person wishing to become a party must file a motion to intervene. Copies of this filing are on file with the Commission and are available for public inspection in the Public Reference Room.

Linwood A. Watson, Jr.,

Acting Secretary.

[FR Doc. 98–12065 Filed 8–6–98; 8:45 am]

BILLING CODE 6717–01–M

DEPARTMENT OF ENERGY

Federal Energy Regulatory Commission

[Docket No. RP97–142–008]

K N Interstate Gas Transmission Co.; Notice of Tariff Filing

May 1, 1998.

Take notice that on April 28, 1998, K N Interstate Gas Transmission Co. (KNI), tendered for filing as part of its FERC Gas Tariff, the following actual tariff sheets, to be effective November 1, 1997:

Third Revised Volume No. 1–B

Second Revised Sheet No. 5
Second Revised Sheet No. 6
Second Revised Sheet No. 19
Second Revised Sheet No. 20
First Revised Sheet No. 20A
First Revised Sheet No. 23
First Revised Sheet No. 24
First Revised Sheet No. 72
First Revised Sheet No. 73

First Revised Volume No. 1–D

Second Revised Sheet No. 4
Second Revised Sheet No. 5
Second Revised Sheet No. 18
First Revised Sheet No. 18A
First Revised Sheet No. 18B
Original Sheet No. 18C
First Revised Sheet No. 20
First Revised Sheet No. 21
First Revised Sheet No. 60
Second Revised Sheet No. 61

KNI states that the above referenced actual tariff sheets are being filed in compliance with the Commission's July 3, 1997 order, in Docket No. RP97–142–003, to be effective November 1, 1997. The July 3 order approved the ProForma sheets filed on May 1, 1997, and directed KNI to file actual tariff sheets. On October 1, 1997, in Docket No. RP97–142–006, KNI filed actual Second Revised Sheet No. 89A, Third Revised Volume No. 1–B, and Second Revised Sheet No. 71A, First Revised Volume No. 1–D, in compliance with the Commission's order and which were subsequently approved. However, due to an administrative oversight, the tariff sheets referenced above in this filing were not included in the October 1 filing as required. Therefore, KNI is hereby submitting for filing and accepted, the above referenced tariff sheets, to be effective November 1, 1997.

KNI states that copies of the filing were served upon KNI's jurisdictional customers, interested public bodies and all parties to the proceeding.

Any person desiring to protest this filing should file a protest with the Federal Regulatory Commission, 888 First Street, N.E., Washington, D.C. 20426, in accordance with Section 385.211 of the Commission's Rules and Regulations. All such protests must be filed as provided in Section 154.210 of the Commission's Regulations. Protests will be considered by the Commission in determining the appropriate action to be taken, but will not serve to make protestants parties to the proceedings. Copies of this filing are on file with the Commission and are available for public inspection in the Public Reference Room.

Linwood A. Watson, Jr.,

Acting Secretary.

[FR Doc. 98–12076 Filed 5–6–98; 8:45 am]

BILLING CODE 6717–01–M

DEPARTMENT OF ENERGY

Federal Energy Regulatory Commission

[Docket No. CP98–125–001]

MIGC, Inc.; Notice of Amendment

May 1, 1998.

Take notice that on April 23, 1998, MIGC, Inc. (MIGC), 12200 N. Pecos Street, Denver, Colorado 80234, filed in Docket No. CP98–125–001 an amendment to the pending application filed on December 9, 1997, in Docket No. CP98–125–000, pursuant to Section 7(c) of the Natural Gas Act (NGA), to reflect a change in compression facilities for which certificate authorization is sought, all as more fully set forth in the amendment which is on file with the Commission and open to public inspection.

By the pending application in Docket No. CP98–125–000, MIGC proposes to

install and operate compression, and related appurtenant facilities, at the Hilight Processing Plant in Campbell County, Wyoming and at the Platte River Compressor Station in Converse County, Wyoming, in order to alleviate an existing capacity constraint on MIGC's system.

In the subject amendment, MIGC seeks to modify its original request for certificate authority by requesting authorization to install two 1610 hp reciprocating compression units at the Hilight Processing Plant in place of the two 1360 hp reciprocating compression units originally sought. In addition, MIGC requests authorization to install one 3300 hp centrifugal (gas turbine-driven) compression unit at the Platte River Compressor Station in place of the two 7042 hp reciprocating compression units originally requested.

MIGC states that the revised cost of the proposed project is estimated to be $6,197,000. In addition, MIGC states that the request for rolled-in rate treatment for the facilities will not result in any rate increase to existing customers.

Any person desiring to be heard or to make any protest with reference to said amendment should on or before May 22, 1998, file with the Federal Energy Regulatory Commission, 888 First Street, N.E., Washington, D.C. 20426, a motion to intervene or a protest in accordance with the requirements of the Commission's Rules of Practice and Procedure (18 CFR 385.214 or 385.211) and the Regulations under the Natural Gas Act (18 CFR 157.10). All protests filed with the Commission will be considered by it in determining the appropriate action to be taken but will not serve to make the protestants parties to the proceeding. Any person wishing to become a party to a proceeding or to participate as a party in any hearing therein must file a motion to intervene in accordance with the Commission's Rules. All persons who have heretofore filed need to file again.

Linwood A. Watson, Jr.,

Acting Secretary.

[FR Doc. 98–12074 Filed 5–6–98; 8:45 am]

BILLING CODE 6717–01–M

DEPARTMENT OF ENERGY

Federal Energy Regulatory Commission

[Project Nos. 2901–000 and 2902–000]

Nekoosa Packaging Corporation; Notice of Commission Staff Meeting With Nekoosa Packaging Corporation on Re-Licensing of Big Island and Holcomb Rock Hydroelectric Projects

May 1, 1998.

Nekoosa Packaging Corporation (Nekoosa), a wholly owned subsidiary of Georgia-Pacific Corporation is preparing License Applications and a Draft Environmental Assessment (DEA) for the Big Island and Holcomb Rock Hydroelectric Projects (Project Nos. 2901 and 2902, respectively) located on the James River, in Bedford and Amherst Counties, Virginia. The DEA is being prepared in coordination with representatives from various federal, state and local agencies, non-governmental organizations, and local interest groups. The DEA and license applications will be filed with the Commission no later than December 31, 1998.

Nekoosa mailed a copy of Sections 5 and 6 of the preliminary DEA, and a copy of Scoping Document 2, to all parties, including the Commission, on April 27, 1998. Commission staff has reviewed the documents and will attend a meeting, as follows, to discuss and make recommendations to be included in the preliminary DEA.

Meeting Date: May 12, 1998, 9 a.m.

Location: Georgia-Pacific Corporation's big Island Mills compound, Highway 501 North, Big Island, Virginia 24526

Interested parties are welcome to attend this meeting. For further information please contact the following individuals:

C. Richard Judy, Nekoosa Packaging Corporation, Big Island, Virginia 24526, (804) 299–5911

James T. Griffin, Federal Energy Reg. Comm., 888 First Street, NE, Mailstop HL–11.3, Washington, DC 20426, (202) 219–2799

Linwood A. Watson, Jr.,

Acting Secretary.

[FR Doc. 98–12073 Filed 5–6–98; 8:45 am]

BILLING CODE 6717–01–M

DEPARTMENT OF ENERGY

Federal Energy Regulatory Commission

[Docket Nos. OA97–25–000, OA97–606–000, ER98–1890–000, ER98–2060–000, EL98–40–000]

Northern States Power Company (Minnesota) and Northern States Power Company (Wisconsin); Notice of Initiation of Proceeding and Refund Effective Date

May 1, 1998.

Take notice that on April 30, 1998, the Commission issued an order in the above-indicated dockets initiating a proceeding in Docket No. EL98–40–000 under section 206 of the Federal Power Act.

The refund effective date in Docket No. EL98–40–000 will be 60 days after publication of this notice in the **Federal Register**.

Linwood A. Watson, Jr.,

Acting Secretary.

[FR Doc. 98–12071 Filed 5–6–98; 8:45 am]

BILLING CODE 6717–01–M

DEPARTMENT OF ENERGY

Federal Energy Regulatory Commission

[Docket No. CP98–372–000]

Northwest Pipeline Corporation; Notice of Request Under Blanket Authorization

May 1, 1998.

Take notice that on April 23, 1998, Northwest Pipeline Corporation (Northwest), 295 Chipeta Way, Salt Lake City, Utah 84158–0900, filed in Docket No. CP98–372–000, a request, pursuant to §§ 157.205, 157.216, and 157.211 of the Commission's Regulations under the Natural Gas Act (18 CFR 157.205, 157.216, and 157.211), for authorization to abandon by removal its existing Moses Lake Meter Station and its existing U&I Sugar Meter Station in Grant County, Washington and to construct and operate a new combined, replacement Moses Lake Meter Station at the same site to better accommodate existing natural gas delivery requirements to Cascade Natural Gas Corporation (Cascade), under Northwest's blanket certificate authorization issued in Docket No. CP82–433–000, pursuant to Section 7 of the Natural Gas Act, all as more fully set forth in the request which is on file with the Commission and open to public inspection.

Northwest reports that the new Moses Lake Meter Station will have a maximum design capacity of approximately 27,911 Dth per day at 300 psig, which is sufficient to accommodate the combined existing firm delivery obligations at the two existing meter stations. Northwest relates that the removed facilities will either be returned to stock, scrapped or salvaged for reuse in the new Moses Lake Meter Station. Northwest asserts that no abandonment of service will occur. Northwest states it has sent a copy of this filing to the Washington Transportation and Utilities Commission which has regulatory authority over gas deliveries to customers served through the affected delivery meters.

Northwest estimates the total cost of the proposed new Moses Lake Meter Station to be approximately $556,809. Because this investment is necessary for Northwest to better accommodate existing delivery requirements to cascade, Northwest indicates that it will not require any cost reimbursement from Cascade.

Northwest states that any deliveries made to Cascade through the new Moses Lake Meter Station will be transportation gas delivered either for Cascade or other shippers for whom Northwest is authorized to transport gas. Northwest says that any volumes delivered to the Moses Lake delivery point will be within the authorized entitlement of such shippers. Northwest states that its tariff does not prohibit the addition or modification of delivery point facilities.

Any person or the Commission's staff may, within 45 days after issuance of the instant notice by the Commission, file with the Federal Energy Regulatory Commission, 888 First Street, NE, Washington, DC 20426, pursuant to Rule 214 of the Commission's Procedural Rules (18 CFR 385.214), a motion to intervene or notice of intervention and pursuant to § 157.205 of the Regulations under the Natural Gas Act (18 CFR 157.205) a protest to the request. If no protest is filed within the time allowed therefore, the proposed activity shall be deemed to be authorized effective the day after the time allowed for filing a protest. If a protest is filed and not withdrawn within 30 days after the time allowed for filing a protest, the instant request shall be treated as an application for authorization pursuant to Section 7 of the Natural Gas Act.

Linwood A. Watson, Jr.,

Acting Secretary.

[FR Doc. 98–12075 Filed 5–6–98; 8:45 am]

BILLING CODE 6717–01–M

DEPARTMENT OF ENERGY

Federal Energy Regulatory Commission

[Docket No. ER97–4345–000]

OGE Energy Resources, Inc., Notice of Filing

May 1, 1998.

Take notice that on February 4, 1998, OGE Energy Resources, Inc. (OERI), filed a notification of a change in status to reflect certain departures from the facts the Commission relief upon in granting market-based rate authority.

Any person desiring to be heard or to protest said filing should file a motion to intervene or protest with the Federal Energy Regulatory Commission, 888 First Street, NE, Washington, DC 20426, in accordance with Rules 211 and 214 of the Commission's Rules of Practice and Procedure (18 CFR 385.211 and 18 CFR 385.214). All such motions and protests should be filed on or before May 11, 1998. Protests will be considered by the Commission to determine the appropriate action to be taken, but will not serve to make protestants parties to the proceedings. Any person wishing to become a party must file a motion to intervene. Copies of this filing are on file with the Commission and are available for public inspection.

Linwood A. Watson, Jr.,

Acting Secretary.

[FR Doc. 98–12119 Filed 5–6–98; 8:45 am]

BILLING CODE 6717–01–M

DEPARTMENT OF ENERGY

Federal Energy Regulatory Commission

[Docket No. RP98–195–000]

Southwest Gas Storage Company; Notice of Proposed Changes in FERC Gas Tariff

May 1, 1998.

Take notice that on April 28, 1998, Southwest Gas Storage Company (Southwest) tendered for filing as part of its FERC Gas Tariff, Original Volume No. 1 and Original Volume No. 2, the tariff sheets listed on Appendix A attached to the filing to be effective May 29, 1998.

Southwest states that the purpose of this filing is to move Rate Schedule S–1 from Southwest's Original Volume No. 1 tariff to Southwest's Original Volume No. 2 tariff. In accordance with Section 154.112 of the Commission's Regulations, Southwest is (1) modifying Sheet Nos. 1, 4 and 5 of its Original Volume No. 1 FERC Gas Tariff to delete Rate Schedule S–1 and (2) resubmitting the contents of Rate Schedule S–1 as its Original Volume No. 2 FERC Gas Tariff. The text of Rate Schedule S–1 is unchanged. This tariff filing will segregate Southwest's open access Rate Schedules FSS and ISS from its individually certificated service provided under Rate Schedule S–1.

Southwest is also including on the electronic version of the Original Volume No. 1 tariff sheets, three sheets to complete the Commission's FASTR database for Southwest's Original Volume No. 1 tariff—the Title Page, Original Sheet No. 2 and Original Sheet No. 3.

Southwest states that copies of this filing are being served on all affected customers and applicable state regulatory agencies.

Any person desiring to be heard or to protest this filing should file a motion to intervene or a protest with the Federal Energy Regulatory Commission, 888 First Street, N.E., Washington, D.C. 20426, in accordance with Sections 385.214 and 385.211 of the Commission's Rules and Regulations. All such motions or protests must be filed as provided in Section 154.210 of the Commission's Regulations. Protests will be considered by the Commission in determining the appropriate action to be taken, but will not serve to make protestants parties to the proceedings. Any person wishing to become a party must file a motion to intervene. Copies of this filing are on file with the Commission and are available for public inspection in the Public Reference Room.

Linwood A. Watson, Jr.,

Acting Secretary.

[FR Doc. 98–12068 Filed 5–6–98; 8:45 am]

BILLING CODE 6717–01–M

DEPARTMENT OF ENERGY

Federal Energy Regulatory Commission

[Docket No. ER98–1767–002]

Tenaska Frontier Partners, Ltd.; Notice of Filing

May 1, 1998.

Take notice that on April 8, 1998, Tenaska Frontier Partners, Ltd., filed

supplemental information to Rate Schedule No. 1 to comply with Ordering Paragraph (F) of the Commission's order issued March 30, 1998, in Tenaska Frontier Partners, Ltd., Docket No. ER97–1767–000 (82 FERC ¶ 61,323).

Any person desiring to be heard or to protest said filing should file a motion to intervene or protest with the Federal Energy Regulatory Commission, 888 First Street, NE., Washington, DC 20426, in accordance with Rules 211 and 214 of the Commission's Rules and Practice and Procedure (18 CFR 385.211 and 18 CFR 385.214). All such motions and protests should be filed on or before May 11, 1998. Protests will be considered by the Commission to determine the appropriate action to be taken, but will not serve to make protestants parties to the proceedings. Any person wishing to become a party must file a motion to intervene. Copies of this filing are on file with the Commission and are available for public inspection.

Linwood A. Watson, Jr.,

Acting Secretary.

[FR Doc. 98–12120 Filed 5–6–98; 8:45 am]

BILLING CODE 6717–01–M

DEPARTMENT OF ENERGY

Federal Energy Regulatory Commission

[Docket No. ER98–1767–001]

Tenaska Frontier Partners, Ltd., Notice of Filing

May 1, 1998.

Take notice that on April 8, 1998, Tenaska Frontier Partners, Ltd., filed supplemental information to Rate Schedule No. 1 to comply with Ordering Paragraph (F) of the Commission's order issued March 30, 1998, in Tenaska Frontier Partners, Ltd., Docket No. ER97–1767–000 (82 FERC ¶ 61,323).

Any person desiring to be heard or to protest said filing should file a motion to intervene or protest with the Federal Energy Regulatory Commission, 888 First Street, NE., Washington, DC 20426, in accordance with Rules 211 and 214 of the Commission's Rules of Practice and Procedure (18 CFR 385.211 and 18 CFR 385.214). All such motions and protests should be filed on or before May 11, 1998. Protests will be considered by the Commission to determine the appropriate action to be taken, but will not serve to make protestants parties to the proceedings. Any person wishing to become a party must file a motion to intervene. Copies of this filing are on file with the Commission and are available for public inspection.

Linwood A. Watson, Jr.,

Acting Secretary.

[FR Doc. 98–12121 Filed 5–6–98; 8:45 am]

BILLING CODE 6717–01–M

DEPARTMENT OF ENERGY

Federal Energy Regulatory Commission

[Docket Nos. RP98–198–000 and RP85–177–126]

Texas Eastern Transmission Corporation; Notice of Stipulation and Agreement

May 1, 1998.

Take notice that on April 28, 1998, pursuant to Rule 602 of the Rules of Practice and Procedure of the Commission, 18 CFR 385.602 Texas Eastern Transmission Corporation (Texas Eastern) and the Sponsoring Parties submit a Joint Stipulation and Agreement Amending Global Settlement (offer of Settlement) as a limited amendment to the Stipulation and Agreement approved by the Commission in Texas Eastern Transmission Corporation, Docket Nos. RP95–177 (Global Settlement).

Texas Eastern states that the offer of settlement is designed as a limited modification of the Global Settlement in response to concerns of Texas Eastern and Texas Eastern's customers relating to restructuring a the local level and the increased competitive environment in the marketplace. Texas Eastern also states that the offer of settlement is also designed to reduce and, thus, render more competitive Texas Eastern's rates in the near future, to the benefit of Texas Eastern, its customers and consumers.

Texas Eastern states that copies of the filing are being served contemporaneously on all participants listed on the service list in this proceeding.

Pursuant to Rule 602, Initial Comments must be filed on or before May 18, 1998 and Reply Comments will be due on May 28, 1998.

Any person desiring to be heard or to protest this filing should file a motion to intervene or a protest with the Federal Energy Regulatory Commission, 888 First Street, N.E., Washington, D.C. 20426, in accordance with Sections 385.214 and 385.211 of the Commission's Rules and Regulations. All such motions or protests must be filed on or before May 18, 1998. Persons who are already a party to the Docket No. RP85–177–000, *et al.*, proceeding, do not have to file a motion to intervene. Protests will be considered by the Commission in determining the appropriate action to be taken, but will not serve to make protestants parties to the proceedings. Any person wishing to become a party must file a motion to intervene. Copies of this filing are on file with the Commission and are available for public inspection in the Public Reference Room.

Linwood A. Watson, Jr.,

Acting Secretary.

[FR Doc. 98–12072 Filed 5–6–98; 8:45 am]

BILLING CODE 6717–01–M

DEPARTMENT OF ENERGY

Federal Energy Regulatory Commission

[Docket No. RP98–197–000]

Viking Gas Transmission Company; Notice of Proposed Changes in FERC Gas Tariff

May 1, 1998.

Take notice that on April 29, 1998, Viking Gas Transmission Company (Viking) tendered for filing as part of its FERC Gas Tariff, First Revised Volume No. 1, the following tariff sheets to become effective June 1, 1998:

Eleventh Revised Sheet No. 6
Fourth Revised Sheet No. 6A
Fourth Revised Sheet No. 14
Second Revised Sheet No. 15D
Fifth Revised Sheet No. 19
Fourth Revised Sheet No. 24
Fourth Revised Sheet No. 29
Fifth Revised Sheet No. 39
Fifth Revised Sheet No. 87
Original Sheet No. 87A

Viking states that the purpose of this filing is to establish a tariff mechanism to allow Viking to adjust annually Fuel and Loss Retention Percentages (FLRP) in accordance with § 154.403 of the Commission's Rules and Regulations. 18 C.F.R. § 154.403 (1997). Viking is proposing that it make annual adjustments in place of the seasonal rates it currently uses because annual numbers more accurately reflect Viking's experience than seasonal numbers. Viking is also filing proposed FLRPs derived in accordance with its proposed tariff mechanism. Finally, Viking is filing to correct its tariff to reflect the incorporation of FLRPs on Sheet No. 6A.

Viking states that copies of the filing have been mailed to all of its jurisdictional customers and to affected state regulatory commissions.

Any person desiring to be heard or to protest this filing should file a motion to intervene or a protest with the

Federal Energy Regulatory Commission, 888 First Street, N.E., Washington, D.C. 20426, in accordance with Sections 385.214 and 385.211 of the Commission's Rules and Regulations. All such motions or protests must be filed as provided in Section 154.210 of the Commission's Regulations. Protests will be considered by the Commission in determining the appropriate action to be taken, but will not serve to make protestants parties to the proceedings. Any person wishing to become a party must file a motion to intervene. Copies of this filing are on file with the Commission and are available for public inspection in the Public Reference Room.

Linwood A. Watson, Jr.,

Acting Secretary.

[FR Doc. 98–12070 Filed 5–6–98; 8:45 am]

BILLING CODE 6717–01–M

FEDERAL ELECTION COMMISSION

Sunshine Act

AGENCY: Federal Election Commission.

* * * * *

FEDERAL REGISTER NUMBER: 98–10197.

PREVIOUSLY ANNOUNCED DATE & TIME: Tuesday, April 28, 1998, 10:00 a.m., meeting closed to the public.

This meeting was cancelled.

* * * * *

PREVIOUSLY ANNOUNCED DATE & TIME: Thursday, April 30, 1998, 10:00 a.m., meeting closed to the public.

Meeting time changed to 2:00 p.m.

* * * * *

DATE & TIME: Tuesday, May 12, 1998 at 10:00 a.m.

PLACE: 999 E Street, NW., Washington, DC.

STATUS: This meeting will be closed to the public.

ITEMS TO BE DISCUSSED:

Compliance matters pursuant to 2 U.S.C. § 437g.

Audits conducted pursuant to 2 U.S.C. § 437g, § 438(b), and Title 26, U.S.C.

Matters concerning participation in civil actions or proceedings or arbitration.

Internal personnel rules and procedures or matters affecting a particular employee.

DATE & TIME: Thursday, May 14, 1998 at 10:00 a.m.

PLACE: 999 E Street, NW., Washington, DC (ninth floor).

STATUS: This meeting will be open to the public.

ITEMS TO BE DISCUSSED:

Correction and Approval of Minutes.

Advisory Opinion 1998–07: Pennsylvania Democratic Party by C.M. Tartaglione, Acting Chairman.

Advisory Opinion 1998–08: Iowa Democratic Party by Michael Peterson, Chairman.

Soft Money: Notice of Proposed Rulemaking (continued from meeting of April 30, 1998).

Administrative Matters.

PERSON TO CONTACT FOR INFORMATION: Mr. Ron Harris, Press Officer. Telephone: (202) 694–1220.

Marjorie W. Emmons,

Secretary of the Commission.

[FR Doc. 98–12244 Filed 5–5–98; 10:54 am]

BILLING CODE 6715–01–M

FEDERAL MARITIME COMMISSION

Ocean Freight Forwarder License; Applicants

Notice is hereby given that the following applicants have filed with the Federal Maritime Commission applications for licenses as ocean freight forwarders pursuant to section 19 of the Shipping Act of 1984 (46 U.S.C. app. 1718 and 46 CFR 510).

Persons knowing of any reason why any of the following applicants should not receive a license are requested to contact the Office of Freight Forwarders, Federal Maritime Commission, Washington, D.C. 20573.

Freight Connection Incorporated, 324 Garden Road, Springfield, PA 19064, Officers: Angela Wilson, President, Francis Wilson, Vice President.

Millennium Shipping Company, 4100 East 51st Street, Suite 104, Tulsa, OK 74135, Officers: Steven C. Reynolds, President, Charles L. Harmon, Vice President.

Express Air Cargo, Inc., 5242½ W. 104th Street, Los Angeles, CA 90045, Officers: Tom Aoyagi, President, Karen Aoyagi, Secretary/Treasurer.

AG World Transport, Inc. d/b/a Air & Ground World Transport, 402 Grandview Drive, South San Francisco, CA 94080, Officers: Edwin Chow, President, Gregory McLaughlin, Vice President.

Trans-Ocean International, Inc., 150 North Santa Anita Avenue, Suite #580, Arcadia, CA 91006, Officer: Ying Diao, President.

Cypress Cargo, Corp., 2740 W. 63 Street, #205m Hialeah, FL 33016, Officers: Ana R. Saavedra, President, Eric Gonzalez, Vice President.

Global Logistics International Inc., 1207 N.W., 93rd Ct., Miami, FL 33172, Officers: Evelyn A. Damian, President, Guillermo Damian, Vice President.

Tur Enterprises Inc. d/b/a Seven Winds Shipping, 8443 N.W., 68th Street, Miami, FL 33166, Officers: Miriam Z. Tur, President, Miriam Tur Ruenes, Vice President.

Dated: May 4, 1998.

Joseph C. Polking,

Secretary.

[FR Doc. 98–12115 Filed 5–6–98; 8:45 am]

BILLING CODE 6730–01–M

FEDERAL RESERVE SYSTEM

Formations of, Acquisitions by, and Mergers of Bank Holding Companies

The companies listed in this notice have applied to the Board for approval, pursuant to the Bank Holding Company Act of 1956 (12 U.S.C. 1841 *et seq.*) (BHC Act), Regulation Y (12 CFR Part 225), and all other applicable statutes and regulations to become a bank holding company and/or to acquire the assets or the ownership of, control of, or the power to vote shares of a bank or bank holding company and all of the banks and nonbanking companies owned by the bank holding company, including the companies listed below.

The applications listed below, as well as other related filings required by the Board, are available for immediate inspection at the Federal Reserve Bank indicated. The application also will be available for inspection at the offices of the Board of Governors. Interested persons may express their views in writing on the standards enumerated in the BHC Act (12 U.S.C. 1842(c)). If the proposal also involves the acquisition of a nonbanking company, the review also includes whether the acquisition of the nonbanking company complies with the standards in section 4 of the BHC Act. Unless otherwise noted, nonbanking activities will be conducted throughout the United States.

Unless otherwise noted, comments regarding each of these applications must be received at the Reserve Bank indicated or the offices of the Board of Governors not later than June 1, 1998.

A. Federal Reserve Bank of Minneapolis (Karen L. Grandstrand, Vice President) 90 Hennepin Avenue, P.O. Box 291, Minneapolis, Minnesota 55480-0291:

1. Community First Bankshares, Inc., Fargo, North Dakota; to merge with Western Bancshares of Las Cruces, Carlsbad, New Mexico, and thereby indirectly acquire Western Bank, Las Cruces, New Mexico.

Board of Governors of the Federal Reserve System, May 4, 1998.

Jennifer J. Johnson,

Deputy Secretary of the Board.

[FR Doc. 98–12191 Filed 5–6–98; 8:45 am]

BILLING CODE 6210–01–F

FEDERAL RESERVE SYSTEM

Notice of Proposals to Engage in Permissible Nonbanking Activities or to Acquire Companies that are Engaged in Permissible Nonbanking Activities

The companies listed in this notice have given notice under section 4 of the Bank Holding Company Act (12 U.S.C. 1843) (BHC Act) and Regulation Y, (12 CFR Part 225) to engage *de novo*, or to acquire or control voting securities or assets of a company, including the companies listed below, that engages either directly or through a subsidiary or other company, in a nonbanking activity that is listed in § 225.28 of Regulation Y (12 CFR 225.28) or that the Board has determined by Order to be closely related to banking and permissible for bank holding companies. Unless otherwise noted, these activities will be conducted throughout the United States.

Each notice is available for inspection at the Federal Reserve Bank indicated. The notice also will be available for inspection at the offices of the Board of Governors. Interested persons may express their views in writing on the question whether the proposal complies with the standards of section 4 of the BHC Act.

Unless otherwise noted, comments regarding the applications must be received at the Reserve Bank indicated or the offices of the Board of Governors not later than May 22, 1998.

A. Federal Reserve Bank of Atlanta (Lois Berthaume, Vice President) 104 Marietta Street, N.W., Atlanta, Georgia 30303-2713:

1. Republic Bancshares, Inc., St. Petersburg, Florida; to engage *de novo* through its subsidiary, Republic Bank, F.S.B., St. Petersburg, Florida (in organization), in operating a savings association, pursuant to § 225.28(b)(4)(ii) of the Board's Regulation Y.

Board of Governors of the Federal Reserve System, May 4, 1998.

Jennifer J. Johnson,

Deputy Secretary of the Board.

[FR Doc. 98–12192 Filed 5–6–98; 8:45 am]

BILLING CODE 6210–01–F

FEDERAL RESERVE SYSTEM

Formations of, Acquisitions by, and Mergers of Bank Holding Companies

The companies listed in this notice have applied to the Board for approval, pursuant to the Bank Holding Company Act of 1956 (12 U.S.C. 1841 *et seq.*) (BHC Act), Regulation Y (12 CFR Part 225), and all other applicable statutes and regulations to become a bank holding company and/or to acquire the assets or the ownership of, control of, or the power to vote shares of a bank or bank holding company and all of the banks and nonbanking companies owned by the bank holding company, including the companies listed below.

The applications listed below, as well as other related filings required by the Board, are available for immediate inspection at the Federal Reserve Bank indicated. The application also will be available for inspection at the offices of the Board of Governors. Interested persons may express their views in writing on the standards enumerated in the BHC Act (12 U.S.C. 1842(c)). If the proposal also involves the acquisition of a nonbanking company, the review also includes whether the acquisition of the nonbanking company complies with the standards in section 4 of the BHC Act. Unless otherwise noted, nonbanking activities will be conducted throughout the United States.

Unless otherwise noted, comments regarding each of these applications must be received at the Reserve Bank indicated or the offices of the Board of Governors not later than May 29, 1998.

A. Federal Reserve Bank of Minneapolis (Karen L. Grandstrand, Vice President) 90 Hennepin Avenue, P.O. Box 291, Minneapolis, Minnesota 55480-0291:

1. North Country Financial Corporation, Manistique, Michigan (formerly known as First Manistique Corporation); to acquire 62.5 percent of the voting shares of North Country Bank-Southwest, Scottsdale, Arizona, a *de novo* bank.

Board of Governors of the Federal Reserve System, May 1, 1998.

Jennifer J. Johnson,

Deputy Secretary of the Board.

[FR Doc. 98–12083 Filed 5–6–98; 8:45 am]

BILLING CODE 6210–01–F

DEPARTMENT OF HEALTH AND HUMAN SERVICES

Agency for Health Care Policy and Research

Contract Review Meeting

In accordance with section 10(a) of the Federal Advisory Committee Act (5 U.S.C. Appendix 2), announcement is made of the following technical review committee to meet during the month of May 1998:

Name: Technical Review Committee on the Agency for Health Care Policy and Research SBIR Topic 1000—Assisting Purchasers to Use Information on Health Plan Performance.

Date and Time: May 18, 1998, 8:30 a.m.–5 p.m.

Place: Ramada Inn, 8400 Wisconsin Avenue, Conference Room: TBA, Bethesda, Maryland 20814.

This meeting will be closed to the public.

Purpose: The Technical Review Committee's charge is to provide, on behalf of the Agency for Health Care Policy and Research (AHCPR) Contracts Review Committee, recommendations to the Administrator, AHCPR, regarding the technical merit of contract proposals submitted in response to a specific Request for Proposals regarding the AHCPR Research Topic 1000, SBIR—Assisting Purchasers to Use Information on Health Plan Performance, that was published in the Commerce Business Daily on January 20, 1998.

The purpose of these contracts is to study and identify the information about health care plan quality and performance needed by purchasers and to consider if the information required varies by type and size of purchasers: e.g. individual vs. corporate consumers (large and small). In Phase I of the SBIR program, contractors are to examine, evaluate, and report on the scientific, technical and commercial merit and feasibility of a proposed research or R&D plan related to the above-described topic. Reported findings under Phase I will be considered in determining the availability of funds for the proposed research or research and development as Phase II.

Agenda: The Committee meeting will be devoted entirely to the technical review and evaluation of contract proposals submitted in response to the above-referenced Request for Proposals.

The Administrator, AHCPR, has made a formal determination that this meeting will not be open to the public. This action is necessary to safeguard confidential proprietary information and personal information concerning individuals associated with the proposals that may be revealed during this meeting, and to protect the free exchange of views, and avoid undue interference with Committee and Department operations. This is in accordance with section 10(d) of the Federal Advisory Committee Act, 5 U.S.C., Appendix 2, implementing regulations, 41 CFR 101–6.1023 and procurement regulations, 48 CFR 315.604(d).

Anyone wishing to obtain information regarding this meeting should contact Sandra

Robinson, Center for Quality Measurement & Improvement, Agency of Health Care Policy and Research, 2101 East Jefferson Street, Suite 501, Rockville, Maryland 20852, telephone (301) 594–1349.

Dated: April 30, 1998.

John M. Eisenberg,

Administrator.

[FR Doc. 98–12051 Filed 5–6–98; 8:45 am]

BILLING CODE 4160–90–M

DEPARTMENT OF HEALTH AND HUMAN SERVICES

Agency for Health Care Policy and Research

Contract Review Meeting

In accordance with section 10(a) of the Federal Advisory Committee Act (5 U.S.C. Appendix 2), announcement is made of the following technical review committee to meet during the month of May 1998:

Name: Technical Review Committee on the Agency for Health Care Policy and Research SBIR Topic 2000—Assisting Chronic Care Management.

Date and Time: May 15, 1998, 8 a.m.–5 p.m.

Place: DoubleTree Hotel, 1750 Rockville Pike, Conference Room: TBA, Rockville, Maryland 20852.

This meeting will be closed to the public.

Purpose: The Technical Review Committee's charge is to provide, on behalf of the Agency for Health Care Policy and Research (AHCPR) Contracts Review Committee, recommendations to the Administrator, AHCPR, regarding the technical merit of contract proposals submitted in response to a specific Request for Proposals regarding the AHCRP Research Topic 2000, SBIR—Assisting Chronic Care Management, that was published in the Commerce Business Daily on January 20, 1998.

The purpose of these contracts is to study and determine factors important in self care of chronic disease, and the role these factors play in determining the categories of skills and information needed for chronic care management and whether the kinds of information needed differs by population groups. In Phase I of the SBIR program, contractors are to examine, evaluate, and report on the scientific,technical and commercial merit and feasibility of a proposed research or R&D plan related to the above-described topic. Reported findings under Phase I will be considered in determining the availability of funds for the proposed research or research and development as Phase II.

Agenda: The Committee meeting will be devoted entirely to the technical review and evaluation of contract proposals submitted in response to the above-reference Request for Proposals.

The Administrator, AHCPR, has made a formal determination that this meeting will not be open to the public. This action is necessary to safeguard confidential proprietary information and personal information concerning individuals associated with the proposals that may be revealed during this meeting, and to protect the free exchange of views, and avoid undue interference with Committee and Department operations.

This is in accordance with section 10(d) of the Federal Advisory Committee Act, 5 U.S.C., Appendix 2, implementing regulations, 41 CFR 101–6.1023 and procurement regulations, 48 CFR 315.604(d).

Anyone wishing to obtain information regarding this meeting should contact Sandra Robinson, Center for Quality Measurement & Improvement, Agency for Health Care Policy and Research, 2101 East Jefferson Street, Suite 501, Rockville, Maryland 20852, telephone (301) 594–1349.

Dated: April 30, 1998.

John M. Eisenberg,

Administrator.

[FR Doc. 98–12052 Filed 5–6–98; 8:45 am]

BILLING CODE 4160–90–M

DEPARTMENT OF HEALTH AND HUMAN SERVICES

Administration for Children and Families

Proposed Project: Early Head Start Evaluation.

OMB No: New Request.

Description: The Head Start Reauthorization Act of 1994 established a special initiative creating funding for services for families with infants and toddlers. In response the Administration on Children, Youth and Families (ACYF) designed the Early Head Start (EHS) program. In September 1995, ACYF awarded grants to 68 local programs to serve families with infants and toddlers. ACYF has subsequently awarded grants to an additional 107 local programs, for a total of 175 EHS programs.

EHS programs are designed to produce outcomes in four domains: (1) Child development, (2) family development, (3) staff development, and (4) community development. The Reauthorization required that this new initiative be evaluated. To study the effect of the initiative, ACYF awarded a contract through a competitive procurement to Mathematica Policy Research, Inc. (MPR) with a subcontract to Columbia University's Center for Young Children and Families. The evaluation will be carried out from October 1, 1995 through September 30, 2000. Data collection activities that are the subject of this **Federal Register** notice are intended for the third and final phase of the EHS evaluation.

The sample for the child and family assessments will be approximately 3,000 families who include a pregnant woman or a child under 12 months of age, in 17 EHS study sites. Each family will be randomly assigned to a treatment group or a control group. The sample for the child care assessments will include the primary child care provider for the focal child in each of the 3,000 study sample families. The surveys and assessments will be conducted through computer-assisted telephone and personal interviewing, pencil and paper self-administered questionnaires, structured observations and videotaping. All data collection instruments have been designed to minimize the burden on respondents by minimizing interviewing and assessment time. Participation in the study is voluntary and confidential.

The information will be used by government managers, Congress and others to identify the features and evaluate the effectiveness of the EHS program.

Respondents: Applicants to the Early Head Start program and child care providers for Early Head Start families and control group families.

Annual Burden Estimates:

Instrument	Number of respondents	Number of responses per respondent	Average burden hours per response	Total burden hours
36-Month Parent Interview, Child Assessment, and Videotaping Protocol	576	1	2.0	1,152
Child Care Provider Interview:				
Child Care Centers:				
Center Directors	161	1	.25	40
Direct Provider	161	1	.17	27
Classroom Staff	161	1	.17	27
Family Child Care Providers	40	1	.5	20

Instrument	Number of respondents	Number of responses per respondent	Average burden hours per response	Total burden hours
Family Provider Assistants	9	1	.17	1
Relative Care Providers	113	1	.5	57
Relative Provider Assistants	25	1	.17	4
Child Care Provider Observation Protocol:				
Child Care Centers:				
Family Child Care Providers	161	1	2	321
Relative Care Providers	40	1	2	79
	113	1	2	227
Staff Questionnaire	190	1	1	190
Estimated Total Annual Burden Hours				2,146

In compliance with the requirements of section 3506(c)(2)(A) of the Paperwork Reduction Act of 1995, the Administration for Children and Families is soliciting comment on the specific aspects of the information collection described above. Copies of the proposed collection of information can be obtained by writing to The Administration for Children and Families, Office of Information Services, Division of Information Resource Management, 370 L'Enfant Promenade, SW., Washington, DC 20047, Attn.: ACF Reports Clearance Officer. All requests should be identified by title.

Comments are invited on: (a) Whether the proposed collection of information is necessary for the proper performance of the functions of the agency, including whether the information shall have practical utility; (b) the accuracy of the agency's estimate of the burden of the proposed collection of information; (c) ways to enhance to quality, utility, and clarity of the information to be collected; and (d) ways to minimize the burden of the collection of information on respondents, including through the use of automated collection techniques or other forms of information technology. Consideration will be given to comments and suggestions submitted on or before July 6, 1998.

Dated April 30, 1998.

Bob Sargis,

Acting Reports Clearance Officer.

[FR Doc. 98–12085 Filed 5–6–98; 8:45 am]

BILLING CODE 4150–04–M

DEPARTMENT OF HEALTH AND HUMAN SERVICES

Food and Drug Administration

[Docket No. 98F–0291]

Asahi Denka Kogyo K.K.; Filing of Food Additive Petition

AGENCY: Food and Drug Administration, HHS.

ACTION: Notice.

SUMMARY: The Food and Drug Administration (FDA) is announcing that Asahi Denka Kogyo K.K., has filed a petition proposing that the food additive regulations be amended to provide for the expanded safe use of sodium 2,2′-methylenebis(4,6-di-*tert*-butylphenyl)phosphate as a clarifying agent in olefin polymers intended for use in contact with food.

FOR FURTHER INFORMATION CONTACT: Vir D. Anand, Center for Food Safety and Applied Nutrition (HFS–216), Food and Drug Administration, 200 C St. SW., Washington, DC 20204, 202–418–3081.

SUPPLEMENTARY INFORMATION: Under the Federal Food, Drug, and Cosmetic Act (sec. 409(b)(5) (21 U.S.C. 348(b)(5))), notice is given that a food additive petition (FAP 8B4592) has been filed by Asahi Denka Kogyo K.K., 5–2–13, Shirahata, Urawa City, Saitama 336, Japan. The petition proposes to amend the food additive regulations in § 178.3295 *Clarifying agents for polymers* (21 CFR 178.3295) to provide for the expanded safe use of sodium 2,2′-methylenebis(4,6-di-*tert*-butylphenyl)phosphate as a clarifying agent in olefin polymers intended for use in contact with food.

The agency has determined under 21 CFR 25.32(i) that this action is of the type that does not individually or cumulatively have a significant effect on the human environment. Therefore, neither an environmental assessment nor an environmental impact statement is required.

Dated: April 24, 1998.

Laura M. Tarantino,

Office of Premarket Approval, Center for Food Safety and Applied Nutrition.

[FR Doc. 98–12117 Filed 5–6–98; 8:45 am]

BILLING CODE 4160–01–F

DEPARTMENT OF HEALTH AND HUMAN SERVICES

Food and Drug Administration

[Docket No. 98F–0290]

The Dow Chemical Company; Filing of Food Additive Petition

AGENCY: Food and Drug Administration, HHS.

ACTION: Notice.

SUMMARY: The Food and Drug Administration (FDA) is announcing that The Dow Chemical Co., has filed a petition proposing that the food additive regulations be amended to provide for the safe use of certain olefin basic copolymers, derived from ethylene and alpha monomers with eight or fewer carbon atoms, as articles or as components of articles intended for use in contact with food.

DATES: Written comments on the petitioner's environmental assessment by June 8, 1998.

ADDRESSES: Submit written comments to the Dockets Management Branch (HFA–305), Food and Drug Administration, 12420 Parklawn Dr., rm. 1–23, Rockville, MD 20857.

FOR FURTHER INFORMATION CONTACT: Hortense S. Macon, Center for Food Safety and Applied Nutrition (HFS–205), Food and Drug Administration, 200 C St. SW., Washington, DC 20204, 202–418–3086.

SUPPLEMENTARY INFORMATION: Under the Federal Food, Drug, and Cosmetic Act (sec. 409(b)(5) (21 U.S.C. 348(b)(5))), notice is given that a food additive petition (FAP 8B4586) has been filed by the Dow Chemical Co., 2030 Dow Center, Midland, MI 48674. The petition proposes to amend the food additive regulations in § 177.1520 Olefin polymers (21 CFR 177.1520) to provide for the safe use of certain olefin basic copolymers derived from ethylene and alpha olefin monomers with eight or fewer carbon atoms, as articles or as

components of articles intended for use in contact with food.

The potential environmental impact of this action is being reviewed. To encourage public participation consistent with regulations promulgated under the National Environmental Policy Act (40 CFR 1501.4(b)), the agency is placing the environmental assessment submitted with the petition that is the subject of this notice on public display at the Dockets Management Branch (address above) for public review and comment. Interested persons may, on or before June 8, 1998, submit to the Dockets Management Branch (address above) written comments. Two copies of any comments are to be submitted, except that individuals may submit one copy. Comments are to be identified with the docket number found in brackets in the heading of this document. Received comments may be seen in the office above between 9 a.m. and 4 p.m., Monday through Friday. FDA will also place on public display any amendments to, or comments on, the petitioner's environmental assessment without further announcement in the **Federal Register**. If, based on its review, the agency finds that an environmental impact statement is not required and this petition results in a regulation, the notice of availability of the agency's finding of no significant impact and the evidence supporting that finding will be published with the regulation in the **Federal Register** in accordance with 21 CFR 25.40(c).

Dated: April 24, 1998.

Laura M. Tarantino,

Acting Director, Office of Premarket Approval, Center for Food Safety and Applied Nutrition.

[FR Doc. 98–12169 Filed 5–6–98; 8:45 am]

BILLING CODE 4160–01–F

DEPARTMENT OF HEALTH AND HUMAN SERVICES

Food and Drug Administration

[Docket No. 98F–0288]

Mitsui Chemicals, Inc.; Filing of Food Additive Petition

AGENCY: Food and Drug Administration, HHS.

ACTION: Notice.

SUMMARY: The Food and Drug Administration (FDA) is announcing that Mitsui Chemicals, Inc., has filed a petition proposing that the food additive regulations be amended to expand the safe use of propylene/butene-1 copolymers containing greater than 15 but not more than 35 weight percent of polymer units derived from butene-1 for use in contact with food.

DATES: Written comments on the petitioner's environmental assessment by June 8, 1998.

ADDRESSES: Submit written comments to the Dockets Management Branch (HFA–305), Food and Drug Administration, 12420 Parklawn Dr., rm. 1–23, Rockville, MD 20857.

FOR FURTHER INFORMATION CONTACT: Julius Smith, Center for Food Safety and Applied Nutrition (HFS–215), Food and Drug Administration, 200 C St. SW., Washington, DC 20204, 202–418–3091.

SUPPLEMENTARY INFORMATION: Under the Federal Food, Drug, and Cosmetic Act (sec. 409(b)(5) (21 U.S.C. 348(b)(5))), notice is given that a food additive petition (FAP 8B4590) has been filed by Mitsui Chemicals, Inc., c/o Keller & Heckman, 1001 G St. NW., suite 500 West, Washington, DC 20001. The petition proposes to amend the food additive regulations in § 177.1520 *Olefin polymers* (21 CFR 177.1520) to expand the safe use of propylene/butene-1 copolymers containing greater than 15 but not more than 35 weight percent of polymer units derived from butene-1 for use in contact with food.

The potential environmental impact of this action is being reviewed. To encourage public participation consistent with regulations promulgated under the National Environmental Policy Act (40 CFR 1501.4(b)), the agency is placing the environmental assessment submitted with the petition that is the subject of this notice on public display at the Dockets Management Branch (address above) for public review and comment. Interested persons may, on or before June 8, 1998, submit to the Dockets Management Branch (address above) written comments. Two copies of any comments are to be submitted, except that individuals may submit one copy. Comments are to be identified with the docket number found in brackets in the heading of this document. Received comments may be seen in the office above between 9 a.m. and 4 p.m., Monday through Friday. FDA will also place on public display any amendments to, or comments on, the petitioner's environmental assessment without further announcement in the **Federal Register**. If, based on its review, the agency finds that an environmental impact statement is not required and this petition results in a regulation, the notice of availability of the agency's finding of no significant impact and the evidence supporting that finding will be published with the regulation in the **Federal Register** in accordance with 21 CFR 25.40(c).

Dated: April 24, 1998.

Laura M. Tarantino,

Acting Director, Office of Premarket Approval, Center for Food Safety and Applied Nutrition.

[FR Doc. 98–12168 Filed 5–6–98; 8:45 am]

BILLING CODE 4160–01–F

DEPARTMENT OF HEALTH AND HUMAN SERVICES

Food and Drug Administration

[Docket No. 81G–0035]

Dairy Crest Food, Ltd.; Withdrawal of GRAS Affirmation Petition

AGENCY: Food and Drug Administration, HHS.

ACTION: Notice.

SUMMARY: The Food and Drug Administration (FDA) is announcing the withdrawal, without prejudice to a future filing, of a petition (GRASP 1G0273) proposing that the use of immobilized lactase composite is generally recognized as safe (GRAS) for use in the production of low-lactose whey.

FOR FURTHER INFORMATION CONTACT: Valerie M. Davis, Center for Food Safety and Applied Nutrition (HFS–206), Food and Drug Administration, 200 C St. SW., Washington, DC 20204, 202–418–3181.

SUPPLEMENTARY INFORMATION: In a notice published in the **Federal Register** of March 3, 1981 (46 FR 14970), FDA announced that a petition (GRASP 1G0273) had been filed by Corning Glass Works, Corning, NY. The petition proposed affirmation that the use of immobilized lactase composite is GRAS for producing low-lactose whey.

In a letter dated January 8, 1988, a law firm, on behalf of Corning Glass Works, informed the agency that sponsorship of the petition was transferred to Dairy Crest Food, Ltd., Dairy Crest House, Portsmouth Rd., Surbiton, Surrey KT6 5QL, England.

On May 29, 1996, the agency contacted the attorney of record for Dairy Crest Foods, Ltd., and inquired whether Dairy Crest Foods, Ltd., was still pursuing the petition, given that the last communication from the petitioner was 5 years previously. This inquiry was prompted by an agency initiative to remove those petitions that are no longer being pursued from FDA's petition inventory. No response was received.

By letter of May 29, 1997, FDA again contacted Dairy Crest Food, Ltd.'s,

attorney to reiterate the agency's initiative to remove from its pending petition inventory those petitions that are no longer being pursued by the petitioner. In that letter, the agency stated that if Dairy Crest Foods, Ltd., wished to pursue the petition, the agency would continue to work on it. However, if Dairy Crest Food, Ltd., did not wish to pursue the petition, the agency requested that Dairy Crest Food, Ltd., withdraw the petition without prejudice to a future filing. FDA asked that the petitioner inform the agency of its decision within 30 days of the date of the letter; the agency added that failure to respond within that time would be considered approval to withdraw the petition. As of this date, Dairy Crest Food, Ltd., has not responded to FDA in any way. Therefore, the agency is announcing that it considers this petition to be withdrawn by the firm, without prejudice to a future filing (21 CFR 171.7).

Dated: April 27, 1998.

William K. Hubbard,

Associate Commissioner for Policy Coordination.

[FR Doc. 98–12055 Filed 5–6–98; 8:45 am]

BILLING CODE 4160–01–F

DEPARTMENT OF HEALTH AND HUMAN SERVICES

Food and Drug Administration

Ophthalmic Devices Panel of the Medical Devices Advisory Committee; Notice of Meeting

AGENCY: Food and Drug Administration, HHS.

ACTION: Notice.

This notice announces a forthcoming meeting of a public advisory committee of the Food and Drug Administration (FDA). The meeting will be open to the public.

Name of Committee: Ophthalmic Devices Panel of the Medical Devices Advisory Committee.

General Function of the Committee: To provide advice and recommendations to the agency on FDA regulatory issues.

Date and Time: The meeting will be held on June 5, 1998, 9 a.m. to 5 p.m.

Location: Corporate Bldg., conference room 020B, 9200 Corporate Blvd., Rockville, MD.

Contact Person: Sara M. Thornton, Center for Devices and Radiological Health (HFZ–460), Food and Drug Administration, 9200 Corporate Blvd., Rockville, MD 20850, 301–594–2053, or FDA Advisory Committee Information Line, 1–800–741–8138 (301–443–0572 in the Washington, DC area), code 12396, or the World Wide Web (WWW) at http://www.fda.gov. Please call the Information Line for up-to-date information on this meeting.

Agenda: The committee will discuss, make recommendations, and vote on a premarket approval application (PMA) for an excimer laser for the correction of myopia using laser in-situ keratomileusis. FDA staff will present to the committee the clinical requirements section of the proposed International Standards Organization standard for ophthalmic viscosurgical devices.

Procedure: Interested persons may present data, information, or views, orally or in writing, on issues pending before the committee. Written submissions may be made to the contact person by May 29, 1998. Oral presentations from the public will be scheduled between approximately 9:30 a.m. and 10 a.m., and between approximately 1 p.m. and 1:30 p.m. An additional 30-minute time period will be given for public comment at the end of the panel discussion on the PMA. Time allotted for each presentation may be limited. Those desiring to make formal oral presentations should notify the contact person before May 29, 1998, and submit a brief statement of the general nature of the evidence or arguments they wish to present, the names and addresses of proposed participants, and an indication of the approximate time requested to make their presentation.

Notice of this meeting is given under the Federal Advisory Committee Act (5 U.S.C. app. 2).

Dated: April 30, 1998.

Michael A. Friedman,

Deputy Commissioner for Operations.

[FR Doc. 98–12170 Filed 5–6–98; 8:45 am]

BILLING CODE 4160–01–F

DEPARTMENT OF HEALTH AND HUMAN SERVICES

Health Care Financing Administration

[Document Identifier: HCFA–2567–A]

Agency Information Collection Activities: Proposed Collection; Comment Request

AGENCY: Health Care Financing Administration, HHS.

In compliance with the requirement of section 3506(c)(2)(A) of the Paperwork Reduction Act of 1995, the Health Care Financing Administration (HCFA), Department of Health and Human Services, is publishing the following summary of proposed collections for public comment. Interested persons are invited to send comments regarding this burden estimate or any other aspect of this collection of information, including any of the following subjects: (1) The necessity and utility of the proposed information collection for the proper performance of the agency's functions; (2) the accuracy of the estimated burden; (3) ways to enhance the quality, utility, and clarity of the information to be collected; and (4) the use of automated collection techniques or other forms of information technology to minimize the information collection burden.

Type of Information Collection Request: Extension of a currently approved collection; *Title of Information Collection:* Statement of Deficiencies and Plan of Correction and Supporting Regulations in 42 CFR 486.301–.325; *Form No.:* HCFA–2567–A (OMB# 0938–0391); *Use:* This Paperwork package provides information regarding deficiencies for Organ Procurement Organizations (OPO) as well as deficiencies noted during periodic facility and laboratory certification surveys. This information is used to make decisions concerning OPO redesignation, certification/recertification of health care facilities participating in the Medicare/Medicaid Programs, and laboratories regulated by the Clinical Laboratory Improvement Amendments; *Frequency:* Biennially and Annually; *Affected Public:* Business or other for-profit, not-for-profit institutions, Federal Government, and State, local or tribal government; *Number of Respondents:* 49,200; *Total Annual Responses:* 98,400; *Total Annual Hours:* 196,800.

To obtain copies of the supporting statement and any related forms for the proposed paperwork collections referenced above, access HCFA's Web Site address at http://www.hcfa.gov/regs/prdact95.htm, or E-mail your request, including your address, phone number, OMB number, and HCFA document identifier, to Paperwork@hcfa.gov, or call the Reports Clearance Office on (410) 786–1326. Written comments and recommendations for the proposed information collections must be mailed within 60 days of this notice directly to the HCFA Paperwork Clearance Officer designated at the following address: HCFA, Office of Information Services, Information Technology Investment Management Group, Division of HCFA Enterprise Standards, Attention: Louis Blank, Room C2–26–17, 7500 Security

Boulevard, Baltimore, Maryland 21244–1850.

Dated: April 28, 1998.

John P. Burke III,

HCFA Reports Clearance Officer, HCFA Office of Information Services, Information Technology Investment Management Group, Division of HCFA Enterprise Standards.

[FR Doc. 98–12092 Filed 5–6–98; 8:45 am]

BILLING CODE 4120–03–P

DEPARTMENT OF HEALTH AND HUMAN SERVICES

Health Care Financing Administration

[Document Identifier: HCFA–116, HCFA–R–148, and HCFA–R–231]

Agency Information Collection Activities: Proposed Collection; Comment Request

AGENCY: Health Care Financing Administration, HHS.

In compliance with the requirement of section 3506(c)(2)(A) of the Paperwork Reduction Act of 1995, the Health Care Financing Administration (HCFA), Department of Health and Human Services, is publishing the following summary of proposed collections for public comment. Interested persons are invited to send comments regarding this burden estimate or any other aspect of this collection of information, including any of the following subjects: (1) The necessity and utility of the proposed information collection for the proper performance of the agency's functions; (2) the accuracy of the estimated burden; (3) ways to enhance the quality, utility, and clarity of the information to be collected; and (4) the use of automated collection techniques or other forms of information technology to minimize the information collection burden.

1. *Type of Information Collection Request:* Revision of a currently approved collection; *Title of Information Collection:* Clinical Laboratory Improvement Amendments (CLIA) Application Form and Supporting Regulations in 42 CFR 493.1–.2001; *Form No.:* HCFA–116 (OMB# 0938–0581); *Use:* These certification requirements have been established for any entity that performs testing on human beings for diagnostic or treatment purposes. If a laboratory conducts relatively simple tests that are categorized as waived or provider performed microscopy test procedures (PPMP), it must obtain a certificate of waiver or certificate of PPMP. If the laboratory conducts any tests outside of these two categories, it must apply for a certificate of compliance or certificate of accreditation and initially obtain a registration certificate. These certificates ensure that laboratories are in compliance with CLIA.; *Frequency:* Biennially; *Affected Public:* Business or other for profit, not for profit institutions, Federal Government, and State, local or tribal government; *Number of Respondents:* 16,000; *Total Annual Responses:* 16,000; *Total Annual Hours:* 20,000.

2. *Type of Information Collection Request:* Extension of a currently approved collection; *Title of Information Collection:* Limitation on Provider-Related Donations and Health Care-Related Taxes; Limitations on Payments to Disproportionate Share Hospitals; Medicaid and Supporting Regulations in 42 CFR 433.68, 433.74, 447.74 and 447.272; *Form No.:* HCFA–R–148 (OMB# 0938–0618); *Use:* These information collection requirements specify limitations on the amount of Federal financial participation available for medical assistance expenditures in a fiscal year. States receive donated funds from providers and revenues are generated by health care related taxes. These donations and revenues are used to fund medical assistance programs.; *Frequency:* Quarterly; *Affected Public:* State, Local, or Tribal Government; *Number of Respondents:* 51; *Total Annual Responses:* 51; *Total Annual Hours:* 3,892.

3. *Type of Information Request:* Revision of a currently approved collection; *Title of Information Collection:* Medicare+Choice (M+C) Providers Sponsored Organization (PSO) Waiver Request Form and Supporting Regulations in 42 CFR 422.374; *Form Number:* HCFA–R–231; *Use:* The PSO waiver request form is for use by PSO's that do not have a State risk-bearing entity license and that wish to enter into a M+C contract with HCFA to provide prepaid health care services to eligible Medicare beneficiaries. HCFA will use the information requested on this form to determine whether the applicant is eligible for a waiver of the state licensure requirement for M+C organizations as allowed under section 1855(a)(2) of the Social Security Act.; *Frequency:* One-time.; *Affected Public:* Business or other for-profit, not-for-profit institutions, and Federal Government.; *Annual Number of Respondents:* 30.; *Total Annual Responses:* 30.; *Total Annual Hours Requested:* 300.

To obtain copies of the supporting statement and any related forms for the proposed paperwork collections referenced above, access HCFA's Web Site address at http://www.hcfa.gov/regs/prdact95.htm, or E-mail your request, including your address, phone number, OMB number, and HCFA document identifier, to Paperwork@hcfa.gov, or call the Reports Clearance Office on (410) 786–1326. Written comments and recommendations for the proposed information collections must be mailed within 60 days of this notice directly to the HCFA Paperwork Clearance Officer designated at the following address: HCFA, Office of Information Services, Information Technology Investment Management Group, Division of HCFA Enterprise Standards, Attention: Louis Blank, Room C2–26–17, 7500 Security Boulevard, Baltimore, Maryland 21244–1850.

Dated: April 24, 1998.

John P. Burke III,

HCFA Reports Clearance Officer, HCFA Office of Information Services, Information Technology Investment Management Group, Division of HCFA Enterprise Standards.

[FR Doc. 98–12094 Filed 5–6–98; 8:45 am]

BILLING CODE 4120–03–P

DEPARTMENT OF HEALTH AND HUMAN SERVICES

Health Care Financing Administration

[Document Identifier: HCFA–R–235]

Agency Information Collection Activities: Proposed Collection; Comment Request

In compliance with the requirement of section 3506(c)(2)(A) of the Paperwork Reduction Act of 1995, the Health Care Financing Administration (HCFA), Department of Health and Human Services, is publishing the following summary of proposed collections for public comment. Interested persons are invited to send comments regarding the burden estimate or any other aspect of this collection of information, including any of the following subjects: (1) the necessity and utility of the proposed information collection for the proper performance of the agency's functions; (2) the accuracy of the estimated burden; (3) ways to enhance the quality, utility, and clarity of the information to be collected; and (4) the use of automated collection techniques or other forms of information technology to minimize the information collection burden.

Type of Information Collection Request: New Collection; *Title of Information Collection:* Data Use Agreement Information Collection Requirements, model agreement, and Supporting regulations; *Form No.:*

HCFA–R–235; *Use:* The agreement addresses the conditions under which HCFA will disclose and the User will maintain HCFA data that are protected by the Privacy Act of 1974, 552a. *Frequency:* On occasion; *Affected Public:* Business of other for-profit, Not-for-profit institutions; *Number of Respondents:* 1,500; *Total Annual Responses:* 1,500; *Total Annual Hours:* 750.

To obtain copies of the supporting statement for the proposed paperwork collections referenced above, or any related forms, E-mail your request, including your address and phone number, to Paperwork@hcfa.gov, or call the Reports Clearance Office on (410) 786–1326. Written comments and recommendations for the proposed information collections must be mailed within 60 days of this notice directly to the HCFA Paperwork Clearance Officer designated at the following address: HCFA, Office of Information Services, Information Technology Investment Management Group, Division of HCFA Enterprise Standards, Attention: John Rudolph, Room C2–26–17, 7500 Security Boulevard, Baltimore, Maryland 21244–1850.

Dated: April 30, 1998.

John P. Burke III,

HCFA Reports Clearance Officer, Division of HCFA Enterprise Standards, Health Care Financing Administration.

[FR Doc. 98–12160 Filed 5–6–98; 8:45 am]

BILLING CODE 4120–03–P

DEPARTMENT OF HEALTH AND HUMAN SERVICES

Health Care Financing Administration

Announcement of Office of Management and Budget (OMB) Control Numbers for Agency Information Collections Approved Under the Paperwork Reduction Act of 1995

AGENCY: Health Care Financing Administration, HHS.

This notice announces and displays OMB control numbers for Health Care Financing Administration (HCFA) information collections that have been approved by OMB.

Under OMB's regulations implementing the Paperwork Reduction Act (PRA), 44 U.S.C. 3501, each agency that proposes to collect information must submit its proposal for OMB review and approval in accordance with 5 CFR Part 1320. Once OMB has approved an agency's proposed collection of information and issues a control number, the agency must display the control number.

OMB regulations provide for alternative methods of displaying OMB control numbers. In the case of collections of information published in regulations, display is to be ''provided in a manner that is reasonably calculated to inform the public.'' To meet this requirement an agency may display such information in the **Federal Register** by publishing such information in the preamble or the regulatory text, or in a technical amendment to the regulation, or in a separate notice announcing OMB approval of the collection of information.

To comply with this requirement HCFA has chosen to publish this notice announcing OMB approval of the collections of information published in regulations. As stated above, this notice announces and displays the assigned OMB control numbers for HCFA's information collections that have been approved by OMB.

	OMB control Nos.
42 CFR :	
403.210	0938–0640.
405.262	0938–0267.
405.374	0938–0270.
405.427	0938–0155.
405.711	0938–0045.
405.807	0938–0033.
405.821	0938–0034.
405.1632	0938–0454.
405.1701–.1726	0938–0273.
405.2100–.2171	0938–0386.
405.2110, 405.2112	0938–0657 and 0658.
405.2133	0938–0046 and 0447 and 0448.
405.2135–.2171	0938–0360.
405.2401	0938–0685.
406.13	0938–0080.
406.15	0938–0501.
406.28, 407.27	0938–0025.
407.10, 407.11	0938–0245.
407.18	0938–0679.
407.40	0938–0035.
408.6	0938–0041.
409.40–.50	0938–0357.
410.1	0938–0679.
410.36	0938–0357.
410.38	0938–0534.
410.40	0938–0042 and 0685.
410.69	0938–0685.
410.170	0938–0357.
411.4–.15	0938–0357.
411.15	0938–0224 and 0357.
411.20–411.206	0938–0565.
411.372, 411.373, 411.378	0938–0714.
411.404, 411.406	0938–0465.
411.408	0938–0566.
412.20–.32	0938–0358.
412.40–.62	0938–0359.

	OMB control Nos.
412.44, 412.46	0938–0445.
412.92	0938–0477.
412.105	0938–0456.
412.106	0938–0691.
412.116	0938–0269.
412.256	0938–0573.
413.13	0938–0463.
413.16	0938–0583.
413.17, 413.20	0938–0202.
413.20, 413.24	0938–0022 and 0037 and 0050 and 0102 and 0107 and 0301 and 0463 and 0511.
413.56	0938–0463.
413.64	0938–0269.
413.157	0938–0463.
413.170	0938–0296.
413.198, 413.200	0938–0236.
414.40	0938–0008.
414.330	0938–0372.
414.451, 414.452, 414.456, 414.460	0938–0685.
416.43	0938–0506.
416.47	0938–0266 and 0506.
417.1–.106	0938–0469.
417.124	0938–0472.
417.126	0938–0701.
417.143	0938–0470.
417.162	0938–0469.
417.408	0938–0470.
417.436.	0938–0610.
417.470	0938–0701.
417.479, 417.500	0938–0700.
417.801	0938–0610.
418.22, 418.24, 418.28, 418.30, 418.56, 418.58, 418.70, 418.74, 418.80, 418.83, 418.96, 418.100	0938–0302.
420.200–.206	0938–0086.
421.100	0938–0357.
422.430	0938–0390.
424.5	0938–0534.
424.20.	0938–0454.
424.22	0938–0357 and 0489.
424.32	0938–0008.
424.57	0938–0685.
424.73	0938–0685.
424.123	0938–0484.
424.124	0938–0042.
430.10–.20	0938–0193.
430.12	0938–0610 and 0673.
431.20	0938–0610.
431.1–431.865	0938–0062.
431.17	0938–0467.
431.110	0938–0390.
431.107	0938–0610.
431.306	0938–0502.
431.630	0938–0445.
431.800	0938–0094 and 0300.
431.802–.822	0938–0246.
431.814	0938–0146 and 0147.
431.820	0938–0144.
431.865	0938–0094 and 0246.
431.940–431.965	0938–0467.
433.68, 433.74	0938–0618.
433.110–.131	0938–0487.
433.110, 433.112–433.114, 433.116, 433.117, 433.119, 433.121, 433.122, 433.127, 433.130, 433.131	0938–0247.
433.138	0938–0502.
433.139	0938–0502.
434.27	0938–0572.
434.28	0938–0610.
434.44, 434.67, 434.70	0938–0700.
435.1–435.1011	0938–0062.
435.217, 435.726, 435.735	0938–0449.
435.940–.965	0938–0467.
440.1–.270	0938–0062.
440.10	0938–0449.
440.30	0938–0685.

	OMB control Nos.
440.167	0938–0193.
440.180	0938–0272.
441.16	0938–0713.
441.250–.300	0938–0481.
441.300–.305	0938–0272.
441.302	0938–0449.
442.1–.119	0938–0062 and 0379.
442.10–.119	0938–0355.
442.30	0938–0678.
447.31	0938–0287.
447.53	0938–0429.
447.253	0938–0523.
447.272	0938–0618.
447.280	0938–0624.
447.299	0938–0618.
447.500–.542	0938–0676.
447.550	0938–0676.
455.100–.106	0938–0086.
456.650–.657	0938–0061.
456.654	0938–0445.
456.700, 456.705, 456.709, 456.711, 456.712	0938–0659.
466.71, 466.73, 466.74, 466.78, 466.80, 466.94	0938–0445.
473.18, 473.34, 473.36, 473.42	0938–0443.
476.104, 476.105, 476.116, 476.134	0938–0426.
482.1–.66.	0938–0380.
482.2–.57	0938–0382.
482.12, 482.22	0938–0328.
482.27	0938–0328 and 0698.
482.41	0938–0242.
482.30, 482.41, 482.43, 482.53, 482.56, 482.57, 482.60–.62	0938–0328 and 0378.
482.66	0938–0328 and 0624.
483.10	0938–0610.
483.70	0938–0242.
483.400–.480	0938–0062 and 0678.
483.470	0938–0242.
484.1–.52	0938–0365.
484.10	0938–0610.
484.18	0938–0357.
484.48	0938–0519.
484.52	0938–0687.
485.56, 485.58, 485.60, 485.64, 485.66	0938–0267.
485.701–.729	0938–0273 and 0065.
485.709, 485.711, 485.717, 485.719, 485.721, 487.723, 485.725, 485.727, 485.729	0938–0336.
486.100–.110	0938–0338.
486.150–.163	0938–0258 and 0071.
486.155, 486.161, 486.163	0938–0336.
486.301–.325.	0938–0391, 0512 and 0688.
488.1–.28	0938–0355.
488.4	0938–0690.
488.18	0938–0667.
488.26	0938–0379.
488.60	0938–0360.
489.20	0938–0667.
489.21	0938–0357.
489.24	0938–0667.
489.27	0938–0692.
489.28	0938–0713.
489.40–.41	0938–0383.
489.66, 489.67	0938–0713.
489.102	0938–0610.
491.1–.11	0938–0074.
491.2	0938–0685.
491.9	0938–0334.
493.1–.2001	0938–0151, 0170, 0544, 0581, 0612 and 0653.
493.501, 493.506, 493.513, 493.515	0938–0686.
493.1840	0938–0655.
498.40–.95	0938–0486 and 0567.
1003.100, 1003.101, 1003.103	0938–0700.
1004.40, 1004.50, 1004.60, 1004.70	0938–0444.
45 CFR:	
96.70–.74	0938–0481.
146.111, .115, .117, .150, .152, .160, .180	0938–0702.

	OMB control Nos.
148.120, .122, .124, .128	0938–0703.

Dated: April 28, 1998.

John P. Burke III,

HCFA Reports Clearance Officer, HCFA Office of Information Services, Information Technology Investment Management Group, Division of HCFA Enterprise Standards.

[FR Doc. 98–12095 Filed 5–6–98; 8:45 am]

BILLING CODE 4120–03–P

DEPARTMENT OF HEALTH AND HUMAN SERVICES

National Institutes of Health

National Cancer Institute: VHL and MET Mutation Detection Technology: Opportunities for Cooperative Research and Development Agreements (CRADAs) for the Joint Evaluation and Development of Methods to Detect Mutation in Both Gene Sequences Using Nucleic Acid Array Technology

The methods may include but are not limited to spectroscopic partitioning techniques and DNA chip technology. The NCI is looking for multiple CRADA Collaborators to develop independently different aspects of this VHL and MET mutation detection technology.

AGENCY: National Cancer Institute, National Institutes of Health, PHS, DHHS.

ACTION: Notice for CRADA Opportunities.

SUMMARY: Pursuant to Federal Technology Transfer Act of 1986 (FTTA, 15 U.S.C. 3710; and Executive Order 12591 of April 10, 1987, as amended by the National Technology Transfer and Advancement Act of 1995), the National Cancer Institute (NCI) of the National Institutes of Health (NIH) of the Public Health Service (PHS) of the Department of Health and Human Services (DHHS) seeks Cooperative Research and Development Agreements (CRADAs) with pharmaceutical or biotechnology companies to evaluate and develop methods to detect mutations in both the MET and VHL gene sequences using nucleic acid array technology. Any CRADA for the biomedical use of this technology will be considered. The CRADAs would have an expected duration of one (1) to five (5) years. The goals of the CRADAs include the rapid publications of research results and timely commercialization of products, diagnostics and treatments that result from the research. The CRADA Collaborators will have an option to elect a non-exclusive or exclusive commercialization license to subject inventions arising under the CRADAs that are related to the DNA array technology of the collaborators, which are the subject of the CRADA Research Plan, for diagnostics and research supply and can apply for background licenses to the existing patents listed below, subject to any pre-existing licenses already issued for other fields of use. Licensing by NIH is subject to 35 U.S.C. 207 and 37 CFR Part 404.

ADDRESSES: Proposals and questions about this CRADA opportunity may be addressed to Dr. Thomas M. Stackhouse, Technology Development & Commercialization Branch, National Cancer Institute-Frederick Cancer Research & Development Center, Fairview Center, Room 502, Frederick, MD 21701 (phone: 301–846–5465, fax: 301–846–6820).

Scientitific inquiries—Dr. Berton Zbar, Chief, Laboratory of Immunobiology, National Cancer Institute-Frederick Cancer Research & Development Center, P.O. Box B, Building 560, Room 12–68, Frederick MD, 21702–1201 (phone: 301–846–1288 FAX: 301–846–6145).

EFFECTIVE DATE: Inquiries regarding licensing and scientific matters may be forwarded at any time. Confidential CRADA proposals, preferably one page or less, must be submitted to NCI on or before July 6, 1998. Guidelines for preparing full CRADA proposals will be communicated shortly thereafter to all respondents who have been selected.

SUPPLEMENTARY INFORMATION:

Technology Available

DHHS scientists have identified mutations in the proto-oncogene c-MET, and the von Hippel-Lindau disease (VHL) tumor suppressor gene in human cancers. c-MET is the receptor for hepatocyte growth factor/scatter factor. Germline mutations in the MET gene have been detected in affected members of families with an inherited predisposition to develop papillry renal carcinomas; somatic mutations in the MET gene have been detected in a subset of papillary renal carcinomas. All mutations detected in the MET gene to date were located in the tyrosine kinase domain; all mutations were missense.

The VHL gene is mutated in patients with von Hippel-Lindau disease, and in sporadic clear cell carcinomas of the kidney. Disease-causing mutations include gender deletions (partial or complete), missense and nonsense and frame shift mutations.

About 30,000 individuals develop kidney cancer each year. We anticipate that the novel mutation detection techniques for the MET and VHL genes will be used in patients with sporadic and inherited predispositions to renal cancer. Possible uses would include diagnosis and prognosis of kidney cancer. In addition, these new methods might be applied to the study of other types of human neoplasia.

DHHS now seeks collaborative arrangements for the joint evaluation and development of methods to detect mutations in both gene sequences using nucleic acid array technology. The methods may include but are not limited to spectroscopic partitioning techniques and DNA chip technology. For collaborations with the commercial sector, a Cooperative Research and Development Agreement (CRADA) will be established to provide equitable distribution of intellectual property rights developed under the CRADA. The successful CRADA partner will collaboratively develop and test known mutations within the genes from samples provided by the government. CRADA aims will include rapid publication of research results as well as full and timely exploitation of any commercial opportunities.

NCI's VHL/MET Patents and Patent Applications

1. Von Hippel-Lindau(VHL) Disease Gene and Corresponding cDNA and Methods for Detecting Carriers of the VHL Disease Gene; United States Patent 5,654,138, issued August 5, 1997.

The role of the National Cancer Institute in this CRADA will include, but not be limited to:

1. Providing intellectual, scientific, and technical expertise and experience to the research project.
2. Providing the Collaborator with samples of the subject gene sequences for evaluation.
3. Planning research studies and interpreting research results.
4. Publishing research results.

The role of the CRADA Collaborator may include, but not be limited to:

1. Providing significant intellectual, scientific, and technical expertise or experience to the research project.
2. Planning research studies and interpreting research results.

3. Providing technical expertise and/or financial support for (e.g. facilities, personnel and expertise) for CRADA-related Government activities.

4. Accomplishing objectives according to an appropriate timetable to be outlined in the CRADA Collaborator's proposal.

5. The willingness to commit best effort and demonstrated resources to the research, development and commercialization of this technology.

6. The demonstration of expertise in the commercial development, production, marketing and sales of products related to this area of technology.

8. The willingness to cooperate with the National Cancer Institute in the timely publication of research results.

9. The agreement to be bound by the appropriate DHHS regulating to human subjects, and all PHS policies relating to the use and care of laboratory animals.

10. The willingness to accept the legal provisions and language of the CRADA with only minor modifications, if any. These provisions govern the equitable distribution of patent rights to CRADA inventions.

Dated: April 26, 1998.

Kathleen Sybert,

Acting Director, Technology Development & Commercialization Branch, National Cancer Institute, National Institutes of Health.

[FR Doc. 98–12110 Filed 5–6–98; 8:45 am]

BILLING CODE 4140–01–M

DEPARTMENT OF HEALTH AND HUMAN SERVICES

National Institutes of Health

National Institute on Aging: Opportunity for a Cooperative Research and Development Agreement (CRADA) To Develop a Vaccine for Pneumonia

AGENCY: National Institutes of Health (NIH), PHS, DHHSNIA, NIH, PHS, DHHS.

ACTION: Notice.

SUMMARY: The National Institute on Aging (NIA) is seeking a Collaborator to participate in a Cooperative Research and Development Agreement (CRADA) to develop a vaccine for pneumonia. The term of the CRADA will be up to five (5) years.

ADDRESESS: Inquiries and proposals regarding this opportunity should be addressed to Bruce D. Goldstein, J.D., Technology Development and Commercialization Branch, National Cancer Institute, 6120 Executive Blvd., EPS Suite 450, Rockville, Maryland 20852, telephone number 301–496–0477, FAX number 301–402–2117.

DATES: interested parties are advised to notify this office in writing of their intent to file a formal proposal no later than FIFTEEN (15) days from the date of this advertisement. Formal proposals must be submitted to this office no later than TWENTY (20) days from the date of this notice.

SUPPLEMENTARY INFORMATION: A CRADA is the anticipated joint agreement to be entered into by NIA pursuant to the Federal Technology Transfer Act of 1986, a amended by the National Technology Transfer Act (Pub. L. 104–113 (Mar. 7, 1996)) and by Executive Order 12591 of April 10, 1987. The NCI owns U.S. Patent No. 4,455,032, concerning the use of phosphocholine hapten conjugates in vaccines, which presently is not licensed. NIA is now planning to develop a vaccine for pneumonia utilizing the invention in the NCI patent.

Under the present proposal, the specific goals of the CRADA will be the development of the following technology:

- Development of one or more vaccines utilizing the phosphocholine-hapten technology;
- and preclinical evaluation of the candidate vaccines.

Party Contributions

The role in NIA includes the following:

(1) Develop, in cooperation with the Collaborator, candidate pneumonia vaccines;

(2) Conduct preclinical trials of candidate vaccines in small mammal models;

(3) Provide staff, expertise, & materials for the development and testing of promising vaccines, and provide work space and equipment for testing of the prototype vaccines; and

(4) Jointly evaluate and publish the data generated with Collaborator.

The role of the successful Collaborator will include the following:

(1) Provide an adequate supply of at least one mutually agreeable, GMP-grade carrier system, and provide expertise and assistance in the development and use of its vaccine carrier system(s);

(2) Provide resources, staff, expertise, and funding, as necessary, in support of the research goals; and

(3) Develop and market any promising vaccines.

Selection Criteria

Proposals submitted for consideration should fully address each of the following qualifications:

(1) Expertise:

A. Demonstrated expertise in developing and producing high quality pharamacuetical compositions;

B. Demonstrated ability to secure national and/or international marketing and distribution of pharmaceutical compositions;

C. Demonstrated intellectual ability to guide development of product line which addresses the requirements of NIA;

(2) Reputation: The successful Collaborator must be recognized in the pharmaceutical industry for:

A. Producing quality pharmaceutical products;

B. Indications of satisfaction by industry experts with the Collaborator's products; and

C. Commitment to the research and development of new pharmaceuticals.

(3) Physical Resources:

A. An established headquarters with offices, space, and equipment;

B. Access to the organization during business hours by telephone, mail, e-mail, the Internet, and other evolving technologies; and

C. Sufficient financial resources to support, at a minimum, the current activities of the CRADA to meet the needs of NIA.

Dated: April 26, 1998.

Kathleen Sybert,

Acting Director, Technology Development & Commercialization Branch, National Cancer Institute, National Institutes of Health.

[FR Doc. 98–12109 Filed 5–6–98; 8:45 am]

BILLING CODE 4140–01–M

DEPARTMENT OF HEALTH AND HUMAN SERVICES

National Institutes of Health

Center for Scientific Review; Notice of Closed Meetings

Pursuant to Section 10(d) of the Federal Advisory Committee Act, as amended (5 U.S.C. Appendix 2), notice is hereby given of the following Center for Scientific Review Special Emphasis Panel (SEP) meetings:

Purpose/Agenda: To review individual grant applications.

Name of SEP: Microbiological and Immunological Sciences.

Date: May 12, 1998.

Time: 1:00 p.m.

Place: NIH, Rockledge 2, Room 4182, Telephone Conference.

Contact Person: Dr. William Branche, Scientific Review Administrator, 6701 Rockledge Drive, Room 4182, Bethesda, Maryland 20892, (301) 435–1148.

Name of SEP: Clinical Sciences.

Date: May 13, 1998.

Time: 9:30 a.m.
Place: Holiday Inn, Chevy Chase, MD.
Contact Person: Dr. Dan McDonald, Scientific Review Administrator, 6701 Rockledge Drive, Room 4214, Bethesda, Maryland 20892, (301) 435–1215

Name of SEP: Microbiological and Immunological Sciences.
Date: May 13, 1998.
Time: 10:00 a.m.
Place: NIH, Rockledge 2, Room 4182, Telephone Conference.
Contact Person: Dr. William Branche, Scientific Review Administrator, 6701 Rockledge Drive, Room 4182, Bethesda, Maryland 20892, (301) 435–1148.

This notice is being published less than 15 days prior to the above meetings due to the urgent need to meet timing limitations imposed by the grant review and funding cycle.

Name of SEP: Behavioral and Neurosciences.
Date: May 21, 1998.
Time: 2:00 p.m.
Place: NIH, Rockledge 2, Room 5172, Telephone Conference.
Contact Person: Dr. Leonard Jakubczak, Scientific Review Administrator, 6701 Rockledge Drive, Room 5172, Bethesda, Maryland 20892, (301) 435–1247.

Name of SEP: Behavioral and Neurosciences.
Date: June 16–18, 1998.
Time: 8:30 a.m.
Place: Doubletree Hotel, Rockville, MD.
Contact Person: Dr. Syed Husain, Scientific Review Administrator, 6701 Rockledge Drive, Room 5216, Bethesda, Maryland 20892, (301) 435–1224.

Name of SEP: Behavioral and Neurosciences.
Date: June 23–25, 1998.
Time: 8:30 a.m.
Place: Radisson Barcelo, Washington, DC.
Contact Person: Dr. Gabrielle LeBlanc, Scientific Review Administrator, 6701 Rockledge Drive, Room 5218, Bethesda, Maryland 20892, (301) 435–1218.

Name of SEP: Multidisciplinary Sciences.
Date: June 25, 1998.
Time: 12:00 p.m.
Place: Holiday Inn-Georgetown, Washington, DC.
Contact Person: Dr. Lee Rosen, Scientific Review Administrator, 6701 Rockledge Drive, Room 5116, Bethesda, Maryland 20892, (301) 435–1171.

The meetings will be closed in accordance with the provisions set forth in sections 552b(c)(4) and 552b(c)(6), Title 5, U.S.C. Applications and/or proposals and the discussions could reveal confidential trade secrets or commercial property such as patentable material and personal information concerning individuals associated with the applications and/or proposals, the disclosure of which would constitute a clearly unwarranted invasions of personal privacy.

(Catalog of Federal Domestic Assistance Program Nos. 93.306, 93.333, 93.337, 93.393–93.396, 93.837–93.844, 93.846–93.878, 93.892, 93,893, National Institutes of Health, HHS)

Dated: April 29, 1998.

LaVerne Y. Stringfield,

Committee Management Officer, NIH.

[FR Doc. 98–12099 Filed 5–6–98; 8:45 am]

BILLING CODE 4140–01–M

DEPARTMENT OF HEALTH AND HUMAN SERVICES

National Institutes of Health

Center for Scientific Review; Notice of Closed Meetings

Pursuant to Section 10(d) of the Federal Advisory Committee Act, as amended (5 U.S.C. Appendix 2), notice is hereby given of the following Center for Scientific Review Special Emphasis Panel (SEP) meetings:

Purpose/Agenda: To review individual grant applications.
Name of SEP: Behavioral and Neurosciences.
Date: May 12, 1998.
Time: 3:00 p.m.
Place: NIH, Rockledge 2, Room 5172, Telephone Conference.
Contact Person: Dr. Leonard Jakubczak, Scientific Review Administrator, 6701 Rockledge Drive, Room 5172, Bethesda, Maryland 20892, (301) 435–1247.

Name of SEP: Behavioral and Neurosciences.
Date: May 18, 1998.
Time: 11:00 a.m.
Place: NIH, Rockledge 2, Room 5172, Telephone Conference.
Contact Person: Dr. Leonard Jakubczak, Scientific Review Administrator, 6701 Rockledge Drive, Room 5172, Bethesda, Maryland 20892, (301) 435–1247.

This notice is being published less than 15 days prior to the above meetings due to the urgent need to meet timing limitations imposed by the grant review and funding cycle.

Name of SEP: Chemistry and Related Sciences.
Date: June 23–24, 1998..
Time: 8:00 a.m..
Place: Hyatt Regency Hotel, Bethesda, MD.
Contact Person: Dr. Marjam Behar, Scientific Review Administrator, 6701 Rockledge Drive, Room 5218, Bethesda, Maryland 20892, (301) 435–1180.

The meetings will be closed in accordance with the provisions set forth in sections 552b(c)(4) and 552b(c)(6), Title 5, U.S.C. Applications and/or proposals and the discussions could reveal confidential trade secrets or commercial property such as patentable material and personal information concerning individuals associated with the applications and/or proposals, the disclosure of which would constitute a clearly unwarranted invasion of personal privacy.

(Catalog of Federal Domestic Assistance Program Nos. 93.306, 93.333, 93.337, 93.393–93.396, 93.837–93.844, 93.846–93.878, 93.892, 93.893, National Institutes of Health, HHS)

Dated: May 1, 1998.

LaVerne Y. Stringfield,

Committee Management Officer, NIH.

[FR Doc. 98–12101 Filed 5–6–98; 8:45 am]

BILLING CODE 4140–01–M

DEPARTMENT OF HEALTH AND HUMAN SERVICES

National Institutes of Health

National Cancer Institute; Notice of Closed Meeting

Pursuant to Section 10(d) of the Federal Advisory Committee Act, as amended (5 U.S.C. Appendix 2), notice is hereby given of the following National Cancer Institute Special Emphasis Panel (SEP) meeting:

Name of SEP: MR Guided Therapy.
Date: May 26–28, 1998.
Time: May 26—7:00 p.m. to Recess, May 27—8:00 a.m. to Recess, May 28–8:00 a.m. to Adjournment.
Place: The Inn at Longwood Medical, 342 Longwood Avenue, Boston, MA 02115.
Contact Person: Ray Bramhall, Ph.D., Scientific Review Administrator, National Cancer Institute, NIH, Executive Plaza North, Room 643B, 6130 Executive Boulevard, MSC 7405, Bethesda, MD 20892–7405, Telephone: 301/496–3428.
Purpose/Agenda: To review, discuss and evaluate grant applications.

The meeting will be closed in accordance with the provisions set forth in sections 552b(c)(4) and 552b(c)(6), Title 5, U.S.C. Applications and the discussions could reveal confidential trade secrets or commercial property such as patentable material and personal information concerning individuals associated with the applications, the disclosure of which would constitute a clearly unwarranted invasion of personal privacy.

(Catalog of Federal Domestic Assistance Program Numbers: 93.393, Cancer Cause and Prevention Research; 93.394, Cancer Detection and Diagnosis Research; 93.395, Cancer Treatment Research; 93.396, Cancer Biology Research; 93.397, Cancer Centers Support; 93.398, Cancer Research Manpower; 93.399, Cancer Control)

Dated: April 30, 1998.

LaVerne Y. Stringfield,

Committee Management Officer, NIH.

[FR Doc. 98–12107 Filed 5–6–98; 8:45 am]

BILLING CODE 4140–01–M

DEPARTMENT OF HEALTH AND HUMAN SERVICES

National Institutes of Health

National Center for Research Resources; Notice of Closed Meeting

Pursuant to Section 10(d) of the Federal Advisory Committee Act, as

amended (5 U.S.C. Appendix 2), notice is hereby given of the following National Center for Research Resources Special Emphasis Panel (SEP) meeting:

Name of SEP: Research Centers in Minority Institutions.
Date: June 1, 1998.
Time: 5:00 p.m.
Place: Doubletree Hotel, 1750 Rockville Pike, Rockville, MD 20852, (301) 468–1100.
Contact Person: Dr. Bela J. Gulyas, Scientific Review Administrator, 6705 Rockledge Drive, MSC 7965, Room 6018, Bethesda, MD 20892–7965, (301) 435–0811.
Purpose/Agenda: To evaluate and review grant applications.

The meeting will be closed in accordance with the provisions set forth in sections 552b(c)(4) and 552b(c)(6), Title 5, U.S.C. Applications and/or proposals and the discussions could reveal confidential trade secrets or commercial property such as patentable material and personal information concerning individuals associated with the applications and/or proposals, the disclosure of which would constitute a clearly unwarranted invasion of personal privacy.

(Catalog of Federal Domestic Assistance Program No. 93.398, Research Centers in Minority Institutions, National Institutes of Health, HHS)

Dated: April 29, 1998.

LaVerne Y. Stringfield,

Committee Management Officer, NIH.

[FR Doc. 98–12100 Filed 5–6–98; 8:45 am]

BILLING CODE 4140–01–M

DEPARTMENT OF HEALTH AND HUMAN SERVICES

National Institutes of Health

National Center for Research Resources; Notice of Meetings

Pursuant to Public Law 92–463, notice is hereby given of the meetings of the National Center for Research Resources Initial Review Group and the Scientific and Technical Review Board on Biomedical and Behavioral Research Facilities, National Center for Research Resources (NCRR), for May and June 1998. These meetings will be open to the public as indicated below to discuss program planning; program accomplishments; administrative matters such as previous meeting minutes; the report of the Director, NCRR; review of budget and legislative updates; and special reports or other issues relating to committee business. Attendance by the public will be limited to space available.

These meetings will be closed to the public as indicated below in accordance with provisions set forth in sections 552b(c)(4) and 552b(c)(6), Title 5, U.S.C. and section 10(d) of Public Law 92–463, for the review, discussion and evaluation of individual grant applications. These applications and the discussions could reveal confidential trade secrets or commercial property such as patentable material, and personal information concerning individuals associated with the applications, the disclosure of which would constitute a clearly unwarranted invasion of personal privacy.

Ms. Cheryl A. Fee, Committee Management Officer, NCRR, National Institutes of Health, One Rockledge Centre, Room 5170, 6705 Rockledge Drive, MSC 7965, Bethesda, Maryland 20892–7965, 301–435–1827, will provide summaries of meetings and rosters of committee members. Other information pertaining to the meetings can be obtained from the Scientific Review Administrator indicated. Individuals who plan to attend and need special assistance, such as sign language interpretation or other reasonable accommodations, should contact the Scientific Review Administrator listed below, in advance of the meetings.

Name of Committee: Scientific and Technical Review Board on Biomedical and Behavioral Research Facilities.
Date of Meeting: May 27–29, 1998.
Place of Meeting: The Bethesda Ramada, Embassy Three, 8400 Wisconsin Avenue, Bethesda, MD 20814, 301–654–1000.
Open: May 27, 8:00 a.m.—9:30 a.m.
Closed: May 27, 9:30—Until Adjournment.
Scientific Review Administrator: Dr. D.G. Patel, National Institutes of Health, One Rockledge Centre, Room 6018, 6705 Rockledge Drive, MSC 7965, Bethesda, MD 20892–7965, Telephone: 301–435–0824.

Name of Committee: National Center for Research Resources Initial Review Group—Comparative Medicine Review Committee.
Date of Meeting: June 1–2, 1998.
Place of Meeting: Holiday Inn Georgetown, Kaleidoscope Room, 2101 Wisconsin Avenue, NW, Washington, DC 20007, 202–338–4600.
Open: June 1, 8:00 a.m.—9:30 a.m.
Closed: June 2, 9:30—Until Adjournment.
Scientific Review Administrator: Dr. Raymond O'Neill, National Institutes of Health, One Rockledge Centre, Room 6018, 6705 Rockledge Drive, MSC 7965, Bethesda, MD 20892–7965, Telephone: 301–435–0820.

Name of Committee: National Center for Research Resources Initial Review Group—Research Centers in Minority Institutions Review Committee.
Date of Meeting: June 1–3, 1998.
Place of Meeting: Doubletree Hotel, Twinbrook Room, 1750 Rockville Pike, Rockville, MD 20852, 301–468–1100
Open: June 1, 8:30 a.m.–10:30 a.m.
Closed: June 1, 10:30 a.m.–Until Adjournment.
Scientific Review Administrator: Dr. John Meyers, National Institutes of Health, One Rockledge Centre, Room 6018, 6705 Rockledge Drive, MSC 7965, Bethesda, MD 20892–7965, Telephone: 301–435–0820.

Name of Committee: National Center for Research Resources Initial Review Group—General Clinical Research Centers Review Committee.
Date of Meeting: June 17–18, 1998.
Place of Meeting: Ramada Inn, Rockville, 1775 Rockville Pike, Montrose Room, Rockville, MD 20852, 301–881–2300.
Open: June 17, 8:00 a.m.–9:45 a.m.
Closed: June 18, 9:45 a.m.–Until Adjournment.
Scientific Review Administrator: Dr. Charles Hollingsworth, National Institutes of Health, One Rockledge Centre, Room 6018, 6705 Rockledge Drive, MSC 7965, Bethesda, MD 20892–7965, Telephone: 301–435–0818.

(Catalog of Federal Domestic Assistance Program Nos. 93.306, Laboratory Animal Sciences and Primate Research; 93.333, Clinical Research; 93.389, Research Centers in Minority Institutions; 93.167, Research Facilities Improvement Program; 93.214 Extramural Research Facilities Construction Projects, National Institutes of Health)

Dated: April 29, 1998.

LaVerne Y. Stringfield,

Committee Management Officer, NIH.

[FR Doc. 98–12103 Filed 5–6–98; 8:45 am]

BILLING CODE 4140–01–M

DEPARTMENT OF HEALTH AND HUMAN SERVICES

National Institutes of Health

National Institute of Child Health and Human Development; Notice of Closed Meeting

Pursuant to Section 10(d) of the Federal Advisory Committee Act, as amended (5 U.S.C. Appendix 2), notice is hereby given of the following National Institute of Child Health and Human Development Special Emphasis Panel (SEP) meeting:

Name of SEP: Data Coordination Center for the NIH–DC Initiative to Reduce Infant Mortality in Minority Populations.
Date: May 13, 1998.
Time: 2:00 p.m.–adjournment.
Place: 6100 Executive Boulevard, 6100 Executive Building, Room 5E01, Rockville, MD, 20852.
Contact Person: Hemeed Khan, Ph.D., Scientific Review Administrator, NICHD, 6100 Executive Boulevard, Room 5E01, Rockville, MD 20852, Telephone: 301–496–1485.
Purpose/Agenda: To evaluate and review research grant applications.

This meeting will be closed in accordance with the provisions set forth in sections 552b(c)(4) and 552b(c)(6), Title 5 U.S.C. The discussion of these applications could reveal confidential trade secrets or commercial property such as patentable material and personal information concerning individuals associated with these applications, the disclosure of which would constitute a clearly unwarranted invasion of personal privacy.

(Catalog of Federal Domestic Assistance Program Nos. [93.864, Population Research and No. 93.865, Research for Mothers and Children], National Institute of Health, HHS)

Date: April 29, 1998.

LaVerne Y. Stringfield,

Committee Management Officer, NIH.

[FR Doc. 98–12098 Filed 5–6–98; 8:45 am]

BILLING CODE 4140–01–M

DEPARTMENT OF HEALTH AND HUMAN SERVICES

National Institutes of Health

National Institute on Alcohol Abuse and Alcoholism; Notice of Closed Meeting

Pursuant to Section 10(d) of the Federal Advisory Committee Act, as amended (5 U.S.C. Appendix 2), notice is hereby given of the following meeting.

Purpose/Agenda: To review and evaluate grant applications.

Name of Committee: National Institute on Alcohol Abuse and Alcoholism Special Emphasis Panel.

Date of Meeting: May 1, 1998 (Telephone Conference).

Time: 12:00 P.M. to adjournment.

Place of Meeting: Willco Building, 6000 Executive Boulevard, Suite 409, Rockville, MD 20892–7003.

Contact Person: Sean O'Rourke, 6000 Executive Boulevard, Suite 409, Rockville, MD 20892–7003, 301–443–2861.

This notice is being published less than 15 days prior to the meeting due to the urgent need to meet timing limitations imposed by the review and funding cycle.

The meeting will be closed in accordance with the provisions set forth in sections 552b(c)(4) and 552b(c)(6), Title 5 U.S.C. The proposal and discussions could reveal confidential trade secrets or commercial property such as patentable material, and personal information concerning individuals associated with the proposal, the disclosure of which would constitute a clearly unwarranted invasion of personal privacy.

(Catalog of Federal Domestic Assistance, Program Nos. 93.271, Alcohol Research Career Development Awards for Scientist and Clinicians; 93.272, Alcohol National Research Service Awards for Research Training; 93.273, Alcohol Research Programs; and 93.891, Alcohol Research Center Grants; National Institutes of Health)

Dated: April 29, 1998.

LaVerne Y. Stringfield,

Committee Management Officer, NIH.

[FR Doc. 98–12104 Filed 5–6–98; 8:45 am]

BILLING CODE 4140–01–M

DEPARTMENT OF HEALTH AND HUMAN SERVICES

National Institutes of Health

National Institute of Child Health and Human Development; Notice of Meeting of the Board of Scientific Counselors

Pursuant to Public Law 92–463, notice is hereby given of the meeting of the Board of Scientific Counselors, National Institute of Child Health and Human Development, June 5, 1998, in Building 31, Room 2A52.

This meeting will be open to the public from 8:00 a.m. to 12 noon on June 5 for the review of the Intramural Research Program and scientific presentations. Attendance by the public will be limited to space available.

In accordance with the provisions set forth in section 552b(c)(6), Title 5, U.S.C. and section 10(d) of Public Law 92–463, the meeting will be closed to the public on June 5 from 1:00 p.m. to adjournment for the review, discussion, and evaluation of individual programs and projects conducted by the National Institutes of Health, including consideration of personnel qualifications and performance, the competence of individual investigators, and similar items, the disclosure of which would constitute a clearly unwarranted invasion of personal privacy.

Ms. Catherine O'Connor, Senior Biomedical Research Program Assistant, NICHD, Building 31, Room 2A50, National Institutes of Health, Bethesda, Maryland, 20892–2425, 301–496–2133, will provide a summary of the meeting, a roster of Board members, and substantive program information upon request. Individuals who plan to attend the open session and need special assistance, such as sign language interpretation or other reasonable accommodations, should contact Ms. O'Connor in advance of the meeting.

Dated: April 29, 1998.

LaVerne Y. Stringfield,

Committee Management Officer, NIH.

[FR Doc. 98–12105 Filed 5–6–98; 8:45 am]

BILLING CODE 4140–01–M

DEPARTMENT OF HEALTH AND HUMAN SERVICES

National Institutes of Health

National Institute of General Medical Sciences; Notice of Closed Meeting

Pursuant to Section 10(d) of the Federal Advisory Committee Act, as amended (5 United States Code Appendix 2), notice is hereby given of the following National Institute of General Medical Sciences Initial Review Group (IRG) meeting:

Name of IRG: Biomedical Research and Research Training Subcommittee B.

Date: June 16, 1998.

Time: 8:30 a.m.—adjournment.

Place: Holiday Inn—Bethesda, 8120 Wisconsin Avenue, Bethesda, Maryland 20814.

Contact Person: Dr. Irene Glowinski, Scientific Review Administrators, NIGMS, Natcher Building—Room 1AS–13, Bethesda, Maryland 20892, Telephone: 301–594–2772.

Purpose/Agenda: To evaluate and review research training grant applications.

The meeting will be closed in accordance with the provisions set forth in Sections 552b(c)(4) and 552b(c)(6), Title 5 U.S.C. The discussion of these applications could reveal confidential trade secrets or commercial property such as patentable material and personal information concerning individuals associated with these applications, the disclosure of which would constitute a clearly unwarranted invasion of personal privacy.

(Catalog of Federal Domestic Assistance Program Nos. [93.821, Biophysics and Physiological Sciences; 93.859, Pharmacological Sciences; 93.862, Genetics Research; 93.863, Cellular and Molecular Basis of Disease Research; 93.880, Minority Access Research Careers (MARC); and 93.375, Minority Biomedical Research Support (MBRS)], National Institutes of Health)

Dated: April 29, 1998.

LaVerne Y. Stringfield,

Committee Management Officer, NIH.

[FR Doc. 98–12106 Filed 5–6–98; 8:45 am]

BILLING CODE 4140–01–M

DEPARTMENT OF HEALTH AND HUMAN SERVICES

National Institutes of Health

National Institute of Dental Research; Notice of a Meeting of the National Advisory Dental Research Council

Pursuant to Pub. L. 92–463, notice is hereby given of a meeting of the National Advisory Dental Research Council, National Institute of Dental Research, on June 9–10, 1998, Conference Rooms E1–E2, Building 45, National Institutes of Health, Bethesda, Maryland. This meeting will be open to the public from 8:30 until 11:15 a.m. on June 9, 1998, for general discussion and program presentations. Attendance by the public will be limited to space available.

In accordance with the provisions set forth in secs. 552b(c)(4) and 552b(c)(6), Title 5, U.S.C. and sec. 10(d) of Pub. L. 92–463, the meeting of the Council will be closed to the public on June 10, 9:00

a.m. to adjournment for the review, discussion and evaluation of individual grant applications. These applications and information concerning individuals associated with the discussions could reveal confidential trade secrets or commercial property such as patentable material, and personal applications and reports, the disclosure of which would constitute a clearly unwarranted invasion of personal privacy.

Dr. Dushanka V. Kleinman, Executive Secretary, National Advisory Dental Research Council, and Deputy Director, National Institute of Dental Research, National Institutes of Health, Building 31, Room 2C39, Bethesda, Maryland 20892, (telephone (301) 496–9469) will furnish a roster of committee members, a summary of the meeting, and other information pertaining to the meeting upon request. Individuals who plan to attend and need special assistance, such as sign language interpretation or other reasonable accommodations, should contact the Executive Secretary listed above in advance of the meeting.

(Catalog of Federal Domestic Assistance Program No. 93.121, Oral Diseases and Disorders Research)

Dated: May 4, 1998.

LaVerne Y. Stringfield,

Committee Management Officer, NIH.

[FR Doc. 98–12174 Filed 5–6–98; 8:45 am]

BILLING CODE 4140–01–M

DEPARTMENT OF HEALTH AND HUMAN SERVICES

National Institutes of Health

National Institute of Alcohol Abuse and Alcoholism, Notice of Closed Meeting

Pursuant to Section 10(d) of the Federal Advisory Committee Act, as amended (5 U.S.C. Appendix 2), notice is hereby given of the following meeting:

Purpose/Agenda: To review and evaluate a grant application.

Name of Committee: National Institute on Alcohol Abuse and Alcoholism Special Emphasis Panel.

Date of Meeting: May 4, 1998 (Telephone Conference).

Time: 1:30 P.M. to adjournment.

Place of Meeting: Willco Building, 6000 Executive Boulevard, Suite 409, Rockville, MD 20892–7003.

Contact Person: Sean O'Rourke, 6000 Executive Boulevard, Suite 409, Rockville MD 20892–7003, 301–443–2861.

This notice is being published less than 15 days prior to the meeting due to the urgent need to meet timing limitations imposed by the review and funding cycle.

The meeting will be closed in accordance with the provisions set forth in secs. 552b(c)(4) and 552b(c)(6), Title 5 U.S.C. The proposal and discussions could reveal confidential trade secrets or commercial property such as patentable material, and personal information concerning individuals associated with the proposal, the disclosure of which would constitute a clearly unwarranted invasion of personal privacy.

(Catalog of Federal Domestic Assistance, Program Nos. 93.271, Alcohol Research Career Development Awards for Scientists and Clinicians; 93.272, Alcohol National Research Service Awards for Research Training; 93.273, Alcohol Research Programs; and 93.891, Alcohol Research Center Grants; National Institutes of Health)

Dated: May 4, 1998.

LaVerne Y. Stringfield,

Committee Management Officer, NIH.

[FR Doc. 98–12175 Filed 5–6–98; 8:45 am]

BILLING CODE 4140–01–M

DEPARTMENT OF HEALTH AND HUMAN SERVICES

National Institutes of Health

National Institute on Alcohol Abuse and Alcoholism; Notice of Meeting

Pursuant to Pub. L. 92–463, notice is hereby given of a meeting of the National Advisory Council on Alcohol Abuse and Alcoholism on June 3–4, 1998.

The meeting will be open to the public, as noted below, to discuss Institute programs and other issues relating to committee activities as indicated in the notice. Attendance by the public will be limited to space available. Individuals who plan to attend and need special assistance, such as sign language interpretation or other reasonable accommodations, should contact Ms. Ida Nestorio at 301–443–4376.

The meeting will be closed to the public as indicated below in accordance with the provisions set forth in secs. 552b(c)(4) and 552b(c)(6) of Title 5, U.S.C. and sec. 10(d) of Public Law 92–463 for the review, discussion and evaluation of individual research grant applications. These applications and the discussions could reveal confidential trade secrets or commercial property such as patentable material, and personal information concerning individuals associated with the applications and programs, the disclosure of which would constitute a clearly unwarranted invasion of personal privacy.

A summary of the meeting and the roster of committee members may be obtained from: Ms. Ida Nestorio, Office of Scientific Affairs, National Institute on Alcohol Abuse and Alcoholism, Willco Building, Suite 409, 6000 Executive Blvd., Rockville, MD 20892–7003, Telephone: 301–443–4376. Other information pertaining to the meeting may be obtained from the contact person indicated.

Name of Committee: National Advisory Council on Alcohol Abuse and Alcoholism.

Executive Secretary: James F. Vaughan, 6000 Executive Blv., Suite 409, Bethesda, MD 20892–7003, 301–443–4375.

Dates of Meeting: June 3–4, 1998.

Places of Meeting: (June 3) Pooks Hill Marriott Hotel, Bethesda, MD 20814; (June 4), Conference Room E1 & E2, Building 45 (Natcher), NIH Campus, 9000 Rockville Pike, Bethesda, MD 20892.

Closed: June 3, 1998—7:00 p.m. to 9:00 p.m.

Agenda: To review and evaluate grant applications.

Open: June 4, 1998—8:30 a.m.–3:00 p.m.

Agenda: Discussion of Institute extramural research programs, and other program and peer review issues relevant to Council activities.

(Catalog of Federal Domestic Assistance Program No. 93.271, Alcohol Research Career Development Awards for Scientists and Clinicians; 93.272, Alcohol National Research Service Awards for Research Training; 93.273, Alcohol Research Programs; 93.891, Alcohol Research Center Grants; National Institutes of Health)

Dated: May 4, 1998.

LaVerne Y. Stringfield,

Committee Management Officer, NIH.

[FR Doc. 98–12176 Filed 5–6–98; 8:45 am]

BILLING CODE 4140–01–M

DEPARTMENT OF HEALTH AND HUMAN SERVICES

National Institutes of Health

Electric and Magnetic Fields Research and Public Information Dissemination (EMF RAPID) Program; Notice of Meeting

Background

The National Institute of Environmental Health Sciences (NIEHS) and the Department of Energy (DOE) are coordinating the implementation of the Electric and Magnetic Fields (EMF) Research and Public Information Dissemination (RAPID) Program. The EMF*RAPID* Program was established by the 1992 Energy Policy Act (Section 2118 for Public Law 102–486) which was signed in October 1992. This five-year effort is designed to determine the potential effect from exposure to 60 Hz electric and magnetic fields on biological systems, especially those produced by the generation, transmission, and use of electric energy. The RAPID Program requires the NIEHS to report on the extent to which exposure to electric and magnetic fields

adversely affects human health. Additional details of this program are found in **Federal Register** December 16, 1997, (Volume 62, No. 241, pp. 65814–65815).

Working Group Meeting on EMF Health Effects Research Open to the Public

The next phase of the NIEHS report development process includes a Working Group meeting of scientists from multiple disciplines. The Working Group members are tasked with writing a comprehensive review of the literature on the potential for extremely low frequency EMF to affect human health. This document will draw conclusions on the strength and robustness of the data and its implications for human health effects and disease etiology. This meeting is scheduled for June 15–24, 1998, at the Northland Inn, Brooklyn Park, Minnesota, and is open to the public.

Detailed information about the EMF*RAPID* Program is found on the world wide web at www.niehs.nih.gov/emfrapid/home.htm. For additional information about the Working Group meeting, send a request by fax to 919–541–0144 or by mail to EMF*RAPID* Program, LCBRA, NIEHS, NIH, PO Box 12233 MS EC–16, Research Triangle Park, NC 27709, or call 919–541–7534.

Dated: April 30, 1998.

Samuel H. Wilson,

National Institute of Environmental Health Sciences.

[FR Doc. 98–12177 Filed 5–6–98; 8:45 am]

BILLING CODE 4140–01–M

DEPARTMENT OF HEALTH AND HUMAN SERVICES

National Institutes of Health

Warren Grant Magnuson Clinical Center; Notice of Meeting of the Board of Governors of the Warren Grant Magnuson Clinical Center

Pursuant to Public Law 92–463, notice is hereby given of the meeting of the Board of Governors of the Warren Grant Magnuson Clinical Center, May 27, 1998. The Board of Governors will meet at the National Institutes of Health, Clinical Center (Building 10), Medical Board Room (2C116), 9000 Rockville Pike, Bethesda, Maryland, from 9:00 a.m. until approximately 12:30 p.m.

The entire meeting will be open to the public and will include review of the minutes of the March 23, 1998 Executive Committee meeting, updates on the budget, strategic planning, and the Clinical Research Center.

Attendance by the public will be limited to space available.

For further information, contact Ms. Maggi Stakem, Office of the Director, Warren Grant Magnuson Clinical Center, Building 10, Room 2C146, Bethesda, Maryland 20892, (301) 496–4114.

Individuals who plan to attend and need special assistance, such as sign language interpretation or other reasonable accommodations, should contact Ms. Stakem in advance of the meeting.

Dated: May 1, 1998.

LaVerne Y. Stringfield,

Committee Management Officer, NIH.

[FR Doc. 98–12102 Filed 5–6–98; 8:45 am]

BILLING CODE 4140–01–M

DEPARTMENT OF HEALTH AND HUMAN SERVICES

National Institutes of Health

Prospective Grant of Exclusive License: Container for Drying Biological Samples, Method of Making Such Container, and Method of Using Same

AGENCY: National Institutes of Health, Public Health Service, DHHS.

ACTION: Notice.

SUMMARY: This is notice in accordance with 15 U.S.C. 209(c)(1) and 37 CFR 404.7(a)(1)(I) that the National Institutes of Health (NIH), Department of Health and Human Services, is contemplating the grant of an exclusive worldwide license to practice the invention embodied in U.S. Patent Applicant SN 08/717,114 entitled ''Container for Drying Biological Samples, Method of Making Such Container, and Method of Using Same'' and related U.S. and foreign patent applications to Whatman, Incorporated of Clifton, New Jersey. The patent rights in this invention have been assigned to the United States of America.

Is is anticipated that this license may be limited to the field of sales to; biotechnology labortories, and original equipment manufacturers of diagnostics.

DATES: Only written comments and/or applications for a license which are received by the NIH Office of Technology Transfer on or before July 6, 1998 will be considered.

ADDRESSES: Requests for a copy of this patent application, inquiries, comments and other materials relating to the contemplated license should be directed to: David R. Sadowski, Technology Transfer Specialist, Office of Technology transfer, National Institutes of Health, 6011 Executive Boulevard, Suite 325, Rockville, MD 20852; Telephone (301) 496–7056 extension 288; Facsimile: (301) 401–0220; E-mail ds27a@nih.gov. A signed Confidential Disclosure Agreement will be required to receive a copy of the patent application.

SUPPLEMENTARY INFORMATION: The patent application describes a method (and associated device) for venting a sample which is in a container, the method comprising: providing a container having an opening, the opening being sealed substantially with a filter. The filter permitting permeation therethrough of at least one gas and substantially preventing permeation therethrough of microbes. Wherein said container is configured to withstand high speed centrifugation of 50 or more times the force of gravity. Thus, gas is permitted to enter or exit the container by permeating the filter, thereby affording venting of the sample without substantial contamination of the sample with microbes. More broadly, this invention permits the lyophilization or venting or other permeation of gas into, or out of, a container, while preventing contamination of a sample which is within the container.

The prospective exclusive license will be royalty-bearing and will comply with the terms and conditions of 35 U.S.C. 209 and 37 CFR 404.7. This prospective exclusive license may be granted unless within 60 days from the date of this published notice, NIH receives written evidence and argument that establishes that the grant of the license would not be consistent with the requirements of 35 U.S.C. 209 and 37 CFR 404.7.

Applications for a license filed in response to this notice will be treated as objections to the grant of the contemplated license. Comments and objections submitted in response to this notice will be not made available for public inspection, and, to the extent permitted by law, will not be released under the Freedom of Information Act, 5 U.S.C. 552.

Dated: April 29, 1998.

Jack Spiegel,

Director, Division of Technology Development and Transfer, Office of Technology Transfer.

[FR Doc. 98–12108 Filed 5–6–98; 8:45 am]

BILLING CODE 4140–01–M

DEPARTMENT OF HEALTH AND HUMAN SERVICES

Substance Abuse and Mental Health Services Administration

Current List of Laboratories Which Meet Minimum Standards To Engage in Urine Drug Testing for Federal Agencies, and Laboratories That Have Withdrawn From the Program

AGENCY: Substance Abuse and Mental Health Services Administration, HHS.

ACTION: Notice.

SUMMARY: The Department of Health and Human Services notifies Federal agencies of the laboratories currently certified to meet standards of Subpart C of Mandatory Guidelines for Federal Workplace Drug Testing Programs (59 FR 29916, 29925). A similar notice listing all currently certified laboratories will be published during the first week of each month, and updated to include laboratories which subsequently apply for and complete the certification process. If any listed laboratory's certification is totally suspended or revoked, the laboratory will be omitted from updated lists until such time as it is restored to full certification under the Guidelines.

If any laboratory has withdrawn from the National Laboratory Certification Program during the past month, it will be identified as such at the end of the current list of certified laboratories, and will be omitted from the monthly listing thereafter.

This Notice is now available on the internet at the following website: http://www.health.org

FOR FURTHER INFORMATION CONTACT: Mrs. Giselle Hersh or Dr. Walter Vogl, Division of Workplace Programs, Room 13A–54, 5600 Fishers Lane, Rockville, Maryland 20857; Tel.: (301) 443–6014.

SUPPLEMENTARY INFORMATION: Mandatory Guidelines for Federal Workplace Drug Testing were developed in accordance with Executive Order 12564 and section 503 of Pub. L. 100–71. Subpart C of the Guidelines, ''Certification of Laboratories Engaged in Urine Drug Testing for Federal Agencies,'' sets strict standards which laboratories must meet in order to conduct urine drug testing for Federal agencies. To become certified an applicant laboratory must undergo three rounds of performance testing plus an on-site inspection. To maintain that certification a laboratory must participate in a quarterly performance testing program plus periodic, on-site inspections.

Laboratories which claim to be in the applicant stage of certification are not to be considered as meeting the minimum requirements expressed in the HHS Guidelines. A laboratory must have its letter of certification from SAMHSA, HHS (formerly: HHS/NIDA) which attests that it has met minimum standards.

In accordance with Subpart C of the Guidelines, the following laboratories meet the minimum standards set forth in the Guidelines:

ACL Laboratory, 8901 W. Lincoln Ave., West Allis, WI 53227, 414–328–7840 (formerly: Bayshore Clinical Laboratory)

Aegis Analytical Laboratories, Inc., 345 Hill Ave., Nashville, TN 37210, 615–255–2400

Alabama Reference Laboratories, Inc., 543 South Hull St., Montgomery, AL 36103, 800–541–4931 / 334–263–5745

Alliance Laboratory Services, 3200 Burnet Ave., Cincinnati, OH 45229, 513–569–2051 (formerly: Jewish Hospital of Cincinnati, Inc.)

American Medical Laboratories, Inc., 14225 Newbrook Dr., Chantilly, VA 20151, 703–802–6900

Associated Pathologists Laboratories, Inc., 4230 South Burnham Ave., Suite 250, Las Vegas, NV 89119–5412, 702–733–7866 / 800–433–2750

Associated Regional and University Pathologists, Inc. (ARUP), 500 Chipeta Way, Salt Lake City, UT 84108, 801–583–2787 / 800–242–2787

Baptist Medical Center—Toxicology Laboratory, 9601 I–630, Exit 7, Little Rock, AR 72205–7299, 501–202–2783 (formerly: Forensic Toxicology Laboratory Baptist Medical Center)

Cedars Medical Center, Department of Pathology, 1400 Northwest 12th Ave., Miami, FL 33136, 305–325–5784

Clinical Reference Lab, 8433 Quivira Rd., Lenexa, KS 66215–2802, 800–445–6917

Cox Health Systems, Department of Toxicology, 1423 North Jefferson Ave., Springfield, MO 65802, 800–876–3652 / 417–269–3093 (formerly: Cox Medical Centers)

Dept. of the Navy, Navy Drug Screening Laboratory, Great Lakes, IL, P.O. Box 88–6819, Great Lakes, IL 60088–6819, 847–688–2045 / 847–688–4171

Diagnostic Services Inc., dba DSI, 4048 Evans Ave., Suite 301, Fort Myers, FL 33901, 941–418–1700 / 800–735–5416

Doctors Laboratory, Inc., P.O. Box 2658, 2906 Julia Dr., Valdosta, GA 31604, 912–244–4468

DrugProof, Division of Dynacare/Laboratory of Pathology, LLC, 1229 Madison St., Suite 500, Nordstrom Medical Tower, Seattle, WA 98104, 800–898–0180 / 206–386–2672, (formerly: Laboratory of Pathology of Seattle, Inc., DrugProof, Division of Laboratory of Pathology of Seattle, Inc.)

DrugScan, Inc., P.O. Box 2969, 1119 Mearns Rd., Warminster, PA 18974, 215–674–9310

ElSohly Laboratories, Inc., 5 Industrial Park Dr., Oxford, MS 38655, 601–236–2609

General Medical Laboratories, 36 South Brooks St., Madison, WI 53715, 608–267–6267

Hartford Hospital Toxicology Laboratory, 80 Seymour St., Hartford, CT 06102–5037, 860–545–6023

LabCorp Occupational Testing Services, Inc., 1904 Alexander Drive, Research Triangle Park, NC 27709, 919–672–6900 / 800–833–3984 (Formerly: CompuChem Laboratories, Inc.; CompuChem Laboratories, Inc., A Subsidiary of Roche Biomedical Laboratory; Roche CompuChem Laboratories, Inc., A Member of the Roche Group)

LabCorp Occupational Testing Services, Inc., 4022 Willow Lake Blvd., Memphis, TN 38118, 901–795–1515/800–223–6339 (Formerly: MedExpress/National Laboratory Center)

LabOne, Inc., 8915 Lenexa Dr., Overland Park, Kansas 66214, 913–888–3927 / 800–728–4064 (formerly: Center for Laboratory Services, a Division of LabOne, Inc.)

Laboratory Corporation of America, 888 Willow St., Reno, NV 89502, 702–334–3400, (formerly: Sierra Nevada Laboratories, Inc.)

Laboratory Corporation of America Holdings, 69 First Ave., Raritan, NJ 08869, 800–437–4986 / 908–526–2400 (Formerly: Roche Biomedical Laboratories, Inc.)

Laboratory Specialists, Inc., 1111 Newton St., Gretna, LA 70053, 504–361–8989 / 800–433–3823

Marshfield Laboratories, Forensic Toxicology Laboratory, 1000 North Oak Ave., Marshfield, WI 54449, 715–389–3734 / 800–331–3734

Medical College Hospitals Toxicology Laboratory, Department of Pathology, 3000 Arlington Ave., Toledo, OH 43614, 419–381–5213

Medlab Clinical Testing, Inc., 212 Cherry Lane, New Castle, DE 19720, 302–655–5227

MedTox Laboratories, Inc., 402 W. County Rd. D, St. Paul, MN 55112, 800–832–3244 / 612–636–7466

Methodist Hospital Toxicology Services of Clarian Health Partners, Inc., Department of Pathology and Laboratory Medicine, 1701 N. Senate Blvd., Indianapolis, IN 46202, 317–929–3587

Methodist Medical Center Toxicology Laboratory, 221 N.E. Glen Oak Ave., Peoria, IL 61636, 800–752–1835 / 309–671–5199

MetroLab-Legacy Laboratory Services, 1225 NE 2nd Ave., Portland, OR 97232, 503–413–4512, 800–950–5295

Minneapolis Veterans Affairs Medical Center, Forensic Toxicology Laboratory, 1 Veterans Drive, Minneapolis, Minnesota 55417, 612–725–2088

National Toxicology Laboratories, Inc., 1100 California Ave., Bakersfield, CA 93304, 805–322–4250

Northwest Toxicology, Inc., 1141 E. 3900 South, Salt Lake City, UT 84124, 800–322–3361 / 801–268–2431

Oregon Medical Laboratories, P.O. Box 972, 722 East 11th Ave., Eugene, OR 97440–0972, 541–341–8092

Pacific Toxicology Laboratories, 1519 Pontius Ave., Los Angeles, CA 90025, 310–312–0056, (formerly: Centinela Hospital Airport Toxicology Laboratory

Pathology Associates Medical Laboratories, 11604 E. Indiana, Spokane, WA 99206, 509–926–2400 / 800–541–7891
PharmChem Laboratories, Inc., 1505–A O'Brien Dr., Menlo Park, CA 94025, 650–328–6200 / 800–446–5177
PharmChem Laboratories, Inc., Texas Division, 7610 Pebble Dr., Fort Worth, TX 76118, 817–595–0294 (formerly: Harris Medical Laboratory)
Physicians Reference Laboratory, 7800 West 110th St., Overland Park, KS 66210, 913–339–0372 / 800–821–3627
Poisonlab, Inc., 7272 Clairemont Mesa Blvd., San Diego, CA 92111, 619–279–2600 / 800–882–7272
Premier Analytical Laboratories, 15201 East I–10 Freeway, Suite 125, Channelview, TX 77530, 713–457–3784 / 800–888–4063 (formerly: Drug Labs of Texas)
Presbyterian Laboratory Services, 1851 East Third Street, Charlotte, NC 28204, 800–473–6640
Quest Diagnostics Incorporated, 4444 Giddings Road, Auburn Hills, MI 48326, 810–373–9120 / 800–444–0106 (formerly: HealthCare/Preferred Laboratories, HealthCare/MetPath, CORNING Clinical Laboratories)
Quest Diagnostics Incorporated, National Center for Forensic Science, 1901 Sulphur Spring Rd., Baltimore, MD 21227, 410–536–1485 (formerly: Maryland Medical Laboratory, Inc., National Center for Forensic Science, CORNING National Center for Forensic Science)
Quest Diagnostics Incorporated, 4770 Regent Blvd., Irving, TX 75063, 800–526–0947 / 972–916–3376 (formerly: Damon Clinical Laboratories, Damon/MetPath, CORNING Clinical Laboratories)
Quest Diagnostics Incorporated, 875 Greentree Rd., 4 Parkway Ctr., Pittsburgh, PA 15220–3610, 800–574–2474 / 412–920–7733 (formerly: Med-Chek Laboratories, Inc., Med-Chek/Damon, MetPath Laboratories, CORNING Clinical Laboratories)
Quest Diagnostics Incorporated, 2320 Schuetz Rd., St. Louis, MO 63146, 800–288–7293 / 314–991–1311, (formerly: Metropolitan Reference Laboratories, Inc., CORNING Clinical Laboratories, South Central Division)
Quest Diagnostics Incorporated, 7470 Mission Valley Rd., San Diego, CA 92108–4406, 800–446–4728 / 619–686–3200, (formerly: Nichols Institute, Nichols Institute Substance Abuse Testing (NISAT), CORNING Nichols Institute, CORNING Clinical Laboratories)
Quest Diagnostics Incorporated, One Malcolm Ave., Teterboro, NJ 07608, 201–393–5590, (formerly: MetPath, Inc., CORNING MetPath Clinical Laboratories, CORNING Clinical Laboratory)
Quest Diagnostics Incorporated, 1355 Mittel Blvd., Wood Dale, IL 60191, 630–595–3888 (formerly: MetPath, Inc., CORNING MetPath Clinical Laboratories, CORNING Clinical Laboratories Inc.)
Scientific Testing Laboratories, Inc., 463 Southlake Blvd., Richmond, VA 23236, 804–378–9130
Scott & White Drug Testing Laboratory, 600 S. 31st St., Temple, TX 76504, 800–749–3788 / 254–771–8379
S.E.D. Medical Laboratories, 500 Walter NE, Suite 500, Albuquerque, NM 87102, 505–727–8800 / 800–999–LABS
SmithKline Beecham Clinical Laboratories, 3175 Presidential Dr., Atlanta, GA 30340, 770–452–1590 (formerly: SmithKline Bio-Science Laboratories)
SmithKline Beecham Clinical Laboratories, 8000 Sovereign Row, Dallas, TX 75247, 214–637–7236 (formerly: SmithKline Bio-Science Laboratories)
SmithKline Beecham Clinical Laboratories, 801 East Dixie Ave., Leesburg, FL 34748, 352–787–9006, (formerly: Doctors & Physicians Laboratory)
SmithKline Beecham Clinical Laboratories, 400 Egypt Rd., Norristown, PA 19403, 800–877–7484 / 610–631–4600, (formerly: SmithKline Bio-Science Laboratories)
SmithKline Beecham Clinical Laboratories, 506 E. State Pkwy., Schaumburg, IL 60173, 847–447–4379/800–447–4379, (formerly: International Toxicology Laboratories)
SmithKline Beecham Clinical Laboratories, 7600 Tyrone Ave., Van Nuys, CA 91405, 818–989–2520 / 800–877–2520
South Bend Medical Foundation, Inc., 530 N. Lafayette Blvd., South Bend, IN 46601, 219–234–4176
Southwest Laboratories, 2727 W. Baseline Rd., Tempe, AZ 85283, 602–438–8507
Sparrow Health System, Toxicology Testing Center, St. Lawrence Campus, 1210 W. Saginaw, Lansing, MI 48915, 517–377–0520 (Formerly: St. Lawrence Hospital & Healthcare System)
St. Anthony Hospital Toxicology Laboratory, 1000 N. Lee St., Oklahoma City, OK 73101, 405–272–7052
Toxicology & Drug Monitoring Laboratory, University of Missouri Hospital & Clinics, 2703 Clark Lane, Suite B, Lower Level, Columbia, MO 65202, 573–882–1273
Toxicology Testing Service, Inc., 5426 N.W. 79th Ave., Miami, FL 33166, 305–593–2260
TOXWORX Laboratories, Inc., 6160 Variel Ave., Woodland Hills, CA 91367, 818–226–4373 / 800–966–2211, (formerly: Laboratory Specialists, Inc.; Abused Drug Laboratories; MedTox Bio-Analytical, a Division of MedTox Laboratories, Inc.)
UNILAB, 18408 Oxnard St., Tarzana, CA 91356, 800–492–0800 / 818–996–7300, (formerly: MetWest-BPL Toxicology Laboratory)
Universal Toxicology Laboratories, LLC, 10210 W. Highway 80, Midland, Texas 79706, 915–561–8851 / 888–953–8851
UTMB Pathology-Toxicology Laboratory, University of Texas Medical Branch, Clinical Chemistry Division, 301 University Boulevard, Room 5.158, Old John Sealy, Galveston, Texas 77555–0551, 409–772–3197

The Standards Council of Canada (SCC) Laboratory Accreditation Program for Substances of Abuse (LAPSA) has been given deemed status by the Department of Transportation. The SCC has accredited the following Canadian laboratories for the conduct of forensic urine drug testing required by Department of Transportation regulations:

Dynacare Kasper Medical Laboratories, 14940–123 Ave., Edmonton, Alberta, Canada T5V 1B4, 800–661–9876 / 403–451–3702
Gamma-Dynacare Medical Laboratories, A Division of the Gamma-Dynacare Laboratory Partnership, 245 Pall Mall St., London, ON, Canada N6A 1P4, 519–679–1630
MAXXAM Analytics Inc., 5540 McAdam Rd., Mississauga, ON, Canada L4Z 1P1, 905–890–2555 (formerly: NOVAMANN (Ontario) Inc.)

The following laboratory is voluntarily withdrawing from the National Laboratory Certification Program on May 1, 1998:

Harrison Laboratories, Inc., 9930 W. Highway 80, Midland, TX 79706, 800–725–3784 / 915–563–3300 (formerly: Harrison & Associates Forensic Laboratories)

Richard Kopanda,

Executive Officer, Substance Abuse and Mental Health Services Administration.

[FR Doc. 98–12167 Filed 5–6–98; 8:45 am]

BILLING CODE 4160–20–U

DEPARTMENT OF THE INTERIOR

Fish and Wildlife Service

Comprehensive Conservation Plans; Availability, Etc: Noxubee National Wildlife Refuge, MS

ACTION: Notice of intent to prepare a comprehensive conservation plan for Noxubee National Wildlife Refuge in Noxubee, Winston, and Oktibbeha counties, Mississippi, and notice of meeting to seek public participation.

SUMMARY: This notice advises the public that the Fish and Wildlife Service, Southeast Region, intends to gather information necessary to prepare a comprehensive conservation plan and an environmental document (environmental assessment) for Noxubee National Wildlife Refuge in Noxubee, Winston, and Oktibbeha counties, Mississippi. The Service is furnishing this notice in compliance with Service comprehensive conservation plan policy and the National Environmental Policy Act and implementing regulations to achieve the following:

(1) advise other agencies and the public of our intentions, and

(2) obtain suggestions and information on the scope of issues, opportunities, and concerns for inclusion in the environmental documents.

DATES: The Service will hold a public scoping meeting at 7 p.m., May 12, 1998, in the Tully Auditorium, Forestry and Wildlife Building, Mississippi State University, Starkville, Mississippi. A second public meeting will be held to review the draft comprehensive conservation plan. It is anticipated that the draft will be available for public

review by August 1998. An announcement of the meeting will appear in the **Federal Register**.

ADDRESSES: Address comments and requests for more information to: Refuge Manager, Noxubee National Wildlife Refuge, Route 1, Box 142, Brooksville, Mississippi 39739.

SUPPLEMENTARY INFORMATION: It is the policy of the Fish and Wildlife Service to have all lands within the National Wildlife Refuge System managed in accordance with an approved comprehensive conservation plan. The plan guides management decisions and identifies refuge goals, objectives, and strategies for achieving refuge purposes. Public input into this planning process is encouraged. The plan will provide other agencies and the public with a clear understanding of the desired conditions of the refuge and how the Service will implement management strategies. The Service began the comprehensive management planning process for Noxubee National Wildlife Refuge in March 1998.

Some of the issues to be addressed in the plan include the following:

(a) public use management;

(b) habitat management;

(c) wildlife population management; and

(d) cultural resource identification and protection.

Alternatives that address the issues and management strategies associated with these topics will be included in the environmental document.

The refuge was established in 1940, to provide a refuge and breeding ground for migratory birds and other wildlife. The refuge is located in eastern Mississippi and consists of 47,879 acres.

Dated: May 1, 1998.

Sam D. Hamilton,

Regional Director.

[FR Doc. 98–12238 Filed 5–6–98; 8:45 am]

BILLING CODE 4310–55–P

DEPARTMENT OF THE INTERIOR

Fish and Wildlife Service

Notice of Intent To Prepare a Programmatic Environmental Impact Statement/ Environmental Impact Report on the Natural Community Conservation Plan/Habitat Conservation Plan for the South Subregion of Orange County, CA; and Announcement of Public Scoping Meeting

AGENCY: Fish and Wildlife Service, Interior.

ACTION: Notice of intent; notice of public meeting.

SUMMARY: This notice advises the public that the Fish and Wildlife Service (Service) intends to gather information necessary to prepare a joint Environmental Impact Statement/ Environmental Impact Report (Impact Statement/Report) for an anticipated incidental take permit application from the Environmental Management Agency, County of Orange (County), California. The Service has been notified by the County that they intend to prepare a Natural Community Conservation Plan/Habitat Conservation Plan (Conservation Plan) to conserve coastal sage scrub and adjacent habitats in the South Subregion of Orange County. Interested persons are encouraged to attend a public scoping meeting to identify and discuss issues and alternatives that should be addressed in the Conservation Plan and in the Impact Statement/Report. This notice is provided as required by the Endangered Species Act of 1973, as amended, and the National Environmental Policy Act regulations.

DATES: A joint public scoping meeting will be held on May 14, 1998, from 7:00 p.m. to 9:00 p.m. Written comments related to the scope and content of the Conservation Plan and Impact Statement/Report should be received by the Service at the Carlsbad address below by June 8, 1998.

ADDRESSES: The public meeting will be held at San Clemente High School, Little Theater, 700 Avenida Pico, San Clemente, California 92673. Oral and written comments will be taken at the meeting. Written comments also may be mailed to Mr. Jim Bartel, Assistant Field Supervisor, Carlsbad Fish and Wildlife Office, 2730 Loker Avenue West, Carlsbad, California 92008; or sent by facsimile to (760) 431–9624.

FOR FURTHER INFORMATION CONTACT: Mr. John Bradley, Fish and Wildlife Biologist, Carlsbad Fish and Wildlife Office, Carlsbad, California; telephone (760) 431–9440.

SUPPLEMENTARY INFORMATION:

Availability of Documents

Background material may be obtained by contacting the County Environmental Management Agency, Planning and Zoning Administrator, 300 N. Flower Street, Santa Ana, California 92702. Documents also will be available for public inspection by appointment during normal business hours (8:00 a.m. to 5:00 p.m. Monday through Friday), at the Service's Carlsbad office (see **ADDRESSES**).

Background

The County intends to prepare a Conservation Plan pursuant to the State of California's Natural Community Conservation Planning Act of 1991 and the Endangered Species Act of 1973, as amended. The purpose of the statewide Natural Community Conservation Planning Program is to provide for subregional and regional protection of natural diversity, while allowing compatible and appropriate development within the Natural Community Conservation Planning subregion. This program intends that these goals be achieved through the development and implementation of Natural Community Conservation Plans. The program is designed to provide an alternative to single-species conservation efforts by formulating natural community-based habitat protection programs on a regional basis to protect the numerous species inhabiting each of the targeted communities. The Natural Community Conservation Planning process is sponsored jointly by the California Resources Agency and California Department of Fish and Game, and is conducted in cooperation with the Service pursuant to a Memorandum of Understanding between Fish and Game and the Service dated December 4, 1991.

The proposed Conservation Plan would identify those actions necessary to maintain the viability of the remaining coastal sage scrub habitat for the three ''target species'' residing in coastal sage scrub habitats in accordance with the State's Conservation Guidelines. The target species are the threatened California gnatcatcher (*Polioptila californica californica*), cactus wren (*Campylorhynchus brunneicapillus*), and orange-throated whiptail lizard (*Cnemidophorus hyperythrus beldingi*). The Conservation Plan would treat the three target species as listed species and would be subject to the standards set forth in section 10(a)(1)(B) of the Endangered Species Act, and 50 CFR 17.32(b) and 17.22(b). In addressing the habitat needs of the three target species, the Conservation Plan would benefit other species that may be addressed as species receiving regulatory coverage pursuant to the provisions of the Natural Community Conservation Planning Act and section 10(a)(1)(B) of the Endangered Species Act. The Natural Community Conservation Plan would function as a multiple species conservation plan that could establish the basis for maintaining the viability of the remaining coastal sage scrub

ecosystem and other habitats at the community level.

If the Conservation Plan is approved by the Service, the Service would authorize incidental take of the coastal California gnatcatcher through the special section 4(d) rule (60 FR 36010) via the Service's issued written concurrence that the Conservation Plan meets the standards set forth in 50 CFR 17.32(b)(2). In addition, the Service, at the request of the County, would simultaneously issue an Endangered Species Act section 10(a)(1)(B) permit. The Conservation Plan, coupled with an implementation agreement, likely would form the basis for issuing an incidental take permit for the cactus wren and orange-throated whiptail lizard, and any additional species proposed for regulatory coverage should these species subsequently be listed.

The proposed agenda for the facilitated public meeting includes a summary of the proposed action, status of and threats to subject species, tentative issues, concerns, opportunities and alternatives. Attendees of the scoping meeting will have an opportunity to discuss the specific coastal sage scrub conservation goals and conservation planning alternatives and other aspects of the proposed Conservation Plan and related Impact Statement/Report. Submittal of independent written comments is encouraged.

This notice is provided as required by the Endangered Species Act of 1973, as amended (16 USC 1531 *et seq.*, 50 CFR 17.22), and National Environmental Policy Act (40 CFR 1501.7) regulations.

Dated: May 1, 1998.

David J. Wesley,

Acting Regional Director, Region 1, Portland, Oregon.

[FR Doc. 98–12111 Filed 5–6–98; 8:45 am]

BILLING CODE 4310–55–P

DEPARTMENT OF THE INTERIOR

Geological Survey

Technology Transfer Act of 1986; Cooperative Research and Development Agreement With U.S. Army Topographic Engineering Center, Alexandria, VA and EarthData Technologies, LLC, Hagerstown, MD

AGENCY: Geological Survey, Interior.

ACTION: Notice of proposed Cooperative Research and Development Agreement (CRADA) negotiations.

SUMMARY: The United States Geological Survey (USGS) is planning to enter into a Cooperative Research and Development Agreement (CRADA) with the U.S. Army Topographic Engineering Center, Alexandria, Virginia and EarthData Technologies, LLC, Hagerstown, Maryland. The purpose of the CRADA is to jointly research and develop a camera calibration methodology and capability for digital airborne cameras. Any other organization interested in pursuing the possibility of a CRADA for similar kinds of activities should contact the USGS.

ADDRESSES: Inquiries may be addressed to the Acting Chief of Research, U.S. Geological Survey, National Mapping Division, 500 National Center, 12201 Sunrise Valley Drive, Reston, Virginia 20192; Telephone (703) 648–4643, facsimile (703) 648–4706; Internet ''ebrunson@usgs.gov''.

FOR FURTHER INFORMATION CONTACT: Ernest B. Brunson, address above.

SUPPLEMENTARY INFORMATION: This notice is to meet the USGS requirement stipulated in the Survey Manual.

Dated: April 20, 1998.

Richard E. Witmer,

Chief, National Mapping Division.

[FR Doc. 98–12091 Filed 5–6–98; 8:45 am]

BILLING CODE 4310–17–M

DEPARTMENT OF THE INTERIOR

Bureau of Land Management

[WO–350–4210–01]

Extension of Approved Information Collection, OMB Number 1004–0107

AGENCY: Bureau of Land Management, Interior.

ACTION: Notice and request for comments.

SUMMARY: In accordance with the Paperwork Reduction Act of 1995, the Bureau of Land Management (BLM) is announcing its intention to request an extension of existing approval to collect certain information from respondents identified in 43 CFR 2800 and 2880. This information is in addition to that collected on the Form SF–299, OMB No. 1004–0060, and is necessary for those large complex projects which require a right-of-way. The authorization for such collection is provided by the 2800 and 2880 regulations. On multi-million dollar energy production and transmission projects, and complex communication sites for which a right-of-way is required, information over and above that provided on the application form is required such as construction and other plans; a more detailed map; specific certificates, permits, and approvals from other agencies; and any other necessary information relative to the completion of the project.

DATES: Comments on the proposed information collection must be received by July 6, 1998 to be assured of consideration.

ADDRESSES: Comments may be mailed to: Director (420), Bureau of Land Management, 1849 C Street NW., Room 401LS, Washington, DC 20240.

Comments may be sent via Internet to: WoComment@wo.blm.gov. Please include ''Attn: 1004–0107'' and your name and return address in your Internet message.

Comments may be hand-delivered to the Bureau of Land Management Administrative Record, Room 401, 1620 L Street, NW., Washington, DC.

Comments will be available for public review at the L Street address during regular business hours (7:45 a.m. to 4:15 p.m), Monday through Friday.

FOR FURTHER INFORMATION CONTACT: Carl C. Gammon, (202) 452–7777.

SUPPLEMENTARY INFORMATION: In accordance with 5 CFR 1320.12(a), BLM is required to provide 60-day notice in the **Federal Register** concerning a collection of information contained in a published current rule to solicit comments on: (a) Whether the proposed collection of information is necessary for the proper performance of the functions of the agency, including whether the information will have practical utility, (b) the accuracy of the agency's estimate of the burden of the proposed collection of information, including the validity of the methodology and assumptions used; (c) ways to enhance the quality, utility, and clarity of the information to be collected; and (d) ways to minimize the burden of the collection of information on those who are respond, including through the use of appropriate automated, electronic, mechanical, or other technological collection techniques or other forms of information technology. The BLM will review and analyze any comments sent in response to this notice and include them with its request for approval from the Office of Management and Budget under 44 U.S.C. 3501 *et seq.*

BLM grants rights-of-way on public lands through the authority of Title V of the FLPMA, 90 Stat. 2776, 43 U.S.C. 1761 and the Mineral Leasing Act (MLA) of 1920, as amended, 30 U.S.C. 185. Information in addition to that collected on the right-of-way form (SF–299) is needed for large complex projects.There is no standard form for the collection of this required additional information. The authorization for such collection is provided by the 2800 and

2880 regulations. The information required in 43 CFR Parts 2800 and 2880 is needed to enable the BLM to determine whether or not a right-of-way may be granted, to establish the terms and conditions of the grant and to administer the grant when it is made.

Additional information in the form of construction and other plans; detailed maps; certification, permits and approvals required by other agencies; and other information necessary for the completion of the project are authorized by 43 CFR 2802.4, 2881.2, and 2882.3. Each right-of-way is an individual situation and the information collected is specific to that individual proposal and only available from the applicant. Additional information in the form of a plan may be required. This plan is a product of the NEPA requirements. It is a useful working tool that enables both the BLM and the applicant to have a common understanding on how the project will proceed. An as-built map may also be required. These maps show greater detail than the basic location map required to be submitted with the application. A more exact location of the holder's right-of-way and related facilities will give the holder more protection for their improvements. The BLM also requires assurance that certifications, permits, and approvals required by others and identified during the NEPA analysis process have been obtained. A detailed description of alternative routes considered by the applicant when developing the proposal may be required and is used by the BLM to gain insight into the complexities and conflicts of the proposals. Statements of need and economic feasibility and of the environmental, social, and economic effects of the proposal may be requested and assist the BLM in evaluating the proposal with respect to NEPA compliance. If the BLM fails to properly collect the required information including plans, construction schedules, maps specific certificates, permits, and approvals necessary for the completion of the project, the BLM will reject the right-of-way application.

Based on BLM's experience administering the activities described above, approximately 25 percent of the 4,000 applications the BLM receives annually require additional information collection. The applicants are usually large companies that seek to construct large complex projects on public lands which require a right-of-way. The public reporting burden for the information collected is estimated to average 16.8 hours per response. The frequency of response is once. The estimated total annual burden on new respondents is about 16,800 hours.

All responses to this notice will be summarized and included in the request for Office of Management and Budget approval. All comments will also become a matter of public record.

Dated: April 29, 1998.

Carol J. Smith,

Bureau of Land Management Clearance Officer.

[FR Doc. 98–12164 Filed 5–6–98; 8:45 am]

BILLING CODE 4310–84–M

DEPARTMENT OF THE INTERIOR

Bureau of Land Management

[OR–938–6330–01 24 1A]

Information Collection Submitted to the Office of Management and Budget for Review Under the Paperwork Reduction Act

The Bureau of Land Management (BLM) has submitted the proposed collection of information listed below of the Office of Management and Budget (OMB) for approval under the provisions of the Paperwork Reduction Act, 44 U.S.C. 3501 *et seq.*). On February 26, 1998, BLM published a notice in the **Federal Register** (63 FR 9857) requesting comments on this proposed collection. The comment period ended on April 28, 1998. No comments were received from the public in response to that notice. Copies of the proposed collection of information and explanatory material may be obtained by contacting the BLM clearance officer at the telephone number listed below.

OMB is required to respond to this request within 60 days but may respond after 30 days. For maximum consideration, your comments and suggestions on the proposed requirement should be made within 30 days directly to the Office of Management and Budget, Interior Department Desk Officer (1004–0173), Office of Information and Regulatory Affairs, Washington, D.C. 20503, telephone: (202) 395–7340. Please provide a copy of your comments to the Bureau Clearance Officer (WO–630), 1849 C St., N.W., Washington, D.C. 20240.

Nature of Comments: We specifically request your comments on the following:

1. Whether collecting the information is necessary for BLM's proper functioning, including whether the information will have practical utility;

2. The accuracy of BLM's estimate of the burden of collecting the information, including the validity of the methodology and assumptions used;

3. The quality, utility, and clarity of the information to be collected; and

4. How to minimize the burden of collecting the information on those who are to respond, including the use of appropriate automated electronic, mechanical, or other forms of information technology.

Title: Jobs-in-the-Woods Employment Evaluation.

OMB Approval Number: 1004–0173.

Abstract: The Jobs-in-the-Woods Program is part of the Administration's Northwest Forest Initiative. It seeks to reduce the impact of loss of jobs caused by decreased logging on Federal forests in the Pacific Northwest by providing money for contracts to restore the environment. The BLM asks for four items of information in each Jobs-in-the-Woods Program contract that if issues. Each contractor asks for four items of information in each Jobs-in-the-Woods Program contract that if issues. Each contractor provides information at the close of the contract, as a condition of receiving final payment, about the number of workers employed on the contract, including managers; the number of days those workers worked on the contract; the total amount of wages and benefits paid to the workers; and the number of workers, if any, considered to be displaced timber workers. The BLM uses the information to gauge the effectiveness of the program in employing displaced timber workers.

Bureau Form Number: None.

Frequency: Once, at the closing of the contract.

Description of Respondents: Respondents are holders of contracts funded by the Jobs-in-the-Woods Program, generally small businesses.

Annual Responses: 200.

Annual Burden Hours: 100.

Collection Clearance Officer: Carole Smith, (202) 452–0367.

Dated: April 29, 1998.

Carole Smith,

Bureau of Land Management, Information Clearance Officer.

[FR Doc. 98–12163 Filed 5–6–98; 8:45 am]

BILLING CODE 4310–84–M

DEPARTMENT OF THE INTERIOR

Bureau of Land Management

[AZ–060–1040–00]

Call for Nominations for the San Pedro Riparian National Convention Area Advisory Committee

AGENCY: Bureau of Land Management, Interior.

ACTION: Call for nominations for the San Pedro Riparian National Conservation Area Advisory Committee.

SUMMARY: The purpose of this notice is to solicit public nominations to fill seven positions on the San Pedro Riparian National Conservation Area Advisory Committee, which was established pursuant to Section 104 of the Arizona-Idaho Conservation Act of 1988, Pub. L. 100–696.

DATES: Nominations must be received by June 30, 1998.

ADDRESSES: Bureau of Land Management, Tucson Field Office, 12661 E. Broadway Blvd., Tucson, AZ 85748.

FOR FURTHER INFORMATION CONTACT: Bill Childress, Program Manager, at (520) 458–3559.

SUPPLEMENTARY INFORMATION: The Committee is comprised of seven members. Nominees to fill some of these positions will serve three-year terms ending December 31, 2001. Other members will serve shorter terms consistent with the committee's staggered-term arrangement. Nominations for two positions of the seven positions will be submitted by the Arizona Governor's Office and the Cochise County Board of Supervisors. Anyone interested in filling either of those two positions should submit their name to those offices for consideration. The Secretary of the Interior, pursuant to this call, will ensure continued representation of specific categories of interest on the Committee. Nominees must be persons with recognized expertise in recreation, wildlife conservation, archaeology, paleontology, water resources, riparian ecology or other disciplines directly related to the primary purpose for which the conservation area was created.

The purpose of the Committee is to provide informed advice to the BLM's Tucson Field Manager on the management of the San Pedro Riparian National Conservation Area, as required by Section 103 of the Arizona-Idaho Conservation Act of 1988, Pub. L. 10–696.

Members will serve without salary, but will be reimbursed for travel and per diem expenses at current rates for government employees. The Committee normally meets at least twice yearly. Additional meetings may be called by the Field Manager or representative in connection with special needs for advice.

Persons wishing to serve on the Committee, or to nominate individuals to serve, must do so in writing. Each nomination must include the name, address, and phone number of the nominee along with biographical information such as education, profession, experience, and interests related to management of the Conservation Area. Nominations should be addressed to the Bureau of Land Management, Tucson Field Office, Tucson Field Manager, 12661 E. Broadway Blvd., Tucson, AZ 85748.

Dated: April 28, 1998.

Jesse J. Juen,

Field Manager.

[FR Doc. 98–12088 Filed 5–6–98; 8:45 am]

BILLING CODE 4310–32–M

DEPARTMENT OF THE INTERIOR

Bureau of Land Management

[OR–050–1120–00: GP8–0180]

Notice of availability Northeast Oregon assembled land exchange Final Environmental Impact Statement

AGENCY: Prineville District Office, Central Oregon Resource Area.

ACTION: Notice of availability, Northeast Oregon assembled land exchange Final Environmental Impact Statement (FEIS).

SUMMARY: In accordance with section 102(c) of the National Environmental Policy Act, the Prineville and Vale Districts have prepared a FEIS analyzing the potential environmental impacts of a proposed land exchange in Grant, Umatilla, Morrow, Wheeler and Union counties. The FEIS is expected to be available for review on or about May 20, 1998.

Clearwater Land Exchange has proposed to trade lands within and adjacent to both the North and South Forks of the John Day River for scattered tracts of public land located in the above mentioned counties. Other tracts yet to be identified would be acquired within the Vale District in future phases of the exchange.

DATES: This notice announces the beginning of the 30 day comment period. The comment period will officially close 30 days from the date the U.S. Environmental Protection Agency publishes its notice of availability of the FEIS.

ADDRESSES: Comments on the FEIS should be sent to James Hancock, Prineville District Manager, BLM, P.O. Box 550, Prineville, OR. 97754.

FOR FURTHER INFORMATION CONTACT: To obtain additional information or to get a copy of the FEIS, contact Steve Davidson at (541)–523–1349 or Ron Lane at (541)–416–6752.

SUPPLEMENTARY INFORMATION: Those individuals, organizations, Native American tribes, agencies and other governments with a known interest in the proposal have been sent a copy of the FEIS.

Dated: April 28, 1998.

James L. Hancock,

District Manager,

[FR Doc. 98–12162 Filed 5–6–98; 8:45 am]

BILLING CODE 4310–33–M

DEPARTMENT OF THE INTERIOR

Bureau of Land Management

[OR–958–1430–01; GP7–0070; OR–22155 (WA)]

Public Land Order No. 7328; Revocation of Executive Order Dated October 29, 1910; Washington

AGENCY: Bureau of Land Management, Interior.

ACTION: Public Land Order.

SUMMARY: This order revokes an Executive order in its entirety, as it affects the remaining 20.36 acres of public lands withdrawn for Bureau of Land Management Powersite Reserve No. 158. The lands are no longer needed for the purpose for which they were withdrawn. This action will open 11.38 acres to surface entry. The remaining 8.98 acres are included in an overlapping withdrawal and will remain closed to surface entry. All of the lands have been and will remain open to mining and mineral leasing.

EFFECTIVE DATE: August 6, 1998.

FOR FURTHER INFORMATION CONTACT: Betty McCarthy, BLM Oregon/Washington State Office, P.O. Box 2965, Portland, Oregon 97208–2965, 503–952–6155.

By virtue of the authority vested in the Secretary of the Interior by Section 204 of the Federal Land Policy and Management Act of 1976, 43 U.S.C. 1714 (1994), it is ordered as follows:

1. The Executive Order dated October 29, 1910, which established Powersite Reserve No. 158, is hereby revoked in its entirety:

Willamette Meridian

T. 32 N., R. 9 E.,

Sec. 24, lots 15 to 19, inclusive, and those portions of lots 9 and 12 lying in the W½NE¼.

The areas described aggregate approximately 20.36 acres in Snohomish County.

2. The following described lands are included in the Skagit Wild and Scenic River withdrawal, and will remain closed to surface entry:

Willamette Meridian

T. 32 N., R. 9 E.,

Sec. 24, lots 16 to 19, inclusive, and a portion of lot 12.

The areas described aggregate approximately 8.98 acres in Snohomish County.

3. At 8:30 a.m. on August 6, 1998, the lands described in paragraph 1, except as provided by paragraph 2, will be opened to the operation of the public land laws generally, subject to valid existing rights, the provisions of existing withdrawals, other segregations of record, and the requirements of applicable law. All valid applications received at or prior to 8:30 a.m., on August 6, 1998, shall be considered as simultaneously filed at that time. Those received thereafter shall be considered in the order of filing.

4. The State of Washington has a preference right for public highway rights-of-way or material sites for a period of 90 days from the date of publication of this order and any location, entry, selection, or subsequent patent shall be subject to any rights granted the State as provided by the Act of June 10, 1920, Section 24, as amended, 16 U.S.C. 818 (1994).

Dated: April 17, 1998.

Bob Armstrong,

Assistant Secretary of the Interior.

[FR Doc. 98–12159 Filed 5–6–98; 8:45 am]

BILLING CODE 4310–33–P

DEPARTMENT OF THE INTERIOR

Bureau of Land Management

[MT–926–08–1420–00]

Montana: Filing of Plat of Survey

AGENCY: Bureau of Land Management, Montana State Office, Interior

ACTION: Notice.

SUMMARY: The plats of survey of the following described land are scheduled to be officially filed in the Montana State Office, Billings, Montana, thirty (30) days from the date of this publication.

The plat, representing the survey of an island in the Missouri River, Township 2 North, Range 2 East, Principal Meridian, Montana, was accepted April 16, 1998.

The plat, in two sheets, representing the dependent resurvey of a portion of the south and east boundaries, a portion of the subdivisional lines, the adjusted original meanders of the right and left banks of the Missouri River through sections 12, 22, and 34, the subdivision of sections 12, 22, and 34, and the survey of certain islands in the Missouri River, Township 3 North, Range 2 East, Principal Meridian, Montana, was accepted April 16, 1998.

The plat, in two sheets, representing the dependent resurvey of a portion of the east boundary, a portion of the subdivisional lines, the adjusted original meanders of the right and left banks of the Missouri River through sections 2, 12, and 24, the subdivision of sections 2, 12, and 24, and the survey of certain islands in the Missouri River, Township 4 North, Range 2 East, Principal Meridian, Montana. This same plat, in two sheets, also representing the dependent resurvey of a portion of the subdivisional lines, the adjusted original meanders of the right and left banks of the Missouri River through sections 6 and 18, the subdivision of sections 6 and 18, and the survey of certain islands in the Missouri River, Township 4 North, Range 3 East, Principal Meridian, Montana, was accepted April 16, 1998.

The plat, representing the survey of certain islands in the Missouri River, Township 5 North, Range 2 East, Principal Meridian, Montana, was accepted April 16, 1998.

The plat, representing the dependent resurvey of portions of the First Standard Parallel North, the west boundary, the subdivisional lines, the adjusted original meanders of the right and left banks of the Missouri River, and the subdivision of section 31, Township 5 North, Range 3 East, Principal Meridian, Montana, was accepted April 16, 1998.

The plat, representing the dependent resurvey of portions of the north boundary, subdivisional lines, and certain boundaries of Amended Mineral Survey Nos. 5090A and 5090B, Placers, Township 6 North, Range 1 East, Principal Meridian, Montana, was accepted April 16, 1998.

The plat, in two sheets, representing the dependent resurvey of portions of the west boundary, subdivisional lines, the adjusted original meanders of the right and left banks of the Missouri River through sections 7, 8, 17, 18, 20, and 28, the subdivision of sections 7, 17, 20, and 28, and the survey of certain islands in the Missouri River, Township 6 North, Range 2 East, Principal Meridian, Montana, was accepted April 16, 1998.

This survey was executed at the request of the Bureau of Land Management, Headwaters Resource Area and was necessary to identify omitted islands. Copies of the preceding described plats will be immediately placed in the open files and will be available to the public as a matter of information.

If a protest against this survey, as shown on these plats, is received prior to the date of the official filing, the filing will be stayed pending consideration of the protest. This particular plat will not be officially filed until the day after all protests have been accepted or dismissed and become final or appeals from the dismissal affirmed.

FOR FURTHER INFORMATION CONTACT: Bureau of Land Management, 222 North 32nd Street, P.O. Box 36800, Billings, Montana 59107–6800.

Dated: April 28, 1998.

Steven G. Schey,

Acting Chief Cadastral Surveyor, Division of Resources.

[FR Doc. 98–12185 Filed 5–6–98; 8:45 am]

BILLING CODE 4310–DN–P

DEPARTMENT OF THE INTERIOR

Minerals Management Service

Preparation of an Environmental Assessment for Proposed Outer Continental Shelf Oil and Gas Lease Sale 172 in the Central Gulf of Mexico (March 1999)

AGENCY: Minerals Management Service.

ACTION: Preparation of an environmental assessment (EA).

SUMMARY: The Minerals Management Service (MMS) is beginning preparation of an environmental assessment (EA) for proposed Outer Continental Shelf (OCS) Oil and Gas Lease Sale 172 (scheduled for March 1999) in the Central Gulf of Mexico Planning Area (CPA). In August 1996, the MMS issued a Call for Information and Nominations/Notice of Intent to Prepare an EIS (Call/NOI) for all five proposed Central Gulf of Mexico oil and gas sales in the current 5-year leasing program. In 1997, MMS prepared a single EIS for all five sales. The multisale final EIS, filed in November 1997, included an analysis of a single, ''typical'' oil and gas sale and a cumulative analysis that included the effects of holding all five sales, as well as the cumulative effects of the long-term development of the planning area. The MMS stated in the EIS that an EA would be prepared for each lease sale after the first sale covered in the EIS (Sale 169).

The preparation of this EA is the first step in the prelease decision process for Sale 172. The proposed action and alternatives for Sale 172 were identified by the Director of MMS in November 1996 following the Call/NOI and were analyzed in the Central Gulf multisale

EIS, which is available from the Gulf of Mexico OCS Region's Public Information Office at 1–800–200–GULF. The proposed action to be analyzed in this EA is the offering of all available unleased acreage in the CPA. The EA will also analyze alternatives to defer blocks south and within 15 miles of Baldwin County, Alabama, and to defer blocks containing topographic features with sensitive biological resources, as well as analyzing the no action alternative. The analysis in the EA will reexamine the potential environmental effects of the proposed action and alternatives based on any new information regarding potential impacts and issues that was not available at the time the final EIS was prepared.

The MMS requests interested parties to submit comments regarding any such new information or issues that should be addressed in the EA to the Minerals Management Service (MS 5410), Gulf of Mexico OCS Region, 1201 Elmwood Park Boulevard, New Orleans, Louisiana 70123–2394 by June 5, 1998. After completion of the EA, MMS will determine whether to prepare a Finding of No Significant Impact (FONSI) or a supplemental EIS. The MMS will then prepare and send to the affected States consistency determinations, which the States will review to determine whether the proposed sale is consistent with federally-approved State coastal zone management programs. The MMS will also send a proposed Notice of Sale to the Governors for their comments on the size timing, and location of the proposed sale. The tentative schedule for the steps in the prelease decision process for Sale 172 is listed below:

Comments due to MMS, June 5, 1998;

EA/FONSI or Supplemental EIS, October 1998;

Proposed Notice of Sale sent to Governors, October 1998;

Consistency Determinations sent to States, October 1998;

Final Notice of Sale, February 1999; and

Sale, March, 1999.

FOR FURTHER INFORMATION: Gulf of Mexico OCS Region, Minerals Management Service, 1201 Elmwood Park Boulevard, New Orleans, Louisiana 70123–2394, Mr. George Hampton, Telephone (504) 736–2465.

Dated: May 1, 1998.

Carolita U. Kallaur,

Associate Director for Offshore Minerals Management.

[FR Doc. 98–12184 Filed 5–6–98; 8:45 am]

BILLING CODE 4310–MR–U

DEPARTMENT OF THE INTERIOR

Minerals Management Service

Notice for Meeting of the Royalty Policy Committee of the Minerals Management Advisory Board

AGENCY: Minerals Management Service, Interior.

ACTION: Notice of meeting cancellation.

SUMMARY: The meeting of the Royalty Policy Committee, on the Minerals Management Advisory Board, scheduled for May 19, 1998, in Lakewood, Colorado, at the Sheraton Denver West is canceled and will be rescheduled for July 1998. The location and dates of the July meeting will be published in the **Federal Register**.

FOR FURTHER INFORMATION CONTACT: Mr. Michael A. Miller, Chief, Program Services Office, Royalty Management Program, Minerals Management Service, P.O. Box 25165, MS 3060, Denver, CO 80225–0165, telephone number (303) 231–3413, fax number (303) 231–3362.

SUPPLEMENTARY INFORMATION: The Secretary of the Department of the Interior (Department) has established a Royalty Policy Committee, on the Minerals Management Advisory Board, to provide advice on the Department's management of Federal and Indian minerals leases, revenues, and other minerals related policies. Committee membership includes representatives from States, Indian Tribes and allottee organizations, minerals industry associations, the general public, and Federal Department.

The May 19, 1998, meeting, which was announced in the **Federal Register** on April 22, 1998 (63 FR 19939), is hereby canceled. The location and dates of future meetings will be published in the **Federal Register**. The meetings will be open to the public without advanced registration. Public attendance may be limited to the space available.

These meetings are being held by the authority of the Federal Advisory Committee Act, Pub. L. No. 92–463, 5 U.S.C. Appendix 1, and Office of Management and Budget Circular No. A–63, revised.

Dated: May 1, 1998.

Lucy Querques Denett,

Associate Director for Royalty Management.

[FR Doc. 98–12154 Filed 5–6–98; 8:45 am]

BILLING CODE 4310–MR–P

INTERNATIONAL TRADE COMMISSION

[USITC SE–98–007]

Sunshine Act Meeting

AGENCY HOLDING THE MEETING: United States International Trade Commission.

TIME AND DATE: May 18, 1998 at 2:00 p.m.

PLACE: Room 101, 500 E Street S.W., Washington, DC 20436.

STATUS: Open to the public.

MATTERS TO BE CONSIDERED:

1. Agenda for future meeting: none
2. Minutes
3. Ratification List
4. Inv. Nos. 731–TA–794–796 (Preliminary) (Emulsion Styrene Butadiene Rubber from Brazil, Korea, and Mexico)—briefing and vote.
5. Outstanding action jackets: none

In accordance with Commission policy, subject matter listed above, not disposed of at the scheduled meeting, may be carried over to the agenda of the following meeting:

By order of the Commission.

Issued: May 4, 1998.

Donna R. Koehnke,

Secretary.

[FR Doc. 98–12239 Filed 5–5–98; 10:55 am]

BILLING CODE 7020–02–M

INTERNATIONAL TRADE COMMISSION

[USITC SE–98–006]

Sunshine Act Meeting

AGENCY HOLDING THE MEETING: United States International Trade Commission.

TIME AND DATE: May 15, 1998 at 11:00 a.m.

PLACE: Room 101, 500 E Street S.W., Washington, DC 20436.

STATUS: Open to the public.

MATTERS TO BE CONSIDERED:

1. Agenda for future meeting: none
2. Minutes
3. Ratification List
4. Inv. Nos. 701–TA–375 and 731–TA–783 (Preliminary) (Extruded Rubber Thread from Indonesia)—briefing and vote.
5. Inv. Nos. 701–TA–376–379 and 731–TA–788–793 (Preliminary) (Stainless Steel Plate from Belgium, Canada, Italy, Korea, South Africa, and Taiwan)—briefing and vote.
5. Outstanding action jackets: none

In accordance with Commission policy, subject matter listed above, not disposed of at the scheduled meeting, may be carried over to the agenda of the following meeting:

By order of the Commission.

Issued: May 4, 1998.

Donna R. Koehnke,

Secretary.

[FR Doc. 98–12240 Filed 5–5–98; 10:55 am]

BILLING CODE 7020–02–M

DEPARTMENT OF LABOR

Office of the Secretary

President's Committee on the International Labor Organization; Closed Meeting

In accordance with section 10(a) of the Federal Advisory Committee Act (Pub. L. 92–463), announcement is hereby given of a meeting of the President's Committee on the ILO:

Name: President's Committee on the International Labor Organization.

Date: Wednesday, May 20, 1998.

Time: 2 p.m.

Place: U.S. Department of Labor, Third & Constitution Ave., N.W., Room S–2508, Washington, DC 20210.

Purpose: The meeting will include a review and discussion of current issues relating to United States' negotiating positions with member nations of the International Labor Organization. The meeting will concern matters the disclosure of which would seriously compromise the Government's negotiating objectives and bargaining positions. Accordingly, the meeting will be closed to the public, pursuant to section 9(B) of the Government in the Sunshine Act, 5 U.S.C. 552b(c)(9)(B).

For Further Information Contact: Mr. Andrew J. Samet, President's Committee on the International Labor Organization, U.S. Department of Labor, 200 Constitution Avenue, NW, Room S–2235, Washington, DC 20210, Telephone (202) 219–6043.

Signed at Washington, DC, this 1st day of May 1998.

Alexis M. Herman,

Secretary of Labor.

[FR Doc. 98–12130 Filed 5–6–98; 8:45 am]

BILLING CODE 4510–23–M

DEPARTMENT OF LABOR

Office of the Secretary

Privacy Act of 1974; Publication of Amendments to an Existing System of Records

AGENCY: Office of the Secretary, Labor.

ACTION: Notice of amendments to an existing system of records.

SUMMARY: The Privacy Act of 1974 requires that each agency publish notice of all of the systems of records that it maintains. This document proposes to revise the Routine Uses Category for one of the Department's existing systems of records. The proposed routine uses provide additional protection to the privacy interests of the participants in the studies which are conducted by system managers from the Department's Bureau of Labor Statistics (BLS). Finally, various administrative (non-substantive) changes are being made to this same system of records, including a change of name.

DATES: Persons wishing to comment on the proposed new routine uses may do so by June 8, 1998.

Effective Date: The proposed routine uses will become effective as proposed without further notice on June 16, 1998. The remaining amendments to this system are administrative (non-substantive), and therefore, will become effective on May 7, 1998.

ADDRESSES: Written comments may be mailed or delivered to Robert A. Shapiro, Associate Solicitor, Division of Legislation and Legal Counsel, 200 Constitution Avenue, NW., Room N–2428, Washington, DC 20210.

FOR FURTHER INFORMATION CONTACT: Miriam McD. Miller, Co-Counsel for Administrative Law, Office of the Solicitor, Department of Labor, 200 Constitution Avenue, NW., Room N–2428, Washington, DC 20210, telephone (202) 219–8188.

SUPPLEMENTARY INFORMATION: Pursuant to section three of the Privacy Act of 1974 (5 U.S.C. 552a(e)(4)), hereinafter referred to as the Act, the Department hereby proposes to amend the Routine Uses Category for one of the Department's existing systems of records. This document supplements this Department's last publication in full of all of its Privacy Act systems of records. On September 23, 1993, in Volume 58 at Page 49548 of the **Federal Register**, we published a notice containing 138 systems of records which were maintained under the Act. Subsequent publications of new systems were made on April 15, 1994 (59 FR 18156) (two new systems); on May 10, 1995 (60 FR 24897)(one new system); on June 15, 1995 (60 FR 31495)(one new system); on April 7, 1997 (62 FR 16610)(one new system); and on October 14, 1997 (62 FR 53343)(one new system).

1. The Department hereby proposes to amend an existing system of records, DOL/BLS–14, so that a revised Routine Uses Category can be substituted into this system of records. The revised Routine Uses Category will provide additional protection to the privacy interests of the participants in the various studies which are conducted by the system managers from the Bureau of Labor Statistics (BLS). These studies are conducted by the Behavioral Science Research Laboratory, a unit within BLS. This additional privacy protection, for the participants in the studies, is achieved by making several of the Universal Routine Uses, contained within the General Prefatory Statement, inapplicable to this system of records. DOL/BLS–14 was last published on September 23, 1993 at 58 FR 49593.

2. This document makes various administrative (non-substantive) changes to the above discussed system, DOL/BLS–14. Since these administrative amendments are non-substantive, public comment is not required. These changes merely refine the system. Included in these changes is a revised name for the system, which will be more descriptive than its current name.

Universal Routine Uses

In its September 23, 1993 publication, the Department gave notice of eleven paragraphs containing routine uses which apply to all of its systems of records, except for DOL/OASAM–5 and DOL/OASAM–7. These eleven paragraphs were presented in the General Prefatory Statement for that document, and it appeared at Pages 49554–49555 of Volume 58 of the **Federal Register**. Those eleven paragraphs were republished in an April 15, 1994 document in order to correct grammatical mistakes in the September 23, 1993 version. In the May 10, 1995, June 15, 1995, and April 7, 1997 publications, the General Prefatory Statement was republished as a convenience to the reader of the document. In an October 14, 1997 publication, the General Prefatory Statement was again republished in order to make a syntactical change to paragraph 10. It was also republished as a convenience to the reader on January 15, 1998 (63 FR 2417). We are again republishing the General Prefatory Statement as a convenience to the reader.

The public, the Office of Management and Budget (OMB), and the Congress are invited to submit written comments on the proposed amendment in this document. A report on the proposed revision to DOL/BLS–14, has been provided to OMB and to the Congress, as required by OMB Circular A–130, Revised, and 5 U.S.C. 552a(r). The administrative (non-substantive) amendments do not have to be submitted for comment to OMB and to the Congress.

General Prefatory Statement

The following routine uses apply to and are incorporated by reference into this system of records published below unless the text of a particular notice of a system of records indicates otherwise. These routine uses *do not* apply to DOL/OASAM–5, Rehabilitation and Counseling File, nor to DOL/OASAM–7, Employee Medical Records.

1. It shall be a routine use of the records in this system of records to disclose them to the Department of Justice when: (a) The agency or any component thereof; (b) any employee of the agency in his or her official capacity where the Department of Justice has agreed to represent the employee; or (c) the United States Government, is a party to litigation or has an interest in such litigation, and by careful review, the agency determines that the records are both relevant and necessary to the litigation and the use of such records by the Department of Justice is therefore deemed by the agency to be for a purpose that is compatible with the purpose for which the agency collected the records.

2. It shall be a routine use of the records in this system of records to disclose them in a proceeding before a court or adjudicative body, when: (a) The agency or any component thereof; (b) any employee of the agency in his or her official capacity; (c) any employee of the agency in his or her individual capacity where the agency has agreed to represent the employee; or (d) the United States Government, is a party to litigation or has an interest in such litigation, and by careful review, the agency determines that the records are both relevant and necessary to the litigation and the use of such records is therefore deemed by the agency to be for a purpose that is compatible with the purpose for which the agency collected the records.

3. When a record on its face, or in conjunction with other records, indicates a violation or potential violation of law, whether civil, criminal or regulatory in nature, and whether arising by general statute or particular program statute, or by regulation, rule, or order issued pursuant thereto, disclosure may be made to the appropriate agency, whether Federal, foreign, State, local, or tribal, or other public authority responsible for enforcing, investigating or prosecuting such violation or charged with enforcing or implementing the statute, or rule, regulation, or order issued pursuant thereto, if the information disclosed is relevant to any enforcement, regulatory, investigative or prosecutive responsibility of the receiving entity, and by careful review, the agency determines that the records are both relevant and necessary to the litigation and the use of such records is therefore deemed by the agency to be for a purpose that is compatible with the purpose for which the agency collected the records.

4. A record from this system of records may be disclosed to a Member of Congress or to a Congressional staff member in response to an inquiry of the Congressional office made at the written request of the constituent about whom the record is maintained.

5. Records from this system of records may be disclosed to the National Archives and Records Administration or to the General Services Administration for records management inspections conducted under 44 U.S.C. 2904 and 2906.

6. Disclosure may be made to agency contractors, or their employees, consultants, grantees, or their employees, or volunteers who have been engaged to assist the agency in the performance of a contract, service, grant, cooperative agreement or other activity related to this system of records and who need to have access to the records in order to perform the activity. Recipients shall be required to comply with the requirements of the Privacy Act of 1974, as amended, 5 U.S.C. 552a; see also 5 U.S.C. 552a(m).

7. The name and current address of an individual may be disclosed from any system of records to the parent locator service of the Department of HHS or to other authorized persons defined by Pub. L. 93–647 for the purpose of locating a parent who is not paying required child support.

8. Disclosure may be made to any source from which information is requested in the course of a law enforcement or grievance investigation, or in the course of an investigation concerning retention of an employee or other personnel action, the retention of a security clearance, the letting of a contract, the retention of a grant, or the retention of any other benefit, to the extent necessary to identify the individual, inform the source of the purpose(s) of the request, and identify the type of information requested.

9. Disclosure may be made to a Federal, State, local, foreign, or tribal or other public authority of the fact that this system of records contains information relevant to the hiring or retention of an employee, the granting or retention of a security clearance, the letting of a contract, a suspension or debarment determination or the issuance or retention of a license, grant, or other benefit.

10. A record from any system of records set forth below may be disclosed to the Office of Management and Budget in connection with the review of private relief legislation and the legislative coordination and clearance process.

11. Disclosure may be made to a debt collection agency that the United States has contracted with for collection services to recover debts owed to the United States.

I. Publication of a Proposed Amendment and Publication of Administrative (Non-Substantive) Changes

DOL/BLS–14, currently named as ''Collection Procedures Research Lab Project Files'', is proposed to be amended by revising the category for Routine Uses to read as set forth below. For the convenience of the reader, the entire system is being republished in full. At this time, the various administrative (non-substantive) amendments are being published as set forth below. One of the amendments revises the name of the system.

DOL/BLS–14

SYSTEM NAME:

BLS Behavioral Science Research Laboratory Project Files.

SECURITY CLASSIFICATION:

None.

SYSTEM LOCATION:

Offices in the Bureau of Labor Statistics National Office.

CATEGORIES OF INDIVIDUALS COVERED BY THE SYSTEM:

Individual respondents who participate in studies.

CATEGORIES OF RECORDS IN THE SYSTEM:

Records include respondent's name, name of study, biographic/personal information on the respondent, and test results and observations.

AUTHORITY FOR MAINTENANCE OF THE SYSTEM:

29 U.S.C. sec. 2.

PURPOSE(S):

Biographic/personal information is used by BLS to select participants for studies. Test results and observations are used by BLS to better understand the behavioral and psychological processes of individuals, as they reflect on the accuracy of BLS information collections.

ROUTINE USES OF RECORDS MAINTAINED IN THE SYSTEM, INCLUDING CATEGORIES OF USERS AND THE PURPOSE OF SUCH USES:

None, except for those routine uses listed in the General Prefatory Statement

to this document with the following limitations: The Routine Uses listed at paragraphs 3, 4, 7, 8, 9, and 11 in the General Prefatory Statement to this document are not applicable to this system of records. The records also may be disclosed where required by law.

DISCLOSURE TO CONSUMER REPORTING AGENCIES:

None.

POLICIES AND PRACTICES FOR STORING, RETRIEVING, ACCESSING, RETAINING, AND DISPOSING OF RECORDS IN THE SYSTEM:

STORAGE:

Paper files, and some electronic files stored on floppy disks and/or video tapes.

RETRIEVABILITY:

Respondent name and study title.

SAFEGUARDS:

Available to authorized personnel only. Files are kept in locked offices.

RETENTION AND DISPOSAL:

One to three years.

SYSTEM MANAGER(S) AND ADDRESS:

Director, CPRL, Office of Research and Evaluation, Room 4915, Postal Square Building, 2 Massachusetts Ave., NE, Washington, DC 20212.

NOTIFICATION PROCEDURE:

Mail all inquiries or present in writing to System Manager at above address.

RECORD ACCESS PROCEDURES:

As in notification procedure.

CONTESTING RECORD PROCEDURES:

As in notification procedure.

RECORD SOURCE CATEGORIES:

From individual respondents.

SYSTEMS EXEMPTED FROM CERTAIN PROVISIONS OF THE ACT:

None.

Signed at Washington, DC this 30th day of April, 1998.

Alexis M. Herman,

Secretary of Labor.

[FR Doc. 98–12129 Filed 5–6–98; 8:45 am]

BILLING CODE 4510–23–P

NATIONAL AERONAUTICS AND SPACE ADMINISTRATION

[Notice 98–062]

National Environmental Policy Act; Stardust mission

AGENCY: National Aeronautics and Space Administration (NASA).

ACTION: Finding of no significant impact.

SUMMARY: Pursuant to the National Environmental Policy Act (NEPA) of 1969, as amended (42 U.S.C. 4321, *et seq.*), the Council on Environmental Quality (CEQ) Regulations for Implementing the Procedural Provisions of NEPA (40 CFR parts 1500–1508), and NASA policy and procedures (14 CFR part 1216 subpart 1216.3), NASA has made a finding of no significant impact (FONSI) with respect to the proposed Stardust mission, which would involve a flight to the comet 81–P/Wild–2 and return of cometary and interstellar dust samples to Earth. The baseline mission calls for the Stardust spacecraft to be launched aboard a Delta II 7426 from Cape Canaveral Air Station (CCAS), Florida, in February 1999, and to return the sample return canister (SRC) to Utah Test and Training Range (UTTR) approximately 65 kilometers (40 miles) southwest of Salt Lake City, Utah in January 2006.

DATE: Comments in response to this notice must be provided in writing to NASA on or before June 8, 1998.

ADDRESSES: Comments in response to this FONSI should be addressed to Mr. Mark Dahl, NASA Headquarters, Code SD, 300 E Street SW, Washington, DC 20546. The Environmental Assessment (EA) prepared for the Stardust mission which supports this FONSI may be reviewed at:

(a) NASA Headquarters, Library, Room 1J20, 300 E Street SW, Washington, DC 20546

(b) NASA, Spaceport USA, Room 2001, John F. Kennedy Space Center, Florida, 32899 (407–867–2622). Please call Lisa Fowler beforehand at 407–867–2468 so that arrangements can be made.

(c) Jet Propulsion Laboratory, Visitors Lobby, Building 249, 4800 Oak Grove Drive, Pasadena, CA 91109 (818–354–5179)

The EA may also be examined at the following NASA locations by contacting the pertinent Freedom of Information Act Office:

(d) NASA, Ames Research Center, Moffet Field, CA 94035 (415–604–4191)

(e) NASA, Dryden Flight Research Center, Edwards, CA 93523 (805–258–2663)

(f) NASA, Goddard Space Flight Center, Greenbelt, MD 20771 (301–483–6255)

(g) NASA, Johnson Space Center, Houston, TX 77058 (281–483–8612)

(h) NASA, Langley Research Center, Hampton, VA 23665 (757–864–2497)

(i) NASA, Lewis Research Center, 21000 Brookpark Road, Cleveland, OH 44135 (216–433–2755)

(j) NASA, Marshall Space Flight Center, Huntsville, AL 35812 (256–544–5549)

(k) NASA, Stennis Space Center, MS 39529 (601–688–2164)

A limited number of copies of the EA are available for persons wishing a copy by contacting Mr. Dahl, at the address or telephone number indicated herein.

FOR FURTHER INFORMATION CONTACT: Mark Dahl, 202–358–1544.

SUPPLEMENTARY INFORMATION: NASA has reviewed the EA prepared for the Stardust mission and has determined that it represents an accurate and adequate analysis of the scope and level of associated environmental impacts. The EA is hereby incorporated by reference in this FONSI.

NASA is proposing to launch the Stardust mission, which would deliver a single spacecraft within 150 to 1000 kilometers (km) (93 to 620 miles [mi]) of the 81–P/Wild-2 comet nucleus during a flyby in 2004 to gather 1000 dust particles from the comet's coma. The proposed action calls for using a Delta II 7426 launch vehicle with a Star 37FM upper stage to inject the Stardust spacecraft into its initial heliocentric orbit in February 1999. The proposed mission design calls for the Stardust spacecraft to swing by Earth once during its seven-year tour. This gravity assist would allow the spacecraft to gain the additional energy required to intercept the comet Wild-2. During its flight, Stardust would transmit pictures of the Earth and Moon taken during the Earth swingby, transmit pictures of the comet nucleus and coma taken during comet encounter, nondestructively capture interstellar and cometary dust particles, and return these samples to Earth for study by the international scientific community. Neither the spacecraft nor the return canister would carry radioactive material.

The primary science objective for the Stardust mission is to non-destructively collect comet dust particles greater than 15 microns (μm) in size, at an encounter velocity of less than 6.5 km/second (s) (4 mi/s), and return them to Earth for scientific study.

Secondary and tertiary scientific objectives include the collection of intact particles from the Interstellar Dust Stream impinging into our solar system; provide multiple images of Wild-2, with ten times the resolution of any comet image to date, taken within 2000 km (1240 mi) of the comet nucleus; provide in-situ participle analysis capable of resolving abundant elements in comentary fields for dust participles during the coma fly-through; provide in-situ participle analysis for interstellar dust particles and planetary dust; collect comet coma molecules and return them to Earth; provide dust flux

measurement of participles having a mass less than 1 gram; and measure the dust mass flux, number of large participles, and comet mass upper limit. The Stardust mission is proposed to gather interstellar and cometary material and return it to Earth where the world scientific community can systematically analyze it with powerful research equipment in their laboratories.

Samples from Wild-2 would offer a glimpse of the best preserved fundamental building blocks out of which our Solar System formed. In addition, during its first two orbits about the Sun on its way to Wild-2, the Stardust spacecraft would collect approximately 100 interstellar dust participles. This would provide the international scientific community its first opportunity to collect and analyze these interstellar dust grains.

Alternatives that were evaluated include: (1) No-Action (i.e., no Stardust mission); (2) launch vehicles options, including the Space Shuttle, Taurus, and Atlas configurations, as well as other Delta configurations; and (3) alternative landing sites. Failure to undertake the Stardust mission would disrupt the execution of NASA's Solar System Exploration Program as defined by the Agency's Solar System Exploration Committee. The scientific value of having actual bona-fide, relatively pristine comet samples is high. While environmental impacts would be avoided by cancellation of the proposed mission, the loss of the scientific knowledge and database from carrying out the mission could be substantial. Of the launch vehicles evaluated, the Delta II 7426/Star 37 FM most closely matches the Stardust mission requirements, and minimizes adverse environmental impacts within the cost constraints of this Discovery Mission.

Expected impacts to the human environment associated with the mission arise almost entirety from the normal launch of the Delta II 7426, and to a much lesser extent, the entry, descent, landing, and recovery operations of the sample return. Air emissions from the exhaust produced by the solid propellant graphite epoxy motors (GEMs) and liquid first stage primarily include carbon monoxide, hydrochloric acid, aluminum oxide in soluble and insoluble forms, carbon dioxide, and deluge water mixed with propellant by-products. Air impacts will be short-term and not substantial. Short-term water quality and noise impacts, as well as short-term effects on wetlands, plants, and animals, would occur in the vicinity of the launch complex. These short-term impacts are of a nature to be self-correcting, and none of these effects would be substantial. There could be no impact on threatened or endangered species or critical habitat, cultural resources, or floodplains at or in the vicinity of CCAS. Accident scenarios have also been addressed and would not result in substantial environmental impacts.

The second stage would be ignited at an altitude of 118 kilometers (74 miles), which is in the ionosphere. Although the second stage would achieve orbit, its orbital decay time would fall below the limit NASA has set for orbital debris consideration. After burning its propellant to depletion, the second stage would remain in low Earth orbit (LEO) until its orbit eventually decayed. The second stage is designed to burn up as it reenters Earth's atmosphere. The Stardust Project will follow the NASA guidelines regarding orbital debris and minimizing the risk for uncontrolled reentry into the Earth's atmosphere.

The level and scope of environmental impacts associated with the launch of the Delta II 7426 vehicle are well within the envelope of impacts that have been addressed in previous FONSIs concerning other launch vehicles and spacecraft.

At capture, the comet and interstellar dust particles would be traveling at very high speed relative to the spacecraft collector and would be stopped in 1 to 3 centimeters (cm) of glass (aerogel) within microseconds. The particles would undergo extreme heating during impact and capture. This is a much more severe environment than any known sterilization techniques these particles might be subjected to on Earth. Because there is little possibility of biological contamination during sample collection, and thus an insignificant chance of returning any living organism to Earth (known as back-contamination), the Stardust project has requested and received certification from NASA's Planetary Protection Officer as a Planetary Protection Category V mission, ''Unrestricted Earth Return,'' for the inbound mission phase.

Upper altitude emissions associated with reentry of the sample return capsule (SRC) would include ablation products of the thermal protection system on the forebody. The SRC would enter the earth's atmosphere directly above UTTR's South Range with a velocity of approximately 13 km/s (8 mi/s). It would decelerate to 600 meters/s (m/s) (1962 fee/s [ft/s]) in two minutes. The material baselined to be used for the forebody heatshield is Phenolic Impregnated Ceramic Ablator (PICA), recently developed at NASA's Ames Research Center. Due to friction, the peak heating would occur at approximately 54 seconds after reentry begins, which corresponds to an altitude of approximately 60 km (196,860 ft) above the earth. The ablation would continue for about twenty seconds. Models conservatively predict that less than 22 percent of the total PICA material would ablate during reentry, and that ablation would cease at approximately 46.5 km (152,566 ft) above the earth. The total mass of the PICA material would be about 8.5 kg (18.7 pounds [lb]); of this, a maximum of 1.86 kg (4.09 lb) would be ablated during reentry. The chemical species produced during ablation would be dissipated in the shock wave behind the SRC. Two of the chemical species produced in small amounts during ablation, hydrogen cyanide and cyanide (37 grams [g] and 149 g, respectively), are considered to be acutely toxic to humans when inhaled. The ablation process and thus the production of these species would cease more than 46 km (150,000 ft) above the earth. Therefore, these concentrations would disperse in the large volume of air in the upper atmosphere and would not constitute a danger to health or life on earth. The SRC heatshield would be rapidly cooling during the subsonic portion of the descent, and would not be emitting into the lower atmosphere.

UTTR is primarily used by the U.S. Air Force as a bombing and artillery test and training range. The entry, descent, landing, and recovery operations for the 42.6 kilogram (93.7 lb) SRC would be well within the bounds of the day-to-day operations carried on at UTTR. There would be no impact on threatened or endangered species or critical habitat, cultural resources, wetlands or floodplains at UTTR. Off-nominal recovery scenarios have also been addressed. No other impacts of potential environmental concern have been identified.

On the basis of the Stardust EA, NASA has determined that the environmental impacts associated with the mission would not individually or cumulatively have a significant impact on the quality of the human environment. NASA will take no final action prior to the expiration of the 30-day comment period.

Earle K. Huckins III,

Deputy Associate Administrator for Space Science.

[FR Doc. 98–12155 Filed 5–6–98; 8:45 am]

BILLING CODE 7510–01–M

NUCLEAR REGULATORY COMMISSION

Agency Information Collection Activities: Proposed Collection; Comment Request

AGENCY: U.S. Nuclear Regulatory Commission (NRC).

ACTION: Notice of pending NRC action to submit an information collection request to OMB and solicitation of public comment.

SUMMARY: The NRC is preparing a submittal to OMB for review of continued approval of information collections under the provisions of the Paperwork Reduction Act of 1995 (44 U.S.C. Chapter 35).

Information pertaining to the requirement to be submitted:

1. *The title of the information collection:*

NRC Form 327—Special Nuclear Material (SNM) and Source Material (SM) Physical Inventory Summary Report;

NUREG/BR–0096—Instructions and Guidance for Completing Physical Inventory Summary Reports.

2. *Current OMB approval number:* 3150–0139.

3. *How often the collection is required:* The frequency of reporting corresponds to the frequency of required inventories, which depends essentially on the strategic significance of the SNM covered by the particular license. Certain licensees possessing strategic SNM are required to report inventories every 2 months. Licensees possessing SNM of moderate strategic significance must report every 6 months. Licensees possessing SNM of low strategic significance must report annually.

4. *Who is required or asked to report:* Fuel facility licensees possessing special nuclear material.

5. *The number of annual respondents:* 10.

6. *The number of hours needed annually to complete the requirement or request:* 98 (an average of approximately 4.25 hours per response for 23 responses).

7. *Abstract:* NRC Form 327 is submitted by fuel facility licensees to account for special nuclear material. The data is used by NRC to assess licensee material control and accounting programs and to confirm the absence of (or detect the occurrence of) special nuclear material theft or diversion. NUREG/BR–0096 provides specific guidance and instructions for completing the form in accordance with the requirements appropriate for a particular licensee.

Submit, by July 6, 1998, comments that address the following questions:

1. Is the proposed collection of information necessary for the NRC to properly perform its functions? Does the information have practical utility?

2. Is the burden estimate accurate?

3. Is there a way to enhance the quality, utility, and clarity of the information to be collected?

4. How can the burden of the information collection be minimized, including the use of automated collection techniques or other forms of information technology?

A copy of the draft supporting statement may be viewed free of charge at the NRC Public Document Room, 2120 L Street, NW (lower level), Washington, DC. OMB clearance requests are available at the NRC worldwide web site (http://www.nrc.gov) under the FedWorld collection link on the home page tool bar. The document will be available on the NRC home page site for 60 days after the signature date of this notice.

Comments and questions about the information collection requirements may be directed to the NRC Clearance Officer, Brenda Jo. Shelton, U.S. Nuclear Regulatory Commission, T–6 F33, Washington, DC, 20555–0001, or by telephone at 301–415–7233, or by Internet electronic mail at BJS1@NRC.GOV.

Dated at Rockville, Maryland, this 30th day of April, 1998.

For the Nuclear Regulatory Commission.

Beth C. St. Mary,

Acting NRC Clearance Officer, Office of the Chief Information Officer.

[FR Doc. 98–12172 Filed 5–6–98; 8:45 am]

BILLING CODE 7590–01–P

NUCLEAR REGULATORY COMMISSION

Agency Information Collection Activities: Submission for OMB Review; Comment Request

AGENCY: U. S. Nuclear Regulatory Commission (NRC).

ACTION: Notice of the OMB review of information collection and solicitation of public comment.

SUMMARY: The NRC has recently submitted to OMB for review the following proposal for the collection of information under the provisions of the Paperwork Reduction Act of 1995 (44 U.S.C. Chapter 35). The NRC hereby informs potential respondents that an agency may not conduct or sponsor, and that a person is not required to respond to, a collection of information unless it displays a currently valid OMB control number.

1. *Type of submission:* Revision.

2. *The title of the information collection:* ''An Approach for Using Probabilistic Risk Assessment in Risk-informed Decisions on Plant-Specific Changes to the Current Licensing Basis,'' Regulatory Guides RG–1.174 through RG–1.178.

3. *The form number if applicable:* Not applicable.

4. *How often the collection is required:* Use of the new risk-informed methodology for making changes in the licensing basis of operating plants in the areas of inservice inspection (ISI), inservice testing (IST), graded quality assurance (GQA), and technical specifications (TS), is available to all licensees but is not required. Licensees may make voluntary submittals when, and if, in their judgment, it is to their advantage to do so (for example, to improve plant safety, reduce costs, gain operating flexibility).

5. *Who will be required or asked to report:* Licensees of nuclear power plants may report when, and if, in their judgment, it is to their advantage to do so.

6. *An estimate of the number of responses:* ISI: 6, IST: 3, QA: 1, TS: 20.

7. *The estimated number of annual respondents:* ISI: 6, IST: 3, QA: 1, TS: 20.

8. *An estimate of the total number of hours needed annually to complete the requirement or request (per respondent):* ISI: 6,200, IST: 5,200, QA: 4,000, TS: 1,060.

9. *An indication of whether Section 3507(d), Pub. L. 104–13 applies:* Not applicable.

10. *Abstract:* In the specific areas of ISI, IST, GQA, and TS, a new series of Regulatory Guides provides a risk-informed method for licensees to use in requesting changes to their current licensing bases (CLB). No changes or additions have been made to any rules or regulations in conjunction with the issuance of this series of guides. The new method will be a voluntary alternative to the deterministically-based CLB change method previously used (which will remain acceptable as an alternative to the new risk-informed method).

The new risk-informed alternative method will allow licensees to concentrate on plant equipment and operations that are most critically important to plant safety so as to achieve a savings in total effort and greater operating flexibility with an insignificant change in overall safety. The guides specify the records, analyses, and documents that licensees

are expected to prepare in support of risk-informed changes to their CLB in the specified areas.

A copy of the final supporting statement may be viewed free of charge at the NRC Public Document Room, 2120 L Street, NW (lower level), Washington, DC. OMB clearance requests are available at the NRC worldwide web site (http://www.nrc.gov) under the FedWorld collection link on the home page tool bar. The document will be available on the NRC home page site for 60 days after the signature date of this notice.

Comments and questions should be directed to the OMB reviewer by June 8, 1998: Erik Godwin, Office of Information and Regulatory Affairs (3150–0011), NEOB–10202, Office of Management and Budget, Washington, DC 20503.

Comments can also be submitted by telephone at (202) 395–3084.

The NRC Clearance Officer is Brenda Jo. Shelton, 301–415–7233.

Dated at Rockville, Maryland, this 1st day of May 1998.

For the Nuclear Regulatory Commission.

Brenda Jo. Shelton,

NRC Clearance Officer, Office of the Chief Information Officer.

[FR Doc. 98–12173 Filed 5–6–98; 8:45 am]

BILLING CODE 7590–01–P

NUCLEAR REGULATORY COMMISSION

[IA 98–002]

Mr. Thomas C. Johnson; Order Prohibiting Involvement in NRC-Licensed Activities (Effective Immediately)

I

Mr. Thomas C. Johnson (Mr. Johnson) was formerly employed as a contractor employee at the Niagara Mohawk Power Corporation (NMPC), Nine Mile Point nuclear facility as a computer programmer. NMPC holds Facility License Nos. DPR–63 and NPF–69 issued by the Nuclear Regulatory Commission (NRC or Commission) pursuant to 10 CFR Part 50. These licenses authorize NMPC to operate the Nine Mile Point facilities, Units 1 and 2, in accordance with the conditions specified therein.

II

In May 1996, NMPC initiated an investigation into whether Mr. Johnson and others were involved in the alteration of a computer code used to select individuals for random drug and alcohol testing. Based on the evidence developed during the NMPC investigation, as well as a subsequent review by the NRC Office of Investigations (OI), OI concluded that Mr. Johnson and another contractor computer programmer intentionally altered the fitness-for-duty (FFD) computer program to ensure that certain individuals (including themselves) would be excluded from random FFD screening. Specifically, a patch had been inserted into the computer program to ensure certain individuals would not be selected. Moreover, the two individuals planned and executed a scheme (and a number of precautions) to elude detection and prevent tracing. These actions caused NMPC to violate 10 CFR 26.24, which requires that individuals be tested in a statistically random and unpredictable manner. As a result of this violation, Mr. Johnson, the other contractor, and others, were prevented from being selected for random FFD testing.

Although Mr. Johnson, in an interview with NMPC investigators on May 15, 1996, denied knowledge of this matter, during a subsequent interview by NMPC investigators on May 22, 1996, Mr. Johnson admitted that he was involved in a joint effort with another individual in altering the computer program for FFD testing selection. Mr. Johnson was offered an opportunity for an enforcement conference with the NRC, but declined.

III

Based on the above, the NRC has concluded that Mr. Johnson engaged in deliberate misconduct. Mr. Johnson's actions constitute a violation of 10 CFR 50.5(a)(1), which prohibits an individual from engaging in deliberate misconduct that causes or, but for detection, would have caused, a licensee to be in violation of any rule, regulation, or order, or any term, condition, or limitation of any license, issued by the Commission. In this case, Mr. Johnson caused the Licensee to be in violation of 10 CFR 26.24. Specifically,

> 10 CFR Part 26.24, requires, in part, that as a means to deter and detect substance abuse, the licensee shall implement a testing program that includes unannounced drug and alcohol testing that is to be imposed in a statistically random and unpredictable manner so that all persons in the population subject to the testing shall have an equal probability of being selected and tested.

> Contrary to the above, at some time prior to May 1996, Mr. Johnson and another contractor computer programmer altered the FFD computer program used to ensure that individuals were tested for drugs and alcohol in a statistically random and unpredictable manner, resulting in certain individuals being excluded from random FFD screening. As a result, for a indeterminate period prior to May 1996, individuals were selected for testing in a manner that was not statistically random and unpredictable.

The NRC must be able to rely on the Licensee, its contractors, and the Licensee and contractor employees to comply with NRC requirements. Mr. Johnson's action in altering the FFD program, and his collusion with another individual to hide that alteration, constitute deliberate violations of Commission regulations, and by doing so, raises serious doubt as to whether he can be relied upon to comply with NRC requirements and to provide complete and accurate information to NRC Licensees and their contractors in the future, and raises doubt about his trustworthiness and reliability.

Consequently, I lack the requisite reasonable assurance that licensed activities can be conducted in compliance with the Commission's requirements and that the health and safety of the public would be protected if Mr. Johnson were permitted at this time to be involved in NRC-licensed activities. Therefore, the public health, safety and interest require that Mr. Johnson be prohibited from any involvement in NRC-licensed activities for a period of five years from the date of this Order. Additionally, for a period of three years after the five year period of prohibition has expired, Mr. Johnson is required to notify the NRC of his acceptance of each employment offer involving NRC-licensed activities. Furthermore, pursuant to 10 CFR 2.202, I find that the significance of Mr. Johnson's conduct described above is such that the public health, safety and interest require that this Order be immediately effective.

IV

Accordingly, pursuant to sections 103, 161b, 161i, and 186 of the Atomic Energy Act of 1954, as amended, and the Commission's regulations in 10 CFR 2.202, 10 CFR 50.5, and 10 CFR 150.20, *it is hereby ordered, effective immediately, that:*

A. Thomas C. Johnson is prohibited from engaging in activities licensed by the NRC for five years from the date of this Order. NRC-licensed activities are those activities that are conducted pursuant to a specific or general license issued by the NRC, including, but not limited to, those activities of Agreement State licensees conducted pursuant to the authority granted by 10 CFR 150.20.

B. For a period of three years after the five year period of prohibition has expired, Mr. Johnson shall, within 20 days of his acceptance of each

employment offer involving NRC-licensed activities or his becoming involved in NRC-licensed activities, as defined in Paragraph IV.A above, provide notice to the Director, Office of Enforcement, U. S. Nuclear Regulatory Commission, Washington, D.C. 20555, of the name, address, and telephone number of the employer or the entity where he is, or will be, involved in the NRC-licensed activities. In the first notification, Mr. Johnson shall include a statement of his commitment to compliance with regulatory requirements and the basis why the Commission should have confidence that he will comply with applicable NRC requirements.

The Director, OE, may, in writing, relax or rescind any of the above conditions upon demonstration by Mr. Johnson of good cause.

V

In accordance with 10 CFR 2.202, Mr. Johnson must, and any other person adversely affected by this Order may, submit an answer to this Order, and may request a hearing on this Order, within 20 days of the date of this Order. Where good cause is shown, consideration will be given to extending the time to request a hearing. A request for extension of time must be made in writing to the Director, Office of Enforcement, U.S. Nuclear Regulatory Commission, Washington, D.C. 20555, and include a statement of good cause for the extension. The answer may consent to this Order. Unless the answer consents to this Order, the answer shall, in writing and under oath or affirmation, specifically admit or deny each allegation or charge made in this Order and shall set forth the matters of fact and law on which Mr. Johnson or other person adversely affected relies and the reasons as to why the Order should not have been issued. Any answer or request for a hearing shall be submitted to the Secretary, U.S. Nuclear Regulatory Commission, Attn: Chief, Rulemakings and Adjudications Staff, Washington, DC 20555. Copies also shall be sent to the Director, Office of Enforcement, U.S. Nuclear Regulatory Commission, Washington, DC 20555, to the Assistant General Counsel for Hearings and Enforcement at the same address, to the Regional Administrator, NRC Region I, U.S. Nuclear Regulatory, 475 Allendale Road, King of Prussia, Pennsylvania 19406, and to Mr. Johnson if the answer or hearing request is by a person other than Mr. Johnson. If a person other than Mr. Johnson requests a hearing, that person shall set forth with particularity the manner in which that person's interest is adversely affected by this Order and shall address the criteria set forth in 10 CFR 2.714(d).

If a hearing is requested by Mr. Johnson or a person whose interest is adversely affected, the Commission will issue an Order designating the time and place of any hearing. If a hearing is held, the issue to be considered at such hearing shall be whether this Order should be sustained.

Pursuant to 10 CFR 2.202(c)(2)(i), Mr. Johnson may, in addition to demanding a hearing, at the time the answer is filed or sooner, move the presiding officer to set aside the immediate effectiveness of the Order on the ground that the Order, including the need for immediate effectiveness, is not based on adequate evidence but on mere suspicion, unfounded allegations, or error.

In the absence of any request for hearing, or written approval of an extension of time in which to request a hearing, the provisions specified in Section IV above shall be final 20 days from the date of this Order without further order or proceedings. If an extension of time for requesting a hearing has been approved, the provisions specified in Section IV shall be final when the extension expires if a hearing request has not been received. An answer or a request for hearing shall not stay the immediate effectiveness of this order.

Dated at Rockville, Maryland this 28th day of April 1998.

For the Nuclear Regulatory Commission.

James Lieberman,

Director, Office of Enforcement.

[FR Doc. 98–12182 Filed 5–6–98; 8:45 am]

BILLING CODE 7590–01–P

NUCLEAR REGULATORY COMMISSION

[IA 98–001]

Mr. Albert M. Nardslico, Jr.; Order Prohibiting Involvement in NRC-Licensed Activities (Effective Immediately)

I

Mr. Albert M. Nardslico (Mr. Nardslico) was formerly employed as a contractor employee at the Niagara Mohawk Power Corporation (NMPC) Nine Mile Point nuclear facility as a computer programmer. NMPC holds Facility License Nos. DPR–63 and NPF–69 issued by the Nuclear Regulatory Commission (NRC or Commission) pursuant to 10 CFR Part 50. These licenses authorize NMPC to operate the Nine Mile Point facilities, Units 1 and 2, in accordance with the conditions specified therein.

II

In May 1996, NMPC initiated an investigation into whether Mr. Nardslico and others were involved in the alteration of a computer code used to select individuals for random drug and alcohol testing. Based on the evidence developed during the NMPC investigation, as well as a subsequent review by the NRC Office of Investigations (OI), OI concluded that Mr. Nardslico and another contractor computer programmer intentionally altered the fitness-for-duty (FFD) computer program to ensure that certain individuals (including themselves) would be excluded from random FFD screening. Specifically, a patch had been inserted into the computer program to ensure certain individuals would not be selected. Moreover, the two individuals planned and executed a scheme (and a number of precautions) to elude detection and prevent tracing.

These actions caused NMPC to violate 10 CFR 26.24, which requires that individuals be tested for drugs and alcohol in a statistically random and unpredictable manner. As a result of this violation, Mr. Nardslico, the other contractor employee involved in planning the scheme, and others, were prevented from being selected for random FFD testing. In addition, during the time in which his name was excluded from random selection, Mr. Nardslico had access to the site protected area, which was also at a time when Mr. Nardslico may have been using marijuana offsite. (Mr. Nardslico admitted, during the predecisional enforcement conference in the NRC Region I office on February 13, 1998, and during a June 21, 1996 interview with NMPC investigators, that he had used marijuana while employed at Nine Mile Point. While he did not recall the periods of such use, he was unable to confirm that he did not use marijuana while his name had been excluded from the FFD testing pool.)

During his interviews with NMPC, as well as during the predecisional enforcement conference with the NRC, Mr. Nardslico denied that he was involved in the alteration of the computer program. Notwithstanding Mr. Nardslico's denials, another contractor computer programmer, who had admitted his involvement in the alteration, implicated Mr. Nardslico as also being involved in the alteration. Specifically, in transcribed interviews under oath, the other contract computer programmer indicated: (1) That the corruption of the FFD computer code was a joint effort of him and Mr. Nardslico; (2) that he and Mr. Nardslico

in the July/August 1993 timeframe ''fleshed out'' a way to make changes to the fitness for duty program through the use of the ''C'' program; (3) that Mr. Nardslico had suggested adding additional persons'' names to the scheme to ''disperse'' suspicion; and (4) that he had observed Mr. Nardslico use marijuana on at least one occasion subsequent to the September 1993 code corruption. In addition, Mr. Nardslico admitted that he was aware of the computer code alteration, was also aware that his name was one of those eliminated from the FFD testing pool as part of the alteration, and was further aware that he was subject to FFD random testing because of his having access to the Nine Mile Point site. Nonetheless, Mr. Nardslico did not take appropriate action to remedy the situation or ensure that his management was made aware that the computer code had been altered, as he admitted during the predecisional enforcement conference.

Finally, some of Mr Nardslico's statements on this matter lack credibility. For example, in his first interview with NMPC on May 20, 1996, he denied any involvement in, or knowledge of, the alteration of the FFD computer code; however, in a subsequent interview with NMPC on June 21, 1996, as well as during the predecisional enforcement conference with the NRC on February 13, 1998, Mr. Nardslico admitted his knowledge of the alteration of the computer code. Also, although Mr. Nardslico indicated that he did inform a licensee Purchasing Supervisor of the alteration shortly after he stated he became aware of it, that individual denied Mr. Nardslico's assertion, and Mr. Nardslico admitted that he did not raise this issue with anyone else in the NMPC organization. In addition, although Mr. Nardslico indicated that he was not familiar with the ''C'' programming language, which was the language used for the FFD computer code, his resume listed the ''C'' language as one of the languages with which he was familiar, and others testified that Mr. Nardslico was familiar with this language. Further, Mr. Nardslico, during his interviews with NMPC, expressed a willingness to enter into business relationships with the other individual who was involved with the alteration of the computer code, while at the same time indicating that he was disturbed by the other individual's actions and lack of judgment.

III

Based on the above, the NRC has concluded that Mr. Nardslico engaged in deliberate misconduct. Mr. Nardslico's actions constitute a violation of 10 CFR 50.5(a)(1), which prohibits an individual from engaging in deliberate misconduct that causes or, but for detection, would have caused, a licensee to be in violation of any rule, regulation, or order, or any term, condition, or limitation of any license, issued by the Commission. In this case, Mr. Nardslico caused the Licensee to be in violation of 10 CFR 26.24. Specifically,

> 10 CFR Part 26.24, requires, in part, that as a means to deter and detect substance abuse, the licensee shall implement a testing program that includes unannounced drug and alcohol testing that is to be imposed in a statistically random and unpredictable manner so that all persons in the population subject to the testing shall have an equal probability of being selected and tested.
>
> Contrary to the above, at some time prior to May 1996, the actions of Mr. Nardslico and another contractor computer programmer resulted in the licensee maintaining an altered FFD computer program used to ensure that individuals were tested for drugs and alcohol in a statistically random and unpredictable manner, resulting in certain individuals (including Mr. Nardslico) being excluded from random FFD screening. As a result, for a indeterminate period prior to May 1996, individuals were selected for testing in a manner that was not statistically random and unpredictable.

The NRC must be able to rely on the Licensee, its contractors, and the Licensee and contractor employees to comply with NRC requirements. Mr. Nardslico's involvement in the altering of the FFD program, including his collusion with another contractor employee to hide that alteration, constitute a deliberate violation of Commission regulations, and by doing so, raises serious doubt as to whether he can be relied upon to comply with NRC requirements, and raises doubt about his trustworthiness and reliability.

Consequently, I lack the requisite reasonable assurance that licensed activities can be conducted in compliance with the Commission's requirements and that the health and safety of the public would be protected if Mr. Nardslico were permitted at this time to be involved in NRC-licensed activities. Therefore, the public health, safety and interest require that Mr. Nardslico be prohibited from any involvement in NRC-licensed activities for a period of five years from the date of this Order. Additionally, for a period of three years after the five year period of prohibition has expired, Mr. Nardslico is required to notify the NRC of his acceptance of each employment offer involving NRC-licensed activities. Furthermore, pursuant to 10 CFR 2.202, I find that the significance of Mr. Nardslico's conduct described above is such that the public health, safety and interest require that this Order be immediately effective.

Accordingly, pursuant to Sections 103, 161b, 161i, and 186 of the Atomic Energy Act of 1954, as amended, and the Commission's regulations in 10 CFR 2.202, 10 CFR 50.5, and 10 CFR 150.20, *it is hereby ordered, effective immediately, that:*

A. Albert M. Nardslico Jr. is prohibited from engaging in activities licensed by the NRC for five years from the date of this Order. NRC-licensed activities are those activities that are conducted pursuant to a specific or general license issued by the NRC, including, but not limited to, those activities of Agreement State licensees conducted pursuant to the authority granted by 10 CFR 150.20.

2. For a period of three years after the five year period of prohibition has expired, Mr. Nardslico shall, within 20 days of his acceptance of each employment offer involving NRC-licensed activities or his becoming involved in NRC-licensed activities, as defined in Paragraph IV.A above, provide notice to the Director, Office of Enforcement, U.S. Nuclear Regulatory Commission, Washington, D.C. 20555, of the name, address, and telephone number of the employer or the entity where he is, or will be, involved in the NRC-licensed activities. In the first notification, Mr. Nardslico shall include a statement of his commitment to compliance with regulatory requirements and the basis why the Commission should have confidence that he will comply with applicable NRC requirements.

The Director, OE, may, in writing, relax or rescind any of the above conditions upon demonstration by Mr. Nardslico of good cause.

V

In accordance with 10 CFR 2.202, Mr. Nardslico must, and any other person adversely affected by this Order may, submit an answer to this Order, and may request a hearing on this Order, within 20 days of the date of this Order. Where good cause is shown, consideration will be given to extending the time to request a hearing. A request for extension of time must be made in writing to the Director, Office of Enforcement, U.S. Nuclear Regulatory Commission Washington, D.C. 20555, and include a statement of good cause for the extension. The answer may consent to this Order. Unless the answer consents to this Order, the answer shall, in writing and under oath or

affirmation, specifically admit or deny each allegation or charge made in this Order and shall set forth the matters of fact and law on which Mr. Nardslico or other person adversely affected relies and the reasons as to why the Order should not have been issued. Any answer or request for a hearing shall be submitted to the Secretary, U.S. Nuclear Regulatory Commission, Attn: Chief, Rulemakings and Adjudications Staff, Washington, DC 20555. Copies also shall be sent to the Director, Office of Enforcement, U.S. Nuclear Regulatory Commission, Washington, DC 20555, to the Assistant General Counsel for Hearings and Enforcement at the same address, to the Regional Administrator, NRC Region I, U.S. Nuclear Regulatory, 475 Allendale Road, King of Prussia, Pennsylvania 19406, and to Mr. Nardslico if the answer or hearing request is by a person other than Mr. Nardslico. If a person other than Mr. Nardslico requests a hearing, that person shall set forth with particularity the manner in which that person's interest is adversely affected by this Order and shall address the criteria set forth in 10 CFR 2.714(d).

If a hearing is requested by Mr. Nardslico or a person whose interest is adversely affected, the Commission will issue an Order designating the time and place of any hearing. If a hearing is held, the issue to be considered at such hearing shall be whether this Order should be sustained.

Pursuant to 10 CFR 2.202(c)(2)(i), Mr. Nardslico may, in addition to demanding a hearing, at the time the answer is filed or sooner, move the presiding officer to set aside the immediate effectiveness of the Order on the ground that the Order, including the need for immediate effectiveness, is not based on adequate evidence but on mere suspicion, unfounded allegations, or error.

In the absence of any request for hearing, or written approval of an extension of time in which to request a hearing, the provisions specified in Section IV above shall be final 20 days from the date of this Order without further order or proceedings. If an extension of time for requesting a hearing has been approved, the provisions specified in Section IV shall be final when the extension expires if a hearing request has not been received. An answer or a request for hearing shall not stay the immediate effectiveness of this order.

Dated at Rockville, Maryland this 28th day of April 1998.

For the Nuclear Regulatory Commission.

James Lieberman,

Director, Office of Enforcement.

[FR Doc. 98–12181 Filed 5–6–98; 8:45 am]

BILLING CODE 7590–01–P

NUCLEAR REGULATORY COMMISSION

[Docket Nos. 50–282, 50–306]

Northern States Power Company (Prairie Island Nuclear Generating Plant, Units 1 and 2); Exemption

I

Northern States Power Company (NSP, the licensee) is the holder of Facility Operating License Nos. DPR–42 and DPR–60, which authorize operation of Prairie Island Nuclear Generating Plant, Units 1 and 2, respectively. The licenses provide, among other things, that the licensee is subject to all rules, regulations, and orders of the Commission now or hereafter in effect.

The facility consists of two pressurized-water reactors located at the licensee's site in Goodhue County, Minnesota.

II

In its letter dated March 6, 1998, the licensee requested an exemption from specific requirements of Title 10 of the Code of Federal Regulations Part 50, Section 60, and Appendix G. Specifically, NSP proposed to use American Society of Mechanical Engineers (ASME) Code Case N–514 to permit setting the pressure setpoint of each unit's overpressure protection system (OPPS) so that the pressure-temperature (P-T) limits required by 10 CFR Part 50, Appendix G, could be exceeded by 10 percent during a low temperature pressure transient.

The NRC has established requirements in 10 CFR Part 50 to protect the integrity of the reactor coolant system pressure boundary. As a part of these, 10 CFR Part 50, Appendix G, requires that P-T limits be established for reactor pressure vessels during normal operation, including anticipated operational occurrences and vessel hydrostatic testing and as stated in Appendix G, ''The appropriate requirements on * * * the pressure-temperature limits * * * must be met for all conditions.'' In order to ensure these P-T limit curves are not exceeded and provide pressure relief during low temperature overpressurization events, pressurized-water reactor licensees have installed protection systems (OPPS) as part of the reactor coolant system pressure boundary. NSP is required as part of the Prairie Island Units 1 and 2 Technical Specifications to develop, update, and submit reactor vessel P–T limits and OPPS setpoints for NRC review and approval.

By letter dated March 6, 1998, NSP submitted an exemption request to enable the use of ASME Code Case N–514 as an alternative method for determining the OPPS pressure setpoint. NSP determined that the exemption request from the provisions of 10 CFR 50.60 and Appendix G was necessary since these regulations require, as noted above, that the reactor vessel conditions not exceed the P-T limits established by Appendix G. In referring to 10 CFR 50.12 on specific exemptions, NSP cited special circumstances as stated in 10 CFR 50.12(a)(2)(ii) on achieving the underlying purpose of the regulations as its basis for requesting this exemption.

III

Pursuant to 10 CFR 50.12, the Commission may, upon application by any interested person or upon its own initiative, grant exemptions from the requirements of 10 CFR Part 50 when (1) the exemptions are authorized by law, will not present an undue risk to public health or safety, and are consistent with the common defense and security, and (2) when special circumstances are present. Special circumstances are present whenever, according to 10 CFR 50.12(a)(2)(ii), ''Application of the regulation in the particular circumstances would not serve the underlying purpose of the rule or is not necessary to achieve the underlying purpose of the rule.''

The underlying purpose of 10 CFR Part 50, Appendix G, is to establish fracture toughness requirements for the RCS pressure boundary to provide adequate margins of safety during any condition of normal operation. NSP stated that the OPPS provides a physical means of protecting the vessel by not exceeding the limits. NSP proposed that establishing the OPPS pressure setpoint per the N–514 provisions such that the vessel pressure would not exceed 110 percent of the P-T limit allowables would still provide an acceptable level of safety and mitigate the potential for an inadvertent actuation of the OPPS. The finding of an ''acceptable level of safety'' while using N–514 was made based on the conservatisms that have been explicitly incorporated into the procedure for developing the P-T limit curves. This procedure, referenced from Appendix G to Section XI of the ASME Code, includes the following conservatisms: (1) A safety factor of 2 on the pressure stresses, (2) a margin factor applied to the determination of RT_{NDT}

[reference temperature $_{\text{nil ductility temperature}}$] (using Regulatory Guide 1.99 ''Radiation Embrittlement of Reactor Vessel Materials,'' Revision 2), and (3) a limiting material toughness curve based on bounding dynamic crack initiation and crack arrest data.

In addition, NSP explained that plant operators must operate the plant between the minimum pressure required to preserve reactor coolant pump seals and a maximum pressure that does not challenge the power-operated relief valve setpoint. Without the application of ASME Code Case N–514, Prairie Island would have an operating window that is too narrow to permit reasonable system makeup and pressure control. NSP continued by stating that further reduction of the OPPS pressure setpoint below 500 psig would increase the probability that the reactor coolant pump's no. 1 seal will fail as a result of OPPS operation, and that such a seal failure could produce a breach in the reactor coolant system boundary that could not be isolated. Therefore, inadvertent OPPS actuation could lead to a small break loss-of-coolant accident and the unnecessary release of reactor coolant inside containment.

IV

For the foregoing reasons, the NRC staff has concluded that the licensee's proposed use of the alternate methodology in determining the acceptable setpoint for OPPS events will not present an undue risk to public health and safety and is consistent with the common defense and security. The NRC staff has determined that there are special circumstances present, as specified in 10 CFR 50.12(a)(2)(ii), in that the application of 10 CFR 50.60 is not necessary in order to achieve the underlying purpose of this regulation.

The NRC staff agreed with NSP's determination that an exemption would be required to approve the use of Code Case N–514. The NRC staff examined NSP's rationale to support the exemption request and concluded that the use of Code Case N–514 would also meet the underlying intent of the regulations. Based upon a consideration of the conservatisms that are explicitly defined in the Appendix G methodology (as listed in Section III above), the staff concluded that permitting the OPPS setpoint to be established such that the vessel pressure would not exceed 110 percent of the limit defined by the P-T limit curves would provide an adequate margin of safety against brittle failure of the reactor vessel. This is also consistent with the determination that the staff has reached for other licensees under similar conditions based on the same considerations. Therefore, requesting the exemption under the special circumstances of 10 CFR 50.12(a)(2)(ii) was found to be appropriate. The staff also agrees that limiting the potential for inadvertent OPPS actuation (and limiting the potential for reactor coolant pump seal damage) may improve plant safety.

Accordingly, the Commission has determined that, pursuant to 10 CFR 50.12(a), an exemption is authorized by law, will not endanger life or property or common defense and security, and is otherwise in the public interest. Therefore, the Commission hereby grants an exemption from the requirements of 10 CFR 50.60 and Appendix G to allow NSP to apply the methods in ASME Code Case N–514 for the determination of the Prairie Island Nuclear Generating Plant Units 1 and 2 pressure setpoints.

Pursuant to 10 CFR 51.32, the Commission has determined that the granting of this exemption will not have a significant effect on the quality of the human environment (63 FR 23477).

This exemption is effective upon issuance.

Dated at Rockville, Maryland, this 30th day of April 1998.

For the Nuclear Regulatory Commission.

Samuel J. Collins,

Director, Office of Nuclear Reactor Regulation.

[FR Doc. 98–12183 Filed 5–6–98; 8:45 am]

BILLING CODE 7590–01–P

NUCLEAR REGULATORY COMMISSION

[Docket No. 50–259; License No. DPR–33]

Tennessee Valley Authority; Receipt of Petition for Director's Decision Under 10 CFR 2.206

Notice is hereby given that by petition dated April 5, 1998, the Union of Concerned Scientists, (or Petitioner), has requested that the U.S. Nuclear Regulatory Commission (NRC) take action with regard to Browns Ferry Nuclear Plant, Unit No. 1. Petitioner requests (1) that the operating license for Browns Ferry Unit 1 be revoked and (2) that the NRC require the Tennessee Valley Authority (TVA) to submit either a decommissioning plan or a lay-up plan for Browns Ferry Unit 1. Petitioner further requests a hearing on this petition to present new information on Browns Ferry Unit 1 that would include a discussion of the licensing basis reconstitution that would be required to support restart, and certain financial aspects that might be a consideration for the TVA's decision for retaining the Browns Ferry Unit 1 operating license.

As the basis for this request, the Petitioner asserts that revocation of the operating license and requiring relicensing if TVA later decides to restart Unit 1 is a better, safer process than is the current Inspection Manual Chapter 0350 restart process. Further, the petition asserts that requiring a decommissioning plan would provide assurance that the irradiated fuel is stored safely and that Units 2 and 3 are sufficiently independent of Unit 1 for safe operation.

The petition is being treated pursuant to 10 CFR 2.206 of the Commission's regulations and has been referred to the Director of the Office of Nuclear Reactor Regulation. As provided by Section 2.206, appropriate action will be taken on this petition within a reasonable time.

By letter dated April 29, 1998, the Director acknowledged receipt of the petition and denied Petitioner's request for a public hearing to present new information.

A copy of the petition is available for inspection at the Commission's Public Document Room at 2120 L Street, NW., Washington, D.C. 20555.

Dated at Rockville, Maryland, this 29th day of April 1998.

For the Nuclear Regulatory Commission.

Samuel J. Collins,

Director, Office of Nuclear Reactor Regulation.

[FR Doc. 98–12178 Filed 5–6–98; 8:45 am]

BILLING CODE 7590–01–P

NUCLEAR REGULATORY COMMISSION

[Docket No. 50–390]

Tennessee Valley Authority; Notice of Consideration of Issuance of Amendment To Facility Operating License, Proposed No Significant Hazards Consideration Determination, and Opportunity for a Hearing

The U.S. Nuclear Regulatory Commission (the Commission) is considering issuance of an amendment to Facility Operating License No. NPF–90, issued to the Tennessee Valley Authority (TVA or the licensee) for operation of the Watts Bar Nuclear Plant (WBN), Unit 1 located in Rhea County, Tennessee.

WBN currently has two containment hydrogen ignitors that are inoperable due to an apparent fault in the common circuit supplying these ignitors. This condition renders Train A of the WBN

hydrogen mitigation system (HMS) inoperable in accordance with TS limiting condition for operation (LCO) 3.6.8. The condition was discovered during routine surveillance testing to the Train A ignitors on April 3, 1998, at which time WBN entered Condition A of limiting condition for operation (LCO) 3.6.8. The ignitors are located in a very high radiation and temperature area of lower containment and cannot be repaired until the reactor is taken offline. WBN's next scheduled outage for refueling is in February 1999. The proposed amendment would revise the TS LCO 3.6.8 to provide temporary requirements for hydrogen ignitors to address the two Train A ignitors which are currently out of service. The revision would apply until the next shutdown to MODE 3 following which time ignitor repairs would be performed to restore the HMS to an operable status.

Before issuance of the proposed license amendment, the Commission will have made findings required by the Atomic Energy Act of 1954, as amended (the Act) and the Commission's regulations.

The Commission has made a proposed determination that the amendment request involves no significant hazards consideration. Under the Commission's regulations in 10 CFR 50.92, this means that operation of the facility in accordance with the proposed amendment would not (1) involve a significant increase in the probability or consequences of an accident previously evaluated; or (2) create the possibility of a new or different kind of accident from any accident previously evaluated; or (3) involve a significant reduction in a margin of safety. As required by 10 CFR 50.91(a), the licensee has provided its analysis of the issue of no significant hazards consideration, which is presented below:

TVA has concluded that operation of WBN in accordance with the proposed change to the TS does not involve a significant hazards consideration. TVA's conclusion is based on its evaluation in accordance with 10 CFR 50.91(a)(1) of the three standards set forth in 10 CFR 50.92(c).

(A) The proposed amendment does not involve a significant increase in the probability or consequences of an accident previously evaluated.

The proposed temporary technical specification would permit two specific Train A ignitors (30A and 31A) in non-adjacent regions to be out of service until the next WBN entry into MODE 3. In this condition, the remaining 32 of 34 ignitors, in combination with thorough containment air mixing and with the hydrogen collection function of the air return system, will maintain the ability to burn hydrogen such that containment hydrogen remains low following a degraded core accident. Thus, the design basis of the HMS will be maintained such that a controlled hydrogen burn may occur at the lower flammability concentration following a degraded core accident. In addition, although a loss of Train B power could result in loss of ignitors in two regions of lower containment, the short duration allowed by the proposed amendment for this condition (not to exceed 72 hours) minimizes the likelihood of a concurrent accident requiring the ignitors. The WBN PSA [probabilistic safety assessment] establishes a probability of 3.6×10^{-7} events per reactor-year of a degraded core event based on 72 hours, with the probability more remote for an accident that would generate hydrogen in amounts equivalent to a metal-water reaction of 75% of core cladding for which the HMS is intended. Additionally, sufficient ignition capability in adjacent regions combined with containment air mixing would provide capability by flame propagation to the regions with no operable ignitors. Thus the failure of the two specific ignitors should not result in any change to the post-accident hydrogen burn profiles. Since the hydrogen concentration would remain low and pocketing which could lead to rapid burns and challenge containment is unlikely, the original design continues to be met. Thus the probability of a containment failure and associated radiological release is insignificantly altered. Because the containment response will not change, the proposed TS will not result in an increase in the probability or consequences of any accident previously evaluated in the WBN FSAR.

(B) Operation of the facility in accordance with the proposed amendment would not create the possibility of a new or different kind of accident from any accident previously evaluated.

As discussed above, with the two Train A ignitors out of service, the remaining 32 of 34 ignitors in combination with containment air mixing will maintain the design basis of the HMS such that a controlled hydrogen burn may be accomplished following a degraded core accident, including a short time period of 72 hours for which a loss of Train B power could result in loss of ignitors in two regions of lower containment. Since the failure of the ignitors should not result in any change to the post-accident hydrogen burn profiles and because the containment response will not change, the proposed TS will not result in any new or different kind of accident from any accident previously evaluated.

(C) Operation of the facility in accordance with the proposed amendment would not involve a significant reduction in margin of safety.

Although the HMS is not provided for a design basis accident (DBA), the Bases of the WBN TS define the design function of the HMS as having the capability to burn hydrogen in a controlled manner at the lower flammability concentration following a degraded core accident. An ignitor train is currently considered OPERABLE with at least 33 of 34 ignitors in service and each containment region having at least one operable ignitor. Although the proposed TS change would allow two specific Train A ignitors to be out of service and their associated containment regions to be without any ignitors for a short duration (72 hours), the remaining 32 of 34 ignitors will maintain the design basis of the HMS such that a controlled hydrogen burn may be accomplished following a degraded core accident. Although small increases in the hydrogen flammability concentration may occur, deflagration would still be expected to occur in a controlled manner and prior to a high hydrogen concentration. As stated earlier, failure of the two ignitors should not result in any change to the post-accident hydrogen burn profiles or containment response. Therefore, the proposed TS change will not involve a significant reduction in the margin of safety.

The NRC staff has reviewed the licensee's analysis and, based on this review, it appears that the three standards of 10 CFR 50.92(c) are satisfied. Therefore, the NRC staff proposes to determine that the amendment request involves no significant hazards consideration.

The Commission is seeking public comments on this proposed determination. Any comments received within 30 days after the date of publication of this notice will be considered in making any final determination.

Normally, the Commission will not issue the amendment until the expiration of the 30-day notice period. However, should circumstances change during the notice period such that failure to act in a timely way would result, for example, in derating or shutdown of the facility, the Commission may issue the license amendment before the expiration of the 30-day notice period, provided that its final determination is that the amendment involves no significant hazards consideration. The final determination will consider all public and State comments received. Should the Commission take this action, it will publish in the **Federal Register** a notice of issuance and provide for opportunity for a hearing after issuance. The Commission expects that the need to take this action will occur very infrequently.

Written comments may be submitted by mail to the Chief, Rules and Directives Branch, Division of Administrative Services, Office of Administration, U.S. Nuclear Regulatory Commission, Washington, DC 20555–0001, and should cite the publication date and page number of this **Federal Register** notice. Written comments may also be delivered to Room 6D59, Two White Flint North, 11545 Rockville Pike, Rockville, Maryland, from 7:30 a.m. to 4:15 p.m. Federal workdays.

Copies of written comments received may be examined at the NRC Public Document Room, the Gelman Building, 2120 L Street, NW., Washington, DC. The filing of requests for hearing and petitions for leave to intervene is discussed below.

By June 8, 1998, the licensee may file a request for a hearing with respect to issuance of the amendment to the subject facility operating license and any person whose interest may be affected by this proceeding and who wishes to participate as a party in the proceeding must file a written request for a hearing and a petition for leave to intervene. Requests for a hearing and a petition for leave to intervene shall be filed in accordance with the Commission's ''Rules of Practice for Domestic Licensing Proceedings'' in 10 CFR Part 2. Interested persons should consult a current copy of 10 CFR 2.714 which is available at the Commission's Public Document Room, the Gelman Building, 2120 L Street, NW., Washington, DC, and at the local public document room located at the Chattanooga-Hamilton County Library, 1001 Broad Street, Chattanooga, Tennessee 37402. If a request for a hearing or petition for leave to intervene is filed by the above date, the Commission or an Atomic Safety and Licensing Board, designated by the Commission or by the Chairman of the Atomic Safety and Licensing Board Panel, will rule on the request and/or petition; and the Secretary or the designated Atomic Safety and Licensing Board will issue a notice of hearing or an appropriate order.

As required by 10 CFR 2.714, a petition for leave to intervene shall set forth with particularity the interest of the petitioner in the proceeding, and how that interest may be affected by the results of the proceeding. The petition should specifically explain the reasons why intervention should be permitted with particular reference to the following factors: (1) The nature of the petitioner's right under the Act to be made party to the proceeding; (2) the nature and extent of the petitioner's property, financial, or other interest in the proceeding; and (3) the possible effect of any order which may be entered in the proceeding on the petitioner's interest. The petition should also identify the specific aspect(s) of the subject matter of the proceeding as to which petitioner wishes to intervene. Any person who has filed a petition for leave to intervene or who has been admitted as a party may amend the petition without requesting leave of the Board up to 15 days prior to the first prehearing conference scheduled in the proceeding, but such an amended petition must satisfy the specificity requirements described above.

Not later than 15 days prior to the first prehearing conference scheduled in the proceeding, a petitioner shall file a supplement to the petition to intervene which must include a list of the contentions which are sought to be litigated in the matter. Each contention must consist of a specific statement of the issue of law or fact to be raised or controverted. In addition, the petitioner shall provide a brief explanation of the bases of the contention and a concise statement of the alleged facts or expert opinion which support the contention and on which the petitioner intends to rely in proving the contention at the hearing. The petitioner must also provide references to those specific sources and documents of which the petitioner is aware and on which the petitioner intends to rely to establish those facts or expert opinion. Petitioner must provide sufficient information to show that a genuine dispute exists with the applicant on a material issue of law or fact. Contentions shall be limited to matters within the scope of the amendment under consideration. The contention must be one which, if proven, would entitle the petitioner to relief. A petitioner who fails to file such a supplement which satisfies these requirements with respect to at least one contention will not be permitted to participate as a party.

Those permitted to intervene become parties to the proceeding, subject to any limitations in the order granting leave to intervene, and have the opportunity to participate fully in the conduct of the hearing, including the opportunity to present evidence and cross-examine witnesses.

If a hearing is requested, the Commission will make a final determination on the issue of no significant hazards consideration. The final determination will serve to decide when the hearing is held.

If the final determination is that the amendment request involves no significant hazards consideration, the Commission may issue the amendment and make it immediately effective, notwithstanding the request for a hearing. Any hearing held would take place after issuance of the amendment.

If the final determination is that the amendment request involves a significant hazards consideration, any hearing held would take place before the issuance of any amendment.

A request for a hearing or a petition for leave to intervene must be filed with the Secretary of the Commission, U.S. Nuclear Regulatory Commission, Washington, DC 20555–0001, Attention: Rulemakings and Adjudications Staff, or may be delivered to the Commission's Public Document Room, the Gelman Building, 2120 L Street, NW., Washington, DC, by the above date. A copy of the petition should also be sent to the Office of the General Counsel, U.S. Nuclear Regulatory Commission, Washington, DC 20555–0001, and to General Counsel, Tennessee Valley Authority, ET 10H, 400 East Summit Hill Drive, Knoxville, Tennessee 37902, attorney for the licensee.

Nontimely filings of petitions for leave to intervene, amended petitions, supplemental petitions and/or requests for hearing will not be entertained absent a determination by the Commission, the presiding officer or the presiding Atomic Safety and Licensing Board that the petition and/or request should be granted based upon a balancing of the factors specified in 10 CFR 2.714(a)(1)(i)–(v) and 2.714(d).

For further details with respect to this action, see the application for amendment dated April 29, 1998, which is available for public inspection at the Commission's Public Document Room, the Gelman Building, 2120 L Street, NW., Washington, DC, and at the local public document room located at the Chattanooga-Hamilton County Library, 1001 Broad Street, Chattanooga, Tennessee.

Dated at Rockville, Maryland, this 1st day of May 1998.

For the Nuclear Regulatory Commission

Robert E. Martin,

Project Manager, Project Directorate II–3 , Division of Reactor Projects—I/II, Office of Nuclear Reactor Regulation.

[FR Doc. 98–12179 Filed 5–6–98; 8:45 am]

BILLING CODE 7590–01–P

SECURITIES AND EXCHANGE COMMISSION

[Investment Company Act Release No. 23167; 812–10392]

Extended Stay America, Inc.; Notice of Application

April 30, 1998.

AGENCY: Securities and Exchange Commission (''SEC'').

ACTION: Notice of application for exemption under the Investment Company Act of 1940 (the ''Act'').

SUMMARY OF APPLICATION: Applicant Extended Stay America, Inc. requests an order under section 3(b)(2) of the Act declaring that it is primarily engaged in a business other than that of investing,

reinvesting, owning, holding, or trading in securities.

FILING DATES: The application was filed on October 11, 1996, and amended on June 4, 1997, and April 14, 1998.

HEARING OR NOTIFICATION OF HEARING: An order granting the application will be issued unless the SEC orders a hearing. Interested persons may request a hearing by writing to the SEC's Secretary and serving applicant with a copy of the request, personally or by mail. Hearing requests should be received by the SEC by 5:30 p.m. on May 26, 1998, and should be accompanied by proof of service on applicant, in the form of an affidavit or, for lawyers, a certificate of service. Hearing requests should state the nature of the writer's interest, the reason for the request, and the issues contested. Persons may request notification of a hearing by writing to the SEC's Secretary.

ADDRESSES: Secretary, SEC, 450 Fifth Street, NW., Washington, DC 20549. Applicant, 450 East Las Olas Boulevard, Suite 1100, Fort Lauderdale, Florida 33301.

FOR FURTHER INFORMATION CONTACT: David W. Grim, Staff Attorney, at (202) 942–0571, or Mary Kay Frech, Branch Chief, at (202) 942–0564 (Division of Investment Management, Office of Investment Company Regulation).

SUPPLEMENTARY INFORMATION: The following is a summary of the application. The complete application may be obtained for a fee from the SEC's Public Reference Branch [450 5th Street, NW., Washington, DC 20549; (202) 942–8090].

Applicant's Representations

1. Applicant was incorporated in the state of Delaware for the purpose of developing, owning, and managing extended stay lodging facilities that are designed to appeal to value-conscious guests. Applicant's EXTENDED STAYAMERICA Efficiency Studios brand of lodging facilities is designed to offer quality accommodations to guests at substantially lower rates than most other extended stay lodging providers. Applicant's facilities feature fully furnished rooms that are rented generally on a weekly basis to guests such as business travelers, professionals on temporary work assignment, persons between domestic situations, and persons relocating or purchasing a home, with most guests staying for multiple weeks.

2. Applicant's goal is to become a national provider of economy extended stay lodging. Applicant intends to achieve this goal by rapidly developing properties in selected markets, providing high value accommodations for its guests, actively managing its properties to increase revenues and reduce operating costs, and increasing awareness of the economy extended stay concept. Applicant's Crossland Economy Studios, EXTENDED STAYAMERICA Efficiency Studios, and StudioPLUS Deluxe Studios brands of lodging facilities compete in the budget, economy, and mid-price segments, respectively, of the extended stay lodging market.

3. The development cycle for a lodging facility from identification of a suitable site through completion of construction and commencement of operations is eighteen to twenty-four months. To ensure that applicant is able to meet its financial obligations for the development of these facilities and to facilitate the planned rapid growth of applicant, applicant has raised a significant amount of money since its organization in 1995. Applicant has raised, in addition to its $60 million of initial development capital, $572 million in aggregate net proceeds from offerings of common stock in December 1995 and June 1996 and the private placement of common stock in February 1997. In addition, in March 1998, applicant consummated an offering of senior subordinated notes that raised approximately $194 million in cash, and increased and restructured its bank credit facility, pursuant to which applicant is required to borrow an additional $250 million over the next several months. Pending the use of this money to finance capital expenditures and current operations, the money has been invested in high quality short-term investments. Applicant represents that, depending upon market conditions, it may raise additional capital and/or conduct additional financings that would have the effect of substantially increasing its short-term investments.

Applicant's Legal Analysis

1. Under section 3(a)(1(C) of the Act, an issuer is an investment company if it ''is engaged or proposes to engage in the business of investing, reinvesting, owning, holding, or trading in securities, and owns or proposes to acquire investment securities having a value exceeding 40 per centum of the value of such issuer's total assets (exclusive of Government securities and cash items) on an unconsolidated basis.'' Section 3(a)(2) of the Act defines ''investment securities'' to include all securities except Government securities, securities issued by employees' securities companies, and securities issued by majority-owned subsidiaries of the owner which are not investment companies and which are not excepted from the definition of investment company by section 3(c)(1) or section 3(c)(7) of the Act.

2. Section 3(b)(1) of the Act provides that, notwithstanding section 3(a)(1)(C), any issuer primarily engaged in a business or businesses other than investing, reinvesting, owning, holding, or trading in securities is not an investment company. Applicant believes that it qualifies for the exemption under section 3(b)(1). Applicant states that the application was filed, nonetheless, because others might view differently the facts or the applicability of certain provisions of the Act to those facts.

3. Section 3(b)(2) of the Act provides that the SEC may issue an order declaring an issuer to be primarily engaged in a business or businesses other than that of investing, reinvesting, owning, holding, or trading in securities.

4. Applicant states that approximately 0.1% of its total assets as of December 31, 1997 consisted of investment securities. Applicant believes that this percentage may rise above 40% following subsequent fundraising and pending utilization of those funds in its operations.[1] Applicant seeks an order under section 3(b)(2) of the Act declaring that it is primarily engaged in a business other than that of investing, reinvesting, owning, holding, or trading in securities, and therefore is not an investment company within the meaning of the Act.

5. In determining whether a company is ''primarily engaged'' in a non-investment company business under section 3(b)(2), the SEC considers the following factors: (a) the company's historical development; (b) its public representations of policy; (c) the activities of its officers and directors; (d) the nature of its present assets; and (e) the sources of its present income.[2]

a. *Historical Development.* Applicant contends that its efforts during its brief history have been devoted solely towards the development of its extended stay lodging business. As of December 31, 1997, applicant had 185 operating facilities, 84 facilities under construction, and 146 sites under option. Applicant states that it has raised a significant amount of money since its organization in 1995 to ensure

[1] Applicant states that it will not be able to rely on rule 3a–1 under the Act in the future without changing significantly the way it does business and sharply curtailing its expansion plans so that it can meet the asset and income tests of the rule.

[2] *See Tonopah Mining Company of Nevada,* 26 S.E.C. 426, 427 (1947.

that it is able to meet its financial obligations for the development of its extended stay facilities and to facilitate its planned rapid growth. Applicant states that pending the use of that money to finance capital expenditures and current operations, the money has been invested in high quality short-term investments.

b. *Public Representations of Policy.* Applicant asserts that it has not made any public representations that would suggest that it is engaged in any business other than its extended stay lodging business. Applicant states that its prospectuses, reports to shareholders, and other filings with the SEC have exclusively focused on its lodging business. Applicant also states that all of its marketing and advertising has focused entirely on its extended stay lodging business.

c. *Activities of Officers and Directors.* Applicant represents that its directors and executive officers dedicate virtually all of their efforts toward furthering applicant's efforts in developing, owning, and managing extended stay lodging facilities. Applicant has approximately 2,900 employees. Applicant states that its short-term investments are managed by an assistant to its Chief Financial Officer. Applicant represents that the assistant devotes less than 25% of his working time to these activities, and the Chief Financial Officer spends less than 2% of his time supervising that activity. Applicant states that no other employee is involved in the management of the short-term investments.

d. *Nature of Assets.* Applicant indicates that its short-term investments, which are limited to bank deposits, U.S. Government securities, and short-term, high quality fixed income corporate/Government obligations maturing in less than 90 days from the date of investment, constituted approximately 0.1% of applicant's total assets as of December 31, 1997. Applicant also represents that if the proceeds of its March 1998 financings had been included in applicant's assets at December 31, 1997, applicant would have had short-term investments of approximately 29% of its total assets. Furthermore, applicant asserts that, depending upon market conditions, it may raise additional capital and/or conduct additional financings that would increase substantially the ratio of its short-term investments to total assets. Applicant states that its short-term investments and total assets are valued at fair value in accordance with the requirements of section 2(a)(41) of the Act.

e. *Sources of Income.* Applicant indicates that, as of December 31, 1997, it derived approximately 0.8% of its total revenues from investment income. Applicant states that it may significantly increase its short-term investments, as well as the ratio of income from these investments to total revenues, if it conducts additional capital raising transactions or financings.

6. Applicant thus believes that it meets the factors that the SEC considers in determining whether an issuer is primarily engaged in a business other than that of investing, reinvesting, owning, holding, or trading in securities.

For the SEC, by the Division of Investment Management, pursuant to delegated authority.

Jonathan G. Katz,

Secretary.

[FR Doc. 98–12148 Filed 5–6–98; 8:45 am]

BILLING CODE 8010–01–M

SECURITIES AND EXCHANGE COMMISSION

[Release No. IC–23166]

Notice of Applications for Deregistration Under Section 8(f) of the Investment Company Act of 1940

April 30, 1998.

The following is a notice of applicants for deregistration under section 8(f) of the Investment Company Act of 1940 for the month of April, 1998. A copy of each application may be obtained for a fee at the SEC's Public Reference Branch, 450 Fifth St., N.W., Washington, DC 20549 (tel. 202–942–8090). An order granting each application will be issued unless the SEC orders a hearing. Interested persons may request a hearing on any application by writing to the SEC's Secretary at the address below and serving the relevant applicant with a copy of the request, personally or by mail. Hearing requests should be received by the SEC by 5:30 p.m. on May 26, 1998, and should be accompanied by proof of service on the applicant, in the form of an affidavit or, for lawyers, a certificate of service. Hearing requests should state the nature of the writer's interest, the reason for the request, and the issues contested. Persons who wish to be notified of a hearing may request notification by writing to the Secretary, SEC, 450 Fifth Street, N.W., Washington, DC 20549.

For Further Information Contact: Diane L. Titus, at (202) 942–0564, SEC, Division of Investment Management, Office of Investment Company Regulation, Mail Stop 5–6, 450 Fifth Street, N.W., Washington, DC 20549.

InterCapital Managed Municipal Trust [File No. 811–7187], TCW/DW Term Trust 2001 [File No. 811–8222], TCW/DW Emerging Markets Government Income Trust [File No. 811–8310]

Summary: Each applicant seeks an order declaring that it has ceased to be an investment company. Each applicant has never made a public offering of its shares and does not propose to make a public offering or engage in business of any kind.

Filing Dates: Each application was filed on March 24, 1998.

Applicants' Address: Two World Trade Center, New York, New York 10048.

Putnam Capital Growth and Income Fund [File No. 811–7063]

Summary: Applicant seeks an order declaring that it has ceased to be an investment company. On February 6, 1995, applicant made a liquidating distribution to its sole shareholder of record at net asset value. All other shareholders redeemed or exchanged their shares of applicant at net asset value prior to February 6, 1995. Applicant did not incur any expenses in connection with the liquidation, and unamortized organizational expenses were paid by applicant's investment adviser.

Filing Dates: The application was filed on October 3, 1995 and amended on April 2, 1996, September 17, 1996 and March 17, 1998.

Applicant's Address: One Post Office Square, Boston, MA 02109.

Fortis Benefits Separate Account A [File No. 811–2445]

Summary: Applicant seeks an order declaring that it has ceased to be an investment company. Applicant is a separate account organized as a unit investment trust. No assets are currently retained in Applicant; all assets were redeemed at net asset value. No expenses were incurred by Applicant in connection with the redemption of its assets.

Filing Date: The application was filed on March 23, 1998.

Applicant's Address: 500 Bielenberg Drive, Woodbury, MN 55125.

Fortis Benefits Separate Account B [File No. 811–2446]

Summary: Applicant seeks an order declaring that it has ceased to be investment company. Applicant is a separate account organized as a unit investment trust. No assets are currently retained in Applicant; all assets were

redeemed at net asset value.No expenses were incurred by Applicant in connection with the redemption of its assets.

Filing Date: The application was filed on March 23, 1998.

Applicant's Address: 500 Bielenberg Drive, Woodbury, MN 55125.

Management of Managers Municipal Bond Fund [File No. 811–3755]

Summary: Applicant seeks an order declaring that it has ceased to be an investment company.On December 31, 1987, applicant transferred all of its assets and liabilities to the Municipal Bond Fund, a series of Management of Managers Group of Funds, based on the relative net asset values. The expenses of the reorganization were borne by applicant.

Filing Dates: The application was filed on November 12, 1997 and amended on April 22, 1998.

Applicant's Address: 25 Sylvan Road, Westport, CT 06880

Burridge Funds [File No. 811–7801]

Summary: Applicant seeks an order declaring that it has ceased to be an investment company. On December 30, 1997, applicant made a liquidating distribution to its shareholder at the net asset value per share. Applicant's investment adviser, The Burridge Group LLC, has agreed to pay all expenses incurred in connection with the liquidation, which are expected to be between $20,000 and $25,000.

Filing Dates: The application was filed on February 13, 1998, and amended on April 23, 1998.

Applicant's Address: 115 South LaSalle Street, Chicago, Illinois 60603.

The Garzarelli Funds [File No. 811–7877]

Summary: Applicant seeks an order declaring that it has ceased to be an investment company. By December 10, 1997, applicant distributed its assets to its securityholders at the net asset value per share. Expenses of $127,194 incurred in connection with the liquidation will be borne by applicant's investment adviser.

Filing Date: The application was filed on December 30, 1997.

Applicant's Address: 100 South Wacker Drive, Suite 2100, Chicago, Illinois 60606–4002.

AAHSA Trust [811–8680]

Summary: Applicant seeks an order declaring that it has ceased to be an investment company. Applicant consists of two separate series, the Money Market Fund and the Short-Term Bond Fund. On November 27, 1996 all shares of the Money Market Fund were redeemed at net asset value and seed money was returned to the sponsor. A public offering of shares of the Short-Term Bond fund was not made and applicant does not propose to make a public offering of shares of this Fund. No expenses were incurred in the liquidation of applicant.

Filing Date: The application was filed on December 19, 1997 and applicant has agreed to file an amendment during the notice period.

Applicant's Address: 901 E Street, N.W., Washington, D.C. 20004.

The Pilot Funds [811–3517]

Summary: Applicant seeks an order declaring that it has ceased to be an investment company. On May 16, 1997, pursuant to the applicable Reorganizing Agreements, applicant's eleven series, Pilot Equity Income Fund, Pilot Short-Term U.S. Treasury Fund, Pilot Short-Term Diversified Assets Fund, Pilot Diversified Bond Income Fund, Pilot Growth Fund, Pilot Growth And Income Fund, Pilot Intermediate Municipal Bond Fund, Pilot Intermediate U.S. Government Securities Fund, Pilot Missouri Short-Term Exempt Fund, Pilot Municipal Bond Fund, and Pilot Short-Term Tax-Exempt Diversified Fund, transferred their assets and stated liabilities into corresponding Acquiring Funds of Nations Fund, Inc. and Nations Fund Trust based on the net asset value per share. On May 23, 1997, pursuant to applicable Reorganizing Agreements, applicant's three series, Pilot International Equity Fund, Pilot Small Capitalizing Equity Fund and Pilot U.S. Government Securities Fund, transferred all of their assets and stated liabilities to corresponding Acquiring Funds of Nations Fund, Inc. and Nations Fund Trust based on the net asset value per share. Each Reorganizing Fund distributed Acquiring Fund Share to its shareholders in liquidation of the Reorganizing Fund. NationsBanc Advisors, Inc. and its affiliates bore approximately $1,348,000, and the remaining Acquiring Funds bore $141,000, in expenses in connection with the transaction.

Filing Date: The application was filed on April 2, 1998 and applicant has agreed to file an amendment during the notice period.

Applicant's Address: 3435 Stelzer Road, Columbus, Ohio 43219.

Allied Financial Corporation II [File No. 811–6345], Allied Investment Corporation II [File No. 811–6354]

Summary: Each applicant requests an order declaring that it has ceased to be an investment company. On December 31, 1997, Allied Financial Corporation II merged into Allied Capital Financial Corporation (''Financial I''), and Allied Investment Corporation II merged into Allied Investment Corporation (''Investment I'')) collectively, the ''Mergers''). The shares of common stock of each applicant issued and outstanding were converted into the right to receive cash, in the aggregate, in the amount of $0.05. At the time of the Mergers, Financial I and Investment I were each registered under the Act as a closed-end management investment company. Subsequently, on January 5, 1998, Financial I and Investment I each elected to be regulated as a business development company under the Act. At the time of the Mergers, applicants, Financial I, and Investment I were wholly-owned subsidiaries of Applied Capital Corporation (''ACC''), a business development company. Expenses incurred in connection with the Mergers totaled approximately $700 for each applicant and were borne by ACC.

Filing Dates: Each application was filed on January 14, 1998. Each applicant has agreed to file an amendment, the substance of which is incorporated in this notice, during the notice period.

Applicants' Address: 1666 K Street, N.W., 9th Floor, Washington, D.C. 20006–2803.

Allied Development Corporation [File No. 811–3553]

Summary: Applicant requests an order declaring that it has ceased to be an investment company. On December 18, 1997, applicant merged into its sole shareholder, Allied Capital Corporation (''ACC''), a business development company (the ''Merger''). On that date, each share of applicant's outstanding common stock was canceled. Expenses incurred in connection with the Merger totaled approximately $700 and were borne by ACC.

Filing Dates: The application was filed on January 14, 1998. Applicant has agreed to file an amendment, the substance of which is incorporated in this notice, during the notice period.

Applicant's Address: 1666 K Street, N.W., 9th Floor, Washington, D.C. 20006–2803.

Colonial Value Investing Portfolios—Equity Portfolio [File No. 811–5461]

Summary: Applicant requests an order declaring that it has ceased to be an investment company. On June 5, 1992, applicant's three series, Diversified Return Fund, Inflation Hedge Fund, and Growth Fund, transferred their assets and liabilities to corresponding series of Colonial Trust

III based on the relative net asset value per share. Applicant paid approximately $60,878 in expenses related to the reorganization.

Filing Dates: The application was filed on April 23, 1997 and amended on April 16, 1998.

Applicant's Address: One Financial Center, Boston, Massachusetts 02111.

The Brazilian Investment Fund, Inc. [File No. 811–6248]

Summary: Applicant seeks an order declaring that it has ceased to be an investment company. By December 31, 1997, applicant completed a liquidating distribution to its stockholders as net asset value. Expenses incurred in connection with the liquidation totaled $281,530 and were borne by applicant.

Filing Dates: The application was filed on January 7, 1998. Applicant has agreed to file an amendment during the notice period, the substance of which is incorporated in this notice.

Applicant's Address: c/o Morgan Stanley Asset Management Inc., 1221 Avenue of the Americas, New York, New York 10020.

For the Commission, by the Division of Investment Management, pursuant to delegated authority.

Jonathan G. Katz,

Secretary.

[FR Doc. 98–12147 Filed 5–6–98; 8:45 am]

BILLING CODE 8010–01–M

SECURITIES AND EXCHANGE COMMISSION

[Release No. 34–39933; File No. SR–AMEX–98–15]

Self-Regulatory Organizations; Notice of Filing and Order Granting Accelerated Approval of Proposed Rule Change by the American Stock Exchange, Inc., and Amendment No. 1 Thereto Relating to a Reduction in the Value of, and Increase in Position and Exercise Limits for, the Institutional Index

April 30, 1998.

Pursuant to Section 19(b)(1) of the Securities Exchange Act of 1934 (''Act'')[1] and Rule 19b–4 thereunder,[2] notice is hereby given that on April 7, 1998, the American Stock Exchange, Inc. (the ''Amex'' or the ''Exchange'') filed with the Securities and Exchange Commission (the ''Commission'') the proposed rule change as described in Items I and II below, which Items have been prepared by the Exchange. On April 20, 1998, the Amex filed an amendment to the proposal.[3] The Commission is publishing this notice to solicit comments on the proposed rule change from interested persons and to grant accelerated approval for the proposed rule.

I. Self Regulatory Organization's Statement of the Terms of Substance of the Proposed Rule Change

The Amex proposes to split the Institutional Index (the ''Index'' or ''XII'') to one-half its current value and correspondingly amend Exchange Rule 904C to double the position and exercise limits for XII options.

II. Self-Regulatory Organization's Statement of the Purpose of, and Statutory Basis for, the Proposed Rule Change

In its filing with the Commission, the Amex included statements concerning the purpose of and basis for the proposed rule change. No written comments were solicited or received with respect to the proposed rule change. The text of these statements may be examined at the places specified in Item IV below. The Amex has prepared summaries, set forth in sections A, B, and C below, of the most significant aspects of such statements.

A. Self-Regulatory Organization's Statement of the Purpose of, and the Statutory Basis for, the Proposed Rule Change

(1) Purpose

On August 28, 1986, the Commission granted the Exchange approval to permit the trading of options on the Institutional Index, a broad market index based on the 75 major stocks currently held in the highest dollar amounts in institutional portfolios that have a market value of more than $100 million in investment funds.[4] Initially, the aggregate value of the stocks contained in the Institutional Index was reduced by a divisor to establish an index benchmark value of 250. Since its creation, and as of the date of this filing, the level of the Institutional Index has increased nearly fivefold from 250 to 1218.

As a consequence of the Index's rising value, premium levels for the Institutional Index options have also risen. These higher premium levels have been cited as a principal factor that has discouraged retail investors and some small market professionals from trading these Index options. As a result of the foregoing, the Exchange is proposing to decrease the Institutional Index to one-half of its present value. The Exchange believes that decreasing the Index value may make the Index options more attractive to retail investors and other market professionals and therefore more competitive with other products in the marketplace.

To decrease the Index's value, the Exchange will double the divisor used in calculating the Index. The Exchange suggests that the lower valued Index will result in a substantial lowering of the dollar values of options premiums for the Institutional Index contracts. The Exchange plans to adjust outstanding series similar to the manner in which equity options are adjusted for a 2-for-1 stock split.[5] On the effective date of the split ''ex-date,'' the number of outstanding Institutional Index option contracts will be doubled and strike prices halved. No other changes are proposed as to the components of the Index, its method of calculation (other than the change in the divisor), expiration style of the options or any other Index specification.

a. Position and Exercise Limits.

Currently, position and exercise limits for the Institutional Index equal 100,000 contracts on the same side of the market of which no more than 25,000 contracts may be used to realize any differential in price between the Institutional Index and the securities underlying the Index. Although the limitation of up to 25,000 contracts for purposes of realizing any differential in price between the Institutional Index and the securities underlying the Index will remain unchanged, the Exchange proposes to double the Index's position and exercise limits to 200,000 contracts on the same side of the market. The change in position and exercise limits will be made in conjunction with the simultaneous reduction of the Index's value and the doubling of the number of contracts. Accordingly, an investor who is currently at the 100,000 contract limit will, as a result of doubling the number of contracts, automatically hold 200,000

[1] 15 U.S.C. 78s(b)(1).

[2] 17 CFR 240.19b–4.

[3] *See* letter from Scott Van Hatten, Legal Counsel, Derivative Securities, Amex, to Michael Walinskas, Senior Special Counsel, Division of Market Regulation, Commission (April 20, 1998) (''Amendment No. 1''). Amendment No. 1 specifies that on April 16, 1998, the Exchange's Board of Governors approved the submission of the instant proposed rule change to the Commission.

[4] Exchange Act Release No. 23573 (August 28, 1986), 51 FR 31859 (September 5, 1986).

[5] Consistent with customary Exchange practice, at least two weeks prior to the implementation of the proposed change to the Institutional Index value and the resulting adjustments to the outstanding Institutional Index options contracts, the Exchange will issue an information circular to its members setting forth the Index's current and new divisors, the manner in which the Index will be adjusted, the adjusted contract symbols, amounts and strike prices for outstanding XII series and the effective date of the adjustments.

contracts based on the lowered Index value. Similar to the treatment approved concerning the recent split of the Standard & Poor's 100 Stock Index,[6] thus, market participants will be able to maintain their current level of investment in XII options following the split of the Index.

The new limits will be economically equivalent to the Index's present limits in that the dollar value represented by the contracts at the new position limit will remain the same as before the split. In addition, the existing Index components will remain the same and maintain their existing respective weights in the Index. Further, existing surveillance procedures will continue to apply to the Index. Therefore, the Exchange believes that there will be no additional potential for manipulation of the Index or the underlying securities resulting from the doubling of position limits in conjunction with the halving of the Index level.

(2) Statutory Basis

The proposed rule change is consistent with Section 6(b) of the Act,[7] in general, and furthers the objectives of Section 6(b)(5),[8] in particular, in that it is designed to prevent fraudulent and manipulative acts and practices, to promote just and equitable principles of trade, to foster cooperation and coordination with persons engaged in facilitating transactions in securities, and to remove impediments to and perfect the mechanism of a free and open market and a national market system.

B. Self-Regulatory Organization's Statement on Burden on Competition

The Exchange does not believe that the proposed rule change will impose any burden on competition.

C. Self-Regulatory Organization's Statement on Comments on the Proposed Rule Change Received From Members, Participants or Others

No written comments were solicited or received with respect to the proposed rule change.

III. Commission's Findings and Order Granting Accelerated Approval of the Proposed Rule Change

The Exchange has requested that the proposed rule change be given accelerated effectiveness pursuant to Section 19(b)(2) of the Act.[9]

After careful review, the Commission finds that the proposed rule change is consistent with the requirements of the Act and the rules and regulations thereunder applicable to a national securities exchange. Specifically, the Commission believes that reducing the value of the Index will serve to promote the public interest and help remove impediments to a free and open securities market by providing a broader range of investors with a means of hedging exposure to market risk associated with securities representing highly capitalized companies. Doubling the Index divisor should result in the Index options premiums being more affordable, enabling more retail investors and other market professionals to utilize this trading vehicle, resulting in a more active and liquid trading environment.

The Commission also believes that Amex's adjustments to its position and exercise limits are appropriate and consistent with the Act. In particular the Commission believes that the position and exercise limits are reasonable in light of the fact that the size of the contract on the Index will be halved. Doubling the position and exercise limits, therefore will permit market participants to maintain, after the split of the Index, their current level of investment in XII options.

Furthermore, the Commission believes that doubling the Index's divisor will not have an adverse market impact or make trading in Index options susceptible to manipulation. After the split, the Index will continue to be comprised of the same stocks with the Same weightings and will be calculated in the same manner, except for the proposed change in the divisor. The commission notes that the Amex's surveillance procedures will also remain the same.

The Commission also notes that the Exchange will provide notice of the proposed changes to the Index and the XII contracts to its membership through an information circular.[10]

The Commission believes that the Amex information circular will provide adequate notice to market participants regarding this change to Index value and the XII contract prior to its implementation.

The Commission finds good cause for approving the proposed rule change prior to the thirtieth day after the date of publication of notice of filing thereof in the **Federal Register.** Accelerating approval of this proposal will extend the noted benefits of the proposal as quickly as possible to market participants. The Commission further believes that the proposed change of the Index's divisor does not substantially change the character of the Index options as approved by the Commission on August 28, 1986,[11] and otherwise does not raise any new or unique regulatory issues. Accordingly, the Commission believes it is consistent with Sections 19(b)(2)[12] and 6(b)(5)[13] of the Act to approve the proposed rule change on an accelerated basis.

IV. Solicitation of Comments

Interested persons are invited to submit written data, views and arguments concerning the foregoing, including whether the proposed rule change is consistent with the Act. Persons making written submissions should file six copies thereof with the Secretary, Securities and Exchange Commission, 450 Fifth Street, N.W., Washington, D.C. 20549. Copies of the submission, all subsequent amendments, all written statements with respect to the proposed rule change that are filed with the Commission, and all written communications relating to the proposed rule change between the Commission and any person, other than those that may be withheld from the public in accordance with the provisions of 5 U.S.C. 552, will be available for inspection and copying in the Commission's Public Reference Section, 450 Fifth Street, N.W., Washington, D.C. 20549. Copies of such filing will also be available for inspection and copying at the principal office of the Amex. All submissions should refer to the file number in the caption above and should be submitted by May 28, 1998.

V. Conclusion

It is therefore ordered, pursuant to Section 19(b)(2) of the Act,[14] that the proposed rule change (SR-Amex-98-15) is hereby approved on an accelerated basis.

For the Commission by the Division of Market Regulation, pursuant to delegated authority.[15]

Jonathan G. Katz,

Secretary.

[FR Doc. 98–12144 Filed 5–6–98; 8:45]

BILLING CODE 8010–01–M

[6] Exchange Act Release No. 39338 (November 19, 1997), 62 FR 63209 (November 26, 1997).

[7] U.S.C. 78f(b).

[8] U.S.C. 78f(b)(5).

[9] U.S.C. 78s(b)(2).

[10] *See supra* note 5.

[11] *See supra* note 4.

[12] 15 U.S.C. 78s(b)(2).

[13] 15 U.S.C. 78f(b)(5).

[14] 15 U.S.C. 78s(b)(2).

[15] 17 CFR 200.30–3(a)(12).

SECURITIES AND EXCHANGE COMMISSION

[Release No. 34–39941; File No. SR–Amex–98–11]

Self-Regulatory Organizations; American Stock Exchange, Inc.; Order Granting Approval of Proposed Rule Change and Amendment No. 1 Thereto and Notice of Filing and Order Granting Accelerated Approval of Amendment No. 2 to Proposed Rule Change Relating to a Reduction in the Value of the de Jager Year 2000 and Amex Airline Indices

May 1, 1998.

I. Introduction

On February 23, 1997, the American Stock Exchange, Inc. (''Amex'' or ''Exchange'') submitted to the Securities and Exchange Commission (''Commission''), pursuant to Section 19(b)(1) of the Securities Exchange Act of 1934 (''Act''),[1] and Rule 19b–4 thereunder,[2] a proposed rule change to split the de Jager Year 2000 (''de Jager Index''), Amex Securities Broker/Dealer Index (''Broker/Dealer Index'') and Amex Airline (''Airline Index'') Indices to one-half of their current values. On March 11, 1998, the Amex filed Amendment No. 1 to the proposed rule change.[3] On March 20, 1998, the Amex filed Amendment No. 2 to the proposed rule change.[4]

On March 26, 1998, the proposed rule change and Amendment No. 1 were published for comment in the **Federal Register**[5] and the Commission granted accelerated approval to the portion of the proposal relating to the Broker/Dealer Index. No comments were received on the proposal. This order approves the portions of the proposed rule change relating to the de Jager Index and Airline Index (collectively, ''de Jager and Airline Indices'') and approves Amendment No. 2 on an accelerated basis.

II. Description of the Proposal

The Commission granted the Exchange approval to list and trade options on the de Jager[6] and the Airline[7] Indices on February 19, 1997 and December 12, 1994, respectively. Initially, the aggregate value of the stocks contained in the de Jager and Airline Indices was reduced by divisors to establish index benchmark values of 250 and 200, respectively. Over the past two years, the index value of the Airline Index has more than tripled in value from 200 to 728. Moreover, since its creation, the index value of the de Jager Index has nearly doubled in value from 250[8] to 413.

As a consequence of the rising values of the Indices, premium levels for options on the de Jager and Airline Indices have also risen. According to the Exchange, these higher premium levels have been cited as the principal factor that has discourage retail investors and some small market professionals from trading these index options. As a result, the Exchange is proposing to decrease the de Jager and Airline Indices to one-half of their respective present values.

To decrease the values of the Indices, the Exchange will double the divisor used in calculating the de Jager and Airline Indices. The Amex proposes no other changes to the components of the Indices, their methods of calculation (other than the change in the divisor), expiration style of the options or any other Index specification.

The Amex believes that lower values Indices will result in substantial lowering of the dollar values of options premiums for options contracts on the de Jager and Airline Indices. The Exchange plans to adjust outstanding series similar to the manner in which equity options are adjusted for a 2-for-1 stock split. On the effective date of the split ''ex-date,'' the number of outstanding options contracts on the de Jager and Airline Indices will be doubled and the associated strike prices halved.

Position and Exercise Limits

Currently, position and exercise limits for the de Jager Index equal 12,000 contracts, while position and exercise limits for the Airline Index equal 15,000 contracts, on the same side of the market. The Exchange proposes to double the position and exercise limits to 24,000 contracts for the de Jager Index and to 30,000 contracts for the Airline Index on the same side of the market. This change will be made simultaneously with the proposed reduction of the Indices' values and the doubling of the number of contracts.

Since the new position and exercise limits will be equivalent to the Indices' present limits, the Exchange believes there is no additional potential for manipulation of the Indices or the underlying securities. Further, an investor who is currently at the de Jager (12,000) or Airline (15,000) Indices' contract limit will, as a result of the Index value reductions, automatically hold 24,000 or 30,000 contracts, respectively, to correspond with the lowered Index values. These increased position and exercise limits will revert to their original limits at the expiration of the furthest expiration month for non-LEAPs as established on the date of the split.

III. Discussion

The Commission finds that the proposed rule change, as amended, relating to the de Jager and Airline Indices is consistent with the requirements of Section 6 of the Act[9] and the rules and regulations thereunder applicable to a national securities exchange.[10] Specifically, the Commission believes that the provisions of the proposed rule change pertaining to the de Jager and Airline Indices are consistent with and further the objectives of Section 6(b)(5) of the Act[11] in that the proposed reduction in value of the de Jager and Airline Indices and the associated temporary increases in the position and exercise limits should remove impediments to and perfect the mechanism of a free and open market in

[1] 15 U.S.C. 78s(b)(1).

[2] 17 CFR 240.19b–4.

[3] *See* Letter from Scott G. Van Hatten, Legal Counsel, Derivative Securities, Amex, to Sharon Lawson, Assistant Director, Division of Market Regulation (''Division''), Commission, dated March 10, 1998 (''Amendment No. 1''). In Amendment No. 1, the Amex requests expedited review and accelerated effectiveness of the proposed rule change with respect to the provisions concerning the Broker/Dealer Index. In addition to correcting a clerical error, Amendment No. 1 also makes clear that the position and exercise limits, which are proposed to be initially doubled, will revert to their original limits at the expiration of the furthest expiration month for non-long term options series (''LEAPs'') as established on the date of the split.

[4] *See* Letter from Scott G. Van Hatten, Legal Counsel, Derivative Securities, Amex, to Sharon Lawson, Assistant Director, Division, Commission, dated March 19, 1998 (''Amendment No. 2''). In Amendment No. 2, the Amex represents that, in connection with the splitting of the Airline, Broker/Dealer and de Jager Indices, it will issue: (1) a circular to its members at least two weeks prior to the split, disclosing the pre- and post-reduction values, the doubling of the number of contracts, and the temporary doubling of the position limits for the options overlying such Indices; (2) a second notice to its members just prior to implementing the index reductions setting forth the new divisor and other relevant information; and (3) a circular at least one month prior to the expiration of the furthest non-LEAP options reminding members that the position limits are scheduled to revert to the original levels.

[5] *See* Securities Exchange Act Release No. 39775 (March 20, 1998) 63 FR 14741.

[6] *See* Securities Exchange Act Release No. 38307 62 FR 8469 (February 25, 1997) (order approving File No. SR–Amex-97–04).

[7] *See* Securities Exchange Act Relase No. 35084 59 FR 65419 (December 19, 1994) (order approving File No. SR–Amex-94–54).

[8] As originally filed, the proposal incorrectly listed the de Jager's benchmark Index value as 200. This clerical error was corrected by the Exchange in Amendment No. 1. *See* Amendment No. 1, *supra* note 3.

[9] 15 U.S.C. 78f.

[10] In approving this rule, the Commission notes that it has considered the proposed rule's impact on efficiency, competition, and capital formation. 15 U.S.C. 78c(f).

[11] 15 U.S.C. 78f(b)(5).

a manner consistent with the protection of investors and the public interest.

By reducing the value of the de Jager and Airline Indices, the Commission believes that a broader range of investors will be provided with a means to hedge their exposure to the market risk associated with the stocks underlying the Indices. Similarly, the Commission believes that reducing the value of the de Jager and Airline Indices may attract additional investors, thus creating a more active and liquid trading market.

The Commission also believes that Amex's proposed adjustments to its position and exercise limits applicable to the de Jager and Airline Indices are appropriate and consistent with the Act. In particular, the Commission believes that the temporary doubling of the position and exercise limits are reasonable in light of the fact that the size of the options contracts on the de Jager and Airline Indices will be halved and that, as a result, the number of outstanding options contracts an investor holds will be doubled. The temporary doubling of the position and exercise limits, therefore, will ensure that investors will not potentially be in violation of the lower existing position and exercise limits while permitting market participants to maintain, after the split of the de Jager and Airline Indices, their current level of investment in the de Jager and Airline Index options contracts. As noted above, the increased position and exercise limits of 24,000 and 30,000 contracts will revert to their original limits of 12,000 and 15,000 contracts, respectively, at the expiration of the furthest expiration month for non-LEAPs as established on the date of the split.[12]

The Commission further believes that doubling the de Jager and Airline Indices' divisors will not have an adverse market impact on the trading in these options. After the split, the de Jager and Airline Indices will continue to be composed of the same stocks with the same weightings and will be calculated in the same manner, except for the proposed change in the divisors. The Commission notes that the Amex's surveillance procedures also will remain the same.

Finally, the Commission notes that, prior to implementing the proposed changes, the Exchange will provide advance notice of the proposed changes to the de Jager and Airline Indices to its membership.[13] The de Jager and Airline Indices are expected to be reduced by one-half immediately following the May 15, 1998 expiration.[14] The Amex has committed to provide notice to its membership at least two weeks prior to the implementation of the proposed changes to the values of the de Jager and Airline Indices and the resulting adjustments to the outstanding options contracts on the de Jager and Airline Indices.[15] In addition, the Commission notes that the Exchange has agreed to issue a second notice to its members just prior to implementing the Index reductions setting forth the new divisor and other relevant information.[16] Finally, the Exchange has agreed to issue a circular to its members at least one month prior to the expiration of the furthest non-LEAP options on the de Jager and Airline Indices reminding its member firms that the respective position and exercise limits will revert to their original levels.[17] The Commission believes that the proposed time frames should allow for adequate notice to be provided to the holders of all open positions in options on the de Jager and Airline Indices and other market participants.

The Commission finds good cause for approving Amendment No. 2 to the proposed rule change prior to the thirtieth day after publication in the **Federal Register**. The Commission notes that Amendment No. 2 merely codifies the notification procedures that the Amex had agreed to verbally prior to the Commission's grant of partial accelerated approval to the reduction in value of the Broker/Dealer Index. The Commission believes that Amendment No. 2 should ensure that market participants will receive adequate notice prior to the implementation of the adjustments to the values of the de Jager and Airline Indices and the eventual reversion to the original position and exercise limits. Accordingly, the Commission finds that good cause exists, consistent with Section 6(b)(5) of the Act,[18] to accelerate approval of Amendment No. 2 to the proposed rule change.

IV. Solicitation of Comments

Interested persons are invited to submit written data, views and arguments concerning Amendment No. 2, including whether Amendment No. 2 is consistent with the Act. Persons making written submissions should file six copies thereof with the Secretary, Securities and Exchange Commission, 450 Fifth Street, N.W., Washington, D.C. 20549. Copies of the submissions, all subsequent amendments, all written statements with respect to the proposed rule change that are filed with the Commission and all written communications relating to the proposed rule change between the Commission and any person, other than those that may be withheld from the public in accordance with the provisions of 5 U.S.C. 552, will be available for inspection and copying at the Commission's Public Reference Room, 450 Fifth Street, N.W., Washington, D.C. 20549. Copies of such filing will also be available for inspection and copying at the principal office of the Amex. All submissions should refer to File Number SR–Amex–98–11 and should be submitted by May 28, 1998.

V. Conclusion

For the foregoing reasons, the Commission finds that the Amex's proposal, as amended, to reduce the value of the de Jager and Airline Indices by one-half and to temporarily double the corresponding position and exercise limits, is consistent with the requirements of the Act and the rules and regulations thereunder.

It is therefore ordered, pursuant to Section 19(b)(2) of the Act,[19] that the portions of the amended proposed rule change (SR–Amex–98–11) relating to the de Jager and Airline Indices are approved.

For the Commission, by the Division of Market Regulation, pursuant to delegated authority.[20]

Jonathan G. Katz,

Secretary.

[FR Doc. 98–12145 Filed 5–6–98; 8:45 am]

BILLING CODE 8010–01–M

[12] According to the Amex, January 1999 and February 1999 will be the furthest expiration months for non-LEAPs on the Airline and de Jager Indices, respectively, for purposes of the reversion of position and exercise limits to their original levels. Per telephone conversation between Scott Hatten, Legal Counsel, Derivative Securities, Amex, and Deborah Flynn, Division, Commission, on April 29, 1998.

[13] *See* Amendment No. 2, *supra* note 5.

[14] Per telephone conversation between Scott Van Hatten, Legal Counsel, Derivative Securities, Amex, and Deborah Flynn, Division, Commission, on May 1, 1998.

[15] *See* Amendment No. 2, *supra* note 5.

[16] *Id.*

[17] *Id.*

[18] 15 U.S.C. 78f(b)(5).

[19] 15 U.S.C. 78s(b)(2).

[20] 17 CFR 200.30–3(a)(12).

SECURITIES AND EXCHANGE COMMISSION

[Release No. 34–39936; File No. SR–NASD–98–26]

Self-Regulatory Organization; Notice of Filing and Order Granting Accelerated Partial Approval to Amendment No. 3 to Proposed Rule Changes by the National Association of Securities Dealers, Inc. to Institute, on a Pilot Basis, New Primary Nasdaq Market Maker Standards for Nasdaq National Market Securities

April 30, 1998.

I. Introduction

On March 19, 1998, the National Association of Securities Dealers, Inc. (''NASD'' or ''Association''), through its wholly-owned subsidiary The Nasdaq Stock Market, Inc. (''Nasdaq''), submitted to the Securities and Exchange Commission (''SEC'' or ''Commission''), pursuant to Section 19(b)(1) of the Securities Exchange Act of 1934 (''Exchange Act'') [1] and Rule 196–4 thereunder,[2] proposed rule changes to: (a) Implement, on a pilot basis, new Primary Nasdaq Market Maker (''PMM'') standards for all Nasdaq National Market (''NNM'') securities; (b) extend the NASD's Short Sale Rule pilot until November 1, 1998; and (c) extend the suspension of existing PMM standards until May 1, 1998. On March 30, 1998, the Commission issued notice of the filing and approved, on an accelerated basis, the portions of the filing extending the NASD's Short Sale Rule pilot and the suspension of existing PMM standards.[3]

On April 29, 1998, Nasdaq filed Amendment No. 3 to the proposal,[4] proposing to: (a) Extend the comment period by 30 days to May 27, 1998; (b) continue to suspend the current PMM standards until July 1, 1998; (c) extend the NASD's Short Sale Rule pilot until January 4, 1999; (d) change the dates during which the PMM pilot will run to July 1, 1998, through January 4, 1999. Nasdaq also is proposing to amend subparagraph (g) of NASD Rule 4612 to change the method for determining how market makers that are not managers or co-managers in an underwriting syndicate of a secondary offering may qualify as PMMs. Nasdaq has requested accelerated approval of the suspension of the current PMM standards.

Background

Present, NASD Rule 4612 provides that a member registered as a Nasdaq market maker pursuant to NASD Rule 4611 may be deemed a PMM if that member meets certain threshold standards. The implementation of new Order Execution Rules [5] and the concurrent move towards a more order-driven, rather than a quote-driven, market raised questions about the continued relevance of those PMM standards. As a result, such standards were suspended beginning in early 1997.[6] Currently, all market makers are designated as PMMS.

Since February 1997, Nasdaq has worked to develop PMM standards that are more meaningful in an increasingly order-driven environment and that better identify firms engaged in responsible market making activities deserving of the benefits associated with begin a PMM, such as being exempt from NASD Rule 3350, the NASD's short sale rule. The NASD now proposes to suspend the existing PMM standards and to implement new standards on a pilot basis from July 1, 1998, until January 4, 1999. The NASD intends the new standards to better evaluate whether a market maker providers meaningful liquidity to the market. To determine whether a particular market maker is such a provider liquidity, Nasdaq will analyze that market maker's trading activity using a new test.

For the reasons discussed below, the Commission has determined to grant accelerated approval of Nasdaq's request to continue to suspend the current PMM standards until July 1, 1998, as requested in Amendment No. 3. Further, given the proposal's complexity and the Commission's desire to give the public sufficient time to consider the proposal, the Commission has extended the comment period for the proposed rule changes, as amended, to May 27, 1998.

II. Proposed Rule Changes

As discussed in detail in Exchange Act Release No. 39819, Nasdaq is proposing a new set of PMM standards. In the current filing, Nasdaq is proposing an adjustment to the PMM standards with respect to markets that are not managers or co-managers in an underwriting syndicate of a secondary offering. In particular, Nasdaq proposes to amend subparagraph (g)(2) of NASD Rule 4612 to change the method for determining how market makers that are not managers or co-managers in an underwriting syndicate of a secondary offering may qualify as PMMs. Under the previous rule, a market maker could become a PMM after the secondary offering had been announced or a registration statement had been filed with the Commission if the market maker was registered in the security and satisfied the PMM standards for 40 days or until the registration became effective, whichever occurred first. Thus, for secondary offerings the rule contained a variable ''review period,'' during which a market maker was required to meet PMM standards. Due to technological constraints and the fact that PMM calculations under the proposed rule are more complex than they were under the previous rule, Nasdaq, in developing the PMM pilot, has been unable to build a system that is able to make the PMM calculation using a variable review period. Additionally, it has become clear that the existing rule for secondary public offerings may be rendered less meaningful because PMM status under the proposed new standards is determined by comparing and examining market makers' share volume and number of trades during definite time periods. Thus, introducing a variable time period could have consequences that were not foreseen when the new standards were crafted.

Nasdaq recognizes, however, that market makers should be held to a more stringent standard before they may trade secondary offerings as PMMs. Accordingly, Nasdaq proposes to amend NASD Rule 4612 so that a market maker that wishes to register and become a PMM in a secondary offering will have to fulfill the following two conditions. First, the market maker must register and become a market maker in a security for 40 days or until the registration becomes effective, whichever occurs first. Second, at the time the registration becomes effective or 40 days passes, the market maker

[1] 15 U.S.C. 78s(b)(1).

[2] 17 CFR 240.19b–4.

[3] Exchange Act Release No. 39819 (March 30, 1998) 63 FR 16841 (April 6, 1998).

[4] *See* letter from Robert E. Aber, Senior Vice President and General Counsel, Nasdaq, to Richard Strasser, Assistant Director, Division of Market Regulation, SEC, dated April 29, 1998. Exchange Act Release No. 39819 discussed Amendment No. 1 and Amendment No. 2 to the filing, which were filed with the Commission on March 25 and 26, 1998, respectively.

[5] On August 29, 1996, the Commission promulgated a new rule, the Limit Order Display Rule (Exchange Act Rule 11Ac1–4) and adopted amendments to the Quote Rule (Exchange Act Rule 11Ac1–1), which together are designated to enhance the quality of published quotations for securities and promote competition and pricing efficiency in U.S. securities markets (collectively, the ''Order Execution Rules''). *See* Securities Exchange Act Release No. 37619A (September 6, 1996) 61 FR 48290 (September 12, 1996) (''Order Execution Rules Adopting Release'').

[6] *See* Exchange Act Release No. 38294 (February 14, 1997) 62 FR 8289 (February 24, 1997) (approving temporary suspension of PMM standards); Exchange Act Release No. 39198 (October 3, 1997) 62 FR 53365 (October 14, 1997) (extending suspension through April 1, 1998); Exchange Act Release No. 39819 (March 30, 1998) 63 FR 16841 (April 6, 1998) (extending suspension through May 1, 1998).

must be a PMM in 80% or more of the Nasdaq National Market securities in which it is registered (''80% Firm''). This proposal provides a meaningful measure as to whether a market maker should be a PMM after a secondary offering has been announced because it will require market makers to register and be in a stock for a meaningful time period (which may be as long as 40 days) and to be an 80% Firm before it may qualify as a PMM. Furthermore, Nasdaq notes that this approach is in line with the provisions of NASD rule 4612 regarding initial registration situations and initial public offerings (''IPO'').

Nasdaq also proposes to amend subparagraph (g)(2)(B) of NASD rule 4612, to clarify the timing for the imposition of a 10 day prohibition from participating in an IPO (''Over 10 Day Penalty''). This amendment would codify an interpretation of subparagraph (g)(2)(B) of NASD Rule 4612, that was announced in a *For Your Information* included in the June 1996 edition of the NASD's *Notice to Members.* Specifically, the amendment would clarify that if a PMM in an IPO withdraws on an unexcused basis in the first review period, the 10 Day Penalty will commence on the next business day after the unexcused withdrawal. Additionally, if a PMM in an IPO fails to meet the applicable PMM thresholds during the first review period, the 10 Day Penalty will begin on the day the market loses its PMM designation (the third business day of a month).

* * * * *

The proposed rule language follows. Additions are italicized; deletions are bracketed.

Rule 4612

(a)–(f) No Change

(g) In registration situations:

(1) No Change

(2) Notwithstanding paragraph (g)(1) above, after an offering in a stock has been publicly announced or a registration statement has been filed *with the Securities and Exchange Commission,* no market maker may register in the stock as a Primary Nasdaq Market Maker unless it meets the requirements set forth below:

(A) For secondary offerings[:

(i)], the secondary offering has become effective [and the market maker has satisfied the qualification criteria in the time period between registering in the security and the offering becoming effective] *or 40 days have elapsed since the market maker registered in the security (whichever occurs first), and at such time, the market maker is a Primary Nasdaq Market Maker in 80% or more of the Nasdaq National Market Maker securities in which it is registered;* provided, however, that if the member is a manager or co-manager of the underwriting syndicate for the secondary offering and it is a [PMM] *Primary Nasdaq Market Maker* in 80% or more of the Nasdaq National Market securities in which it is registered, the member is eligible to become a [PMM] *Primary Nasdaq Market Maker* in the issue prior to the effective date of the secondary offering regardless of whether the member was a registered market maker in the stock before the announcement of the secondary offering[; or

(ii) the market maker has satisfied the qualification criteria for 40 calendar days].

(BN) For initial public offerings (IPOs):

(i) the market maker may register in the offering and immediately become a Primary Nasdaq Market Maker if it is a Primary Nasdaq Market Maker in 80% of the securities in which it has registered; provided however, that if[, at the end of the first review period,] the Primary Nasdaq Market Maker has withdrawn on an unexcused basis from the security *at any time during the first review period* or has not satisfied the [qualification criteria] *applicable thresholds at the end of the first review period,* it shall not be afforded a Primary Nasdaq Market Maker designation on any subsequent initial public offerings for the next 10 business days *following the unexcused withdrawal or the next 10 business days following the day on which the Primary Nasdaq Market Maker is notified that it failed to satisfy the applicable thresholds for the first review period (as applicable);* or

(ii) No Change.

(C) No Change.

(3) No Change

(h) [The Board of Governors may modify the threshold standards set forth in paragraphs (a) and (b) above if it finds that maintenance of such standards would result in an adverse impact on a class of investors or on Nasdaq.] *This rule shall be in effect beginning July 1, 1998, and remain in effect until January 4, 1999.*

* * * * *

NASD Rule 3350

(a)–(k) No Changes

(1) This Rule shall be in effect until [November 1, 1998] *January 4, 1999.*

* * * * *

III. Discussion

After careful consideration, the Commission has concluded, for the reasons set forth below, that the extension of the current suspensions of existing PMM standards through July 1, 1998, is consistent with the requirements of the Exchange Act and the rules and regulations thereunder. As the Commission discussed in its previous order relating to the PMM pilot,[7] extending the suspension of the current PMM standards to accommodate implementing the new pilot is consistent with Section 15A(b)(6)[8] of the Exchange Act. Section 15A(b)(6) of the Exchange Act requires that the NASD's rules be designed, among other things, to prevent fraudulent and manipulative acts and practices and to promote just and equitable principles of trade. The Commission believes that continued suspension of the current PMM standards will facilitate Nasdaq's efforts in implementing more meaningful PMM standards which should help to enhance market liquidity by rewarding those market makers that meet the new standards. As a result, continuing the suspension of the current PMM standards is consistent with Section 15A(b)(6) of the Exchange Act.

In finding that the suspension of the existing PMM standards is consistent with the Exchange Act, the Commission reserves judgment on the merits of the Short Sale Rule, any market maker exemptions to that rule and the proposed new PMM standards. The Commission recognizes that the current Short Sale Rule already has generated significant public comment. Such commentary, along with any further comment on the interaction of the Short Sale Rule with the proposed new PPM standards, will help guide the Commission's evaluation of the Short Sale Rule and new PMM standards. During the PMM pilot period, the Commission anticipates that the NASD will continue to address the Commission's questions and concerns and provide the Commission staff with any relevant information about the practical effects and the operation of the revised PMM standards and possible interaction between those standards and the NASD's Short Sale Rule.

As proposed, the new PMM standards will become effectively July 1, 1998, when the suspension of the existing PMM standards, under Amendment No. 3, expires. Nasdaq notes that currently all market makers registered in a security are PMMs due to the suspension of the previous PMM standards, and will continue to be so

[7] *See* Exchange Act Release No. 39819 (March 30, 1998) 63 FR 16841 (April 6, 1998) (extending suspension through May 1, 1998).

[8] 15 U.S.C. 78o–3(b)(6).

designed on the pilot's proposed start date of July 1, 1998. Under the one-month look-back provision in the PMM pilot program, Nasdaq will consider the previous calendar month and the current month to determine a market maker's continued PMM eligibility if the market maker attained PMM status in a security during the previous month, but fails to meet the applicable thresholds for the current month. Nasdaq recognizes that once the pilot begins on July 1, 1998, PMMs will not have the ability to avail themselves of the one-month look-back provision because there will be no meaningful trading to analyze prior to July 1, 1998. Thus, to give PMMs the full benefit of the one-month look-back period and to allow market makers time to adjust their trading activity to the new standards, Nasdaq proposes to implement the new standards so that no market maker that is designated as a PMM when the pilot begins on July 1, 1998, will lose its PMM status—based on a failure to meet the new PMM standards—until September 3, 1998. Nasdaq believes, and the Commission agrees, that it is fair to give market makers this time to make necessary adjustments to their trading activity to help them maintain their PMM designation, particularly since PMM standards have been suspended for more than a year and the new PMM standards are more stringent than the previous standards. The PMM pilot, pursuant to Amendment No. 3, would run until January 4, 1999.

The Commission finds good cause for approving the extension of the suspension of existing PMM standards prior to the 30th day after the date of publication of notice of filing thereof. It could be disruptive to market making to reintroduce outdated PMM standards for a brief period prior to implementing a new PMM pilot. Further, the current PMM standards have been suspended until May 1, 1998, at which time the old PMM standards—which are not a meaningful measure of a market maker's liquidity-providing activity—would be used again to determine market makers' PMM status. To ensure continuity in the PMM standards and the regulation of short selling activity, to maintain orderly markets, and to avoid confusion, it is necessary to continue the suspension of the prior PMM standards until the new standards are implemented on July 1, 1998.

IV. Solicitation of Comments

Given the proposal's complexity and the Commission's desire to give the public sufficient time to consider the proposal, the Commission hereby grants Nasdaq's request to extend the comment period for the proposed rule changes, as amended, to May 27, 1998. Interested persons are invited to submit written data, views, and arguments concerning the foregoing, including whether the proposed rule changes are consistent with the Exchange Act. Persons making written submissions should file six copies thereof with the Secretary, Securities and Exchange Commission, 450 Fifth Street, N.W., Washington, DC 20549. Copies of the submissions, all subsequent amendments, all written statements with respect to the proposed rule change that are filed with the Commission, and all written communications relating to the proposed rule change between the Commission and any person, other than those that may be withheld from the public in accordance with the provisions of 5 U.S.C. 552, will be available for inspection and copying in the Commission's Public Reference Room. Copies of such filing will also be available for inspection and copying at the principal office of the NASD. All submissions should refer to File No. SR–NASD–98–26 and should be submitted by May 27, 1998.

V. Conclusion

It is therefore ordered, pursuant to Section 19(b)(2) of the Exchange Act,[9] that Amendment No. 3 to the proposed rule change, SR–NASD–98–26, which extends, on an accelerated basis, the suspension of the current PMM standards to July 1, 1998, be and hereby is approved.[10]

For the Commission, by the Division of Market Regulation, pursuant to delegated authority.[11]

Jonathan G. Katz,

Secretary.

[FR Doc. 98–12142 Filed 5–6–98; 8:45 am]

BILLING CODE 8010–01–M

[9] 15 U.S.C. 78s(b)(2).

[10] In approving the proposal, the Commission has considered the proposal's impact on efficiency, competition, and capital formation. The proposal likely will provide the Commission with data necessary to enable it to evaluate the impact of the proposed PMM standards on the Nasdaq market and market participants. 15 U.S.C. 78c(f).

[11] 17 CFR 200.30–3(a)(12).

SECURITIES AND EXCHANGE COMMISSION

[Release No. 34–39934; File No. SR–PCX–98–20]

Self-Regulatory Organizations; Notice of Filing and Immediate Effectiveness of Proposed Rule Change by the Pacific Exchange, Inc. To Discontinue the Exchange's SCOR Marketplace

April 30, 1998.

Pursuant to Section 19(b)(1) of the Securities Exchange Act of 1934 (''Exchange Act'')[1] and Rule 19b–4 thereunder,[2] notice is hereby given that on April 16, 1998, the Pacific Exchange, Inc. (''PCX'' or ''Exchange'') filed with the Securities and Exchange Commission (''Commission'' or ''SEC'') the proposed rule change as described in Items I, II and III below, which Items have been prepared by the Exchange.[3] The Exchange has designated this proposal as one that does not significantly affect the protection of investors or the public interest, does not impose any significant burden on competition, and by its terms does not become operative for 30 days after the date of the filing. In addition, the Exchange gave the Commission written notice of its intent to file the proposed rule change, along with a brief description and text of the proposed rule change, at least five business days prior to the date of filing of the proposed rule change. As a result, the proposal is effective upon filing under Exchange Act Section 19(b)(3)(A)(iii) and Rule 19b–4(e)(6) thereunder. The Commission is publishing this notice to solicit comments on the proposed rule change from interested persons.

I. Self-Regulatory Organization's Statement of the Terms of Substance of the Proposed Rule Change

The Exchange is proposing to discontinue its Small Corporate Offering Registration (''SCOR'') Marketplace and to remove its rules on the SCOR Marketplace from the Rules of the Exchange. The text of the proposed rule change is attached as Exhibit A.

[1] 15 U.S.C. 78s(b)(1).

[2] 17 CFR 240.19b–4.

[3] The Exchange also submitted a technical amendment to the proposed rule change to correct typographical errors in the original filing. *See* Letter from Michael D. Pierson, Senior Attorney, Regulatory Policy, Exchange, to Jeffrey Schwartz, Special Counsel, Division of Market Regulation, Commission, dated April 28, 1998.

II. Self-Regulatory Organizations Statement of the Purpose of, and Statutory Basis for, the Proposed Rule Change

In its filing with the Commission, the Exchange included statements concerning the purpose of and basis for the proposed rule change and discussed any comments it received on the proposed rule change. The text of these statements may be examined at the places specified in Item IV below. The Exchange has prepared summaries, set forth in sections A, B and C below, of the most significant aspects of such statements.

A. Self-Regulatory Organization's Statement of the Purpose of, and Statutory Basis for, the Proposed Rule Change

Purpose

On April 19, 1995, the Commission approved an Exchange proposal to permit the Exchange to list and trade SCOR securities, *i.e.*, single classes of common or preferred stock that were issued pursuant to either Regulation A (''Reg. A'') or Rule 504 under the Securities Act of 1933 (''Securities Act'').[4] The proposal was approved as a three-year pilot program, which expired on April 19, 1998. At the time this proposed rule change was filed with the Commission, there were no SCOR securities listed or traded on the Exchange and there were no applications pending for participation in the SCOR program.

The SCOR Marketplace was created as a secondary market for small companies sponsoring direct public offerings (DPOs), selling stock directly to investors under federal Reg. A standards, or state laws for SCOR issues. These federal and state programs are intended to help small businesses raise public capital, without following the rigorous filing and reporting requirements normally applied to securities offerings sponsored by larger companies, and without the support of a securities underwriter. Reg. A offerings are limited to $5 million; SCOR offerings to $1 million.

The Exchange was approached in 1992 by small business advocates who believed that the two programs were not being fully used, in part due to the absence of a well regulated, liquid secondary market for the trading of SCOR and Reg. A stocks. At that time, secondary market activity in these offerings was limited to the Nasdaq Bulletin Board, or to a single stock broker (usually operating in the sponsoring company's hometown) willing to keep a physical record of potential buyers and sellers. The PCX spend nearly three years working with state and federal securities regulators to develop the SCOR Marketplace, which was approved by the Commission in 1995.[5]

From 1996 through the middle of 1997, 178 companies completed SCOR or Reg. A offerings, according to statistics complied by PCX staff. Many of these firms contacted the PCX about listing on the SCOR Marketplace. None, however, completed the listing application process at the Exchange, and only a handful were listed by other markets: two on the Nasdaq Small Cap market, one on the Toronto Stock Exchange, five on the OTC bulletin board, and one on the Pink Sheets. Although one company applied to list its SCOR securities on the PCX, it later withdrew its application.

Accordingly, the Exchange has determined, after careful consideration, to discontinue its SCOR Marketplace.

Basis

The Exchange believes that the proposal is consistent with Section 6(b) of the Exchange Act, in general, and Section 6(b)(5), in particular, in that it is designed to facilitate transactions in securities, promote just and equitable principles of trade, and to protect investors and The public interest. The Exchange does not believe that the proposal will affect the protection of investors or the public interest because no securities are currently listed or traded under the SCOR Marketplace. In addition, the Exchange does not believe that discontinuing the program will impose any burden on competition because the rule change will not establish any new rules or requirements.

B. Self-Regulatory Organization's Statement on Burden on Competition

The Exchange does not believe that the proposed rule change will impose any burden on competition.

C. Self-Regulatory Organization's Statement on Comments on the Proposed Rule Change Received From Members, Participants, or Others

Written comments on the proposed rule change were neither solicited nor received.

III. Date of Effectiveness of the Proposed Rule Change and Timing for Commission Action

The foregoing rule change shall become operative 30 days after the date of filing, pursuant to subparagraph (e)(6)(iii) of Exchange Act Rule 19b–4. At any time within 60 days of the date of filing of such proposed rule change, the Commission may summarily abrogate the rule change if it appears to the Commission that such action is necessary or appropriate in the public interest, for the protection of investors, or otherwise in furtherance of the purposes of the Exchange Act.[6]

IV. Solicitation of Comments

Interested persons are invited to submit written data, views, and arguments concerning the foregoing, including whether the proposed rule change is consistent with the Exchange Act. Persons making written submissions should file six copies thereof with the Secretary, Securities and Exchange Commission, 450 Fifth Street, N.W., Washington DC 20549. Copies of the submission, all subsequent amendments, all written statements with respect to the proposed rule change that are filed with the Commission, and all written communications relating to the proposed rule change between the Commission and any person, other than those that may be withheld from the public in accordance with the provisions of 5 U.S.C. 552, will be available for inspection and copying in the Commission's Public Reference Room. Copies of such filing will also be available for inspection and copying at the principal office of the Exchange. All submissions should refer to File No. SR–PCX–98–20 and should be submitted by May 28, 1998.

For the Commission, by the Division of Market Regulation, pursuant to delegated authority.[7]

[4] *See* Exchange Act Release No. 35628 (April 19, 1995) 60 FR 20787 (April 27, 1995) (order approving SR–PSE–94–31); *see also* Exchange Act Release No. 35636 (April 21, 1995) 60 FR 20781 (April 27, 1995) (order approving new listing fees for SCOR Securities, SR–PSE–95–03).

[5] *See* note 3 above.

[6] In reviewing this proposal, the Commission has considered its impact on efficiency, competition, and capital formation. The proposal likely will not affect efficiency, competition, or capital formation given that no securities are traded on the SCOR Marketplace and none were likely to do so in the near future. 15 U.S.C. 78c(f).

[7] 17 CFR 200.30–3(a)(12).

Jonathan G. Katz,
Secretary.

Exhibit A

Text of the Proposed Rule Change [8]

RULE 3

LISTINGS

¶ 356 General Provisions and Definitions

Rule 3.1(a). No change.

Rule 3.1(b) Definitions. The following terms used in Rules 3.2 through 3.5 shall, unless otherwise indicated, have the meanings herein specified:

* * * * *

[(14) The term ''Small Corporate Offering Registration Securities'' (''SCOR Securities'') means a single class of an issuer that has been designated as common stock and/or preferred stock issued pursuant to:

(i) Regulation A under the Securities Act of 1933 (''Securities Act'') and using the prescribed form as applicable; or

(ii) Rule 504 under the Securities Act and using Form U–7 of the North American Securities Administrators Association (''NASAA'') (or state variation of such form with substantially similar requirements).

(15) Once SCOR Securities have been accepted for listing on the Exchange, all securities of that class shall be considered to be SCOR Securities for purposes of this rule 3.1(b)(14), except those securities of the class that are subject to restrictions (i.e., securities restricted pursuant to federal or state securities laws, by any other law, by agreement, or in any other manner) that make them ineligible for trading on the Exchange.]

* * * * *

¶ 3567 Applications to List

Rule 3.2(a) No change.

* * * * *

Listing Requirements

General

Rule 3.2(b) The Exchange has a [multi-tiered] *two-tier* listing structure. Any security listed pursuant to this Rule 3.2, paragraphs (c) through (j), and any equity option listed in accordance with Rule 3.6 and any index product listed in accordance with Rules 7 or 8 shall be designated as a Tier I security except for any security listed under Tier II [or SCOR] listing requirements; provided, however, that a security that is convertible into or carries a right to subscribe to purchase common stock will be a Tier II security unless the common stock into which it is convertible qualifies for inclusion under the Tier I designation. Furthermore, in cases where a company's security does not qualify for inclusion under the Tier I designation, yet the security is listed or has been approved for listing on either the New York Stock Exchange (''NYSE''), American Stock Exchange (''AMEX'') (except for so-called ''ECM'' securities), or NASDAQ National Market System (''NASDAQ/NMS''), the Exchange may list such security under Tier II in reliance upon the listing requirements of the applicable exchange (or association).

A listing under the Tier I designation generally signifies that the company has achieved maturity and high status in its industry in terms of assets, earnings and shareholder interest and acceptance. The Tier II designation is limited, except for specific circumstances as discussed above, to the listing of common stock, preferred stock, bonds and debentures, and warrants. A listing under the Tier II designation generally signifies that the company has limited commercial operations, lower capitalization, and lacks a demonstrated earnings history. [Any security listed under the SCOR listing requirements constitute a third tier, however, solely for purposes of the application of ''exchange listing'' exemptions applicable to ''issuer'' transactions under the securities laws of the various states and territories of the United States, SCOR securities are not deemed to be ''listed'' on the Exchange.]

* * * * *

Designation of Tier I Securities Initial Listing Requirements

Common Stock—Select Market Companies

Rule 3.2(c) No change.

* * * * *

Basic Listing Requirements

* * * * *

No change.

Alternate Listing Requirements

* * * * *

No change.

Preferred Stock and Similar Issues

Rule 3.2(d) No change.

* * * * *

Bonds and Debentures

Rule 3.2(e) No change.

* * * * *

Warrants

Rule 3.2(f) No change.

* * * * *

Contingent Value Rights (''CVRs'')

Rule 3.2(g) No change.

* * * * *

Unit Investment Trusts (''UTs'')

Rule 3.2(h) No change.

* * * * *

Limited Partnerships

Rule 3.2(i) No change.

* * * * *

Other Securities

Rule 3.2(j)(1) No change.

* * * * *

Paragraphs (k) through (m). Reserved.

Designation of Tier II Securities

Initial Listing Requirements

Common Stock—Development Stage Companies

Rule 3.2(n) No change.

* * * * *

Basic Listing Requirements

No change.

* * * * *

Alternate Listing Requirements

No change.

* * * * *

Rule 3.2(o) No change.

* * * * *

Bonds and Debentures

Rules 3.2(p) No change.

* * * * *

Warrants

Rule 3.2(q) No change.

* * * * *

[Rule 3.2(r)—Deleted]

Paragraphs *(r)*, (s) and (t). Reserved.

* * * * *

¶ 3573 Corporate Governance and Disclosure Policies

Rule 3.3. The Exchange shall require that specific corporate governance and disclosure policies be established by domestic issuers of any equity security listed pursuant to Rule 3.2. The Exchange, however, will not require an issuer of such security under [either] the Tier II [or SCOR] designation[s] to comply with the provision for an audit committee as set forth in this Rule 3.3(b).

* * * * *

Corporate Governance

Rule 3.3(a) No change.

* * * * *

[8] Proposed new text is italicized, deleted text is bracketed.

Rule 3.3(b) No change.

* * * * *

Rule 3.3(c) No change.

* * * * *

Rule 3.3(d) No change.

* * * * *

Rule 3.3(e) No change.

* * * * *

Rule 3.3(f) No change.

* * * * *

Rule 3.3(g) No change.

* * * * *

Rule 3.3(h) No change.

* * * * *

Paragraphs (i) through (s). Reserved.

Disclosure Policies

Rule 3.3(t) No change.

* * * * *

¶3579 Suspension of Issuer Withdrawal from Listing

Rule 3.4(a). No change.
Rule 3.4(b). No change.

¶3585 Maintenance Requirements and Delisting Procedures

Rule 3.5(a). No change.

* * * * *

Tier I Securities

Maintenance Requirements

Common Stock—Select Market Companies

Rule 3.5(b) No change.

* * * * *

Preferred Stock and Similar Issues

Rule 3.5(c) No change.

* * * * *

Bonds and Debentures

Rule 3.5(d) No change.

* * * * *

Warrants

Rule 3.5(e) No change.

* * * * *

Contingent Value Rights (''CVRs'')

Rule 3.5(f) No change.

Unit Investment Trusts (''UITs'')

* * * * *

Rule 3.5(g) No change.

* * * * *

Paragraphs (h) through (l). Reserved.

Tier II Securities

Maintenance Requirements

Common Stock—Development Stage Companies

Rule 3.5(m) No change.

* * * * *

Preferred Stock and Similar Issues

Rule 3.5(n) No change.

* * * * *

Bonds and Debentures

Rule 3.5(o) No change.

* * * * *

Warrants

Rule 3.5(p). No change.

* * * * *

Paragraphs (q) *and (r).* Reserved.
[Rule 3.5(r)—Deleted]

Other Reasons for Suspending or Delisting

Rule 3.5(s) No change.

* * * * *

Delisting Procedures

Rule 3.5(t) No change.

* * * * *

Options

¶ 3591

Rule 3.6 No change.
Rule 3.6(a) No change.

* * * * *

Rule 3.6(b) No change.

* * * * *

Rule 3.6(c) No change.

* * * * *

Rule 3.6(d) No change.

* * * * *

* * * * *

¶3598 Withdrawal of Approval of Underlying Securities

Rule 3.7(a). No change.

* * * * *

Rule 3.7(b). No change.

* * * * *

[SCOR Marketplace [9]

Original Listings

The Original Listing fees are fixed fees and issuers are not charged by the number of shares being listed.

Common Stock—$5,000.00
Preferred Stock—$5,000.00

Processing Fee

*Per Original Listing Application—$500.00
Name Change—$250.00
Change in Par Value—$250.00

***** This is a fixed charge for the review of potential listings and is non-refundable. Issues approved for listing may have this charge credited toward the original listing fee.

Substitution of Original Listing

Per Application: Fixed charge of $750.00

Substitution may occur as a result of a change in state of incorporation, reincorporation under laws of same state, a reverse stock split, recapitalizations, or similar events.

Listing of Additional Shares

Per Application: $.0025 per share
Minimum charge of $500.00
Maximum charge of $2,500.00
Maximum charge of $5,000.00 per annum

Annual Maintenance Fee

For one issue—$1,000.00
For each additional issue—$500.00

Payable January of each year following listing.

Conversion Fee

Conversion from the SCOR Marketplace to Tiers I or II.
Common Stock—$15,000.00

[FR Doc. 98–12143 Filed 5–6–98; 8:45 am]

BILLING CODE 8010–01–M

[9] This fee schedule was part of a previous Exchange rule filing. *See* Exchange Act Release No. 35636 (April 21, 1995) 60 FR 20781 (April 27, 1995) (order approving new listing fees for SCOR Securities, SR–PSE–95–03).

SECURITIES AND EXCHANGE COMMISSION

[Release No. 34–39940; International Series Release No. 1131; File No. SR–PHLX–98–17]

Self-Regulatory Organizations; Notice of Filing and Order Granting Accelerated Approval of Proposed Rule Change by the Philadelphia Stock Exchange, Inc., Relating to Listing and Trading Options on the European Currency Unit

April 30, 1998.

Pursuant to Section 19(b)(1) of the Securities Exchange Act of 1934 (''Act''),[1] and Rule 19b–4 thereunder,[2] notice is hereby given that on April 6, 1998, the Philadelphia Stock Exchange (''PHLX'' or ''Exchange'') filed with the Securities and Exchange Commission (''SEC'' or ''Commission'') the proposed rule change as described in Items I and II below, which Items have been prepared by the PHLX. On April 27, 1998, the Exchange filed Amendment No. 1 to the proposed rule change.[3] The

[1] 15 U.S.C. 78s(b)(1).

[2] 17 CFR 240.19b–4.

[3] In Amendment No. 1, the PHLX proposes to amend its filing so that the position limits for the European Currency Unit will be 200,000 contracts on the same side of the market, rather than 100,000 contracts, as originally proposed. In addition, in Amendment No. 1, the PHLX agrees that it will consult with the Commission, prior to the conversion to the Euro on January 1, 1999, to determine whether a Rule 19b–4 filing is necessary.

Commission is publishing this notice to solicit comments on the proposed rule change from interested persons and is granting accelerated approval to the proposed rule change, as amended.

I. Self-Regulatory Organization's Statement of the Terms of Substance of the Proposed Rule Change.

The Exchange proposes to relist for trading options on the European Currency Unit (''ECU''). The Exchange seeks to trade this product prior to the European Summit scheduled for May 2 and 3, 1998, in order to attract order flow based on a renewed interest in the ECU as well as growing interest in the events surrounding the eventual introduction of a single European currency, the Euro. The text of the proposed rule change is available at the Office of the Secretary, the PHLX, and at the Commission.

II. Self-Regulatory Organization's Statement of the Purpose of, and the Statutory Basis for, the Proposed Rule Change

In its filing with the Commission, the PHLX included statements concerning the purpose of and basis for the proposed rule change and discussed any comments its received on the proposed rule change. The text of these statements may be examined at the places specified in Item III below. The PHLX has prepared summaries, set forth in sections A, B, and C below, of the most significant aspects of such statements.

A. Self Regulatory Organization's Statement of the Purpose of, and Statutory Basis for, the Proposed Rule Change

1. Purpose

In July 1997, the Exchange delisted options on the ECU from the non-customized environment.[4] Specifically, Rule 1009 provides that options on the ECU are only available as customized options traded pursuant to Rule 1069. However, with the advent of the Euro, customers as well as the membership have expressed interest in reintroducing options on the ECU in the non-customized environment. In January of 1999, the ECU is scheduled to convert to the Euro on a one-to-one basis. During the Summit planned for early May 1998, the European Council Heads of State should determine which member states fulfill the necessary conditions outlined in the Maastrict Treaty and will participate in the European Monetary Union (''EMU'') in January of 1999. On January 1, 1999, the conversion rate will be set for all European currencies which are participating in the EMU. The ECU should thus convert to the ''Euro'' at that time.[5] In order to provide a trading opportunity for investors, the Exchange proposes to list for trading European [6] and relist American [7] style options on the ECU.[8]

With respect to the ECU option proposed at this time, the contract size for the ECU will be 62,500 ECUs.[9] The premium will be $.0044 per unit or $275 for an option contract having a unit of trading of 62,500, pursuant to Rule 1033. Pursuant to Rule 1014, the bid-ask differential for the ECU options will be .$0005 between the bid and the offer for each option contract for which the bid is $.0050 or less; no more than $.0010 where the bid is more than $.0050 but does not exceed $.0200; and no more than $.0015 where the bid is more than $.0200. The initial margin for the ECU would be 4%,[10] as it was prior to delisting and is currently in the customized environment.

2. Statutory Basis

The Exchange believes that re-listing the ECU option allows investors to take advantage of the planned conversion to the Euro at a time when the European markets are the most volatile. In addition, the advent of the Euro should promote trading and investment in the global currency markets. For the reasons above, the Exchange believes that the proposed rule change is consistent with Section 6 of the Act [11] in general, and in particular with Section 6(b)(5),[12] in that it is designed to promote just and equitable principles of trade, prevent fraudulent and manipulative acts and practices, and facilitate transactions in securities and remove impediments to and perfect the mechanism of a free and open market and a national market system.

B. Self-Regulatory Organization's Statement on the Burden on Competition

The PHLX does not believe that the proposed rule change will impose any inappropriate burden on competition.

C. Self-Regulatory Organization's Statement on Comments on the Proposed Rule Change Received From Members, Participants or Others

No written comments were solicited or received at the time of the filing.

III. Solicitation of Comments

Interested persons are invited to submit written data, views and arguments concerning the foregoing, including whether the proposed rule change, as amended, is consistent with the Act. Persons making written submissions should file six copies thereof with the Secretary, Securities and Exchange Commission, 450 Fifth Street, N.W., Washington, DC 20549. Copies of the submissions, all subsequent amendments, all written statements with respect to the proposed rule change that are filed with the Commission, and all written communications relating to the proposed rule change between the Commission and any person, other than those that may be withheld from the public in accordance with the provisions of 5 U.S.C. 552, will be available for inspection and copying at the Commission's Public Reference Room, 450 Fifth Street, N.W., Washington, DC 20549. Copies of such filing will also be available for inspection and copying at the principal office of the PHLX. All submissions should refer to File No. SR–PHLX–98–17, and should be submitted by May 28, 1998.

See Letter from Nandita Yagnik, Counsel, PHLX, to Sharon Lawson, Senior Special Counsel, Division of Market Regulation (''Division''), Commission, dated April 23, 1998.

[4] *See* Securities Exchange Act Release No. 38764 (June 24, 1997) 62 FR 35535 (July 1, 1997) (SR–PHLX–97–26).

[5] The Exchange agrees that before trading in Euro options, it will consult with the Commission to determine whether a Rule 19b–4 filing pursuant to Section 19(b) of the Act is necessary. *See* Amendment No. 1, *supra* note 3.

[6] *See* PHLX Rule 1000(b)35, which defines European style as an option contract that may be exercised only on the day that it expires.

[7] *See* Rule 1000(b)34, which defines American style as an option contract that may be exercised at any time until its expiration.

[8] According to the Exchange, although the PHLX had been granted approval to list and trade both European and American style non-customized options on the ECU, only American style non-customized options had been listed and traded by the Exchange. Telephone conversation between Nandita Yagnik, Counsel, PHLX, and Deborah Flynn, Attorney, Division, Commission, on April 28, 1998.

[9] The specifications for the proposed ECU options are identical to those applied to the ECU options previously traded on the PHLX. In addition, we note that the same option trading rules that applied to trading the former ECU contract will apply to the new contract.

[10] Currently, the consumer margin requirement, composed of an add-on percentage for all PHLX currency options, is 4% of the underlying contract value (with the exception of the Italian lira and the Spanish peseta, which is 7%, and the Mexican peso, which is 17%). A proposed rule change has been filed with the Commission to calculate the add-on percentage based on the three-year historical volatility of the respective currency. In the case of the ECU, the anticipated customer margin levels using the proposed methodology would be 3% at this time. *See* Securities Exchange Act Release No. 39856 (April 13, 1998) 63 FR 19554 (April 20, 1998) (SR–PHLX–97–63).

[11] 15 U.S.C. 78f.

[12] 15 U.S.C. 78f(b)(5).

IV. Commission's Findings and Order Granting Accelerated Approval of the Proposed Rule Change

The Commission finds the proposed rule change is consistent with the requirements of the Act and the rules and regulations thereunder applicable to a national securities exchange.[13] Specifically, the Commission believes the proposal is consistent with Section 6(b)(5) of the Act,[14] which requires that the rules of an exchange be designed to promote just and equitable principles of trade, to remove impediments to and perfect the mechanism of a free and open market and a national market system, and in general, to protect investors and the public interest.

The Commission believes that relisting and trading non-customized ECU options should benefit investors, as it will provide investors with greater opportunity to take advantage of the planned conversion to the Euro at a time interest in the ECU may be high. The Commission believes that trading options on the ECU should provide investors with an efficient and effective means of hedging the risks associated with the ECU. In addition, in approving the reintroduction of the non-customized ECU options, we note that they will be trading under the same terms and conditions and the previously traded ECU options. Thus, the reintroduction of ECU options has not raised any new regulatory issues.

The Commission notes, however, that this approval order does not grant the Exchange approval to trade options on the Euro. Instead, the PHLX has agreed that before trading in options on the Euro, it will consult with the Commission to determine whether a Rule 19b–4 filing under Section 19(b) of the Act is necessary.[15] In addition, the Commission notes that, assuming the terms and conditions of the Euro remain the same as those of the ECU, the Exchange still would need to address the manner in which the ECU would be converted to the Euro.

The Commission finds good cause for approving the proposed rule change prior to the 30th day after its publication in the **Federal Register**. The Commission notes that accelerated approval will enable the Exchange to trade in non-customized ECU options prior to the European Summit scheduled for May 2 and 3, 1998. As noted above, relisting options on the ECU under the same terms, conditions, and subject to the same trading rules as the previous ECU options contracts raises no new issues of regulatory concern. For the foregoing reasons, the Commission believes that good cause exists pursuant to Section 19(b)(2) of the Act[16] to approve the proposed rule change, as amended, on an accelerated basis.

It is therefore ordered, pursuant to Section 19(b)(2) of the Act,[17] that the amended proposed rule change (SR–PHLX–98–17) is hereby approved on an accelerated basis.

For the Commission, by the Division of Market Regulation, pursuant to delegated authority.[18]

Jonathan G. Katz,

Secretary.

[FR Doc. 98–12146 Filed 5–6–98; 8:45 am]

BILLING CODE 8010–01–M

[13] In approving this rule, the Commission notes that it has considered the proposed rule's impact on efficiency, competition, and capital formation. 15 U.S.C. 78c(f).

[14] 15 U.S.C. 78f(b)(5).

[15] *See* Amendment No. 1, *supra* note 3.

[16] 15 U.S.C. 78s(b)(2).

[17] *Id.*

[18] 17 CFR 200.30–3(a)(12).

SMALL BUSINESS ADMINISTRATION

[Declaration of Disaster #3076, Amdt. 1]

State of Alabama

In accordance with notices from the Federal Emergency Management Agency dated April 17, 18, and 20, 1998, the above-numbered Declaration is hereby amended to include Covington and Cullman Counties in the State of Alabama as a disaster area due to damages caused by severe storms and tornadoes, and to establish the incident period for this disaster as beginning on April 8, 1998 and continuing through April 20, 1998.

In addition, applications for economic injury loans from small businesses located in the contiguous counties of Butler, Coffee, Conecuh, Crenshaw, Ecambia, Geneva, Lawrence, Marshall, Morgan, and Winston in Alabama, and Okaloosa and Walton Counties in Florida may be filed until the specified date at the previously designated location. Any counties contiguous to the above-named primary counties and not listed herein have been previously declared.

All other information remains the same, i.e., the deadline for filing applications for physical damage is June 8, 1998 and for economic injury the termination date is January 11, 1999.

The economic injury number for Florida is 985200.

(Catalog of Federal Domestic Assistance Program Nos. 59002 and 59008)

Dated: April 28, 1998.

Bernard Kulik,

Associate Administrator for Disaster Assistance.

[FR Doc. 98–12077 Filed 5–6–98; 8:45 am]

BILLING CODE 8025–01–P

SMALL BUSINESS ADMINISTRATION

[Declaration of Disaster #3045, Amdt. 8]

State of Florida

In accordance with notices from the Federal Emergency Management Agency dated April 17 and April 24, 1998, the above-numbered Declaration is hereby amended to include Bay County, Florida as a disaster area due to damages caused by severe storms, high winds, tornadoes, and flooding. This Declaration is further amended to establish the incident period for this disaster as beginning on December 25, 1997 and continuing through April 24, 1998.

All counties contiguous to the above-name county have been previously declared.

All other information remains the same, i.e., the deadline for filing applications for physical damage is May 6, 1998 and for economic injury the termination date is October 6, 1998.

(Catalog of Federal Domestic Assistance Program Nos. 59002 and 59008)

Dated: April 29, 1998.

James E. Rivera,

Acting Associate Administrator for Disaster Assistance.

[FR Doc. 98–12079 Filed 5–6–98; 8:45 am]

BILLING CODE 8025–01–P

SMALL BUSINESS ADMINISTRATION

[Declaration of Disaster #3069, Amdt. 6]

State of Georgia

In accordance with notices from the Federal Emergency Management Agency dated April 24, 1998, the above-numbered Declaration is hereby amended to include the following counties in the State of Georgia as a disaster area due to damages caused by severe storms and flooding beginning on February 14, 1998 and continuing: Barrow, Bartow, Cherokee, Dade, Lumpkin, Murray, Paulding, Pickens, Walker, and Wayne.

In addition, applications for economic injury loans from small businesses located in the following contiguous counties may be filed until the specified date at the previously designated location: Catoosa, Clarke, and Oconee Counties in Georgia; Jackson and De Kalb Counties in Alabama; and Bradley,

Hamilton, Marion, and Polk Counties in Tennessee. Any counties contiguous to the above-named primary counties and not listed herein have been previously declared.

The economic injury number for Tennessee is 985100.

All other information remains the same, i.e., the deadline for filing applications for physical damage is May 10, 1998 and for economic injury the termination date is December 11, 1998.

Dated: April 27, 1998.

(Catalog of Federal Domestic Assistance Program Nos. 59002 and 59008)

Bernard Kulik,

Associate Administrator for Disaster Assistance.

[FR Doc. 98–12078 Filed 5–6–98; 8:45 am]

BILLING CODE 8025–01–P

SMALL BUSINESS ADMINISTRATION

[Declaration of Economic Injury Disaster #9846]

State of Oregon and Contiguous Counties in California

Coos and Curry Counties and the contiguous Counties of Douglas and Josephine in the State of Oregon, and Del Norte County in the State of California constitute an economic injury disaster area due to the effects of the warm water current known as El Nino beginning in August 1997. Eligible small businesses and small agricultural cooperatives without credit available elsewhere may file applications for economic injury assistance for this disaster until the close of business on January 28, 1999 at the address listed below or other locally announced locations:

Small Business Administration, Disaster Area 4 Office, P.O. Box 13795, Sacramento, CA 95853–4795.

The interest rate for eligible small businesses and small agricultural cooperatives is 4 percent.

The economic injury number for California is 984700.

(Catalog of Federal Domestic Assistance Program No. 59002)

Dated: April 28, 1998.

Aida Alvarez,

Administrator.

[FR Doc. 98–12080 Filed 5–6–98; 8:45 am]

BILLING CODE 8025–01–P

SMALL BUSINESS ADMINISTRATION

[Declaration of Disaster #3078]

State of Tennessee

As a result of the President's major disaster declaration on April 20, 1998, and amendments thereto on April 22 and 23, I find that the following counties in the State of Tennessee constitute a disaster area due to damages caused by severe storms, tornadoes, and flooding beginning on April 16, 1998 and continuing: Anderson, Bradley, Campbell, Claiborne, Crockett, Davidson, Dickson, Dyer, Hancock, Knox, Lawrence, Loudon, Maury, Morgan, Pickett, Rhea, Robertson, Sevier, Union, Wayne, and Wilson. Applications for loans for physical damages may be filed until the close of business on June 19, 1998, and for loans for economic injury until the close of business on January 20, 1999 at the address listed below or other locally announced locations: Small Business Administration, Disaster Area 2 Office, One Baltimore Place, Suite 300, Atlanta, GA 30308.

In addition, applications for economic injury loans from small businesses located in the following contiguous counties may be filed until the specified date at the above location: Bledsoe, Blount, Cannon, Cheatham, Clay, Cocke, Cumberland, Decatur, DeKalb, Fentress, Gibson, Giles, Grainger, Hamilton, Hardin, Hawkins, Haywood, Hickman, Houston, Humphreys, Jefferson, Lake, Lauderdale, Lewis, Madison, Marshall, McMinn, Meigs, Monroe, Montgomery, Obion, Overton, Perry, Polk, Roane, Rutherford, Scott, Smith, Sumner, Trousdale, and Williamson Counties in Tennessee; Bell Clinton, Logan, McCreary, Simpson, Todd, Wayne, and Whitley Counties in Kentucky; Lauderdale and Limestone Counties in Alabama, Lee and Scott Counties in Virginia; Haywood and Swain Counties in North Carolina, and Catoosa, Murray, and Whitfield Counties in Georgia.

The interest rates are:

	Percent
Physical Damage:	
Homeowners with credit available elsewhere	7.000
Homeowners without credit available elsewhere	3.500
Businesses with credit available elsewhere	8.000
Businesses and non-profit organizations without credit available elsewhere	4.000
Others (including non-profit organizations) with credit available elsewhere	7.125
For Economic Injury:	
Businesses and small agricultural cooperatives without credit available elsewhere	4.000

The number assigned to this disaster for physical damage is 307812. For economic injury the numbers are 983800 for Tennessee, 983900 for Kentucky, 984000 for Alabama, 984800 for Virginia, 984900 for North Carolina, and 985000 for Georgia.

Dated: April 28, 1998.

(Catalog of Federal Domestic Assistance Program Nos. 59002 and 59008)

Bernard Kulik,

Associate Administrator for Disaster Assistance.

[FR Doc. 98–12081 Filed 5–6–98; 8:45 am]

BILLING CODE 8025–01–P

SOCIAL SECURITY ADMINISTRATION

Information Collection Activities: Proposed Collection Requests and Comment Requests

This notice lists information collection packages that will require submission to the Office of Management and Budget (OMB), as well as information collection packages submitted to OMB for clearance, in compliance with Public Law 104–13 effective October 1, 1995, The Paperwork Reduction Act of 1995.

I. The information collection(s) listed below require(s) extension(s) of the current OMB approval(s) or are proposed new collection(s):

1. Representative Payee Report—0960–0068. Forms SSA–6230 and SSA–623 are used by the Social Security Administration (SSA) to determine the continuing suitability of an individual/organization to serve as representative payee. Form SSA–6230 is sent to parents, stepparents and grandparents with custody of minor children receiving Social Security benefits.

Form SSA–623 is sent to all other payees with or without custody of the beneficiary. The respondents are individuals and organizations who serve as representative payees for SSI and Social Security beneficiaries.

	SSA–623	SSA–6230
Number of Respondents	3,350,875	2,099,298.

	SSA–623	SSA–6230
Frequency of Response	1	1.
Average Burden Per Response	15 minutes	15 minutes.
Estimated Annual Burden	837,719 hrs	524,824 hrs.

2. Request for Social Security Earnings Statement—0960–0525. The information on Form SSA–7050 is used by SSA to identify the requestor, to define the earnings information being requested, and to inform the requester of the fee for such information. Based on the information provided, SSA produces the requested statement. The respondents are individuals and organizations that use this form to request statements of earnings from SSA.

Number of Respondents: 44,000.
Frequency of Response: 1.
Average Burden Per Response: 11 minutes.
Estimated Average Burden: 8,067 hours.

3. Request for Change in Time/Place of Disability Hearing—0960–0348. The information on Form SSA–769 is used by the Social Security Administration (SSA) to provide claimants with a structured format to exercise their right to request a change in the time or place of a scheduled disability hearing. The information will be used as a basis for granting or denying requests for changes and for rescheduling hearings. The respondents are claimants who wish to request a change in the time or place of their disability hearing.

Number of Respondents: 7,483.
Frequency of Response: 1.
Average Burden Per Response: 8 minutes.
Estimated Average Burden: 998 hours.

4. Request for Reconsideration—Disability Cessation— 0960–0349. The information on Form SSA–789 is used by SSA to schedule hearings and to develop additional evidence for individuals who have received an initial or revised determination that their disability ceased, did not exist, or is no longer disabling. The respondents are disability beneficiaries who file a claim for reconsideration.

Number of Respondents: 15,015.
Frequency of Response: 1.
Average Burden Per Response: 12 minutes.
Estimated Average Burden: 3,003 hours.

5. Summary of Evidence—0960–0430. The information on Form SSA–887 is used by State Disability Determination Services (DDS) to provide claimants with a list of medical/vocational reports pertaining to their disability. The form will aid claimants in reviewing the evidence in their folders and will be used by hearing officers in preparing for and conducting hearings. The respondents are State DDSs that make disability determinations.

Number of Respondents: 22,024.
Frequency of Response: 1.
Average Burden Per Response: 15 minutes.
Estimated Average Burden: 5,506 hours.

6. Report of Work Activity—Notice of Continuing Disability—0960–0108. The information collected on Form SSA–3945 will be used by SSA to determine whether an individual's work after entitlement to disability is cause for that entitlement to end. The respondents are individuals who report earnings after their entitlement to disability benefits.

Number of Respondents: 140,000.
Frequency of Response: 1.
Average Burden Per Response: 45 minutes.
Estimated Average Burden: 105,000 hours.

7. Employee Identification Statement—0960–0473. The information on Form SSA–4156 is used by SSA to resolve situations where two or more individuals have used the same Social Security Number (SSN), and an employer has erroneously reported earnings under an SSN. The respondents are employers involved in erroneous wage reporting.

Number of Respondents: 4,750.
Frequency of Response: 1.
Average Burden Per Response: 10 minutes.
Estimated Average Burden: 792 hours.

Written comments and recommendations regarding the information collection(s) should be sent within 60 days from the date of this publication, directly to the SSA Reports Clearance Officer at the following address: Social Security Administration, DCFAM, Attn: Nicholas E. Tagliareni, 6401 Security Blvd., 1–A–21 Operations Bldg., Baltimore, MD 21235.

In addition to your comments on the accuracy of the agency's burden estimate, we are soliciting comments on the need for the information; its practical utility; ways to enhance its quality, utility and clarity; and on ways to minimize burden on respondents, including the use of automated collection techniques or other forms of information technology.

II. The information collection(s) listed below have been submitted to OMB:

1. Disability Hearing Officer's Report of Disability—0960–0507. The information on Form SSA–1204-BK is used by the Disability Hearing Officer (DHO) to conduct and document disability hearings and to provide a structured format that covers all conceivable issues relating to SSI claims for disabled children. The completed Form SSA–1204–BK will aid the DHO in preparing the disability decision and will provide a record of what transpired at the hearing. The respondents are DHOs in the State Disability Determination Services (DDS).

Number of Respondents: 100,000.
Frequency of Response: 1.
Average Burden Per Response: 60 minutes.
Estimated Annual Burden: 100,000 hours.

2. Disability Hearing Officer's Report of Disability Hearing—0960–0440. The information on Form SSA–1205 is used by DHOs to conduct and record disability hearings for adults. The form serves as a guide in conducting the hearings and ensures that all pertinent issues are considered. The respondents are DHOs in the State DDSs.

Number of Respondents: 100,000.
Frequency of Response: 1.
Average Burden Per Response: 60 minutes.
Estimated Annual Burden: 100,000 hours.

3. Disability Hearing Officer's Decision—0960–0441. The DHO uses the information on Form SSA–1207 and the supplements—which apply to the type of claim involved—in preparing the disability decision. The form will aid the DHO in addressing the crucial elements of the case in a sequential and logical fashion. The respondents are DHOs in the State DDSs.

Number of Respondents: 100,000.
Frequency of Response: 1.
Average Burden Per Response: 45 minutes.
Estimated Annual Burden: 75,000 hours.

4. Chinese Custom Marriage Statement (By One or Both of the Parties); and Statement Regarding Chinese Custom Marriage—0960–0086. The information on Forms SSA–1344 and 1345 is used by SSA to determine if an alleged spouse of the

numberholder is legally married, in order to be paid Social Security benefits. The respondents are individuals applying for benefits based upon a Chinese custom marriage or individuals who attended the marriage ceremony.

	SSA–1344	SSA–1345
Number of Respondents	100	100.
Frequency of Response	1	1.
Average Burden Per Response	14 minutes	14 minutes.
Estimated Annual Burden	23 hours	23 hours.

5. Student's Statement Regarding School Attendance—0960–0105. The information on Form SSA–1372 is used by SSA to determine if a claimant is entitled to Social Security benefits as a student. The respondents are student claimants for Social Security benefits.

Number of Respondents: 200,000.

Frequency of Response: 1.

Average Burden Per Response: 10 minutes.

Estimated Annual Burden: 33,333 hours.

6. Application for Benefits under the Italy-U.S. International Social Security Agreement—0960–0445. The information on Form SSA–2528 is used by SSA to determine if a resident of Italy is eligible for Social Security benefits under the Italy-U.S. Social Security agreement. The respondents are Italian residents who file for U.S. benefits with the Italian Social Security Agency.

Number of Respondents: 200.

Frequency of Response: 1.

Average Burden Per Response: 20 minutes.

Estimated Annual Burden: 67 hours.

Written comments and recommendations regarding the information collection(s) should be directed within 30 days to the OMB Desk Officer and SSA Reports Clearance Officer at the following addresses:

(OMB) Office of Management and Budget, OIRA, Attn: Laura Oliven, New Executive Office Building, Room 10230, 725 17th St., NW, Washington, D.C. 20503

(SSA) Social Security Administration, DCFAM, Attn: Nicholas E. Tagliareni, 1–A–21 Operations Bldg., 6401 Security Blvd., Baltimore, MD 21235.

To receive a copy of any of the forms or clearance packages, call the SSA Reports Clearance Officer on (410) 965–4125 or write to him at the address listed above.

Date: May 1, 1998.

Nicholas E. Tagliareni,

Reports Clearance Officer, Social Security Administration.

[FR Doc. 98–12152 Filed 5–6–98; 8:45 am]

BILLING CODE 4190–29–U

SOCIAL SECURITY ADMINISTRATION

Testing Modifications to Initial Disability Claim Procedures and Disability Determination Procedures; Test Sites for Disability Claim Manager Positions

AGENCY: Social Security Administration (SSA).

ACTION: Notice of test sites and the duration of tests involving a disability claim manager.

SUMMARY: SSA is announcing the locations and the duration of additional tests that it will conduct under the current rules at 20 CFR 404.906 and 416.1406. Those rules authorize the testing of several modifications to the disability determination procedures and disability claim procedures that we normally follow in adjudicating claims for disability insurance benefits under title II of the Social Security Act (the Act) and claims for supplemental security income (SSI) payments based on disability under title XVI of the Act. This notice announces the test sites and duration of tests involving use of a disability claim manager (DCM).

FOR FURTHER INFORMATION CONTACT: Richard Fussell, DCM Test Lead, Office of the Commissioner, Disability Process Redesign Team, Social Security Administration, 6401 Security Boulevard, Baltimore, Maryland, 21235, 410–965–9230.

SUPPLEMENTARY INFORMATION: Current regulations at §§ 404.906 and 416.1406 authorize us to test several different modifications to the disability determination procedures. In our regulations, we explained that prior to commencing each test or group of tests, we would publish a notice in the **Federal Register** describing the model(s) that we will test, where the test sites will be and the duration of the tests. SSA is announcing the locations and the duration of tests involving a DCM that it will conduct under the authority of these regulations. On or about May 11, 1998, we will begin testing the DCM process at the test sites listed below (some of which are located at federal sites and some of which are located at state sites).

Under SSA's *Plan for a New Disability Claim Process* approved by the Commissioner of Social Security in September 1994 (the disability redesign plan), the DCM will be the focal point for medical and non-medical claim activities from the time an initial claim for disability benefits is filed until an initial determination is made on the claim. The DCM may be either a State agency employee or a Federal employee and may be assisted by other individuals. When an application for benefits based on disability is handled by a DCM, the DCM will explain the disability programs and how we determine whether all the requirements for disability benefits are met. The DCM will explain what will be expected of the applicant during the claims process and provide information or assistance to the applicant, as necessary. The DCM will also provide information regarding the claimant's right to representation and will provide appropriate referral sources for representation.

The DCM will manage the case from intake to point of determination. He/she may work in a team environment with access to experts such as medical or vocational consultants and technicians such as specialist coaches for advice and guidance. A Claims Support Specialist (CSS) may also provide assistance in the non-medical aspects of the disability workload for the Federal and State DCM. DCM cases will be limited to initial adult title II and title XVI disability claims that can be fully processed through SSA's automated systems.

The DCM will make the initial disability determination, after any appropriate consultation with a medical or psychological consultant, and will obtain the forms used to certify the medical consultant's concurring signature on the disability determination to SSA. The DCM will also determine whether other conditions of eligibility (for benefits for disability cases associated with programs administered by SSA) are met. However, when the DCM is a State agency employee, a Federal employee will make the final determination regarding whether the other conditions for

entitlement to benefits are met (as required by law).

We will continue the tests for approximately 36 months. We plan to test the use of a DCM in 35 sites located in 15 states. The sites selected represent a mix of geographic areas and case loads. We will publish another notice in the **Federal Register** if we extend the duration of the test or expand the test sites. For the purpose of these tests, a DCM will be either an employee of the State agency that makes disability determinations for SSA or an SSA employee. The testing of the DCM in the sites listed below are separate from, and in addition to, the testing of the Full Process Model which we previously announced on April 4, 1997 (62 FR 16209, 62 FR 16210) and August 1, 1997 (62 FR 41457). Tests of the DCM position will be held at the following locations:

Social Security Administration, Field Office, 2600 Mount Ephraim Ave, Camden, NJ 08104
Social Security Administration, Field Office, 22 Sussex Street, Hackensack, NJ 07302
Social Security Administration, Field Office, Capitol Center Bldg., 2nd Floor, 50 East State Street, Trenton, NJ 08608
Social Security Administration, Field Office, 52 Charles Street, New Brunswick, NJ 08901
Social Security Administration, Field Office, 970 Broad Street, Room 1035, Newark, NJ 07102
Social Security Administration, Field Office, 3733 W University Boulevard, Suite 100, Jacksonville, FL 32217
Social Security Administration, Field Office, 1395 S Marietta Parkway, Building 100, Room 130, Marietta, GA 30067
Social Security Administration, DCM Unit, 100 West Capitol Street, Room 401, Jackson, MS 39201
Social Security Administration, Field Office, 9 St. Emanuel Street, Mobile, AL 36602
Social Security Administration, Field Office, Worthman Mall, Suite 235, 5800 Fairfield Avenue, Fort Wayne, IN 46807
Social Security Administration, Field Office, 575 N Pennsylvania Avenue, Room 617, Indianapolis, IN 46204
Social Security Administration, Field Office, 6951 E 30th Street, Indianapolis, IN 46219
Social Security Administration, Field Office, 2715 W Monroe Street, Springfield, IL 62704
Social Security Administration, Field Office, 1673 S 9th Street, 5th Floor, Milwaukee, WI 53204
Social Security Administration, Field Office, 4120 Oakwood Hills Parkway, Eau Claire, WI 54701
Social Security Administration, Field Office, 850 Nebraska Avenue, Kansas City, KS 66101
Social Security Administration, Field Office, 210 Walnut Street, Federal Building, Room 293, Des Moines, IA 50309
Social Security Administration, DCM Unit, 1616 Champa Street, 4th Floor, Denver, CO 80202
Social Security Administration, DCM Unit, 46 West 300 South, Suite 100, Salt Lake City, UT 84104
Social Security Administration, DCM Unit, 301 South Park, Room 138, Helena, MT 59626
Social Security Administration, Field Office, 7227 North 16th Street, Suite 190, Phoenix, AZ 85020
Social Security Administration, Field Office, McNamara Building, Room 1550, 477 Michigan Avenue, Detroit, MI 48226
Social Security Administration, Field Office, 525 Munson Avenue, Traverse City MI 49686
State of New Jersey, Division of Disability Determination, 506 Jersey Avenue, New Brunswick NJ 08901
State of Alabama, Division of Disability Determinations, 2545 Rocky Ridge Lane, Birmingham AL 35216
State of Georgia, Dept of Human Resources, Div of Rehab Srvcs, Disability Adjudication Sec., 330 W Ponce de Leon Avenue, Decatur GA 30030
State of Florida, Div of Voc Rehab, Div of Disability Determinations, 4140 Woodcock Drive, Jacksonville FL 32254
State of Wisconsin, Div of Voc Rehab, Disability Determination Bureau, 1st Floor Olds Seed Building, 722 Williamson Street, Madison WI 53703
State of Indiana, Div of Aging & Rehab, Disability Determination Bureau, 225 New Jersey Street, Indianapolis IN 46204
State of Illinois, Dept of Rehab Srvcs, Bureau of Disab Determination Srvcs, 100 N 1st Street, 5th Floor, Springfield IL 62702
State of Michigan, Disability Determination Services, 315 East Front Street, Traverse City MI 49684
State of Michigan, Disability Determination Services, 1200 Sixth Street, 10th Floor, Detroit MI 48226
State of Kansas, Dept of Social & Rehab Srvcs, Disability Deter & Referral Srvcs, Suite 100, 3640 SW Topeka Blvd., Topeka KS 66611
State of Iowa, Div of Voc Rehab Srvcs, Disability Determination Services, 510 East 12th Street, Des Moines IA 50319
State of Arizona, Disability Determination Services, 3310 N 19th Avenue, Phoenix AZ 85016

Not all disability cases received in the test sites listed above will be handled under the test procedures. During the test, DCM cases will be randomly selected from initial adult title II and title XVI disability claims that can be fully processed through SSA's automated systems. When a claim is handled by a DCM as part of the test, the claim will be processed under the procedures established under the regulations cited above.

Dated: April 30, 1998.

Sue C. Davis,

Director, Disability Process Redesign Team.

[FR Doc. 98–12153 Filed 5–6–98; 8:45 am]

BILLING CODE 4190–29–P

DEPARTMENT OF STATE

Office of the Secretary

[Public Notice 2799]

Determination With Respect to the Assistance Program for Ukraine

Pursuant to the authority vested in me by subsection (k) under the heading ''Assistance for the New Independent States of the former Soviet Union'' in Title II of the foreign Operations, Export Financing, and Related Programs Appropriations Act, 1998 (Pub. L. 105–118), I hereby determine and certify that the Government of Ukraine has made significant progress toward resolving complaints made by United States investors to the United States Embassy prior to April 30, 1997.

This determination shall be provided to the Congress and published in the **Federal Register.**

Dated: April 28, 1998.

Madeline Albright,

Secretary of State.

Memorandum of Justification Regarding Certification Under Title II of the Foreign Operations, Export Financing, and Related Programs Appropriations Act, 1998 (Pub. L. 105–118)

In reviewing complaints made by twelve U.S. investors or businesses to the United States Embassy in Kiev prior to April 30, 1997, concerning specific problems affecting their operations in Ukraine, the Secretary of State has found that the Government of Ukraine has made significant progress toward resolving those complaints. Our review of these cases found resolution or significant progress towards resolution in seven of the twelve cases. This

finding will allow the Administration to obligate certain funds for assistance to Ukraine which until now had been withheld from obligation under Title II of Pub. L. 105–118, the Foreign Operations, Export Financing, and Related Programs Appropriations Act, 1998.

Ukraine has demonstrated its commitment to strategic partnership with the U.S. and integration into the West. Recent Ukrainian actions on non-proliferation have built on a record of responsible conduct in the security and foreign policy issues that merit continued U.S. support.

The Administration remains seriously concerned, however, about the investment climate and prospects for economic reform in Ukraine. Despite progress on specific complaints by certain U.S. investors, some complaints have not been resolved, and new cases have arisen. In addition, we have seen no evidence of improvement in Ukraine's investment climate and only limited progress toward economic reform. Because a large share of U.S. assistance to Ukraine is provided to support economic reform, and because improvement of Ukraine's investment climate is critical to achieving sustainable economic growth, lack of progress in these areas raises concerns about the usefulness of U.S. assistance to the Government of Ukraine in these sectors.

After reviewing the status of economic reform in Ukraine, we have concluded that assistance currently allocated to support the implementation of specific reforms by the Government of Ukraine would not be used effectively in the absence of concrete progress on economic reform. This includes funds originally intended to provide technical assistance to the Government of Ukraine in such areas as fiscal and budgetary reform, bankruptcy reform, energy sector reform, and the creation of a private agricultural sector. We are therefore withholding these funds from obligation and will reprogram them in a few months to more productive uses within Ukraine unless the Government of Ukraine implements the necessary reforms in these sectors and takes additional steps to resolve outstanding U.S. business cases in Ukraine.

We will continue to monitor progress in Ukraine on reform and in the investment climate, including treatment of U.S. investors in Ukraine, with the goal of ensuring that all U.S. assistance is used effectively to encourage and promote the reforms needed to stimulate sustainable economic growth. We will also continue to monitor the complaints made by U.S. investors which are subject to the certification requirement, as well as other cases which have arisen, to ensure that progress is sustained.

[FR Doc. 96–12158 Filed 5–6–98; 8:45 am]
BILLING CODE 4710–10–M

DEPARTMENT OF TRANSPORTATION

Federal Aviation Administration

RTCA Special Committee 193; Terrain and Airport Databases; Correction

AGENCY: Federal Aviation Administration, DOT.

ACTION: Corrections.

SUMMARY: In notice document 98–10681 on page 19997 in the issue of Wednesday, April 22, 1998 (Vol. 63, No. 77), make the following corrections:

On page 19997 in the first column, under (4) Review Proposed Terms of Reference, add: a. EUROCAE Working Group 44 Terms of Reference; b. Proposed Terms of Reference, RTCA Paper No. 075–98/PMC–006. In the second column, under (7), add a. Summary of Activities Already Performed by Working Group 44 Subgroup 2; b. Review of Previous Working Group 44 Subgroup 2 Meeting Minutes and Action Items. Add a new item: Industry Requirements for Terrain and Obstacle Information for Aeronautical Use: a. Proposed Table of Contents ad Applicable Working Papers; b. Areas to be Covered by This Document; c. Potential Applications; d. Data User Requirements; e. Potential Sources of Data; f. Methods of Data Origination and Compilation; g. Target Date for Completion.

Issued in Washington, DC, on May 1, 1998.

Janice L. Peters,

Designated Official.

[FR Doc. 98–12133 Filed 5–6–98; 8:45 am]
BILLING CODE 4910–13–M

DEPARTMENT OF TRANSPORTATION

Federal Aviation Administration

Notice of Intent to Rule on Application to Impose and Use the Revenue from a Passenger Facility Charge (PFC) at Valley International Airport, Harlington, Texas

AGENCY: Federal Aviation Administration (FAA), DOT.

ACTION: Notice of intent to rule on application.

SUMMARY: The FAA proposes to rule and invites public comment on the application to impose and use the-revenue from a PFC at Valley International Airport under the provisions of the Aviation Safety and Capacity Expansion Act of 1990 (Title IX of the Omnibus Budget Reconciliation Act of 1990) (Public Law 101–508) and Part 158 of the Federal Aviation Regulations (14 CFR Part 158).

DATES: Comments must be received on or before June 8, 1998.

ADDRESSES: Comments on this application may be mailed or delivered in triplicate copies to the FAA at the following address: Mr. Ben Guttery, Federal Aviation Administration, Southwest Region, Airports Division, Planning and Programming Branch, ASW–610D, Fort Worth, Texas 76193–0610.

In addition, one copy of any comments submitted to the FAA must be mailed or delivered to Mr. Jon Mathiasen, Director of Aviation, of Valley International Airport at the following address: Jon E. Mathiasen, A.A.E., Director of Aviation, Valley International Airport, Airport Terminal Building, Harlington, Texas 78550.

Air carriers and foreign air carriers may submit copies of the written comments previously provided to the Airport under Section 158.23 of Part 158.

FOR FURTHER INFORMATION CONTACT: Mr. Ben Guttery, Federal Aviation Administration, Southwest Region, Airports Division, Planning and Programming Branch, ASW–610D, Fort Worth, Texas 76193–0610, (817) 222–5614.

The application may be reviewed in person at this same location.

SUPPLEMENTARY INFORMATION: The FAA proposes to rule and invites public comment on the application to impose and use the revenue from a PFC at Valley International Airport under the provisions of the Aviation Safety and Capacity Expansion Act of 1990 (Title IX of the Omnibus Budget Reconciliation Act of 1990) (Public Law 101–508) and Part 158 of the Federal Aviation Regulations (14 CFR part 158).

On April 27, 1998, the FAA determined that the application to impose and use the revenue from a PFC submitted by the Airport was substantially complete within the requirements of Section 158.25 of Part 158. The FAA will approve or disapprove the application, in whole or in part, no later than August 22, 1998.

The following is a brief overview of the application.

Level of the proposed PFC: $3.00.

Proposed charge effective date: November 1, 1998.

Proposed charge expiration date: October 1, 2001.

Total estimated PFC revenue: $4,024,979.00.

PFC application number: 98–01–C–00–HRL.

Brief description of proposed projects:

Projects To Impose and Use PFC's

Groove Runway 13/31, Airfield Signage, Reconstruct South Apron, Airfield Drainage, Land Acquisition, Part 150 Land Acquisition, Access Roads, Runway and Taxiway Improvements, ARFF Suits, Storm Water Prevention Plan, Replace Access Control System, Reconstruct Air Freight Aprons—North & South, Replace ARFF Vehicles (2), Terminal Jet Bridges (3), Overlay Runway 17L/35R, Concourse Carpet Replacement, FIDS and PA System, PFC Development, Overlay GA Ramps, Overlay Taxiways Bravo and Foxtrot, Joint Seal Air Carrier Parking Apron, Part 150 and Master Plan Update, Airport Entrance Road (Iwo Jima Blvd.), Improve Terminal Drainage, Terminal Roadway Signs, Terminal Upgrade/Improvement, Security Fencing, Runway Sweeper, and Terminal Entrance Road and Arcade Sidewalk.

Proposed class or classes of air carriers to be exempted from collecting PFC's:

All Air Taxi/Commercial Operators filing FAA Form 1800–31.

Any person may inspect the application in person at the FAA office listed above under **FOR FURTHER INFORMATION CONTACT** and at the FAA regional Airports office located at: Federal Aviation Administration, Southwest Region, Airports Division, Planning and Programming Branch, ASW–610D, 2601 Meacham Blvd., Fort Worth, Texas 76137–4298.

In addition, any person may, upon request, inspect the application, notice and other documents germane to the application in person at Valley International Airport.

Issued in Forth Worth, Texas on April 27, 1998.

Edward N. Agnew,

Acting Manager, Airports Division.

[FR Doc. 98–12136 Filed 5–6–98; 8:45 am]

BILLING CODE 4910–13–M

DEPARTMENT OF TRANSPORTATION

Maritime Administration

Voluntary Intermodal Sealift Agreement (VISA) / Joint Planning Advisory Group (JPAG)

AGENCY: Maritime Administration, DOT.

ACTION: Synopsis of April 23–24, 1998 meeting with VISA participants.

On April 23–24, 1998, the Maritime Administration (MARAD) and the United States Transportation Command (USTRANSCOM) co-hosted a meeting of the Voluntary Intermodal Sealift Agreement (VISA) Joint Planning Advisory Group (JPAG) at the United States Transportation Command, Scott Air Force Base, Illinois.

Meeting attendance was by invitation only, due to the nature of the information discussed and the need for a government-issued security clearance. Of the 27 U.S.-flag carrier corporate participants enrolled in VISA at the time of the meeting, 9 were represented, as well as representatives from the Department of Defense (DoD) and the Department of Transportation (DOT).

Government representatives provided operational briefs for the USTRANSCOM command post exercise Turbo Challenge 98 which was the principal focus of the JPAG. During the exercise, VISA Stage III was activated and VISA capacity was allocated. In addition to evaluating previously developed Concepts of Operation, the exercise tested VISA carriers' ability to position vessel capacity to meet VISA Stage III requirements for a major regional contingency.

The full text of the VISA program is published in 62 FR 6837–6845, dated February 13, 1997. One of the program requirements is that MARAD periodically publish a list of VISA participants in the **Federal Register**. As of April 28, 1998, the following commercial U.S.-flag vessel operators are enrolled in VISA with MARAD: Alaska Cargo Transport, Inc., American Auto Carriers, Inc., American Automar, Inc., American President Lines, Ltd., American Ship Management, LLC, Central Gulf Lines, Inc., Crowley Maritime Corporation, Dixie Fuels II, Ltd., Falgout Brothers, Inc., Farrell Lines Incorporated, First American Bulk Carrier Corp., Lykes Lines Limited, L.L.C., Maersk Line Limited, Matson Navigation Company, Inc., Moby Marine Corporation, NPR, Inc., OSG Car Carriers, Inc., Osprey Shipholding Corp., LLC, RR & VO L.L.C., Sealift, Inc., Sea-Land Service, Inc., Smith Maritime, Totem Ocean Trailer Express, Inc., Trailer Bridge, Inc., TransAtlantic Lines LLC, Van Ommeren Shipping (USA) LLC, and Waterman Steamship Corporation.

CONTACT PERSON FOR ADDITIONAL INFORMATION: Raymond R. Barberesi, Director, Office of Sealift Support, (202) 366–2323.

Dated: May 4, 1998.

By order of the Maritime Administrator.

Joel C. Richard,

Secretary.

[FR Doc. 98–12128 Filed 5–6–98; 8:45 am]

BILLING CODE 4910–81–P

DEPARTMENT OF TRANSPORTATION

Surface Transportation Board

[STB Finance Docket No. 33407]

Dakota, Minnesota & Eastern Railroad Corporation Construction Into the Powder River Basin [1]

AGENCY: Surface Transportation Board, DOT.

ACTION: Notice of issuance of procedural schedule.

SUMMARY: The Board has received public comments on the proposed procedural schedule for issuing a decision on the transportation merits of the application and applicant's reply to those comments, and the Board is issuing a final procedural schedule. This schedule provides for issuance of a decision within 180 days of the effective date of this decision that will address the transportation issues relating to this construction application and whether the proposal satisfies the criteria of 49 U.S.C. 10901. Any approval would be conditioned upon completion of the environmental review process and consideration of environmental issues, which would be considered in a final decision on whether to authorize the construction.

DATES: The effective date of this decision is May 7, 1998. Pleadings must be filed in accordance with the attached schedule. All filings, except notices of intent to participate, must be concurrently served on all parties of record and must be accompanied by a certificate of service.

ADDRESSES: Send an original and 10 copies of all pleadings referring to STB Finance Docket No. 33407 to: Surface Transportation Board, Office of the Secretary, Case Control Unit, 1925 K Street, N.W., Washington, DC 20423. To permit concurrent service of pleadings on all parties of record, a service list containing the names and addresses of all parties of record will be issued by the Board in a subsequent notice.

[1] This case was formerly entitled Dakota, Minnesota & Eastern Railroad Corporation—Construction and Operation—in Campbell, Converse, Niobrara, and Weston Counties, WY, Custer, Fall River, Jackson, and Pennington Counties, SD, and Blue Earth, Nicollet, and Steele Counties, MN. We have shortened the title for the sake of simplicity.

FOR FURTHER INFORMATION CONTACT: Joseph H . Dettmar, (202) 565–1600. [TDD for the hearing impaired: (202) 565–1695.]

SUPPLEMENTARY INFORMATION: By decision served March 11, 1998, as corrected, the Board published notice of a construction and operation application filed by the Dakota, Minnesota & Eastern Railroad Corporation (DM&E)[2] and requested comments on a procedural schedule based on one proposed by DM&E for consideration of the transportation issues regarding the application.[3] That decision also required DM&E to cause to be published notices: (1) Advising that comments would not be due until the Board establishes a procedural schedule; and (2) after a schedule has been adopted by the Board, setting forth the schedule, including the due date for comments on the merits of the proposed transaction.

We received over two hundred comments on the proposed procedural schedule. Comments were filed by landowners, environmental groups, shipper organizations, shippers and receivers (including electric utilities), railroads, government entities, and rail labor unions. We have reviewed all of these comments but, in light of their number, will not mention each comment individually here.

For the most part, the parties opposing the proposed schedule state that the original 35-day comment period is insufficient. One group of similar letters[4] (over 50) asks that we allow comments throughout the EIS process. The other time period mentioned most frequently is an increase in the initial public comment period to 180 days. There are also a few suggestions for comment periods of up to 400 days.

The rationale for extending the time period for submitting comments is, generally, that the proposal is extensive and that more time is needed to study it and to seek help in asserting the parties' positions in opposition. These parties argue that copies of the application are not readily available to many landowners, and that the application set out on the Internet is incomplete.[5] These parties also claim that DM&E has had years to prepare its arguments and that they deserve time to counter these arguments and fully understand the public convenience and necessity claims of DM&E. There are also numerous requests for local hearings, contentions that consideration of the transportation criteria in 49 U.S.C. 10901 prior to completion of the analysis of the potential environmental impacts is not appropriate, and assertions that there is no public need for another rail line to serve the Powder River Basin.

There is one specific proposal for an alternative procedural schedule. It is offered by the 777 Ranch.[6] This proposal would significantly extend the due dates for the various pleadings[7] and ultimately postpone the issuance of a decision on transportation issues by slightly more than 9 months, for a total of approximately 15 months until the decision on the transportation issues is made.

Numerous parties support the 180 day schedule.[8] These parties emphasize that this schedule is reasonable and provides adequate time for submitting evidence and for informed decision making by the Board.

In support of the proposed schedule, DM&E argues that many of the opposing comments appear to be from parties ''implacably'' against the project who see delay as a desirable end in itself. DM&E also claims that many of the opposing comments are directed to environmental concerns, while others address the merits of the proposal rather than the amount of time needed to provide adequate opportunity for public participation and for development of a sufficient record on the transportation merits of the application. DM&E adds that it has attempted to ensure the broad availability of the application and that it went well beyond Board regulations in this regard.

Turning to the specific requests for lengthening the proposed schedule, DM&E notes that the commenters apparently did not take into account that, after the initial 35-day comment period, there would be a further 80-day period in which to submit transportation evidence and argument in opposition. In addition, DM&E points out that, even before a specific schedule is adopted, interested parties will have already had nearly 2 months since the application was filed to begin preparation of their transportation comments.

We have reviewed all the comments received on the proposed procedural schedule and are aware of the concerns parties have raised regarding the amount of time necessary to prepare their cases as well as the desire of DM&E to have an expedited schedule. Balancing these competing concerns, and with fairness to all parties in mind, we have decided to adopt the proposed 180-day procedural schedule for consideration of transportation issues. This schedule will ensure that all parties are accorded due process. It will allow for adequate public participation and the development of a sufficient record on which to consider the transportation implications of applicant's construction proposal under 49 U.S.C. 10901. As we explained in our previous decision, any approval granted would be conditioned upon consideration of the environmental impacts of the proposed construction. Thus, we will issue a subsequent decision after completion of the EIS process, and only at that point would we allow construction to begin, if appropriate, based on a consideration of the potential environmental impacts of the proposed transaction. The courts have found that it does not violate the environmental laws for an agency to conditionally approve an action before the completion of environmental review. *City of Grapevine* v. *DOT,* 17 F.3d 1502 (D.C. Cir. 1984). *See generally Missouri Mining Inc.* v. *ICC,* 33 F.3d 980 (8th Cir. 1994) (affirming construction authorization that had first been conditionally granted).

Although numerous parties have requested that we extend the various time periods set forth in the proposed schedule, none of these requests shows any specific need for additional time in order to address transportation issues under the statutory standards of section 10901. We believe the proposed schedule, which allows almost 4 months (a total of 115 days) in addition

[2] DM&E seeks authority to construct and operate 280.09 miles of new railroad line, which would extend DM&E's existing rail lines into the Powder River Basin coal fields in northeastern Wyoming, and DM&E also plans several related projects. Notice of the application was published in the **Federal Register** on March 13, 1998 (63 FR 12576).

[3] DM&E's proposed schedule also would have covered the carrying out of the environmental review process. Our March 11, 1998 decision found that it would be premature to establish any sort of environmental review schedule, but directed our Section of Environmental Analysis (SEA) to initiate the environmental review process. On March 27, 1998, SEA published a notice of intent to prepare an Environmental Impact Statement (EIS), scheduling agency and public scoping meetings between April 29 and June 30, 1998.

[4] The second largest group of similar letters (over 30) does not specifically address the procedural schedule; rather, these letters argue against conditional approval.

[5] DM&E placed a copy of the application on the Internet at ''WWW.DMERAIL.COM.''

[6] The 777 Ranch and the Mid-States Coalition for Progress list the same PO box and phone number, and their pleadings are quite similar. The SMS Ranch Partnership also submitted essentially identical comments.

[7] The 777 Ranch would make these changes to the proposed schedule (where P signifies the date of this decision): comments due from P + 35 to P + 180; STB decision setting modified procedure/oral hearing from P + 70 to P + 215; opposing evidence and argument from P + 115 to P + 395; and STB decision from P + 180 to P + 460.

[8] These parties also frequently mention their support for the construction project and request expedited consideration of the environmental issues.

to the time already elapsed since the application was filed, affords ample opportunity to file evidence and argument in opposition to the application.

In addition, we note that many of the pleadings we received in response to our request for comments on the procedural schedule for consideration of transportation issues instead raise concerns with environmental issues. As noted, we will separately address environmental issues in a subsequent decision after completion of the EIS process. Other comments are directed more to the transportation merits of the application than the procedural schedule.

As mentioned, our previous decision required DM&E to cause to be published new notices setting forth the schedule we are adopting here and certifying to us that it has done so. We are reiterating that requirement here.

In addition to setting forth the procedural schedule, the new notices must clearly set forth the filing requirements we established here, which we are modifying slightly from those originally contemplated. These filing requirements are: first, anyone who intends to file comments in this proceeding and to participate fully as a party of record (POR) must file with the Secretary of the Board an original and 10 copies of a notice of intent to participate in the proceeding by May 27, 1998. The Board will then issue a list of those persons who have given notice of their intent to participate.[9] All documents (including comments) filed under the procedural schedule must be served on each person identified on this service list as a POR and each person making a filing must certify to the Secretary of the Board that he or she has done so. Persons not participating as a POR may obtain copies of pleadings through the Board's copy contractor, DC News & Data, Inc., 1925 K Street, N.W., Suite 210, Washington, DC 20006. Telephone: (202) 289–4357. [Assistance for the hearing impaired is available through TDD Services (202) 565–1695.] Second, so that all PORs may have the benefit of receiving all comments, we are requiring that, in order to be considered, any previously submitted comments addressing the transportation merits of the proposed construction must be resubmitted and properly served on all PORs once we issue the service list. Previously submitted transportation comments will not be considered unless resubmitted and served. We recognize that this will create duplicate pleadings in some circumstances, but feel it is necessary to ensure complete dissemination of all comments.[10]

Board decisions and notices are available on our website at ''WWW.STB.DOT.GOV.''

This action will not significantly affect either the quality of the human environment or the conservation of energy resources.

Decided: April 30, 1998.

By the Board, Chairman Morgan and Vice Chairman Owen.

Vernon A. Williams,

Secretary.

Procedural Schedule

In the following schedule, the term ''P'' designates the date that the Board issues this procedural schedule and ''P + n'' means ''n'' days following that date.

P—Procedural schedule established by the Board.

P+7—Due date for publication by DM&E of newspaper notice announcing the procedural schedule.

P+20—Due date for notices of intent to participate as a party of record

P+35—Due date for written comments on transportation aspects of the Application.

P+40—Due date for DM&E's replies to written comments on transportation aspects of the Application.

P+70—Board decision ordering hearing under modified procedures.

P+115—Due date for evidence and argument in opposition to the transportation aspects of the Application.

P+135—Due date for DM&E's reply evidence and argument in support of the transportation aspects of the Application.

P+180 (or earlier)—Service of preliminary decision on whether the transportation criteria of section 10901 have been met.

[FR Doc. 98–12165 Filed 5–6–98; 8:45 am]

BILLING CODE 4915–00–P

[9] The Office of the Secretary will start compiling the official service list in this proceeding after service of this decision adopting a procedural schedule. Persons named on any earlier service list will not automatically be placed on the official service list for this proceeding. Therefore, any person who wishes to be a POR must file a notice of intent to participate by May 27, 1998.

[10] We emphasize that interested persons that do not wish to participate formally in this phase of the proceeding addressing the transportation merits of the application need not become a POR to participate fully in the environmental phase of the proceeding. We note that cross service of comments is not ordinarily required in the environmental review process.

DEPARTMENT OF THE TREASURY

Customs Service

[T.D. 98–36]

Customs Accreditation of Herguth Laboratories, Inc. as an Accredited Laboratory

AGENCY: Customs Service, Department of the Treasury

ACTION: Notice of accreditation of Herguth Laboratories, Inc. as a commercial accredited laboratory.

SUMMARY: Herguth Laboratories, Inc., of Vallejo, California, has applied to U.S. Customs for an extension of accreditation to perform petroleum analysis methods under § 151.13 of the Customs Regulations (19 CFR 151.13) to their Vallejo, California facility. Customs has determined that Herguth Laboratories, Inc. meets all of the requirements for accreditation as a Commercial Laboratory to perform (1) API Gravity, (2) Sediment, (3) Distillation, (4) Reid Vapor Pressure (5) Saybolt Universal Viscosity, (6) Sediment by Extraction, (7) Percent by Weight of Sulfur and (8) Percent by Weight of Lead. Therefore, in accordance with § 151.13(f) of the Customs Regulations, Herguth Laboratories, Inc., is granted accreditation to perform the analysis methods listed above.

LOCATION: Herguth Laboratories, Inc. accredited site is located at: 101 Corporate Place, Vallejo, California 94590–6968

EFFECTIVE DATE: April 24, 1998.

FOR FURTHER INFORMATION CONTACT: Michael J. Parker, Science Officer, Laboratories and Scientific Services, U.S. Customs Service, 1300 Pennsylvania Avenue, NW, Room 5.5–B, Washington, DC 20229 at (202) 927–1060.

Dated: April 27, 1998.

George D. Heavey,

Director, Laboratories and Scientific Services.

[FR Doc. 98–12090 Filed 5–6–98; 8:45 am]

BILLING CODE 4820–02–P

DEPARTMENT OF THE TREASURY

Internal Revenue Service

Proposed Collection; Comment Request for Notice 88–30 and Notice 88–132

AGENCY: Internal Revenue Service (IRS), Treasury.

ACTION: Notice and request for comments.

SUMMARY: The Department of the Treasury, as part of its continuing effort to reduce paperwork and respondent burden, invites the general public and other Federal agencies to take this opportunity to comment on proposed and/or continuing information collections, as required by the Paperwork Reduction Act of 1995, Public Law 104–13 (44 U.S.C. 3506(c)(2)(A)). Currently, the IRS is soliciting comments concerning two existing notices, Notice 88–30, Diesel Fuel and Aviation Fuel Imposed at Wholesale Level, and Notice 88–132, Diesel and Aviation Fuel Taxes; Rules Effective 1/1/89.

DATES: Written comments should be received on or before July 6, 1998, to be assured of consideration.

ADDRESSES: Direct all written comments to Garrick R. Shear, Internal Revenue Service, room 5571, 1111 Constitution Avenue NW., Washington, DC 20224.

FOR FURTHER INFORMATION CONTACT: Requests for additional information or copies of the notices should be directed to Carol Savage, (202) 622–3945, Internal Revenue Service, room 5569, 1111 Constitution Avenue NW., Washington, DC 20224.

SUPPLEMENTARY INFORMATION:

Title: Notice 88–30, Diesel Fuel and Aviation Fuel Imposed at Wholesale Level; Notice 88–132, Diesel and Aviation Fuel Taxes; Rules Effective 1/1/89.

OMB Number: 1545–1043.

Notice Number: Notice 88–30 and Notice 88–132.

Abstract: Notice 88–30 and Notice 88–132 require certain persons involved with diesel or aviation fuel (1) to be registered with the Internal Revenue Service, (2) to maintain certain records, and (3) to provide certificates to support exempt purchases. Because of the Code amendments made by the Omnibus Budget Reconciliation Act of 1993, these requirements now apply only with respect to aviation fuel.

Current Actions: There are no changes being made to the notices at this time.

Type of Review: Extension of a currently approved collection.

Affected Public: Business or other for-profit organizations, not-for-profit institutions, farms, and state, local or tribal governments.

Estimated Number of Respondents: 3,500.

Estimated Time Per Respondent: 1 hour, 6 minutes.

Estimated Total Annual Burden Hours: 3,850.

The following paragraph applies to all of the collections of information covered by this notice:

An agency may not conduct or sponsor, and a person is not required to respond to, a collection of information unless the collection of information displays a valid OMB control number. Books or records relating to a collection of information must be retained as long as their contents may become material in the administration of any internal revenue law. Generally, tax returns and tax return information are confidential, as required by 26 U.S.C. 6103.

REQUEST FOR COMMENTS: Comments submitted in response to this notice will be summarized and/or included in the request for OMB approval. All comments will become a matter of public record. Comments are invited on: (a) Whether the collection of information is necessary for the proper performance of the functions of the agency, including whether the information shall have practical utility; (b) the accuracy of the agency's estimate of the burden of the collection of information; (c) ways to enhance the quality, utility, and clarity of the information to be collected; (d) ways to minimize the burden of the collection of information on respondents, including through the use of automated collection techniques or other forms of information technology; and (e) estimates of capital or start-up costs and costs of operation, maintenance, and purchase of services to provide information.

Approved: May 1, 1998.

Garrick R. Shear,

IRS Reports Clearance Officer.

[FR Doc. 98–12189 Filed 5–6–98; 8:45 am]

BILLING CODE 4830–01–U

DEPARTMENT OF THE TREASURY

Internal Revenue Service

[INTL–45–86]

Proposed Collection; Comment Request for Regulation Project

AGENCY: Internal Revenue Service (IRS), Treasury.

ACTION: Notice and request for comments.

SUMMARY: The Department of the Treasury, as part of its continuing effort to reduce paperwork and respondent burden, invites the general public and other Federal agencies to take this opportunity to comment on proposed and/or continuing information collections, as required by the Paperwork Reduction Act of 1995, Public Law 104–13 (44 U.S.C. 3506(c)(2)(A)). Currently, the IRS is soliciting comments concerning an existing final regulation, INTL–45–86 (TD 8125), Foreign Management and Foreign Economic Processes Requirements of a Foreign Sales Corporation (§ 1.924).

DATES: Written comments should be received on or before July 6, 1998, to be assured of consideration.

ADDRESSES: Direct all written comments to Garrick R. Shear, Internal Revenue Service, room 5571, 1111 Constitution Avenue NW., Washington, DC 20224.

FOR FURTHER INFORMATION CONTACT: Requests for additional information or copies of the regulation should be directed to Carol Savage, (202) 622–3945, Internal Revenue Service, room 5569, 1111 Constitution Avenue NW., Washington, DC 20224.

SUPPLEMENTARY INFORMATION:

Title: Foreign Management and Foreign Economic Processes Requirements of Foreign Sales Corporation.

OMB Number: 1545–0904.

Regulation Project Number: INTL–45–86.

Abstract: This regulation provides rules for complying with foreign management and foreign economic process requirements to enable foreign sales corporations to produce foreign trading gross receipts and qualify for reduced tax rates. Section 1.924(d)–1(b)(2) of the regulation requires that records must be kept to verify that the necessary activities were actually performed outside the United States.

Current Actions: There is no change to this existing regulation.

Type of Review: Extension of a currently approved collection.

Affected Public: Business or other for-profit organizations.

Estimated Number of Recordkeepers: 11,001.

Estimated Time Per Recordkeeper: 2 hours.

Estimated Total Recordkeeping: 22,001.

The following paragraph applies to all of the collections of information covered by this notice:

An agency may not conduct or sponsor, and a person is not required to respond to, a collection of information unless the collection of information displays a valid OMB control number. Books or records relating to a collection of information must be retained as long as their contents may become material in the administration of any internal revenue law. Generally, tax returns and tax return information are confidential, as required by 26 U.S.C. 6103.

REQUEST FOR COMMENTS: Comments submitted in response to this notice will be summarized and/or included in the

request for OMB approval. All comments will become a matter of public record. Comments are invited on: (a) Whether the collection of information is necessary for the proper performance of the functions of the agency, including whether the information shall have practical utility; (b) the accuracy of the agency's estimate of the burden of the collection of information; (c) ways to enhance the quality, utility, and clarity of the information to be collected; (d) ways to minimize the burden of the collection of information on respondents, including through the use of automated collection techniques or other forms of information technology; and (e) estimates of capital or start-up costs and costs of operation, maintenance, and purchase of services to provide information.

Approved: May 1, 1998.

Garrick R. Shear,

IRS Reports Clearance Officer.

[FR Doc. 98–12190 Filed 5–6–98; 8:45 am]

BILLING CODE 4830–01–U

UNITED STATES INFORMATION AGENCY

Culturally Significant Objects Imported for Exhibition

Determinations

Notice is hereby given of the following determinations: Pursuant to the authority vested in me by the Act of October 19, 1965 (79 Stat. 985, 22 U.S.C. 2459), Executive Order 12047 of March 27, 1978 (43 FR 13359, March 29, 1978), and Delegation Order No. 85–5 of June 27, 1985 (50 FR 27393, July 2, 1985), I hereby determine that the objects to be included in the exhibit, ''Queens and Commoners of Egypt's New Kingdom'' (See list [1]), imported from abroad for the temporary exhibition without profit within the United States, are of cultural significance. These objects are imported pursuant to a loan agreement with the foreign lenders. I also determine that the exhibition or display of the listed exhibit objects at The Charleston Museum, Charleston, South Carolina from on or about October 1, 1998, through June 30, 1999, is in the national interest. Public Notice of these determinations is ordered to be published in the **Federal Register**.

Dated: April 29, 1998.

Les Jin,

General Counsel.

[FR Doc. 98–12086 Filed 5–6–98; 8:45 am]

BILLING CODE 8230–01–M

[1] A copy of this list may be obtained by contacting Ms. Carol Epstein, Assistant General Counsel, at 202/619–6981, and the address is Room 700, U.S. Information Agency, 301 Fourth Street, SW., Washington, D.C. 20547–001.

federal register

Thursday
May 7, 1998

Part II

Department of Health and Human Services

Health Care Financing Administration

45 CFR Part 142

Health Insurance Reform: Standards for Electronic Transactions; National Standard Health Care Provider Identifier; Proposed Rules

DEPARTMENT OF HEALTH AND HUMAN SERVICES

Office of the Secretary

45 CFR Part 142

[HCFA–0149–P]

RIN 0938–AI58

Health Insurance Reform: Standards for Electronic Transactions

AGENCY: Health Care Financing Administration (HCFA), HHS.

ACTION: Proposed rule.

SUMMARY: This rule proposes standards for eight electronic transactions and for code sets to be used in those transactions. It also proposes requirements concerning the use of these standards by health plans, health care clearinghouses, and health care providers.

The use of these standard transactions and code sets would improve the Medicare and Medicaid programs and other Federal health programs and private health programs, and the effectiveness and efficiency of the health care industry in general, by simplifying the administration of the system and enabling the efficient electronic transmission of certain health information. It would implement some of the requirements of Administrative Simplification subtitle of the Health Insurance Portability and Accountability Act of 1996.

DATES: Comments will be considered if we receive them at the appropriate address, as provided below, no later than 5 p.m. on July 6, 1998.

ADDRESSES: Mail written comments (1 original and 3 copies) to the following address:

Health Care Financing Administration, U.S. Department of Health and Human Services, Attention: HCFA–0149–P, P.O. Box 31850, Baltimore, MD 21207–8850.

If you prefer, you may deliver your written comments (1 original and 3 copies) to one of the following addresses:

Room 309–G, Hubert H. Humphrey Building, 200 Independence Avenue, SW., Washington, DC 20201,

or

Room C5–09–26, 7500 Security Boulevard, Baltimore, MD 21244–1850.

Comments may also be submitted electronically to the following e-mail address: transact@osaspe.dhhs.gov. E-mail comments should include the full name and address of the sender and must be submitted to the referenced address to be considered. All comments should be incorporated in the e-mail message because we may not be able to access attachments. Electronically submitted comments will be available for public inspection at the Independence Avenue address below.

Because of staffing and resource limitations, we cannot accept comments by facsimile (FAX) transmission. In commenting, please refer to file code HCFA–0149–P and the specific section of this proposed rule. Comments received timely will be available for public inspection as they are received, generally beginning approximately 3 weeks after publication of a document, in Room 309–G of the Department's offices at 200 Independence Avenue, SW., Washington, DC, on Monday through Friday of each week from 8:30 a.m. to 5 p.m. (phone: (202) 690–7890). Electronic and legible written comments will also be posted, along with this proposed rule, at the following web site: http://aspe.os.dhhs.gov/admnsimp.

Copies: To order copies of the **Federal Register** containing this document, send your request to: New Orders, Superintendent of Documents, P.O. Box 371954, Pittsburgh, PA 15250–7954. Specify the date of the issue requested and enclose a check or money order payable to the Superintendent of Documents, or enclose your Visa or Master Card number and expiration date. Credit card orders can also be placed by calling the order desk at (202) 512–1800 or by faxing to (202) 512–2250. The cost for each copy is $8. As an alternative, you can view and photocopy the **Federal Register** document at most libraries designated as Federal Depository Libraries and at many other public and academic libraries throughout the country that receive the **Federal Register**.

This **Federal Register** document is also available from the **Federal Register** online database through GPO Access, a service of the U.S. Government Printing Office. Free public access is available on a Wide Area Information Server (WAIS) through the Internet and via asynchronous dial-in. Internet users can access the database by using the World Wide Web; the Superintendent of Documents home page address is http://www.access.gpo.gov/su__docs/, by using local WAIS client software, or by telnet to swais.access.gpo.gov, then login as guest (no password required). Dial-in users should use communications software and modem to call 202–512–1661; type swais, then login as guest (no password required).

FOR FURTHER INFORMATION CONTACT:

Pat Brooks, (410) 786–5318, for medical diagnosis, procedure, and clinical code sets.

Joy Glass, (410) 786–6125, for the following transactions: Health claims or equivalent encounter information; health care payment and remittance advice; coordination of benefits; and health care claim status.

Marilyn Abramovitz, (410) 786–5939, for the following transactions: Enrollment and disenrollment in a health plan; eligibility for a health plan; health plan premium payments; and referral certification and authorization.

SUPPLEMENTARY INFORMATION:

I. Background

[Please label written or e-mailed comments about this section with the subject: Background]

Electronic data interchange (EDI) is the electronic transfer of information, such as electronic media health care claims, in a standard format between trading partners. EDI allows entities within the health care system to exchange medical, billing, and other information and process transactions in a manner which is fast and cost effective. With EDI there is a substantial reduction in handling and process time, and the risk of lost paper documents is eliminated. EDI can eliminate the inefficiencies of handling paper documents, which will significantly reduce the administrative burden, lower operating costs and improve overall data quality.

The health care industry recognizes the benefits of EDI and many entities in that industry have developed proprietary EDI formats. Currently, there are about 400 formats for electronic health care claims being used in the United States. The lack of standardization makes it difficult to develop software, and the efficiencies and savings for health care providers and health plans that could be realized if formats were standardized are diminished.

Adopting national standard EDI formats for health care transactions would greatly decrease the burden on health care providers and their billing services, as would standardized data content. Standard EDI format allows data interchange using a common interchange structure, thus eliminating the need for users to reprogram their data processing systems for multiple formats. Standardization of the data content within the interchange structure involves: (1) Uniform definitions of the data elements that will be exchanged in each type of electronic transaction, and

(2) for some data elements, identification of the specific codes or values that are valid for each data element. The code sets needed for EDI in the health care industry include large coding and classification systems for medical diagnoses, procedures, and drugs, as well as smaller sets of codes for such items as types of facility, types of currency, types of units, and specified State within the United States. Standardized data content is essential to accurate and efficient EDI between the many producers and users of administrative health data transactions.

A. Legislation

The Congress included provisions to address the need for electronic transactions and other administrative simplification issues in the Health Insurance Portability and Accountability Act of 1996 (HIPAA), Public Law 104–191, which was enacted on August 21, 1996. Through subtitle F of title II of that law, the Congress added to title XI of the Social Security Act a new part C, entitled ''Administrative Simplification.'' (Public Law 104–191 affects several titles in the United States Code. Hereafter, we refer to the Social Security Act as the Act; we refer to the other laws cited in this document by their names.) The purpose of this part is to improve the Medicare and Medicaid programs in particular and the efficiency and effectiveness of the health care system in general by encouraging the development of a health information system through the establishment of standards and requirements to facilitate the electronic transmission of certain health information.

Part C of title XI consists of sections 1171 through 1179 of the Act. These sections define various terms and impose several requirements on HHS, health plans, health care clearinghouses, and certain health care providers concerning the electronic transmission of health information.

The first section, section 1171 of the Act, establishes definitions for purposes of part C of title XI for the following terms: code set, health care clearinghouse, health care provider, health information, health plan, individually identifiable health information, standard, and standard setting organization.

Section 1172 of the Act makes any standard adopted under part C applicable to (1) all health plans, (2) all health care clearinghouses, and (3) any health care providers that transmit any health information in electronic form in connection with transactions referred to in section 1173(a)(1) of the Act.

This section also contains requirements concerning standard setting.

- The Secretary may adopt a standard developed, adopted, or modified by a standard setting organization (that is, an organization accredited by the American National Standards Institute (ANSI)) that has consulted with the National Uniform Billing Committee (NUBC), the National Uniform Claim Committee (NUCC), the Workgroup for Electronic Data Interchange (WEDI), and the American Dental Association (ADA).
- The Secretary may also adopt a standard other than one established by a standard setting organization, if the different standard will reduce costs for health care providers and health plans, the different standard is promulgated through negotiated rulemaking procedures, and the Secretary consults with each of the above-named groups.
- If no standard has been adopted by any standard setting organization, the Secretary is to rely on the recommendations of the National Committee on Vital and Health Statistics (NCVHS) and consult with the above-named groups.

In complying with the requirements of part C of title XI, the Secretary must rely on the recommendations of the NCVHS, consult with appropriate State, Federal, and private agencies or organizations, and publish the recommendations of the NCVHS in the **Federal Register**.

Paragraph (a) of section 1173 of the Act requires that the Secretary adopt standards for financial and administrative transactions, and data elements for those transactions, to enable health information to be exchanged electronically. Standards are required for the following transactions: health claims, health encounter information, health claims attachments, health plan enrollments and disenrollments, health plan eligibility, health care payment and remittance advice, health plan premium payments, first report of injury, health claim status, and referral certification and authorization. In addition, the Secretary is required to adopt standards for any other financial and administrative transactions that are determined to be appropriate by the Secretary.

Paragraph (b) of section 1173 of the Act requires the Secretary to adopt standards for unique health identifiers for all individuals, employers, health plans, and health care providers and requires further that the adopted standards specify for what purposes unique health identifiers may be used.

Paragraphs (c) through (f) of section 1173 of the Act require the Secretary to establish standards for code sets for each data element for each health care transaction listed above, security standards for health care information systems, standards for electronic signatures (established together with the Secretary of Commerce), and standards for the transmission of data elements needed for the coordination of benefits and sequential processing of claims. Compliance with electronic signature standards will be deemed to satisfy both State and Federal requirements for written signatures with respect to the transactions listed in paragraph (a) of section 1173 of the Act.

In section 1174 of the Act, the Secretary is required to adopt standards for all of the above transactions, except claims attachments, within 24 months after enactment. The standards for claims attachments must be adopted within 30 months after enactment. Generally, after a standard is established it cannot be changed during the first year except for changes that are necessary to permit compliance with the standard. Modifications to any of these standards may be made after the first year, but not more frequently than once every 12 months. The Secretary must also ensure that procedures exist for the routine maintenance, testing, enhancement, and expansion of code sets and that there are crosswalks from prior versions.

Section 1175 of the Act prohibits health plans from refusing to process or delaying the processing of a transaction that is presented in standard format. The Act's requirements are not limited to health plans, however; instead, each person to whom a standard or implementation specification applies is required to comply with the standard within 24 months (or 36 months for small health plans) of its adoption. A plan or person may, of course, comply voluntarily before the effective date. A person may comply by using a health care clearinghouse to transmit or receive the standard transactions. Compliance with modifications to standards or implementation specifications must be accomplished by a date designated by the Secretary. This date may not be earlier than 180 days after the notice of change.

Section 1176 of the Act establishes a civil monetary penalty for violation of the provisions in part C of title XI of the Act, subject to several limitations. Penalties may not be more than $100 per person per violation and not more than $25,000 per person per violation of a single standard for a calendar year. The procedural provisions in section 1128A of the Act, ''Civil Monetary Penalties,'' are applicable.

Section 1177 of the Act establishes penalties for a knowing misuse of unique health identifiers and individually identifiable health information: (1) A fine of not more than $50,000 and/or imprisonment of not more than 1 year; (2) if misuse is ''under false pretenses,'' a fine of not more than $100,000 and/or imprisonment of not more than 5 years; and (3) if misuse is with intent to sell, transfer, or use individually identifiable health information for commercial advantage, personal gain, or malicious harm, a fine of not more than $250,000 and/or imprisonment of not more than 10 years.

Under section 1178 of the Act, the provisions of part C of title XI of the Act, as well as any standards established under them, supersede any State law that is contrary to them. However, the Secretary may, for statutorily specified reasons, waive this provision.

Finally, section 1179 of the Act makes the above provisions inapplicable to financial institutions or anyone acting on behalf of a financial institution when ''authorizing, processing, clearing, settling, billing, transferring, reconciling, or collecting payments for a financial institution''.

(Concerning this last provision, the conference report, in its discussion on section 1178, states:

''The conferees do not intend to exclude the activities of financial institutions or their contractors from compliance with the standards adopted under this part if such activities would be subject to this part. However, conferees intend that this part does not apply to use or disclosure of information when an individual utilizes a payment system to make a payment for, or related to, health plan premiums or health care. For example, the exchange of information between participants in a credit card system in connection with processing a credit card payment for health care would not be covered by this part. Similarly sending a checking account statement to an account holder who uses a credit or debit card to pay for health care services, would not be covered by this part. However, this part does apply if a company clears health care claims, the health care claims activities remain subject to the requirements of this part.'')

(H.R. Rep. No. 736, 104th Cong., 2nd Sess. 268–269 (1996))

B. Process for Developing National Standards

The Secretary has formulated a 5-part strategy for developing and implementing the standards mandated under part C of title XI of the Act:

1. To ensure necessary interagency coordination and required interaction with other Federal departments and the private sector, establish interdepartmental implementation teams to identify and assess potential standards for adoption. The subject matter of the teams includes claims/encounters, identifiers, enrollment/eligibility, systems security, and medical coding/classification. Another team addresses cross-cutting issues and coordinates the subject matter teams. The teams consult with external groups such as the NCVHS'' Workgroup on Data Standards, WEDI, ANSI's Healthcare Informatics Standards Board (HISB), the NUCC, the NUBC, and the ADA. The teams are charged with developing regulations and other necessary documents and making recommendations for the various standards to the HHS'' Data Council through its Committee on Health Data Standards. (The HHS Data Council is the focal point for consideration of data policy issues. It reports directly to the Secretary and advises the Secretary on data standards and privacy issues.)

2. Develop recommendations for standards to be adopted.

3. Publish proposed rules in the **Federal Register** describing the standards. Each proposed rule provides the public with a 60-day comment period.

4. Analyze public comments and publish the final rules in the **Federal Register**.

5. Distribute standards and coordinate preparation and distribution of implementation guides.

This strategy affords many opportunities for involvement of interested and affected parties in standards development and adoption by enabling them to:

- Participate with standards setting organizations.
- Provide written input to the NCVHS.
- Provide written input to the Secretary of the HHS.
- Provide testimony at NCVHS' public meetings.
- Comment on the proposed rules for each of the proposed standards.
- Invite HHS staff to meetings with public and private sector organizations or meet directly with senior HHS staff involved in the implementation process.

The implementation teams charged with reviewing standards for designation as required national standards under the statute have defined, with significant input from the health care industry, a set of principles for guiding choices for the standards to be adopted by the Secretary. These principles are based on direct specifications in HIPAA and the purpose of the law, principles that support the regulatory philosophy set forth in Executive Order 12866 and the Paperwork Reduction Act of 1995. To be designated as an HIPAA standard, each standard should:

1. Improve the efficiency and effectiveness of the health care system by leading to cost reductions for or improvements in benefits from electronic health care transactions.

2. Meet the needs of the health data standards user community, particularly health care providers, health plans, and health care clearinghouses.

3. Be consistent and uniform with the other HIPAA standards—their data element definitions and codes and their privacy and security requirements—and, secondarily, with other private and public sector health data standards.

4. Have low additional development and implementation costs relative to the benefits of using the standard.

5. Be supported by an ANSI-accredited standards developing organization or other private or public organization that will ensure continuity and efficient updating of the standard over time.

6. Have timely development, testing, implementation, and updating procedures to achieve administrative simplification benefits faster.

7. Be technologically independent of the computer platforms and transmission protocols used in electronic health transactions, except when they are explicitly part of the standard.

8. Be precise and unambiguous, but as simple as possible.

9. Keep data collection and paperwork burdens on users as low as is feasible.

10. Incorporate flexibility to adapt more easily to changes in the health care infrastructure (such as new services, organizations, and provider types) and information technology.

A master data dictionary providing for common data definitions across the standards selected for implementation under HIPAA will be developed and maintained. We intend for the data element definitions to be precise, unambiguous, and consistently applied. The transaction-specific reports and general reports from the master data dictionary will be readily available to the public. At a minimum, the information presented will include data element names, definitions, and appropriate references to the transactions where they are used.

C. ANSI-Accredited Standards Committee Standard Setting Process

ANSI chartered the X12 Accredited Standards Committee (ASC) a number of years ago to design national electronic

standards for a wide range of business applications. A separate ASC X12N Subcommittee was in turn chartered to develop electronic standards specific to the insurance industry, including health care insurance. Volunteer members of the ASC X12N Subcommittee, including health care providers, health plans, bankers, and vendors involved in software development/billing/transmission of health care data and other business aspects of health care administrative activities, worked to develop standards for electronic health care transactions. ANSI accredits standards setting organizations to ensure that the procedures used meet certain due process requirements and that the process is voluntary, open, and based on obtaining consensus. Both Accredited Standards Committee (ASC) X12 and the National Council for Prescription Drug Programs (NCPDP) are ANSI-accredited standards developers.

Each of the two standards setting organizations has written procedures for the establishment of, and revisions to, established standards. All of the X12 Subcommittee N: Insurance (to which we refer hereafter as X12N) standard implementations mentioned in this regulation are ASC X12 standards and are published under the designation ''Draft Standard for Trial Use (DSTU)''. These standards are fully accepted and published national standards for use in electronic data exchanges. The DSTU designation is used to distinguish ASC X12 standards from those standards that have been forwarded to the American National Standards Institute for acceptance as American National Standards. ASC X12 creates a family of standards that are related and therefore only forwards standards to ANSI every five years. Although the official designation of X12 standards includes the word ''Draft'', these standards are final, published national standards.

The ASC X12 development process involves negotiation and consensus building, resulting in approval and publication of DSTU and American National Standards. The ASC X12 committee maintains current standards, proposes new standards and embraces new ideas.

The ASC X12N Subcommittee is the decision-making body responsible for obtaining consensus, which is necessary for approval of American National Standards in the field of insurance. The ASC X12N Subcommittee has the responsibility for specific standards development and standards maintenance activities, but its work must be ratified by the membership of ASC X12 as a whole.

Members of the ASC X12 committee are eligible to vote on ASC X12N issues. ASC X12N votes technical issues by letter ballot. Administrative issues may be voted by letter ballot or at general sessions during ASC X12N meetings.

The NCPDP Telecommunication Standard 3.2 specifies the rules regarding the creation of a new version and release. The NCPDP standards development process involves additions of new data elements or additional values to existing data elements. Updated documentation of existing or new data elements and a new version is created with changes to: (1) The definition of an existing data element, (2) deletions of values of an existing data element, (3) deletions of existing data elements, (4) major structural changes to the formats, (5) changes in the size of data elements, or (6) changes in the formats of data elements.

These rules were confirmed by the Board of Trustees in June, 1995 and ensure that the health plan explicitly knows which Data Dictionary to apply to the transaction when processing the claim. Likewise, the pharmacy needs to know what are the acceptable fields in the response returned from the health plan.

In addition, the Telecommunication Standard Format Version/Release changes anytime there is an approved change to the Professional Pharmacy Services (PPS) standard, Drug Utilization Review (DUR) standard, Billing Unit standard or to the data elements for the claim itself.

All NCPDP implementation guides must be reviewed and approved by the Maintenance and Control Work Group prior to release to the membership. All proposed standards will have an implementation guide developed and approved prior to the proposed standard being balloted. Once balloted, the originating committee may work with individual disapproval votes to accommodate their concerns and convert their votes to approval. If the changes made to accommodate disapproval votes are considered substantial, then the item under consideration must be balloted again.

After the originating group has reviewed all comments received during the letter ballot period, the Co-Chairs of the originating group make a written request to the Board of Trustees for the ballot results collected from the Standardization Co-chairs and the Board of Directors. The Board of Trustees retains final authority over the certification of these ballot results.

Two types of code sets are required for data elements in ASC X12N and NCPDP health transaction standards: (1) Large coding and classification systems for medical data elements (for example, diagnoses, procedures, and drugs), and (2) smaller sets of codes for data elements such as type of facility, type of units, and specified State within address fields. Federal agencies (NCHS, HCFA, FDA) and some private organizations (the AMA and the ADA) have developed and maintained standards for large medical data code sets. In the past, these code sets have been mandated for use in some Federal and State programs, such as Medicare and Medicaid, and the ASC X12N and NCPDP standards setting organizations have adopted these code sets for use in their standards. For the smaller sets of codes needed for various transaction data elements they have designated other *de facto* standards, such as the 2-character state abbreviations used by the U.S. Postal Service, or developed code sets specifically for their transaction standards.

This proposed rule would establish the standards for code sets to be used in seven of the transactions specified in section 1173(a)(2) of the Act, and for a transaction for coordination of benefits. We anticipate publishing several regulations documents altogether to promulgate the various standards required under the HIPAA. The other proposed regulations cover security standards, the seventh and ninth transactions specified in the Act (first report of injury and claims attachments), and the four identifiers.

II. Provisions of the Proposed Regulations

[Please label written comments or e-mailed comments about this section with the subject: Provisions]

In this proposed rule, we propose standards for eight transactions and for code sets to be used in the transactions. We also propose requirements concerning the implementation of these standards. This proposed rule would set forth requirements that health plans, health care clearinghouses, and certain health care providers would have to meet concerning the use of these standards.

We propose to add a new part to title 45 of the Code of Federal Regulations for health plans, health care providers, and health care clearinghouses in general. The new part would be part 142 of title 45 and would be titled ''Administrative Requirements.'' Subparts J through R would contain the provisions specifically concerning the standards proposed in this rule.

A. Applicability

Section 262 of HIPAA applies to all health plans, all health care clearinghouses, and any health care providers that transmit any health information in electronic form in connection with transactions referred to in section 1173(a)(1) of the Act. Our proposed rules (at 45 CFR 142.102) would apply to the health plans and health care clearinghouses as well, but we would clarify the statutory language in our regulations for health care providers: we would have the regulations apply to any health care provider only when electronically transmitting any of the transactions to which section 1173(a)(1) of the Act refers.

Electronic transmissions would include transmissions using all media, even when the transmission is physically moved from one location to another using magnetic tape, disk, or CD media. Transmissions over the Internet (wide-open), Extranet (using Internet technology to link a business with information only accessible to collaborating parties), leased lines, dial-up lines, and private networks are all included. Telephone voice response and ''faxback'' systems would not be included.

Our regulations would apply to health care clearinghouses when transmitting transactions to, and receiving transactions from, any health care provider or health plan that transmits and receives standard transactions (as defined under ''transaction'') and at all times when transmitting to or receiving transactions from another health care clearinghouse.

Entities that offer on-line interactive transmission must comply with the standards. The HyperText Markup Language (HTML) interaction between a server and a browser by which the data elements of a transaction are solicited from a user would not have to use the standards, although the data content must be equal to that required for the standard. Once the data elements are assembled into a transaction by the server, the transmitted transaction would have to comply with the standards.

The law would apply to each health care provider when transmitting or receiving any of the specified electronic transactions. Transactions for certain services that are not normally considered health care services, but which may be covered by some health plans, would not be subject to the standards proposed in this rule. These services would include, but not be limited to: nonemergency transportation, physical alterations to living quarters for the purpose of accommodating disabilities, and case management. Other services may be added to this list at the discretion of the Secretary.

We invite comments on this list and ask for identification of other types of services that may fall into this category. We will publish a complete list of these services and a process to request an exemption in the final rule.

The law applies to health plans for all transactions.

Section 142.104 would contain the following provisions (from section 1175 of the Act):

If a person conducts a transaction (as defined in § 142.103) with a health plan as a standard transaction, the following apply:

(1) The health plan may not refuse to conduct the transaction as a standard transaction.

(2) The health plan may not delay the transaction or otherwise adversely affect, or attempt to adversely affect, the person or the transaction on the ground that the transaction is a standard transaction.

(3) The information transmitted and received in connection with the transaction must be in the form of standard data elements of health information.

As a further requirement, we would provide that a health plan that conducts transactions through an agent assure that the agent meets all the requirements of part 142 that apply to the health plan.

Section 142.105 would state that a person or other entity may meet the requirements of § 142.104 by either—

(1) Transmitting and receiving standard data elements, or

(2) Submitting nonstandard data elements to a health care clearinghouse for processing into standard data elements and transmission by the health care clearinghouse and receiving standard data elements through the health care clearinghouse.

Health care clearinghouses would be able to accept nonstandard transactions for the sole purpose of translating them into standard transactions for sending customers and would be able to accept standard transactions and translate them into nonstandard formats for receiving customers. We would state in § 142.105 that the transmission of nonstandard transactions, under contract, between a health plan or a health care provider and a health care clearinghouse would not violate the law.

Transmissions within a corporate entity would not be required to comply with the standards. A hospital that is wholly owned by a managed care company would not have to use the standards to pass encounter information back to the home office, but it would have to use the standard claims transaction to submit a claim to another health plan. Another example might be transactions within Federal agencies and their contractors and between State agencies within the same State. For example, Medicare enters into contracts with insurance companies and common working file sites that process Medicare claims using government furnished software. There is constant communication, on a private network, between HCFA Central Office and the Medicare carriers, intermediaries and common working file sites. This communication may continue in nonstandard mode. However, these contractors must comply with the standards when exchanging any of the transactions covered by HIPAA with an entity outside these ''corporate'' boundaries.

Although there are situations in which the use of the standards is not required (for example, health care providers may continue to submit paper claims and employers are not required to use any of the standard transactions), we stress that a standard may be used voluntarily in any situation in which it is not required.

B. Definitions

Section 1171 of the Act defines several terms and our proposed rules would, for the most part, simply restate the law. The terms that we are defining in this proposed rule follow:

1. *ASC X12* stands for the Accredited Standards Committee chartered by the American National Standards Institute to design national electronic standards for a wide range of business applications.

2. *ASC X12N* stands for the ASC X12 subcommittee chartered to develop electronic standards specific to the insurance industry.

3. Code set.

We would define ''code set'' as section 1171(1) of the Act does: ''code set'' means any set of codes used for encoding data elements, such as tables of terms, medical concepts, medical diagnosis codes, or medical procedure codes.

4. Health care clearinghouse.

We would define ''health care clearinghouse'' as section 1171(2) of the Act does, but we are adding a further, clarifying sentence. The statute defines a ''health care clearinghouse'' as a public or private entity that processes or facilitates the processing of nonstandard data elements of health information into standard data elements. We would

further explain that such an entity is one that currently receives health care transactions from health care providers and other entities, translates the data from a given format into one acceptable to the intended recipient, and forwards the processed transaction to appropriate health plans and other health care clearinghouses, as necessary, for further action.

There are currently a number of private clearinghouses that perform these functions for health care providers. For purposes of this rule, we would consider billing services, repricing companies, community health management information systems or community health information systems, value-added networks, and switches performing these functions to be health care clearinghouses.

5. Health care provider.

As defined by section 1171(3) of the Act, a ''health care provider'' is a provider of services as defined in section 1861(u) of the Act, a provider of medical or other health services as defined in section 1861(s) of the Act, and any other person who furnishes health care services or supplies. Our regulations would define ''health care provider'' as the statute does and clarify that the definition of a health care provider is limited to those entities that furnish, or bill and are paid for, health care services in the normal course of business.

For a more detailed discussion of the definition of health care provider, we refer the reader to our proposed rule, HCFA–0045-P, Standard Health Care Provider Identifier, published elsewhere in this **Federal Register**.

6. Health information.

''Health information,'' as defined in section 1171 of the Act, means any information, whether oral or recorded in any form or medium, that—

- Is created or received by a health care provider, health plan, public health authority, employer, life insurer, school or university, or health care clearinghouse; and
- Relates to the past, present, or future physical or mental health or condition of an individual, the provision of health care to an individual, or the past, present, or future payment for the provision of health care to an individual.

We propose the same definition for our regulations.

7. Health plan.

We propose that a ''health plan'' be defined essentially as section 1171 of the Act defines it. Section 1171 of the Act cross refers to definitions in section 2791 of the Public Health Service Act (as added by Public Law 104–191, 42 U.S.C. 300gg–91); we would incorporate those definitions as currently stated into our proposed definitions for the convenience of the public. We note that many of these terms are defined in other statutes, such as the Employee Retirement Income Security Act of 1974 (ERISA), Public Law 93–406, 29 U.S.C. 1002(7) and the Public Health Service Act. Our definitions are based on the roles of plans in conducting administrative transactions, and any differences should not be construed to affect other statutes.

For purposes of implementing the provisions of administrative simplification, a ''health plan'' would be an individual or group health plan that provides, or pays the cost of, medical care. This definition includes, but is not limited to, the 13 types of plans listed in the statute. On the other hand, plans such as property and casualty insurance plans and workers compensation plans, which may pay health care costs in the course of administering nonhealth care benefits, are not considered to be health plans in the proposed definition of health plan. Of course, these plans may voluntarily adopt these standards for their own business needs. At some future time, the Congress may choose to expressly include some or all of these plans in the list of health plans that must comply with the standards.

Health plans often carry out their business functions through agents, such as plan administrators (including third party administrators), entities that are under ''administrative services only'' (ASO) contracts, claims processors, and fiscal agents. These agents may or may not be health plans in their own right; for example, a health plan may act as another health plan's agent as another line of business. As stated earlier, a health plan that conducts HIPAA transactions through an agent is required to assure that the agent meets all HIPAA requirements that apply to the plan itself.

''Health plan'' includes the following, singly or in combination:

a. ''Group health plan'' (as currently defined by section 2791(a) of the Public Health Service Act). A group health plan is a plan that has 50 or more participants (as the term ''participant'' is currently defined by section 3(7) of ERISA) or is administered by an entity other than the employer that established and maintains the plan. This definition includes both insured and self-insured plans. We define ''participant'' separately below.

Section 2791(a)(1) of the Public Health Service Act defines ''group health plan'' as an employee welfare benefit plan (as currently defined in section 3(1) of ERISA) to the extent that the plan provides medical care, including items and services paid for as medical care, to employees or their dependents directly or through insurance, or otherwise.

It should be noted that group health plans that have fewer than 50 participants and that are administered by the employer would be excluded from this definition and would not be subject to the administrative simplification provisions of HIPAA.

b. ''Health insurance issuer'' (as currently defined by section 2791(b) of the Public Health Service Act).

Section 2791(b)(2) of the Public Health Service Act currently defines a ''health insurance issuer'' as an insurance company, insurance service, or insurance organization that is licensed to engage in the business of insurance in a State and is subject to State law that regulates insurance.

c. ''Health maintenance organization'' (as currently defined by section 2791(b) of the Public Health Service Act).

Section 2791(b) of the Public Health Service Act currently defines a ''health maintenance organization'' as a Federally qualified health maintenance organization, an organization recognized as such under State law, or a similar organization regulated for solvency under State law in the same manner and to the same extent as such a health maintenance organization. These organizations may include preferred provider organizations, provider sponsored organizations, independent practice associations, competitive medical plans, exclusive provider organizations, and foundations for medical care.

d. Part A or Part B of the Medicare program (title XVIII of the Act).

e. The Medicaid program (title XIX of the Act).

f. A ''Medicare supplemental policy'' as defined under section 1882(g)(1) of the Act.

Section 1882(g)(1) of the Act defines a ''Medicare supplemental policy'' as a health insurance policy that a private entity offers a Medicare beneficiary to provide payment for expenses incurred for services and items that are not reimbursed by Medicare because of deductible, coinsurance, or other limitations under Medicare. The statutory definition of a Medicare supplemental policy excludes a number of plans that are generally considered to be Medicare supplemental plans, such as health plans for employees and former employees and for members and former members of trade associations and unions. A number of these health plans may be included under the

definitions of ''group health plan'' or ''health insurance issuer'', as defined in a. and b. above.

g. A ''long-term care policy,'' including a nursing home fixed-indemnity policy. A ''long-term care policy'' is considered to be a health plan regardless of how comprehensive it is. We recognize the long-term care insurance segment of the industry is largely unautomated and we welcome comments regarding the impact of HIPAA on the long-term care segment.

h. An employee welfare benefit plan or any other arrangement that is established or maintained for the purpose of offering or providing health benefits to the employees of two or more employers. This includes plans and other arrangements that are referred to as multiple employer welfare arrangements (''MEWAs'') as defined in section 3(40) of ERISA.

i. The health care program for active military personnel under title 10 of the United States Code.

j. The veterans health care program under chapter 17 of title 38 of the United States Code.

This health plan primarily furnishes medical care through hospitals and clinics administered by the Department of Veterans Affairs for veterans with a service-connected disability that is compensable. Veterans with non-service-connected disabilities (and no other health benefit plan) may receive health care under this health plan to the extent resources and facilities are available.

k. The Civilian Health and Medical Program of the Uniformed Services (CHAMPUS), as defined in 10 U.S.C. 1072(4).

CHAMPUS primarily covers services furnished by civilian medical providers to dependents of active duty members of the uniformed services and retirees and their dependents under age 65.

l. The Indian Health Service program under the Indian Health Care Improvement Act (25 U.S.C. 1601 *et seq.*).

This program furnishes services, generally through its own health care providers, primarily to persons who are eligible to receive services because they are of American Indian or Alaskan Native descent.

m. The Federal Employees Health Benefits Program under 5 U.S.C. chapter 89.

This program consists of health insurance plans offered to active and retired Federal employees and their dependents. Depending on the health plan, the services may be furnished on a fee-for-service basis or through a health maintenance organization.

Note: Although section 1171(5)(M) of the Act refers to the ''Federal Employees Health Benefit Plan,'' this and any other rules adopting administrative simplification standards will use the correct name, the Federal Employees Health Benefits Program. One health plan does not cover all Federal employees; there are over 350 health plans that provide health benefits coverage to Federal employees, retirees, and their eligible family members. Therefore, we will use the correct name, the Federal Employees Health Benefits Program, to make clear that the administrative simplification standards apply to all health plans that participate in the Program.

n. Any other individual or group health plan, or combination thereof, that provides or pays for the cost of medical care.

We would include a fourteenth category of health plan in addition to those specifically named in HIPAA, as there are health plans that do not readily fit into the other categories but whose major purpose is providing health benefits. The Secretary would determine which of these plans are health plans for purposes of title II of HIPAA. This category would include the Medicare Plus Choice plans that will become available as a result of section 1855 of the Act as amended by section 4001 of the Balanced Budget Act of 1997 (Pub. L. 105–33) to the extent that these health plans do not fall under any other category.

8. Medical care.

''Medical care,'' which is used in the definition of health plan, would be defined as current section 2791 of the Public Health Service Act defines it: the diagnosis, cure, mitigation, treatment, or prevention of disease, or amounts paid for the purpose of affecting any body structure or function of the body; amounts paid for transportation primarily for and essential to these items; and amounts paid for insurance covering the items and the transportation specified in this definition.

9. Participant.

We would define the term ''participant'' as section 3(7) of ERISA currently defines it: a ''participant'' is any employee or former employee of an employer, or any member or former member of an employee organization, who is or may become eligible to receive a benefit of any type from an employee benefit plan that covers employees of such an employer or members of such organizations, or whose beneficiaries may be eligible to receive any such benefits. An ''employee'' would include an individual who is treated as an employee under section 401(c)(1) of the Internal Revenue Code of 1986 (26 U.S.C. 401(c)(1)).

10. Small health plan.

We would define a ''small health plan'' as a group health plan with fewer than 50 participants.

The HIPAA does not define a ''small health plan'' but instead leaves the definition to be determined by the Secretary. The Conference Report suggests that the appropriate definition of a ''small health plan'' is found in current section 2791(a) of the Public Health Service Act, which is a group health plan with fewer than 50 participants. We would also define small individual health plans as those with fewer than 50 participants.

11. Standard.

Section 1171 of the Act defines ''standard,'' when used with reference to a data element of health information or a transaction referred to in section 1173(a)(1) of the Act, as any such data element or transaction that meets each of the standards and implementation specifications adopted or established by the Secretary with respect to the data element or transaction under sections 1172 through 1174 of the Act.

Under our definition, a standard would be a set of rules for a set of codes, data elements, transactions, or identifiers promulgated either by an organization accredited by ANSI or the HHS for the electronic transmission of health information.

12. Transaction.

''Transaction'' would mean the exchange of information between two parties to carry out financial and administrative activities related to health care. A transaction would be (a) any of the transactions listed in section 1173(a)(2) of the Act and (b) any determined appropriate by the Secretary in accordance with section 1173(a)(1)(B) of the Act. We present them below in the order in which we propose standards for them in the regulations text.

A ''transaction'' would mean any of the following:

a. Health claims or equivalent encounter information.

This transaction may be used to submit health care claim billing information, encounter information, or both, from health care providers to health plans, either directly or via intermediary billers and claims clearinghouses.

b. Health care payment and remittance advice.

This transaction may be used by a health plan to make a payment to a financial institution for a health care provider (sending payment only), to send an explanation of benefits or a remittance advice directly to a health care provider (sending data only), or to

make payment and send an explanation of benefits remittance advice to a health care provider via a financial institution (sending both payment and data).

c. Coordination of benefits.

This transaction can be used to transmit health care claims and billing payment information between health plans with different payment responsibilities where coordination of benefits is required or between health plans and regulatory agencies to monitor the rendering, billing, and/or payment of health care services within a specific health care/insurance industry segment.

In addition to the nine electronic transactions specified in section 1173(a)(2) of the Act, section 1173(f) directs the Secretary to adopt standards for transferring standard data elements among health plans for coordination of benefits and sequential processing of claims. This particular provision does not state that there should be standards for electronic transfer of standard data elements among health plans. However, we believe that the Congress, when writing this provision, intended for these standards to apply to the electronic form for coordination of benefits and sequential processing of claims. The Congress expressed its intent on these matters generally in section 1173(a)(1)(B), where the Secretary is directed to adopt ''other financial and administrative transactions * * * consistent with the goals of improving the operation of the health care system and reducing administrative costs.''

d. Health claim status.

This transaction may be used by health care providers and recipients of health care products or services (or their authorized agents) to request the status of a health care claim or encounter from a health plan.

e. Enrollment and disenrollment in a health plan.

This transaction may be used to establish communication between the sponsor of a health benefit and the health plan. It provides enrollment data, such as subscriber and dependents, employer information, and health care provider information. The sponsor is the backer of the coverage, benefit or product. A sponsor can be an employer, union, government agency, association, or insurance company. The health plan refers to an entity that pays claims, administers the insurance product or benefit, or both.

f. Eligibility for a health plan.

This transaction may be used to inquire about the eligibility, coverage, or benefits associated with a benefit plan, employer, plan sponsor, subscriber, or a dependent under the subscriber's policy. It also can be used to communicate information about or changes to eligibility, coverage, or benefits from information sources (such as insurers, sponsors, and health plans) to information receivers (such as physicians, hospitals, third party administrators, and government agencies).

g. Health plan premium payments.

This transaction may be used by, for example, employers, employees, unions, and associations to make and keep track of payments of health plan premiums to their health insurers.

h. Referral certification and authorization.

This transaction may be used to transmit health care service referral information between health care providers, health care providers furnishing services, and health plans. It can also be used to obtain authorization for certain health care services from a health plan.

i. First report of injury.

This transaction may be used to report information pertaining to an injury, illness, or incident to entities interested in the information for statistical, legal, claims, and risk management processing requirements. Although we are proposing a definition for this transaction, we are not proposing a standard for it in this **Federal Register** document. (See section E.9 for a more in-depth discussion.) We will publish a separate proposed rule for it.

j. Health claims attachments.

This transaction may be used to transmit health care service information, such as subscriber, patient, demographic, diagnosis, or treatment data for the purpose of a request for review, certification, notification, or reporting the outcome of a health care services review. Although we are proposing a definition for this transaction, we are not proposing a standard for it in this **Federal Register** document because the legislation gave the Secretary an additional year to designate this standard. We will publish a separate proposed rule for it.

k. Other transactions as the Secretary may prescribe by regulation.

Under section 1173(a)(1)(B) of the Act, the Secretary shall adopt standards, and data elements for those standards, for other financial and administrative transactions deemed appropriate by the Secretary. These transactions would be consistent with the goals of improving the operation of the health care system and reducing administrative costs.

C. Effective Dates—General

Health plans would be required by Part 142 to comply with our requirements as follows:

1. Each health plan that is not a small health plan would have to comply with the requirements of Part 142 no later than 24 months after the effective date of the final rule.

2. Each small health plan would have to comply with the requirements of Part 142 no later than 36 months after the effective date of the final rule.

Health care providers and health care clearinghouses would be required to begin using the standard by 24 months after the effective date of the final rule.

(The effective date of the final rule will be 60 days after the final rule is published in the **Federal Register**.)

Provisions of trading partner agreements that stipulate data content, format definitions or conditions that conflict with the adopted standard would be invalid beginning 36 months from the effective date of the final rule for small health plans, and 24 months from the effective date of the final rule for all other health plans.

If HHS adopts a modification to an implementation specification or a standard, the implementation date of the modification would be no earlier than the 180th day following the adoption of the modification. HHS would determine the actual date, taking into account the time needed to comply due to the nature and extent of the modification. HHS would be able to extend the time for compliance for small health plans. This provision would be at § 142.106.

The law does not address scheduling of implementation of the standards; it gives only a date by which all concerned must comply. As a result, any of the health plans, health care clearinghouses, and health care providers may implement a given standard earlier than the date specified in the subpart created for that standard. We realize that this may create some problems temporarily, as early implementers would have to be able to continue using old standards until the new ones must, by law, be in place.

At the WEDI Healthcare Leadership Summit held on August 15, 1997, it was recommended that health care providers not be required to use any of the standards during the first year after the adoption of the standard. However, willing trading partners could implement any or all of the standards by mutual agreement at any time during the 2-year implementation phase (3-year implementation phase for small health plans). In addition, it was recommended

that a health plan give its health care providers at least 6 months notice before requiring them to use a given standard.

We welcome comments specifically on early implementation as to the extent to which it would cause problems and how any problems might be alleviated.

D. Data Content

[Please label any written comments or e-mailed comments about this section with the subject: Data Content]

We propose standard data content for each adopted standard. There are two aspects of data content standardization: (1) Standardization of data elements, including their formats and definition, and (2) standardization of the code sets or values that can appear in selected data elements. A telephone number is an example of a data element that has a standard definition and format, but does not have an enumerated set of valid codes or values. A patient's diagnosis is an example of a data element that has a standard definition, a standard format, and a set of valid codes. Information that would facilitate data content standardization, while also facilitating identical implementations, would consist of implementation guides, data conditions, and data dictionaries, as noted in the addenda to this proposed rule, and the standard code sets for medical data that are part of this rule. Data conditions are rules that define the situations when a particular data element or record/segment can be used. For example, ''the name of the tribe'' applies only to Indian Health Service claims. The defining rule for that data element would be ''must be entered if claim is Indian Health Service''.

1. Data Element and Record/Segment Content

Once we publish the final rule in the **Federal Register** and it is effective, there will be no additional data element or record/segment content modifications in any of the transactions for at least one year.

In our evaluation and recommendation for each proposed standard transaction, we have tried to meet as many business needs as possible while retaining our commitment to the guiding principles. We encourage comments on how the standards may be improved.

It is important to note that all data elements would be governed by the principle of a maximum defined data set. No one would be able to exceed the data sets defined in the final rule, until that rule is amended one or more years from the effective date of the final rule. This means that if a transaction has all of the data possible—based on the appropriate implementation guide, data content and data conditions specifications, and data dictionary—then a health plan would have to accept the transaction and process it. This does not mean, however, that the health plan would have to store or use information that it does not need in order to process a claim or encounter, except for audit trail purposes or for coordination of benefits if applicable. It does mean that the health plan would not be able to require additional information, and it does mean that the health plan would not be able to reject a transaction because it contains information the health plan does not want. This principle applies to the data elements of all transactions proposed for adoption in this proposed rule.

2. Code Sets

[Please label any written comments or e-mailed comments about this section with the subject: Code Sets]

a. Background

The administrative simplification provisions of HIPAA require the Secretary of HHS to adopt standards for code sets for administrative and financial transactions. Two types of code sets are required for data elements in the transaction standards to be established under HIPAA: (1) Large code sets for medical data, including coding systems for:

- Diseases, injuries, impairments, other health related problems, and their manifestations;
- Causes of injury, disease, impairment, or other health-related problems;
- Actions taken to prevent, diagnose, treat, or manage diseases, injuries, and impairments and any substances, equipment, supplies, or other items used to perform these actions; and (2) smaller sets of codes for other data elements such as race/ethnicity, type of facility, and type of unit.

A separate HIPAA implementation team co-chaired by representatives from HCFA, the Centers for Disease Control/National Center for Health Statistics, and the National Institutes of Health/National Library of Medicine, and including members from other interested HHS agencies and Federal Departments, was established to recommend the code sets that should become HIPAA standards for medical data. HHS efforts to identify candidate medical data code sets were coordinated with the NCVHS Subcommittee on Health Data Needs, Standards, and Security. The smaller sets of codes for other data elements in transactions standards are part of the transaction standards themselves and are specified in their implementation guides.

The following medical data code sets are already in use in administrative and financial transactions:

ICD–9–CM: The International Classification of Diseases, Ninth Revision, Clinical Modification, classifies both diagnoses (Volumes 1 and 2) and procedures (Volume 3). All hospitals and ambulatory care settings use it to capture diagnoses for administrative transactions. The procedure system is used for all in-patient procedure coding for administrative transactions. The ICD–9–CM was adopted for use in January 1979.

The ICD–9–CM Coordination and Maintenance Committee is a Federal interdepartmental committee charged with maintaining and updating the ICD–9–CM. Requests for modification are handled through the ICD–9–CM Coordination and Maintenance Committee; no official changes are made without being brought before this committee. Suggestions for modifications come from both the public and private sectors and interested parties are asked to submit recommendations for modification prior to a scheduled meeting.

Modifications are not considered without the expert advice of clinicians, epidemiologists, and nosologists (both public and private sectors). The meetings are open to the public and are announced in the **Federal Register**; all interested members of the public are invited to attend and submit written comments. Meetings are held twice each year.

Approved modifications become effective October 1 of the following year. Changes to ICD–9–CM are published on the NCHS and HCFA websites, as well as by the American Hospital Association (AHA) and other private sector vendors.

CPT: Physicians' Current Procedural Terminology is used by physicians and other health care professionals to code their services for administrative transactions. CPT is level one of the Health Care Financing Administration Procedure Coding System (HCPCS).

CPT codes are updated annually by the AMA. The CPT Panel is comprised of 15 physicians, 10 nominated by the AMA and one each nominated by Blue Cross/Blue Shield of America (BCBSA), HIAA, HCFA, and AHA. Meetings are not open to the public.

Alpha-numeric HCPCS: Alpha-numeric Health Care Financing Administration Procedure Coding System (HCPCS) contains codes for medical equipment and supplies;

prosthetics and orthotics; injectable drugs; transportation services; and other services not found in CPT. Alpha-numeric codes are level 2 of HCPCS. Its use is generally limited to ambulatory settings. The Omnibus Budget Reconciliation Act of 1986 requires the use of HCPCS in the Medicare program for services in hospital outpatient departments.

Level II of HCPCS is updated annually and is maintained jointly by the BCBSA, the Health Insurance Association of America and HCFA.

HCFA's regional offices assure coordination of local code assignments among the payers in a State; local codes must be approved by HCFA's central office to assure they do not duplicate national codes in CPT or Level II of HCPCS.

Decisions regarding additions, deletions and revisions to Level II of HCPCS are made by the Alpha-Numeric Editorial Panel. This Panel, which meets three times a year, is comprised of representatives of the BCBSA, HIAA, and HCFA; the meetings are not open to the public. There are formal mechanisms to coordinate this Panel's activities with CPT and the American Dental Association's (ADA) procedure coding system.

The revised HCPCS is available free of charge as a public use file.

CDT: Current Dental Terminology is used in reporting dental services. CDT codes are also included in alpha-numeric HCPCS with a first character of D.

Codes are revised on a five-year cycle by the ADA through its Council on Dental Benefits Program. Meetings are not open to the public.

NDC: National Drug Codes are used in reporting prescription drugs in pharmacy transactions and some claims by health care professionals. The codes are assigned when the drugs are approved or repackaged and may be found on the packaging of drugs.

i. Candidates for the Standards

The principal sources of input to the recommendations for medical data code sets were:

(a) The ANSI HISB Standards Inventory.

The inventoried code sets are:

ICD–9–CM, which consists of both diagnoses and procedure sections. The diagnosis system is widely used in the health care industry. All hospitals and ambulatory care settings use it to capture diagnoses. The procedure system is used for all in patient procedure coding.

ICD–10–CM for diagnosis, which is under development as a replacement to the diagnosis section of ICD–9–CM and not yet in use in this country. ICD–10 was developed by the World Health Organization and has been implemented in approximately 37 countries to report mortality data. These are data that are taken and coded from death certificates. However, since our country's need for morbidity data cannot be satisfied by ICD–10, the United States is preparing a clinical modification of ICD–10 (ICD–10–CM). The public has been given an opportunity to review and comment on the current draft of ICD–10–CM. The final draft should be available in the summer of 1998.

- ICD–10–PCS for procedures, which is under development for use in the U.S. only as a replacement to the procedure section of ICD–9–CM.
- CPT, which is used by all physicians and many other practitioners to code their services. It is also used by hospital outpatient departments to code certain ambulatory services.
- SNOMED (Systematized Nomenclature of Medicine), which is being used by the developers of computer-based patient record systems. It is not used in administrative transactions.
- CDT, which is used by all practicing dentists to code their services for administrative transactions.
- NIC (Nursing Interventions Classification), which is not used in administrative transactions in this country.
- LOINC (Logical Observation Identifier Names and Codes), which is being used in a pilot-test by the Centers for Disease Control to report tests as evidence of a communicable disease. It is also being tested in electronic transactions involving detailed clinical laboratory tests and results. It is not used in administrative transactions.
- HHCC (Home Health Care Classification system), which is not being used as a reporting system in this country.

(b) A more extensive inventory of existing coding and classification systems prepared by the coding and classification implementation team itself and evaluated against the general HIPAA standards evaluation criteria (as found in section I.B., Process for developing standards for this proposed rule).

This larger inventory (which will be placed on the home page of the National Center for Health Statistics at: http://www.cdc.gov/nchswww/nchshome.htm) does not include any additional viable candidates for the initial standards for administrative code sets to be established under this proposed rule. It does contain some additional systems that may be applicable to elements of the claims attachments standard (to be issued on a later timetable) and to eventual HIPAA recommendations to the Congress regarding full electronic medical records.

(c) The oral and written testimony submitted at an NCVHS public hearing to discuss medical/clinical coding and classification issues in connection with the requirements of HIPAA on April 15–16, 1997. The following entities presented testimony at the hearing: AMA, AHA, American Health Information Management Association, American College of Obstetricians and Gynecologists, American Academy of Pediatrics, American Nurses Association, National Association for Home Care, ADA, Family Practice Primary Care Work Group, National Association of Children's Hospitals and Related Institutions, Food and Drug Administration, College of American Pathologists, the Omaha System, developers of new nomenclature systems, research groups, publishers, consultants in coding, managed care organizations, software vendors, and informatics specialists.

(d) The NCVHS' recommendations to the Secretary, HHS regarding codes and classifications.

(e) Comments received in response to presentations at professional meetings and at the July 9, 1997, public meeting held by HHS on progress on selecting the initial HIPAA standards.

For the hearing on April 15–16, 1997, the NCVHS invited interested organizations representing both the users and developers of medical/clinical classification systems to present written and/or oral testimony responding to the following questions.

''—What medical/clinical codes and classifications do you use in administrative transactions now? What do you perceive as the main strengths and weaknesses of current methods for coding and classification of encounter and/or enrollment data?

''—What medical/clinical codes and classifications do you recommend as initial standards for administrative transactions, given the time frames in the HIPAA? What specific suggestions would you like to see implemented regarding coding and classification?

''—Prior to the passage of HIPAA, the National Center for Health Statistics initiated development of a clinical modification of the International Classification of Diseases-10 (ICD–10–CM), and HCFA undertook development of a new procedure coding system for inpatient procedures (called ICD–10–PCS), with a plan to implement them simultaneously in the year 2000. On the pre-HIPAA schedule, they will be released to the field for

evaluation and testing by 1998. If some version of ICD is to be used for administrative transactions, do you think it should be ICD–9–CM or ICD–10–CM and ICD–10–PCS, assuming that field evaluations are generally positive?

''—Recognizing that the goal of P.L. 104–191 is administrative simplification, how, from your perspective, would you deal with the current coding environment to improve simplification, reduce administrative burden, but also obtain medically meaningful information?

''—How should the ongoing maintenance of medical/clinical code sets and the responsibility, intellectual input and funding for maintenance be addressed for the classification systems included in the standards? What are the arguments for having these systems in the public domain versus in the private sector, with or without copyright?

''—What would be the resource implications of changing from the coding and classification systems that you currently are using in administrative transactions to other systems? How do you weigh the costs and benefits of making such changes?

''—A Coding and Classification Implementation Team has been established within the Department of Health and Human Services to address the requirements of P.L. 104–191; the Team's charge is enclosed. Does your organization have any concerns about the process being undertaken by the Department to carry out the requirements of the law in regard to coding and classification issues? If so, what are those concerns and what suggestions do you have for improvements?''

In general, those testifying at the April 15–16 hearing recommended that systems currently in use be designated as standards for the year 2000, since potential replacements were not yet fully tested and could not be implemented throughout the health care system by 2000. Testimony supported moving to ICD–10–CM for medical diagnoses after the year 2000 (different timetables were mentioned). Testimony provided by representatives from the American Psychiatric Association described the ongoing efforts to make the Diagnostic and Statistical Manual of Mental and Behavioral Disorders (DSM) completely compatible with ICD. The American Psychiatric Association has crosswalked the appropriate ICD–9–CM codes to what appear in the DSM for its diagnostic categories and is doing the same for ICD–10–CM for diagnosis. The mapping between DSM and ICD–10–CM for diagnosis is more precise than is possible for ICD–9–CM so the APA favors moving to ICD–10–CM for diagnosis as soon as possible.

Many of those testifying emphasized the need to change to a less fragmented, overlapping, and duplicative approach to procedure coding, but sometime after the year 2000. Different potential approaches to achieving a more integrated procedure coding system were mentioned. Many identified current variations in the implementation of coding systems and the use of local HCPCS codes as problems that should be addressed.

In general, those testifying approved the implementation team's charge, which includes an initial focus on the administrative standards for the year 2000 and longer term attention to recommendations for the more clinically-detailed vocabulary needed for full electronic medical records. Some of the developers of vocabularies and classifications who presented testimony emphasized the potential usefulness of their systems for full computer-based patient records, rather than for the administrative transactions that are the focus of the initial HIPAA standards.

Comments on codes and classifications sets made at the June 3–4, 1997, Health Data Needs, Standards and Security Subcommittee hearings in San Francisco, California echoed those heard at the April hearing.

On June 25, 1997, the NCVHS submitted the following recommendations to the Secretary of HHS regarding standards for codes and classifications for administrative transactions:

The Committee recommends that diagnosis and procedure coding continue to use the current code sets because replacements will not be ready for implementation by the year 2000. ICD–9–CM diagnosis codes, ICD–9–CM Volume 3 procedure codes, and HCPCS (including Current Procedural Terminology (CPT) and Current Dental Terminology (CDT)) procedure codes should be adopted as the standards to be implemented by the year 2000. Annual updates to ICD–9–CM and HCPCS should continue to follow the schedule currently used. In addition, we recommend that you advise industry to build and modify their information systems to accommodate a change to ICD–10–CM diagnosis coding in the year 2001 and a major change to a unified approach to coding procedures (yet to be defined) by the year 2002 or 2003. We recommend that you identify and implement an approach for procedure coding that addresses deficiencies in the current systems, including issues of specificity and aggregation, unnecessary redundancy, and incomplete coverage of health care providers and settings.

At the July 9, 1997, public meeting on progress on selecting the HIPAA standards, the implementation team presented an overview of its planned recommendations for coding and classification standards for the year 2000. The team's recommendations were similar to those of the NCVHS but included the use of NDC codes for pharmacy transactions that the NCVHS did not address. The implementation team did not recommend a specific timetable for changes in the standards after the year 2000. The team believed that its recommendations for changes after the year 2000 should await the results of field testing of ICD–10–CM for diagnosis and ICD–10–PCS for procedures (which should be available in March 1998) and further consideration of options for moving toward a more integrated approach to procedure coding.

One of the coding systems that the implementation team considered to be promising for future implementation was the Universal Product Numbers (UPNs) system. The UPN system is a product numbering technology that uses human readable and bar code formats to identify products. A bar code and human readable number, which is unique to a particular product, is printed on the label or box as part of the production line process. There are currently two separate and different UPN coding systems that are generally accepted and recognized for health care products. One is numeric, a fixed 14 digit number, and the other an alpha-numeric format, a variable length number 8 to 20 digits. The numeric format is the system of the Health Care Uniform Code Council (UCC) and the alpha-numeric format is used by the Health Industry Business Communications Council (HIBCC). The first series of digits are assigned by one of these two private companies and identify the manufacturer or a repackager. The remaining digits are assigned by the manufacturer or repackager and are assigned according to the user's own standards and specifications. A manufacturer or repackager can apply to either one of these companies to use its system. The application fees, which are collected by either UCC or HIBCC, vary based on the manufacturer's or repackager's sales volume.

The Department of Defense has started to use UPNs for its prime vendor program. Currently, there are purchasers and providers of medical equipment that are using the UPN system for inventory purposes, but, at this time, there are no insurers that pay for health care products using the UPN system. California Medicaid, however, has plans to begin using UPNs as part of its system.

At this time, approximately 30 percent of the health care products do not have a UPN assigned to them. For this reason, in addition to the fact that no insurer currently uses UPNs for reimbursement, UPNs were not included in the initial list of standards.

However, it is a coding system that bears close examination during the next few years as a possible replacement for alpha-numeric HCPCS codes for health care products. Some consideration is being given to conducting a demonstration study in the Medicare program on the use of UPNs for reimbursement.

Comments on the use of the UPNs as a national coding system are being sought. In particular, comments on issues such as timing of implementation, any complications presented by the existence of multiple bodies issuing UPN codes, the acceptability of varying lengths and formats, and the frequent changes in manufacture and packaging size would be helpful.

ii. Changes to HCPCS for Implementation in the Year 2000

In proposing the use of the existing coding systems as the standards for the year 2000, many participants at public meetings voiced concern about overlaps in several of the coding systems, problems with HCPCS local codes, differences in implementation of NDC codes in different systems, and differences between the CDT codes in HCPCS and those issued by the ADA. It was repeatedly suggested that these issues be resolved and overlaps be eliminated for standards adopted in the year 2000. After careful consideration of all public input and of the options for modifying HCPCS in the relatively near term, the implementation team is recommending that changes be implemented in HCPCS in the year 2000 to reduce its overlap with other coding systems.

HCPCS contains three levels. Level 1, CPT, is developed and maintained by the AMA and captures physician services. Level 2, alpha-numeric HCPCS, contains codes for products, supplies, and services not included in CPT. Level 3, local codes, includes all the codes developed by insurers and agencies to fulfill local needs.

We are proposing the adoption of HCPCS levels 1 and 2 for implementation in the year 2000. In addition, we are proposing to modify HCPCS level 3 for the year 2000 to eliminate overlaps and duplications.

Most third-party public and private health insurers (such as Medicare contractors, Medicaid program and fiscal agents, and private commercial health insurers) use HCPCS as a basis for paying claims for medical services provided on a fee-for-service basis and for monitoring the quality and utilization of care. In addition, integrated health systems, such as managed care organizations, also use HCPCS as a basis for monitoring utilization and quality of care and for negotiating prospective fees and capitated payments. Research organizations use the HCPCS data collected by health insurers to monitor and evaluate these programs and regional/national patterns of care.

As previously stated, HCPCS alpha-numeric codes capture products, supplies, and services not included in CPT. The ''D'' codes in the HCPCS system are dental codes created by the ADA and published as CDT. However, in HCPCS, the first digit ''0'' in CDT is replaced by a ''D'' to eliminate confusion and overlap with certain CPT codes. The ADA has agreed to replace their first digit ''0'' with a ''D'' so that CDT can become the national standard. There would no longer be dental codes within HCPCS. Consequently, CDT codes will no longer be issued within HCPCS as of the year 2000. The ADA will be the sole source of the authoritative version of CDT.

The ''J'' codes within alpha-numeric HCPCS are for drugs. A separate coding system, the NDC developed by the Food and Drug Administration, is also used to report drug claims in the ANSI X12N 837—Health Care Claim: Professional and in pharmacy transactions. The NDC system, which has 11-digit codes, is more precise and more current than the HCPCS ''J'' codes. NDC identifies drugs prescribed down to the manufacturer, product name and package size. NDC codes are assigned on a continuous basis throughout the year as new drug products are issued; ''J'' codes are assigned on an annual basis. Many providers are currently forced to maintain both ''J'' and NDC codes to provide data to different insurers. The majority of the local codes currently created were developed because of the lack of a ''J'' code for a new drug. Local codes are level 3 of the HCPCS and are assigned by local insurers or agencies where there is no national code. By eliminating ''J'' codes from alpha-numeric HCPCS codes and utilizing only NDC codes for drugs, greater national uniformity can be achieved, the workload of providers who previously had to utilize two drug coding systems will be reduced, and the need for local codes will diminish substantially.

HHS is, therefore, proposing that NDC codes become the national standard in the year 2000 for all types of transactions requiring drug codes and that ''J'' codes be deleted from alpha-numeric HCPCS. This would require those handling electronic administrative transactions to process 11-digit NDC codes in the year 2000.

Level 3 of HCPCS is intended to meet local needs and is established on a local basis by health insurers. There is no national registry for these local codes. We propose that, beginning in the year 2000, local codes be eliminated and that a national process be established for reviewing and approving codes that are needed by any public or private health insurer.

The first step in this process would be to ask public and private health insurers to review the local codes they use and to immediately eliminate those that duplicate a national HCPCS code or NDC code already in existence. (See the previous section for a discussion of NDC codes.) They would also be asked to eliminate those local codes for which there are few claims submissions (for example, fewer than 50 per year) and that could reasonably and effectively be reviewed by the health insurer. Health insurers would also be asked to eliminate those local codes which were established for administrative purposes, to facilitate claims payment, rather than to identify and describe medical services, supplies and procedures. (A code for ''administration of immunization at public health clinic'' is an example of a code that includes administrative information in addition to information about the clinical content of the service.) This purging would result in the elimination of the vast majority of local codes now in use. Any remaining local codes would then have to be submitted by the health insurer to HCFA for review and approval as temporary codes. The HCPCS panel currently meets every two to three months to approve requests for temporary codes. This process will be re-examined to determine if more frequent meetings are required.

The process would be modeled after the one that is currently used to review and approve code requests from Medicare and its contractors. Codes that are approved by HCFA would be established as national temporary codes that would be posted electronically and would be available for use by all health insurers. National temporary codes would be reviewed on an annual basis to make sure they are not duplicative of CPT codes or alpha-numeric codes that are newly established.

This new centralized process for establishing national temporary codes would run parallel to the process for establishing national CPT codes, alpha-numeric HCPCS codes, and NDC codes. It is expected that most of the codes submitted for approval by HCFA in this process would be for new medical technologies and services not yet approved for codes by CPT or the alpha-

numeric process or for other medical services/procedures covered by health insurers which have no associated CPT or alpha-numeric codes.

These recommendations are based on the following:

As stated earlier, many participants at public meetings voiced concerns about overlaps in codes that are used and the proliferation of local codes. Local codes that are duplicative of national codes create extra work and confusion for providers who must submit different codes to different health insurers. Local codes also make it more difficult for researchers and programs such as Medicaid and Medicare to evaluate and monitor patterns of care and the utilization and quality of care on a regional or national basis.

The use of local codes established for administrative purposes, to facilitate claims payment rather than to identify medical services, supplies and procedures, is contrary to the intent of the medical coding system, which is intended to describe medical services used to prevent, diagnose, treat or manage diseases, injuries, and impairments. Administrative functions necessary to process and facilitate claims by health insurers can be achieved by using ''administrative'' codes placed in fields other than those used for medical diagnosis and procedure codes or by attaching a modifier to a medical code. Because the need for new temporary codes is not unique to an individual health insurer, the new codes that are created as a result of this centralized process would be useful not just to the health insurer who submitted the original request for a code but also to many other health insurers across the country. By eliminating duplicative and otherwise unnecessary local codes and adding national temporary codes through the centralized process discussed above, we believe we are being consistent with the intent of HIPAA to simplify the administration of the claims review, payment and monitoring process.

We welcome comments and suggestions on this proposal for eliminating unnecessary local codes and establishing a centralized, national process for establishing national temporary codes. We seek input specifically on the problems and barriers to creating this type of process. We are also specifically looking for examples of the kinds of local codes that are now being used that would have to be replaced with national codes or for alternatives to the above-described process.

iii. Recommended Standards and Implementation Guides

The proposed standard code sets for different types of medical data are outlined below:

(a) Diseases, injuries, impairments, other health related problems, their manifestations, and causes of injury, disease, impairment, or other health-related problems.

The proposed standard code set for these conditions is the International Classification of Diseases, 9th edition, Clinical Modification, (ICD–9–CM), Volumes 1 and 2, as maintained and distributed by the National Center for Health Statistics, Centers for Disease Control and Prevention, U.S. Department of Health and Human Services. The specific data elements for which ICD–9–CM is the required code set are enumerated in the implementation guides for the transactions standards that require its use.

An area of weakness of the ICD–9–CM is that it is not always precise or unambiguous. However, there are no viable alternatives for the year 2000. Many problems cannot be resolved within the current structure, but are being addressed in the development of ICD–10–CM for diagnosis, which is expected to be ready for implementation some time after the year 2000.

The official coding guidelines for this proposed standard code set are in the public domain and available at no cost on the NCHS website at: http://www.cdc.gov/nchswww/about/otheract/icd9/icd9hp2.htm. Users without access to the Internet may purchase the official version of ICD–9–CM on CD–ROM from the Government Printing Office (GPO) at 1–202–512–1800 or fax 1–202–512–2250. The CD–ROM contains the ICD–9–CM classification and the coding guidelines. The guidelines are also included in code books and coding manuals published by not-for-profit (for example, the American Hospital Association and the American Health Information Management Association) and other private sector vendors.

(b) Procedures or other actions taken to prevent, diagnose, treat, or manage diseases, injuries and impairments.

(1) Physician Services

The proposed standard code set for these entities is the Current Procedural Terminology (CPT) (level 1 of HCPCS) as maintained and distributed by the AMA. The specific data elements for which CPT (including codes and modifiers) is a required code set are enumerated in the implementation guides for the transaction standards that require its use.

Narrative coding guidelines are presented at the beginning of each of the six sections of print edition of CPT and, in addition, special instructions for specific codes or groups of codes appear throughout CPT. CPT is available from the AMA at a charge as well as from several not-for-profit and other private sector vendors.

An area of weakness of the CPT is that it is not always precise or unambiguous. However, there are no viable alternatives for the year 2000.

(2) Dental Services

The proposed standard code set for these services is the Current Dental Terminology (CDT) as maintained and distributed by the ADA for a charge. The specific data elements for which CDT is a required code set are enumerated in the implementation guides for the transaction standards that require its use.

The official implementation guidelines for this standard appear in CDT as descriptors that explain the appropriate use of the codes. Copies of the ADA Current Procedural Terminology Second Edition (CDT–2) may be obtained by calling 1–800–947–4746. The ADA is in the process of developing CDT–3 for introduction in the year 2000.

(3) Inpatient Hospital Services

The proposed standard code set for these services is the International Classification of Diseases, 9th edition, Clinical Modification, Volume 3, as maintained and distributed by the Health Care Financing Administration, U.S. Department of Health and Human Services. The specific data elements for which ICD–9–CM, Volume 3, is a required code set are enumerated in the implementation guides for the transactions standards that require its use.

As stated earlier, an area of weakness of the ICD–9–CM is that it is not always precise or unambiguous. However, there are no viable alternatives for the year 2000 that are more precise or less ambiguous. Many problems cannot be resolved within the current structure but are being addressed in the development of ICD–10–PCS for procedures, which is expected to be ready for implementation some time after the year 2000.

The official coding guidelines for this standard are in the public domain and available at no cost on the NCHS website at http://www.cdc.gov/nchswww/about/otheract/icd9/icd9hp2.htm. Users without access to

the Internet may purchase the official version of ICD–9–CM on CD–ROM from the Government Printing Office at 1–202–512–1800 or fax 1–202–512–2250. The CD–ROM contains the ICD–9–CM classification and the coding guidelines. The guidelines are also included in code books and coding manuals published by not-for-profit (for example, the American Hospital Association and the American Health Information Management Association) and private sector vendors.

(c) Other Health-Related Services

The proposed standard code set for other health-related services is the Health Care Financing Administration Procedure Coding System (alpha-numeric HCPCS) as maintained and distributed by the Health Care Financing Administration, U.S. Department of Health and Human Services. We are proposing to make significant modifications to alpha-numeric HCPCS for the year 2000. These modifications are described in Section II.D.2.a.ii of this proposed rule.

The specific data elements for which alpha-numeric HCPCS (including codes and modifiers) is a required code set are enumerated in the implementation guides for the transaction standards that require its use.

Alpha-numeric HCPCS codes meet all but one of the guiding principles for choosing standards. An area of weakness is that it is not always precise or unambiguous. However, there are no viable alternatives for the year 2000 that are more precise or less ambiguous. Some of the areas of ambiguity in HCPCS (the ''J'' codes for drugs, local codes, variant CDT codes) have been addressed in the changes recommended for the year 2000.

The 1998 alpha-numeric HCPCS file (excluding the D procedure codes copyrighted by the ADA) is available from the HCFA website at http://www.hcfa.gov/stats/pufiles.htm. Users can also access this page by taking the Stats and Data link to the Browse/Download available PUFs link. The 1998 alpha-numeric HCPCS file is on the HCFA Public Use Files page under the Utilities/Miscellaneous heading.

The HCPCS is in an executable format, which includes 1998 alpha-numeric HCPCS in both Excel© and text, the 1998 Alpha-Numeric Index in both Portable Document Format© (PDF) and text, the 1998 Table of Drugs in both PDF and text, the 1998 HCPCS record layout in WordPerfect© and text, and a read me file in WordPerfect© and text.

(d) Drugs

The proposed standard code set for these entities is the National Drug Codes as maintained and distributed by the Food and Drug Administration, U.S. Department of Health and Human Services, in collaboration with drug manufacturers. The specific data elements for which NDC is a required code set are enumerated in the implementation guides for the transaction standards that require its use.

NDC codes as established by the Food and Drug Administration are made available on the individual drug package inserts and product labeling. The Food and Drug Administration, Center for Drug Evaluation and Research, Office of Management, Division of Database Management, prepares an annual update, with periodic cumulative supplements of the Approved Drug Products with Therapeutic Equivalence Evaluations for prescription drug products, over the counter drug products and discontinued drug products. The supplements are available on diskette, on a quarterly basis, from the National Technical Information Service at 703–487–6430. The files are also available on the Internet's World Wide Web on the CDER Home Page at http://www.fda.gov/cder. The NDC codes are also published in such drug publications as the Physicians' Desk Reference under the individual drug product listings and ''How supplied.''

(e) Other Substances, Equipment, Supplies, or Other Items Used in Health Care Services

The proposed standard code set for these entities is the Health Care Financing Administration Procedure Coding System (alpha-numeric HCPCS) as maintained and distributed by the Health Care Financing Administration, U.S. Department of Health and Human Services. We are proposing to make significant modifications to alpha-numeric HPCPS for the year 2000. These modifications are described in Section II.D.2.a.ii of this proposed rule. The specific data elements for which alpha-numeric HCPCS is a required code set are enumerated in the implementation guides for the transactions standards that require its use.

The recommended code sets adhere to the principles for guiding choices for the standards to be adopted under HIPAA as follows:

- Improve the efficiency and effectiveness of the health care system by leading to cost reductions for or improvements in benefits from electronic health care transactions.

Improvements in efficiency and effectiveness over the current *status quo* will result from: (a) The requirement for all those exchanging electronic transactions to use a single official implementation guide for each recommended code set; and (b) the proposed changes to HCPCS, which will eliminate overlap between NDC and HCPCS, eliminate one of the two current versions of CDT codes, and eliminate the use of local HCPCS codes that are known only to institutions that developed them.

- Meet the needs of the health data standards user community, particularly health care providers, health plans, and health care clearinghouses.

The recommended code sets meet some of the needs of the community. To meet all of the community's needs (e.g., elimination of overlap in procedure coding systems and better coverage of nursing and allied health services) will require changes to the code sets recommended or their replacement by newer systems, once these have been fully tested and revised. Essentially all segments of the health care community testified that there was no practical alternative to the recommended code sets for the year 2000, although they recommended changes after that time.

- Be consistent and uniform with the other HIPAA standards—their data element definitions and codes and their privacy and security requirements—and, secondarily, with other private and public sector health data standards.

All of the recommended code sets are required for selected data elements in more than one of the recommended transaction standards.

- Have low additional development and implementation costs relative to the benefits of using the standard.

The recommended code sets are currently used by many segments of the health care community.

- Be supported by an ANSI-accredited standards developing organization or other private or public organization that will ensure continuity and efficient updating of the standard over time.

All of the recommended code sets are supported by U.S. government agencies or private sector organizations that have demonstrated a commitment to maintaining them over time.

- Have timely development, testing, implementation, and updating procedures to achieve administrative simplification benefits faster.

All of the recommended code sets have existing procedures for updating at

least annually. NDC updates continually throughout the year.

• Be technologically independent of the computer platforms and transmission protocols used in electronic health transactions, except when they are explicitly part of the standard.

All of the recommended code sets are technologically independent of computer platforms and transmission protocols.

• Be precise and unambiguous, but as simple as possible.

There are some problems with lack of precision and ambiguity in all the recommended code sets, but there are no viable alternatives for the year 2000. In the case of ICD–9–CM, many problems cannot be resolved within the current structure but are being addressed in the development of ICD–10–CM for diagnosis and ICD–10–PCS for procedures, which are expected to be ready for implementation some time after 2000. Some of the sources of ambiguity in HCPCS (the ''J'' codes for drugs, local codes, variant CDT codes) have been addressed in the changes recommended for the year 2000. The movement to a single framework for procedure coding, sometime after the year 2000, will address other known problems with the procedure codes.

• Keep data collection and paperwork burdens on users as low as is feasible.

Because the recommended code sets are currently used throughout the health care community, they should not add substantially to data collection or paperwork burdens.

• Incorporate flexibility to adapt more easily to changes in the health care infrastructure (such as new services, organizations, and provider types) and information technology.

Some of the recommended code sets lack a desirable level of flexibility; e.g., they use hierarchical codes and may therefore ''run out of room'' for additional codes required by advances in medicine and health care. Since they appear to be the only feasible alternatives for the year 2000, steps should be taken to improve their flexibility—or replace them with more flexible options—sometime after the year 2000.

iv. Probable Changes to Coding and Classification Standards After 2000

Although the exact timing and precise nature of changes in the code sets designated as standards for medical data are not yet known, it is inevitable that there will be changes to coding and classification standards after the year 2000. As indicated in testimony at the NCVHS hearings previously discussed, changes will be required to address current coding system deficiencies that adversely affect the efficiency and quality of administrative data creation and to meet international treaty obligations. For example, ICD–10–CM for diagnosis is highly likely to replace ICD–9–CM as the standard for diagnosis data, possibly in 2001. When any of the standard code sets proposed in this rule are replaced by wholly new or substantially revised systems, the new standards may have different code lengths and formats. The current draft of ICD–10–CM for diagnoses contains 6 digit codes; the longest ICD–9–CM codes have 5 digits. In addition to accommodating the initial code sets standards for the year 2000, those that produce and process electronic administrative health transactions should build the system flexibility that will allow them to implement different code formats beyond the year 2000.

As also clearly expressed in the hearings and other input to HHS, any major change in administrative coding systems involves significant initial costs and dislocations, as well as some level of discontinuity in data collected before and after the change. These factors must be weighed against expected improvements in the efficiency of data creation and in the accuracy and utility of the data collected. In the future, more flexible health data systems may assist in reducing the costs of implementing changes in administrative coding and classification standards, especially if administrative codes can be generated automatically from more granular clinical data.

b. Requirements

In § 142.1002, we would state that health plans, health care clearinghouses, and health care providers must use in electronic transactions the diagnosis and procedure code sets as prescribed by HHS. The names of these diagnosis and procedure code sets are published in a notice in the **Federal Register**. The implementation guides for the transaction standards in part 142, Subparts K through R would specify which of the standard medical data code sets should be used in individual data elements within those transaction standards.

In § 142.1004, we would specify that the code sets in the implementation guide for each transaction standard in part 142, subparts K through R, are the standard for the coded nonmedical data elements present in that transaction standard.

In § 142.1010, The requirements sections of part 142, subparts K through R, would specify that those who transmit electronic transactions covered by the transaction standards must use the appropriate transaction standard, including the code sets that are required by that standard. These sections would further specify that those who receive electronic transactions covered by the transaction standards must be able to receive and process all standard codes, without regard to local policies regarding reimbursement for certain conditions or procedures, coverage policies, or need for certain types of information that are not part of a standard transaction.

E. Transaction Standards

The HISB prepared an inventory of candidate standards to be considered by HHS in the standards adoption process. HHS wrote letters to the NUBC, the NUCC, the ADA, and WEDI in order to consult with them as required by the Act. HHS also consulted with them informally and received their support on all the transactions at various meetings and at the public meeting we held on July 9, 1997, in Bethesda, Maryland. The NCVHS held public hearings during which any person could present his or her views. There also were opportunities for those who could not attend the public hearings to provide written advice, and many did take advantage of that opportunity. In addition, HHS welcomed informal advice from any industry member, and that advice was taken into consideration during the decision making process.

Recommendations for enrollment and disenrollment in a health plan, eligibility for a health plan, health care payment and remittance advice, health plan premium payments, first report of injury, health claim status, and referral certification and authorization were overwhelmingly in favor of ASC X12N implementations. Also, the recommendation for the National Council of Prescription Drug Programs (NCPDP) version 3.2 telecommunication standard format was not controversial and was nearly unopposed.

The recommendations for the professional and institutional claims were quite controversial, with some factions supporting the *de facto* flat file standards that have been in use for many years and others supporting X12N standards.

(A flat file is a file that has fixed-length records and fixed-length fields.) Some associations proposed dual standards with the flat file claim standards (National Standard Format for professional claims and electronic UB–92 for institutional claims) to sunset on a specified date, at which time the parallel ASC X12N claim implementations would become the sole standards to be used.

The HHS claims implementation team recommended, and we are proposing for adoption, the following standards as implemented through the appropriate implementation guides, data content and data conditions specifications, and data dictionary:

- Health care claim and equivalent encounter:
  + Retail drug: NCPDP Telecommunication Claim version 3.2 or equivalent NCPDP Batch Standard Version 1.0.
  + Dental claim: ASC X12N 837—Health Care Claim: Dental.
  + Professional claim: ASC X12N 837—Health Care Claim: Professional.
  + Institutional claim: ASC X12N 837—Health Care Claim: Institutional.
- Health care payment and remittance advice: ASC X12N 835—Health Care Payment/Advice.
- Coordination of benefits:
  + Retail drug: NCPDP Telecommunication Standard Format version 3.2 or equivalent NCPDP Batch Standard Version 1.0.
  + Dental claim: ASC X12N 837—Health Care Claim: Dental.
  + Professional claim: ASC X12N 837—Health Care Claim: Professional.
  + Institutional claim: ASC X12N 837—Health Care Claim: Institutional.
- Health claim status: ASC X12N 276/277—Health Care Claim Status Request and Response.
- Enrollment and disenrollment in a health plan: ASC X12 834—Benefit Enrollment and Maintenance.
- Eligibility for a health plan: ASC X12N 270/271—Health Care Eligibility Benefit Inquiry and Response.
- Health plan premium payments: ASC X12 820—Payment Order/Remittance Advice.
- Referral certification and authorization: ASC X12N 278—Health Care Services Review—Request for Review and Response.

We chose version 4010 of X12 for each ASC X12N transaction. Later in this proposed rule is a list of candidates for most transactions. The ASC X12N transactions listed as candidate standards in this section were originally specified as version 3070 because at the time of HISB inventory version 3070 was the most current DSTU version. However, we are proposing that version 4010 would be proposed in lieu of version 3070 for the following reasons:

- Version 4010 is millennium ready.
- Version 4010 allows for up-to-date changes to be incorporated into the standards.

We will propose a claims attachment standard in a separate document as the statute gives the Secretary an additional year to designate this standard. The attachment standards are likely to be drafted so that health care providers using Health Level 7 (HL7) for their in-house clinical systems would be able to send HL7 clinical data to health plans. Anyone wishing to use the HL7 may want to consider a translator that supports the administrative transactions proposed in this proposed rule and the HL7.

We will also propose a standard for first report of injury transactions in a later rule for reasons explained in depth under section II.E.9.

1. Standard: Health Claims or Equivalent Encounter Information (Subpart K)

[Please label any written comments or e-mailed comments about this section with the subject: Health Claims]

a. Background

By the mid-1970s, several health care industry associations had formed committees to attempt to standardize paper health care claim or equivalent encounter forms. By the mid-1980s, those committees were standardizing electronic formats with equivalent data. By the early 1990s, some of these committees were working with the ASC X12N Subcommittee. Nevertheless, many health plans continued to require local formats, revising the formats to suit their own purposes rather than following procedures in order to revise the standards. As a result, it is not unusual for health care providers to support many electronic health care claim formats, either directly or by using clearinghouse services, in order to do business with the many health plans covering their patients.

The committees that pursued organizational goals (such as a more cost-efficient environment for the provision of health care, more time and resources for patient care, and fewer resources for administration) were usually sponsored by health care provider associations such as the National Council of Prescription Drug Programs, the AMA, the American Hospital Association, and the ADA. Each association contributed to the development of the four corresponding accredited claims standards proposed for adoption, with content based on de facto standards derived over time.

i. Candidates for the Standard

The HISB developed an inventory of health care information standards for HHS to consider for adoption. The candidate standards for health claims or equivalent encounter information were:

- Retail drug: NCPDP Telecommunications Standard Format Version 3.2.
- Dental claim: ASC X12N 837—health care claim: dental, version 3070 implementation.
- Professional claim: ASC X12N 837—health care claim: Professional, version 3070 implementation and HCFA National Standard Format (NSF), version 002.00.
  + Institutional claim: ASC X12N 837—health care claim: institutional, version 3070 implementation and HCFA Uniform Bill (UB–92) version 4.1

ii. Recommended Standards

The four standards for claims or equivalent encounter information we are proposing in this proposed rule are:

- Retail drug: NCPDP Telecommunications Standard Format Version 3.2 and equivalent NCPDP Batch Standard Version 1.0.

The NCPDP was formed in 1977 as the result of a Senate Ad Hoc Committee to study standardization within the pharmacy industry. The NCPDP was specifically named in HIPAA as a standards setting organization accredited by ANSI. The first NCPDP Telecommunications Standard was developed in 1988 and allowed pharmacists to process claims in an interactive environment. The NCPDP developed the Telecommunications Standard Format for electronic communication of claims between pharmacy providers, insurance carriers, third-party administrators, and other responsible parties. The standard addresses the data format and content, the transmission protocol, and other appropriate telecommunications requirements. The NCPDP received input from all aspects of the prescription drug industry and designed the standard to be easy to implement and flexible enough to respond to the changing needs of the industry. The NCPDP also provides changes and additions to the standard to support unique requirements included in government mandates.

The NCPDP telecommunications standard for claim and equivalent encounter data is on-line interactive. There is also a batch implementation of this standard, the NCPDP Batch Standard Version 1.0. The

telecommunications standard data set includes eligibility/enrollment, claim, and remittance advice information. When the transaction is complete, the sending pharmacy knows whether the customer is covered by the health plan, the health plan knows all of the details of the claim, the pharmacy knows whether the claim will be paid, and how much it will be paid, and any pertinent details regarding the amount of payment or the reason for denial of payment. This standard met all 10 of the criteria used to assess standards.

Since retail drug claims are a specialized class and the NCPDP structure contains claims, enrollment/eligibility and remittance advice data, we did not recommend the ASC X12N 837 for the retail drug standard.

• Dental claim: ASC X12N 837—Health Care Claim: Dental.

The ADA recommended adoption of the ASC X12N 837, version 3070. This standard met all of the criteria used to assess standards.

Professional claim: ASC X12N 837—Health Care Claim: Professional.

HHS consulted with external groups in accordance with the legislation. These groups included the NCVHS, WEDI, the NUCC, the NUBC, the ADA, and many others.

In a letter, dated March 12, 1997, the NUCC stated,

> The NUCC recommends to the Secretary of HHS that the ANSI ASC X12 837 transaction be adopted as a standard for electronically transmitting professional claims or equivalent encounters, including coordination of benefits information, as per the Administrative Simplification provision of the HIPAA.
>
> The NUCC recommends that a migration plan be adopted to allow current trading partners who use the National Standard format (NSF) to convert to a standard NSF, which will be implemented by the Secretary per the HIPAA, by February 2000 and to convert to the standard ANSI ASC X12 837 by February 2003.

The AMA also supported the NUCC recommendation. However, the NCVHS and WEDI recommended adoption of the ASC X12N 837 transaction. The claims implementation team decided that, since the NUCC was clear that it wanted the ASC X12N 837 transaction in the end, it would be better to invest in migrating to that, rather than support two standards and take more time for the transition.

Our recommendation takes into account the advice we received from organizations that we consulted directly and indirectly and from those who testified before the NCVHS subcommittee on Health Data Needs, Standards, and Security. These organizations included entities representing all parts of the health care industry—health care providers, health plans, and vendors/clearinghouses—to which the standard will apply.

The ASC X12N 837 standard met all 10 criteria used to assess standards. The NSF met 5 of the criteria. The NSF does not improve the efficiency and effectiveness of the health care system (#1) because a standard implementation does not exist. The NSF meets the needs of many users, particularly Medicare, but not all of the needs of the user community (#2). It is not supported by an ANSI-accredited SDO (#5). There are no testing or implementation procedures in place (#6). Due to its fixed-length structure, it does not incorporate flexibility to adapt easily to change (#10).

Institutional claim: ASC X12N 837—Health Care Claim—Institutional.

HHS consulted with the groups identified under our discussion of the standard for professional claims above in this section and also consulted with the NUBC on the selection of an institutional standard. In a letter dated March 11, 1997, the NUBC stated,

> The NUBC recommends the use of the EMC V.4 (UB–92) as the single electronic standards transaction for institutional health claims and encounters. We recommend the EMC V.4 for the following reasons:
>
> —Nearly all institutional providers already use the EMC V.4 with a high level of success.
>
> —The EMC V.4 has been in full production for over four years.
>
> —There is no additional cost for providers to adopt the EMC V.4.
>
> —It reduces the risks associated with the adoption of a new, complex and relatively untested transaction.
>
> —It allows for a more successful transition to the 837.
>
> We agree with HCFA that coordination of benefits transactions (COB) do not require a fully separate transaction for the health care claim or encounter. The NUBC also believes that the EMC V.4 should be used as the platform for transmitting COB data elements.
>
> At the present time, the NUBC cannot recommend the use of the 837 as the electronic institutional claim standard.
>
> We recommend that larger scale testing of the 837 proceed. Once the transaction has proven that it can successfully handle the claim/encounter, the NUBC will consider endorsing the 837 as a successor standard.

The American Hospital Association also supported NUBC's recommendation. The NCVHS and WEDI recommended adoption of the ASC X12N 837 transaction.

Due to the batch nature of the ASC X12N transactions, each transaction type and its corresponding data elements are separated by function. The adoption of the transactions for those functions (such as claims and remittance advice), with the exception of the NCPDP transaction, have all been recommended to be ASC X12N transactions. The ASC X12N 837 met all 10 criteria used to assess the standards. The UB–92 met 5 of the criteria. The UB92 does not improve the efficiency and effectiveness of the health care system (#1) because a standard implementation does not exist. The UB92 is not supported by an ANSI-accredited SDO (#5). There are no testing or implementation procedures in place (#6). The UB92 documentation is ambiguous in some instances and not always precise (#8). Due to its fixed-length structure, it does not incorporate flexibility to adopt easily to change (#10). The NUBC stated it would consider the 837, once successfully tested. For these reasons, we have concluded that the ASC X12N 837 should be adopted as the standard format implementation of the institutional claim.

For the most part, a health care provider would use only one of these four health care claim implementations, although a large institution might use the institutional claim for inpatient and outpatient claims, the professional claim for staff physicians who see private patients within the institution, and the retail pharmacy claim, if applicable, which typically would be administered separately from the rest of the institution.

Data elements for the various standards and other information may be found in Addendum 1.

b. Requirements

In § 142.1102, we would specify the exact standards we are adopting: the NCPDP Telecommunications Standard Format Version 3.2 and equivalent NCPDP Batch Standard Version 1.0; the ASC X12N 837—Health Care Claim: Dental, the ASC X12N 837—Health Care Claim: Professional, and the ASC X12N 837—Health Care Claim: Institutional. We would specify where to find the implementation guide and incorporate it by reference.

i. Health plans.

In § 142.1104, Requirements: Health plans, we would require health plans to accept only the standards specified in § 142.1102 for electronic health claims or equivalent encounter information.

ii. Health care clearinghouses.

We would require in § 142.1106 that each health care clearinghouse use the standard specified in § 142.1102 for health claims or equivalent encounter information transactions.

iii. Health care providers.

In § 142.1108, Requirements: Health care providers, we would require each health care provider that transmits health claims and encounter equivalent electronically to use the standard specified in § 142.1102.

c. Implementation Guide and Source

The source of implementation guides for the NCPDP telecommunication claim version 3.2 and equivalent NCPDP Batch Standard Version 1.0 is the National Council for Prescription Drug Programs, 4201 North 24th Street, Suite 365, Phoenix, AZ, 85016; telephone 602–957–9105; FAX 602–955–0749. The web site address is: http://www.ncpdp.org.

NCPDP standards are available to the public on a 3½'' diskette for a fee. A set is defined as containing the Telecommunications Standard, Standard Claims Billing Tape Format, Eligibility Verification and Response, and Enrollment. Membership in the NCPDP is not a requirement for obtaining the standards and associated implementation guides. The website contains information and instructions for obtaining these documents.

The implementation guides for the ASC X12N standards are available at no cost from the Washington Publishing Company site at the following Internet address: http://www.wpc-edi.com/hipaa/.

Users without access to the Internet may purchase implementation guides from Washington Publishing Company directly: Washington Publishing Company, 806 W. Diamond Ave., Suite 400, Gaithersburg, MD, 20878; telephone 301–590–9337; FAX: 301–869–9460. The data definitions and description of data conditions may also be obtained from this website.

The names of the implementation guides are:

ASC X12N 837—Health Care Claim: Professional (004010X098)
ASC X12N 837—Health Care Claim: Institutional (004010X096)
ASC X12N 837—Health Care Claim: Dental (004010X097)

2. Standard: Health Care Payment and Remittance Advice (Subpart L)

[Please label any written comments or e-mailed comments about this section with the subject: Payment]

a. Background

The filing of claims for reimbursement (especially when a large number of patients have more than one insurer), control of those claims, association of payments, denials or rejections received with the patient records, posting of adjudication data to those records, reconciliation of payments sent to financial institutions, and storage and retrieval of patient accounts is a very labor intensive process when conducted manually. The process is further complicated by the diverse requirements and processes for activities such as billing, payment, and notification of the large number of health plans, which requires that health care provider staff stock multiple types of forms, be trained in the variety of requirements, be able to interpret the wide range of coding schemes used by each health plan, and maintain billing and payment manuals for each health plan.

We believe that automation can greatly reduce the labor required for these processes, especially if every health plan becomes automated around a standard model so that health care providers are not required to deal with different requirements and software. Automation of the payment and remittance advice process can provide many benefits: health care providers can post claim decisions and payments to accounts without manual intervention, eliminating the need for re-keying data; payments can be automatically reconciled with patient accounts; and resources are freed to address patient care rather than paper and electronic administrative work.

The ASC X12N Subcommittee established a workgroup in late 1991 to develop the ASC X12N 835—Health Care Claim Payment/Advice, since there was no existing standard capable of handling the large datasets necessary for health care.

i. Candidates for the Standards

Prior to development of the ASC X12N 835, there were very few electronic formats available for the health care claim payment and remittance advice function. As researched by the HISB, existing standards that could be considered for national implementation under HIPAA for health care claim payment/remittance advice included:

ASC X12N 835—Health Care Claim Payment/Advice, version 3070; ASC X12N 820 Payment Order/Remittance Advice; and the National Standard Format (NSF) for Remittance Version 2.0

ii. Recommended Standard

The standard for remittance advice proposed in this proposed rule is the ASC X12N 835 Health Care Claim Payment/Advice.

HHS chose this standard primarily because of advice received from industry members. Health care providers and health plans in the ASC X12N Subcommittee rejected the ASC X12N 820 due to its lack of health care specific information for this function. The X12N 820 is used for electronic payment of health insurance premiums by employers. Although the NSF is used by a large number of Medicare providers, we rejected it because it is not an ANSI-accredited standard and it lacks an independent, nongovernmental body for maintenance.

The ASC X12N 835 may be used in conjunction with payment systems relying either on electronic funds transfer or the creation of paper checks. It may be sent through the banking system or it may be split with the electronic funds transfer portion directed to a bank, and the data portion sent either directly or through a health care clearinghouse to the individual for whom the funds are intended. If paper checks are used, the entire transaction is sent either directly or through a health care clearinghouse to the individual for whom the funds are intended. In all cases, however, the health care provider may use the electronic data in its own system, gaining efficiency by means of automatic posting of patient accounts. Uniformity is just as important as it is for health care claims, since there would be little gain in efficiency for the health care provider who must adapt to multiple formats and multiple data contents for remittance advice. This transaction is suitable for use only in batch mode.

HHS, based on recommendations, has determined that the ASC X12N 835—Health Care Claim Payment/Advice is the best candidate for adoption under HIPAA. A wide range of the health care community participated in its initial design, and the ASC X12N is ANSI-accredited. Whereas the NSF met 5 of the criteria against which we evaluated the standards, the ASC X12N standards met all 10. The NSF does not improve the efficiency and effectiveness of the health care system (#1) because a standard implementation does not exist. The NSF was developed primarily for Medicare and, therefore, does not meet all of the needs of the user community (#2). It is not supported by an ANSI-accredited SDO (#5). There are no testing or implementation procedures in place (#6). Due to its fixed-length structure, it does not incorporate flexibility to adapt easily to change (#10).

Data elements for the standard and other information may be found in Addendum 2.

b. Requirements

In § 142.1202, we would specify the ASC X12N 835 Health Care Claim Payment/Advice (004010X091) as the standard for payment and remittance advice transactions. We would also specify the source of the implementation guide and incorporate it by reference.

i. Health plans.

In § 142.1204, Requirements: Health plans, we would require health plans to use only the standard specified in § 142.1202 for electronically transmitting payment and remittance advice transactions.

ii. Health care clearinghouses.

We would require in § 142.1206 that each health care clearinghouse use the standard specified in § 142.1202 for payment and remittance advice transactions.

c. Implementation Guide and Source

The implementation guide for the ASC X12N 835 (004010X091) is available at no cost from the Washington Publishing Company site at the following Internet address: http://www.wpc-edi.com/hipaa/.

Users without access to the Internet may purchase implementation guides from Washington Publishing Company directly: Washington Publishing Company, 806 W. Diamond Ave., Suite 400, Gaithersburg, MD 20878; telephone 301–590–9337; FAX: 301–869–9460. The data definitions and description of data conditions may also be obtained from this website.

3. Standard: Coordination of Benefits (Subpart M)

[Please label any written comments or e-mailed comments about this section with the subject: COB]

a. Background

In an effort to provide better service to their customers, many health plans have made arrangements with each other to send claims electronically in the order of payment precedence, thus saving the customer the process of waiting for another health plan's notice. Each health plan in the chain wishes to see the original claim as well as the details of its adjudication by prior health plans that dealt with it. We believe that there should be a coordination of benefits standard to facilitate the interchange of this information between health plans.

Adoption of a standard for electronic transmission of standard data elements among health plans for coordination of benefits and sequential processing of claims would serve these goals expressed by the Congress. Currently, the coordination of benefits for patients covered by multiple health plans is a burdensome chore. The COB transaction differs somewhat from the others because there are two models in existence for conducting it. The first model is provider-to-plan, where the provider submits the claim to the primary insurer, receives payment, and resubmits the claim (with the remittance advice from the primary insurer) to the secondary insurer. The second model is plan-to-plan, where the provider supplies the primary insurer with information needed for the primary insurer to then submit the claim directly to the secondary insurer. The choice of model has been made between the providers and plans. Where the first model is used, the primary insurer essentially has no role in the COB transaction. Put another way, in the first model there is no separate COB transaction. Instead, the COB function is accomplished by a health care provider submitting a series of individual claims. This succession of transactions from health care provider to primary health plan to health care provider to secondary health plan, which often involves the production, reproduction, and mailing of paper forms and multiple claim formats, is time consuming and administratively costly. In some instances, it becomes even more burdensome when the provider shifts responsibility for these administrative tasks to the patient. Health plans have been unwilling to take on the full responsibility for coordinating benefits because of the many different forms and formats used for these transactions.

Administrative simplification and electronic standards can simplify and smooth this onerous process. The four products of administrative simplification—(1) The uniform standards for electronic claims submissions; (2) an electronic transmission standard for coordination of benefits; (3) a uniform national standard for the data elements necessary for coordination of benefits among health plans; and (4) uniform health plan and provider identification numbers to efficiently route electronic transactions—would combine to remove the barriers that health plans currently face in carrying out transactions. These products would facilitate the process of the second model, direct health plan to health plan coordination of benefits. Once these standards are implemented, coordination of benefits could be completed without provider or patient intervention and at a lower cost to all parties than under current practice.

Primary insurers are not required to participate in COB transactions as described in the second model. If, however, a plan does conduct COB through the second model, then it would be required to use the standard format. Primary insurers may determine whether they wish to participate in COB transactions (i.e., use the second model) based on their normal business practices. Where primary insurers do perform COB (using the second model) they must conduct the transaction electronically as standard transactions.

The ASC X12N 837 Health Care Claim (refer to E.1. above) is designed to facilitate coordination of benefits. Each health plan responsible for the claim passes the claim on to the next health plan responsible for the claim. This transaction describes the original claim and how previous health plans adjudicated the claim. In October 1994, the ASC X12N Subcommittee modified the ASC X12N 837 Health Care Claim to fully support coordination of benefits.

i. Candidates for the Standard

a. Retail drug: NCPDP Telecommunications Standard Format version 3.2.

b. Dental claim: ASC X12N 837—Health Care Claim: Dental, version 3070.

c. Professional claim: ASC X12N 837—Health Care Claim: Professional, version 3070.

d. Institutional claim: ASC X12N 837—Health Care Claim: Institutional, version 3070; and the Uniform Bill (UB–92) version 4.1.

ii. Recommended Standard

The standards for the coordination of benefits exchange we are proposing are:

a. Retail drug: NCPDP Telecommunications Standard Format version 3.2 and the equivalent NCPDP Batch Standard Version 1.0.

b. Dental claim: ASC X12N 837—Health Care Claim: Dental (004010X097).

c. Professional claim: ASC X12N 837—Health Care Claim: Professional (004010X098).

d. Institutional claim: ASC X12N 837—Health Care Claim: Institutional (004010X096).

Since all recommended transactions for claims or equivalent encounters and the remittance advice are ASC X12N, with the exception of the NCPDP, it was determined that this transaction was the best candidate for national implementation, as it will increase the synergistic effect of the other ASC X12N standards.

All health plans who perform COB, using the second model described above, would have to send and receive these standards for coordination of benefits. The data elements added to

explain the prior payments on the claim are shown in the implementation guide, data conditions, and data dictionary. This transaction accommodates coordination of benefits through the tertiary health plan. The NCPDP telecommunication claim version 3.2 is interactive. The three X12 standards are designed for use only in batch mode.

HHS chose these standards primarily because of advice received from industry members.

Data elements for the various standards and other information may be found in Addendum 3.

b. Requirements

In § 142.1302, we would specify the following as the standards for coordination of benefits: the NCPDP Telecommunications Standard Format Version 3.2 and equivalent NCPDP Batch Standard Version 1.0; the ASC X12N 837—Health Care Claim: Dental (004010X097); the ASC X12N 837—Health Care Claim: Professional (004010X098); and the ASC X12N 837—Health Care Claim—Institutional (004010X096). We would specify where to find the implementation guide and incorporate it by reference.

i. Health plans.

In § 142.1304, Requirements: Health plans, we would require health plans who perform COB to use only the standards specified in § 142.1302 for electronic coordination of benefits transactions.

ii. Health care clearinghouses.

We would require in § 142.1306 that each health care clearinghouse use the standards specified in § 142.1302 for coordination of benefits.

c. Implementation Guide and Source

The source of implementation guides for the NCPDP telecommunication claim version 3.2 and equivalent Standard Claims Billing Tape Format is the National Council for Prescription Drug Programs, 4201 North 24th Street, Suite 365, Phoenix, AZ, 85016; Telephone 602–957–9105, FAX 602–955–0749. The web site address is: http://www.ncpdp.org. NCPDP standards are available to the public on a 3½″ diskette. A set is defined as containing the Telecommunications Standard, Standard Claims Billing Tape Format, Eligibility Verification and Response, and Enrollment. Membership in the NCPDP is not a requirement for obtaining the standards and associated implementation guides. The website contains information and instructions for obtaining these formats.

The implementation guides for the three ASC X12N health care claim standard implementations are available at no cost from the Washington Publishing Company site at the following Internet address: http://www.wpc-edi.com/hipaa/. The data definitions and description of data conditions may also be obtained from this website.

Users without access to the Internet may purchase implementation guides from Washington Publishing Company directly. Washington Publishing Company, 806 W. Diamond Ave., Suite 400, Gaithersburg, MD, 20878; Telephone 301–590–9337; FAX: 301–869–9460.

The names of the implementation guides are:

ASC X12N 837—Health Care Claim: Professional (004010X098)

ASC X12N 837—Health Care Claim: Institutional (004010X096)

ASC X12N 837—Health Care Claim: Dental (004010X097)

4. Standard: Health Claim Status (Subpart N)

[Please label any written comments or e-mailed comments about this section with the subject: Status]

a. Background

Health care providers need the ability to obtain up to date information on the status of claims submitted to health plans for payment, and the health plans need a mechanism to respond to these requests for information. The current processes are complicated by the diverse processes within health plan adjudication systems, which permit nonstandard information to be provided on the status of claims submitted. Most health care providers currently request claims status information manually. This requires health plans to provide information through various procedures that are costly and time consuming for all.

With the paper model of claims processing, inquirers who want to know the status of a claim they have submitted to a health plan call the health plan. An operator looks up the status via computer terminal or some other means and explains the status to the caller. The health claim status tells the inquirer whether the claim has been received, whether it has been paid, or whether it is stopped in the system because of edit failures, suspense for medical review or some other reason.

Many health plans have devised their own electronic claims status transactions since this is a function that is cheaper, easier, and faster to do electronically. This transaction eases administrative burden for both health plan and health care provider.

The ASC X12N Subcommittee established a workgroup (Workgroup 5 Claims Status) to develop a standard implementation with standard data content for all users of the ASC X12N 276/277 Health Care Claim Status Request and Response (004010X093).

The ASC X12N 276 is used to transmit request(s) for status of specific health care claim(s). Authorized entities involved with processing the claim need to track the claim's current status through the adjudication process. The purpose of generating an ASC X12N 276 is to obtain the current status of the claim. Status information can be requested at various levels. The first level would be for the entire claim. A second level of inquiry would be at the service line level to obtain status of a specific service within the claim.

The ASC X12N 277 Health Care Claim Status Response is used by the health plan to transmit the current status within the adjudication process. This can include status in various locations within the adjudication process, such as pre-adjudication (accepted/rejected claim status), claim pending development, suspended claim(s) information, and finalized claims status.

Prior to the development of the ASC X12N 276/277 Health Care Claim Status Request and Response, there were very few proprietary or other electronic formats available for this type of claims status, and none were in widespread use. No existing standard was accepted for national use by the health care community. As researched by the HISB, only one standard could be considered for national implementation under HIPAA for health care claim status request and response: the ASC X12N 276/277 Health Care Claim Status Request and Response, version 3070.

i. Candidates for the Standard

The candidate standard for health care claim status is:

ASC X12N 276/277 Health Care Claim Status Request and Response, version 3070.

ii. Standard Selected

We propose to adopt ASC X12N 276/277 Health Care Claim Status Request and Response (004010X093), as the national standard for uniform use by health plans and health care providers for health care claims status.

HHS chose this standard primarily because of advice received from industry members. It met all 10 of the criteria used for assessing standards.

Data elements for the standard, and other information, may be found in Addendum 4.

b. Requirements

In § 142.1402, we would specify the following as the standard for health care claims status: ASC X12N 276/277 Health Care Claim Status Request and Response (004010X093). We would specify where to find the implementation guide and incorporate it by reference.

i. Health plans.

In § 142.1404, Requirements: Health plans, we would require health plans to use only the standards specified in § 142.1402 for electronic health care claims status transactions.

ii. Health care clearinghouses.

We would require in § 142.1406 that each health care clearinghouse use the standards specified in § 142.1402 for health care claims status.

iii. Health care providers.

In § 142.1408, Requirements: Health care providers, we would require each health care provider that transmits health care claim status requests electronically to use standards specified in § 142.1402 for those transactions.

c. Implementation Guide and Source

The implementation guide for the standard is available at no cost from the Washington Publishing Company site at the following Internet address: http://www.wpc-edi.com/hipaa/. The data definitions and description of data conditions may also be obtained from this website.

Users without access to the Internet may purchase implementation guides from Washington Publishing Company directly: Washington Publishing Company, 806 W. Diamond Ave., Suite 400, Gaithersburg, MD, 20878; telephone 301–590–9337; FAX: 301–869-9460.

5. Standard: Enrollment and Disenrollment in a Health Plan (Subpart O)

[Please label any written comments or e-mailed comments about this section with the subject: Enrollment]

a. Background

Currently, employers and other sponsors conduct transactions with health plans to enroll and disenroll subscribers and other individuals in a health insurance plan. The transactions are rarely done electronically.

However, the ASC X12 834, Benefit Enrollment and Maintenance has been in widespread use within the insurance industry at large since February 1992 when ANSI approved it as a draft standard for trial use. Variants of this transaction standard have been widely used by employers to advise insurance companies of enrollment and maintenance information on their employees for insurance products other than health. It has rarely been used within the health care industry.

i. Candidates for the Standard.

According to the inventory conducted for HHS by the HISB, only two standards developed and maintained by a standards developing organization for the enrollment transaction exist. The first is the ANSI ASC X12 834. The second is the Member Enrollment Standard developed by the NCPDP.

ii. Recommended Standard.

The ANSI ASC X12 834—Benefit Enrollment and Maintenance is the standard proposed for electronic exchange of individual, subscriber, and dependent enrollment and maintenance information between sponsors and health plans, either directly or through a vendor, such as a health care clearinghouse. In some instances, this transaction may be used also to exchange enrollment and maintenance information between sponsors and health care providers or between health plans and health care providers.

The NCPDP standard, which was developed to enhance the enrollment verification process for pharmaceutical claims, rather than for transmitting information between health plan and sponsor, is not being proposed for adoption in this rule. The NCPDP standard pertains to these specific uses and is therefore not suitable in its current form for the more general uses needed for the enrollment transaction.

With the implementation of the ASC X12 834 for health care, sponsors would be able to transmit information on enrollment and maintenance using a single, electronic format; health plans would be required to accept only the standard transaction; neither sponsors nor health plans would have to continue to maintain and use multiple proprietary formats or resort to paper.

Adoption of this standard would benefit sponsors, especially, by providing them the ability to convert to electronic transmission formats where paper is still being used today. Many of these sponsors already use X12 standards in their core business activities (for example, purchasing) unrelated to the provision of health care benefits to employees. The utility of this particular standard for health care transactions would be synergistic when considered in combination with the other standards in this proposed rule (for example, ASC X12 820) and other rules (PAYERID, national provider identifier) promulgated under HIPAA.

In addition to being the only relevant standard for the enrollment and maintenance process designed for use by sponsors, the ANSI ASC X12 834 met all of the 10 criteria deemed to be applicable in evaluating this potential standard.

1. It will improve the efficiency of enrollment transactions by prescribing a single, standard format.

2. It was designed to meet the needs of health care providers, health plans, and health care clearinghouses by virtue of its development within the ASC X12 consensus process, in which representatives of health care providers, health plans, and health care clearinghouses participate.

3. It is consistent with the other X12 standards detailed in this proposed rule.

4. Its development costs are relatively low, given the ASC X12 development process; its implementation costs would be relatively low as it can be implemented along with a suite of X12 transaction sets, often with a single translator.

5. It was developed and will be maintained by the ANSI-accredited standards setting organization ASC X12.

6. It is ready for implementation, with the official implementation guide to which we refer in Addendum G to this proposed rule.

7. It was designed to be technology neutral by ASC X12.

8. Precise and unambiguous definitions for each data element in the transaction set are documented in the implementation guides.

9. The transaction is designed to keep data collection requirements as low as is feasible.

10. All X12 transactions, including the X12 834, are designed to make it easy to accommodate constantly changing business requirements through flexible data architecture and coding systems.

iii. Uses of the ANSI ASC X12 834.

Transaction data elements in the implementation guide for the ASC X12 834 are defined as either required or conditional, where the conditions are clearly stated. This transaction would be used to enroll and disenroll not only the subscriber, but also any covered dependents. In some instances, this would be an enhancement to enrollment information maintained by sponsors or health plans, compared with the common practice today of maintaining detailed records on the subscriber alone. In an increasingly value-conscious health care environment, detailed information on subscribers and covered dependents is necessary for the effective management of their health care utilization.

Administrative and financial health care transactions such as the ASC X12 834 enrollment transaction may have

other, secondary uses that may be important to consider as well. For example, secondary uses of health care claims data are common and include analyses of health care utilization, quality, and cost. The ASC X12 834 enrollment transaction has been discussed (for example, by the NCVHS) as a means to collect demographic information on individuals for use by public health, State data organizations, and researchers. Typically, demographic data elements would be used in combination with information obtained from other health care transactions, such as health care claims and equivalent encounter transactions, and from other sources.

Proponents of this approach and these uses have expressed their beliefs that the enrollment transaction includes patient demographic data elements and that this would provide more reliable data on patient demographics than are available currently from health care claims and encounter databases. Proponents also believe that the availability of demographic information is in jeopardy because the X12 837 health care claim transaction proposed elsewhere in this rule includes minimal patient demographic data elements. The use of this standard would be a change from current practice in many States where the health care claim is the vehicle for collecting such information. Some proponents also have indicated a desire to expand the number of demographic data elements contained in the ASC X12 834 enrollment transaction to serve these secondary uses.

Opponents of this approach argue that the ASC X12 834 enrollment transaction is not a suitable vehicle for collecting demographic information for these secondary purposes. They also assert that such information would never be available on the uninsured and, since there is no obligation on the part of sponsors to adopt the electronic transactions, would be only intermittently available on the insured. They also state that, although some demographic elements are already contained in the ASC X12 834 enrollment transaction, no business need has been identified that would support the addition of other such data elements. Finally, the opponents argue that secondary uses, while legitimate, should not be allowed to subvert the primary purposes of these transactions nor the goal of administrative simplification.

We welcome comments on the practical utility of the ASC X12 834 enrollment transaction as a vehicle for collecting demographic information on individuals and its value as an adjunct to claims and encounter data in this regard.

The data elements for this transaction, and other information, may be found in Addendum 5.

b. Requirement

In § 142.1502, we would specify the ASC X12 834 Benefit Enrollment and Maintenance (004010X095) as the standard for enrollment and disenrollment transactions. We would also specify the source of the implementation guide and incorporate it by reference.

i. Health plans.

In § 142.1504, Requirements: Health plans, we would require health plans to use only the standard specified in § 142.1502 for electronic enrollment and disenrollment transactions.

ii. Health care clearinghouses.

We would require in § 142.1506 that each health care clearinghouse use the standard specified in § 142.1502 for enrollment and disenrollment transactions.

iii. Sponsors.

There would be no requirement for sponsors to use the standard: they are not one of the entities subject to the requirements of HIPAA. However, to the extent a sponsor uses an electronic standard, it would benefit that sponsor to use the standard we adopt for the reasons discussed earlier. In addition, HIPAA contains no provisions that would prohibit a health plan requiring sponsors with which its conducts transactions electronically to use the adopted standard.

c. Implementation Guide and Source

The implementation guide for the ASC X12N 834 (004010X095) is available at no cost from the Washington Publishing Company site on the World Wide Web at the following address: http://www.wpc-edi.com/hipaa/. The data definitions and description of data conditions may also be obtained from this website.

Users without access to the Internet may purchase implementation guides from Washington Publishing Company directly. Washington Publishing Company, 806 W. Diamond Ave., Suite 400, Gaithersburg, MD, 20878; telephone 301–590–9337; FAX: 301–869–9460.

6. Standard: Eligibility for a Health Plan (Subpart P)

[Please label any written comments or e-mailed comments about this section with the subject: Eligibility]

a. Background

Often, health care providers may need to verify not only that a patient has health insurance coverage but also what specific benefits are included in that coverage. Having such information helps the health care provider to collect correct patient deductibles, co-insurance amounts, and co-payments and to provide an accurate bill for the patient and all pertinent health plans, including secondary payers.

In addition, simple economics dictates that the out-of-pocket cost to the patient may affect treatment choices. The best case is when there are two equally effective treatment options and coverage is only available for one. More often, the question may be whether a particular treatment is covered or not. Here is an example: Jane Doe has cancer and a bone marrow transplant is the treatment of last resort. Since insurance coverage does not extend to ''experimental therapies,'' the question becomes: Does Jane's insurance cover a bone marrow transplant for her diagnosis? If she has leukemia, the treatment may be covered; if she has cervical cancer, it may not be. Whether Jane could afford to pay out-of-pocket for such a treatment could affect her treatment choice.

The value of eligibility information is enhanced if it can be acquired quickly. Traditional methods of communication (that is, by phone or mail) are highly inefficient. Patients and health plans find it disturbing when the deductible and co-pays are not correctly applied.

When insurance inquiries of this sort are transmitted electronically, health care providers can receive the information from the health plan almost immediately. However, in current practice, each health plan may require that the health care provider's request be in a preferred format, which often does not match the format required by any other health plan. This means that the health care provider must maintain the hardware and software capability to send multiple inquiry formats and receive multiple response formats. Because of this situation, adoption of electronic methods for inquiries has been inhibited, and reliance on paper forms or the telephone for such inquiries has continued.

i. Candidates for the Standard

The HISB developed an inventory of health care information standards to be considered by the Secretary of HHS in the adoption of standards. The ANSI ASC X12N 270—Health Care Eligibility Benefit Inquiry and companion 271—Health Care Eligibility Benefit Response, the ASC X12N Interactive Health Care Eligibility/Benefit Inquiry (IHCEBI) and its companion the Interactive Health Care Eligibility/Benefit Response

(IHCEBR), the NCPDP Telecommunications Standard Format, and the NCPDP Telecommunication Claim Standard for Pharmaceutical Professional Services are the standards available for the electronic exchange of patient eligibility and coverage information.

ii. Recommended Standard

We propose to adopt the ANSI ASC X12N 270—Health Care Eligibility Benefit Inquiry and the companion ASC X12N 271—Health Care Eligibility Benefit Response as the standard for the eligibility for a health plan transaction.

When evaluated against the criteria (discussed earlier) for choosing a national standard, the ASC X12 Transaction Sets 270/271 met the criteria more often than did the ASC X12 interactive or the NCPDP transactions. The ASC X12N 270/271 transaction set is supported by an accredited standards setting organization ASC X12 (criteria #5). By comparison with the alternatives, the ASC X12N 270/271 would have relatively low additional development and implementation costs and would be consistent with other standards in this proposed rule (criteria #4 and #3). The NCPDP standards, because they are specific to pharmacy transactions, were rejected because they would not meet the needs of the rest of the health care system (criteria #2), whereas the ASC X12N 270/271 would.

The X12N subcommittee and its Workgroup 1, which is responsible for the eligibility transaction, recommended in June 1997 that the ASC X12N 270/271 be adopted as the HIPAA standard (criteria #5).

There are specific, technical reasons against adoption of the IHCEBI/IHCEBR at this time. The IHCEBI/IHCEBR is based on UNEDIFACT, not ASC X12N, syntax. Because of concurrent changes in UNEDIFACT design rules, the IHCEBI/IHCEBR is not a complete or consistent standard. It has not been classified by UNEDIFACT as ready to implement. In X12N, the current version of IHCEBI/IHCEBR is 3070, and we believe that current use is centered on a prior version (3051), which is not millennium compliant. The IHCEBI/IHCEBR transaction is not ready to be moved into version 4 (4010), as are the other transactions being recommended in this proposed rule. We also believe that current use is quite limited, and not consistent across users; in effect, current uses of this transaction have been implemented in proprietary format(s). For all these reasons, the ICHEBI/ICHEBR is neither technically ready nor stable and cannot be recommended as a standard at this time. Thus, the IHCEBI/IHCEBR would require higher additional development and implementation costs (criteria #4), and they would not be consistent or uniform with the other standards selected (criteria #3).

If an interactive eligibility transaction standard were ratified by an accredited standards setting organization sometime in the future, then it could be considered for adoption as a HIPAA standard. However, at this time, we expect that any future standard for an interactive eligibility transaction is likely to differ substantially from the current IHCEBI/IHCEBR and the time to readiness could be substantial as well (criteria #6).

The goal of administrative simplification, as expressed in the law, is to improve the efficiency and effectiveness of the health care system (criteria #1). Whereas it might seem that the interactive message would yield greater efficiencies in terms of time saved, similar efficiencies are available with the ASC X12N 270/271. In fact, the ASC X12N 270 can be used to submit a single eligibility inquiry electronically for a very quick turnaround 271 response. Response times, measured in seconds, would compare favorably to a true ''interactive'' transaction and would be a substantial improvement over telephone inquiries or paper methods of eligibility determination.

Transactions concerning eligibility for a health plan would be used only to verify the patient's eligibility and benefits; they would not provide a history of benefit use. The electronic exchange using these standards would occur usually between health care providers and health plans, but the standard would support electronic inquiry and response among other entities. In addition to uses by various health care providers (for example, hospitals, laboratories, and physicians), the ASC X12N 270/271 can be used by an insurance company, a health maintenance organization, a preferred provider organization, a health care purchaser, a professional review organization, a third-party administrator, vendors (for example, billing services), service bureaus (such as value-added networks), and government agencies (Medicare, Medicaid, and CHAMPUS).

The eligibility transaction is designed to be used for simple status requests as well as more complex requests that may be related to specific clinical procedures. General requests might include queries for: all benefits and coverage conditions, eligibility status (whether the patient is active in the health plan), maximum benefits (policy limits), exclusions, in-plan/out-of-plan benefits, coordination of benefits information, deductibles, and copayments. Specific requests might include procedure coverage dates; procedure coverage maximum; amounts for deductible, co-insurance, co-payment, or patient responsibility; coverage limitations; and noncovered amounts.

Another part of the ASC X12N 271 is designed to handle requests for eligibility ''rosters,'' which are essentially lists of entities—subscribers and dependents, health care providers, employer groups, health plans—and their relationships to each other. For example, this transaction might be used by a health plan to submit a roster of patients to a health care provider to designate a primary care physician or to alert a hospital about forthcoming admissions. We are not recommending this use of the ASC X12N 270/271 at this time because the roster implementation guide is not millennium compliant and the standards development process for the implementation guide is not completed. After the standards development process for the roster implementation guide is completed, it may be considered for adoption as a national standard.

The data elements for this transaction, and other information, may be found in Addendum 6.

b. Requirements

i. Health plans.

In § 142.1604, Requirements: Health plans, we would require health plans to use only the standard specified in § 142.1602 for electronic eligibility transactions.

ii. Health care clearinghouses.

We would require in § 142.1606 that each health care clearinghouse use the standard specified in § 142.1602 for eligibility transactions.

iii. Health care providers.

In § 142.1608, Requirements: Health care providers, we would require each health care provider that transmits any health plan eligibility transactions electronically to use the standard specified in § 142.1602 for those transactions.

c. Implementation Guide and Source

The implementation guide is available for the ASC X12N 270/271 (004010X092) at no cost from the Washington Publishing Company site on the World Wide Web at the following address: http://www.wpc-edi.com/hipaa/. The data definitions and

description of data conditions may also be obtained from this website.

Users without access to the Internet may purchase implementation guides from Washington Publishing Company directly. Washington Publishing Company, 806 W. Diamond Ave., Suite 400, Gaithersburg, MD, 20878; telephone 301–590–9337; FAX: 301–869–9460.

7. Standard: Health Plan Premium Payment (Subpart Q)

[Please label any written comments or e-mailed comments about this section with the subject: Premium]

a. Background

Electronic payment methods have become commonplace for consumers who pay their monthly mortgage, power, or telephone bills electronically. Yet, electronic payment of health insurance premiums by employers is not common at all.

Adoption of a standard for electronic payment of health plan premiums would benefit employers and other sponsors, especially, by providing the opportunity to convert to a single electronic transmission format where paper forms and premium payment formats may vary from health plan to health plan. Many of these sponsors already use X12 standards in their core business activities (for example, purchasing) unrelated to the provision of health care benefits to employees. Federal and State governments when acting as employers and other government agencies that transmit premium payments to outside organizations (for example, State Medicaid agencies that pay premiums to outside organizations such as managed care organizations) would also benefit from these electronic transactions.

i. Candidates for Standard.

According to the inventory conducted for HHS by the HISB, only one standard developed and maintained by a standards developing organization for health plan premium payment transaction exists. It is the ASC X12 820—Payment Order/Remittance Advice.

ii. Recommended Standard.

The standard we are proposing to adopt for health plan premium payment transactions is the ASC X12 820—Payment Order/Remittance Advice. If we adopt the ASC X12 820, health plans would be able to transmit premium payments either as a summary payment or with individual payment detail, or as payment amount and adjustment amount, using a single, electronic format. Health plans would be required to accept the standard transaction as the electronic transmission; neither sponsors nor health plans would have to continue to maintain and use multiple proprietary premium payment formats or resort to paper.

Although the premium order/remittance advice (ASC X12 820), used for health plan premium payments, can be paired with the ASC X12N 811—Consolidated Service Invoice/Statement, which is used for health plan premium billing, our proposal and the focus of the statute is on a standard only for health plan premium payments.

In addition to being the only relevant standard designed for use by sponsors, the ANSI ASC X12 820 met 9 of the 10 criteria deemed to be applicable in evaluating this potential standard. It would improve the efficiency of premium payment transactions by prescribing a single, standard format. It was designed to meet the needs of health care providers, health plans, and health care clearinghouses by virtue of its development within the ASC X12 consensus process, in which representatives of health care providers, health plans, and health care clearinghouses participate. It is consistent with the other ASC X12 standards detailed in this proposed rule. Its development costs are relatively low, given the X12 development process; its implementation costs would be relatively low as it can be implemented along with a suite of X12 transaction sets, often with a single translator. It was developed and will be maintained by the ANSI-accredited standards setting organization X12. It is ready for implementation, with the official implementation guide to which we refer in Addendum 7 to this proposed rule. It was designed to be technology neutral by X12. Precise and unambiguous definitions for each data element in the transaction set are documented in the implementation guides.

The ANSI ASC X12 820—Payment Order/Remittance Advice is currently used in applications other than health care. However, it is currently not in widespread use in the health insurance industry because most health plan premium payments are not done electronically. However, some large organizations are using the ASC X12 820 to meet other business requirements, such as automated purchasing. The ASC X12 820 is used in the health care industry for premium payment information exchanged between the sponsor and the health plan; it should not be confused with the ASC X12 834, which includes additional nonpremium payment information. The ASC X12 820 is not intended to be used to carry enrollment or other eligibility information.

The data elements for this transaction, and other information, may be found in Addendum 7.

b. Requirements

In § 142.1702, we would specify the following as the standard for health plan premium payment: ASC X12 820—Payment Order/Remittance Advice (004010X061). We would specify where to find the implementation guide and incorporate it by reference.

i. Health plans.

In § 142.1704, Requirements: Health plans, we would require health plans to accept only the standard specified in § 142.1702 for electronic health plan premium payments.

ii. Health care clearinghouses.

We would require in § 142.1706 that each health care clearinghouse use the standards specified in § 142.1702 for health plan premium payment transactions.

iii. Sponsors.

There would be no requirement for sponsors to use the standard: they are not one of the entities subject to the requirements of HIPAA. However, to the extent a sponsor uses an electronic standard, it would benefit that sponsor to use the standard we adopt for the reasons discussed earlier. In addition, HIPAA contains no provisions that would prohibit a health plan requiring sponsors with which its conducts transactions electronically to use the adopted standard.

c. Implementation Guide and Source

The implementation guide for this transaction is the ASC X12N 820—Payroll Deducted and Other Group Premium Payment for Insurance Products (004010X061).

The implementation guide is available at no cost from the Washington Publishing Company site on the World Wide Web at the following address: http://www.wpc-edi.com/hipaa/.

Users without access to the Internet may purchase implementation guides from Washington Publishing Company directly. Washington Publishing Company, 806 W. Diamond Ave., Suite 400, Gaithersburg, MD, 20878; telephone 301–590–9337; FAX: 301–869–9460.

8. Standard: Referral Certification and Authorization (Subpart R)

[Please label any written comments or e-mailed comments about this section with the subject: Referral]

a. Background

Increasingly, the delivery of health care is focused on achieving greater

value from each health care dollar, and rigorous monitoring of health care utilization has become a common method adopted by health plans for achieving their value goals. Traditional methods of communication between health care providers and health plans or their designates, which rely on a combination of paper forms and telephone calls, are neither efficient nor cost effective and may impede the delivery of care. The burden and inefficiencies of these communications could be reduced by the adoption of standardized and electronic methods for making the requests and receiving responses.

i. Candidates for Standard.

According to the inventory of standards produced by the HISB for HHS, there is only one standard available for referral certification and authority. It is the ASC X12N 278, Health Care Services Review Information.

ii. Recommended Standard.

The ANSI ASC X12N 278—Health Care Services Review Information is the standard proposed for electronic exchange of requests and responses between health care providers and review organizations.

These exchanges of information can be initiated by either the health care provider or the health plan. The health care provider requests from a designated review entity authorization or certification for a patient to receive a particular health care service. In turn, the review entity receives and responds to the health care provider's request. In addition to direct electronic inquiry and response, the ASC X12N 278 can be used in connection with point of service terminals.

Many different types of organizations may act as a review entity in such an exchange. These include health plans, insurance companies, health maintenance organizations, preferred provider organizations, health care purchasers, managed care organizations providing coverage to Medicare and Medicaid beneficiaries, professional review organizations, other health care providers, and benefit management organizations, to name a few.

These requests and responses may pertain to many different health care events, including reviews for: treatment authorization, specialty referrals, pre-admission certifications, certifications for health care services (such as home health and ambulance), extension of certifications, and certification appeals.

As with all the other ASC X12 transactions being proposed in this rule, the ASC X12N 278 was developed with widespread input from health care industry representatives in a consensus process taking into account business needs. Further, the standard is fully compatible with the other ASC X12 standards and can be translated to and from native application systems using off-the-shelf software (commonly referred to as ''translators'') that is readily available and used by all industries utilizing ASC X12 standards.

The data elements for this transaction, and other information, may be found in Addendum 8.

b. Requirements

In § 142.1802, we would specify the following as the standard for referral certifications and authorizations: ASC X12N 278—Request for Review and Response (004010X094). We would specify where to find the implementation guide and incorporate it by reference.

i. Health plans.

In § 142.1804, Requirements: Health plans, we would require health plans to accept and transmit only the standard specified in § 142.1802 for electronic referral certifications and authorizations.

ii. Health care clearinghouses.

We would require in § 142.1806 that each health care clearinghouse use the standard specified in § 142.1802 for referral certifications and authorizations.

iii. Health care providers.

In § 142.1808, Requirements: Health care providers, we would require each health care provider that transmits referral certifications and authorizations electronically to use the standard specified in § 142.1802 for the transactions.

c. Implementation Guide and Source

The implementation guide for the ASC X12N 278 (004010X094) is available at no cost from the Washington Publishing Company site on the World Wide Web at the following address: http://www.wpc-edi.com/hipaa/.

Users without access to the Internet may purchase implementation guides from Washington Publishing Company directly. Washington Publishing Company, 806 W. Diamond Ave., Suite 400, Gaithersburg, MD, 20878; telephone 301–590–9337; FAX: 301–869–9460.

9. Standard: First Report of Injury

[Please label any written comments or e-mailed comments about this section with the subject: Injury]

Background

''First report of injury'' is not a general term or transaction in the health care insurance industry. Upon investigation, we found that the property and casualty insurance industry, among whose lines of business is workers compensation insurance, had developed a standard transaction entitled ''Report of Injury, Illness or Incident'' (ASC X12N 148). This transaction set was developed within ASC X12N to encompass more than 30 functions and exchanges that occur among the numerous parties to a workers compensation claim. The transaction can be used by an employer, first, to report an employee injury or illness to the State government agency that administers workers compensation and, second, to report to the employer's workers compensation insurance carrier so that a claim can be established to cover the employee's losses (income, health care, disability). When the employer is the Federal government, the transaction is used to report to the Department of Labor's Office of Workers Compensation Programs. In a few States, the transaction can also be used by health care providers to report an employee's work-related injury to employers and/or the employer's workers compensation insurance carrier. The transaction can be used by State agencies responsible for monitoring the disposition of a workers compensation claim. Other uses include summary reporting of employee injuries and illness to State workers compensation boards, commissions, or agencies; the Federal Bureau of Labor Statistics; the Federal Occupational Safety and Health Administration; and the Federal Environmental Protection Agency.

The current, approved version of this transaction is 3070, which is not millennium compliant. There is no approved implementation guide for version 4010, which would be millennium compliant. The ASC X12N workgroup is developing a version 4010 or higher implementation guide and data dictionary. The workgroup hopes to secure ASC X12N approval for its revised standard and implementation guide in the spring of 1998. Current workgroup planning is for a single implementation guide that covers all of the business uses to which we refer above.

Recommendation:

We do not recommend that the ASC X12N 148—Report of Injury, Illness or Incident be adopted at this time, for the following reasons:

a. There is no millennium-compliant version of an implementation guide for this transaction.

b. There is no complete data dictionary for this transaction.

c. The implementation guide under development covers more business requirements and functions than the ''first report of injury'' specified in the statute.

d. Consultation with the transaction's extensive user community is necessary to establish a consensus regarding the scope of the transaction set, and this is not possible in the time available to the Secretary for promulgating a final regulation.

e. An alternative to the ASC X12N 148 has been brought to our attention and must be evaluated.

The alternative EDI format is that developed and maintained by the International Association of Industrial Accident Boards and Commissions (IAIABC). The IAIABC EDI format was not identified in the ANSI HISB inventory of standards developed for HHS because the IAIABC is not an ANSI-accredited standards setting organization.

Under the law, a standard adopted under the administrative simplification provisions of HIPAA is required to be ''a standard that has been developed, adopted, or modified by a standard setting organization'' (section 1172(c) of the Act) (if a standard exists). The Secretary may adopt a different standard if it would substantially reduce administrative costs to health care providers and health plans when compared to the alternatives (section 1172(c)(2)(A)).

Accordingly, the IAIABC EDI format must be evaluated before a national standard for first report of injury transactions is adopted because it is reported to be widely used. The IAIABC will be requested to submit documentation so that its first report of injury format can be evaluated according to the ten criteria applied to all other standards.

In assessing the utility of this alternative standard, we will follow the Guiding Principles for selecting a standard to evaluate the IAIABC EDI format against that developed and maintained by ANSI ASC X12N. The following questions about the IAIABC standard will be of particular importance:

a. To what extent is this format widely accepted and used by organizations performing these transactions?

b. Is this format millennium-compliant?

c. Does this standard meet the requirements set forth in the Administrative Simplification provisions of HIPAA for improving the efficiency and effectiveness of the health care system?

d. Is this a format developed, maintained, or modified by a standard setting organization as specified in Section 1171 (8) or does it meet the exceptions specified in Section 1172 (c)(2) of the Act?

We do not recommend that the IAIABC format be adopted at this time. We have asked that the IAIABC provide documentation for their format.

In view of these facts, HHS will take the following actions with regard to adopting a standard for ''first report of injury'':

a. Continue to monitor the progress of the ASC X12N subcommittee toward development of a final, complete, millennium-compliant standard, implementation guide, and data dictionary for this transaction.

b. Request that ASC X12N review the ASC X12N 148 to determine whether all of its broad functionality should be included in a standard to be adopted under HIPAA authority or whether the scope of the transaction should be limited by dividing the functions into separate implementation guides.

c. Review and evaluate documentation from the IAIABC on its format so that it can be evaluated according to the ten criteria used to evaluate candidate standards and in relation to the ASC X12N 148 as described above.

d. After the ASC X12N subcommittee has completed its standard setting role and approved a 4010 version or higher implementation guide and data definitions for the ASC X12N 148 and after analysis of the IAIABC alternative standard, issue a subsequent proposed rule promulgating a standard for ''first report of injury''.

III. Implementation of the Transaction Standards and Code Sets

A. Compliance Testing

We have identified three levels of testing that must be addressed in connection with the adoption and implementation of the standards we are proposing and their required code sets:

Level 1—Developmental Testing—This is the testing done by the standards setting organization during the development process. The conditions for, and results of, this testing are made public by the relevant standards bodies, and are available at the following Internet web site:

http://www.disa.org

The information on the web site is provided at the discretion of the standards setting organization and could, among other things, refer to pilot, limited, or large-scale production if appropriate. Information regarding code set testing will also be posted to a website. This website will be advertised on the HCFA home page.

Level 2—Validation Testing—This is testing of sample transactions to see whether they are being written correctly. We expect that private industry will provide commercial testing at this level. This level of testing would give the participants a sense of whether they are meeting technical specifications of structure and syntax for a transaction, but it may not necessarily test for valid data. This type of testing would inform individuals that the transaction probably meets the specifications. These edits would be less rigorous than those that might be applied by a health plan before payment (in the case of a claim) or by a health care provider prior to posting (in the case of a health care claim payment/advice). The test conditions and results from this level are generally shared only between the parties involved.

Level 3—Production Testing—This tests a transaction from a sender through the receiver's system. The test information is exposed to all of the edits, lookups, and checks that the transaction would undergo in a production situation. The test conditions and results from this level are generally shared only between the parties involved.

Pilot production—Billions of dollars change hands each year as a result of health care claims processing alone. For that reason, we believe the industry should sponsor pilot production projects to test transaction standards that are not currently in full production prior to the effective date for adoption. Pilot production tests are not necessary for the NCPDP retail pharmacy claim since it is already in widespread use. On the other hand, some of the ASC X12N implementations have not yet been placed in general production. We believe that pilot production results should be posted on a website and show information of general interest to potential users. The information given is at the discretion of the entities conducting the pilot and might contain information regarding the number of claims processed, the identity of the entities participating in the pilot, and the name, telephone number or e-mail address of an individual willing to answer questions from the public.

It would be useful to all participants if pilot production projects and the results were posted to a web site for all transactions. For the claim and equivalent encounter transactions, we believe that posting pilot production projects and results to a web site must be mandatory.

B. Enforcement

Failure to comply with standards may well result in monetary penalties. The Secretary is required by statute to impose penalties of not more than $100 per violation on any person who fails to comply with a standard, except that the total amount imposed on any one person in each calendar year may not exceed $25,000 for violations of one requirement.

We are not proposing any enforcement procedures at this time, but we will do so in a future Federal Regulations document, once the industry has some experience with using the standards.

We are at this time, however, soliciting input on appropriate mechanisms to permit independent assessment of compliance. We are particularly interested in input from those engaging in health care EDI as well as from independent certification and auditing organizations addressing issues of documentary evidence of steps taken for compliance; need for/desirability of independent verification, validation, and testing of systems changes; and certifications required for off-the-shelf products used to meet the requirements of this regulation.

IV. New and Revised Standards

A. New Standards

To encourage innovation and promote development, we intend to develop a process that would allow an organization to request a replacement to any adopted standard or standards.

An organization could request a replacement to an adopted standard by requesting a waiver from the Secretary of HHS to test a new standard. The organization, at a minimum, must demonstrate that the new standard clearly offers an improvement over the adopted standard. If the organization presents sufficient documentation that supports testing of a new standard, we want to be able to grant the organization a temporary waiver to test it while remaining in compliance with the law. We do not intend to establish a process that would allow organizations to request waivers as a tool to avoid using any adopted standard.

We would welcome comments on the following: (1) How we should establish this process, (2) the length of time a proposed standard should be tested before we decide whether to adopt it, and (3) other issues and recommendations we should consider in developing this process.

Following is one possible process:

- Any organization that wishes to replace an adopted standard must submit its waiver request to an HHS evaluation committee (not currently established or defined). The organization must do the following for each standard it wishes to replace:

  + Provide a detailed explanation, no more than 10 pages in length, of how the replacement would be a clear improvement over the current standard in terms of the principles listed in section I.D., *Process for developing national standards,* of this preamble.

  + Provide specifications and technical capabilities on the new standard, including any additional system requirements.

  + Provide an explanation, no more than 5 pages in length, of how the organization intends to test the standard, including the number and types of health care plans and health care providers expected to be involved in the test, geographical areas, and beginning and end dates of the test.

- The committee's evaluation would, at a minimum, be based on the following:

  + A cost-benefit analysis.

  + An assessment of whether the proposed replacement demonstrates a clear improvement to an existing standard.

  + The extent and length of time of the waiver.

- The evaluation committee would inform the organization requesting the waiver within 30 working days of the committee's decision on the waiver request. If the committee decides to grant a waiver, the notification may include the following:

  + Committee comments such as the following:

  —The length of time for which the waiver applies if it differs from the waiver request.

  —The sites the committee believes are appropriate for testing if they differ from the waiver request.

  —Any pertinent information regarding the conditions of an approved waiver.

- Any organization that receives a waiver would be required to submit a report containing the results of the study, no later than 3 months after the study is completed.

- The committee would evaluate the report and determine whether the proposed new standard meets the 10 guiding principles and whether the advantages of a new standard would significantly outweigh the disadvantages of implementing it and make a recommendation to the Secretary.

B. Revised Standards

We recognize the very significant contributions that the traditional content committees (the NUCC, the NUBC, the ADA, and the National Council for Prescription Drug Programs) have made to health care transaction content over the years and, in particular, the work they contributed to the content of the standards proposed in this proposed rule. Other Federal and private entities (the National Center for Health Statistics, the Health Care Financing Administration, the AMA, and the ADA) have developed and maintained the medical data code sets proposed as standards in this proposed rule. In a letter dated June 10, 1997, WEDI recommended that the NUBC, NUCC and ADA be recognized as the appropriate organizations to specify data content. We expect that these current committees would continue to play an important role in maintenance of data content for standard health care transactions. The organizations assigned responsibility for maintenance of data content for standard health care transactions will work with X12N data maintenance committees, ensuring that implementation documentation is updated in a consistent and timely fashion.

We intend that the private sector, with public sector involvement, continue to have responsibility for defining the data element content of the administrative transactions. Both Federal agencies and private organizations will continue to be responsible for maintaining medical data code sets. The current data content committees are focused on transactions that involve health care providers and health plans. There may be some organizations that represent employers or other sponsors and health plans and are interested in assuming the burden of maintenance of the data content standards for the X12 820 and 834.

We propose to designate content committees in the final rule and to specify the ongoing activities of these content committees pertaining to the data maintenance of all X12N standards identified in this rule, as well as attachments. All approved changes, not including medical code sets, would need to fit into the appropriate ASC X12N implementation guide(s) and receive ASC X12N approval, with the exception of the NCPDP standard. The NCPDP would continue to operate as currently for data content.

It is important that data content revisions be made timely in this new standards environment. The Secretary of HHS may not revise any standard more

frequently than once a year and must permit no fewer than 180 days for implementation for all participants after adopting a revised standard. New values could be added to the code sets for certain data elements in transaction standards more frequently than once a year. For example, alpha-numeric HCPCS and NDC, two of the proposed standard code sets for medical data, now have mechanisms for ongoing addition to new codes as needed to reflect new health services and new drugs. Such ongoing update mechanisms would continue to be needed in the year 2000 and beyond.

The private sector organizations charged with data element content maintenance would have to ensure that the revised standard contains the most recent data maintenance items that have been brought to them and that those new data requirements are adequately documented and communicated to the public. We believe that, at minimum, the data maintenance documentation needs to include the data name, data definition, the status of the data name (that is, required or conditional), written conditions regarding the circumstances under which the data would have to be supplied, a rationale for the new or revised data item, and its placement in an implementation guide. We believe that any data request approved by a body three or more months prior to the adoption of a new or revised standard would have to be included in that new standard implementation, assuming that no major format restructuring would have to be done. (A new data element, code, or segment would not constitute major restructuring.)

We believe that any body with responsibility for maintaining a standard under this proposed rule must allow public access to their decision making processes. We plan to engage standards setting organizations and other organizations responsible for maintenance of data element content and standard code sets to establish a process that will enable timely standards development/updates with appropriate industry input. One approach may be as follows:

• Each of the data maintenance bodies has biannual meetings with the public welcome to attend and participate without payment of fees.

+ These public meetings are announced to the broadest possible audience, at minimum by means of a website. The announcements of the meetings may also be available via widely read publications, such as the *Commerce Business Daily* or the **Federal Register**.

+ Annual public meeting schedules are posted on a website not later than 90 days after the effective date of the final rule, and annually on that date thereafter.

+ The data maintenance body establishes a central contact (name and post office and e-mail addresses) to which the public could submit correspondence (such as agenda items or data requests).

+ During these two open meetings, the public has the opportunity to voice concerns and suggest changes.

+ Each data maintenance body drafts procedures for the public to follow in regard to its meeting protocols.

• Each data maintenance body drafts procedures for the public to submit requests for data or for revisions to the standard. These draft procedures are easy to use and are adequately communicated to the public.

• Each designated data maintenance body is also responsible for communicating actions taken on requests to the requestor and the public, in addition to communicating any changes made to a standard. This may be done via mail, e-mail, publications, or newsletters but, at a minimum, are published on the website. (We believe the Internet is the most cost effective way of communicating this type of information.)

• Each data maintenance body responds definitively to each request it receives no later than three months after the request is received.

An alternative approach would be to require an organization which desired to be designated by the Secretary as the official data content maintenance body for a particular transaction to meet the ANSI criteria for due process found at http://www.ansi.org/proc__1.html. Not only would these criteria meet the intent of HIPAA to advocate an open, balanced, consensus process, but once an organization met these criteria, it would be able to apply for ANSI accreditation if it so desired.

It is not our intention to increase any current burdens on data maintenance bodies. Our concern is that the public have a voice in the data maintenance process and that changes to a standard be timely and adequately communicated to the industry. We welcome any comments regarding the approach outlined above and recommendations for data maintenance committees for each X12N transaction standard identified in this rule.

We also solicit comments on the appropriateness of ongoing Federal oversight/monitoring of maintenance processes and procedures.

V. Collection of Information Requirements

Under the Paperwork Reduction Act of 1995 (PRA), we are required to provide 60-day notice in the **Federal Register** and solicit public comment before a collection of information requirement is submitted to the Office of Management and Budget (OMB) for review and approval. In order to fairly evaluate whether an information collection should be approved by OMB, section 3506(c)(2)(A) of the Paperwork Reduction Act of 1995 requires that we solicit comment on the following issues:

• The need for the information collection and its usefulness in carrying out the proper functions of our agency.

• The accuracy of our estimate of the information collection burden.

• The quality, utility, and clarity of the information to be collected.

• Recommendations to minimize the information collection burden on the affected public, including automated collection techniques.

Subpart K—Health Claims or Equivalent Encounter Information Standard

142.1104 Requirements: Health plans.
142.1108 Requirements: Health care providers.

Subpart L—Health Care Payment and Remittance Advice

142.1204 Requirements: Health plans.

Subpart M—Coordination of Benefits

142.1304 Requirements: Health plans.

Subpart N—Health Claims Status

142.1404 Requirements: Health plans.
142.1408 Requirements: Health care providers.

Subpart O—Enrollment and Disenrollment in a Health Plan

142.1504 Requirements: Health plans.

Subpart P—Eligibility for a Health Plan

142.1604 Requirements: Health plans.
142.1608 Requirements: Health care providers.

Subpart Q—Health Plan Premium Payments

142.1704 Requirements: Health plans.

Subpart R—Referral Certification and Authorization

142.1804 Requirements: Health plans.
142.1808 Requirements: Health care providers.

Discussion: In summary, each of the sections identified above require health care plans, and/or health care providers to use any given standard proposed in this regulation for all electronically transmitted standard transactions that require it on and after the effective date given to it.

The emerging and increasing use of health care EDI standards and

transactions raises the issue of the applicability of the PRA. The question arises whether a regulation that adopts an EDI standard used to exchange certain information constitutes an information collection subject to the PRA. However, for the purpose of soliciting useful public comment we provide the following burden estimates.

In particular, the initial burden on the estimated 4 million health plans and 1.2 million health care providers to modify their current computer systems software would be 10 hours/$300 per entity, for a total burden of 52 million hours/$1.56 billion. While this burden estimate may appear low, on average, we believe it to be accurate. This is based on the assumption that these and the other burden calculations associated with the HIPAA administrative simplification systems modifications may overlap. This average also takes into consideration that: (1) One or more of these standards may not be used; (2) some of the these standards may already be in use by several of the estimated entities; (3) modifications may be performed in an aggregate manner during the course of routine business and/or; (4) modifications may be made by contractors such as practice management vendors, in a single effort for a multitude of affected entities.

We solicit comment on whether the requirements to which we refer above constitute a one-time or an ongoing, usual and customary business practice as defined 5 CFR 1320.3(b)(2), the Paperwork Reduction regulations.

We invite public comment on the issues discussed above. If you comment on these information collection and recordkeeping requirements, please e-mail comments to JBurke1@hcfa.gov (Attn:HCFA–0149) or mail copies directly to the following:

Health Care Financing Administration, Office of Information Services, Information Technology Investment Management Group, Division of HCFA Enterprise Standards, Room C2–26–17, 7500 Security Boulevard, Baltimore, MD 21244–1850. Attn: John Burke HCFA–0149

and

Office of Information and Regulatory Affairs, Office of Management and Budget, Room 10235, New Executive Office Building, Washington, DC 20503, Attn: Allison Herron Eydt, HCFA Desk Officer.

VI. Response to Comments

Because of the large number of items of correspondence we normally receive on **Federal Register** documents published for comment, we are not able to acknowledge or respond to them individually. We will consider all comments we receive by the date and time specified in the **DATES** section of this preamble, and, if we proceed with a subsequent document, we will respond to comments in the preamble to that document.

VII. Impact Analysis

As the effect of any one standard is affected by the implementation of other standards, it can be misleading to discuss the impact of one standard by itself. Therefore, we did an impact analysis on the total effect of all the standards in the proposed rule concerning the national provider identifier (HCFA–0045–P), which can be found elsewhere in this **Federal Register.**

We intend to publish in each proposed rule an impact analysis that is specific to the standard or standards proposed in that rule, but the impact analysis will assess only the relative cost impact of implementing a given standard. Thus, the following discussion contains the impact analysis for each of the transactions proposed in this rule. As stated in the general impact analysis in HCFA–0045–P, we do not intend to associate costs and savings to specific standards.

Although we cannot determine the specific economic impact of the standards being proposed in this rule (and individually each standard may not have a significant impact), the overall impact analysis makes clear that, collectively, all the standards will have a significant impact of over $100 million on the economy. Also, while each standard may not have a significant impact on a substantial number of small entities, the combined effects of all the proposed standards may have a significant effect on a substantial number of small entities. Therefore, the following impact analysis should be read in conjunction with the overall impact analysis.

In accordance with the provisions of Executive Order 12866, this proposed rule was reviewed by the Office of Management and Budget.

Guiding Principles for Standard Selection

The implementation teams charged with designating standards under the statute have defined, with significant input from the health care industry, a set of common criteria for evaluating potential standards. These criteria are based on direct specifications in the HIPAA, the purpose of the law, and principles that support the regulatory philosophy set forth in Executive Order 12866 of September 30, 1993, and the Paperwork Reduction Act of 1995. In order to be designated as a standard, a proposed standard should:

- Improve the efficiency and effectiveness of the health care system by leading to cost reductions for or improvements in benefits from electronic HIPAA health care transactions. This principle supports the regulatory goals of cost-effectiveness and avoidance of burden.
- Meet the needs of the health data standards user community, particularly health care providers, health plans, and health care clearinghouses. This principle supports the regulatory goal of cost-effectiveness.
- Be consistent and uniform with the other HIPAA standards (that is, their data element definitions and codes and their privacy and security requirements) and, secondarily, with other private and public sector health data standards. This principle supports the regulatory goals of consistency and avoidance of incompatibility, and it establishes a performance objective for the standard.
- Have low additional development and implementation costs relative to the benefits of using the standard. This principle supports the regulatory goals of cost-effectiveness and avoidance of burden.
- Be supported by an ANSI-accredited standards developing organization or other private or public organization that would ensure continuity and efficient updating of the standard over time. This principle supports the regulatory goal of predictability.
- Have timely development, testing, implementation, and updating procedures to achieve administrative simplification benefits faster. This principle establishes a performance objective for the standard.
- Be technologically independent of the computer platforms and transmission protocols used in HIPAA health transactions, except when they are explicitly part of the standard. This principle establishes a performance objective for the standard and supports the regulatory goal of flexibility.
- Be precise and unambiguous but as simple as possible. This principle supports the regulatory goals of predictability and simplicity.
- Keep data collection and paperwork burdens on users as low as is feasible. This principle supports the regulatory goals of cost-effectiveness and avoidance of duplication and burden.
- Incorporate flexibility to adapt more easily to changes in the health care infrastructure (such as new services, organizations, and provider types) and information technology. This principle

supports the regulatory goals of flexibility and encouragement of innovation.

General

The effect of implementing standards on health care clearinghouses is basically the same for all the standards. Currently, health care clearinghouses receive and transmit various transactions using a variety of formats. The implementation of standard transactions may reduce the variability in the data received from some groups, such as health care providers. The implementation of any standard will require some one-time changes to health care clearinghouse systems. Health care clearinghouses should be able to make modifications that meet the deadlines specified in the legislation, but some temporary disruption of processing could result. Once the transition is made, health care clearinghouses may have less ongoing system maintenance. Costs may vary according to the complexity of the standard, but costs may be recouped from customers.

Health care clearinghouses would face impacts (both positive and negative) similar to those experienced by health plans (which we discuss in more detail in the discussions for specific transactions). However, implementation would likely be more complex, because health care clearinghouses deal with many health care providers and health plans and may have to accommodate additional nonstandard formats (in addition to those formats they currently support), as well as standards we adopt. (The additional nonstandard formats would be from those health care providers that choose to stop submitting directly to an insurer and submit through a health care clearinghouse.) This would also mean increased business for the health care clearinghouse.

Converting to any standard will result in one-time conversion costs for health care providers, health care clearinghouses, and health plans as well. Some health care providers and health plans would incur those costs directly and others may incur them in the form of a fee from health care clearinghouses or, for health care providers, other agents.

Each standard compares favorably with typical ASC X12 standards in terms of complexity and ease of use. No one in the ASC X12 subcommittee assumes that every entity that sends or receives an ASC X12 transaction has reprogrammed its information systems in order to do so. Every transaction is designed, and the technical review process assures, that it will be compatible with the commercial, off-the-shelf translator programs that are widely available in the United States. These translators significantly reduce the cost and complexity of achieving and maintaining compliance with all ASC X12 standards. Universal communication with all parties in the health care industry is thus assured.

Specific technology limitations of existing systems could affect the complexity of conversion. Also, some existing health care provider systems may not have the resources to house a translator to convert from one format to another.

Following is the portion of the impact analysis that relates specifically to the standards that are the subject of this regulation.

A. Code Sets—Specific Impact of Adoption of Code Sets for Medical Data

Affected Entities

Standard codes and classifications are required in some segments of administrative and financial transactions. Those that create and process administrative transactions must implement the standard codes according to the official implementation guides designated for each coding system and each transaction. Those that receive standard electronic administrative transactions must be able to receive and process all standard codes (and modifiers, in the cases of HCPCS and CPT), irrespective of local policies regarding reimbursement for certain conditions or procedures, coverage policies, or need for certain types of information that are part of a standard transaction.

The adoption of standard code sets and coding guidelines for medical data supports the regulatory goals of cost-effectiveness and the avoidance of duplication and burden. The code sets that are being proposed as initial HIPAA standards are all de facto standards already in use by most health plans, health care clearinghouses, and health care providers.

Health care providers currently use the recommended code set for reporting diagnoses and one or more of the recommended procedure coding systems for reporting procedures/services. Since health plans can differ on the codes they accept, many health care providers use different coding guidelines for dealing with different health plans, sometimes for the same patient. (Anecdotal information leads us to believe that use of other codes is widespread, but we cannot quantify the number.) Some of these differences reflect variations in covered services that will continue to exist irrespective of data standardization. Others reflect differences in a health plan's ability to accept as valid a claim that may include more information than is needed or used by that health plan. The requirement to use standard coding guidelines will eliminate this latter category of differences and should simplify claims submission for health care providers that deal with multiple health plans.

Currently, there are health plans that do not adhere to official coding guidelines and have developed their own plan-specific guidelines for use with the standard code sets, which do not permit the use of all valid codes. (Again, we cannot quantify how many health plans do this, but we are aware of some instances.) When the HIPAA code set standards become effective, these health plans would have to receive and process all standard codes, irrespective of local policies regarding reimbursement for certain conditions or procedures, coverage policies, or need for certain types of information that are part of a standard transaction.

We believe that there is significant variation in the reporting of anesthesia services, with some health plans using the anesthesia section of CPT and others requiring the anesthesiologist or nurse anesthetist to report the code for the surgical procedure itself. When the HIPAA code sets become effective, health plans following the latter convention will have to begin accepting codes from the anesthesia section.

We note that by adopting standards for code sets we are requiring that all parties accept these codes within their electronic transactions. We are not requiring payment for all these services. Those health plans that do not adhere to official coding guidelines must therefore undertake a one-time effort to modify their systems to accept all valid codes in the standard code sets or engage a health care clearinghouse to preprocess the standard claims data for them. Health plans should be able to make modifications to meet the deadlines specified in the legislation, but some temporary disruption of claims processing could result.

There may be some temporary disruption of claims processing as health plans and health care clearinghouses modify their systems to accept all valid codes in the standard code sets.

B. Transaction Standards

1. Specific Impact of Adoption of the National Council of Prescription Drug Programs (NCPDP) Telecommunication Claim

a. Affected Entities

Health care providers that submit retail pharmacy claims, and health care plans that process retail pharmacy claims, currently use the NCPDP format. The NCPDP claim and equivalent encounter is used either in on-line interactive or batch mode. Since all pharmacy health care providers and health plans use the NCPDP claim format, there are no specific impacts to health care providers.

b. Effects of Various Options

The NCPDP format met all the principles and there are no known options for a standard retail pharmacy claim transaction.

2. Specific Impact of Adoption of the ASC X12N 837 for Submission of Institutional Health Care Claims, Professional Health Care Claims, Dental Claims, and Coordination of Benefits

a. Affected Entities

All health care providers and health plans that conduct EDI directly and use other electronic format(s), and all health care providers that decide to change from a paper format to an electronic one, would have to begin to use the ASC X12N 837 for submitting electronic health care claims (hospital, physician/supplier and dental). (Currently, about 3 percent of Medicare providers use this standard for claims; it is used less for non-Medicare claims.)

There would be a potential for disruption of claims processes and timely payments during a particular health plan's transition to the ASC X12N 837. Some health care providers could react adversely to the increased cost and revert to submitting hard copy claims.

After implementation, health care providers would no longer have to keep track of and use different electronic formats for different insurers. This would simplify provider billing systems and processes and reduce administrative expenses.

Health plans would be able to schedule their implementation of the ASC X12N 837 in a manner that best fits their needs, thus allaying some costs (through coordination of conversion to other standards) as long as they meet the deadlines specified in the legislation. Although the costs of implementing the ASC X12N 837 are generally one-time costs related to conversion, the systems upgrades for some smaller health care providers, health plans, and health care clearinghouses may be cost prohibitive. Health care providers and health plans have the option of using a clearinghouse.

The cost may also cause some smaller health plans that have trading partner agreements today to discontinue that partnership. That same audience of health care providers, health care clearinghouses, and health plans could conceivably be forced out of the partnerships of transmitting and accepting claims data. In these instances patients may be affected, in that, without trading partner agreements for electronic crossover of claims data for the processing of the supplemental benefit, the patient may be responsible for filing his or her own supplemental claims that are filed electronically today.

Coordination of Benefits

Once the ASC X12N 837 has been implemented, health plans that perform coordination of benefits would be able to eliminate support of multiple proprietary electronic claim formats, thus simplifying claims receipt and processing as well as reducing administrative costs. Coordination of benefits activities would also be greatly simplified because all health plans would use the same standard format.

There is no doubt that standardization in coordination of benefits will greatly enhance and improve efficiency in the overall claims process and the coordination of benefits.

From a nonsystems perspective, we do not foresee an impact to the coordination of benefits process. The COB transaction will continue to consist of the incoming electronic claim and the data elements provided on a remittance advice. Standardization in the coordination of benefits process will clearly increase efficiency in the electronic processes utilized by the health care providers, health care clearinghouses, and health plans as they work with standardized codes and processes.

b. Effects of Various Options

We assessed the various options for a standard claim transaction against the principles, listed at the beginning of this impact analysis above, with the overall goal of achieving the maximum benefit for the least cost. We found that the ASC X12N 837 for institutional claims, professional claims, dental claims, and coordination of benefits met all the principles, but no other candidate standard transaction met all the principles.

Since the majority of dental claims are submitted on paper and those submitted electronically are being transmitted using a variety of proprietary formats, the only viable choice of a standard is the ASC X12N 837. The American Dental Association (ADA) also recommended the ASC X12N 837 for the dental claim standard.

The ASC X12N 837 was selected as the standard for the professional (physician/supplier) claim because it met the principles above. The only other candidate standard, the National Standard Format, was developed primarily by HCFA for Medicare claims. While it is widely used, it is not always used in a standard manner. Many variations of the National Standard Format are in use. The NUCC, the AMA, and WEDI recommended the ASC X12N 837 for the professional claim standard.

The ASC X12N 837 was selected as the standard for the institutional (hospital) claim because it met the principles above. The only other candidate standard is the UB–92 Format. While it is widely used, it is not always used in a standard manner.

The selection of the ASC X12N 837 does not impose a greater burden on the industry than the nonselected options because the nonselected formats are not used in a standard manner by the industry and they do not incorporate flexibility in order to adapt easily to change. The ASC X12N 837 presents significant advantages in terms of universality and flexibility.

3. Specific Impact of Adoption of the ASC X12N 835 for Receipt of Health Care Remittance

a. Affected Entities

Health care providers that conduct EDI with health plans and do not wish to change their internal systems would have to convert the ASC X12N 835 transactions received from health plans into a format compatible with their internal systems. Health plans that want to transmit remittance advice directly to health care providers and that do not use the ASC X12N 835 would also incur costs to convert. Many health care providers and health plans do not use this standard at this time. (We do not have information to quantify the standard's use outside the Medicare program. However, in 1996, 15.9 percent of part B health care providers and 99.4 percent of part A health care providers were able to receive this standard. All Medicare contractors must be able to send the standard.)

There would be a potential for the delay in payment or the issuance of electronic remittance advice

transactions during a particular health plan's transition to the ASC X12N 835. Some health care providers could react adversely to the increased cost and revert to use of hard copy remittance advice notices in lieu of an electronic transmission.

After implementation, health care providers would no longer have to keep track of or accept different electronic payment/remittance advice formats issued by different health care payers. This would simplify automatic posting of all electronic payment/remittance advice data, reducing administrative expenses. This would also reduce or eliminate the practice of posting payment/remittance advice data manually from hard copy notices, again reducing administrative expenses. Most manual posting occurs currently in response to the problem of multiple formats, which the standard would eliminate.

Once the ASC X12N 835 has been implemented, health plans' coordination of benefits activities, which would use the ASC X12N 837 format supplemented with limited data from the ASC X12N 835, would be greatly simplified because all health plans would use the same standard format.

Health plans would be able to schedule their implementation of the ASC X12N 835 in a manner that best fits their needs, thus allaying some costs (through coordination of conversion to other standards), as long as they meet the deadlines specified in the legislation.

The selection of the ASC X12N 835 does not impose a greater burden on the industry than the nonselected option because the nonselected formats are not used in a standard manner by the industry and they do not incorporate flexibility in order to adapt easily to change. The ASC X12N 835 presents significant advantages in terms of universality and flexibility.

b. Effects of Various Options

We assessed the various options for a standard payment/remittance advice transaction against the principles listed above, with the overall goal of achieving the maximum benefit for the least cost. We found that the ASC X12N 835 met all the principles, but no other candidate standard transaction met all the principles, or even those principles supporting the regulatory goal of cost-effectiveness.

The ASC X12N 835 was selected as it met the principles above. The only other candidate standard, the ASC X12N 820, was not selected because, although it was developed for payment transactions, it was not developed for health care payment purposes. The ASC X12N subcommittee itself recognized this in its decision to develop the ASC X12N 835.

4. Specific Impact of Adoption of the ASC X12N 276/277 for Health Care Claim Status/Response

a. Affected Entities

Most health care providers that are currently using an electronic format (of which there are currently very few) and that wish to request claim status electronically using the ASC X12N 276/277 will incur conversion costs. We cannot quantify the number of health care providers that would have to convert to the proposed standard, but we do know that no Medicare contractors use it; thus, we assume that few health care providers are able to use it at this time.

After implementation, health care providers would be able to request and receive the status of claims in one standard format, from all health care plans. This would eliminate their need to maintain redundant software and would make electronic claim status requests and receipt of responses feasible for small providers, eliminating their need to manually send and review claim status requests and responses.

Health care plans that do not currently directly accept electronic claim status requests and do not directly send electronic claims status responses would have to modify their systems to accept the ASC X12N 276 and to send the ASC X12N 277. No disruptions in claims processing or payment would occur.

After implementation, health care plans would be able to submit claim status responses in one standard format to all health care providers. Administrative costs incurred by supporting multiple formats and manually responding to claim status requests would be greatly reduced.

b. Effects of Various Options

There are no known options for a standard claims status and response transaction.

5. Specific Impact of Adoption of the ASC X12N 834 for Enrollment and Disenrollment in a Health Plan

a. Affected Entities

The ASC X12N 834 may be used by an employer or other sponsor to electronically enroll or disenroll its subscribers into or out of a health plan. Currently, most small and medium size employers and other sponsors conduct their subscriber enrollments using paper forms. (We cannot quantify how many of these sponsors use paper forms, but anecdotal information indicates that most use paper.) We understand that large employers and other sponsors are more likely to conduct subscriber enrollment transactions electronically because of the many changes that occur in a large workforce; for example, hirings, firings, retirements, marriages, births, and deaths, to name a few. To do this, the large employers must use the proprietary electronic data interchange formats that differ among health plans. Nonetheless, it is our understanding, based on anecdotal information, that health plans still use paper to conduct most of their enrollment transactions.

We expect that the impact of the ASC X12N 834 transaction standard would differ, at least in the beginning, according to the current use of electronic transactions. As stated earlier, most small and medium size employers and other sponsors do not use electronic transactions currently and would therefore experience little immediate impact from adoption of the ASC X12N 834 transaction. The ASC X12N 834 would offer large employers that currently conduct enrollment transactions electronically the opportunity to shift to a single standard format. A single standard will be most attractive to those large employers that offer their subscribers choices among multiple health plans. Thus, we expect that the early benefits of the ASC X12N 834 would accrue to large employers and other sponsors that would be able to eliminate redundant hardware, software, and human resources required to support multiple proprietary electronic data interchange formats. In the long run, we expect that the standards would lower the cost of conducting enrollment transactions and make it possible for small and medium size companies to convert from paper to electronic transactions and achieve significant additional savings.

Overall, employers and other sponsors, and the health plans with which they deal, stand to benefit from adoption of the ASC X12N 834 and electronic data interchange. The ASC X12N 834 and electronic data interchange would facilitate the performance of enrollment and disenrollment functions. Further, the ASC X12N 834 supports detailed enrollment information on the subscriber's dependents, which is often lacking in current practice. Ultimately, reductions in administrative overhead may be passed along in lower premiums to subscribers and their dependents.

We invite commenters to provide us with data on the extent to which

employers and other sponsors conduct their health plan enrollments using paper proprietary formats rather than the ASC X12N 834 electronic data interchange standards.

b. Effects of Various Options

The only other option, the NCPDP Member Enrollment Standard, does not meet the selection criteria and would not be implementable.

6. Specific Impact of Adoption of the ASC X12N 270/271 for Eligibility for a Health Plan

a. Affected Entities

The ASC X12N 270/271 transaction may be used by a health care provider to electronically request and receive eligibility information from a health care plan prior to providing or billing for a health care service. Many health care providers routinely verify health insurance coverage and benefit limitations prior to providing treatment or before preparing claims for submission to the insured patient and his or her health plan. Currently, health care providers secure most of these eligibility determinations through telephone calls, proprietary point of sale terminals, or using proprietary electronic formats that differ from health plan to health plan. Since many health care providers participate in multiple health plans, these health care providers must maintain redundant software, hardware, and human resources to obtain eligibility information. This process is inefficient, often burdensome, and takes valuable time that could otherwise be devoted to patient care.

We believe that the lack of a health care industry standard may have imposed a cost barrier to the widespread use of electronic data interchange. The ASC X12N 270/271 is used widely, but not exclusively, by health care plans and health care providers. This may be due, in part, to the lack of an industry-wide implementation guide for these transactions in health care. We expect that adoption of the ASC X12N 270/271 and its implementation guide would lower the cost of using electronic eligibility verifications. This would benefit health care providers that can move to a single standard format and, for the first time, make electronic data interchange feasible for small health plans and health care providers that rely currently on the telephone, paper forms, or proprietary point of sale terminals and software.

b. Effect of Various Options

There were two other options, the ASC X12N IHCEBI, and its companion, IHCEBR, and the NCPDP Telecommunications Standard Format. None of these meet the selection criteria and thus they would not be implementable.

7. Specific Impact of Adoption of the ASC X12N 820 for Payroll Deducted and Other Group Premium Payment for Insurance Product

a. Affected Entities

The ASC X12N 820 may be used by an employer or sponsor to electronically transmit a remittance notice to accompany a payment for health insurance premiums in response to a bill from the health plan. Payment may be in the form of a paper check or an electronic funds transfer transaction. The ASC X12N 820 can be sent with electronic funds transfer instructions that are routed directly to the Federal Reserve System's automated health care clearinghouses or with payments generated directly by the employer's or other sponsor's bank. The ASC X12 820 transaction is very widely used by many industries (manufacturing, for instance) and government agencies (Department of Defense) in addition to the insurance industry in general. However, the ASC X12N 820 is not widely used in the health insurance industry and is not widely used by employers and other sponsors to make premium payments to their health insurers. This may be due, in part, to the lack of an implementation guide specifically for health insurance.

Currently, most payment transactions are conducted on paper, and those that are conducted electronically use proprietary electronic data interchange standards that differ across health plans. (We cannot quantify how many of these transactions are conducted on paper, but anecdotal information suggests that most are.) We believe that the lack of a health care industry standard may have imposed a cost barrier to the use of electronic data interchange; larger employers and other sponsors, that often transact business with multiple health plans, need to retain redundant hardware, software, and human resources to support multiple proprietary electronic premium payment standards. We expect that adoption of national standards will lower the cost of using electronic premium payments. This will benefit large employers that can move to a single standard format, and, for the first time, will make electronic transmissions of premium payments feasible for smaller employers and other sponsors whose payment transactions today are performed almost exclusively using paper.

At some point, an organization's size and complexity will require it to consider switching its business transactions from paper to electronic. The ASC X12N 820 would facilitate that by eliminating redundant proprietary formats that are certain to crop up when there are no widely accepted standards. By eliminating the software, hardware, and human resources associated with redundancy, a business may reach the point where it becomes cost beneficial to convert from paper to electronic transactions. Those other sponsors and health care plans that already support more than one proprietary format would incur some additional expense in the conversion to the standard, but they would enjoy longer term savings that result from eliminating the redundancies.

We invite comments on the extent to which employers and other sponsors conduct their health plan premium payments using paper versus proprietary formats, compared to the ASC X12N 820 electronic data interchange standards.

b. Effects of Various Options

There are no known options for premium payment transactions.

8. Specific Impact of Adoption of ASC X12N 278 for Referral Certification and Authorization

a. Affected Entities

The ASC X12N 278 may be used by a health care provider to request and receive approval from a health plan through an electronic transaction prior to providing a health care service. Prior approvals have become standard operating procedure for most hospitals, physicians and other health care providers due to the rapid growth of managed care. Health care providers secure most of their prior approvals through telephone calls, paper forms or proprietary electronic formats that differ from health plan to health plan. Since many health care providers participate in multiple managed care plans, they must devote redundant software, hardware, and human resources to obtaining prior authorization. This process is often untimely and inefficient.

We believe that the lack of a health care industry standard may have imposed a cost barrier to the widespread use of electronic data interchange. The ASC X12N 278 is not widely used by health care plans and health care providers, which may be due, in part, to the lack of an industry-wide implementation guide for it. We expect that adoption of ASC X12N 278 and its

implementation guide would lower the cost of using electronic prior authorizations. This would benefit health care providers that can move to a single standard format and, for the first time, make electronic data interchange feasible for smaller health plans and health care providers that perform these transactions almost exclusively using the telephone or paper.

At some point, an organization's size and complexity will require it to consider switching its business transactions from paper to electronic. The ASC X12N 278 would facilitate that by eliminating redundant proprietary formats that are certain to crop up when there are no widely accepted standards. By eliminating the software, hardware, and human resources associated with redundancy, a business may reach the point where it becomes cost beneficial to convert from paper to electronic transactions. Health care plans and health care providers that already support more than one proprietary format would incur some additional expense in the conversion to the standard but would enjoy longer term savings that result from eliminating the redundancies.

b. Effects of Various Options

There are no known options for referral and certification authorization transactions.

List of Subjects in 45 CFR Part 142

Administrative practice and procedure, Health facilities, Health insurance, Hospitals, Incorporation by reference, Medicare, Medicaid.

Accordingly, 45 CFR subtitle A, subchapter B, would be amended by adding Part 142 to read as follows:

Note to Reader: This proposed rule and another proposed rule found elsewhere in this **Federal Register** are two of several proposed rules that are being published to implement the administrative simplification provisions of the Health Insurance Portability and Accountability Act of 1996. We propose to establish a new 45 CFR Part 142. Proposed Subpart A—General Provisions is exactly the same in each rule unless we have added new sections or definitions to incorporate additional general information. The subparts that follow relate to the specific provisions announced separately in each proposed rule. When we publish the first final rule, each subsequent final rule will revise or add to the text that is set out in the first final rule.

PART 142—ADMINISTRATIVE REQUIREMENTS

Subpart A—General Provisions

Sec.
142.101 Statutory basis and purpose.
142.102 Applicability.
142.103 Definitions.
142.104 General requirements for health plans.
142.105 Compliance using a health care clearinghouse.
142.106 Effective dates of a modification to a standard or implementation specification.
142.110 Availability of implementation guides.

Subparts B–I—[Reserved]

Subpart J—Code Sets

142.1002 Medical data code sets.
142.1004 Code sets for nonmedical data elements.
142.1010 Effective dates of the initial implementation of code sets.

Subpart K—Health Claims or Equivalent Encounter Information

142.1102 Standards for health claims or equivalent encounter information.
142.1104 Requirements: Health plans.
142.1106 Requirements: Health care clearinghouses.
142.1108 Requirements: Health care providers.
142.1110 Effective dates of the initial implementation of the health claim or equivalent encounter information.

Subpart L—Health Claims and Remittance Advice

142.1202 Standard for health claims and remittance advice.
142.1204 Requirements: Health plans.
144.1206 Requirements: Health care clearinghouses.
142.1210 Effective dates of the initial implementation of the health claims and remittance advice.

Subpart M—Coordination of Benefits

142.1302 Standard for coordination of benefits.
142.1304 Requirements: Health plans.
144.1306 Requirements: Health care clearinghouses.
142.1308 Effective dates of the initial implementation of the standard for coordination of benefits.

Subpart N—Health Claim Status

142.1402 Standard for health claim status.
142.1404 Requirements: Health plans.
144.1406 Requirements: Health care clearinghouses.
142.1408 Requirements: Health care providers.
142.1410 Effective dates of the initial implementation of the standard for health claims status.

Subpart O—Enrollment and Disenrollment in a Health Plan

142.1502 Standard for enrollment and disenrollment in a health plan.
142.1504 Requirements: Health plans.
144.1506 Requirements: Health care clearinghouses.
142.1508 Effective dates of the initial implementation of the standard for enrollment and disenrollment in a health plan.

Subpart P—Eligibility for a Health Plan

142.1602 Standard for eligibility for a health plan.
142.1604 Requirements: Health plans.
144.1606 Requirements: Health care clearinghouses.
142.1608 Requirements: Health care providers.
142.1610 Effective dates of the initial implementation of the standard for eligibility for a health plan.

Subpart Q—Health Plan Premium Payments

142.1702 Standard for health plan premium payments.
142.1704 Requirements: Health plans.
144.1706 Requirements: Health care clearinghouses.
142.1708 Effective dates of the initial implementation of the standard for health plan premium payments.

Subpart R—Referral Certification and Authorization

142.1802 Referral certification and authorization.
142.1804 Requirements: Health plans.
144.1806 Requirements: Health care clearinghouses.
142.1808 Requirements: Health care providers.
142.1810 Effective dates of the initial implementation of the standard for referral certifications and authorizations.

Authority: Sections 1173 and 1175 of the Social Security Act (42 U.S.C. 1320d–2 and 1320d–4)

Subpart A—General Provisions

§ 142.101 Statutory basis and purpose.

Sections 1171 through 1179 of the Social Security Act, as added by section 262 of the Health Insurance Portability and Accountability Act of 1996, require HHS to adopt national standards for the electronic exchange of health information in the health information system. The purpose of these sections is to promote administrative simplification.

§ 142.102 Applicability.

(a) The standards adopted or designated under this part apply, in whole or in part, to the following:

(1) A health plan.

(2) A health care clearinghouse when doing the following:

(i) Transmitting a standard transaction (as defined in § 142.103) to a health care provider or health plan.

(ii) Receiving a standard transaction from a health care provider or health plan.

(iii) Transmitting and receiving the standard transactions when interacting with another health care clearinghouse.

(3) A health care provider when transmitting an electronic transaction as defined in § 142.103.

(b) Means of compliance are stated in greater detail in § 142.105.

§ 142.103 Definitions.

For purposes of this part, the following definitions apply:

ASC X12 stands for the Accredited Standards Committee chartered by the American National Standards Institute to design national electronic standards for a wide range of business applications.

ASC X12N stands for the ASC X12 subcommittee chartered to develop electronic standards specific to the insurance industry.

Code set means any set of codes used for encoding data elements, such as tables of terms, medical concepts, medical diagnostic codes, or medical procedure codes.

Health care clearinghouse means a public or private entity that processes or facilitates the processing of nonstandard data elements of health information into standard data elements. The entity receives transactions from health care providers, health plans, other entities, or other clearinghouses, translates the data from a given format into one acceptable to the intended recipient, and forwards the processed transaction to the appropriate recipient. Billing services, repricing companies, community health management information systems, community health information systems, and ''value-added'' networks and switches are considered to be health care clearinghouses for purposes of this part.

Health care provider means a provider of services as defined in section 1861(u) of the Social Security Act, a provider of medical or other health services as defined in section 1861(s) of the Social Security Act, and any other person who furnishes or bills and is paid for health care services or supplies in the normal course of business.

Health information means any information, whether oral or recorded in any form or medium, that—

(1) Is created or received by a health care provider, health plan, public health authority, employer, life insurer, school or university, or health care clearinghouse; and

(2) Relates to the past, present, or future physical or mental health or condition of an individual, the provision of health care to an individual, or the past, present, or future payment for the provision of health care to an individual.

Health plan means an individual or group plan that provides, or pays the cost of, medical care. Health plan includes the following, singly or in combination:

(1) Group health plan. A group health plan is an employee welfare benefit plan (as currently defined in section 3(l) of the Employee Retirement Income and Security Act of 1974 (29 U.S.C. 1002(l)), including insured and self-insured plans, to the extent that the plan provides medical care, including items and services paid for as medical care, to employees or their dependents directly or through insurance, or otherwise, and

(i) Has 50 or more participants; or

(ii) Is administered by an entity other than the employer that established and maintains the plan.

(2) Health insurance issuer. A health insurance issuer is an insurance company, insurance service, or insurance organization that is licensed to engage in the business of insurance in a State and is subject to State law that regulates insurance.

(3) Health maintenance organization. A health maintenance organization is a Federally qualified health maintenance organization, an organization recognized as a health maintenance organization under State law, or a similar organization regulated for solvency under State law in the same manner and to the same extent as such a health maintenance organization.

(4) Part A or Part B of the Medicare program under title XVIII of the Social Security Act.

(5) The Medicaid program under title XIX of the Social Security Act.

(6) A Medicare supplemental policy (as defined in section 1882(g)(1) of the Social Security Act).

(7) A long-term care policy, including a nursing home fixed-indemnity policy.

(8) An employee welfare benefit plan or any other arrangement that is established or maintained for the purpose of offering or providing health benefits to the employees of two or more employers.

(9) The health care program for active military personnel under title 10 of the United States Code.

(10) The veterans health care program under 38 U.S.C., chapter 17.

(11) The Civilian Health and Medical Program of the Uniformed Services (CHAMPUS), as defined in 10 U.S.C. 1072(4).

(12) The Indian Health Service program under the Indian Health Care Improvement Act (25 U.S.C. 1601 *et seq.*).

(13) The Federal Employees Health Benefits Program under 5 U.S.C. chapter 89.

(14) Any other individual or group health plan, or combination thereof, that provides or pays for the cost of medical care.

Medical care means the diagnosis, cure, mitigation, treatment, or prevention of disease, or amounts paid for the purpose of affecting any body structure or function of the body; amounts paid for transportation primarily for and essential to these items; and amounts paid for insurance covering the items and the transportation specified in this definition.

Participant means any employee or former employee of an employer, or any member or former member of an employee organization, who is or may become eligible to receive a benefit of any type from an employee benefit plan that covers employees of that employer or members of such an organization, or whose beneficiaries may be eligible to receive any of these benefits. ''Employee'' includes an individual who is treated as an employee under section 401(c)(1) of the Internal Revenue Code of 1986 (26 U.S.C. 401(c)(1)).

Small health plan means a group health plan or individual health plan with fewer than 50 participants.

Standard means a set of rules for a set of codes, data elements, transactions, or identifiers promulgated either by an organization accredited by the American National Standards Institute or HHS for the electronic transmission of health information.

Transaction means the exchange of information between two parties to carry out financial and administrative activities related to health care. It includes the following:

(1) Transactions specified in section 1173(a)(2) of the Act, which are as follows:

(i) Health claims or equivalent encounter information.

(ii) Health care payment and remittance advice.

(iii) Health claims status.

(iv) Enrollment and disenrollment in a health plan.

(v) Eligibility for a health plan.

(vi) Health plan premium payments.

(vii) First report of injury.

(viii) Referral certification and authorization.

(ix) Health claims attachments.

(2) Other transactions as the Secretary may prescribe by regulation. Coordination of benefits is a transaction under this authority.

§ 142.104 General requirements for health plans.

If a person conducts a transaction (as defined in § 142.103) with a health plan as a standard transaction, the following apply:

(a) The health plan may not refuse to conduct the transaction as standard transaction.

(b) The health plan may not delay the transaction or otherwise adversely

affect, or attempt to adversely affect, the person or the transaction on the basis that the transaction is a standard transaction.

(c) The health information transmitted and received in connection with the transaction must be in the form of standard data elements of health information.

(d) A health plan that conducts transactions through an agent must assure that the agent meets all the requirements of this part that apply to the health plan.

§ 142.105 Compliance using a health care clearinghouse.

(a) Any person or other entity subject to the requirements of this part may meet the requirements to accept and transmit standard transactions by either—

(1) Transmitting and receiving standard data elements, or

(2) Submitting nonstandard data elements to a health care clearinghouse for processing into standard data elements and transmission by the health care clearinghouse and receiving standard data elements through the health care clearinghouse.

(b) The transmission, under contract, of nonstandard data elements between a health plan or a health care provider and its agent health care clearinghouse is not a violation of the requirements of this part.

§ 142.106 Effective dates of a modification to a standard or implementation specification.

If HHS adopts a modification to a standard or implementation specification, the implementation date of the modified standard or implementation specification may be no earlier than 180 days following the adoption of the modification. HHS determines the actual date, taking into account the time needed to comply due to the nature and extent of the modification. HHS may extend the time for compliance for small health plans.

§ 142.110 Availability of implementation guides.

The implementation guides specified in subparts K through R of this part are available as set forth in paragraphs (a) through (c) of this section. Entities requesting copies or access for inspection must specify the standard by name, number, and version.

(a) The implementation guides for ASC X12 standards may be obtained from the Washington Publishing Company, 806 W. Diamond Ave., Suite 400, Gaithersburg, MD, 20878; telephone 301–590–9337; and FAX: 301–869–9460. They are also available, at no cost, through the Washington Publishing Company on the Internet at http://www.wpc-edi.com/hipaa/.

(b) The implementation guide for pharmacy claims may be obtained from the National Council for Prescription Drug Programs, 4201 North 24th Street, Suite 365, Phoenix, AZ, 85016; telephone 602–957–9105; and FAX 602–955–0749. It may also be obtained through the Internet at http://www.ncpdp.org.

(c) A copy of the guides may be inspected at the Office of the Federal Register, 800 North Capitol Street, NW., Suite 700, Washington, DC and at the Health Care Financing Administration.

Subparts B–I—[Reserved]

Subpart J—Code Sets

§ 142.1002 Medical data code sets.

Health plans, health care clearinghouses, and health care providers must use on electronic transactions the diagnostic and procedure code sets as prescribed by HHS. These code sets are published in a notice in the **Federal Register**. The implementation guides for the transaction standards in part 142, Subparts K through R specify which of the standard medical data code sets are to be used in individual data elements within those transaction standards.

§ 142.1004 Code sets for nonmedical data elements.

The code sets for nonmedical data that must be used in a transaction specified in subparts K through R of this part are the code sets described in the implementation guide for the transaction standard.

§ 142.1010 Effective dates of the initial implementation of code sets.

(a) *Health plans.* (1) Each health plan that is not a small health plan must comply with the requirements of §§ 142.104, 142.1002, and 142.1004 by (24 months after the effective date of the final rule in the **Federal Register**).

(2) Each small health plan must comply with the requirements of §§ 142.104, 142.1002, and 142.1004 by [36 months after the effective date of the final rule in the **Federal Register**].

(b) *Health care clearinghouses and health care providers.* Each health care clearinghouse and health care provider must begin to use the standards specified in §§ 142.1002 and 142.1004 by (24 months after the effective date of the final rule in the **Federal Register**).

Subpart K—Health Claims or Equivalent Encounter Information

§ 142.1102 Standards for health claims or equivalent encounter information.

The health claims or equivalent encounter information standards that must be used under this subpart are as follows:

(a) For pharmacy claims, the NCPDP Telecommunications Standard Format Version 3.2 and equivalent Standard Claims Billing Tape Format batch implementation, version 2.0. The Director of the Federal Register approves this incorporation by reference in accordance with 5 U.S.C. 552(a) and 1 CFR part 51. The guide is available at the addresses specified in § 142.108(b) and (c) of this part.

(b) The ASC X12N 837—Health Care Claim: Dental, Version 4010, Washington Publishing Company, 004010X097. The Director of the Federal Register approves this incorporation by reference in accordance with 5 U.S.C. 552(a) and 1 CFR part 51. The guide is available at the addresses specified in § 142.108(a) and (c) of this part.

(c) The ASC X12N 837—Health Care Claim: Professional, Version 4010, Washington Publishing Company, 004010X098. The Director of the Federal Register approves this incorporation by reference in accordance with 5 U.S.C. 552(a) and 1 CFR part 51. The guide is available at the addresses specified in § 142.108(a) and (c) of this part.

(d) The ASC X12N 837—Health Care Claim—Institutional, Version 4010, Washington Publishing Company, 004010X096. The Director of the Federal Register approves this incorporation by reference in accordance with 5 U.S.C. 552(a) and 1 CFR part 51. The guide is available at the addresses specified in § 142.108(a) and (c) of this part.

§ 142.1104 Requirements: Health plans.

Each health plan must accept the standard specified in § 142.1102 when conducting transactions concerning health claims and equivalent encounter information.

§ 142.1106 Requirements: Health care clearinghouses.

Each health care clearinghouse must use the standard specified in § 142.1102 when accepting or transmitting health claims or equivalent encounter information transactions.

§ 142.1108 Requirements: Health care providers.

Any health care provider that transmits health claims or equivalent encounter information electronically must use the standard specified in § 142.1102.

§ 142.1110 Effective dates of the initial implementation of the health claim or equivalent encounter information standard.

(a) *Health plans.* (1) Each health plan that is not a small health plan must comply with the requirements of §§ 142.104 and 142.1104 by (24 months after the effective date of the final rule in the **Federal Register**).

(2) Each small health plan must comply with the requirements of §§ 142.104 and 142.1104 by (36 months after the effective date of the final rule in the **Federal Register**).

(b) *Health care clearinghouses and health care providers.* Each health care clearinghouse and health care provider must begin to use the standard specified in § 142.1102 by (24 months after the effective date of the final rule in the **Federal Register**).

Subpart L—Health Claims and Remittance Advice

§ 142.1202 Standard for health claims and remittance advice.

The standard for health claims and remittance advice that must be used under this subpart is the ASC X12N 835—Health Care Claim Payment/Advice, Version 4010, Washington Publishing Company, 004010X091. The Director of the Federal Register approves this incorporation by reference in accordance with 5 U.S.C. 552(a) and 1 CFR part 51. The guide is available at the addresses specified in § 142.108(a) and (c) of this part.

§ 142.1204 Requirements: Health plans.

Each health plan must transmit the standard specified in § 142.1202 when conducting health claims and remittance advice transactions.

§ 142.1206 Requirements: Health care clearinghouses.

Each health care clearinghouse must use the standard specified in § 142.1202 when accepting or transmitting health claims and remittance advice.

§ 142.1210 Effective dates of the initial implementation of the health claims and remittance advice.

(a) *Health plans.* (1) Each health plan that is not a small health plan must comply with the requirements of §§ 142.104 and 142.1204 by (24 months after the effective date of the final rule in the **Federal Register**).

(2) Each small health plan must comply with the requirements of §§ 142.104 and 142.1204 by (36 months after the effective date of the final rule in the **Federal Register**).

(b) *Health care clearinghouses.* Each health care clearinghouse must begin to use the standard specified in § 142.1204 by (24 months after the effective date of the final rule in the **Federal Register**).

Subpart M—Coordination of Benefits

§ 142.1302 Standard for coordination of benefits.

The coordination of benefits information standards that must be used under this subpart are as follows:

(a) For pharmacy claims, the NCPDP Telecommunications Standard Format Version 3.2 and equivalent Standard Claims Billing Tape Format batch implementation, version 2.0. The Director of the Federal Register approves this incorporation by reference in accordance with 5 U.S.C. 552(a) and 1 CFR part 51. The guide is available at the addresses specified in § 142.108(b) and (c) of this part.

(b) For dental claims, the ASC X12N 837—Health Care Claim: Dental, Version 4010, Washington Publishing Company, 004010X097. The Director of the **Federal Register** approves this incorporation by reference in accordance with 5 U.S.C. 552(a) and 1 CFR part 51. The guide is available at the addresses specified in § 142.108(a) and (c) of this part.

(c) For professional claims, the ASC X12N 837—Health Care Claim: Professional, Version 4010, Washington Publishing Company, 004010X098. The Director of the Federal Register approves this incorporation by reference in accordance with 5 U.S.C. 552(a) and 1 CFR part 51. The guide is available at the addresses specified in § 142.108(a) and (c) of this part.

(d) For institutional claims, the ASC X12N 837—Health Care Claim—Institutional, Version 4010, Washington Publishing Company, 004010X096. The Director of the Federal Register approves this incorporation by reference in accordance with 5 U.S.C. 552(a) and 1 CFR part 51. The guide is available at the addresses specified in § 142.108(a) and (c) of this part.

§ 142.1304 Requirements: Health plans.

Each health plan that performs coordination of benefits must accept and transmit the standard specified in § 142.1302 when accepting or transmitting coordination of benefits transactions.

§ 142.1306 Requirements: Health care clearinghouses.

Each health care clearinghouse must use the standard specified in § 142.1302 when accepting or transmitting coordination of benefits transactions.

§ 142.1308 Effective dates of the initial implementation of the standard for coordination of benefits.

(a) *Health plans.* (1) Each health plan that performs coordination of benefits and is not a small health plan must comply with the requirements of §§ 142.104 and 142.1304 by (24 months after the effective date of the final rule in the **Federal Register**).

(2) Each small health plan that performs coordination of benefits must comply with the requirements of §§ 142.104 and 142.1304 by (36 months after the effective date of the final rule in the **Federal Register**).

(b) *Health care clearinghouses.* Each health care clearinghouse must begin to use the standard specified in § 142.1302 by (24 months after the effective date of the final rule in the **Federal Register**).

Subpart N—Health Claim Status

§ 142.1402 Standard for health claim status.

The standard for health claim status that must be used under this subpart is the ASC X12N 276/277 Health Care Claim Status Request and Response, Version 4010, Washington Publishing Company, 004010X093. The Director of the Federal Register approves this incorporation by reference in accordance with 5 U.S.C. 552(a) and 1 CFR part 51. The guide is available at the addresses specified in § 142.108(a) and (c) of this part.

§ 142.1404 Requirements: Health plans.

Each health plan must accept and transmit the standard specified in § 142.1402 when accepting or transmitting health claim status in transactions with health care providers.

§ 142.1406 Requirements: Health care clearinghouses.

Each health care clearinghouse must use the standard specified in § 142.1402 when accepting or transmitting health claims status transactions.

§ 142.1408 Requirements: Health care providers.

Any health care provider that transmits or accepts health claims status electronically must use the standard specified in § 142.1402.

§ 142.1410 Effective dates of the initial implementation of the standard for health claims status.

(a) *Health plans.* (1) Each health plan that is not a small health plan must comply with the requirements of §§ 142.104 and 142.1404 by (24 months after the effective date of the final rule in the **Federal Register**).

(2) Each small health plan must comply with the requirements of

§§ 142.104 and 142.1404 by (36 months after the effective date of the final rule in the **Federal Register**).

(b) *Health care clearinghouses and health care providers.* Each health care clearinghouse and health care provider must begin to use the standard specified in § 142.1402 by (24 months after the effective date of the final rule in the **Federal Register**).

Subpart O—Enrollment and Disenrollment in a Health Plan

§ 142.1502 Standard for enrollment and disenrollment in a health plan.

The standard for enrollment and disenrollment in a health plan that must be used under this subpart is the ASC X12 834—Benefit Enrollment and Maintenance, [date], Version 4010, Washington Publishing Company, (004010X095). The Director of the Federal Register approves this incorporation by reference in accordance with 5 U.S.C. 552(a) and 1 CFR part 51. The guide is available at the addresses specified in § 142.110(a) and (c).

§ 142.1504 Requirements: Health plans.

Each health plan must accept the standard specified in § 142.1502 when accepting transactions for enrollment and disenrollment in a health plan.

§ 142.1506 Requirements: Health care clearinghouses.

Each health care clearinghouse must use the standard specified in § 142.1502 when accepting or transmitting transactions for enrollment and disenrollment in a health plan.

§ 142.1508 Effective dates of the initial implementation of the standard for enrollment and disenrollment in a health plan.

(a) *Health plans.* (1) Each health plan that is not a small health plan must comply with the requirements of §§ 142.104 and 142.1504 by (24 months after the effective date of the final rule in the **Federal Register**).

(2) Each small health plan must comply with the requirements of §§ 142.104 and 142.1504 by (36 months after the effective date of the final rule in the **Federal Register**).

(b) *Health care clearinghouses.* Each health care clearinghouse must begin to use the standard specified in § 142.1502 by (24 months after the effective date of the final rule in the **Federal Register**).

Subpart P—Eligibility for a Health Plan

§ 142.1602 Standard for eligibility for a health plan.

The standard for eligibility for a health plan transaction that must be used under this subpart is ASC X12N 270—Health Care Eligibility Benefit Inquiry and ASC X12N 271—Health Care Eligibility Benefit Response, [date], Version 4010, Washington Publishing Company, (004010X092). The Director of the Federal Register approves this incorporation by reference in accordance with 5 U.S.C. 552(a) and 1 CFR part 51. The guide is available at the addresses specified in § 142.108(a) and (c) of this part.

§ 142.1604 Requirements: Health plans.

Each health plan must accept and transmit the standard specified in § 142.1602 when accepting or transmitting transactions for eligibility for a health plan.

§ 142.1606 Requirements: Health care clearinghouses.

Each health care clearinghouse must use the standard specified in § 142.1602 when accepting or transmitting transactions for eligibility for a health plan.

§ 142.1608 Requirements: Health care providers.

Any health care provider that transmits or receives transactions for eligibility for a health plan electronically must use the standard specified in § 142.1602.

§ 142.1610 Effective dates of the initial implementation of the standard for eligibility for a health plan.

(a) *Health plans.* (1) Each health plan that is not a small health plan must comply with the requirements of §§ 142.104 and 142.1604 by (24 months after the effective date of the final rule in the **Federal Register**).

(2) Each small health plan must comply with the requirements of §§ 142.104 and 142.1604 by (36 months after the effective date of the final rule in the **Federal Register**).

(b) *Health care clearinghouses and health care providers.* Each health care clearinghouse and health care provider must begin to use the standard specified in § 142.1602 by (24 months after the effective date of the final rule in the **Federal Register**).

Subpart Q—Health Plan Premium Payments

§ 142.1702 Standard for health plan premium payments.

The standard for health plan premium payments that must be used under this subpart is the ASC X12 820—Payment Order/Remittance Advice, (date), Version 4010, Washington Publishing Company, (004010X061). The Director of the Federal Register approves this incorporation by reference in accordance with 5 U.S.C. 552(a) and 1 CFR part 51. The guide is available at the addresses specified in § 142.108(a) and (c) of this part.

§ 142.1704 Requirements: Health plans.

Each health plan must accept the standard specified in § 142.1702 when accepting electronically transmitted health plan premium payments.

§ 142.1706 Requirements: Health care clearinghouses.

Each health care clearinghouse must use the standard specified in § 142.1702 when accepting or transmitting health plan premium payments.

§ 142.1708 Effective dates of the initial implementation of the standard for health plan premium payments.

(a) *Health plans.* (1) Each health plan that is not a small health plan must comply with the requirements of §§ 142.104 and 142.1704 by (24 months after the effective date of the final rule in the **Federal Register**).

(2) Each small health plan must comply with the requirements of §§ 142.104 and 142.1704 by (36 months after the effective date of the final rule in the **Federal Register**).

(b) *Health care clearinghouses.* Each health care clearinghouse must begin to the use the standard specified in § 142.1702 by (24 months after the effective date of the final rule in the **Federal Register**).

Subpart R—Referral Certification and Authorization

§ 142.1802 Referral certification and authorization.

The standard for referral certification and authorization transactions that must be used under this subpart is the ASC X12N 278—Request for Review and Response, (date), Version 4010, Washington Publishing Company, (004010X094). The Director of the Federal Register approves this incorporation by reference in accordance with 5 U.S.C. 552(a) and 1 CFR part 51. The guide is available at the addresses specified in § 142.108(a) and (c) of this part.

§ 142.1804 Requirements: Health plans.

Each health plan must accept and transmit the standard specified in § 142.1802 when accepting or transmitting referral certifications and authorizations.

§ 142.1806 Requirements: Health care clearinghouses.

Each health care clearinghouse must use the standard specified in § 142.1902

when accepting or transmitting referral certifications and authorizations.

§ 142.1808 Requirements: Health care providers.

Any health care provider that transmits or accepts referral certifications and authorizations electronically must use the standard specified in § 142.1902.

§ 142.1810 Effective dates of the initial implementation of the standard for referral certifications and authorizations.

(a) *Health plans.* (1) Each health plan that is not a small health plan must comply with the requirements of §§ 142.104 and 142.1804 by (24 months after the effective date of the final rule in the **Federal Register**).

(2) Each small health plan must comply with the requirements of §§ 142.104 and 142.1804 by (36 months after the effective date of the final rule in the **Federal Register**).

(b) *Health care clearinghouses and health care providers.* Each health care clearinghouse and health care provider must begin to use the standard specified in § 142.1802 by (24 months after the effective date of the final rule in the **Federal Register**).

Dated: March 27, 1998.

Donna E. Shalala,

Secretary.

Note: These Addenda will not appear in the Code of Federal Regulations.

Addendum 1—Health Claims or Equivalent Encounter Information

A. Retail Drug Claim or Equivalent Encounter

The transactions selected for retail drug claims are accredited by the American National Standards Institute (ANSI). The transactions are: NCPDP Telecommunications Standard Format version 3.2 and the equivalent NCPDP Batch Standard Version 1.0.

1. Implementation Guide and Source

The source of the implementation guide for the NCPDP Telecommunication Standard Format Version 3.2 and the equivalent NCPDP Batch Standard Version 1.0 is the National Council for Prescription Drug Programs, 4201 North 24th Street, Suite 365, Phoenix, AZ, 85016, Telephone 602–957–9105, FAX 602–955–0749. The web site address is http://www.ncpdp.org

2. Data Elements

Accumulated Deductible Amount
Additional Message Information
Adjustment/reject Code—1
Adjustment/reject Code—2
Adjustment/reject Code—3
Alternate Product Code
Alternate Product Type
Amount Attributed to Sales Tax
Amount Billed
Amount of Co-pay/co-insurance
Amount Rejected
Amt. Applied to Periodic Deduct
Amt. Attrib. To Prod. Selection
Amt. Exceed. Periodic Benefit Max
Authorization Number
Basis of Cost Determination
Basis of Days Supply Determination
Basis of Reimb. Determination
Batch Number
Bin Number
Cardholder First Name
Cardholder Id Number
Cardholder Last Name
Carrier Address
Carrier Correction Notice Fields
Carrier Identification Number
Carrier Location City
Carrier Location State
Carrier Name
Carrier Telephone Number
Carrier Zip Code
Claim Count
Claim/reference Id Number
Clinic Id Number
Co-pay Amount
Comments-1
Comments-2
Compound Code
Contract Fee Paid
Customer Location
Date Filled
Date of Birth
Date of Injury
Date Prescription Written
Days Supply
Destination Name
Destination Processor Number
Diagnosis Code
Diskette Record Id
Dispense as Written (Daw)
Dispensing Fee Submitted
Dollar Count
Dollars Adjusted
Dollars Billed
Dollars Rejected
Drug Name
Drug Type
Dur Conflict Code
Dur Intervention Code
Dur Outcome Code
Dur Response Data
Eligibility Clarification Code
Employer City Address
Employer Contact Name
Employer Name
Employer Phone Number
Employer State Address
Employer Street Address
Employer Zip Code
Fee or Markup
Gross Amount Due
Group Number
Home Plan
Host Plan
Incentive Amount Submitted
Incentive Fee Paid
Ingredient Cost Billed
Ingredient Cost Paid
Ingredient Cost
Level of Service
Master Sequence Number
Message
Metric Decimal Quantity
Metric Quantity
Ndc Number
New/refill Code
Number of Refills Authorized
Other Coverage Code
Other Payor Amount
Patient City Address
Patient First Name
Patient Last Name
Patient Paid Amount
Patient Pay Amount
Patient Phone Number
Patient Social Security
Patient State Address
Patient Street Address
Patient Zip Code
Payment Processor Id
Person Code
Pharmacy Address
Pharmacy Count
Pharmacy Location City
Pharmacy Location State
Pharmacy Name
Pharmacy Number
Pharmacy Telephone Number
Pharmacy Zip Code
Plan Identification
Postage Amount Claimed
Postage Amount Paid
Prescriber Id
Prescriber Last Name
Prescription Denial Clarification
Prescription Number
Prescription Origin Code
Primary Prescriber
Prior Authorization/medical Certification Code And Number
Processor Address
Processor Control Number
Processor Location City
Processor Location State
Processor Name
Processor Number
Processor Telephone Number
Processor Zip Code
Record Identifier
Reject Code
Reject Count
Relationship Code
Remaining Benefit Amount
Remaining Deductible Amount
Response Data
Response Status
Resubmission Cycle Count
Run Date
Sales Tax Paid
Sales Tax
Sex Code
System Id
Terminal Id
Third Party Type
Total Amount Paid
Transaction Code
Unit Dose Indicator
Usual And Customary Charge
Version Release Number

B. Professional Health Claim or Equivalent Encounter

The transaction selected for the professional (non-institutional) health claim or equivalent encounter information is ASC X12N 837—Health Care Claim: Professional (004010X098)

1. Implementation Guide and Source

The source of the implementation guide for the professional health care claim or equivalent encounter is: Washington Publishing Company, 806 W. Diamond Ave., Suite 400, Gaithersburg, MD, 20878, Telephone 301–590–9337, FAX: 301–869–

9460. The web site address is http://www.wpc-edi.com/hipaa/

2. Data Elements

Accident Date
Acute Manifestation Date
Additional Submitter or Receiver Name
Adjudication or Payment Date
Adjusted Repriced Claim Reference Number
Adjusted Repriced Line Item Reference Number
Adjustment Amount
Adjustment Quantity
Adjustment Reason Code
Agency Qualifier Code
Allowed Amount
Ambulatory Patient Group Number
Amino Acid Name
Amount Qualifier Code
Anesthesia or Oxygen Minute Count
Approved Ambulatory Patient Group Amount
Approved Ambulatory Patient Group Code
Approved Service Unit Count
Arterial Blood Gas Quantity
Arterial Blood Gas Test Date
Assigned Number
Assumed or Relinquished Care Date
Attachment Control Number
Attachment Description Text
Attachment Report Type Code
Attachment Transmission Code
Auto Accident State or Province Code
Benefits Assignment Certification Indicator
Billing Provider Additional Name
Billing Provider City Name
Billing Provider Contact Name
Billing Provider Credit Card Identifier
Billing Provider First Address Line
Billing Provider First Name
Billing Provider Identifier
Billing Provider Last or Organizational Name
Billing Provider Middle Name
Billing Provider Name Suffix
Billing Provider Postal Zone or ZIP Code
Billing Provider Second Address Line
Billing Provider State or Province Code
Bundled or Unbundled Line Number
Certification Form Number
Certification Period Projected Visit Count
Certified Registered Nurse Anesthetist Supervision Indicator
Claim Adjustment Group Code
Claim Encounter Identifier
Claim Filing Indicator Code
Claim Frequency Code
Claim Note Text
Claim Payment Remark Code
Claim Submission Reason Code
Clinical Laboratory Improvement Amendment Number
Code Category
Code List Qualifier Code
Coinsurance Amount
Communication Number Qualifier
Communication Number
Complication Indicator
Condition Codes
Condition Indicator
Contact Function Code
Contact Inquiry Reference
Continuous Passive Motion Date
Contract Amount
Contract Code
Contract Percentage
Contract Type Code
Contract Version Identifier
Country Code
Coverage Certification Period Count
Creation Date
Credit or Debit Card Holder Additional Name
Credit or Debit Card Holder First Name
Credit or Debit Card Holder Last or Organizational Name
Credit or Debit Card Holder Middle Name
Credit or Debit Card Holder Name Suffix
Credit or Debit Card Maximum Amount
Credit or Debit Card Number
Credit/Debit Flag Code
Currency Code
Current Illness or Injury Date
CHAMPUS Non-availability Indicator
Daily Amino Acid Gram Use Count
Daily Amino Acid Prescription Milliliter Use Count
Daily Dextrose Prescription Milliliter Use Count
Daily Prescribed Nutrient Calorie Count
Daily Prescribed Product Calorie Count
Date of Surgical Procedure
Date Time Period Format Qualifier
Date/Time Qualifier
Deductible Amount
Diagnosis Associated Amount
Diagnosis Code Pointer
Diagnosis Code
Disability Type Code
Disability-From Date
Disability-To Date
Discipline Type Code
Drug Formulary Number
Drug Unit Price
Emergency Indicator
Emergency Medical Technician (EMT) or Paramedic First Name
Emergency Medical Technician or Paramedic Middle Name
Emergency Medical Technician or Paramedic City Name
Emergency Medical Technician or Paramedic First Address Line
Emergency Medical Technician or Paramedic Last Name
Emergency Medical Technician or Paramedic Name Additional Text
Emergency Medical Technician or Paramedic Primary Identifier
Emergency Medical Technician or Paramedic Second Address Line
Emergency Medical Technician or Paramedic Secondary Identifier
Emergency Medical Technician or Paramedic State Code
Emergency Medical Technician or Paramedic ZIP Code
Employment Status Code
End Stage Renal Disease Payment Amount
Enteral or Parenteral Indicator
Entity Identifier Code
Entity Type Qualifier
Exception Code
Exchange Rate
Explanation of Benefits Indicator
EPSDT Indicator
Facility Type Code
Family Planning Indicator
Feeding Count
File Creation Time
First Visit Date
Fixed Format Information
Functional Status Code
Group or Policy Number
Hierarchical Child Code
Hierarchical ID Number
Hierarchical Level Code
Hierarchical Parent ID Number
Hierarchical Structure Code
Homebound Indicator
Hospice Employed Provider Indicator
HCPCS Payable Amount
Identification Code Qualifier
Immunization Status Code
Immunization Type Code
Independent Lab Charge Amount
Individual Relationship Code
Information Release Code
Information Release Date
Ingredient Cost Claimed Amount
Initial Treatment Date
Insurance Type Code
Insured Employer Additional Name
Insured Employer City Name
Insured Employer Contact Name
Insured Employer First Address Line
Insured Employer First Name
Insured Employer Identifier
Insured Employer Middle Name
Insured Employer Name Suffix
Insured Employer Name
Insured Employer Second Address Line
Insured Employer State Code
Insured Employer ZIP Code
Insured Group Name
Insured Group Number
Investigational Device Exemption Identifier
Laboratory or Facility City Name
Laboratory or Facility Contact Name
Laboratory or Facility First Address Line
Laboratory or Facility Name Additional Text
Laboratory or Facility Name
Laboratory or Facility Postal ZIP or Zonal Code
Laboratory or Facility Primary Identifier
Laboratory or Facility Second Address Line
Laboratory or Facility Secondary Identifier
Laboratory or Facility State or Province Code
Last Certification Date
Last Menstrual Period Date
Last Seen Date
Last Worked Date
Last X-Ray Date
Legal Representative Additional Name
Legal Representative City Name
Legal Representative First Address Line
Legal Representative First Name
Legal Representative Last or Organization Name
Legal Representative Middle Name
Legal Representative Second Address Line
Legal Representative State Code
Legal Representative Suffix Name
Legal Representative ZIP Code
Line Item Control Number
Line Note Text
Mammography Certification Number
Measurement Qualifier
Measurement Reference Identification Code
Medical Justification Text
Medical Record Number
Medicare Assignment Code
Medicare Coverage Indicator
Multiple Procedure Indicator
National Drug Code
National Drug Unit Count
Nature of Condition Code
Non-Payable Professional Component Billed Amount
Non-Visit Code
Note Reference Code

Nutrient Administration Method Code
Nutrient Administration Technique Code
Onset Date
Ordering Provider City Name
Ordering Provider Contact Name
Ordering Provider First Address Line
Ordering Provider First Name
Ordering Provider Identifier
Ordering Provider Last Name
Ordering Provider Middle Name
Ordering Provider Name Additional Text
Ordering Provider Name Suffix
Ordering Provider Second Address Line
Ordering Provider Secondary Identifier
Ordering Provider State Code
Ordering Provider ZIP Code
Original Line Item Reference Number
Originator Application Transaction Identifier
Other Employer Additional Name
Other Employer City Name
Other Employer First Address Line
Other Employer First Name
Other Employer Last or Organization Name
Other Employer Middle Name
Other Employer Second Address Line
Other Employer State Code
Other Employer ZIP Code
Other Insured Additional Identifier
Other Insured Additional Name
Other Insured Birth Date
Other Insured City Name
Other Insured First Address Line
Other Insured First Name
Other Insured Gender Code
Other Insured Identifier
Other Insured Last Name
Other Insured Middle Name
Other Insured Name Suffix
Other Insured Plan Name or Program Name
Other Insured Second Address Line
Other Insured State Code
Other Insured ZIP Code
Other Payer Additional Name Text
Other Payer City Name
Other Payer Covered Amount
Other Payer Discount Amount
Other Payer Federal Mandate Amount
Other Payer First Address Line
Other Payer Interest Amount
Other Payer Last or Organization Name
Other Payer Patient Paid Amount
Other Payer Patient Responsibility Amount
Other Payer Per Day Limit Amount
Other Payer Pre-Tax Claim Total Amount
Other Payer Primary Identifier
Other Payer Second Address Line
Other Payer Secondary Identifier
Other Payer State Code
Other Payer Tax Amount
Other Payer ZIP Code
Oxygen Saturation Quantity
Oxygen Saturation Test Date
Paid Service Unit Count
Paramedic Contact Name
Patient Account Number
Patient Additional Name
Patient Age
Patient Amount Paid
Patient Birth Date
Patient City Name
Patient Death Date
Patient Facility Additional Name Text
Patient Facility City Name
Patient Facility First Address Line
Patient Facility Name
Patient Facility Second Address Line
Patient Facility State Code
Patient Facility Zip Code
Patient First Address Line
Patient First Name
Patient Gender Code
Patient Height
Patient Last Name
Patient Marital Status Code
Patient Middle Name
Patient Name Suffix
Patient Primary Identifier
Patient Second Address Line
Patient Secondary Identifier
Patient Signature Source Code
Patient State Code
Patient ZIP Code
Pay-to Provider Additional Name
Pay-to Provider City Name
Pay-to Provider Contact Name
Pay-to Provider First Address Line
Pay-to Provider First Name
Pay-to Provider Identifier
Pay-to Provider Last or Organizational Name
Pay-to Provider Middle Name
Pay-to Provider Name Suffix
Pay-to Provider Second Address Line
Pay-to Provider State Code
Pay-to Provider ZIP Code
Payer Additional Identifier
Payer Additional Name
Payer City Name
Payer First Address Line
Payer Identifier
Payer Name
Payer Paid Amount
Payer Responsibility Sequence Number Code
Payer Second Address Line
Payer State Code
Payer ZIP Code
Period Count
Place of Service Code
Policy Compliance Code
Postage Claimed Amount
Prescription Amino Acid Concentration Percent
Prescription Date
Prescription Dextrose Concentration Percent
Prescription Lipid Concentration Percent
Prescription Lipid Milliliter Use Count
Prescription Number
Prescription Period Count
Pricing Methodology
Prior Authorization Number
Procedure Modifier
Product Name
Product/Service ID Qualifier
Product/Service Procedure Code
Prognosis Code
Property Casualty Claim Number
Provider or Supplier Signature Indicator
Provider Code
Provider Identifier
Provider Organization Code
Provider Signature Date
Provider Specialty Certification Code
Provider Specialty Code
Purchase Price Amount
Purchase Service Charge Amount
Purchase Service Provider Identifier
Purchase Service State Code
Purchased Service Provider City Name
Purchased Service Provider Contact Name
Purchased Service Provider First Address Line
Purchased Service Provider First Name
Purchased Service Provider Last or Organization Name
Purchased Service Provider Middle Name
Purchased Service Provider Name Additional Text
Purchased Service Provider Second Address Line
Purchased Service Provider Secondary Identifier
Purchased Service Provider State Code
Purchased Service Provider ZIP Code
Quantity Qualifier
Record Format Code
Reference Identification Qualifier
Referral Number
Referring Provider City Name
Referring Provider Contact Name
Referring Provider First Address Line
Referring Provider First Name
Referring Provider Identification Number
Referring Provider Last Name
Referring Provider Middle Name
Referring Provider Name Additional Text
Referring Provider Name Suffix
Referring Provider Second Address Line
Referring Provider Secondary Identifier
Referring Provider State Code
Referring Provider ZIP Code
Reimbursement Rate
Reject Reason Code
Related Hospitalization Admission Date
Related Hospitalization Discharge Date
Related Nursing Home Admission Date
Related-Causes Code
Rendering Provider City Name
Rendering Provider Contact Name
Rendering Provider First Address Line
Rendering Provider First Name
Rendering Provider Identifier
Rendering Provider Last Name
Rendering Provider Middle Name
Rendering Provider Name Additional Text
Rendering Provider Name Suffix
Rendering Provider Second Address Line
Rendering Provider Secondary Identifier
Rendering Provider State Code
Rendering Provider ZIP Code
Rental Equipment Billing Frequency Code
Rental Price Amount
Repriced Claim Reference Number
Repriced Line Item Reference Number
Repricing Organization Identifier
Repricing Per Diem or Flat Rate Amount
Resource Utilization Group Number
Resubmission Number
Retirement or Insurance Card Date
Review By Code Indicator
Sales Tax Amount
Sample Selection Modules
Saving Amount
School City Name
School Contact Name
School First Address Line
School Name Additional Text
School Name
School Primary Identifier
School Second Address Line
School State Code
School ZIP Code
Second Admission Date
Second Discharge Date
Service Date
Service From Date
Service Line Paid Amount
Service Type Code
Service Unit Count
Ship/Delivery or Calendar Pattern Code
Ship/Delivery Pattern Time Code

Shipped Date
Similar Illness or Symptom Date
Special Program Indicator
Statement Covers Period End Date
Statement Covers Period Start Date
Student Status Code
Submittal Date
Submitted Charge Amount
Submitter or Receiver Address Line
Submitter or Receiver City Name
Submitter or Receiver Contact Name
Submitter or Receiver First Name
Submitter or Receiver Identifier
Submitter or Receiver Last or Organization Name
Submitter or Receiver Middle Name
Submitter or Receiver State Code
Submitter or Receiver ZIP Code
Submitter Additional Name
Subscriber or Dependent Death Date
Subscriber Additional Identifier
Subscriber Birth Date
Subscriber Contact Name
Subscriber First Name
Subscriber Gender Code
Subscriber Identifier
Subscriber Last Name
Subscriber Marital Status Code
Subscriber Middle Name
Subscriber Name Suffix
Subscriber Postal ZIP Code
Subscriber Second Address Line
Subscriber State
Supervising Provider City Name
Supervising Provider Contact Name
Supervising Provider First Address Line
Supervising Provider First Name
Supervising Provider Identification Number
Supervising Provider Last Name
Supervising Provider Middle Name
Supervising Provider Name Additional Text
Supervising Provider Name Suffix
Supervising Provider Second Address Line
Supervising Provider Secondary Identifier
Supervising Provider State Code
Supervising Provider ZIP Code
Supporting Document Question Identifier
Supporting Document Response Code
Surgical Procedure Code
Terms Discount Percentage
Test Performed Date
Test Results
Time Period Qualifier
Total Claim Charge Amount
Total Purchased Service Amount
Total Visits Rendered Count
Transaction Segment Count
Transaction Set Control Number
Transaction Set Identifier Code
Transaction Set Purpose Code
Treatment or Therapy Date
Treatment Length
Unit or Basis for Measurement Code
Value Added Network Trace Number
Version Identification Code
Version Identifier
Weekly Prescription Lipid Use Count
Work Return Date
X-Ray Availability Indicator Code

C. Institutional Claim or Equivalent Encounter

The transaction selected for the institutional health care claim or equivalent encounter information is ASC X12N 837—Health Care Claim: Institutional (004010X096).

1. Implementation Guide and Source

The source of the implementation guide for the institutional health care claim or equivalent encounter is: Washington Publishing Company, 806 W. Diamond Ave., Suite 400, Gaithersburg, MD, 20878, Telephone 301–590–9337, FAX: 301–869–9460. The web site address is http://www.wpc-edi.com/hipaa/

2. Data Elements

Activities Permitted
Adjusted Repriced Claim Reference Number
Adjustment Amount
Adjustment Quantity
Adjustment Reason Code
Admission Date and Hour
Admission Source Code
Admission Type Code
Allowed Amount
Amount Qualifier Code
Approved Amount
Approved Diagnosis Related Group Code
Approved HCPCS Code
Approved Revenue Code
Approved Service Unit Count
Assigned Number
Attachment Control Number
Attachment Description Text
Attachment Report Type Code
Attachment Transmission Code
Attending Physician First Name
Attending Physician Last Name
Attending Physician Middle Name
Attending Physician Primary Identifier
Auto Accident State or Province Code
Benefits Assignment Certification Indicator
Billing Note Text
Billing Provider City Name
Billing Provider Contact Name
Billing Provider First Address Line
Billing Provider Identifier
Billing Provider Last or Organizational Name
Billing Provider Postal Zone or ZIP Code
Billing Provider Second Address Line
Billing Provider State or Province Code
Certification Condition Indicator
Certification Type Code
Claim Adjustment Group Code
Claim Days Count
Claim Disproportionate Share Amount
Claim DRG Amount
Claim DRG Outlier Amount
Claim Encounter Identifier
Claim ESRD Payment Amount
Claim Filing Indicator Code
Claim Frequency Code
Claim HCPCS payable amount
Claim Indirect Teaching Amount
Claim MSP Pass-through amount
Claim Note Text
Claim Original Reference Number
Claim Payment Remark Code
Claim PPS capital amount
Claim PPS capital outlier amount
Claim Total Denied Charge Amount
Code Associated Amount
Code Associated Date
Code Associated Quantity
Code Category
Code List Qualifier Code
Contact Function Code
Contract Amount
Contract Code
Contract Percentage
Contract Type Code
Contract Version Identifier
Cost Report Day Count
Country Code
Covered Days or Visits Count
Creation Date
Credit or Debit Card Authorization Number
Credit or Debit Card Holder First Name
Credit or Debit Card Holder Last or Organizational Name
Credit or Debit Card Holder Middle Name
Credit or Debit Card Maximum Amount
Credit or Debit Card Number
Currency Code
Date Time Period Format Qualifier
Date/Time Qualifier
Diagnosis Date
Discharge Hour
Discipline Type Code
Document Control Identifier
Employer Identification Number
Employment Status Code
Entity Identifier Code
Entity Type Qualifier
Estimated Amount Due
Estimated Claim Due Amount
Exception Code
Explanation of Benefits Indicator
Facility Code Qualifier
Facility Type Code
File Creation Time
Frequency Number
Functional Limitation Code
Group or Policy Number
Hierarchical Child Code
Hierarchical ID Number
Hierarchical Level Code
Hierarchical Parent ID Number
Hierarchical Structure Code
Home Health Certification Period
HCPCS Modifier Code
HCPCS/CPT–4 Code
Identification Code Qualifier
Implant Date
Implant Status Code
Implant Type Code
Individual Relationship Code
Industry Code
Information Release Code
Insurance Type Code
Insured Employer First Address Line
Insured Employer First Name
Insured Employer Identifier
Insured Group Name
Insured Group Number
Investigational Device Exemption Identifier
Last Admission Date
Last Visit Date
Leads Left In Patient Indicator
Legal Representative City Name
Legal Representative Contact Name
Legal Representative First Address Line
Legal Representative First Name
Legal Representative Last or Organization Name
Legal Representative Middle Name
Legal Representative Second Address Line
Legal Representative State Code
Legal Representative ZIP Code
Lifetime Psychiatric Days Count
Lifetime Reserve Days Count
Line Charge Amount
Line Item Denied Charge or Non-Covered Charge Amount
Manufacturer Identifier
Medicare Coverage Indicator
Medicare Paid at 100% Amount

Medicare Paid at 80% Amount
Mental Status Code
Model Number
Non-Covered Charge Amount
Non-Insured Employer City Name
Non-Insured Employer First Address Line
Non-Insured Employer First Name
Non-Insured Employer Identifier
Non-Insured Employer Last or Organization Name
Non-Insured Employer Middle Name
Non-Insured Employer Second Address Line
Non-Insured Employer State Code
Non-Insured Employer ZIP Code
Note Reference Code
Old Capital Amount
Operating Physician First Name
Operating Physician Last Name
Operating Physician Middle Name
Operating Physician Primary Identifier
Ordering Provider Identifier
Ordering Provider Last Name
Originator Application Transaction Identifier
Other Employer City Name
Other Employer First Address Line
Other Employer First Name
Other Employer Last or Organization Name
Other Employer Second Address Line
Other Employer Secondary Identifier
Other Employer State Code
Other Employer ZIP Code
Other Insured Additional Identifier
Other Insured Birth Date
Other Insured City Name
Other Insured First Address Line
Other Insured First Name
Other Insured Gender Code
Other Insured Identifier
Other Insured Last Name
Other Insured Middle Name
Other Insured Plan Name or Program Name
Other Insured Second Address Line
Other Insured State Code
Other Insured ZIP Code
Other Payer City Name
Other Payer First Address Line
Other Payer Last or Organization Name
Other Payer Patient Paid Amount
Other Payer Primary Identifier
Other Payer Second Address Line
Other Payer Secondary Identifier
Other Payer State Code
Other Payer ZIP Code
Other Physician First Name
Other Physician Identifier
Other Physician Last Name
Other Physician Middle Name
Paid From Part A Medicare Trust Fund Amount
Paid From Part B Medicare Trust Fund Amount
Patient Account Number
Patient Amount Paid
Patient Birth Date
Patient City Name
Patient Discharge Facility Type Code
Patient First Address Line
Patient First Name
Patient Gender Code
Patient Last Name
Patient Liability Amount
Patient Marital Status Code
Patient Middle Name
Patient Name Suffix
Patient Primary Identifier
Patient Second Address Line
Patient Secondary Identifier
Patient State Code
Patient Status Code
Patient ZIP Code
Payer Additional Identifier
Payer City Name
Payer First Address Line
Payer Identifier
Payer Name
Payer Paid Amount
Payer Responsibility Sequence Number Code
Payer Second Address Line
Payer State Code
Payer ZIP Code
Period Count
Physician Contact Date
Physician Order Date
Policy Compliance Code
Pricing Methodology
Prior Authorization Number
Procedure Modifier
Product/Service ID Qualifier
Product/Service Procedure Code
Professional Component Amount
Prognosis Code
PPS-Capital DSH DRG Amount
PPS-Capital Exception Amount
PPS-Capital FSP DRG Amount
PPS-Capital HSP DRG Amount
PPS-Capital IME amount
PPS-Operating Federal Specific DRG Amount
PPS-Operating Hospital Specific DRG Amount
Quantity Qualifier
Reference Identification Qualifier
Reimbursement Rate
Reject Reason Code
Related-Causes Code
Repriced Claim Reference Number
Repricing Organization Identifier
Repricing Per Diem or Flat Rate Amount
Returned to Manufacturer Indicator
Saving Amount
School City Name
School First Address Line
School Name
School Primary Identifier
School Second Address Line
School State Code
School ZIP Code
Serial Number
Service Date
Service From Date
Service Line Paid Amount
Service Line Rate
Service Line Revenue Code
Service Unit Count
Statement From or To Date
Submission or Resubmission Number
Submitted Charge Amount
Submitter or Receiver Contact Name
Submitter or Receiver Identifier
Submitter or Receiver Last or Organization Name
Subscriber Additional Identifier
Subscriber Birth Date
Subscriber First Address Line
Subscriber First Name
Subscriber Gender Code
Subscriber Last Name
Subscriber Marital Status Code
Subscriber Middle Name
Subscriber Second Address Line
Subscriber State
Surgery Date
Surgical Procedure Code
Terms Discount Percentage
Time Period Qualifier
Total Claim Charge Amount
Total Medicare Paid Amount
Total Visits Projected This Certification Count
Transaction Segment Count
Transaction Set Control Number
Transaction Set Identifier Code
Transaction Set Purpose Code
Unit or Basis for Measurement Code
Value Added Network Trace Number
Version Identification Code
Visits Prior to Recertification Date Count
Warranty Expiration Date 1861J1 Facility Indicator

D. Dental Claim or Equivalent Encounter

The transaction selected for the dental health care claim or equivalent encounter is: ASC X12N 837—Health Care Claim: Dental (004010X097).

1. Implementation Guide and Source

The source of the implementation guide for the dental health care claim or equivalent encounter is: Washington Publishing Company, 806 W. Diamond Ave., Suite 400, Gaithersburg, MD, 20878, Telephone 301–590–9337, FAX: 301–869–9460. The web site address is http://www.wpc-edi.com/hipaa/

2. Data Elements

Accident Date
Adjudication or Payment Date
Adjustment Amount
Adjustment Quantity
Adjustment Reason Code
Admission Date or Start of Care Date
Amount Qualifier Code
Anesthesia Unit Count
Appliance Placement Date
Assigned Number
Assistant Surgeon City Name
Assistant Surgeon First Address Line
Assistant Surgeon First Name
Assistant Surgeon Last Name
Assistant Surgeon Middle Name
Assistant Surgeon Primary Identification Number
Assistant Surgeon Second Address Line
Assistant Surgeon State Code
Assistant Surgeon Suffix Name
Assistant Surgeon ZIP Code
Attachment Control Number
Attachment Report Type Code
Attachment Transmission Code
Auto Accident State or Province Code
Benefits Assignment Certification Indicator
Billing Provider City Name
Billing Provider Credit Card Identifier
Billing Provider First Address Line
Billing Provider First Name
Billing Provider Identifier
Billing Provider Last or Organizational Name
Billing Provider Middle Name
Billing Provider Name Suffix
Billing Provider Postal Zone or ZIP Code
Billing Provider Second Address Line
Billing Provider State or Province Code
Claim Adjustment Group Code
Claim Encounter Identifier
Claim Filing Indicator Code
Claim
Submission Reason Code
Clinical Laboratory Improvement Amendment Number

Code List Qualifier Code
Contact Function Code
Coordination of Benefits Code
Country Code
Creation Date
Credit or Debit Card Authorization Number
Credit or Debit Card Holder First Name
Credit or Debit Card Holder Last or Organizational Name
Credit or Debit Card Holder Middle Name
Credit or Debit Card Holder Name Suffix
Credit or Debit Card Maximum Amount
Credit or Debit Card Number
Credit/Debit Flag Code
Currency Code
Date Time Period Format Qualifier
Date/Time Qualifier
Destination Payer Code
Diagnosis Code
Diagnosis Date
Diagnosis Type Code
Discharge Date/End Of Care Date
Entity Identifier Code
Entity Type Qualifier
Facility Code Qualifier
Facility Type Code
File Creation Time
Group or Policy Number
Hierarchical Child Code
Hierarchical ID Number
Hierarchical Level Code
Hierarchical Parent ID Number
Hierarchical Structure Code
Identification Code Qualifier
Individual Relationship Code
Information Release Code
Information Release Date
Initial Placement Date
Insured Employer First Address Line
Insured Employer First Name
Insured Employer Identifier
Insured Employer Middle Name
Insured Employer Name Suffix
Insured Group Name
Insured Group Number
Laboratory or Facility City Name
Laboratory or Facility First Address Line
Laboratory or Facility Name
Laboratory or Facility Postal ZIP or Zonal Code
Laboratory or Facility Primary Identifier
Laboratory or Facility Second Address Line
Laboratory or Facility State or Province Code
Legal Representative or Responsible Party Identifier
Legal Representative City Name
Legal Representative First Address Line
Legal Representative First Name
Legal Representative Last or Organization Name
Legal Representative Middle Name
Legal Representative Second Address Line
Legal Representative State Code
Legal Representative Suffix Name
Legal Representative ZIP Code
Line Charge Amount
Medicare Assignment Code
Oral Cavity Designation Code
Originator Application Transaction Identifier
Orthodontic Treatment Months Count
Orthodontic Treatment Months Remaining Count
Other Insured Birth Date
Other Insured City Name
Other Insured First Address Line
Other Insured First Name
Other Insured Gender Code
Other Insured Identifier
Other Insured Last Name
Other Insured Middle Name
Other Insured Name Suffix
Other Insured Second Address Line
Other Insured State Code
Other Insured ZIP Code
Other Payer Covered Amount
Other Payer Discount Amount
Other Payer Last or Organization Name
Other Payer Patient Paid Amount
Other Payer Patient Responsibility Amount
Other Payer Primary Identifier
Patient Account Number
Patient Amount Paid
Patient Birth Date
Patient City Name
Patient First Address Line
Patient First Name
Patient Gender Code
Patient Last Name
Patient Marital Status Code
Patient Middle Name
Patient Name Suffix
Patient Primary Identifier
Patient Second Address Line
Patient Signature Source Code
Patient State Code
Patient ZIP Code
Pay-to-Provider City Name
Pay-to-Provider First Address Line
Pay-to-Provider First Name
Pay-to-Provider Identifier
Pay-to-Provider Last or Organizational Name
Pay-to-Provider Middle Name
Pay-to-Provider Name Suffix
Pay-to-Provider Second Address Line
Pay-to-Provider State Code
Pay-to-Provider ZIP Code
Payer Additional Identifier
Payer City Name
Payer First Address Line
Payer Identifier
Payer Name
Payer Paid Amount
Payer Responsibility Sequence Number Code
Payer Second Address Line
Payer State Code
Payer ZIP Code
Periodontal Charting Measurement
Policy Name
Predetermination of Benefits Identifier
Predetermination of Benefits Indicator
Prior Authorization Number
Prior Placement Date
Procedure Count
Procedure Modifier
Product/Service ID Qualifier
Product/Service Procedure Code
Prothesis, Crown or Inlay Code
Provider or Supplier Signature Indicator
Provider Signature Date
Quantity Qualifier
Reference Identification Qualifier
Referring Provider City Name
Referring Provider First Address Line
Referring Provider First Name
Referring Provider Identification Number
Referring Provider Last Name
Referring Provider Middle Name
Referring Provider Name Suffix
Referring Provider Second Address Line
Referring Provider State Code
Referring Provider ZIP Code
Related-Causes Code
Rendering Provider City Name
Rendering Provider First Address Line
Rendering Provider First Name
Rendering Provider Identifier
Rendering Provider Last Name
Rendering Provider Middle Name
Rendering Provider Name Suffix
Rendering Provider Second Address Line
Rendering Provider State Code
Rendering Provider ZIP Code
Replacement Date
Retirement or Insurance Card Date
School City Name
School First Address Line
School Name
School Primary Identifier
School Second Address Line
School State Code
School ZIP Code
Service Date
Service Line Paid Amount
Student Status Code
Submitter or Receiver Address Line
Submitter or Receiver City Name
Submitter or Receiver Contact Name
Submitter or Receiver First Name
Submitter or Receiver Identifier
Submitter or Receiver Last or Organization Name
Submitter or Receiver Middle Name
Submitter or Receiver State Code
Submitter or Receiver ZIP Code
Subscriber Birth Date
Subscriber First Address Line
Subscriber First Name
Subscriber Gender Code
Subscriber Identifier
Subscriber Last Name
Subscriber Marital Status Code
Subscriber Middle Name
Subscriber Name Suffix
Subscriber Postal ZIP Code
Subscriber Second Address Line
Subscriber State
Title XIX Identification Number
Tooth Code
Tooth Number
Tooth Status Code
Tooth Surface
Total Claim Charge Amount
Transaction Segment Count
Transaction Set Control Number
Transaction Set Identifier Code
Transaction Set Purpose Code
Unit or Basis for Measurement Code

Addendum 2—Health Care Payment and Remittance Advice

The transaction selected for the health care payment and remittance advice is ASC X12N 835—Health Care Claim Payment/Advice (004010X091).

A. Implementation Guide and Source

The source of the implementation guide for the ASC X12N 835—Health Care Claim Payment/Advice (004010X091) is: Washington Publishing Company, 806 W. Diamond Ave., Suite 400, Gaithersburg, MD, 20878, Telephone 301–590–9337, FAX: 301–869–9460. The website address is http://www.wpc-edi.com/hipaa/

B. Data Elements

Account Number Qualifier
Additional Payee Identifier

Adjustment Amount
Adjustment Quantity
Adjustment Reason Code
Amount Paid to Patient
Amount Qualifier Code
Assigned Number
Average DRG length of stay
Average DRG weight
Century
Check or EFT Trace Number
Check/EFT Issue Date
Claim Adjustment Group Code
Claim Contact Communications Number
Claim Contact Name
Claim Date
Claim Disproportionate Share Amount
Claim ESRD Payment Amount
Claim Filing Indicator Code
Claim Frequency Code
Claim HCPCS payable amount
Claim Indirect Teaching Amount
Claim MSP Pass-through amount
Claim Payment Remark Code
Claim PPS capital amount
Claim PPS capital outlier amount
Claim Status Code
Claim Supplemental Information Amount
Claim Supplemental Information Quantity
Code List Qualifier Code
Communication Number Extension
Communication Number Qualifier
Contact Function Code
Corrected Insured Identification Indicator
Corrected Patient or Insured First Name
Corrected Patient or Insured Last Name
Corrected Patient or Insured Middle Name
Corrected Patient or Insured Name Prefix
Corrected Patient or Insured Name Suffix
Corrected Priority Payer Identification Number
Corrected Priority Payer Name
Cost Report Day Count
Covered Days or Visits Count
Credit/Debit Flag Code
Crossover Carrier Identifier
Crossover Carrier Name
Currency Code
Date/Time Qualifier
Depository Financial Institution (DFI) Identifier
Depository Financial Institution (DFI) ID Number Qualifier
Description Text
Diagnosis Related Group (DRG) Weight
Diagnosis Related Group (DRG)
Discharge Fraction
Entity Identifier Code
Entity Type Qualifier
Exchange Rate
Facility Type Code
Fiscal Period Date
Identification Code Qualifier
Lifetime Psychiatric Days Count
Line Item Provider Payment Amount
Location Identification Code
Location Qualifier
National Uniform Billing Committee Revenue Code
Old Capital Amount
Original Service Unit Count
Originating Company Supplemental Code
Other Claim Related Identifier
Patient Control Number
Patient First Name
Patient Last Name
Patient Liability Amount
Patient Middle Name
Patient Name Prefix
Patient Name Suffix
Patient Status Code
Payee City Name
Payee First Line Address
Payee Identification Code
Payee Name
Payee Postal Zip Code
Payee Second Line Address
Payee State Code
Payer City Name
Payer Claim Control Number
Payer Contact Communication Number
Payer Contact Name
Payer First Address Line
Payer Identifier
Payer Name
Payer Process Date
Payer Second Address Line
Payer State Code
Payer ZIP Code
Payment Format Code
Payment Method Code
Procedure Modifier
Product/Service ID Qualifier
Product/Service Procedure Code Text
Product/Service Procedure Code
Production Date
Professional Component Amount
Provider Adjustment Amount
Provider Adjustment Identifier
Provider First Name
Provider Identifier
Provider Last or Organization Name
Provider Middle Name
Provider Name Prefix
Provider Name Suffix
PPS-Capital DSH DRG Amount
PPS-Capital Exception Amount
PPS-Capital FSP DRG Amount
PPS-Capital HSP DRG Amount
PPS-Capital IME amount
PPS-Operating Federal Specific DRG Amount
PPS-Operating Hospital Specific DRG Amount
Quantity Qualifier
Receiver or Provider Account Number
Receiver Identifier
Receiver/Provider Bank ID Number
Reference Identification Qualifier
Reimbursement Rate
Remark Code
Sender Account Number
Sender DFI Identifier
Service Date
Service Supplemental Amount
Service Supplemental Quantity Count
Submitted Charge Amount
Submitted Line Charges Paid
Subscriber First Name
Subscriber Identifier
Subscriber Last Name
Subscriber Middle Name
Subscriber Name Prefix
Subscriber Name Suffix
Total Actual Provider Payment Amount
Total Blood Deductible
Total Capital Amount
Total Claim Charge Amount
Total Claim Count
Total Coinsurance Amount
Total Contractual Adjustment Amount
Total Cost Outlier Amount
Total Cost Report Day Count
Total Covered Charge Amount
Total Covered Day Count
Total Day Outlier Amount
Total Deductible Amount
Total Denied Charge Amount
Total Discharge Count
Total Disp. Share Amount
Total DRG Amount
Total Federal-Specific Amount
Total Gramm-Rudman Reduction Amount
Total Hospital-Specific Amount
Total HCPCS Payable Amount
Total HCPCS Reported Charge Amount
Total Indirect Medical Education Amount
Total Interest Amount
Total MSP Pass-Through Amount
Total MSP Patient Liability Met Amount
Total MSP Payer Amount
Total Non-Covered Charge Amount
Total Non-Lab Charge Amount
Total Noncovered Charge Amount
Total Noncovered Day Count
Total Outlier Day Count
Total Patient Reimbursement Amount
Total Professional Component Amount
Total Provider Payment Amount
Total PIP Adjustment Amount
Total PIP Claim Count
Total PPS Capital FSP DRG Amount
Total PPS Capital HSP DRG Amount
Total PPS DSH DRG Amount
Trace Type Code
Transaction Handling Code
Transaction Segment Count
Transaction Set Control Number
Transaction Set Identifier Code
Units of Service Paid Count
Version Identifier

Addendum 3—Coordination of Benefits

A. Professional Claim Coordination of Benefits

The transaction selected for the professional claim coordination of benefits is ASC X12N 837—Health Care Claim: Professional (004010X098).

1. Implementation Guide and Source

The source of the implementation guide for the professional claim coordination of benefits transaction set is: Washington Publishing Company, 806 W. Diamond Ave., Suite 400, Gaithersburg, MD, 20878, Telephone 301–590–9337, FAX: 301–869–9460. The web site address is http://www.wpc-edi.com/hipaa/

2. Data Elements

Data elements are found in addendum 1, B.2.

B. Institutional Claim Coordination of Benefits

The transaction selected for the institutional claim coordination of benefits is ASC X12N 837—Health Care Claim: Institutional (004010X096).

1. Implementation Guide and Source

The source of the implementation guide for the institutional claim coordination of benefits transaction set is: Washington Publishing Company, 806 W. Diamond Ave., Suite 400, Gaithersburg, MD, 20878, Telephone 301–590–9337, FAX: 301–869–9460. The web site address is http://www.wpc-edi.com/hipaa/

2. Data Elements

Data elements are found in Addendum 1, C.2.

C. Dental Claim Coordination of Benefits

The transaction selected for the dental claim coordination of benefits is ASC X12N 837—Health Care Claim: Dental (004010X097).

1. Implementation Guide and Source

The source of implementation guide for the dental claim coordination of benefits transaction set is: Washington Publishing Company, 806 W. Diamond Ave., Suite 400, Gaithersburg, MD, 20878, Telephone 301–590–9337, FAX: 301–869–9460. The web site address is http://www.wpc-edi.com/hipaa/

2. Data Elements

See Addendum 1, D.2.

D. Retail Drug Claim Coordination of Benefits

The transactions selected for retail drug coordination of benefits is NCPDP Telecommunications Standard Format version 3.2 and the equivalent NCPDP Batch Standard Version 1.0.

1. Implementation Guide and Source

The source of implementation guide for the retail drug claim coordination of benefits transaction set is: National Council for Prescription Drug Programs, 4201 North 24th Street, Suite 365, Phoenix, AZ, 85016, Telephone 602–957–9105, FAX 602–955–0749. The web site address is http://www.ncpdp.org

2. Data Elements

See Addendum 1, A.2.

Addendum 4—Health Claim Status

The transaction selected for the health claim status is ASC X12N 276/277—Health Care Claim Status Request and Response (004010X093).

A. Implementation Guide and Source

The source of the implementation guide for the health claim status transaction set is: Washington Publishing Company, 806 W. Diamond Ave., Suite 400, Gaithersburg, MD, 20878, Telephone 301–590–9337, FAX: 301–869–9460. The website address is http://www.wpc-edi.com/hipaa/

B. Data Elements

Adjudication or Payment Date
Amount Qualifier Code
Bill Type Identifier
Check or EFT Trace Number
Check/EFT Issue Date
Claim Payment Amount
Claim Service Period
Creation Date
Date Time Period Format Qualifier
Date/Time Qualifier
Entity Identifier Code
Entity Type Qualifier
Extra Narrative Data
Health Care Claim Status Category Code
Health Care Claim Status Code
Hierarchical Child Code
Hierarchical ID Number
Hierarchical Level Code
Hierarchical Parent ID Number
Hierarchical Structure Code
Identification Code Qualifier
Information Receiver Additional Address
Information Receiver Address
Information Receiver City
Information Receiver First Name
Information Receiver Identification Number
Information Receiver Last or Organization Name
Information Receiver Middle Name
Information Receiver Name Prefix
Information Receiver Name Suffix
Information Receiver Specific Location
Information Receiver State
Information Receiver ZIP Code
Line Charge Amount
Line Item Control Number
Line Item Service Date
Location Qualifier
Original Service Unit Count
Originator Application Transaction Identifier
Patient Control Number
Patient First Name
Patient Last Name
Patient Middle Name
Patient Name Prefix
Patient Name Suffix
Payer City Name
Payer Claim Control Number
Payer First Address Line
Payer Identifier
Payer Name
Payer Second Address Line
Payer State Code
Payer ZIP Code
Payment Method Code
Procedure Modifier
Product/Service ID Qualifier
Provider First Name
Provider Identifier
Provider Last or Organization Name
Provider Middle Name
Provider Name Prefix
Provider Name Suffix
Reference Identification Qualifier
Revenue Code
Service Identification Code
Service Line Date
Service Unit Count
Status Information Effective Date
Subscriber Birth Date
Subscriber City
Subscriber First Address Line
Subscriber First Name
Subscriber Gender Code
Subscriber Identifier
Subscriber Last Name
Subscriber Middle Name
Subscriber Name Prefix
Subscriber Name Suffix
Subscriber Postal ZIP Code
Subscriber Second Address Line
Subscriber State
Total Claim Charge Amount
Trace Type Code
Transaction Segment Count
Transaction Set Control Number
Transaction Set Identifier Code
Transaction Set Purpose Code
Transaction Type Code

[Direct Comments to Judy Ball, Enrollment and Eligibility IT]

Addendum 5—Benefit Enrollment and Maintenance

The transaction selected for benefit enrollment and maintenance is ASC X12N 834—Benefit Enrollment and Maintenance Transaction Set (004010X095).

A. Implementation Guide and Source

The source of the implementation guide for the benefit enrollment and maintenance transaction set is: Washington Publishing Company, 806 W. Diamond Ave., Suite 400, Gaithersburg, MD, 20878, Telephone 301–590–9337, FAX: 301–869–9460. The web site address is http://www.wpc-edi.com/hipaa/

B. Data Elements

Label—name of elements
Account Address Information
Account City Name
Account Communication Number
Account Contact Inquiry Reference Number
Account Contact Name
Account Country Code
Account Effective Date
Account Identification Code
Account Monetary Amount
Account Number Qualifier
Account Postal ZIP Code
Account State Code
Action Code
Additional Account Identifier
Additional Other Coverage Identifier
Adjustment Amount
Adjustment Reason Code Characteristic
Adjustment Reason Code
Amount Qualifier Code
Assigned Number
Benefit Account Number
Benefit Status Code
Birth Sequence Number
Card Count
Citizenship Status Code
Code List Qualifier Code
Communication Number Qualifier
Communication Number
Consolidated Omnibus Budget Reconciliation Act (COBRA) Qualifying Event Code
Contact Function Code
Contact Inquiry Reference
Coordination of Benefits Code
Coordination of Benefits Date
Country Code
Coverage Level Code
Creation Date
Credit/Debit Flag Code
Current Health Condition Code
Date Time Period Format Qualifier
Date/Time Qualifier
Dependent Employer Identification Code
Dependent Employer Name
Dependent Employment Date
Dependent School Date
Dependent School Identification Code
Dependent School Name
Description Text
Diagnosis Code
Disability Eligibility Date
Disability Maximum Entitlement Amount
Disability Type Code
Employment Status Code
Enrollment Control Total
Entity Identifier Code
Entity Relationship Code
Entity Type Qualifier
File Creation Time
First Diagnosed Date
Frequency Code
Gender Code
Group or Policy Number

Health Coverage Eligibility Date
Health-Related Code
Identification Card Type Code
Identification Code Qualifier
Individual Relationship Code
Industry Code
Insurance Eligibility Date
Insurance Group Number
Insurance Line Code
Insurer Contact Inquiry Reference
Insurer Contact Name
Insurer Contact Number
Insurer Entity Relationship Code
Insurer Identification Code
Insurer Name
Issuing State
Last Visit Reason Text
Late Reason Code
Location Qualifier
Maintenance Reason Code
Maintenance Type Code
Marital Status Code
Master Policy Number
Medicare Plan Code
Member Additional Address
Member City Name
Member Contact Name
Member Postal Code
Member State or Province Code
Monetary Amount
Occupation Code
Other Insurance Company Identification Code
Other Insurance Company Name
Payer Responsibility Sequence Number Code
Plan Coverage Description Text
Policy Name
Pre-disability Work Days Count
Premium Contribution Amount
Previous Transaction Identifier
Primary Insured Collateral Dependent Count
Primary Insured Sponsored Dependent Count
Product Option Code
Product/Service ID Qualifier
Provider Code
Provider Communications Number
Provider Contact Inquiry Reference
Provider Contact Name
Provider Eligibility Date
Provider First Name
Provider Identifier
Provider Last or Organization Name
Provider Middle Name
Provider Name Prefix
Provider Name Suffix
Quantity Count
Quantity Qualifier
Race or Ethnicity Code
Reference Identification Qualifier
Sponsor Additional Name
Sponsor City Name
Sponsor Contact Name
Sponsor Country Code
Sponsor Identifier
Sponsor Name
Sponsor State Code
Sponsor Street Address
Sponsor Zip Code
Student Status Code
Subscriber or Dependent Death Date
Subscriber Additional Identifier
Subscriber Birth Date
Subscriber City
Subscriber County Code
Subscriber Current Weight
Subscriber First Address Line
Subscriber First Name
Subscriber Height
Subscriber Identifier
Subscriber Last Name
Subscriber Middle Name
Subscriber Name Prefix
Subscriber Name Suffix
Subscriber Postal ZIP Code
Subscriber Previous Weight
Subscriber Second Address Line
Subscriber State
Time Zone Code
Transaction Segment Count
Transaction Set Control Number
Transaction Set Identifier Code
Transaction Set Purpose Code
TPA or Broker Account Address
TPA or Broker Account Amount
TPA or Broker Account City Name
TPA or Broker Account Contact Communication Number
TPA or Broker Account Contact Inquiry Reference
TPA or Broker Account Contact Name
TPA or Broker Account Number
TPA or Broker Account Postal Code
TPA or Broker Account State or Province Code
TPA or Broker Additional Account Reference Identification Number
TPA or Broker Additional Name
TPA or Broker Communication Number
TPA or Broker Contact Inquiry Reference Number
TPA or Broker Country Code
TPA or Broker Identification Code
TPA or Broker Name
TPA or Broker State Code
Underwriting Decision Code
Version Identification Code
Weight Change Text
Work Intensity Code
Yes/No Condition or Response Code

Addendum 6—Eligibility for a Health Plan

The transaction selected for the eligibility for a health plan is ASC X12N 270/271—Health Care Eligibility Inquiry and Response (004010X092).

A. Implementation Guide and Source

The source of the implementation guide for eligibility for a health plan transaction set is: Washington Publishing Company, 806 W. Diamond Ave., Suite 400, Gaithersburg, MD, 20878, Telephone 301-590–9337, FAX: 301–869–9460. The website address is http://www.wpc-edi.com/hipaa/

B. Data Elements

Labels
Agency Qualifier Code
Amount Qualifier Code
Authorization Indicator Code
Benefit Coverage Level Code
Benefit Used or Available Amount
Birth Sequence Number
Communication Number Qualifier
Communication Number
Contact Function Code
Country Code
Coverage Level Code
Creation Date
Date Time Period Format Qualifier
Date/Time Qualifier
Dependent Additional Identification Text
Dependent Additional Identifier
Dependent Benefit Date
Dependent Birth Date
Dependent City Name
Dependent Communications Number
Dependent Contact Name
Dependent First Line Address
Dependent First Name
Dependent Gender Code
Dependent Identification Code
Dependent Last Name
Dependent Middle Name
Dependent Name Suffix
Dependent Postal Zip Code
Dependent Second Line Address
Dependent State Code
Dependent Trace Number
Description Text
Eligibility or Benefit Amount
Eligibility or Benefit Information
Eligibility or Benefit Percent
Entity Identifier Code
Entity Type Qualifier
File Creation Time
Follow-up Action Code
Free-Form Message Text
Handicap Indicator Code
Hierarchical Child Code
Hierarchical ID Number
Hierarchical Level Code
Hierarchical Parent ID Number
Hierarchical Structure Code
Identification Code Qualifier
Individual Relationship Code
Information Receiver Additional Address
Information Receiver Additional Identifier
Information Receiver Address
Information Receiver City
Information Receiver Contact Name
Information Receiver First Name
Information Receiver Identification Number
Information Receiver Last or Organization Name
Information Receiver Middle Name
Information Receiver Name Suffix
Information Receiver State
Information Receiver Trace Number
Information Receiver ZIP Code
Information Source Contact Name
Information Source Process Date
Insurance Eligibility Date
Insurance Type Code
Insured Indicator
Location Identification Code
Location Qualifier
Loop Identifier Code
Maintenance Reason Code
Maintenance Type Code
Network Services Code
Originating Company Identifier
Originating Company Secondary Identifier
Period Count
Plan Coverage Description Text
Plan Sponsor Name
Printer Carriage Control Code
Prior Authorization Number
Prior Authorization Text
Procedure Coding Method
Procedure Modifier
Product/Service ID Qualifier
Provider Address 1
Provider Address 2
Provider City
Provider Code
Provider Contact Name
Provider Contact Number
Provider First Name

Provider Identifier
Provider Last or Organization Name
Provider Middle Name
Provider Name Suffix
Provider Specialty Certification Code
Provider Specialty Code
Provider State
Provider Zip
Quantity Qualifier
Receiver Additional Identifier Description Text
Receiver Additional Identifier
Receiver Provider Additional Identifier Type Code
Receiver Provider Additional Identifier
Receiver Trace Number
Reference Identification Qualifier
Reject Reason Code
Relationship To Insured Code
Sample Selection Modulus
Service Type Code
Service Unit Count
Ship/Delivery or Calendar Pattern Code
Ship/Delivery Pattern Time Code
Source Additional Reference Identifier
Source City Name
Source Organization Name
Source Postal Zip Code
Source Primary Identification Number
Source State Code
Source Street Address
Spend Down Amount
Student Status Code
Subscriber Additional Identifier
Subscriber Additional Information Text
Subscriber Benefit Date
Subscriber Birth Date
Subscriber Card Issue Date
Subscriber City
Subscriber Contact Name
Subscriber Contact Phone Number
Subscriber First Address Line
Subscriber First Name
Subscriber Gender Code
Subscriber Identifier
Subscriber Last Name
Subscriber Middle Name
Subscriber Name Suffix
Subscriber Postal ZIP Code
Subscriber Second Address Line
Subscriber State
Time Period Qualifier
Trace Assigning Entity Additional Number
Trace Assigning Entity Number
Trace Number
Trace Type Code
Transaction Segment Count
Transaction Set Control Number
Transaction Set Identifier Code
Transaction Set Purpose Code
Transaction Type Code
Unit or Basis for Measurement Code
Valid Request Indicator Code
Value Added Network Trace Number

Addendum 7—Health Plan Premium Payment

The transaction selected for the health plan premium payment is ASC X12N 820—Payment Order/Remittance Advice Transaction Set (004010X061).

A. Implementation Guide and Source

The source of the implementation guide for the health plan premium payment transaction set is: Washington Publishing Company, 806 W. Diamond Ave., Suite 400, Gaithersburg, MD, 20878, Telephone 301–590–9337, FAX: 301–869–9460. The website address is http://www.wpc-edi.com/hipaa/

B. Data Elements

Account Number Qualifier
Adjustment Reason Code
Assigned Number
Billed Premium Amount
Contact Function Code
Contract or Invoice or Account Number
Country Code
Coverage Period Date
Credit/Debit Flag Code
Currency Code
Date Time Period Format Qualifier
Date/Time Qualifier
Depository Financial Institution (DFI) Identifier
Depository Financial Institution (DFI) ID Number Qualifier
Employee Identification Number
Entity Identifier Code
Exchange Rate
Funds Issued Date
Head Count
Identification Code Qualifier
Individual Identifier
Information Only Indicator Code
Information Receiver City
Information Receiver Last or Organization Name
Information Receiver State
Information Receiver ZIP Code
Insurance Policy or Plan Identifier
Line Item Control Number
Organization Premium Identification Code
Originating Company Identifier
Originating Company Supplemental Code
Payer Additional Name
Payer City Name
Payer Contact Name
Payer Identifier
Payer Name
Payer Process Date
Payer Second Address Line
Payer State Code
Payer ZIP Code
Payment Action Code
Payment Format Code
Payment Method Code
Payroll Processor Additional Name
Payroll Processor City Name
Payroll Processor Contact Name
Payroll Processor First Address Line
Payroll Processor Identifier
Payroll Processor Name
Payroll Processor Second Address Line
Payroll Processor State Code
Payroll Processor ZIP Code
Policy Level Individual Name
Premium Delivery Date
Premium Payment Amount
Premium Receiver First Address Line
Premium Receiver Reference Identifier
Premium Receiver Second Address Line
Receiver Account Number
Receiver Additional Name
Receiver Identifier
Reference Identification Qualifier
Sender Account Number
Trace Number
Trace Type Code
Transaction Handling Code
Transaction Segment Count
Transaction Set Control Number
Transaction Set Identifier Code
Unit or Basis for Measurement Code

Addendum 8—Referral Certification and Authority

The transaction selected for the referral certification and authority is ASC X12N 278—Health Care Services Review Information (004010X094).

A. Implementation Guide and Source

The source of the implementation guide for the referral certification and authority is: Washington Publishing Company, 806 W. Diamond Ave., Suite 400, Gaithersburg, MD, 20878, Telephone 301–590–9337, FAX: 301–869–9460. The website address is http://www.wpc-edi.com/hipaa/

B. Data Elements

Action Code
Admission Source Code
Admission Type Code
Agency Qualifier Code
Ambulance Transport Code
Ambulance Transport Reason Code
Ambulance Trip Destination Address
Ambulance Trip Origin Address
Arterial Blood Gas Quantity
Certification Condition Indicator
Certification Expiration Date
Certification Number
Certification Type Code
Chiropractic Series Treatment Number
Citizenship Status Code
Code Category
Code List Qualifier Code
Communication Number Qualifier
Complication Indicator
Condition Codes
Contact Function Code
Country Code
Creation Date
Current Health Condition Code
Daily Oxygen Use Count
Date Time Period Format Qualifier
Date/Time Qualifier
Delay Reason Code
Dependent Additional Identification Text
Dependent Additional Identifier
Dependent Birth Date
Dependent Citizenship Country Code
Dependent First Name
Dependent Gender Code
Dependent Identification Code
Dependent Last Name
Dependent Marital Status Code
Dependent Middle Name
Dependent Name Prefix
Dependent Name Suffix
Dependent Trace Number
Diagnosis Code
Diagnosis Date
Diagnosis Type Code
Entity Identifier Code
Entity Type Qualifier
Equipment Reason Description
Facility Code Qualifier
Facility Type Code
File Creation Time
Follow-up Action Code
Free-Form Message Text
Full Destination Address
Full Origin Address
Hierarchical Child Code
Hierarchical ID Number

Hierarchical Level Code
Hierarchical Parent ID Number
Hierarchical Structure Code
Home Health Certification Period
Identification Code Qualifier
Information Release Code
Insured Indicator
Last Admission Date
Last Visit Date
Level of Service Code
Medicare Coverage Indicator
Monthly Treatment Count
Nature of Condition Code
Nursing Home Residential Status Code
Originator Application Transaction Identifier
Oxygen Delivery System Code
Oxygen Equipment Type Code
Oxygen Flow Rate
Oxygen Saturation Quantity
Oxygen Test Condition Code
Oxygen Test Findings Code
Oxygen Use Period Hour Count
Patient Condition Description Text
Patient Discharge Facility Type Code
Patient Status Code
Patient Weight
Period Count
Physician Contact Date
Physician Order Date
Portable Oxygen System Flow Rate
Previous Certification Identifier
Procedure Date
Procedure Monetary Amount
Procedure Quantity
Product/Service ID Qualifier
Product/Service Procedure Code Text
Product/Service Procedure Code
Prognosis Code
Proposed Admission Date
Proposed Discharge Date
Proposed Surgery Date
Provider Code
Provider Contact Name
Provider Identifier
Provider Service State Code
Provider Specialty Certification Code
Provider Specialty Code
Quantity Qualifier
Race or Ethnicity Code
Reference Identification Qualifier
Reject Reason Code
Related-Causes Code
Relationship To Insured Code
Request Category Code
Requester Address First Address Line
Requester Address Second Address Line
Requester City Name
Requester Contact Communication Number
Requester Contact Name
Requester Country Code
Requester First Name
Requester Identifier
Requester Last or Organization Name
Requester Middle Name
Requester Name Prefix
Requester Name Suffix
Requester Postal Code
Requester State or Province Code
Requester Supplemental Identifier
Respiratory Therapist Order Text
Round Trip Purpose Description Text
Sample Selection Modulus
Second Surgical Opinion Indicator
Service Authorization Date
Service From Date
Service Provider City Name
Service Provider Contact Communication Number
Service Provider Country Code
Service Provider First Address Line
Service Provider First Name
Service Provider Identifier
Service Provider Last or Organization Name
Service Provider Middle Name
Service Provider Name Prefix
Service Provider Name Suffix
Service Provider Postal Code
Service Provider Second Address Line
Service Provider State or Province Code
Service Provider Supplemental Identifier
Service Trace Number
Service Type Code
Service Unit Count
Ship/Delivery or Calendar Pattern Code
State Code
Stretcher Purpose Description Text
Subluxation Level Code
Subscriber Additional Identifier
Subscriber Additional Information Text
Subscriber Birth Date
Subscriber Citizenship Country Code
Subscriber First Name
Subscriber Gender Code
Subscriber Identifier
Subscriber Last Name
Subscriber Marital Status Code
Subscriber Middle Name
Subscriber Name Prefix
Subscriber Name Suffix
Subscriber Trace Number
Surgery Date
Surgical Procedure Code
Time Period Qualifier
Trace Type Code
Transaction Segment Count
Transaction Set Control Number
Transaction Set Identifier Code
Transaction Set Purpose Code
Transaction Type Code
Transport Distance
Treatment Count
Treatment Period Count
Treatment Series Number
Unit or Basis for Measurement Code
Utilization Management Organization (UMO) or Last Name
Utilization Management Organization (UMO) First Address Line
Utilization Management Organization (UMO) First Name
Utilization Management Organization (UMO) Middle Name
Utilization Management Organization (UMO) Name Prefix
Utilization Management Organization (UMO) Name Suffix
Utilization Management Organization (UMO) Second Address Line
Utilization Managment Organization (UMO) City Name
Utilization Managment Organization (UMO) Contact Communication Number
Utilization Managment Organization (UMO) Contact Name
Utilization Managment Organization (UMO) Country Code
Utilization Managment Organization (UMO) Identifier
Utilization Managment Organization (UMO) Postal Code
Utilization Managment Organization (UMO) State or Province Code
Valid Request Indicator Code
Version/Release/Industry Identifier
X-Ray Availability Indicator Code 1861J1 Facility Indicator

[FR Doc. 98–11691 Filed 5–1–98; 9:04 am]

BILLING CODE 4120–01–P

DEPARTMENT OF HEALTH AND HUMAN SERVICES

Office of the Secretary

45 CFR Part 142

[HCFA–0045-P]

RIN 0938–AH99

National Standard Health Care Provider Identifier

AGENCY: Health Care Financing Administration (HCFA), HHS.

ACTION: Proposed rule.

SUMMARY: This rule proposes a standard for a national health care provider identifier and requirements concerning its use by health plans, health care clearinghouses, and health care providers. The health plans, health care clearinghouses, and health care providers would use the identifier, among other uses, in connection with certain electronic transactions.

The use of this identifier would improve the Medicare and Medicaid programs, and other Federal health programs and private health programs, and the effectiveness and efficiency of the health care industry in general, by simplifying the administration of the system and enabling the efficient electronic transmission of certain health information. It would implement some of the requirements of the Administrative Simplification subtitle of the Health Insurance Portability and Accountability Act of 1996.

DATES: Comments will be considered if we receive them at the appropriate address, as provided below, no later than 5 p.m. on July 6, 1998.

ADDRESSES: Mail written comments (1 original and 3 copies) to the following address: Health Care Financing Administration, Department of Health and Human Services, Attention: HCFA–0045-P, P.O. Box 26585, Baltimore, MD 21207–0519.

If you prefer, you may deliver your written comments (1 original and 3 copies) to one of the following addresses:

Room 309–G, Hubert H. Humphrey Building, 200 Independence Avenue, SW., Washington, DC 20201, or

Room C5–09–26, 7500 Security Boulevard, Baltimore, MD 21244–1850.

Comments may also be submitted electronically to the following e-mail address: NPI@osaspe.dhhs.gov. E-mail comments should include the full name, postal address, and affiliation (if applicable) of the sender and must be submitted to the referenced address to be considered. All comments should be incorporated in the e-mail message because we may not be able to access attachments.

Because of staffing and resource limitations, we cannot accept comments by facsimile (FAX) transmission. In commenting, please refer to file code HCFA–0045–P and the specific section or sections of the proposed rule. Both electronic and written comments received by the time and date indicated above will be available for public inspection as they are received, generally beginning approximately 3 weeks after publication of a document, in Room 309–G of the Department's offices at 200 Independence Avenue, SW., Washington, DC, on Monday through Friday of each week from 8:30 a.m. to 5 p.m. (phone: (202) 690–7890). Electronic and legible written comments will also be posted, along with this proposed rule, at the following web site: http://aspe.os.dhhs.gov/admnsimp/.

Copies: To order copies of the **Federal Register** containing this document, send your request to: New Orders, Superintendent of Documents, P.O. Box 371954, Pittsburgh, PA 15250–7954. Specify the date of the issue requested and enclose a check or money order payable to the Superintendent of Documents, or enclose your Visa or Master Card number and expiration date. Credit card orders can also be placed by calling the order desk at (202) 512–1800 or by faxing to (202) 512–2250. The cost for each copy is $8. As an alternative, you can view and photocopy the **Federal Register** document at most libraries designated as Federal Depository Libraries and at many other public and academic libraries throughout the country that receive the **Federal Register**.

This **Federal Register** document is also available from the **Federal Register** online database through GPO Access, a service of the U.S. Government Printing Office. Free public access is available on a Wide Area Information Server (WAIS) through the Internet and via asynchronous dial-in. Internet users can access the database by using the World Wide Web; the Superintendent of Documents home page address is http://www.access.gpo.gov/su_docs/, by using local WAIS client software, or by telnet to swais.access.gpo.gov, then login as guest (no password required). Dial-in users should use communications software and modem to call 202–512–1661; type swais, then login as guest (no password required).

FOR FURTHER INFORMATION CONTACT: Patricia Peyton, (410) 786–1812.

SUPPLEMENTARY INFORMATION:

I. Background

[Please label written and e-mailed comments about this section with the subject: Background.]

In order to administer their programs, the Department of Health and Human Services, other Federal agencies, State Medicaid agencies, and private health plans assign identification numbers to the providers of health care services and supplies with which they transact business. These various agencies and health plans, all of which we will refer to as health plans in this proposed rule, routinely, and independently of each other, assign identifiers to health care providers for program management and operations purposes. The identifiers are frequently not standardized within a single health plan or across plans. This lack of uniformity results in a single health care provider having different numbers for each program and often multiple billing numbers issued within the same program, significantly complicating providers' claims submission processes. In addition, nonstandard enumeration contributes to the unintentional issuance of the same identification number to different health care providers.

Most health plans have to be able to coordinate benefits with other health plans to ensure appropriate payment. The lack of a single and unique identifier for each health care provider within each health plan and across health plans, based on the same core data, makes exchanging data both expensive and difficult.

All of these factors indicate the complexities of exchanging information on health care providers within and among organizations and result in increasing numbers of claims-related problems and increasing costs of data processing. As we become more dependent on data automation and proceed in planning for health care in the future, the need for a universal, standard health care provider identifier becomes more and more evident.

In addition to overcoming communication and coordination difficulties, use of a standard, unique provider identifier would enhance our ability to eliminate fraud and abuse in health care programs.

- Payments for excessive or fraudulent claims can be reduced by standardizing enumeration, which would facilitate sharing information across programs or across different parts of the same program.
- A health care provider's identifier would not change with moves or changes in specialty. This facilitates tracking of fraudulent health care providers over time and across geographic areas.
- A health care provider would receive only one identifier and would not be able to receive duplicate payments from a program by submitting claims under multiple provider identifiers.
- A standard identifier would facilitate access to sanction information.

A. National Provider Identifier Initiative

In July 1993, the Health Care Financing Administration (HCFA) undertook a project to develop a provider identification system to meet Medicare and Medicaid needs and ultimately a national identification system for all health care providers to meet the needs of other users and programs. Representatives from the private sector and Federal and State agencies were invited to participate. Active participants included:

- Department of Defense, Office of Civilian Health and Medical Program of the Uniformed Services.
- Assistant Secretary for Planning and Evaluation, HHS.
- Department of Labor.
- Department of Veterans Affairs.
- Office of Personnel Management.
- Public Health Service, HHS.
- Drug Enforcement Administration
- State Medicaid agencies and health departments including those of Alabama, California, Maryland, Minnesota and Virginia.
- Medicare carriers and fiscal intermediaries.
- Professional and medical associations, including the National Council for Prescription Drug Programs.

One of the group's first tasks was to decide whether to use an existing identifier or to develop a new one. They began by adopting criteria recommended for a unique provider identifier by the Workgroup for Electronic Data Interchange (WEDI), Technical Advisory Group in October 1993, and recommended by the American National Standards Institute (ANSI), Healthcare Informatics Standards Planning Panel, Task Group on Provider Identifiers in February 1994. The workgroup then examined existing identifiers and concluded that no existing identifier met all the criteria that had been recommended by the WEDI and ANSI workgroups.

Because of the limitations of existing identifiers, the workgroup designed a

new identifier that would be in the public domain and that would incorporate the recommendations of the WEDI and ANSI workgroups. This identifier, which we call the national provider identifier, or NPI, is an 8-position alphanumeric identifier.

B. The Results of the NPI Initiative

As a result of the project on the NPI, and before legislation required the use of the standard identifier for all health care providers (see section I.C. Legislation, below), HCFA and other participants accepted the workgroup's recommendation, and HCFA decided that this new identifier would be implemented in the Medicare program. HCFA began work on developing a national provider system (NPS) that would contain provider data and be equipped with the technology necessary to maintain and manage the data. Plans for the NPS included assigning the NPI and storing the data necessary to identify each health care provider uniquely. The NPI was designed to have no embedded intelligence. (That is, information about the health care provider, such as the type of health care provider or State where the health care provider is located, would not be conveyed by the NPI. This information was to have been recorded by the NPS in each health care provider's record but would not be part of the identifier.)

The NPS was designed so that it could also be used by other Federal and State agencies and private health plans to enumerate their health care providers that do not participate in Medicare.

C. Legislation

The Congress included provisions to address the need for a standard identifier and other administrative simplification issues in the Health Insurance Portability and Accountability Act of 1996 (HIPAA), Public Law 104–191, which was enacted on August 21, 1996. Through subtitle F of title II of that law, the Congress added to title XI of the Social Security Act a new part C, entitled ''Administrative Simplification.'' (Public Law 104–191 affects several titles in the United States Code. Hereafter, we refer to the Social Security Act as the Act; we refer to the other laws cited in this document by their names.) The purpose of this part is to improve the Medicare and Medicaid programs in particular and the efficiency and effectiveness of the health care system in general by encouraging the development of a health information system through the establishment of standards and requirements to facilitate the electronic transmission of certain health information.

Part C of title XI consists of sections 1171 through 1179 of the Act. These sections define various terms and impose several requirements on HHS, health plans, health care clearinghouses, and certain health care providers concerning electronic transmission of health information.

The first section, section 1171 of the Act, establishes definitions for purposes of part C of title XI for the following terms: code set, health care clearinghouse, health care provider, health information, health plan, individually identifiable health information, standard, and standard setting organization.

Section 1172 of the Act makes any standard adopted under part C applicable to (1) all health plans, (2) all health care clearinghouses, and (3) any health care providers that transmit any health information in electronic form in connection with the transactions referred to in section 1173(a)(1) of the Act.

This section also contains requirements concerning standard setting.

- The Secretary may adopt a standard developed, adopted, or modified by a standard setting organization (that is, an organization accredited by the American National Standards Institute (ANSI)) that has consulted with the National Uniform Billing Committee (NUBC), the National Uniform Claim Committee (NUCC), WEDI, and the American Dental Association (ADA).
- The Secretary may also adopt a standard other than one established by a standard setting organization, if the different standard will reduce costs for health care providers and health plans, the different standard is promulgated through negotiated rulemaking procedures, and the Secretary consults with each of the above-named groups.
- If no standard has been adopted by any standard setting organization, the Secretary is to rely on the recommendations of the National Committee on Vital and Health Statistics (NCVHS) and consult with each of the above-named groups.

In complying with the requirements of part C of title XI, the Secretary must rely on the recommendations of the NCVHS, consult with appropriate State, Federal, and private agencies or organizations, and publish the recommendations of the NCVHS in the **Federal Register**.

Paragraph (a) of section 1173 of the Act requires that the Secretary adopt standards for financial and administrative transactions, and data elements for those transactions, to enable health information to be exchanged electronically. Standards are required for the following transactions: health claims, health encounter information, health claims attachments, health plan enrollments and disenrollments, health plan eligibility, health care payment and remittance advice, health plan premium payments, first report of injury, health claim status, and referral certification and authorization. In addition, the Secretary is required to adopt standards for any other financial and administrative transactions that are determined to be appropriate by the Secretary.

Paragraph (b) of section 1173 of the Act requires the Secretary to adopt standards for unique health identifiers for all individuals, employers, health plans, and health care providers and requires further that the adopted standards specify for what purposes unique health identifiers may be used.

Paragraphs (c) through (f) of section 1173 of the Act require the Secretary to establish standards for code sets for each data element for each health care transaction listed above, security standards for health care information systems, standards for electronic signatures (established together with the Secretary of Commerce), and standards for the transmission of data elements needed for the coordination of benefits and sequential processing of claims. Compliance with electronic signature standards will be deemed to satisfy both State and Federal requirements for written signatures with respect to the transactions listed in paragraph (a) of section 1173 of the Act.

In section 1174 of the Act, the Secretary is required to adopt standards for all of the above transactions, except claims attachments, within 18 months of enactment. The standards for claims attachments must be adopted within 30 months of enactment. Generally, after a standard is established it cannot be changed during the first year except for changes that are necessary to permit compliance with the standard. Modifications to any of these standards may be made after the first year, but not more frequently than once every 12 months. The Secretary must also ensure that procedures exist for the routine maintenance, testing, enhancement, and expansion of code sets and that there are crosswalks from prior versions.

Section 1175 of the Act prohibits health plans from refusing to process or delaying the processing of a transaction that is presented in standard format. The Act's requirements are not limited to health plans; however, each person to whom a standard or implementation

specification applies is required to comply with the standard within 24 months (or 36 months for small health plans) of its adoption. A health plan or other entity may, of course, comply voluntarily before the effective date. Entities may comply by using a health care clearinghouse to transmit or receive the standard transactions. Compliance with modifications and implementation specifications to standards must be accomplished by a date designated by the Secretary. This date may not be earlier than 180 days after the notice of change.

Section 1176 of the Act establishes a civil monetary penalty for violation of the provisions in part C of title XI of the Act, subject to several limitations. The Secretary is required by statute to impose penalties of not more than $100 per violation on any person who fails to comply with a standard, except that the total amount imposed on any one person in each calendar year may not exceed $25,000 for violations of one requirement. The procedural provisions in section 1128A of the Act, ''Civil Monetary Penalties,'' are applicable.

Section 1177 of the Act establishes penalties for a knowing misuse of unique health identifiers and individually identifiable health information: (1) A fine of not more than $50,000 and/or imprisonment of not more than 1 year; (2) if misuse is ''under false pretenses,'' a fine of not more than $100,000 and/or imprisonment of not more than 5 years; and (3) if misuse is with intent to sell, transfer, or use individually identifiable health information for commercial advantage, personal gain, or malicious harm, a fine of not more than $250,000 and/or imprisonment of not more than 10 years.

Under section 1178 of the Act, the provisions of part C of title XI of the Act, as well as any standards established under them, supersede any State law that is contrary to them. However, the Secretary may, for statutorily specified reasons, waive this provision.

Finally, section 1179 of the Act makes the above provisions inapplicable to financial institutions or anyone acting on behalf of a financial institution when ''authorizing, processing, clearing, settling, billing, transferring, reconciling, or collecting payments for a financial institution.''

(Concerning this last provision, the conference report, in its discussion on section 1178, states:

''The conferees do not intend to exclude the activities of financial institutions or their contractors from compliance with the standards adopted under this part if such activities would be subject to this part. However, conferees intend that this part does not apply to use or disclosure of information when an individual utilizes a payment system to make a payment for, or related to, health plan premiums or health care. For example, the exchange of information between participants in a credit card system in connection with processing a credit card payment for health care would not be covered by this part. Similarly sending a checking account statement to an account holder who uses a credit or debit card to pay for health care services, would not be covered by this part. However, this part does apply if a company clears health care claims, the health care claims activities remain subject to the requirements of this part.'') (H.R. Rep. No. 736, 104th Cong., 2nd Sess. 268–269 (1996))

D. Process for Developing National Standards

The Secretary has formulated a 5-part strategy for developing and implementing the standards mandated under Part C of title XI of the Act:

1. To ensure necessary interagency coordination and required interaction with other Federal departments and the private sector, establish interdepartmental implementation teams to identify and assess potential standards for adoption. The subject matter of the teams includes claims/encounters, identifiers, enrollment/eligibility, systems security, and medical coding/classification. Another team addresses cross-cutting issues and coordinates the subject matter teams. The teams consult with external groups such as the NCVHS' Workgroup on Data Standards, WEDI, ANSI's Health Informatics Standards Board, the NUCC, the NUBC, and the ADA. The teams are charged with developing regulations and other necessary documents and making recommendations for the various standards to the HHS' Data Council through its Committee on Health Data Standards. (The HHS Data Council is the focal point for consideration of data policy issues. It reports directly to the Secretary and advises the Secretary on data standards and privacy issues.)

2. Develop recommendations for standards to be adopted.

3. Publish proposed rules in the **Federal Register** describing the standards. Each proposed rule provides the public with a 60-day comment period.

4. Analyze public comments and publish the final rules in the **Federal Register**.

5. Distribute standards and coordinate preparation and distribution of implementation guides.

This strategy affords many opportunities for involvement of interested and affected parties in standards development and adoption:

- Participate with standards development organizations.
- Provide written input to the NCVHS.
- Provide written input to the Secretary of HHS.
- Provide testimony at NCVHS' public meetings.
- Comment on the proposed rules for each of the proposed standards.
- Invite HHS staff to meetings with public and private sector organizations or meet directly with senior HHS staff involved in the implementation process.

The implementation teams charged with reviewing standards for designation as required national standards under the statute have defined, with significant input from the health care industry, a set of principles for guiding choices for the standards to be adopted by the Secretary. These principles are based on direct specifications in HIPAA and the purpose of the law, principles that are consistent with the regulatory philosophy set forth in Executive Order 12866 and the Paperwork Reduction Act of 1995. To be designated as a HIPAA standard, each standard should:

1. Improve the efficiency and effectiveness of the health care system by leading to cost reductions for or improvements in benefits from electronic health care transactions.

2. Meet the needs of the health data standards user community, particularly health care providers, health plans, and health care clearinghouses.

3. Be consistent and uniform with the other HIPAA standards—their data element definitions and codes and their privacy and security requirements—and, secondarily, with other private and public sector health data standards.

4. Have low additional development and implementation costs relative to the benefits of using the standard.

5. Be supported by an ANSI-accredited standards developing organization or other private or public organization that will ensure continuity and efficient updating of the standard over time.

6. Have timely development, testing, implementation, and updating procedures to achieve administrative simplification benefits faster.

7. Be technologically independent of the computer platforms and transmission protocols used in electronic transactions, except when they are explicitly part of the standard.

8. Be precise and unambiguous, but as simple as possible.

9. Keep data collection and paperwork burdens on users as low as is feasible.

10. Incorporate flexibility to adapt more easily to changes in the health care infrastructure (such as new services, organizations, and provider types) and information technology.

A master data dictionary providing for common data definitions across the standards selected for implementation under HIPAA will be developed and maintained. We intend for the data element definitions to be precise, unambiguous, and consistently applied. The transaction-specific reports and general reports from the master data dictionary will be readily available to the public. At a minimum, the information presented will include data element names, definitions, and appropriate references to the transactions where they are used.

This proposed rule would establish the standard health care provider identifier and is the first proposed standard under HIPAA. The remaining standards will be grouped, to the extent possible, by subject matter and audience in future regulations. We anticipate publishing several more separate documents to promulgate the remaining standards required under HIPAA.

II. Provisions of the Proposed Regulations

[Please label written and e-mailed comments about this section with the subject: Provisions.]

In this proposed rule, we propose a standard health care provider identifier and requirements concerning its implementation. This rule would establish requirements that health plans, health care providers, and health care clearinghouses would have to meet to comply with the statutory requirement to use a unique identifier in electronic transactions.

We propose to add a new part to title 45 of the Code of Federal Regulations for health plans, health care providers, and health care clearinghouses in general. The new part would be part 142 of title 45 and would be titled ''Administrative Requirements.'' Subpart D would contain provisions specific to the NPI.

A. Applicability

Section 262 of HIPAA applies to all health plans, all health care clearinghouses, and any health care providers that transmit any health information in electronic form in connection with transactions referred to in section 1173(a)(1) of the Act. Our proposed rules (at 45 CFR 142.102) would apply to the health plans and health care clearinghouses as well, but we would clarify the statutory language in our regulations for health care providers: we would have the regulations apply to any health care provider only when electronically transmitting any of the transactions to which section 1173(a)(1) of the Act refers.

Electronic transmissions would include transmissions using all media, even when the transmission is physically moved from one location to another using magnetic tape, disk, or CD media. Transmissions over the Internet (wide-open), Extranet (using Internet technology to link a business with information only accessible to collaborating parties), leased lines, dial-up lines, and private networks are all included. Telephone voice response and ''faxback'' systems would not be included. The ''HTML'' interaction between a server and a browser by which the elements of a transaction are solicited from a user would not be included, but once assembled into a transaction by the server, transmission of the full transaction to another corporate entity, such as a health plan, would be required to comply.

Our regulations would apply to health care clearinghouses when transmitting transactions to, and receiving transactions from, a health care provider or health plan that transmits and receives standard transactions (as defined under ''transaction'') and at all times when transmitting to or receiving electronic transactions from another health care clearinghouse. The law would apply to each health care provider when transmitting or receiving any electronic transaction.

The law applies to health plans for all transactions.

Section 142.104 would contain the following provisions (from section 1175 of the Act):

If a person desires to conduct a transaction (as defined in § 142.103) with a health plan as a standard transaction, the following apply:

(1) The health plan may not refuse to conduct the transaction as a standard transaction.

(2) The health plan may not delay the transaction or otherwise adversely affect, or attempt to adversely affect, the person or the transaction on the ground that the transaction is a standard transaction.

(3) The information transmitted and received in connection with the transaction must be in the form of standard data elements of health information.

As a further requirement, we would require that a health plan that conducts transactions through an agent assure that the agent meets all the requirements of part 142 that apply to the health plan.

Section 142.105 would state that a person or other entity may meet the requirements of § 142.104 by either—

(1) Transmitting and receiving standard data elements, or

(2) Submitting nonstandard data elements to a health care clearinghouse for processing into standard data elements and transmission by the health care clearinghouse and receiving standard data elements through the clearinghouse.

Health care clearinghouses would be able to accept nonstandard transactions for the sole purpose of translating them into standard transactions for sending customers and would be able to accept standard transactions and translate them into nonstandard formats for receiving customers. We would state in § 142.105 that the transmission of nonstandard transactions, under contract, between a health plan or a health care provider and a health care clearinghouse would not violate the law.

Transmissions within a corporate entity would not be required to comply with the standards. A hospital that is wholly owned by a managed care company would not have to use the standards to pass encounter information back to the home office, but it would have to use the standard claims transaction to submit a claim to another health plan. Another example might be transactions within Federal agencies and their contractors and between State agencies within the same State. For example, Medicare enters into contracts with insurance companies and common working file sites that process Medicare claims using government furnished software. There is constant communication, on a private network, between HCFA Central Office and the Medicare carriers, intermediaries and common working file sites. This communication may continue in nonstandard mode. However, these contractors must comply with the standards when exchanging any of the transactions covered by HIPAA with an entity outside these ''corporate'' boundaries.

B. Definitions

Section 1171 of the Act defines several terms and our proposed rules would, for the most part, simply restate the law. The terms that we are defining in this proposed rule follow:

1. Code set.

We would define ''code set'' as section 1171(1) of the Act does: ''code set'' means any set of codes used for encoding data elements, such as tables of terms, medical concepts, medical diagnostic codes, or medical procedure codes.

2. Health care clearinghouse.

We would define ''health care clearinghouse'' as section 1171(2) of the Act does, but we are adding a further, clarifying sentence. The statute defines a ''health care clearinghouse'' as a public or private entity that processes or facilitates the processing of nonstandard data elements of health information into standard data elements. We would further explain that such an entity is one that currently receives health care transactions from health care providers and other entities, translates the data from a given format into one acceptable to the intended recipient and forwards the processed transaction to appropriate health plans and other clearinghouses, as necessary, for further action.

There are currently a number of private clearinghouses that perform these functions for health care providers. For purposes of this rule, we would consider billing services, repricing companies, community health management information systems or community health information systems, value-added networks, and switches performing these functions to be health care clearinghouses.

3. Health care provider.

As defined by section 1171(3) of the Act, a ''health care provider'' is a provider of services as defined in section 1861(u) of the Act, a provider of medical or other health services as defined in section 1861(s) of the Act, and any other person who furnishes health care services or supplies. Our regulations would define ''health care provider'' as the statute does and clarify that the definition of a health care provider is limited to those entities that furnish, or bill and are paid for, health care services in the normal course of business.

The statutory definition of a health care provider is broad. Section 1861(u) contains the Medicare definition of a provider, which encompasses institutional providers such as hospitals, skilled nursing facilities, home health agencies, and comprehensive outpatient rehabilitation facilities. Section 1861(s) defines other Medicare facilities and practitioners, including assorted clinics and centers, physicians, clinical laboratories, various licensed/certified health care practitioners, and suppliers of durable medical equipment. The last portion of the definition encompasses any appropriately licensed or certified health care practitioners or organizations, including pharmacies and nursing homes and many types of therapists, technicians, and aides. It also includes any other individual or organization that furnishes health care services or supplies. We believe that an individual or organization that bills and is paid for health care services or supplies is also a health care provider for purposes of the statute.

Section 1173(b)(1) of the Act requires the Secretary to adopt standards for unique identifiers for all health care providers. The definition of a ''health care provider'' at section 1171(3) includes all Medicare providers and ''any other person furnishing health care services and supplies.'' These two provisions require that provider identifiers may not be limited to only those health care providers that bill electronically or those that bill in their own right. Instead provider identifiers will eventually be available to all those that provide health services. Penalties for failure to use the correct identifiers, however, are limited to those that fail to use the identifiers or other standards in the nine designated electronic transactions. As we discuss under a later section in this preamble, **III. Implementation of the NPI,** we do not expect to be able to assign identifiers immediately to all health care providers that do not participate in electronic transactions.

Our proposed definition of a health care provider would not include health industry workers who support the provision of health care but who do not provide health services, such as admissions and billing personnel, housekeeping staff, and orderlies.

We describe two alternatives for defining general categories of health care providers for enumeration purposes. In the first, we would categorize health care providers as individuals, organizations, or groups. In the second, we would categorize health care providers as individuals or organizations, which would include groups. The data to be collected for each category of health care provider are described in the preamble in section IV. B. *Data Elements.* We welcome your comments on whether group providers need to be distinguished from organization providers.

Individuals are treated differently than organizations and groups because the data available to search for duplicates (for example, date and place of birth) are different. Organizations and groups may need to be treated differently from each other because it is possible that a group is not specifically licensed or certified to provide health care, whereas an organization usually is. It may, therefore, be important to be able to link the individual members to the group. It would not be possible to distinguish one category from another by looking at the NPI. The NPS would contain the kinds of data necessary to adequately categorize each health care provider.

The categories are described as follows:

Individual—A human being who is licensed, certified or otherwise authorized to perform medical services or provide medical care, equipment and/or supplies in the normal course of business. Examples of individuals are physicians, nurses, dentists, pharmacists, and physical therapists.

Organization—An entity, other than an individual, that is licensed, certified or otherwise authorized to provide medical services, care, equipment or supplies in the normal course of business. The licensure, certification, or other recognition is granted to the organization entity. Individual owners, managers, or employees of the organization may also be certified, licensed, or otherwise recognized as individual health care providers in their own right. Each separate physical location of an organization, each member of an organization chain, and each subpart of an organization that needs to be identified would receive its own NPI. NPIs of organization providers would not be linked within the NPS to NPIs of other health care providers. Examples of organizations are hospitals, laboratories, ambulance companies, health maintenance organizations, and pharmacies.

In the first alternative for categorizing health care providers, as described above, we would distinguish a group from an organization. We would define a group as follows:

Group—An entity composed of one or more individuals (as defined above), generally created to provide coverage of patients' needs in terms of office hours, professional backup and support, or range of services resulting in specific billing or payment arrangements. It is possible that the group itself is not licensed or certified, but the individual(s) who compose the group are licensed, certified or otherwise authorized to provide health care services. The NPIs of the group member(s) would be linked within the NPS to the NPI of the group. An individual can be a member of multiple groups. Examples of groups are (1) two physicians practicing as a group where they bill and receive payment for their services as a group and (2) an incorporated individual billing and receiving payment as a corporation.

The ownership of a group or organization can change if it is sold, consolidated, or merged, or if control changes due to stock acquisition. In many cases, the nature of the provider

itself (for example, its location, staff or types of services provided) is not affected. In general, the NPI of the provider should not change in these situations unless the change of ownership affects the nature of the provider. (Example: If a hospital is acquired and then converted to a rehabilitation center, it would need to obtain a new NPI.) There may also be circumstances where a new NPI should be issued. (Example: a physicians' group practice operating as a partnership dissolves that partnership and another partnership of physicians acquires and operates the practice.) We solicit comments on rules to be applied.

We discuss the enumeration of health care providers in more detail, in **III. Implementation of the NPI,** later in this preamble.

4. Health information.

''Health information,'' as defined in section 1171 of the Act, means any information, whether oral or recorded in any form or medium, that—

- Is created or received by a health care provider, health plan, public health authority, employer, life insurer, school or university, or health care clearinghouse; and
- Relates to the past, present, or future physical or mental health or condition of an individual; the provision of health care to an individual; or the past, present, or future payment for the provision of health care to an individual.

We propose the same definition for our regulations.

5. Health plan.

We propose that a ''health plan'' be defined essentially as section 1171 of the Act defines it. Section 1171 of the Act cross refers to definitions in section 2791 of the Public Health Service Act (as added by Public Law 104–191, 42 U.S.C. 300gg-91); we would incorporate those definitions as currently stated into our proposed definitions for the convenience of the public. We note that many of these terms are defined in other statutes, such as the Employee Retirement Income Security Act of 1974 (ERISA), Public Law 93–406, 29 U.S.C. 1002(7) and the Public Health Service Act. Our definitions are based on the roles of plans in conducting administrative transactions, and any differences should not be construed to affect other statutes.

For purposes of implementing the provisions of administrative simplification, a ''health plan'' would be an individual or group health plan that provides, or pays the cost of, medical care. This definition includes, but is not limited to, the 13 types of plans listed in the statute. On the other hand, plans such as property and casualty insurance plans and workers compensation plans, which may pay health care costs in the course of administering nonhealth care benefits, are not considered to be health plans in the proposed definition of health plan. Of course, these plans may voluntarily adopt these standards for their own business needs. At some future time, the Congress may choose to expressly include some or all of these plans in the list of health plans that must comply with the standards.

Health plans often carry out their business functions through agents, such as plan administrators (including third party administrators), entities that are under ''administrative services only'' (ASO) contracts, claims processors, and fiscal agents. These agents may or may not be health plans in their own right; for example, a health plan may act as another health plan's agent as another line of business. As stated earlier, a health plan that conducts HIPAA transactions through an agent is required to assure that the agent meets all HIPAA requirements that apply to the plan itself.

''Health plan'' includes the following, singly or in combination:

a. ''Group health plan'' (as currently defined by section 2791(a) of the Public Health Service Act). A group health plan is a plan that has 50 or more participants (as the term ''participant'' is currently defined by section 3(7) of ERISA) or is administered by an entity other than the employer that established and maintains the plan. This definition includes both insured and self-insured plans. We define ''participant'' separately below.

Section 2791(a)(1) of the Public Health Service Act defines ''group health plan'' as an employee welfare benefit plan (as currently defined in section 3(1) of ERISA) to the extent that the plan provides medical care, including items and services paid for as medical care, to employees or their dependents directly or through insurance, or otherwise.

It should be noted that group health plans that have fewer than 50 participants and that are administered by the employer would be excluded from this definition and would not be subject to the administrative simplification provisions of HIPAA.

b. ''Health insurance issuer'' (as currently defined by section 2791(b) of the Public Health Service Act).

Section 2791(b)(2) of the Public Health Service Act currently defines a ''health insurance issuer'' as an insurance company, insurance service, or insurance organization that is licensed to engage in the business of insurance in a State and is subject to State law that regulates insurance.

c. ''Health maintenance organization'' (as currently defined by section 2791(b) of the Public Health Service Act).

Section 2791(b) of the Public Health Service Act currently defines a ''health maintenance organization'' as a Federally qualified health maintenance organization, an organization recognized as such under State law, or a similar organization regulated for solvency under State law in the same manner and to the same extent as such a health maintenance organization. These organizations may include preferred provider organizations, provider sponsored organizations, independent practice associations, competitive medical plans, exclusive provider organizations, and foundations for medical care.

d. Part A or Part B of the Medicare program (title XVIII of the Act).

e. The Medicaid program (title XIX of the Act).

f. A ''Medicare supplemental policy'' as defined under section 1882(g)(1) of the Act.

Section 1882(g)(1) of the Act defines a ''Medicare supplemental policy'' as a health insurance policy that a private entity offers a Medicare beneficiary to provide payment for expenses incurred for services and items that are not reimbursed by Medicare because of deductible, coinsurance, or other limitations under Medicare. The statutory definition of a Medicare supplemental policy excludes a number of plans that are generally considered to be Medicare supplemental plans, such as health plans for employees and former employees and for members and former members of trade associations and unions. A number of these health plans may be included under the definitions of ''group health plan'' or ''health insurance issuer'', as defined in a. and b. above.

g. A ''long-term care policy,'' including a nursing home fixed-indemnity policy. A ''long-term care policy'' is considered to be a health plan regardless of how comprehensive it is. We recognize the long-term care insurance segment of the industry is largely unautomated and we welcome comments regarding the impact of HIPAA on the long-term care segment.

h. An employee welfare benefit plan or any other arrangement that is established or maintained for the purpose of offering or providing health benefits to the employees of two or more employers. This includes plans and other arrangements that are referred to as multiple employer welfare

arrangements (''MEWAs'') as defined in section 3(40) of ERISA.

i. The health care program for active military personnel under title 10 of the United States Code.

j. The veterans health care program under chapter 17 of title 38 of the United States Code.

This health plan primarily furnishes medical care through hospitals and clinics administered by the Department of Veterans Affairs for veterans with a service-connected disability that is compensable. Veterans with non-service-connected disabilities (and no other health benefit plan) may receive health care under this health plan to the extent resources and facilities are available.

k. The Civilian Health and Medical Program of the Uniformed Services (CHAMPUS), as defined in 10 U.S.C. 1072(4).

CHAMPUS primarily covers services furnished by civilian medical providers to dependents of active duty members of the uniformed services and retirees and their dependents under age 65.

l. The Indian Health Service program under the Indian Health Care Improvement Act (25 U.S.C. 1601 *et seq.*).

This program furnishes services, generally through its own health care providers, primarily to persons who are eligible to receive services because they are of American Indian or Alaskan Native descent.

m. The Federal Employees Health Benefits Program under 5 U.S.C. chapter 89.

This program consists of health insurance plans offered to active and retired Federal employees and their dependents. Depending on the health plan, the services may be furnished on a fee-for-service basis or through a health maintenance organization.

(Note: Although section 1171(5)(M) of the Act refers to the ''Federal Employees Health Benefit Plan,'' this and any other rules adopting administrative simplification standards will use the correct name, the Federal Employees Health Benefits Program. One health plan does not cover all Federal employees; there are over 350 health plans that provide health benefits coverage to Federal employees, retirees, and their eligible family members. Therefore, we will use the correct name, the Federal Employees Health Benefits Program, to make clear that the administrative simplification standards apply to all health plans that participate in the Program.)

n. Any other individual or group health plan, or combination thereof, that provides or pays for the cost of medical care.

We would include a fourteenth category of health plan in addition to those specifically named in HIPAA, as there are health plans that do not readily fit into the other categories but whose major purpose is providing health benefits. The Secretary would determine which of these plans are health plans for purposes of title II of HIPAA. This category would include the Medicare Plus Choice plans that will become available as a result of section 1855 of the Act as amended by section 4001 of the Balanced Budget Act of 1997 (Public Law 105–33) to the extent that these health plans do not fall under any other category.

6. Medical care.

''Medical care,'' which is used in the definition of health plan, would be defined as current section 2791 of the Public Health Service Act defines it: the diagnosis, cure, mitigation, treatment, or prevention of disease, or amounts paid for the purpose of affecting any body structure or function of the body; amounts paid for transportation primarily for and essential to these items; and amounts paid for insurance covering the items and the transportation specified in this definition.

7. Participant.

We would define the term ''participant'' as section 3(7) of ERISA currently defines it: a ''participant'' is any employee or former employee of an employer, or any member or former member of an employee organization, who is or may become eligible to receive a benefit of any type from an employee benefit plan that covers employees of such an employer or members of such organizations, or whose beneficiaries may be eligible to receive any such benefits. An ''employee'' would include an individual who is treated as an employee under section 401(c)(1) of the Internal Revenue Code of 1986 (26 U.S.C. 401(c)(1)).

8. Small health plan.

We would define a ''small health plan'' as a group health plan with fewer than 50 participants.

The HIPAA does not define a ''small health plan'' but instead leaves the definition to be determined by the Secretary. The Conference Report suggests that the appropriate definition of a ''small health plan'' is found in current section 2791(a) of the Public Health Service Act, which is a group health plan with fewer than 50 participants. We would also define small individual health plans as those with fewer than 50 participants.

9. Standard.

Section 1171 of the Act defines ''standard,'' when used with reference to a data element of health information or a transaction referred to in section 1173(a)(1) of the Act, as any such data element or transaction that meets each of the standards and implementation specifications adopted or established by the Secretary with respect to the data element or transaction under sections 1172 through 1174 of the Act.

Under our definition, a standard would be a set of rules for a set of codes, data elements, transactions, or identifiers promulgated either by an organization accredited by the American National Standards Institute or HHS for the electronic transmission of health information.

10. Transaction.

''Transaction'' would mean the exchange of information between two parties to carry out financial and administrative activities related to health care. A transaction would be any of the transactions listed in section 1173(a)(2) of the Act and any determined appropriate by the Secretary in accordance with section 1173(a)(1)(B) of the Act. We present them below in the order in which we propose to list them in the regulations text to this document and in the regulations document for proposed standards for these transactions that we will publish later.

A ''transaction'' would mean any of the following:

a. Health claims or equivalent encounter information.

This transaction may be used to submit health care claim billing information, encounter information, or both, from health care providers to health plans, either directly or via intermediary billers and claims clearinghouses.

b. Health care payment and remittance advice.

This transaction may be used by a health plan to make a payment to a financial institution for a health care provider (sending payment only), to send an explanation of benefits or a remittance advice directly to a health care provider (sending data only), or to make payment and send an explanation of benefits remittance advice to a health care provider via a financial institution (sending both payment and data).

c. Coordination of benefits.

This transaction can be used to transmit health care claims and billing payment information between health plans with different payment responsibilities where coordination of benefits is required or between health plans and regulatory agencies to monitor the rendering, billing, and/or

payment of health care services within a specific health care/insurance industry segment.

In addition to the nine electronic transactions specified in section 1173(a)(2) of the Act, section 1173(f) directs the Secretary to adopt standards for transferring standard data elements among health plans for coordination of benefits and sequential processing of claims. This particular provision does not state that these should be standards for electronic transfer of standard data elements among health plans. However, we believe that the Congress, when writing this provision, intended for these standards to apply to the electronic form of transactions for coordination of benefits and sequential processing of claims. The Congress expressed its intent on these matters generally in section 1173(a)(1)(B), where the Secretary is directed to adopt ''other financial and administrative transactions . . . consistent with the goals of improving the operation of the health care system and reducing administrative costs''. Adoption of a standard for electronic transmission of standard data elements among health plans for coordination of benefits and sequential processing of claims would serve these goals expressed by the Congress.

d. Health claim status.

This transaction may be used by health care providers and recipients of health care products or services (or their authorized agents) to request the status of a health care claim or encounter from a health plan.

e. Enrollment and disenrollment in a health plan.

This transaction may be used to establish communication between the sponsor of a health benefit and the health plan. It provides enrollment data, such as subscriber and dependents, employer information, and primary care health care provider information. The sponsor is the backer of the coverage, benefit, or product. A sponsor can be an employer, union, government agency, association, or insurance company. The health plan refers to an entity that pays claims, administers the insurance product or benefit, or both.

f. Eligibility for a health plan.

This transaction may be used to inquire about the eligibility, coverage, or benefits associated with a benefit plan, employer, plan sponsor, subscriber, or a dependent under the subscriber's policy. It also can be used to communicate information about or changes to eligibility, coverage, or benefits from information sources (such as insurers, sponsors, and health plans) to information receivers (such as physicians, hospitals, third party administrators, and government agencies).

g. Health plan premium payments.

This transaction may be used by, for example, employers, employees, unions, and associations to make and keep track of payments of health plan premiums to their health insurers. This transaction may also be used by a health care provider, acting as liaison for the beneficiary, to make payment to a health insurer for coinsurance, copayments, and deductibles.

h. Referral certification and authorization.

This transaction may be used to transmit health care service referral information between primary care health care providers, health care providers furnishing services, and health plans. It can also be used to obtain authorization for certain health care services from a health plan.

i. First report of injury.

This transaction may be used to report information pertaining to an injury, illness, or incident to entities interested in the information for statistical, legal, claims, and risk management processing requirements.

j. Health claims attachments.

This transaction may be used to transmit health care service information, such as subscriber, patient, demographic, diagnosis, or treatment data for the purpose of a request for review, certification, notification, or reporting the outcome of a health care services review.

k. Other transactions as the Secretary may prescribe by regulation.

Under section 1173(a)(1)(B) of the Act, the Secretary shall adopt standards, and data elements for those standards, for other financial and administrative transactions deemed appropriate by the Secretary. These transactions would be consistent with the goals of improving the operation of the health care system and reducing administrative costs.

C. Effective Dates—General

In general, any given standard would be effective 24 months after the effective date (36 months for small health plans) of the final rule for that standard. Because there are other standards to be established than those in this proposed rule, we specify the date for a given standard under the subpart for that standard.

If HHS adopts a modification to an implementation specification or a standard, the implementation date of the modification would be no earlier than the 180th day following the adoption of the modification. HHS would determine the actual date, taking into account the time needed to comply due to the nature and extent of the modification. HHS would be able to extend the time for compliance for small health plans. This provision would be at § 142.106.

The law does not address scheduling of implementation of the standards; it gives only a date by which all concerned must comply. As a result, any of the health plans, health care clearinghouses, and health care providers may implement a given standard earlier than the date specified in the subpart created for that standard. We realize that this may create some problems temporarily, as early implementers would have to be able to continue using old standards until the new ones must, by law, be in place.

At the WEDI Healthcare Leadership Summit held on August 15, 1997, it was recommended that health care providers not be required to use any of the standards during the first year after the adoption of the standard. However, willing trading partners could implement any or all of the standards by mutual agreement at any time during the 2-year implementation phase (3-year implementation phase for small health plans). In addition, it was recommended that a health plan give its health care providers at least 6 months notice before requiring them to use a given standard.

We welcome comments specifically on early implementation as to the extent to which it would cause problems and how any problems might be alleviated.

D. NPI Standard

[Please label written and e-mailed comments about this section with the subject: NPI STANDARD.]

Section 142.402, Provider identifier standard, would contain the national health care provider identifier standard. There is no recognized standard for health care provider identification as defined in the law. (That is, there is no standard that has been developed, adopted, or modified by a standard setting organization after consultation with the NUBC, NUCC, WEDI, and the ADA.) Therefore, we would designate a new standard.

We are proposing as the standard the national provider identifier (NPI), which would be maintained by HCFA. As discussed under the Background section earlier in this preamble, the NPI is an 8-position alphanumeric identifier. It includes as the 8th position a numeric check digit to assist in identifying erroneous or invalid NPIs. The check digit is a recognized International Standards Organization [ISO] standard. The check digit algorithm must be computed from an all-numeric base

number. Therefore, any alpha characters that may be part of the NPI are translated to specific numerics before the calculation of the check digit. The NPI format would allow for the creation of approximately 20 billion unique identifiers.

The 8-position alphanumeric format was chosen over a longer numeric-only format in order to keep the identifier as short as possible while providing for an identifier pool that would serve the industry's needs for a long time. However, we recognize that some health care providers and health plans might have difficulty in the short term in accommodating alphabetic characters. Therefore, we propose to issue numeric-only identifiers first and to introduce alphabetic characters starting with the first position of the NPI. This would afford additional time for health care providers and health plans to accommodate the alphabetic characters.

1. Selection criteria.

Each individual implementation team weighted the criteria described in section I.D., Process for Developing National Standards, in terms of the standard it was addressing. As we assessed the various options for a provider identifier against the criteria, it became apparent that many of the criteria would be satisfied by all of the provider identifier candidates. Consequently, we concentrated on the four criteria (1, 2, 3, and 10) that were not satisfied by all of the options. These criteria are described below in the specific context of the provider identifier.

#1. Improve the efficiency and effectiveness of the health care system.

In order to be integrated into electronic transactions efficiently, standard provider identifiers must be easily accessible. Health plans must be able to obtain identifiers and other key data easily in order to use the identifier in electronic transactions. Existing health care provider files have to be converted to the new standard. In addition, health care providers will need to know other health care providers' identifiers (for example, a hospital needs the identifiers of all physicians who perform services in the facility). To meet this criterion, we believe the identifier should not be proprietary; that is, it should be possible to communicate identifiers freely as needed. Moreover, the issuer must be able to reliably issue each health care provider only one identifier and to issue each identifier only once.

#2. Meet the needs of the health data standards user community.

The identifier must be comprehensive. It must accommodate all health care provider types or must be capable of being expanded to do so. Based on our definition of ''health care provider'', this includes individual health care providers who are employed by other health care providers and alternative practitioners who may not be currently recognized by health plans. The identifier must have the capacity to enumerate health care providers for many years without reuse of previously-assigned identifiers. To meet this criterion, we believe that, over time, the identifier must be capable of uniquely identifying at least 100 million entities.

#3. Be consistent and uniform with other HIPAA and other private and public sector health data standards in providing for privacy and confidentiality.

Confidentiality of certain health care provider data must be maintained. Certain data elements (for example, social security number and date of birth) needed to enumerate an individual health care provider reliably should not be made available to the public.

#10. Incorporate flexibility to adapt more easily to changes.

To meet this criterion, the identifier must be intelligence-free (the identifier itself should not contain any information about the health care provider). Intelligence in the identifier would require issuing a new identifier if there is a change in that information. For example, an identifier containing a State code would no longer be accurate if the health care provider moves to another State.

2. Candidate identifiers.

We assessed a number of candidate identifiers to see if they met the four specific criteria discussed above. We first assessed the identifiers listed in the inventory of standards prepared for the Secretary by the Health Informatics Standards Board. Those standards are the unique physician identification number (UPIN), which is issued by HCFA; the health industry number (HIN), which is issued by the Health Industry Business Communications Council; the National Association of Boards of Pharmacy (NABP) number, which is issued by the National Council for Prescription Drug Programs in cooperation with the NABP; and the national provider identifier (NPI), which is being developed by HCFA.

Unique physician identification numbers are currently issued to physicians, limited license practitioners, group practices, and certain noninstitutional providers (for example, ambulance companies). These numbers are issued to health care providers through Medicare carriers, and generally only Medicare providers have them. The unique physician identification number is used to identify ordering, performing, referring, and attending health care providers in Medicare claims processing. The computer system that generates the numbers is maintained by HCFA and is able to detect duplicate health care providers. The unique physician identification number is in the public domain and could be made widely accessible to health care providers and health plans. These numbers do contain intelligence (the first position designates a provider type, e.g., physician) and are only six positions long, which would not be able to accommodate a sufficient number of future health care providers. The unique physician identification number does not meet criteria 2 and 10.

The health industry number is used for contract administration in the health industry supply chain, as a prescriber identifier for claims processing, and for market analysis. It consists of a base 7-position alpha-numeric identifier and a 2-position alpha-numeric suffix identifying the location of the prescriber. The suffix contains intelligence. Health industry numbers can enumerate individual prescribers as well as institutional providers. They are issued via a proprietary system maintained by the Health Industry Business Communications Council, which permits subscriptions to the database by data re-sellers and others. In addition, it does not collect sufficient data for thorough duplicate checking of individuals. The health industry number does not meet criteria 1, 3, and 10.

The National Association of Boards of Pharmacy number is a 7-digit numeric identifier assigned to licensed pharmacies. It is used to identify pharmacies to various payers. Its first two digits denote the State, the next four positions are assigned sequentially, and the last position is a check digit. We cannot assess data accessibility or privacy and confidentiality at this time because of the very limited applicability of the number. A 7-digit numeric identifier would not yield a sufficient quantity of identifiers, and there is intelligence in the number. This number does not meet criteria 2 and 10.

The NPI is intended to be a universal identifier, which can be used to enumerate all types of health care providers, and the supporting data structure incorporates a comprehensive list of provider types developed by an ANSI Accredited Standards Committee X12N workgroup. It is an intelligence-free 8-position alpha-numeric identifier, with the eighth position being a check digit, allowing for approximately 20

billion possible identifiers. The NPI would not be proprietary and would be widely available to the industry. The system that would enumerate health care providers would be maintained by HCFA, and data would therefore be safeguarded under the Privacy Act (5 U.S.C 552a). The system would also incorporate extensive search and duplicate checking routines into the enumeration process. The NPI meets all four of these criteria.

In addition, we examined the social security number issued by the Social Security Administration, the DEA number issued by the Drug Enforcement Administration, the employer identification number issued by the Internal Revenue Service, and the national supplier clearinghouse number issued by the Medicare program and used to identify suppliers of durable medical equipment and other suppliers. Neither the social security number nor the DEA number meets the accessibility test. The use of the social security number by Federal agencies is protected by the Privacy Act, and the DEA number must remain confidential in order to fulfill its intended function of monitoring controlled substances. The employer identification number does not meet the comprehensiveness test, because some individual health care providers do not qualify for one. The length of the national supplier clearinghouse number is 10 positions; to expand it would make it too long. Also, it is not intelligence-free, since the first portion of the identifier links health care providers together into business entities. The last four positions are reserved for subentities, leaving only the first six positions to enumerate unique health care provider entities.

Based on this analysis, we recommend the NPI be designated as the standard identifier for health care providers. It is the only candidate identifier that meets all four of the criteria above. In addition, the NPI would be supported by HCFA to assure continuity. As discussed in section VII. of this preamble, on collection of information requirements, the data collection and paperwork burdens on users would be minimal, and the NPI can be used in other standard transactions under the HIPAA. In addition, as discussed in sections III.B., Enumerators, and IX., Impact Analysis, implementation costs per health care provider and per health plan would be relatively low, and we would develop implementation procedures. The NPI would be platform and protocol independent, and the structure of the identifier has been precisely stated. The NPI is not fully operational, but it is undergoing testing at this time, and comprehensive testing will be completed before the identifier is implemented.

3. Consultations.

In the development of the NPI, we consulted with many organizations, including those that the legislation requires (section 1172(c)(3)(B) of the Act). Subsequently, the NPI has been endorsed by several government and private organizations:

a. The NCVHS endorsed the NPI in a **Federal Register** notice on July 24, 1997 (62 FR 39844).

b. The NUBC endorsed the NPI in August 1996.

c. The ADA indicated its support, in concept, of the development of a unique, singular, national provider identifier for all health care providers in December 1996.

d. The NUCC supported the establishment of the NPI in January 1997, subject to the following issues being fully addressed:

- The business needs and rationale for each identifier be clearly established for health care, in both the private and government sectors, as part of the identifier definition process.
- The scope and nature of, and the rationale for, the entities subject to enumeration be clearly defined.
- All issues arising out of the health care industry's review of the proposed identifier, including any ambiguities in the law or proposed rule, be acknowledged and addressed.
- Distribution of identifier products/maintenance to health care providers, payers and employers be low cost and efficient. There should be no cost to have a number assigned to an individual health care provider or business.

e. WEDI indicated support for ''the general concept of the NPI as satisfying the national provider identifier requirement of HIPAA'' in a May 1997 letter to the Secretary. WEDI further stated that the NPI is equal to or better than alternative identifiers, but noted that it cannot provide an unqualified opinion until operational and technical details are disclosed in this regulation.

f. The State of Minnesota endorsed the NPI in Minnesota Statutes Section 62J.54, dated February 1996.

g. The Massachusetts Health Data Consortium's Affiliated Health Information Networks of New England endorsed the NPI as the standard provider locator for electronic data interchange in March 1996.

h. The USA Registration Committee approved the NPI as an International Standards Organization card issuer identifier in August 1996, for use on magnetic cards.

i. The National Council for Prescription Drug Programs indicated support for the NPI effort in an October 1996 letter to the Secretary.

E. Requirements

[Please label written and e-mailed comments about this section with the subject: Requirements.]

1. Health plans.

In § 142.404, Requirements: Health plans, we would require health plans to accept and transmit, directly or via a health care clearinghouse, the NPI on all standard transactions wherever required. Federal agencies and States may place additional requirements on their health plans.

2. Health care clearinghouses.

We would require in § 142.406, Requirements: Health care clearinghouses, that each health care clearinghouse use the NPI wherever an electronic transaction requires it.

3. Health care providers.

In § 142.408, Requirements: Health care providers, we would require each health care provider that needs an NPI for HIPAA transactions to obtain, by application if necessary, an NPI and to use the NPI wherever required on all standard transactions that it directly transmits or accepts. The process by which health care providers will apply for and obtain NPIs has not yet been established. This proposed rule (in section III., Implementation of the NPI) presents implementation options by which health care providers will apply for and obtain NPIs. We are seeking comments on the options, and welcome other options for consideration. In one of the options we are presenting, we anticipate that the initial enumeration of health care providers that are already enrolled in Medicare, other Federal programs named as health plans, and Medicaid would be done by those health plans. Those health care providers would not have to apply for NPIs but would instead have their NPIs issued automatically. Non-Federal and non-Medicaid providers would need to apply for NPIs to a Federally-directed registry for initial enumeration. The information that will be needed in order to issue an NPI to a health care provider is discussed in this preamble in section IV. Data. Depending on the implementation option selected, Federal and Medicaid health care providers may not need to provide this information because it would already be available to the entities that would be enumerating them. In one of the options, health care providers would be assigned their NPIs in the course of enrolling in the Federal health plan or in Medicaid. Both options may require, to some degree, the

development of an application to be used in applying for an NPI.

We would require each health care provider that has an NPI to forward updates to the data in the database to an NPI enumerator within 60 days of the date the change occurs. We are soliciting comments on whether these updates should be applicable to all the data elements proposed to be included in the national provider file (NPF) or only to those data elements that are critical for enumeration. For example, we would like to know whether the addition of a credential should be required to be reported within the 60-day period, or whether such updates should be limited to name or address changes or other data elements that are required to enumerate a health care provider.

F. Effective Dates of the NPI

Health plans would be required to comply with our requirements as follows:

1. Each health plan that is not a small health plan would have to comply with the requirements of §§ 142.104 and 142.404 no later than 24 months after the effective date of the final rule.

2. Each small health plan would have to comply with the requirements of §§ 142.104 and 142.404 no later than 36 months after the effective date of the final rule.

3. If HHS adopts a modification to a standard or implementation specification, the implementation date of the modification would be no earlier than the 180th day following the adoption of the modification. HHS would determine the actual date, taking into account the time needed to comply due to the nature and extent of the modification. HHS would be able to extend the time for compliance for small health plans.

Health care clearinghouses and affected health care providers would have to begin using the NPI no later than 24 months after the effective date of the final rule.

Failure to comply with standards may result in monetary penalties. The Secretary is required by statute to impose penalties of not more than $100 per violation on any person who fails to comply with a standard, except that the total amount imposed on any one person in each calendar year may not exceed $25,000 for violations of one requirement. We will propose enforcement procedures in a future **Federal Register** document once the industry has more experience with using the standards.

III. Implementation of the NPI

[Please label written and e-mailed comments about this section with the subject: Implementation.]

A. The National Provider System

We would implement the NPI through a central electronic enumerating system, the national provider system (NPS). This system would be a comprehensive, uniform system for identifying and uniquely enumerating health care providers at the national level, not unlike the process now used to issue social security numbers. HCFA would exercise overall responsibility for oversight and management of the system. Health care providers would not interact directly with the NPS.

The process of identifying and uniquely enumerating health care providers is separate from the process health plans follow in enrolling health care providers in their health programs. Even with the advent of assignment of NPIs by the NPS, health plans would still have to follow their own procedures for receiving and verifying information from health care providers that apply to them for enrollment in their health programs. Unique enumeration is less expensive than plan enrollment because it does not require as much information to be collected, edited, and verified. We welcome comments on the cost of provider enrollment in a health plan.

NPIs would be issued by one or more organizations to which we refer in this preamble as ''enumerators.'' The functions we foresee being carried out by enumerators are presented in section *B. Enumerators* in this preamble. The NPS would edit the data, checking for consistency, formatting addresses, and validating the social security number. It would then search the database to determine whether the health care provider already has an NPI. If so, that NPI would be displayed. If not, an NPI would be assigned. If the health care provider is similar (but not identical) to an already-enumerated health care provider, the information would be passed back to the enumerator for further analysis. Enumerators would also communicate NPIs back to the health care providers and maintain the NPS database. The number of enumerators would be limited in the interest of data quality and consistency.

Because the Medicare program maintains files on more health care providers than any other health care program in the country, we envision using data from those files to initially populate the NPF that is being built by the NPS and would be accessed by the enumerator(s). The data we are considering for inclusion in this file are described in section IV. Data in this preamble.

B. Enumerators

The enumerator(s) would carry out the following functions: assist health care providers and answer questions; accept the application for an NPI; validate as many of the data elements as possible at the point of application to assure the submitted data are accurate and the application is authentic; enter the data into the NPS to obtain an NPI for the health care provider; research cases where there is a possible match to a health care provider already enumerated; notify the health care provider of the assigned NPI; and enter updated data into the NPS when notified by the health care provider. Some of these functions would not be necessary if the enumerator(s) is an entity that enrolls health care providers in its own health plan and would be enumerating health care providers at the time they are enrolling in the entity's health plan. For example, if a Federal health plan is an enumerator, some of the functions listed above would not have to be performed separately from what the health plan would do in its regular business.

The major issue related to the operation of this process is determining who the enumerator(s) will be.

1. Possible enumerators.

We had several choices in deciding who should enumerate health care providers. There are advantages and disadvantages to each of these choices:

- A registry:

A central registry operated under Federal direction would enumerate all health care providers. The Federally-directed registry could be a single physical entity or could be a number of agents controlled by a single entity and operating under common procedures and oversight.

For: The process would be consistent; centralized operation would assure consistent data quality; the concept of a registry is easy to understand (single source for identifiers).

Against: The cost of creating a new entity rather than enumerating as part of existing functions (for example, plan enrollment) would be greater than having existing entities enumerate; there would be redundant data required for enumeration and enrollment in a health plan.

- Private organization(s):

A private organization(s) that meets certain selection criteria and performance standards, which would post a surety bond related to the number

of health care providers enumerated could enumerate health care providers.

For: The organization(s) would operate in a consistent manner under uniform requirements and standards; failure to maintain prescribed requirements and standards could result in penalties which could include suspension or debarment from being an enumerator.

Against: A large number of private enumerators would compromise the quality of work and be difficult to manage; the administrative work required to set up arrangements for a private enumerator(s) may be significant; the cost of creating a new entity rather than enumerating as part of existing functions (for example, plan enrollment) would be greater than having existing entities enumerate; there might be redundant data required for enumeration and enrollment in a health plan; the legality of privatization would need to be researched.

• Federal health plans and Medicaid State agencies:

Federal programs named as health plans and Medicaid State agencies would enumerate all health care providers. (As stated earlier under the definition of ''health plan'', the Federal Employees Health Benefits Program is comprised of numerous health plans, rather than just one, and does not deal directly with health care providers that are not also health plans. Thus, the program would not enumerate health care providers but would still require the NPI to be used.)

For: These health plans already assign numbers to their health care providers; a large percentage of health care providers do business with Federal health plans and Medicaid State agencies; there would be no appreciable costs for these health plans to enumerate as part of their enrollment process; a small number of enumerators would assure consistent data quality.

Against: Not all health care providers do business with any of these health plans; there would be the question of which health plan would enumerate the health care provider that participates in more than one; we estimate that approximately 5 percent of the State Medicaid agencies may decline to take on this additional task.

• Designated State agency:

The Governor of each State would designate an agency to be responsible for enumerating health care providers within the State. The agency might be the State Medicaid agency, State licensing board, health department, or some other organization. Each State would have the flexibility to develop its most workable approach.

For: This choice would cover all health care providers; there would be a single source of enumeration in each State; States could devise the least expensive mechanisms (for example, assign NPI during licensing); license renewal cycles would assure periodic checks on data accuracy.

Against: This choice would place an unfunded workload on States; States may decline to designate an agency; there may be insufficient funding to support the costs the States would incur; State licensing agencies may not collect enough information during licensing to ensure uniqueness across States; States may not be uniform in their definitions of ''providers.''

• Professional organizations or training programs:

We would enlist professional organizations to enumerate their members and/or enable professional schools to enumerate their students.

For: Individuals could be enumerated at the beginning of their careers; most health care providers either attend a professional school or belong to an organization.

Against: Not all health care providers are affiliated with an organization or school; this choice would result in many enumerators and thus potentially lower the data quality; schools would not be in a position to update data once the health care provider has graduated; the choice would place an unfunded workload on schools and/or organizations.

• Health plans:

Health plans in general would have access to the NPS to enumerate any of their health care providers.

For: Most health care providers do business with one or more health plans; there would be a relatively low cost for health plans to enumerate as part of enrollment; this choice would eliminate the need for redundant data.

Against: Not all health care providers are affiliated with a health plan; this choice would be confusing for the health care provider in determining which health plan would enumerate when the health care provider is enrolled in multiple health plans; there would be a very large number of enumerators and thus potentially serious data quality problems; the choice would place unfunded workload on health plans.

• Combinations:

We also considered using combinations of these choices to maximize advantages and minimize disadvantages.

2. Options:

If private organizations, as enumerators, could charge health care providers a fee for obtaining NPIs, this enumeration option would be attractive and more preferable than the other choices or combinations, as it would offer a way to fund the enumeration function. In researching the legality of this approach, however, we were advised that we do not have the authority to (1) charge health care providers a fee for obtaining NPIs, or (2) license private organizations that could charge health care providers for NPIs. For these reasons, we chose not to recommend private organizations as enumerators.

The two most viable options are described below. We solicit input on these options, as well as on alternate solutions.

Option 1: Registry enumeration of all health care providers.

All health care providers would apply directly to a Federally-directed registry for an identifier. The registry, while under Federal direction, would probably be operated by an agent or contractor. This option is favored by some health plans, which believe that a single entity should be given the task of enumerating health care providers and maintaining the database for the sake of consistency. It would also be the simplest option for health care providers, since enumeration activities would be carried out for all health care providers by a single entity. The major drawback to this option is the high cost of establishing a registry large enough to process enumeration and update requests for the 1.2 million current and 30,000 new (annually) health care providers that conduct HIPAA transactions. The costs of this option are discussed in section J.2.d., Enumerators, in the impact analysis in this **Federal Register** document. The statute did not provide a funding mechanism for the enumeration/update process. Federal funds, if available, could support the registry. We seek comments on funding mechanisms for the registry.

This option does not offer a clear possibility for funding some of the costs associated with the operation and maintenance of the NPS as it becomes national in scope (that is, as the NPS enumerates health care providers that are not Medicare providers). We solicit comments on appropriate methods for funding the NPS under this option.

Option 2: A combination of Federal programs named as health plans, Medicaid State agencies, and a Federally-directed registry.

Federal health plans and Medicaid State agencies would enumerate their own health care providers. Each health care provider participating in more than one health plan could choose the health

plan by which it wishes to be enumerated. All other health care providers would be enumerated by a Federally-directed registry. These latter health care providers would apply directly to the registry for an identifier.

The number of enumerators, and the number of health care providers per enumerator, would be small enough that each enumerator would be able to carefully validate data received from and about each of its health care providers. Moreover, enumerators (aside from the registry) would be dealing with their own health care providers, an advantage both in terms of cost equity and data quality. This option recognizes the fact that Federal plans and Medicaid State agencies already assign identifiers to their health care providers for their own programmatic purposes. It would standardize those existing processes and, in some cases, may increase the amount of data collected or validation performed. We have concluded that the cost of concurrently enumerating and enrolling a Medicare or Medicaid provider is essentially the same as the cost of enrollment alone because of the high degree of redundancy between the processes. While there would probably be additional costs initially, they would be offset by savings in other areas (e.g., there would be a simplified, more efficient coordination of benefits; a health care provider would only have to be enumerated once; there would be no need to maintain more than one provider number for each health care provider; and there would be no need to maintain more than one enumeration system).

The Federal Government is responsible for 75 percent of Medicaid State agency costs to enumerate and update health care providers. Because we believe that, on average, the costs incurred by Medicaid State agencies in enumerating and updating their own health care providers to be relatively low and offset by savings, there are no tangible costs involved.

Allowing these health plans to continue to enumerate their health care providers would reduce the registry workload and its operating costs. We estimate that approximately 85 percent of billing health care providers transact business with a Medicaid State agency or a Federal health plan. We estimate that 5 percent of Medicaid State agencies may decline to enumerate their health care providers. If so, that work would have to be absorbed by the registry. This expense could be offset by the discontinuation of the UPIN registry, which is currently maintained with Federal funds. The costs of this option are discussed in section J.2.d., Enumerators, of the impact analysis.

We welcome comments on the number of health care providers that would deal directly with a registry under this option and on alternative ways to enumerate them.

This option does not offer a clear possibility for funding some of the costs associated with the operation and maintenance of the NPS as it becomes national in scope (that is, as the NPS enumerates health care providers that are not Medicare providers). We solicit comments on appropriate methods for funding the NPS under this option.

We believe that option 2 is the most advantageous and the least costly. Option 1 is the simplest for health care providers to understand but has a significant Federal budgetary impact. Option 2 takes advantage of existing expertise and processes to enumerate the majority of health care providers. This reduces the cost of the registry in option 2 to a point where it would be largely offset by savings from eliminating redundant enumeration processes.

3. Fees and costs.

Because the statute did not provide a funding mechanism for the enumeration process, Federal funds, if available, would be required to finance this function. We seek comment on any burden that various financing options might impose on the industry.

We welcome comments on possible ways to reduce the costs of enumeration.

While the NPS has been developed to date by HCFA with Federal funds, issues remain as to sources of future funding as the NPS becomes national in use. We welcome your comments on sources for this funding.

4. Enumeration phases.

We intend to implement the NPI in phases because the number of potential health care providers to be enumerated is too large to enumerate at one time, regardless of the number of enumerators. We describe in a., b., and c. below how the process would work if option 2 were selected and in d. below how implementation of option 1 would differ.

a. Health care providers that participate in Medicare (including physicians and other suppliers that furnish items and services covered by Medicare) would be enumerated first because, as the managing entity, HCFA has data readily available for all Medicare providers. Health care providers that are already enrolled in Medicare at the time of implementation would be enumerated based on existing Medicare provider databases that have already been reviewed and validated. These health care providers would not have to request an NPI—they would automatically receive one. After this initial enumeration, new and non-Medicare health care providers not yet enumerated that wish to participate in Medicare would receive an NPI as a part of the enrollment process.

b. Medicaid and non-Medicare Federal health plans that need to enumerate their health care providers would follow a similar process, based on a mutually agreed-upon timetable. Those health plans' existing prevalidated databases could be used to avoid requiring large numbers of health care providers to apply for NPIs. If a health care provider were already enumerated by Medicare, that NPI would be communicated to the second program. After the initial enumeration, new health care providers that wish to participate in Medicaid or a Federal health plan other than Medicare would receive an NPI as a part of that enrollment process. Health care providers that transact business with more than one such health plan could be enumerated by any one of those health plans. This phase would be completed within 2 years after the effective date of the final rule.

c. A health care provider that does not transact any business with Federal health plans or Medicaid but that does conduct electronically any of the transactions stipulated in HIPAA (for example, submits claims electronically to a private health plan) would be enumerated via a Federally-directed registry. This enumeration would be done concurrently with the enumeration described in b., above. Health care providers would apply to the registry for an NPI.

After the first two phases of enumeration (that is, enumeration of health care providers enrolled or enrolling in Federal health plans or Medicaid or health care providers that do not conduct business with any of those plans but that conduct any of the HIPAA transactions electronically), the health care providers remaining would be those that do not conduct electronically any of the transactions specified in HIPAA. We refer to these health care providers as ''non-HIPAA-transaction health care providers.'' The non-HIPAA-transaction health care providers would not be enumerated in the first two phases of enumeration. We do not intend to enumerate these health care providers until all health care providers requiring NPIs by statute are enumerated and funds are available. In some cases, these health care providers may wish to be enumerated even though

they do not conduct electronic transactions. Health plans may prefer to use the NPI for all health care providers, whether or not they submit transactions electronically, for the sake of processing efficiency. In addition, some health care providers may wish to be enumerated even though they conduct no designated transactions and are not affiliated with any health plan. Additional research is required on the time table and method by which non-HIPAA-transaction health care providers would be enumerated.

d. If option 1 were selected, the Federally-directed registry would enumerate all health care providers. With a single enumeration point (although it could consist of several agents controlled by a single entity, as stated earlier), we would envision enumeration taking place in the following phases: Medicare providers; Medicaid providers and other non-Medicare Federal providers; health care providers that do not transact any business with the aforementioned plans but that process electronically any of the transactions stipulated in HIPAA; and all other health care providers (i.e., non-HIPAA-transaction health care providers).

C. Approved Uses of the NPI

The law requires that we specify the appropriate uses of the NPI.

Two years after adoption of this standard (3 years for small health plans) the NPI must be used in the health care system in connection with the health-related financial and administrative transactions identified in section 1173(a). The NPI may also be used as a cross reference in health care provider fraud and abuse files and other program integrity files (for example, the HHS Office of the Inspector General sanction file). The NPI may be used to identify health care providers for debt collection under the provisions of the Debt Collection Information Act of 1996 and the Balanced Budget Act of 1997, and for any other lawful activity requiring individual identification of health care providers. It may not be used in any activity otherwise prohibited by law.

Other examples of approved uses would include:

- Health care providers may use their own NPIs to identify themselves in health care transactions or related correspondence.
- Health care providers may use other health care providers' NPIs as necessary to complete health care transactions and on related correspondence.
- Health care providers may use their own NPIs on prescriptions (however, the NPI could not replace the DEA number or State license number where either of those numbers is required on prescriptions).
- Health plans may use NPIs in their internal provider files to process transactions and may use them on transactions and in communications with health care providers.
- Health plans may communicate NPIs to other health plans for coordination of benefits.
- Health care clearinghouses may use NPIs in their internal files to create and process standard transactions and in communications with health care providers and health plans.
- NPIs may be used to identify treating health care providers in patient medical records.

D. Summary of Effects on Various Entities

We summarize here how the implementation of the NPI would affect health care providers, health plans, and health care clearinghouses, if option 2 were selected. Differences that would result from selection of option 1 are noted parenthetically.

1. Health care providers.

a. Health care providers interacting with Medicare, another Federal plan, or a Medicaid State agency would receive their NPIs from the NPS via one of those programs and would be required to use their NPIs on all the specified electronic transactions. Each plan would establish its own schedule for adopting the NPI, within the time period specified by the law. Whether a given plan would automatically issue the NPIs or require the health care providers to apply for them would be up to the plan. (For example, the Medicare program would issue NPIs automatically to its currently enrolled Medicare providers and suppliers; data on its future health care providers and suppliers would be collected on the Medicare enrollment application.) The Federal or State plan may impose requirements other than those stated in the regulations.

The health care providers would be required to update any data collected from them by submitting changes to the plan within 60 days of the change. Health care providers that transact business with multiple plans could report changes to any one of them. (Selection of option 1 would mean that the health care provider would obtain the NPI from, and report changes to, the Federally-directed registry.)

b. Health care providers that conduct electronic transactions but do not do so with Federal health plans or Medicaid would receive their NPIs from the NPS via the Federally-directed registry and would be required to use their NPIs on all the specified electronic transactions. Each health plan would establish its own schedule for adopting the NPI, within the time period specified by the law. The health care providers would be required to update any data originally collected from them by submitting changes within 60 days of the date of the change to the Federally-directed registry.

c. Health care providers that are not covered by the above categories would not be required to obtain an NPI. (These health care providers are the non-HIPAA-transaction health care providers as described in section 4.c. of section B. Enumerators earlier in this preamble.) They may be enumerated if they wish, depending on availability of funds, but they would not be issued NPIs until those health care providers that currently conduct electronic transactions have received their NPIs. As stated earlier, the timetable and method by which the non-HIPAA-transaction health care providers would be enumerated must be determined. After the non-HIPAA-transaction health care providers are enumerated, they would be required to update any data originally collected from them by submitting changes within 60 days of the date of the change. Those providers would report their changes to the registry or to a Federal plan or Medicaid State agency with which they transact business at the time of the change.

2. Health plans.

a. Medicare, other Federal health plans, and Medicaid would be responsible for obtaining NPIs from the NPS and issuing them to their health care providers. They would be responsible for updating the data base with data supplied by their health care providers. (Selection of option 1 would mean that Medicare, other Federal health plans, and Medicaid would not enumerate health care providers or update their data.)

These government health plans would establish their own schedule for adopting the NPI, within the time period specified by the law. They would be able to impose requirements on their health care providers in addition to, but not inconsistent with, those in our regulations.

b. Each remaining health plan would be required to use the NPI to identify health care providers in electronic transactions as provided by the statute. Each health plan would establish its own schedule for adopting the NPI, within the time period specified by the law. They would be able to impose requirements on their health care providers in addition to, but not inconsistent with, those in our regulations.

3. Health care clearinghouses.

Health care clearinghouses would be required to use a health care provider's NPI on electronic standard transactions requiring an NPI that are submitted on the health care provider's behalf.

IV. Data

[Please label written and e-mailed comments about this section with the subject: DATA.]

A. Data Elements

The NPS would collect and store in the NPF a variety of information about a health care provider, as shown in the table below. We believe the majority of this information is used to uniquely identify a health care provider; other information is used for administrative purposes. A few of the data elements are collected at the request of potential users that have been working with HCFA in designing the database prior to the passage of HIPAA. All of these data elements represent only a fraction of the information that would comprise a provider enrollment file. The data elements in the table, plus cease/effective/termination dates, switches (yes/no), indicators, and history, are being considered as those that would form the NPF. We have included comments, as appropriate. The table does not display systems maintenance or similar fields, or health care provider cease/effective/termination dates.

NATIONAL PROVIDER FILE DATA ELEMENTS

Data elements	Comments	Purpose
National Provider Identifier (NPI)	8-position alpha-numeric NPI assigned by the NPS	I
Provider's current name	For Individuals only. Includes first, middle, and last names	I
Provider's other name	For Individuals only. Includes first, middle, and last names. Other names might include maiden and professional names.	I
Provider's legal business name	For Groups and Organizations only	I
Provider's name suffix	For Individuals only. Includes Jr., Sr., II, III, IV, and V	I
Provider's credential designation	For Individuals only. Examples are MD, DDS, CSW, CNA, AA, NP, RNA, PSY	I
Provider's Social Security Number (SSN)	For Individuals only	I
Provider's Employer Identification Number (EIN).	Employer Identification Number	I
Provider's birth date	For Individuals only	I
Provider's birth State code	For Individuals only	I
Provider's birth county name	For Individuals only	I
Provider's birth country name	For Individuals only	I
Provider's sex	For Individuals only	I
Provider's race	For Individuals only	U
Provider's date of death	For Individuals only	I
Provider's mailing address	Includes 2 lines of street address, plus city, State, county, country, 5- or 9-position ZIP code.	A
Provider's mailing address telephone number.		A
Provider's mailing address fax number		A
Provider's mailing address e-mail address		A
Resident/Intern code	For certain Individuals only	U
Provider enumerate date	Date provider was enumerated (assigned an NPI). Assigned by the NPS	A
Provider update date	Last date provider data was updated. Assigned by the NPS	A
Establishing enumerator/agent number	Identification number of the establishing enumerator	A
Provider practice location identifier (location code).	2-position alpha-numeric code (location code) assigned by the NPS	I
Provider practice location name	Title (e.g., ''doing business as'' name) of practice location	I
Provider practice location address	Includes 2 lines of street address, plus city, State, county, country, 5- or 9-position ZIP code.	I
Provider's practice location telephone number.		A
Provider's practice location fax number		A
Provider's practice location e-mail address		A
Provider classification	From Accredited Standards Committee X12N taxonomy. Includes type(s), classification(s), area(s) of specialization.	I
Provider certification code	For certain Individuals only	U
Provider certification (certificate) number	For certain Individuals only	U
Provider license number	For certain Individuals only	I
Provider license State	For certain Individuals only	I
School code	For certain Individuals only	I
School name	For certain Individuals only	I
School city, State, country	For certain Individuals only	U
School graduation year	For certain Individuals only	I
Other provider number type	Type of provider identification number also/formerly used by provider: UPIN, NSC, OSCAR, DEA, Medicaid State, PIN, Payer ID.	I
Other provider number	Other provider identification number also/formerly used by provider	I
Group member name	For Groups only. Name of Individual member of group. Includes first, middle, and last names.	I
Group member name suffix	For Groups only. This is the Individual member's name suffix. Includes Jr., Sr., II, III, IV, and V.	I

NATIONAL PROVIDER FILE DATA ELEMENTS—Continued

Data elements	Comments	Purpose
Organization type control code	For certain Organizations only. Includes Government—Federal (Military), Government—Federal (Veterans), Government—Federal (Other), Government—State/County, Government—Local, Government—Combined Control, Non-Government—Non-profit, Non-Government—For Profit, and Non-Government—Not for Profit.	U

Key:
I—Used for the unique identification of a provider.
A—Used for administrative purposes.
U—Included at the request of potential users (optional).

We need to consider the benefits of retaining all of the data elements shown in the table versus lowering the cost of maintaining the database by keeping only the minimum number of data elements needed for unique provider identification. We solicit input on the composition of the minimum set of data elements needed to uniquely identify each type of provider. In order to consider the inclusion or exclusion of data elements, we need to assess their purpose and use.

The data elements with a purpose of ''I'' are needed to identify a health care provider, either in the search process (which is electronic) or in the investigation of health care providers designated as possible matches by the search process. These data elements are critical because unique identification is the keystone of the NPS.

The data elements with a purpose of ''A'' are not essential to the identification processes mentioned above, but nonetheless are valuable. Certain ''A'' data elements can be used to contact a health care provider for clarification of information or resolution of issues encountered in the enumeration process and for sending written communications; other ''A'' data elements (e.g., Provider Enumerate Date, Provider Update Date, Establishing Enumerator/Agent Number) are used to organize and manage the data.

Data elements with a purpose of ''U'' are collected at the request of potential users of the information in the system. While not used by the system's search process to uniquely identify a health care provider, Race is nevertheless valuable in the investigation of health care providers designated as possible matches as a result of that process. In addition, Race is important to the utility of the NPS as a statistical sampling frame. We solicit comments on the statistical validity of Race data. Race is collected ''as reported''; that is, it is not validated. It is not maintained, only stored. The cost of keeping this data element is virtually nil. Other data elements (Resident/Intern Code, Provider Certification Code and Number, and Organization Type Control Code) with a purpose of ''U'', while not used for enumeration of a health care provider, have been requested to be included by some members of the health care industry for reports and statistics. These data elements are optional and do not require validation; many remain constant by their nature; and the cost to store them is negligible.

The data elements that we judge will be expensive to either validate or maintain (or both) are the license information, provider practice location addresses, and membership in groups. We solicit comments on whether these data elements are necessary for the unique enumeration of health care providers and whether validation or maintenance is required for that purpose.

Licenses may be critical in determining uniqueness of a health care provider (particularly in resolving identities involving compound surnames) and are, therefore, considered to be essential by some. License information is expensive to validate initially, but not expensive to maintain because it does not change frequently.

The practice location addresses can be used to aid in investigating possible provider matches, in converting existing provider numbers to NPIs, and in research involving fraud or epidemiology. Location codes, which are discussed in detail in section *B. Practice Addresses and Group/Organization Options* below, could be assigned by the NPS to point to and identify practice locations of individuals and groups. Some potential users felt that practice addresses changed too frequently to be maintained efficiently at the national level. The average Medicare physician has two to three addresses at which he/she practices. Group providers may have many more practice locations. We estimate that 5 percent of health care providers require updates annually, and that addresses are one of the most frequently changing attributes. As a result, maintaining more than one practice address for an individual provider on a national scale could be burdensome and time consuming. Many potential users believe that practice addresses could more adequately be maintained at local, health-plan specific levels.

Some potential users felt that membership in groups was useful in identifying health care providers. Many others, however, felt that these data are highly volatile and costly to maintain. These users felt it was unlikely that membership in groups could be satisfactorily maintained at the national level.

We welcome your comments on the data elements proposed for the NPF and input as to the potential usefulness and tradeoffs for these elements such as those discussed above.

We specifically invite comments and suggestions on how the enumeration process might be improved to prevent issuance of multiple NPIs to a health care provider.

B. Practice Addresses and Group/Organization Options

We have had extensive consultations with health care providers, health plans, and members of health data standards organizations on the requirements for provider practice addresses and on the group and organization data in the NPS. (It is important to note that the NPS is designed to capture a health care provider's mailing address. The mailing address is a data element separate from the practice address, and, as such, is not the subject of the discussion below.) Following are the major questions relating to these issues:

- Should the NPS capture practice addresses of health care providers?

For: Practice addresses could aid in non-electronic matching of health care providers and in conversion of existing provider number systems to NPIs. They could be useful for research specific to practice location; for example, involving fraud or epidemiology.

Against: Practice addresses would be of limited use in the electronic identification and matching of health care providers. The large number of practice locations of some group

providers, the frequent relocation of provider offices, and the temporary situations under which a health care provider may practice at a particular location would make maintenance of practice addresses burdensome and expensive.

• Should the NPS assign a location code to each practice address in a health care provider's record? The location code would be a 2-position alphanumeric data element. It would be a data element in the NPS but would not be part of the NPI. It would point to a certain practice address in the health care provider's record and would be usable only in conjunction with that health care provider's NPI. It would not stand alone as a unique identifier for the address.

For: The location code could be used to designate a specific practice address for the health care provider, eliminating the need to perform an address match each time the address is retrieved. The location code might be usable, in conjunction with a health care provider's NPI, as a designation for service location in electronic health transactions.

Against: Location codes should not be created and assigned nationally unless required to support standard electronic health transactions; this requirement has not been demonstrated. The format of the location code would allow for a lifetime maximum of 900 location codes per health care provider; this number may not be adequate for groups with many locations. The location code would not uniquely identify an address; different health care providers practicing at the same address would have different location codes for that address, causing confusion for business offices that maintain data for large numbers of health care providers.

• Should the NPS link the NPI of a group provider to the NPIs of the individual providers who are members of the group?

For: Linkage of the group NPI to individual members' NPIs would provide a connection from the group provider, which is possibly not licensed or certified, to the individual members who are licensed, certified or otherwise authorized to provide health care services.

Against: The large number of members of some groups and the frequent moves of individuals among groups would make national maintenance of group membership burdensome and expensive. Organizations that need to know group membership prefer to maintain this information locally, so that they can ensure its accuracy for their purposes.

• Should the NPS collect the same data for organization and group providers? There would be no distinction between organization and group providers. Each health care provider would be categorized in the NPS either as an individual or as an organization. Each separate physical location or subpart of an organization that needed to be identified would receive its own NPI. The NPS would not link the NPI of an organization provider to the NPI of any other health care provider, although all organizations with the same employer identification number (EIN) or same name would be retrievable via a query on that EIN or name.

For: The categorization of health care providers as individuals or organizations would provide flexibility for enumeration of integrated provider organizations. Eliminating the separate category of group providers would eliminate an artificial distinction between groups and organizations. It would eliminate the possibility that the same entity would be enumerated as both a group and an organization. It would eliminate any need for location codes for groups. It would allow enumeration at the lowest level that needs to be identified, offering flexibility for enumerators, health plans or other users of NPS data to link organization NPIs as they require in their own systems.

Against: A single business entity could have multiple NPIs, corresponding to its physical locations or subparts.

Possible Approaches:

We present two alternatives to illustrate how answers to the questions posed above would affect enumeration and health care provider data in the NPS. Since the results would depend upon whether the health care provider is an individual, organization, or group, we refer the reader to section II.B.3., Definitions, of this preamble.

Alternative 1:

The NPS would capture practice addresses. It would assign a location code for each practice address of an individual or group provider. Organization and group providers would be distinguished and would have different associated data in the NPS. Organization providers could have only one location per NPI and could not have individuals listed as members. Group providers could have multiple locations with location codes per NPI and would have individuals listed as members.

For individual providers, the NPS would capture each practice address and assign a corresponding location code. The NPS would link the NPIs of individuals who are listed as members of a group with the NPI of their group.

For organization providers, the NPS would capture the single active practice address. It would not assign a corresponding location code.

For group providers, the NPS would capture each practice address and assign a corresponding location code. The NPS would link the NPI of a group with the NPIs of all individuals who are listed as members of the group. A group location would have a different location code in the members' individual records and the group record.

Alternative 2:

The NPS would capture only one practice address for an individual or organization provider. It would not assign location codes. The NPS would not link the NPI of a group provider to the NPIs of individuals who are members of the group. Organization and group providers would not be distinguished from each other in the NPS. Each health care provider would be categorized as either an individual or an organization.

For individual providers, the NPS would capture a single practice address. It would not assign a corresponding location code.

For organization providers, each separate physical location or subpart that needed to be identified would receive its own NPI. The NPS would capture the single active practice address of the organization. It would not assign a corresponding location code.

Recent consultations with health care providers, health plans, and members of health data standards organizations have indicated a growing consensus for Alternative 2 discussed above. Representatives of these organizations feel that Alternative 2 will provide the data needed to identify the health care provider at the national level, while reducing burdensome data maintenance associated with provider practice location addresses and group membership. We welcome comments on these and other alternatives for collection of practice location addresses and assignment of location codes, and on the group and organization provider data within the NPS.

V. Data Dissemination

[Please label written and e-mailed comments about this section with the subject: Dissemination.]

We are making information from the NPS available so that the administrative simplification provisions of the law can be implemented smoothly and efficiently. In addition to the health care provider's name and NPI, it is important to make available other information

about the health care provider so that people with existing health care provider files can associate their health care providers with the appropriate NPIs. The data elements we are proposing to disseminate are the ones that our research has shown will be most beneficial in this matching process. The information needs to be disseminated to the widest possible audience because the NPIs would be used in a vast number of applications throughout the health care industry.

We propose to charge fees for the dissemination of such items as data files and directories, but the fees would not exceed the costs of the dissemination.

We would establish two levels of users of the data in the NPS for purposes of disseminating information. Some of the data that would be collected in order to assign NPIs would be confidential and not be disclosed to those without a legitimate right of access to the confidential data.

Level I—Enumerators

Access to the NPS would be limited to approved enumerators for the system that would be specifically listed in 45 CFR part 142. We would publish ''routine uses'' for the data concerning individuals in a Privacy Act systems of records notice. The notice is being developed and will be available during the comment period for this proposed rule.

Enumerators would have access to all data elements for all health care providers in order to accurately resolve potential duplicate situations (that is, the health care provider may already have been enumerated). Enumerators would be required to protect the privacy of the data in accordance with the Privacy Act.

Enumerators would have access to the on-line NPS and would also receive periodic batch update files from HCFA.

Level II—The Public

The public (which includes individuals, health care providers, software vendors, health plans that are not enumerators, and health care clearinghouses) would have access to selected data elements.

The table below lists the data comprising the NPF, as described in section IV. A. Data Elements, and indicates the dissemination level (Level I or Level II).

DISSEMINATION OF INFORMATION FROM THE NATIONAL PROVIDER FILE

Data elements	Dissemination level	Comments
National Provider Identifier (NPI)	I and II	8-position alpha-numeric NPI assigned by the NPS.
Provider's current name	I and II	For Individuals only. Includes first, middle, and last names.
Provider's other name	I and II	For Individuals only. Includes first, middle, and last names. Other names might include maiden and professional names.
Provider's legal business name	I and II	For Groups and Organizations only.
Provider's name suffix	I and II	For Individuals only. Includes Jr., Sr., II, III, IV, and V.
Provider's credential designation	I and II	For Individuals only. Examples are MD, DDS, CSW, CNA, AA, NP, RNA, PSY.
Provider's Social Security Number (SSN)	I only	For Individuals only.
Provider's Employer Identification Number (EIN).	I only	Employer Identification Number.
Provider's birth date	I only	For Individuals only.
Provider's birth State code	I only	For Individuals only.
Provider's birth county name	I only	For Individuals only.
Provider's birth country name	I only	For Individuals only.
Provider's sex	I only	For Individuals only.
Provider's race	I only	For Individuals only.
Provider's date of death	I only	For Individuals only.
Provider's mailing address	I and II	Includes 2 lines of street address, plus city, State, county, country, 5- or 9-position ZIP code.
Provider's mailing address telephone number.	I only.	
Provider's mailing address fax number	I only.	
Provider's mailing address e-mail address	I only.	
Resident/Intern code	I and II	For certain Individuals only.
Provider enumerate date	I and II	Date provider was enumerated (assigned an NPI). Assigned by the NPS.
Provider update date	I and II	Last date provider data was updated. Assigned by the NPS.
Establishing enumerator/agent number	I only	Identification number of the establishing enumerator.
Provider practice location identifier (location code).	I and II	2-position alpha-numeric code (location code) assigned by the NPS.
Provider practice location name	I and II	Title (e.g., ''doing business as'' name) of practice location.
Provider practice location address	I and II	Includes 2 lines of street address, plus city, State, county, country, 5- or 9-position ZIP code.
Provider's practice location telephone number.	I only.	
Provider's practice location fax number	I only.	
Provider's practice location e-mail address	I only.	
Provider classification	I and II	From Accredited Standards Committee X12N taxonomy. Includes type(s), classification(s), area(s) of specialization.
Provider certification code	I only	For certain Individuals only.
Provider certification (certificate) number	I only	For certain Individuals only.
Provider license number	I only	For certain Individuals only.
Provider license State	I only	For certain Individuals only.
School code	I only	For certain Individuals only.
School name	I only	For certain Individuals only.
School city, State, country	I only	For certain Individuals only.
School graduation year	I only	For certain Individuals only.

DISSEMINATION OF INFORMATION FROM THE NATIONAL PROVIDER FILE—Continued

Data elements	Dissemination level	Comments
Other provider number type	I and II	Type of provider identification number also/formerly used by provider: UPIN, NSC, OSCAR, DEA, Medicaid State, PIN, Payer ID.
Other provider number	I and II	Other provider identification number also/formerly used by provider.
Group member name	I and II	For Groups only. Name of Individual member of group. Includes first, middle, and last names.
Group member name suffix	I and II	For Groups only. This is the Individual member's name suffix. Includes Jr., Sr., II, III, IV, and V.
Organization type control code	I and II	For certain Organizations only. Includes Government—Federal (Military), Government—Federal (Veterans), Government—Federal (Other), Government—State/County, Government—Local, Government—Combined Control, Non-Government—Non-profit, Non-Government—For Profit, and Non-Government—Not for Profit.

Clearly, the access to the public data would have to be electronic in order to support the more frequent users. We are asking for comments on exactly what should be available in hardcopy, what types of electronic formats are necessary (for example, diskette, CD ROM, tape, cartridge, and via Internet), and frequency of update. We anticipate making these data as widely available as feasible. We note that the UPIN Directory (currently available to the public) would be discontinued and replaced with a similar document or electronic file once the NPS is in place.

We initially envisioned limiting access to the second level to health plans and other entities involved in electronic transactions and adding a third level of access, which would make a more abbreviated data set available to the general public. This was in keeping with the past policy of not disclosing physicians' practice addresses. Recent court decisions and our broader goal of beneficiary education caused us to choose a broader data dissemination strategy. We welcome comments on this point.

VI. New and Revised Standards

[Please label written and e-mailed comments about this section with the subject: Revisions.]

To encourage innovation and promote development, we intend to develop a process that would allow an organization to request a revision or replacement to any adopted standard or standards.

An organization could request a revision or replacement to an adopted standard by requesting a waiver from the Secretary of Health and Human Services to test a revised or new standard. The organization must, at a minimum, demonstrate that the revised or new standard offers an improvement over the adopted standard. If the organization presents sufficient documentation that supports testing of a revised or new standard, we want to be able to grant the organization a temporary waiver to test while remaining in compliance with the law. The waiver would be applicable to standards that could change over time; for example, transaction standards. We do not intend to establish a process that would allow an organization to avoid using any adopted standard.

We would welcome comments on the following: (1) How we should establish this process, (2) the length of time a proposed standard should be tested before we decide whether to adopt it, (3) whether we should solicit public comments before implementing a change in a standard, and (4) other issues and recommendations we should consider in developing this process.

Following is one possible process:

• Any organization that wishes to revise or replace an adopted standard must submit its waiver request to an HHS evaluation committee (not currently established or defined). The organization must do the following for each standard it wishes to revise or replace:

+ Provide a detailed explanation, no more than 10 pages in length, of how the revision or replacement would be a clear improvement over the current standard in terms of the principles listed in section I.D., *Process for developing national standards,* of this preamble.

+ Provide specifications and technical capabilities on the revised or new standard, including any additional system requirements.

+ An explanation, no more than 5 pages in length, of how the organization intends to test the standard.

• The committee's evaluation would, at a minimum, be based on the following:

+ A cost-benefit analysis.

+ An assessment of whether the proposed revision or replacement demonstrates a clear improvement to an existing standard.

+ The extent and length of time of the waiver.

• The evaluation committee would inform the organization requesting the waiver within 30 working days of the committee's decision on the waiver request. If the committee decides to grant a waiver, the notification may include the following:

+ Committee comments such as the following:

—The length of time for which the waiver applies if it differs from the waiver request.

—The sites the committee believes are appropriate for testing if they differ from the waiver request.

—Any pertinent information regarding the conditions of an approved waiver.

• Any organization that receives a waiver would be required to submit a report containing the results of the study, no later than 3 months after the study is completed.

• The committee would evaluate the report and determine whether the benefits of the proposed revision or new standard significantly outweigh the disadvantages of implementing it and make a recommendation to the Secretary.

VII. Collection of Information Requirements

Under the Paperwork Reduction Act of 1995, we are required to provide 60-day notice in the **Federal Register** and solicit public comment before a collection of information requirement is submitted to the Office of Management and Budget (OMB) for review and approval. In order to fairly evaluate whether an information collection should be approved by OMB, section 3506(c)(2)(A) of the Paperwork Reduction Act of 1995 requires that we solicit comment on the following issues:

- The need for the information collection and its usefulness in carrying out the proper functions of our agency.
- The accuracy of our estimate of the information collection burden.
- The quality, utility, and clarity of the information to be collected.
- Recommendations to minimize the information collection burden on the affected public, including automated collection techniques.

Section 142.408(a), (c) Requirements: Health Care Providers

In summary, each health care provider would be required to obtain, by application if necessary, a national provider identifier and communicate any changes to the data elements in its file in the national provider system to an enumerator of national provider identifiers within 60 days of the change.

Discussion:

We are especially interested in receiving comments on the possible methods of managing the provider enumeration process. Given the multitude of possible methods associated with managing the enumeration process, we are unable to provide an accurate burden estimate at this time. Below is the repeated provider identifier enumeration discussion, from section II., Provisions of Proposed Regulations, *E. Requirements*, 3. Health care providers, of this preamble.

The process by which health care providers will apply for and obtain NPIs has not yet been established. This proposed rule (in section III., Implementation of the NPI) presents implementation options by which health care providers would apply for and obtain NPIs. We are seeking comments on the options and welcome other options for consideration.

In one of the options we are presenting, we anticipate that the initial enumeration of health care providers that are already enrolled in Medicare, other Federal programs named as health plans, and Medicaid would be done by those health plans. Those health care providers would not have to apply for NPIs but would instead have their NPIs issued automatically. Non-Federal and non-Medicaid providers would need to apply for NPIs to a Federally-directed registry for initial enumeration. The information that would be needed in order to issue an NPI to a health care provider is discussed in this preamble in section IV., Data. Depending on the implementation option selected, Federal and Medicaid health care providers may not need to provide this information because it would already be available to the entities that would be enumerating them. In one of the options, health care providers would be assigned their NPIs in the course of enrolling in the Federal health plan or in Medicaid. Both options may require, to some degree, the development of an application to be used in applying for an NPI.

We would require each health care provider that has an NPI to forward updates to the data in the database to an NPI enumerator within 60 days of the date the change occurs. We are soliciting comments on whether these updates should be applicable to all the data elements proposed to be included in the NPF or only to those data elements that are critical for enumeration. For example, we would like to know whether the addition of a credential should be required to be reported within the 60-day period or whether such updates should be limited to name or address changes or other data elements that are required to enumerate a health care provider.

Given the multitude of possible methods of implementing the enumeration process we are soliciting public comment on each of the following issues, before we submit a copy of this document to the Office of Management and Budget (OMB) for its review of these information collection requirements.

Sections 142.404 and 142.408(b) Requirements: Health Plans and Requirements: Health Care Providers

In summary, each health plan would be required to accept and transmit, either directly or via a health care clearinghouse, the NPI of any health care provider required in any standard transaction. Also, each health care provider must use NPIs wherever required on all standard transactions it accepts or transmits directly.

Discussion:

The emerging and increasing use of health care EDI standards and transactions raises the issue of the applicability of the PRA. The question arises whether a regulation that adopts an EDI standard used to exchange certain information constitutes an information collection subject to the PRA. However, for the purpose of soliciting useful public comment we provide the following burden estimates.

In particular, the initial burden on the estimated 4 million health plans and 1.2 million health care providers to modify their current computer systems software would be 2 hours/$60 per entity, for a total burden of 10.4 million hours/$312 million. While this burden estimate may appear low, on average, we believe it to be accurate. This is based on the assumption that these and the other burden calculations associated with HIPAA administrative simplification systems modifications may overlap. This average also takes into consideration that (1) this standard may not be used by several of the entities included in the estimate, (2) this standard may already be in use by several of the entities included in the estimate, (3) modifications may be performed in an aggregate manner during the course of routine business and/or, (4) modifications may be made by contractors, such as practice management vendors, in a single effort for a multitude of affected entities.

We invite public comment on the issues discussed above. If you comment on these information collection and recordkeeping requirements, please e-mail comments to JBurke1@hcfa.gov (Attn:HCFA–0045) or mail copies directly to the following:

Health Care Financing Administration, Office of Information Services, Information Technology Investment Management Group, Division of HCFA Enterprise Standards, Room C2–26–17, 7500 Security Boulevard, Baltimore, MD 21244–1850. Attn: John Burke HCFA–0045.

and,

Office of Information and Regulatory Affairs, Office of Management and Budget, Room 10235, New Executive Office Building, Washington, DC 20503, Attn: Allison Herron Eydt, HCFA Desk Officer.

VIII. Response to Comments

Because of the large number of items of correspondence we normally receive on **Federal Register** documents published for comment, we are not able to acknowledge or respond to them individually. We will consider all comments we receive by the date and time specified in the **DATES** section of this preamble, and, if we proceed with a subsequent document, we will respond to the comments in the preamble to that document.

IX. Impact Analysis

A. Executive Summary

The costs of implementing the standards specified in the statute are primarily one-time or short-term costs related to conversion. These costs include system conversion/upgrade costs, start-up costs of automation, training costs, and costs associated with implementation problems. These costs will be incurred during the first three years of implementation. The benefits of EDI include reduction in manual data entry, elimination of postal service delays, elimination of the costs

associated with the use of paper forms, and the enhanced ability of participants in the market to interact with each other.

In our analysis, we have used the most conservative figures available and have taken into account the effects of the existing trend toward electronic health care transactions. Based on this analysis, we have determined that the benefits attributable to the implementation of administrative simplification will accrue almost immediately but will not exceed costs for health care providers and health plans until after the third year of implementation. After the third year, the benefits will continue to accrue into fourth year and beyond. The total net savings for the period 1998–2002 will be $1.5 billion (a net savings of $1.7 billion for health plans, and a net cost of $.2 billion for health care providers). The single year net savings for the year 2002 will be $3.1 billion ($1.6 billion for plans and $1.5 billion for providers).

B. Introduction

We assessed several strategies for determining the impact of the various standards that the Secretary will designate under the statute. We could attempt to analyze the costs and savings of each individual standard independently or we could analyze the costs and savings of all the standards in the aggregate. We chose to base our analysis on the aggregate impact of all the standards. Assessing the cost of implementing each standard independently would yield inflated costs. The statute gives health care providers and health plans 24 months (36 months for small health plans) to implement each standard after it is designated. This will give the industry flexibility in determining the most cost-effective way of implementing the standards. A health plan may decide to implement more than one standard at a time or to combine implementation of a standard with other system changes dictated by its own business needs. As a result, overall estimates will be more accurate than individual estimates.

Assessing the benefits of implementing each standard independently would also be inaccurate. While each individual standard is beneficial, the standards as a whole have a synergistic effect on savings. For example, the combination of the standard health plan identifier and standard claim format would improve the coordination of benefits process to a much greater extent than either standard individually. Clearly, the costs and benefits described in this impact analysis are dependent upon all of the rules being published at roughly the same time.

It is difficult to assess the costs and benefits of such a sweeping change with no historical experience. Moreover, we do not yet know enough about the issues and options related to the standards that are still being developed to be able to discuss them here. Our analysis, as a result, will be primarily qualitative and somewhat general. In order to address that shortcoming, we have added a section discussing specific issues related to the provider identifier standard. In each subsequent regulation, we will, if appropriate, include a section discussing the specifics of the standard or standards being designated in the regulation. In addition, we will update this analysis to reflect any additional cost/benefit information that we receive from the public during the comment period for the proposed rule. We solicit comments on this approach and on our assumptions and conclusions.

C. Overall Cost/Benefit Analysis

In order to assess the impact of the HIPAA administrative simplification provisions, it is important to understand current industry practices. A 1993 study by Lewin–VHI (1, p. 4) estimated that administrative costs comprised 17 percent of total health expenditures. Paperwork inefficiencies are a component of those costs, as are the inefficiencies caused by the more than 400 different data transmission formats currently in use. Industry groups such as ANSI ASC X12N have developed standards for EDI transactions, which are used by some health plans and health care providers. However, migration to these recognized standards has been hampered by the inability to develop a concerted approach, and even ''standard'' formats such as the Uniform Bill (UB–92), the standard Medicare hospital claim form (which is used by most hospitals, skilled nursing facilities, and home health agencies for inpatient and outpatient claims) are customized by plans and health care providers.

Several reports have made estimates of the costs and/or benefits of implementing electronic data interchange (EDI) standards. In assessing the impact of the HIPAA administrative simplification provisions, the Congressional Budget Office reported that:

> ''The direct cost of the mandates in Title II of the bill would be negligible. Health plans (and those providers who choose to submit claims electronically) would be required to modify their computer software to incorporate new standards as they are adopted or modified. . . . Uniform standards would generate offsetting savings for plans and providers by simplifying the claims process and coordination of benefits.'' (page 4 of the Estimate of Costs of Private Sector Mandates)

The most extensive industry analysis of the effects of EDI standards was developed by WEDI in 1993, which built upon a similar 1992 report. The WEDI report used an extensive amount of information and analysis to develop its estimates, including data from a number of EDI pilot projects. The report included a number of electronic transactions that are not covered by HIPAA, such as materials management. The report projected implementation costs ranging between $5.3 billion and $17.3 billion (3, p. 9–4) and annual savings for the transactions covered by HIPAA ranging from $8.9 billion and $20.5 billion (3, pp. 9–5 and 9–6). Lewin estimated that the data standards proposed in the Healthcare Simplification and Uniformity Act of 1993 would save from 2.0 to 3.9 percent of administrative costs annually ($2.6 to $5.2 billion based on 1991 costs) (1, p. 12). A 1995 study commissioned by the New Jersey Legislature estimated yearly savings of $760 million in New Jersey alone, related to EDI claims processing, reducing claims rejection, performing eligibility checks, decreasing accounts receivable, and other potential EDI applications (4, p. 316)

We have drawn heavily on the WEDI report for many of our estimates. However, our conclusions differ, especially in the area of savings, for a number of reasons. The WEDI report was intended to assess the savings from a totally EDI environment, which HIPAA does not mandate. Health care providers may still choose to conduct HIPAA transactions on paper. In addition, a significant amount of movement toward EDI has been made (especially in the claims area) since 1993, and it is reasonable to assume that EDI would have continued to grow at some rate even without HIPAA. In order to assess the true impact of the legislation and these regulations, we cannot claim that all subsequent benefits are attributable to HIPAA.

D. Implementation Costs

The costs of implementing the standards specified in the statute are primarily one-time or short-term costs related to conversion. They can be characterized as follows:

1. System Conversion/Upgrade—Health care providers and health plans will incur costs to convert existing software to utilize the standards. Health plans and large health care providers generally have their own information systems, which they maintain with in-

house or contract support. Small health care providers are more likely to use off-the-shelf software developed and maintained by a vendor. Examples of software changes include the ability to generate and accept transactions using the standard (for example, claims, remittance advices) and converting or crosswalking current provider files and medical code sets to chosen standards. However, health care providers have considerable flexibility in determining how and when to accomplish these changes. One alternative to a complete system redesign would be to purchase a translator that reformats existing system outputs into standard transaction formats. A health plan or health care provider could also decide to implement two or more related standards at once or to implement one or more standards during a software upgrade. We expect that each health care provider's and health plan's situation will differ and that each will select a cost-effective implementation scheme. Many health care providers use billing agents or claims clearinghouses to facilitate EDI. (Although we discuss billing agents and claims clearinghouses as separate entities in this impact analysis, billing agents are considered to be the same as clearinghouses for purposes of administrative simplification.) Those entities would also have to reprogram to accommodate standards. We would expect these costs to be passed on to health care providers in the form of fee increases or to be absorbed as a cost of doing business.

2. Start-up Cost of Automation—The legislation does not require health care providers to conduct transactions electronically. Those who do not currently have electronic capabilities would have to purchase and implement hardware and software and train staff to use it in order to benefit from EDI. However, this is likely to be less costly once standards are in place, because there will be more vendors supporting the standard.

3. Training—Health care provider and health plan personnel will require training on use of the various standard identifiers, formats, and code sets. For the most part this will be directed toward administrative personnel, but training in new code sets would be required for clinical staff as well.

4. Implementation problems—The implementation of *any* industry-wide standards will inevitably introduce additional complexity as health plans and health care providers struggle to re-establish communication and process transactions using the new formats, identifiers, and code sets. This is likely to result in a temporary increase in rejected transactions, manual exception processing, payment delays, and requests for additional information.

While the majority of costs are one-time costs related to implementation, there are also on-going costs associated with administrative simplification. Health care providers and health plans may incur on-going costs to subscribe to or purchase documentation and implementation guides related to code sets and standard formats as well as health plan and provider identifier directories or data files. These entities may already be incurring some of these costs, and the costs under HIPAA would be incremental. We will be pursuing low-cost distribution options to keep these costs as low as possible.

In addition, EDI could affect cash flow throughout the health insurance industry. Electronic claims reach the health plan faster and can be processed faster. This has the potential to improve health care providers' cash flow situations while decreasing health plans' earnings on cash reserves.

The only known impact on individuals and employers (other than those that function as health plans) is the need to obtain an identifier.

E. Benefits of Increased Use of EDI for Health Care Transactions

Some of the benefits attributable to increased EDI can be readily quantified, while others are more intangible. For example, it is easy to compute the savings in postage from EDI claims, but attributing a dollar value to processing efficiencies is difficult. In fact, the latter may not result in lower costs to health care providers or health plans but may be categorized as cost avoidance, rather than savings. For example, a health care provider may find that its billing office staff can be reduced from four clerks to three after standards are implemented. The health care provider could decide to reduce the staff size, to reduce the billing office staff and hire additional clinical personnel, or to retain the staff and assign new duties to them. Only the first option results in a ''savings'' (i.e., fewer total dollars spent) for the health care provider or the health care industry. However, all three options allow health care providers to reduce administrative costs associated with billing. We are considering these to be benefits for purposes of this analysis because it is consistent with the way the industry views them.

The benefits of EDI to industry in general are well documented in the literature. One of the most significant benefits of EDI is the reduction in manual data entry. The paper processing of business transactions requires manual data entry at the point in which the data are received and entered into a system. For example, the data on a paper health care transaction from a health care provider to a health plan have to be manually entered into the health plan's business system. If the patient has more than one health plan, the second health plan would also have to manually enter the data into its system if it cannot receive the information electronically. The potential for repeated keying of information transmitted via paper results in increased labor as well as significant opportunities for keying errors. EDI allows for direct data transmission between computer systems, which reduces the need to rekey data.

Another problem with paper-based transactions is that these documents are mostly mailed. Normal delivery times of mailings can vary anywhere from one to several days for normal first class mail. To ship paper documents more quickly can be expensive. While bulk mailings can reduce some costs, paper mailings remain costly. Using postal services can also lead to some uncertainty as to whether the transaction was received, unless more expensive certified mail options are pursued. A benefit of EDI is that the capability exists for the sender of the transaction to receive an electronic acknowledgment once the data is opened by the recipient. Also, because EDI involves direct computer to computer data transmission, the associated delays with postal services are eliminated. With EDI, communication service providers such as value added networks function as electronic post offices and provide 24-hour service. Value added networks deliver data instantaneously to the receiver's electronic mailbox.

In addition to mailing time delays, there are other significant costs in using paper forms. These include the costs of maintaining an inventory of forms, typing data onto forms, addressing envelopes, and the cost of postage. The use of paper also requires significant staff resources to receive and store the paper during normal processing. The paper must be organized to permit easy retrieval if necessary.

F. The Role of Standards in Increasing the Efficiency of EDI

There has been a steady increase in use of EDI in the health care market since 1993, and we predict that there would be some continued growth, even without national standards. However, we believe the upward trend in EDI health care transactions will be enhanced by having national standards

in place. Because national standards are not in place today, there continues to be a proliferation of proprietary formats in the health care industry. Proprietary formats are those that are unique to an individual business. Due to proprietary formats, business partners that wish to exchange information via EDI must agree on which formats to use. Since most health care providers do business with a number of plans, they must produce EDI transactions in many different formats. For small health care providers, this is a significant disincentive for converting to EDI.

National standards would allow for common formats and translations of electronic information that would be understandable to both the sender and receiver. If national standards were in place, there would be no need to determine what format a trading partner was using. Standards also reduce software development and maintenance costs that are required for converting proprietary formats. The basic costs of maintaining unique formats are the human resources spent converting data or in personally contacting entities to gather the data because of incompatible formats. These costs are reflected in increased office overhead, and a reliance on paper and third party vendors as well as communication delays and general administrative hassle. Health care transaction standards will improve the efficiency of the EDI market and will help further persuade reluctant industry partners to choose EDI over traditional mail services.

The statute directs the Secretary to establish standards and sets out the timetable for doing so. The Secretary must designate a standard for each of the specified transactions and identifiers but does have the discretion to designate alternate standards (for example, both a flat file and X12N format for a particular transaction). We have chosen to designate a single standard for each identifier and transaction. On the surface, allowing alternate standards would seem to be a more flexible approach, permitting health care providers and health plans to choose which standard best fits their business needs. In reality, health plans and health care providers generally conduct EDI with multiple partners. Since the choice of a standard transaction format is a bilateral decision between the sender and receiver, most health plans and health care providers would need to support all of the designated standards for the transaction in order to meet the needs of all of their trading partners. Single standards will maximize net benefits and minimize ongoing confusion.

Health care providers and health plans have a great deal of flexibility in how and when they will implement standards. The statute specifies dates by which health plans will have adopted standards, but within that time period health plans can determine when and in which order they will implement standards. Health care providers have the flexibility to determine when it is cost-effective for them to convert to EDI. Health plans and health care providers have a wide range of vendors and technologies from which to choose in implementing standards and can choose to utilize a health care clearinghouse to produce standard transactions. Implementation options for transactions will be the subject of more detailed analysis in a subsequent regulation.

G. Cost/Benefit Tables

The tables below illustrate the costs for health plans and health care providers to implement the standards and the savings that will occur over time as a result of the HIPAA administrative simplification provisions. All estimates are stated in 1998 dollars—no adjustment has been made for present value.

The tables are extracted from a report prepared by our actuaries, who analyzed the impact of the HIPAA administrative simplification provisions. Using standard actuarial principles, they utilized data from a wide range of industry sources as a base for their estimates but revised them as needed to precisely reflect the impact of the legislation. For example, the number of health care providers and percentage of EDI transactions were adjusted to reflect expected 1998 levels. Where data were not available (for example, the percentage of EDI billing for hospices), estimates were developed based on assumptions. Where data from multiple sources were in conflict, the various sources were considered in developing an independent estimate. These processes are complex and are described in detail in the actuaries' report, both in narrative form and in footnotes to tables. The report is too voluminous to publish here, and it is not feasible to describe the processes used to arrive at each and every number. We are presenting here the data that are most critical to assessing the impact of HIPAA administrative simplification provisions and a general description of the processes used to develop those data. The full actuarial report is available for inspection at the HCFA document room and at the following web site: http://aspe.os.dhhs.gov/admnsimp/.

The costs are based on estimates for the cost of a moderately complex set of software upgrades. The range of costs that health plans and health care providers will incur is quite large and is based on such factors as the size and complexity of the existing systems, ability to implement using existing low-cost translator software, and reliance on health care clearinghouses to create standard transactions. The cost of a moderately complex upgrade represents a reasonable midpoint in this range. In addition, we assume that health plans and health care providers with existing EDI systems will incur implementation costs related to manual operations to make those processes compatible with the EDI systems. For example, manual processes may be converted to recognize standard identifiers or to produce paper remittance advices that contain the same data elements as the EDI standard transaction. We have estimated those costs to equal 50 percent of the upgrade cost. Health care providers that do not have existing EDI systems will also incur some costs due to HIPAA, even if they choose not to implement EDI for all of the HIPAA transactions. For example, a health care provider may have to change accounting practices in order to process the revised paper remittance advice discussed above. Health plans must accept HIPAA transactions via EDI, but not all health plans will be called upon to accept all HIPAA transactions. For example, some health plans process only dental claims, while others process claims for institutional and noninstitutional services. We have assumed the average cost for non-EDI health care providers and health plans to be half that of already-automated health care providers and health plans.

Savings are based on the estimated increase in EDI attributable to the HIPAA administrative simplification provisions, multiplied by a per transaction savings for each type of transaction. Our estimates are much lower than those included in the WEDI report, primarily because we only recognize savings that would not have occurred without the legislation. While some industry estimates of gross savings (*not* net of costs) have been as high as $32.8 billion over five years, we believed it was important to utilize the most conservative assumptions possible. It is important to view these estimates as an attempt to furnish a realistic context rather than as precise budgetary predictions. Our estimates also do not include any benefits attributable to qualitative aspects of Administrative simplification, because of the lack of reliable data. (For example, we do not

attempt to put a dollar value on improved public health practices that will result from implementation of standard identifiers.) We strongly encourage comments on how to quantitatively and qualitatively measure the efficiencies realized as a result of the HIPAA administrative simplification standards.

More detailed information regarding data sources and assumptions is provided in the explanations for the specific tables.

Table 1 below shows estimated costs and savings for health plans. The number of entities is based on the WEDI report, Department of Labor data, and various trade publications trended forward to 1998. The cost per health plan for software upgrades is based on the WEDI report, which estimated a range of costs required to implement a fully capable EDI environment. The high-end estimates ranged from two to ten times higher than the low-end estimates. We have used the lower end of the estimates in most cases because, as explained above, HIPAA does not require as extensive changes as envisioned by WEDI. The estimated percentages of health plans that accept electronic billing are based on reports in the 1997 edition of Faulkner & Gray's Health Data Directory (5). The total cost for each type of health plan is the sum of the cost for EDI and non-EDI plans. Cost for EDI plans is computed as follows:

Total Entities × EDI % × Average Upgrade Cost × 1.5

(**Note:** As described above, the cost of changing manual processes is estimated to be half the cost of system changes.)

Cost for non-EDI plans is computed as follows:

Total entities × (1×EDI %) × Average Upgrade Cost × .5

(**Note:** As described above, cost to non-EDI health care providers is assumed to be half the cost of systems changes.)

The $3.9 billion in savings is derived from Table 4, and represents savings to health plans for the first five years of implementation. The assumptions related to these savings are contained in the explanation to Table 4. The savings have been apportioned to each type of health plan based on the ratio of that health plan type's cost to the cost to all health plans. For example, a plan type that incurs ten percent of the costs would be assigned ten percent of the savings. We acknowledge that this is an imprecise method for allocating savings. We have not been able to identify a reliable method for allocating savings to specific types of health plans but nonetheless believed that it was important to present costs and savings together in order to provide a sense of how the HIPAA administrative simplification provisions would affect various entities.

Table 1.—Health Plan Implementation Costs and Savings

[in Millions—1998–2002]

Type of plan	Number of plans	Average cost	Percent EDI	Total cost (in millions)	Savings (in millions)
Large commercials	250	$1,000,000	.90	$350	$620
Smaller commercials	400	500,000	.50	200	354
Blue Cross/Blue Shield	75	1,000,000	.90	106	188
Third-party administered	750	500,000	.50	375	665
HMO/PPO	1,500	250,000	.50	375	665
Self-administered	16,000	50,000	.25	600	1,063
Other employer plans	3,900,000	100	.00	195	345
Total				$2,201	$3,900

Table 2 illustrates the costs and savings attributable to various types of health care providers.

The number of entities (practices, not individual health care providers) is based on the 1992 Census of Services, the 1996 Statistical Abstract of the United States, and the American Medical Association survey of group practices trended forward to 1998. Estimated percentages of EDI billing are based on the 1997 edition of Faulkner & Gray's Health Data Directory or are actuarial estimates.

The cost of software upgrades for personal computers (PCS) is based on reports on the cost of software upgrades to translate and communicate standardized claims forms. The low end is used for smaller practices and the high end for larger practices with PCS. The estimate for mainframe upgrade packages is twice the upper end for PCS. The cost per upgrade for facilities is ours after considering estimates by WEDI and estimates of the cost of new software packages in the literature. The estimates fall within the range of the WEDI estimates, but that range is quite large. For example, WEDI estimates the cost for a large hospital upgrade would be from $50,000 to $500,000. For an explanation of the method for computing Total Cost, see the explanation for Table 1.

The $3.4 billion in savings is derived from Table 4 and represents savings to health care providers for the first five years of implementation. We have included them here to provide a sense of how the HIPAA administrative simplification provisions would affect various entities. As in Table 1, the savings have been apportioned to each type of health care provider based on the ratio of that health care provider type's cost to the cost to all health care providers.

TABLE 2.—HEALTH CARE PROVIDER IMPLEMENTATION COSTS AND SAVINGS

[In millions—1998–2002]

Type of provider	Number of providers	Average cost	Percent EDI	Total cost (in millions)	Savings (in millions)
Hospitals <100 beds	2,850	$100,000	.86	$388	$369
Hospitals 100+ beds	3,150	250,000	.86	1,071	1,019
Nursing facility <100 beds	27,351	10,000	.50	274	260
Nursing facility 100+ beds	8,369	20,000	.50	167	159

TABLE 2.—HEALTH CARE PROVIDER IMPLEMENTATION COSTS AND SAVINGS—Continued

[In millions—1998–2002]

Type of provider	Number of providers	Average cost	Percent EDI	Total cost (in millions)	Savings (in millions)
Home health agency	10,608	10,000	.75	133	126
Hospice	1,191	10,000	.10	7	7
Dialysis facility	1,211	10,000	.75	15	14
Specialty outpatient	7,175	10,000	.75	90	85
Pharmacy	70,100	4,000	.85	379	360
Medical labs	9,000	4,000	.85	49	46
Dental labs	8,000	1,500	.50	12	11
DME	116,800	1,500	.50	175	167
Physicians solo and groups <3	337,000	1,500	.20	354	337
Physicians groups 3+ with mainframe	17,000	8,000	.75	170	162
Physicians groups 3+ with PCS	15,000	4,000	.40	54	51
Physicians groups 3+ no automation	2,000	0	.00	0	0
Osteopaths	35,600	1,500	.10	32	30
Dentists	147,000	1,500	.14	141	134
Podiatrists	8,400	1,500	.05	7	6
Chiropractors	29,000	1,500	.05	24	23
Optometrists	18,200	1,500	.05	14	14
Other professionals	23,600	1,500	.05	20	19
Total				3,574	3,400

Table 3 shows the estimates we used to determine the portion of EDI increase attributable to the HIPAA administrative simplification provisions. The proportion of claims that would be processed electronically even without HIPAA is assumed to grow at the same rate from 1998 through 2002 as it did from 1992 to 1996, except that the rate for hospitals, which is already high, is assumed to grow at one percent annually instead of the two percent that was observed from 1992–1996. The proportion of ''other'' provider claims is high because it includes pharmacies that generate large volumes of claims and have a high rate of electronic billing.

The increase attributable to HIPAA is highly uncertain and is critical to the savings estimate. Our actuary arrived at these estimates based on an analysis of the current EDI environment. Because the rate of growth in electronic billing is already high, there is not much room for added growth. On the other hand, much of the increase that has already occurred is attributable to Medicare and Medicaid; private insurers and third party administrators still have fairly low rates of electronic billing and may benefit significantly from standardization.

TABLE 3.—PERCENT GROWTH IN EDI CLAIMS ATTRIBUTABLE TO HIPAA AS PROVISIONS

[Cumulative]

Type of Provider	1998 (percent)	1999 (percent)	2000 (percent)	2001 (percent)	2002 (percent)
Physician:					
Percent before HIPAA	45	50	55	60	65
Percent after HIPAA	45	52	59	66	73
Difference		2	4	6	8
Hospital:					
Percent before HIPAA	86	87	88	89	90
Percent after HIPAA	86	88	89	91	92
Difference		1	1	2	2
Other:					
Percent before HIPAA	75	76	77	78	79
Percent after HIPAA	75	78	81	84	87
Difference		2	4	6	8

Table 4 shows the annual costs, savings, and net savings over a five-year implementation period. We assume that the costs will be incurred within the first three years, since the statute requires health plans other than small health plans to implement within 24 months and small health plans to implement within 36 months. As each health plan implements a standard, health care providers that conduct electronic transactions with that health plan would also implement the standard. We assume that no savings would accrue in the first year, because not enough health plans and health care providers would have implemented the standards. Savings would increase as more health plans and health care providers implement, exceeding costs in the fourth year. At that point, the majority of health plans and health care providers will have implemented the

standards, and costs will decrease and benefits will increase as a result.

The savings per claim processed electronically instead of manually is based on the lower end of the range estimated by WEDI. We have used $1 per claim for health plans and physicians, and $.75 per claim for hospitals and other health care providers. These estimates are based on surveys of health care providers and health plans. Savings per EDI claim are computed by multiplying the per claim savings times the number of EDI claims attributed to HIPAA. The total number of EDI claims is used in computing the savings to health plans, while the savings for specific health care provider groups is computed using only the number of EDI claims generated by that group (for example, savings to physicians is computed using only physician EDI claims).

WEDI also estimated savings resulting from other HIPAA transactions. The savings per transaction was higher than the savings from electronic billing, but the number of transactions was much smaller. Our estimates for transactions other than claims were derived by assuming a number of transactions and a savings per transaction relative to those assumed for the savings for electronic billing (see table 4a). In general our assumptions are close to those used by WEDI. One major difference is that we derived the number of enrollment/disenrollment transactions from Department of Labor statistics. We used their estimate of the number of events requiring a certificate to be issued, which includes such actions as starting or leaving a firm, children ''aging out'' of coverage and death of policyholder. That estimate is about 45 million events. We used WEDI's estimate that the savings per transaction is about half that of billing transactions.

We also assumed that savings could be expected from simplifications in manual claims. The basic assumption is that the savings are ten percent (per transaction) of those that are projected for conversion to electronic billing. However, it is also assumed that the standards only gradually allow health care providers and health plans to abandon old forms and identifiers because of the many relationships that have been established with other entities that will require a period of overlap.

TABLE 4.—FIVE-YEAR NET SAVINGS

[in billions of dollars]

Costs and savings	1998	1999	2000	2001	2002	Total
Costs:						
Provider	1.3	1.3	1.1	0.0	0.0	3.6
Plan	0.8	0.8	0.7	0.0	0.0	2.2
Total	2.0	2.0	1.7	0.0	0.0	5.8
Savings From Claims Processing:						
Provider	0.0	0.1	0.3	0.4	0.6	1.4
Plan	0.0	0.1	0.2	0.4	0.5	1.2
Total	0.0	0.2	0.5	0.8	1.1	2.6
Savings from Other Transactions:						
Provider	0.0	0.2	0.4	0.7	1.1	2.4
Plan	0.0	0.2	0.4	0.6	0.8	2.0
Total	0.0	0.3	0.8	1.2	1.8	4.1
Savings From Manual Transactions:						
Provider	0.0	0.0	0.1	0.1	0.1	0.3
Plan	0.0	0.0	0.1	0.1	0.1	0.3
Total	0.0	0.1	0.1	0.2	0.2	0.6
Total Savings:						
Provider	(1.3)	(1.0)	(0.5)	1.0	1.5	(0.2)
Plan	(0.8)	(0.5)	0.0	1.2	1.6	1.7
Total	(2.0)	(1.4)	(0.3)	2.2	3.1	1.5

Note: Figures do not total due to rounding.

Table 4a shows the savings per nonclaim transaction as a multiple of claims savings per transaction and the ratio of transactions to number of claims. These values were used to determine the savings for nonclaims transactions.

TABLE 4A.—RELATIVE SAVINGS AND VOLUME OF OTHER TRANSACTIONS

Transaction	Savings	Volume
Claim	1.0	1.0
Claims inquiry	4.0	0.5
Remittance advice	1.5	0.10
Coordination of benefits	0.5	0.10
Eligibility inquiry	0.5	0.05
Enrollment/disenrollment	0.5	0.01
Referral	0.1	0.10

H. Qualitative Impacts of Administrative Simplification

Administration simplification produces more than hard-dollar savings. There are also qualitative benefits that

are less tangible, but nevertheless important. These changes become possible when data can be more easily integrated across entities. WEDI suggests in its 1993 report that there will be a ''ripple-effect'' of implementing an EDI infrastructure on the whole health care delivery system in that there would be a reduction in duplicate medical procedures and processes as a patient is handled by a continuum of health care providers during an episode of care. WEDI also suggests that there will be a reduction in the exposure to health care fraud as security controls on electronic transactions will prevent unauthorized access to financial data.

We also believe that having standards in place would reduce administrative burden and improve job satisfaction. For example, fewer administrative staff would be required to translate procedural codes, since a common set of codes would be used. All codes used in these transactions will be standardized, eliminating different values for data elements (for example, place of service).

Administrative simplification would promote the accuracy, reliability and usefulness of the information shared. For example, today there are any number of claims formats and identifiers in use. We estimate that there are over 400 variations of electronic formats for claims transactions alone. As we noted earlier, these variations make it difficult for parties to exchange information electronically. At a minimum, it requires data to be translated from the sender's own format to the different formats specified by each intended receiver. Also, since industry has taken different approaches to uniquely identifying patients, health care providers and health plans (based on their individual business needs and preferences), it has become difficult to develop methods to compare services across health care providers and health plans. This mixed approach to enumeration has made it extremely difficult for health care researchers to do comparative analysis across settings and over time, and complicates identification of individuals for public health and epidemiologic purposes.

Administrative simplification greatly enhances the sharing of data both within entities and across entities. It facilitates the coordination of benefit information by having in place a standardized set of data that is known to all parties, along with standardized name and address information that tells where to route transactions. Today, health care providers are reluctant to file claims to multiple health plans on the behalf of the patient because information about a patient's eligibility in a health plan is difficult to verify. Additionally, identifying information about health plans is not standardized or centralized for easy access. Most claims filed by patients today are submitted in hardcopy. We anticipate that more health care providers will file claims and coordinate benefits on the patient's behalf once standard identifiers are adopted and this information is made available electronically.

I. Regulatory Flexibility Analysis

The Regulatory Flexibility Act (RFA) of 1980, Public Law 96–354, requires us to prepare a regulatory flexibility analysis if the Secretary certifies that a proposed regulation would have a significant economic impact on a substantial number of small entities. In the health care sector, a small entity is one with less than $5 million in annual revenues. Nonprofit organizations are considered small entities; however, individuals and States are not included in the definition of a small entity. We have attempted to estimate the number of small entities and provide a general discussion of the effects of the statute. We request comments and additional information about our estimates and discussion.

All nonprofit Blue Cross-Blue Shield Plans are considered small entities. Two percent of the approximately 3.9 million employer health plans are considered small businesses. All doctors of osteopathy, dentists, podiatrists, chiropractors, and solo and group physicians' offices with fewer than three physicians are considered small entities. Forty percent of group practices with 3 or more physicians and 90 percent of optometrist practices are considered small entities. Seventy-five percent of all pharmacies, medical laboratories, dental laboratories and durable medical equipment suppliers are assumed to be small entities.

We found the best source for information about the health data information industry to be Faulkner & Gray's Health Data Dictionary. This publication is the most comprehensive we found of its kind. The information in this directory is gathered by Faulkner & Gray editors and researchers who called all of the more than 3,000 organizations that are listed in the book to elicit information about their operations. It is important to note that some businesses are listed as more than one type of business entity. That is because in reporting the information, companies could list themselves as up to three different types of entities. For example, some businesses listed themselves as both practice management vendors as well as claims software vendors because their practice management software was ''EDI enabled.''

All the statistics referencing Faulkner & Gray's come from the 1996 edition of its Health Data Dictionary. It lists 100 third party claims processors, which includes health care clearinghouses (5–33). Faulkner & Gray define third party claims processors as entities under contract that take electronic and paper health care claims data from health care providers and billing companies that prepare bills on a health care provider's behalf. The third party claims processor acts as a conduit to health plans; it batches claims and routes transactions to the appropriate health plan in a form that expedites payment.

Of the 100 third party processors/clearinghouses listed in this publication, seven processed more that 20 million electronic transactions per month. Another 14 handled 2 million or more transactions per month and another 29 handled over a million electronic transactions per month. The remaining 50 entities listed processed less than a million electronic transactions per month. We believe that almost all of these entities have annual revenues of under $5 million and would therefore be considered small entities by our definition.

Another entity that is involved in the electronic transmission of health care transactions is the value added network. Value added networks are involved in the electronic transmission of data over telecommunication lines. We include value added networks in the definition of a health care clearinghouse. Faulkner & Gray list 23 value added networks that handle health care transactions (5, p. 544). After further discussion, the editors clarified that only 8 of the 23 would be considered ''pure'' value added networks. We believe that all of these companies have annual revenues of over $5 million.

A billing company is another entity involved in the electronic routing of health care transactions. It works primarily with physicians either in office or hospital-based settings. Billing companies, in effect, take over the office administrative functions for a physician; they take information such as copies of medical notes and records and prepare claim forms that are then forwarded to an insurer for payment. Billing companies may also handle the receipt of payments, including posting payment to the patient's record on behalf of the health care provider. They can be located within or outside of the physician's practice setting.

The International Billing Association is a trade association representing

billing companies. The International Billing Association estimated that there are approximately 4500 billing companies currently in business in the United States. The International Billing Association's estimates are based on the name and address of actual billing companies that it compiled in developing its mailing list. We believe all of the 4500 billing companies known to be in business have revenues under $5 million annually.

Software system vendors provide computer software applications support to health care clearinghouses, billing companies, and health care providers. They particularly work with health care providers' practice management and health information systems. These businesses provide integrated software applications for such services as accounts receivable management, electronic claims submission (patient billing), record keeping, patient charting, practice analysis and patient scheduling. Some software vendors are also involved in providing applications for translating paper and nonstandard computer documents into standardized formats that are acceptable to health plans.

Faulkner & Gray list 104 physician practice management vendors and suppliers (5, p. 520), 105 hospital information systems vendors and suppliers (5, p. 444), 134 software vendors and suppliers for claims-related transactions (5, p. 486), and 28 translation vendors (5, p. 534). We were unable to determine the number of these entities with revenues over $5 million, but we assume most of these businesses would be considered small entities under our definition.

As discussed earlier in this analysis, the cost of implementing the standards specified in the statute are primarily one-time or short-term costs related to conversion. They were characterized as follows: software conversion, cost of automation, training, implementation problems, and cost of documentation and implementation guides. Rather than repeat that information here, we refer you to the beginning of this impact analysis.

1. Health care Providers and Health Plans

As a result of standard data format and content, health care providers and health plans that wish to do business electronically could do so knowing that whatever capital outlays they make are worthwhile, with some certainty of return on investment. This is because entities that exchange electronic health care transactions would be required to receive and send transactions in the same standard formats using the same health care provider and health plan identifiers. We believe this will be an incentive to small physicians' offices to convert from paper to EDI. In a 1996 Office of the Inspector General study entitled ''Encouraging Physicians to Use Paperless Claims,'' the Office of the Inspector General and HCFA agreed that over $36 million in annual Medicare claims processing savings could be achieved if all health care providers submitting 50 or more Medicare claims per month submitted them electronically. Establishment of EDI standards will make it financially beneficial for many small health care providers to convert to electronic claim submissions, because all health plans would accept the same formats.

Additionally, we believe that those health care providers that currently use health care clearinghouses and billing agencies will see costs stabilize and potentially some cost reduction. This would result from the increased efficiency that health care clearinghouses and billing companies will realize from being able to more easily link with health care industry business partners.

2. Third Party Vendors

Third party vendors include third party processors/clearinghouses (including value added networks), billing companies, and software system vendors. While the market for third party vendors will change as a result of standardization, these changes will be positive to the industry and its customers over the long term. However, the short term/one time costs discussed above will apply to the third party vendor community.

a. Clearinghouses and Billing Companies

As noted above, health care clearinghouses are entities that take health care transactions, convert them into standardized formats acceptable to the receiver, and forward them on to the insurer. Billing companies take on the administrative functions of a physician's office. The market for clearinghouse and billing company services will definitely be affected by the HIPAA administrative simplification provisions; however there appears to be some debate on how the market for these services will be affected.

It is likely that competition among health care clearinghouses and billing companies will increase over time. This is because standards would reduce some of the technical limitations that currently inhibit health care providers from conducting their own EDI. For example, by eliminating the requirement to maintain several different claims standards for different trading partners, health care providers will be able to more easily link themselves directly to health plans. This could negatively affect the market for health care clearinghouses and system vendors that do translation services; however, standards should increase the efficiency in which health care clearinghouses operate by allowing them to more easily link to multiple health plans. The increased efficiency in operations resulting from standards could, in effect, lower their overhead costs as well as attract new health care clearinghouse customers to offset any loss in market share that they might experience.

Another potential area of change is that brought about through standardized code sets. Standards would lower costs and break down logistical barriers that discouraged some health care providers from doing their own coding and billing. As a result, some health care providers may choose an in-house transaction system rather than using a billing company as a means of exercising more control over information. Conversely, health care clearinghouses may acquire some short-term increase in business from those health care providers that are automated but do not use the selected standards. These health care providers would hire health care clearinghouses to take data from the nonstandard formats they are using and convert them into the appropriate standards. Generally, we would also expect health care clearinghouses to identify opportunities to add value to transaction processing and to find new business opportunities, either in marketing promotional materials or in training health care providers on the new transaction sets. Standards would increase the efficiency of health care clearinghouses, which could in turn drive costs for these services down. Health care clearinghouses may be able to operate more efficiently or at a lower cost based on their ability to gain market share. Some small billing companies may be consumed by health care clearinghouses that may begin offering billing services to augment their health care clearinghouse activities. However, most health care providers that use billing companies would probably continue to do so because of the comprehensive and personalized services these companies offer.

Value added networks do not manipulate data but rather transmit data in its native form over telecommunication lines. We anticipate

that the demand for value added network services would increase as additional health care providers and health plans move to electronic data exchange. Standards would eliminate the need for data to be reformatted, which would allow health care providers to purchase value added network services individually rather than as a component of the full range of clearinghouse services.

b. Software Vendors

As noted above, software vendors provide computer software applications support to health care clearinghouses and health care providers. They particularly work with health care providers' practice management and health information systems. We believe these entities would be affected positively, at least in the short term. The implementation of administrative simplification would enhance their business opportunities as they would be involved in developing computerized software solutions that would allow for health care providers and other entities that exchange health care data to integrate the new transaction set into their existing systems. They may also be involved in developing software solutions to manage the crosswalk of existing health care provider and health plan identifiers to the national provider identifier and health plan identifier (PAYERID) until such time as all entities have implemented the identifiers.

J. Unfunded Mandates

We have identified costs to the private sector to implement these standards. Although these costs are unfunded, we expect that they will be offset by subsequent savings as detailed in this impact analysis.

Most costs will occur in the first 3 years following the adoption of the HIPAA standards, with savings to health care providers and health plans exceeding costs in the fourth year. Five-year costs of implementing the HIPAA standards are estimated at $ 5.8 billion for health care providers and health plans combined. Savings to these entities over the same period in electronic claims processing, other electronic transactions (e.g., enrollments and disenrollments), and manual transactions are estimated at $ 7.3 billion, for a net savings of $ 1.5 billion in 5 years.

The costs to State and local governments and tribal organizations are also unfunded, but we do not have sufficient information to provide estimates of the impact of these standards on those entities. Several State Medicaid agencies have estimated that it would cost $1 million per state to implement all the HIPAA standards. However, the Congressional Budget Office analysis stated that ''States are already in the forefront in administering the Medicaid program electronically; the only costs—which should not be significant—would involve bringing the software and computer systems for the Medicaid programs into compliance with the new standards.'' The report went on to point out that Medicaid State agencies have the option to compensate by reducing other expenditures and that other State and local government agencies are likely to incur less in the way of costs since most of them will have fewer enrollees. Moreover, the Federal government pays a portion of the cost of converting State Medicaid Management Information Systems (MMIS) as Federal Financial Participation—75 percent for system maintenance changes and 90 percent for new software (if approved). Many States are in the process of changing systems as they convert many of the current functions in the move to enroll Medicaid beneficiaries in managed care.

K. Specific Impact of Provider Identifier

This is the portion of the impact analysis that relates specifically to the standard that is the subject of this regulation—the health care provider identifier. This section describes specific impacts that relate to the provider identifiers. However, as we indicated in the introduction to this impact analysis, we do not intend to associate costs and savings to specific standards. In addition, this section assesses the relative cost impact of the various identifier options and implementation options set out in the regulation.

Although we cannot determine the specific economic impact of the standard being proposed in this rule (and individually each standard may not have a significant impact), the overall impact analysis makes clear that, collectively, all the standards will have a significant impact of over $100 million on the economy. Also, while each standard may not have a significant impact on a substantial number of small entities, the combined effects of all the proposed standards may have a significant effect on a substantial number of small entities. Therefore, the following impact analysis should be read in conjunction with the overall impact analysis.

In accordance with the provisions of Executive Order 12866, this proposed rule was reviewed by the Office of Management and Budget.

1. Affected entities.

a. Health care providers.

Health care providers that conduct electronic transactions with health plans would have to begin to use the NPI in those transactions. Health care providers that are indirectly involved in electronic transactions (for example, by submitting a paper claim that the health plan transmits electronically to a secondary payer) may also use the NPI. Any negative impact on these health care providers generally would be related to the initial implementation period. They would incur implementation costs for converting systems, especially those that generate electronic claims, from current provider identifiers to the NPI. Some health care providers would incur those costs directly and others would incur them in the form of fee increases from billing agents and health care clearinghouses.

Health care providers not only would have to include their own NPI on claims, but they would also have to obtain and use NPIs of other health care providers (for example, for referring and ordering). This would be a more significant implementation workload for larger institutional health care providers, such as hospitals, that would have to obtain the NPIs for each physician practicing in the hospital. However, these health care providers are accustomed to maintaining these types of data. There would also be a potential for disruption of claims processes and timely payments during a particular health plan's transition to the NPI. Some health care providers that do not do business with government programs may be resistant to obtaining an NPI and providing data about themselves that would be stored in a national database.

Health care providers would also have to obtain an NPI and report changes in pertinent data. Under one of the enumeration options presented in this preamble, current Medicare providers will receive their NPIs automatically, and other health care providers may be enumerated in this manner to the extent that appropriate valid data files are available. New health care providers would have to apply for an NPI. This does not impose a new burden on health care providers. The vast majority of health plans issue identifiers to the health care providers with whom they transact business in order to facilitate the electronic processing of claims and other transactions. The information that health care providers must supply in order to receive an NPI is significantly less than the information most health plans require to enroll a health care provider. There would be no new cost

burden; the statute does not support our charging health care providers to receive an NPI.

After implementation, health care providers would no longer have to keep track of and use different identifiers for different insurers. This would simplify provider billing systems and processes and reduce administrative expenses. A standard identifier would facilitate and simplify coordination of benefits, resulting in faster, more accurate payments. Under option 2 of the enumeration options, (see section IX.K.2.d. of this preamble, on enumerators), many health care providers (all those doing business with Medicare) would receive their NPIs automatically and would be able to report changes in the data contained in the NPS to a single place and have the changes made available to many health plans.

b. Health plans.

Health plans that engage in electronic commerce would have to modify their systems to use the NPI. This conversion would have a one-time cost impact on Federal, State, and private health plans alike and is likely to be more costly for health plans with complex systems that rely on intelligent provider numbers. Disruption of claims processing and payment delays could result. However, health plans would be able to schedule their implementation of the NPI and other standards in a manner that best fits their needs, as long as they meet the deadlines specified in the legislation.

Once the NPI has been implemented, health plans' coordination of benefits activities would be greatly simplified because all health plans would use the same health care provider identifier. In addition, utilization review and other payment safeguard activities would be facilitated, since health care providers would not be able to use multiple identifiers and could be easily tracked over time and across geographic areas. Health plans currently assign their own identification numbers to health care providers as part of their enrollment procedures, and this would no longer be necessary. Existing enumeration systems maintained by Federal health programs would be phased out, and savings would result.

c. Health care clearinghouses.

Health care clearinghouses would face impacts (both positive and negative) similar to those experienced by health plans. However, implementation would likely be more complex, because health care clearinghouses deal with many health care providers and health plans and would have to accommodate both old and new health care provider identifiers until all health plans with which they deal have converted.

2. Effects of Various Options.

a. Guiding Principles for Standard Selection.

The implementation teams charged with designating standards under the statute have defined, with significant input from the health care industry, a set of common criteria for evaluating potential standards. These criteria are based on direct specifications in the HIPAA, the purpose of the law, and principles that support the regulatory philosophy set forth in Executive Order 12866 of September 30, 1993, and the Paperwork Reduction Act of 1995. These criteria also support and are consistent with the principles of the Paperwork Reduction Act of 1995. In order to be designated as a standard, a proposed standard should:

- Improve the efficiency and effectiveness of the health care system by leading to cost reductions for or improvements in benefits from electronic HIPAA health care transactions. This principle supports the regulatory goals of cost-effectiveness and avoidance of burden.
- Meet the needs of the health data standards user community, particularly health care providers, health plans, and health care clearinghouses. This principle supports the regulatory goal of cost-effectiveness.
- Be consistent and uniform with the other HIPAA standards—their data element definitions and codes and their privacy and security requirements—and, secondarily, with other private and public sector health data standards. This principle supports the regulatory goals of consistency and avoidance of incompatibility, and it establishes a performance objective for the standard.
- Have low additional development and implementation costs relative to the benefits of using the standard. This principle supports the regulatory goals of cost-effectiveness and avoidance of burden.
- Be supported by an ANSI-accredited standards developing organization or other private or public organization that will ensure continuity and efficient updating of the standard over time. This principle supports the regulatory goal of predictability.
- Have timely development, testing, implementation, and updating procedures to achieve administrative simplification benefits faster. This principle establishes a performance objective for the standard.
- Be technologically independent of the computer platforms and transmission protocols used in HIPAA health transactions, except when they are explicitly part of the standard. This principle establishes a performance objective for the standard and supports the regulatory goal of flexibility.
- Be precise and unambiguous, but as simple as possible. This principle supports the regulatory goals of predictability and simplicity.
- Keep data collection and paperwork burdens on users as low as is feasible. This principle supports the regulatory goals of cost-effectiveness and avoidance of duplication and burden.
- Incorporate flexibility to adapt more easily to changes in the health care infrastructure (such as new services, organizations, and provider types) and information technology. This principle supports the regulatory goals of flexibility and encouragement of innovation.

We assessed the various candidates for a provider identifier against the principles listed above, with the overall goal of achieving the maximum benefit for the least cost. We found that the NPI met all the principles, but no other candidate identifier met all the principles, or even those principles supporting the regulatory goal of cost-effectiveness. We are assessing the costs and benefits of the NPI, but we did not assess the costs and benefits of other identifier candidates, because they did not meet the guiding principles. We invite your comments on the costs and benefits of the alternative candidate NPI options for the various market segments.

b. Need To Convert

Because there is no standard provider identifier in widespread use throughout the industry, adopting any of the candidate identifiers would require most health care providers, health plans and health care clearinghouses to convert to the new standard. In the case of the NPI, all health care providers would have to convert because this identifier is not in use presently. As we pointed out in our analysis of the candidates, even the identifiers that are in use are not used for all purposes or for all provider types. The selection of the NPI does not impose a greater burden on the industry than the nonselected candidates, and presents significant advantages in terms of cost-effectiveness, universality, uniqueness and flexibility.

c. Complexity of Conversion

Some existing provider identifier systems assign multiple identifiers to a single health care provider in order to distinguish the multiple identities the health care provider has in the system. For example, in these systems, the health care provider may have a

different identifier to represent each ''pay-to'' identity, contract or provider agreement, practice location, and specialty or provider type. Since the NPI is a unique identifier for each health care provider, it would not distinguish these multiple identities. Systems that need to distinguish these identities would need to use data other than the NPI to do so. The change to use other data would add complexity to the conversion to the NPI or to any other standard provider identifier, but it is necessary in order to achieve the goal of unique identification of the health care provider.

The complexity of the conversion would also be significantly affected by the degree to which health plans' processing systems currently rely on intelligent identifiers. For example, a health plan may route claims to different processing routines based on the type of health care provider by keying on a provider type code included in the identifier. Converting from one unintelligent identifier to another is less complex than modifying software logic to obtain needed information from other data elements. However, the use of an unintelligent identifier is required in order to meet the guiding principle of assuring flexibility.

Specific technology limitations of existing systems could affect the complexity of conversion. For example, some existing provider data systems use a telephone keypad to enter data. Data entry of alpha characters is inconvenient in these systems. In order to mitigate this inconvenience, we would implement the NPI by initially assigning numeric NPIs. After all numeric possibilities have been exhausted, we would introduce alpha characters in one position at a time. This implementation strategy would allow additional time for systems with technology limitations to overcome conversion difficulties.

In general, the shorter the identifier, the easier it is to implement. It is more likely that a shorter identifier, such as the NPI, would fit into existing data formats.

The selection of the NPI does not impose a greater burden on the industry than the nonselected candidates.

d. Enumerators

Based on the analysis discussed earlier in the preamble, we assess the two most viable combinations of choices for the entities that would enumerate health care providers. We do not assess choices that permit large numbers of enumerators (for example, all health plans, educational institutions, professional associations) because these choices do not satisfy the critical programmatic requirements of maintaining a high degree of data quality and consistency and minimizing confusion for health care providers.

No matter which of the two enumeration options is chosen, certain costs and impacts would not vary.

- We assume that the NPS would be used in both options to generate NPIs and serve as the central enumeration system and database. We began to develop the NPS for Medicare use, and this effort, which was funded by HCFA, is now nearing completion. As the NPS becomes national in scope, we estimate that the cost of maintaining the NPS software, hardware, and telecommunications, and operating a Help Desk to deal with user questions, would cost approximately $10.4 million over the first three years of operation and approximately $2.9 million per year thereafter. Roughly half of these costs are attributable to telecommunications expenses. This analysis presumes the availability of Federal funds to support the development and operations of the NPS. However, we are seeking comments on how the NPS could be funded once it becomes national.
- We further assume that, in both options, the same implementation strategy of loading the NPS database using health plans' existing prevalidated files will be utilized to the extent possible. This would reduce costs by not repeating the process of soliciting, receiving, controlling, validating and keying applications from health care providers that have already been enumerated by a trusted source. For example, we would use existing Medicare provider files to initially load the NPS database. The majority of work to reformat and edit these files has already been completed.

We estimate that approximately 1.2 million current health care providers and 30,000 new health care providers annually would require NPIs because they conduct HIPAA transactions.

An additional 3 million health care providers (120,000 new health care providers annually) do not conduct HIPAA transactions, but they may choose to be enumerated at some future time. We refer to these health care providers as ''non-HIPAA-transaction health care providers'' (see section 4. Enumeration Phases of this preamble). These health care providers would be primarily individual practitioners such as registered nurses and pharmacists who perform services in institutions and whose services are not billed by the institution. More research is required on the time frame and process for enumerating these health care providers.

Based on Medicare carriers' costs, we have estimated that the average cost to enumerate a health care provider should not exceed $50. Enumeration activities would include assisting health care providers and answering questions, accepting the application for an NPI; validating as many of the data elements as possible at the point of application to assure the submitted data are accurate and the application is authentic; entering the data into the NPS to obtain an NPI for the health care provider; researching cases where there is a possible match to a health care provider already enumerated; notifying the health care provider of the assigned NPI; and entering updated data into the NPS when notified by the health care provider. The cost of processing a data update is not known, and for purposes of this analysis we are assuming an average cost of $10 per update transaction, and that 5 percent per year of these health care providers on file would have updated data. However, we estimate that approximately 15 percent of health care providers that do not conduct business with Federal health plans or Medicaid would require updates each year. These health care providers may be unfamiliar with the terminology for some of the information they need to provide in order to be enumerated; thus, they may need to correct errors they could have made in completing the applications for NPIs or may have a need to change some of that information for other reasons. The per transaction cost would be lower if practice location addresses and membership in groups were not collected (see section IV., Data, and section IX.E., Maintenance of the Database, of this preamble) and if enumerators were already validating data as part of their own enrollment processes. The number of updates would also be affected by the practice location and group membership issues because these data are more volatile than demographic data (see IV., Data, and IX.E., Maintenance of the Database, of this preamble).

For a similarly sized commercial numbering system that uniquely identifies corporations and assigns unique identifiers, we have received independent estimates from Dun & Bradstreet (D&B) of $7 per enumeration and $3 per update. The D&B estimates are based on the cost of assigning and maintaining the Data Universal Numbering System (D–U–N–S) number. The D–U–N–S number is a nine-digit, non-indicative number assigned to each record in D&B's file. It uses a modulus

10 check digit in the ninth position. Over 47 million D–U–N–S numbers have been assigned, worldwide, with 22 million attributed to locations in the United States. D&B uses the D–U–N–S number to enumerate businesses, including commercial sites, sole proprietorships, cottage industries, educational institutions, not-for-profits, and government entities, but does not maintain records on private individuals. D&B estimates an average cost of $7 to add a record to its database and assign it a unique record identifier. To establish a record and ensure uniqueness, D&B requires the entity's legal name, any ''doing business as'' names, physical address, telephone number, chief executive, date started, line of business, number of employees and relationship(s) with other business entities. D&B runs a daily computer process to audit all records added during the day and extracts any that may be duplicates for research by an analyst. Updates to each record are estimated at approximately $3 but can run as high as $30 per year for very robust database entries, some of which contain 1500 different data elements.

The D&B estimates may be understated for our purposes because the four to six data elements used to uniquely identify the enumerated corporations do not require verification. We welcome comments on which data elements are required to uniquely identify health care providers (individuals, groups, and organizations), on whether verification of the data is necessary for purposes of enumeration, and on estimates of the cost to enumerate and update that minimum data set. We understand that the cost would be lower if the number and complexity of the data elements were reduced, but this cost must be balanced against the level of confidence that can be placed in the uniqueness of the health care providers identified. Specific consideration of these tradeoffs in submitted comments will be very helpful.

The $50 estimated average cost to enumerate a health care provider is an upper limit. The cost would decrease significantly if the second data alternative is selected (see section IV.B., Practice Addresses and Group/Organization Options, of this preamble). Under this alternative, the NPS would capture only one practice address for an individual or organization provider. It would not assign location codes. The NPS would not link the NPI of a group provider to the NPIs of individuals who are members of the group. Costs would decrease because we would collect significantly less data at the time of enumeration, and the data that would be collected would not need to be updated very frequently. Recent consultations with the industry reveal a growing consensus for this alternative.

Table 5 below provides estimates as to the cost of each enumeration option for start-up and outyear, with Federal, State, and private costs, for HIPAA-transaction and non-HIPAA-transaction health care providers, and the Federal costs of the NPS. We define ''start-up'' as the first 3 years during which the NPS becomes operational nationally and the bulk of the health care providers requiring NPIs are enumerated. ''Outyear'' would be each subsequent year, in which the majority of actions would be enumerations of new health care providers and provider updates. Assumptions follow the table.

TABLE 5.—ENUMERATION COSTS: FEDERAL, STATE, AND PRIVATE

Enumeration Costs: Federal, State, and Private				
Costs to:	Start-up costs HIPAA-transaction providers	Outyear costs HIPAA-transaction providers	Start-up costs non-HIPAA-transaction providers	Outyear costs non-HIPAA-transaction providers
OPTION 1—REGISTRY				
Federal for NPS	10,400,000	2,900,000	.....	.....
Federal for non-HIPAA-transaction health care providers	.....	.....	165,000,000	7,500,000
Federal	64,560,000	2,280,000	.....	.....
State	0	0	.....	.....
Private	0	0	.....	.....
Total	74,960,000	5,180,000	.....	.....
OPTION 2—COMBINATION OF FEDERAL HEALTH PLANS, MEDICAID STATE AGENCIES, AND FEDERALLY-DIRECTED REGISTRY				
Federal for NPS	10,400,000	2,900,000	.....	.....
Federal for non-HIPAA-transaction health care providers	.....	.....	165,000,000	7,500,000
Federal (if all Medicaid State agencies participate)	9,990,000	495,000	.....	.....
Federal (if 5% of Medicaid State agencies decline to participate)	10,310,000	505,000	.....	.....
State (if all Medicaid State agencies participate)	0	0	.....	.....
State (if 5% of Medicaid State agencies decline to participate)	0	0	.....	.....
Private	0	0	.....	.....
Total (if all Medicaid State agencies participate)	20,390,000	3,395,000	.....	.....
Total (if 5% of Medicaid State agencies decline to participate)	20,710,000	3,405,000	.....	.....

Assumptions

1. Definitions

a. ''HIPAA-transaction health care provider'' means a health care provider that we would require to have an NPI; that is, a health care provider that must be identified in the transactions specified in HIPAA.

b. ''Non-HIPAA-transaction health care provider'' means a health care provider that we would not require to have an NPI.

c. ''Start-up'' means the first 3 years in which the NPS becomes operational nationally and the bulk of the health care providers requiring NPIs are enumerated. It is the sum of the cost of enumerating existing health care providers in the first year plus the

annual cost of enumerating new and updating existing health care providers for the 2 subsequent years.

d. ''Outyear'' means each subsequent year in which the majority of actions would be enumerating new health care providers and updating existing ones. It is the sum of the cost of enumerating new health care providers plus the cost of updating existing health care providers.

2. The cost to enumerate a health care provider that is not enrolled or enrolling in a Federal health plan (e.g., Medicare, CHAMPUS) or Medicaid is estimated to be $50. (See Assumption 4.)

3. The cost to update information on a health care provider that is not enrolled or enrolling in a Federal health plan (e.g., Medicare, CHAMPUS) or Medicaid is estimated to be $10. (See Assumption 4.)

4. The cost to Federal health plans (e.g., Medicare, CHAMPUS) and Medicaid to enumerate or update their own health care providers is relatively small as these health plans must collect the same information to enroll or update the health care providers in their own programs. Possible up-front costs to these health plans and Medicaid would be offset by simpler, more efficient coordination of benefits, elimination of the need to maintain multiple enumeration systems, and elimination of the need to maintain other provider numbers. The Federal Government pays 75 percent of Medicaid State agencies' costs to enumerate and update health care providers. Because all of these costs are relatively small and would be offset by savings, they are considered to be $0 (zero).

5. This analysis presumes the availability of Federal funds to support the registry.

6. It is estimated that 5 percent of existing HIPAA-transaction health care providers that conduct business with Federal health plans or Medicaid require updates annually; 15 percent of the remaining HIPAA-transaction health care providers require updates annually.

7. It is estimated that 5 percent of Medicaid State agencies may decline to participate in enumerating/updating their health care providers. The registry would enumerate/update that 5 percent.

8. Non-HIPAA-transaction health care providers would not be enumerated in the initial phases of enumeration. These costs are estimated to be $165,000,000 for start-up and $7,500,000 for outyear. The registry would enumerate/update these health care providers only if funds are available.

Option 1 calls for all 1.2 million HIPAA-transaction health care providers to be enumerated by a Federally-directed registry. The one-time cost for the registry to assign NPIs to existing HIPAA-transaction health care providers would depend on the extent to which existing files could be used. The cost could be as high as $60 million (1.2 million health care providers × $50) or as low as $9 million (see option 2). The low estimate assumes that prevalidated provider files are available for 100 percent of all Federal and Medicaid providers. The annual outyear cost would be $2.1 million (30,000 new health care providers × $50 plus 60,000 updates × $10). The Federal health plans and Medicaid State agencies would no longer have to assign their own identifiers, which would result in some savings, but they would still incur costs related to provider enrollment activities that would duplicate Federally-directed registry functions (for example, duplicate collection and verification of some information).

Option 2 calls for enumeration of HIPAA-transaction health care providers to be performed by a combination of Federal programs named as health plans, Medicaid State agencies, and a Federally-directed registry. This registry would enumerate non-Federal, non-Medicaid providers. All enumerators would receive, validate, and enter application data into the NPS and would communicate with health care providers. Data files would be available from a central source. The registry would utilize the NPS and would be operated under Federal oversight but could, if appropriate, be contracted out.

Medicare, Medicaid, CHAMPUS, and the Department of Veterans Affairs already assign identifiers to health care providers with whom they conduct business. They would simply begin to use the NPS to issue NPIs instead of using their own systems to assign the identifiers they now use. Initially, these Federal health plans and Medicaid may incur up-front costs in issuing NPIs; however, these additional costs would be offset by savings from the fact that each health care provider would only have to be enumerated once; multiple enumeration systems would not have to be maintained; other provider numbers would not have to be maintained; and coordination of benefits would be simpler and more efficient. We estimate that approximately 5 percent of Medicaid State agencies may decline to participate (that is, they would not enumerate and update their health care providers). These health care providers would need to be enumerated and updated by the Federally-directed registry; however, that cost would be offset by savings realized by the discontinuance of UPIN assignment and maintenance of the UPIN registry. We estimate that approximately 85 percent of the health care providers that conduct HIPAA transactions would be enumerated in this manner (75 percent by Federal health plans, 10 percent by Medicaid). Additional costs, if any, to enumerate these health care providers or update their data would be insignificant.

The remaining 15 percent of health care providers that conduct HIPAA transactions (180,000) would be enumerated by a Federally-directed registry. The one-time cost of enumerating these health care providers would be $9 million (180,000 health care providers × $50). The cost of enumerating 4,500 new health care providers would be $225,000 per year, and the cost to process 27,000 updates would be $270,000, for a total registry cost of $495,000 per outyear.

Based on the cost estimates in this analysis, option 1 is considerably more expensive than option 2. We believe option 2 to be preferable to option 1 in that Federal programs and Medicaid State agencies would enumerate and update their own health care providers. The enumeration functions of the 5 percent of Medicaid State agencies that may decline to enumerate and update their own health care providers would fall to the Federally-directed registry.

The initial and ongoing cost of developing, implementing and operating the NPS would be borne by the Federal government, depending on the availability of funds; some of this cost could be offset by ceasing current enumeration systems like Medicare's UPIN registry.

The previous analysis relates only to health care providers that are required to have an NPI to perform HIPAA transactions. The remaining health care providers would not be required to obtain an NPI but could do so if they wished to have one for other reasons. We indicated in the Implementation section of this preamble that we would not issue NPIs to these health care providers until the health care providers that needed NPIs to conduct any of the electronic transactions specified in HIPAA had been enumerated. The cost of enumerating the approximately 3 million non-HIPAA-transaction health care providers could be as high as $150 million (3 million health care providers × $50). We are soliciting comments on sources of information on non-HIPAA-transaction health care providers. We cannot provide a realistic estimate of the cost of enumerating these health care providers without this additional input.

e. Maintenance of the Database

Another cost implication is the maintenance of the database being developed by the NPS. (We discuss this cost implication in more detail in section IV. Data but believe the general discussion should be repeated here in the impact analysis as well.) That database, known as the National Provider File (NPF), is currently being designed to contain the data elements shown in the table entitled, ''National Provider File Data Elements'' in section IV. Data, *A. Data Elements*, earlier in this preamble. The majority of the information is used to uniquely identify a health care provider; other information is used for administrative purposes. A few of the data elements are collected at the request of potential users that have been working with HCFA in designing the database prior to the passage of HIPAA. All of these data elements represent only a fraction of the information that would comprise a provider enrollment file. The data elements shown in the ''National Provider File Data Elements'' table earlier in the preamble, plus cease/effective/termination dates, switches (yes/no), indicators, and history, are being considered as those that would form the NPF. The table includes appropriate comments. The table does not display systems maintenance or similar fields, or health care provider cease/effective/termination dates.

We need to consider the benefits of retaining all of the data elements shown in the table versus lowering the cost of maintaining the database by keeping only the minimum number of data elements needed for unique provider identification. We solicit input on the composition of the minimum set of data elements needed to uniquely identify each type of health care provider. In order to consider the inclusion or exclusion of data elements, we need to assess their purpose and use.

The data elements in the table with a purpose of ''I'' are being proposed to identify a health care provider, either in the search process (which is electronic) or in the investigation of health care providers designated as possible matches by the search process. These data elements are critical because unique identification is the keystone of the NPS.

The data elements in the table with a purpose of ''A'' are not essential to the identification processes mentioned above, but they nonetheless are valuable. Certain ''A'' data elements can be used to contact a health care provider for clarification of information or resolution of issues encountered in the enumeration process and for sending written communications; other ''A'' data elements (e.g., Provider Enumerate Date, Provider Update Date, Establishing Enumerator/Agent Number) are used to organize and manage the data.

The data elements in the table with a purpose of ''U'' are collected at the request of potential users of the information in the system. While not used by the system's search process to uniquely identify a health care provider, Race (with a purpose of ''U'') is nevertheless valuable in the investigation of health care providers designated as possible matches as a result of that process. In addition, Race is important to the utility of the NPS as a statistical sampling frame. Race is collected ''as reported''; that is, it is not validated. It is not maintained, only stored. The cost of keeping this data element is virtually nil. Other data elements (Resident/Intern Code, Provider Certification Code and Number, and Organization Type Control Code) with a purpose of ''U'', while not used for enumeration of a health care provider, have been requested to be included by some members of the health care industry for reports and statistics. These data elements are optional and do not require validation; many remain constant by their nature; and the cost to store them is negligible.

The data elements that we judge will be expensive to either validate or maintain (or both) are the license information, provider practice location addresses, and membership in groups. We solicit comments on whether these data elements are necessary for the unique enumeration of health care providers and whether validation or maintenance is required for that purpose.

Licenses may be critical in determining uniqueness of a health care provider (particularly in resolving identifies involving compound surnames) and are, therefore, considered to be essential by some. License information is expensive to validate initially, but it is not expensive to maintain because it does not change frequently.

The practice location addresses can be used to aid in investigating possible provider matches, in converting existing provider numbers to NPIs, and in research involving fraud or epidemiology. Location codes, which are discussed in detail in section *B. Practice Addresses and Group/Organization Options* of this preamble, could be assigned by the NPS to point to and identify practice locations of individuals and groups. Some potential users felt that practice addresses changed too frequently to be maintained efficiently at the national level. The average Medicare physician has two to three addresses at which he or she practices. Group providers may have many more practice locations. We estimate that 5 percent of health care providers require updates annually and that addresses are one of the most frequently changing attributes. As a result, maintaining more than one practice address for an individual provider on a national scale could be burdensome and time consuming. Many potential users believe that practice addresses could more adequately be maintained at local, health-plan specific levels.

Some potential users felt that membership in groups was useful in identifying health care providers. Many others, however, felt that these data are highly volatile and costly to maintain. These users felt it was unlikely that membership in groups could be satisfactorily maintained at the national level.

We welcome comments on the data elements proposed for the NPF and input as to the potential usefulness and tradeoffs for these elements such as those discussed above.

References

1. Dobson, Allen, Ph.D. and Bergheiser, Matthew; ''Reducing Administrative Costs in a Pluralistic Delivery System through Automation;'' Lewin-VHI Report prepared for the Healthcare Financial Management Association; 1993.

2. Congressional Budget Office; ''Federal Cost Estimate for H.R. 3070;'' 1996.

3. Workgroup for Electronic Data Interchange; ''Report,'' 1993.

4. ''Electronic Network Solution for Rising Healthcare Costs;'' New Jersey Institute of Technology and Thomas Edison State College, 1995.

5. Faulkner & Gray's Health Data Directory, 1997 Edition; Kurt T. Peters, Publisher (also earlier editions).

List of Subjects in 45 CFR Part 142

Administrative practice and procedure, Health facilities, Health insurance, Hospitals, Medicare, Medicaid.

Accordingly, 45 CFR subtitle A, subchapter B, would be amended by adding Part 142 to read as follows:

Note to Reader: This proposed rule and another proposed rule found elsewhere in this **Federal Register** are two of several proposed rules that are being published to implement the administrative simplification provisions of the Health Insurance Portability and Accountability Act of 1996. We propose to establish a new 45 CFR Part 142. Proposed Subpart A—General Provisions is exactly the same in each rule unless we have added new sections or definitions to incorporate

additional general information. The subparts that follow relate to the specific provisions announced separately in each proposed rule. When we publish the first final rule, each subsequent final rule will revise or add to the text that is set out in the first final rule.

PART 142—ADMINISTRATIVE REQUIREMENTS

Subpart A—General Provisions

Sec.
142.101 Statutory basis and purpose.
142.102 Applicability.
142.103 Definitions.
142.104 General requirements for health plans.
142.105 Compliance using a health care clearinghouse.
142.106 Effective date of a modification to a standard or implementation specification.

Subparts B—C [Reserved]

Subpart D—National Provider Identifier Standard

142.402 National provider identifier standard.
142.404 Requirements: Health plans.
142.406 Requirements: Health care clearinghouses.
142.408 Requirements: Health care providers.
142.410 Effective dates of the initial implementation of the national provider identifier standard.

Authority: Sections 1173 and 1175 of the Social Security Act (42 U.S.C. 1320d-2 and 1320d-4).

Subpart A—General Provisions

§ 142.101 Statutory basis and purpose.

Sections 1171 through 1179 of the Social Security Act, as added by section 262 of the Health Insurance Portability and Accountability Act of 1996, require HHS to adopt national standards for the electronic exchange of health information in the health care system. The purpose of these sections is to promote administrative simplification.

§ 142.102 Applicability.

(a) The standards adopted or designated under this part apply, in whole or in part, to the following:

(1) A health plan.

(2) A health care clearinghouse when doing the following:

(i) Transmitting a standard transaction (as defined in § 142.103) to a health care provider or health plan.

(ii) Receiving a standard transaction from a health care provider or health plan.

(iii) Transmitting and receiving the standard transactions when interacting with another health care clearinghouse.

(3) A health care provider when transmitting an electronic transaction as defined in § 142.103.

(b) Means of compliance are stated in greater detail in § 142.105.

§ 142.103 Definitions.

For purposes of this part, the following definitions apply:

Code set means any set of codes used for encoding data elements, such as tables of terms, medical concepts, medical diagnostic codes, or medical procedure codes.

Health care clearinghouse means a public or private entity that processes or facilitates the processing of nonstandard data elements of health information into standard data elements. The entity receives health care transactions from health care providers, health plans, other entities, or other clearinghouses, translates the data from a given format into one acceptable to the intended recipient, and forwards the processed transaction to the appropriate recipient. Billing services, repricing companies, community health management information systems, community health information systems, and ''value-added'' networks and switches that perform these functions are considered to be health care clearinghouses for purposes of this part.

Health care provider means a provider of services as defined in section 1861(u) of the Social Security Act, a provider of medical or other health services as defined in section 1861(s) of the Social Security Act, and any other person who furnishes or bills and is paid for health care services or supplies in the normal course of business.

Health information means any information, whether oral or recorded in any form or medium, that—

(1) Is created or received by a health care provider, health plan, public health authority, employer, life insurer, school or university, or health care clearinghouse; and

(2) Relates to the past, present, or future physical or mental health or condition of an individual, the provision of health care to an individual, or the past, present, or future payment for the provision of health care to an individual.

Health plan means an individual or group plan that provides, or pays the cost of, medical care. Health plan includes the following, singly or in combination:

(1) Group health plan. A group health plan is an employee welfare benefit plan (as currently defined in section 3(1) of the Employee Retirement Income and Security Act of 1974, 29 U.S.C. 1002(1)), including insured and self-insured plans, to the extent that the plan provides medical care, including items and services paid for as medical care, to employees or their dependents directly or through insurance, or otherwise, and

(i) Has 50 or more participants; or

(ii) Is administered by an entity other than the employer that established and maintains the plan.

(2) Health insurance issuer. A health insurance issuer is an insurance company, insurance service, or insurance organization that is licensed to engage in the business of insurance in a State and is subject to State law that regulates insurance.

(3) Health maintenance organization. A health maintenance organization is a Federally qualified health maintenance organization, an organization recognized as a health maintenance organization under State law, or a similar organization regulated for solvency under State law in the same manner and to the same extent as such a health maintenance organization.

(4) Part A or Part B of the Medicare program under title XVIII of the Social Security Act.

(5) The Medicaid program under title XIX of the Social Security Act.

(6) A Medicare supplemental policy (as defined in section 1882(g)(1) of the Social Security Act).

(7) A long-term care policy, including a nursing home fixed-indemnity policy.

(8) An employee welfare benefit plan or any other arrangement that is established or maintained for the purpose of offering or providing health benefits to the employees of two or more employers.

(9) The health care program for active military personnel under title 10 of the United States Code.

(10) The veterans health care program under 38 U.S.C., chapter 17.

(11) The Civilian Health and Medical Program of the Uniformed Services (CHAMPUS), as defined in 10 U.S.C. 1072(4).

(12) The Indian Health Service program under the Indian Health Care Improvement Act (25 U.S.C. 1601 *et seq.*).

(13) The Federal Employees Health Benefits Program under 5 U.S.C. chapter 89.

(14) Any other individual or group health plan, or combination thereof, that provides or pays for the cost of medical care.

Medical care means the diagnosis, cure, mitigation, treatment, or prevention of disease, or amounts paid for the purpose of affecting any body structure or function of the body; amounts paid for transportation primarily for and essential to these items; and amounts paid for insurance covering the items and the

transportation specified in this definition.

Participant means any employee or former employee of an employer, or any member or former member of an employee organization, who is or may become eligible to receive a benefit of any type from an employee benefit plan that covers employees of that employer or members of such an organization, or whose beneficiaries may be eligible to receive any of these benefits. ''Employee'' includes an individual who is treated as an employee under section 401(c)(1) of the Internal Revenue Code of 1986 (26 U.S.C. 401(c)(1)).

Small health plan means a group health plan or individual health plan with fewer than 50 participants.

Standard means a set of rules for a set of codes, data elements, transactions, or identifiers promulgated either by an organization accredited by the American National Standards Institute or HHS for the electronic transmission of health information.

Transaction means the exchange of information between two parties to carry out financial and administrative activities related to health care. It includes the following:

(1) Health claims or equivalent encounter information.
(2) Health care payment and remittance advice.
(3) Coordination of benefits.
(4) Health claims status.
(5) Enrollment and disenrollment in a health plan.
(6) Eligibility for a health plan.
(7) Health plan premium payments.
(8) Referral certification and authorization.
(9) First report of injury.
(10) Health claims attachments.
(11) Other transactions as the Secretary may prescribe by regulation.

§ 142.104 General requirements for health plans.

If a person conducts a transaction (as defined in § 142.103) with a health plan as a standard transaction, the following apply:

(a) The health plan may not refuse to conduct the transaction as a standard transaction.

(b) The health plan may not delay the transaction or otherwise adversely affect, or attempt to adversely affect, the person or the transaction on the ground that the transaction is a standard transaction.

(c) The health information transmitted and received in connection with the transaction must be in the form of standard data elements of health information.

(d) A health plan that conducts transactions through an agent must assure that the agent meets all the requirements of this part that apply to the health plan.

§ 142.105 Compliance using a health care clearinghouse.

(a) Any person or other entity subject to the requirements of this part may meet the requirements to accept and transmit standard transactions by either—

(1) Transmitting and receiving standard data elements, or

(2) Submitting nonstandard data elements to a health care clearinghouse for processing into standard data elements and transmission by the health care clearinghouse and receiving standard data elements through the health care clearinghouse.

(b) The transmission, under contract, of nonstandard data elements between a health plan or a health care provider and its agent health care clearinghouse is not a violation of the requirements of this part.

§ 142.106 Effective date of a modification to a standard or implementation specification.

HHS may modify a standard or implementation specification after the first year in which HHS requires the standard or implementation specification to be used, but not more frequently than once every 12 months. If HHS adopts a modification to a standard or implementation specification, the implementation date of the modified standard or implementation specification may be no earlier than 180 days following the adoption of the modification. HHS determines the actual date, taking into account the time needed to comply due to the nature and extent of the modification. HHS may extend the time for compliance for small health plans.

Subpart B–C—[Reserved]

Subpart D—National Provider Identifier Standard

§ 142.402 National provider identifier standard.

(a) The provider identifier standard that must be used under this subpart is the national provider identifier, which is supported by the Health Care Financing Administration. The national provider identifier is an 8-position alphanumeric identifier, which includes as the eighth position a check digit.

(b) The file containing identifying information for each health care provider for its national provider identifier includes the following information:

(1) The national provider identifier.

(2) Other identifiers, such as the social security number (optional), employer identification number for some provider types, and identifying numbers from other health programs, if applicable.

(3) Provider names.

(4) Addresses and associated practice location codes.

(5) Demographics (date of birth, State/country of birth, date of death if applicable, race (optional), sex).

(6) Provider type(s), classification(s), area(s) of specialization.

(7) Education for certain provider types, State licensure for certain provider types (optional), and board certification (optional for some classifications).

§ 142.404 Requirements: Health plans.

Each health plan must accept and transmit the national provider identifier of any health care provider that must be identified by the national provider identifier in any standard transaction.

§ 142.406 Requirements: Health care clearinghouses.

Each health care clearinghouse must use the national provider identifier of any health care provider that must be identified by the national provider identifier in any standard transaction.

§ 142.408 Requirements: Health care providers.

(a) Each health care provider must obtain, by application if necessary, a national provider identifier.

(b) Each health care provider must accept and transmit national provider identifiers wherever required on all transactions it accepts or transmits electronically.

(c) Each health care provider must communicate any changes to the data elements in its file in the national provider system to an enumerator of national provider identifiers within 60 days of the change.

(d) Each health care provider may receive and use only one national provider identifier. Upon dissolution of a health care provider that is a corporation or a partnership, or upon the death of a health care provider who is an individual, the national provider identifier is inactivated.

§ 142.410 Effective dates of the initial implementation of the national provider identifier standard.

(a) *Health plans.* (1) Each health plan that is not a small health plan must comply with the requirements of §§ 142.104 and 142.404 by (24 months after the effective date of the final rule in the **Federal Register**).

(2) Each small health plan must comply with the requirements of

§§ 142.104 and 142.404 by (36 months after the effective date of the final rule in the **Federal Register**).

(b) *Health care clearinghouses and health care providers.* Each health care clearinghouse and health care provider must begin using the standard specified in § 142.402 by (24 months after the effective date of the final rule in the **Federal Register**).

Authority: Sections 1173 and 1175 of the Social Security Act (42 U.S.C. 1320d–2 and 1320d–4).

Dated: March 27, 1998.

Donna E. Shalala,

Secretary.

[FR Doc. 98–11692 Filed 5–1–98; 9:05 am]

BILLING CODE 4120–01–P

federal register

Thursday
May 7, 1998

Part III

Department of Health and Human Services

Health Care Financing Administration

42 CFR Part 422

Medicare Program: Waiver Requirements and Solvency Standards for Provider-Sponsored Organizations; Final Rule

DEPARTMENT OF HEALTH AND HUMAN SERVICES

Health Care Financing Administration

42 CFR Part 422

[HCFA–1011–IFC]

RIN 0938–AI83

Medicare Program; Waiver Requirements and Solvency Standards for Provider-Sponsored Organizations

AGENCY: Health Care Financing Administration (HCFA), HHS.

ACTION: Interim final rule with comment period.

SUMMARY: This interim final rule with a request for comments implements authority to waive, in the case of provider-sponsored organizations (PSOs) that meet certain criteria, the requirement that Medicare+Choice organizations be licensed by a State as risk-bearing entities. The waivers will be approved only under certain conditions where the State has denied or failed to act on an application for licensure.

This rule also establishes solvency standards that certain entities must meet to contract as PSOs under the new Medicare+Choice program. These standards apply to PSOs that have received a waiver of the requirement that Medicare+Choice organizations be licensed by a State as risk-bearing entities.

DATES: *Effective date:* These regulations are effective on June 8, 1998.

Comment date: Comments will be considered if we receive them at the appropriate address, as provided below, by 5 p.m. on July 6, 1998.

ADDRESSES: Mail an original and 3 copies of written comments to the following address: Health Care Financing Administration, Department of Health and Human Services, *Attention:* HCFA–1011–IFC, P.O. Box 26688, Baltimore, MD 21207–5187.

If you prefer, you may deliver an original and 3 copies of your written comments to one of the following addresses:

Room 309–G, Hubert H. Humphrey Building, 200 Independence Avenue, SW., Washington, DC 20201, or

Room C5–09–26, 7500 Security Boulevard, Baltimore, MD 21244–1850.

Because of staffing and resource limitations, we cannot accept comments by facsimile (FAX) transmission. In commenting, please refer to file code HCFA–1011–IFC. Comments received timely will be available for public inspection as they are received, generally beginning approximately 3 weeks after publication of a document, in Room 309–G of the Department's offices at 200 Independence Avenue, SW., Washington, DC, on Monday through Friday of each week from 8:30 a.m. to 5 p.m. (phone: (202) 690–7890).

If you wish to submit comments on the information collection requirements contained in this interim final rule, you may submit comments to:

Health Care Financing Administration, Office of Information Services, Information Technology Investment Management Group, Division of HCFA Enterprise Standards, Room C2–26–17, 7500 Security Boulevard, Baltimore, MD 21244–1850, *Attn:* John Burke, HCFA–1011–IFC

Office of Management and Budget, Room 10235, New Executive Office Building, Washington, DC 20503, *Attn:* Allison Herron Eydt, HCFA Desk Officer

FOR FURTHER INFORMATION CONTACT:

Aaron Brown, (410) 786–1033—general policy

Maureen Miller, (410) 786–1097—general policy

Philip Doer (410) 786–1059—program operations

Greg Snyder, (410) 786–0329—program operations

SUPPLEMENTARY INFORMATION:

I. Background

A. Current Medicare Contracting Program

Sections 1876 (g)(1) and (h)(1) of the Social Security Act (the Act) authorize the Secretary to enter into risk-sharing and cost contracts with eligible organizations to provide certain health benefits to members. Section 1876(b) of the Act requires an eligible organization, that may be a health maintenance organization (HMO) or a competitive medical plan (CMP), to be organized under the laws of a State. Additionally, section 1876(b) requires that such entities assume full financial risk on a prospective basis for the provision of health care services, and make adequate provisions against the risk of insolvency.

B. Current Regulations

Regulations at title 42 of the Code of Federal Regulations (CFR), Part 417, reflect the above requirement that Medicare contracting organizations be organized under State law, and make adequate provision against the risk of insolvency. Specifically, regulations at 42 CFR 417.120 require that Medicare contracting HMOs and CMPs have a fiscally sound operation as demonstrated by the following:

- Total assets greater than total unsubordinated liabilities.
- Sufficient cash flow and adequate liquidity to meet obligations as they become due.
- A net operating surplus or a financial plan.
- An insolvency protection plan.
- A fidelity bond or bonds, procured and maintained by the HMO, in an amount fixed by its policy-making body but not less than $100,000 per individual, covering each officer and employee entrusted with handling of its funds. The bond may have reasonable deductibles based upon the financial strength of the HMO.
- Insurance policies or other arrangements, secured and maintained by the HMO and approved by HCFA to insure the HMO against losses arising from professional liability claims, fire, theft, fraud, embezzlement and other casualty risks.

Since section 1876 of the Act requires that Medicare contracting HMOs and CMPs be organized under the laws of any State, these entities are subject to State laws regarding financial solvency. Many States follow the financial solvency provisions of the HMO Model Act of the National Association of Insurance Commissioners (NAIC). The financial requirements of the Model HMO Act are distinct from those of the Health Care Financing Administration (HCFA).

C. Balanced Budget Act of 1997

Section 4001 of the Balanced Budget Act of 1997 (BBA) (Public Law 105–33), enacted August 5, 1997, added new sections 1851 through 1859 to the Act. Those sections establish a new Medicare+Choice (M+C) program under part C of title XVIII of the Act. Part C is designed to give beneficiaries access to health plan choices that go beyond the original Medicare fee-for-service program and existing Medicare HMOs. Once the M+C program is implemented, an individual entitled to Medicare Part A and Part B will be able to elect benefits either through original Medicare or an M+C plan, depending on availability in their area. Under Part C, the M+C plans that may be offered are coordinated care plans (e.g., HMOs, provider-sponsored organizations (PSOs), and preferred provider organizations (referred to as PPOs)), private-fee-for service plans, and demonstration medical savings account (MSA) plans (that is, a combination of a high deductible, catastrophic insurance plan with a contribution to a Medicare+Choice account).

Regulations for the overall implementation of the M+C program are required by the BBA to be published by June 1, 1998. Those regulations will be incorporated into Part 422 of title 42 of the CFR. Provisions enacted by the BBA and the forthcoming M+C regulations establish broad and comprehensive requirements for contracting as an M+C plan, including basic benefits, payment, access to service, quality assurance, beneficiary hold harmless, continuation of benefits, appeals mechanisms, marketing and enrollment processes. Those overall M+C regulations will apply to PSOs as well.

Section 1851(a)(2) of the Act explicitly provides for participation of a PSO in the M+C program as a coordinated care plan. A PSO is described in section 1855(d) of the Act as a public or private entity—

- That is established or organized, and operated, by a health care provider or group of affiliated health care providers;
- That provides a substantial proportion of the health care items and services directly through the provider or affiliated group of providers; and
- With respect to which the affiliated providers share, directly or indirectly, substantial financial risk for the provision of such items and services and have at least a majority financial interest in the entity.

We recently published an interim final rule with an opportunity for public comment setting out this definition, clarifying certain terms, and establishing related requirements. (This PSO definitions rule established 42 CFR Part 422 and, more specifically, Subpart H, which is designated for the PSO provisions.) The terms and requirements related to the definition of a PSO are now found at §§ 422.350 through 422.356. Here, in this interim final rule with opportunity for public comment, we focus on two more portions of the law established specifically for PSOs and the M+C program: the Federal waiver of State licensure and the solvency standards that will apply to PSOs that have obtained such a waiver.

Section 1855(a)(2) of the Act establishes a special exception for PSOs to the otherwise applicable requirement for State licensure if certain conditions occur. This interim final rule implements the PSO waiver provisions specified in the BBA, and makes clarifications. In order to assist organizations that are considering applying to become PSOs under the M+C program, we determined that the waiver provisions should not be delayed until the June 1, 1998 regulation is published. As with the PSO definitions rule mentioned above, early publication of these PSO provisions is desirable because of requirements that must be met before contract application.

Section 1856(a) of the Act provides that the Secretary establish through a negotiated rulemaking process the solvency standards that entities will be required to meet if they obtain a waiver of the otherwise applicable requirement that they be licensed by a State. We note here that based on §§ 422.352(a) and 422.380, State-licensed organizations that meet the PSO definition (see §§ 422.350 through 356) may qualify for the minimum enrollment standards established under Section 1857(b) of the Act but are not subject to these solvency standards.

The solvency standards in this interim final rule with comment period are a product of the negotiated rule making process. This rule does not necessarily conclude the negotiated rulemaking process because the Committee may be reconvened to consider public comments that are received.

II. Waiver of State Licensure Requirement

A. Background

1. Statutory Basis

A fundamental requirement of the M+C program, as set forth under new section 1855(a)(1) of the Act, is that an M+C organization must be ''organized and licensed under State law as a risk-bearing entity eligible to offer health insurance or health benefits coverage in each State in which it offers an M+C plan.'' However, section 1855(a)(2) of the Act establishes an exception to this requirement by allowing certain organizations established or operated and controlled by providers, and known in the BBA as PSOs, to obtain from the Secretary a Federal waiver of the State licensure requirement under certain circumstances. This interim final rule with comment sets forth regulations for implementing that waiver.

Unlike the regulations contained in this rule relating to PSO solvency and capital adequacy, the waiver provisions were not developed through the negotiated rulemaking process. The regulations described in this section were developed by HCFA under its rulemaking authority.

2. State Licensure and the Medicare Program

Under section 1876(b) of the Act and implementing regulations at 42 CFR Part 417, Medicare contracting HMOs and CMPs must be organized under the laws of a State. As used in section 1876 of the Act, the term ''HMO'' means a Federally qualified HMO and the term ''CMP'' means a prepaid health plan that is likely regulated by the State as an HMO, but is not Federally qualified. Thus a provider sponsored health plan could apply to contract with HCFA as an HMO or a CMP if it became Federally qualified or met the definition of CMP, and satisfied other section 1876 requirements. In recent years, several States have adopted licensure laws for PSOs (sometimes known as integrated or organized delivery systems), thereby creating another licensure vehicle and avenue for contracting with Medicare. (Some State PSO laws, however, are limited in scope and licensed entities would not meet the CMP requirements).

3. Federal Waivers and PSO Applications

As indicated above, section 1855(a)(1) requires that M+C organizations be licensed as risk-bearing entities under the laws of the State. Section 1855(a)(2) of the Act provides an exception to this requirement for PSOs. PSOs are the only organization eligible to participate in M+C without State licensure. It is clear from the statute, however, that all organizations, including those established by providers, must seek State licensure as the initial step toward an M+C contract. Only under specific conditions, as described below, will the organization be permitted to forego the preliminary and fundamental requirement to be State-licensed as a risk-bearing entity.

If an organization believes that the circumstances of its State application comply with one of the conditions for a waiver, it must submit to HCFA a completed waiver request form. The request form, that the Office of Management and Budget approved on April 2, 1998, (form #0938–0722) is available through HCFA, and is posted on the HCFA web site at http://www.hcfa.gov/Medicare/mplusc.htm. HCFA will make a determination to approve or disapprove a waiver within 60 days of receipt of a substantially complete request. If the waiver request is approved, the organization will be considered eligible for a waiver, and then may submit its contract application to HCFA. (The PSO application form will be posted at the aforementioned Internet address in the near future.) It is through the application process that the organization must demonstrate to HCFA's satisfaction that it meets the PSO definitions and requirements as set forth in 42 CFR 422.350 through 422.356, as well as the solvency standards established later in this interim final rule. If it meets the

definition, the organization will be considered a PSO and remains eligible for a waiver.

Given the 60-day time period permitted HCFA to approve a waiver request under section 1855(a)(2)(F) of the Act, we felt it would be impossible in many cases to simultaneously process the waiver request and determine whether an organization is a PSO as defined under § 422.350 through § 422.356. This determination may require an extensive review and verification of the organization's structure, ownership or partnership arrangements, contracts and payment arrangements. Therefore, as described above, the 60-day maximum time period will apply to determining whether the organization is eligible for a waiver, as required by law. The determination that the organization is in fact a PSO will occur once it is eligible for a waiver and has submitted an application for an M+C contract.

B. Waiver Provisions

In this interim final rule, we are establishing new provisions at § 422.370 through § 422.378 for purposes of implementing section 1855(a)(2) of the Act. Because entities applying for a waiver as yet will not have been determined to meet the PSO definition and requirements of subpart H, the regulation text refers to these entities as ''organizations.''

Section 422.370 implements the authority under section 1855(a)(2)(A) of the Act to waive the State licensure requirement for M+C organizations contained in section 1855(a)(1) and restates the two basic conditions for doing this. First, the rule requires organizations interested in a waiver to file a request by no later than November 1, 2002, a time limit specified by the statute. Second, HCFA must determine whether the organization meets one of the grounds for a waiver listed in § 422.372.

Section 422.372 of the rule establishes the basis for a waiver as set forth in sections 1855(a)(2)(B), (C), and (D) of the Act. These three conditions and a fourth condition identified by HCFA are described below. In order for three of the conditions to be effectuated, the organization must have applied for a State license before requesting a waiver. By requiring that the organization apply for ''the most closely appropriate'' license (or authority), we are clarifying that the type of license must relate to the nature of M+C coordinated care plans; that is, health plans providing coordinated, comprehensive benefits through a health care delivery net work on a fixed, prepayment basis. We are requiring this to ensure that organizations requesting and obtaining waivers will likely meet the PSO definition and M+C requirements during the application stage. We expect that for most States the most appropriate license available will be an HMO license, although this may change as States adopt PSO or modify current licensure laws. It is very unlikely that we will approve a PSO waiver based on an application for an indemnity insurance license, a PPO license, any license or authority to provide limited health services, or a limited license to bear risk for an HMO as a downstream contractor.

Section 422.372(a) sets out the first basis on which an organization may establish waiver eligibility, that is, the State failed to complete action on the licensing application within 90 days of the date the State received a substantially complete application. (See section 1855(a)(2)(B).) The 90-day period may begin any time after enactment of the BBA. It is counted from the date the State received a ''substantially complete application.'' In order to clarify the term ''substantially complete application,'' we consulted several parties for technical assistance, and intend to make determinations as follows:

(1) If the State has notified the organization, in writing, that the organization has submitted a substantially complete application, the date of that notification will be considered the date the State received a substantially complete application.

(2) If the State has not notified the organization, in writing, as to the completeness of its application within 60 days of the date of submission of an application, we will consider the date the organization submitted its initial application to be the date the State received a substantially complete application.

(3) If the organization can demonstrate to HCFA that it has submitted all of the information requested in an incompleteness notification from the State and the State still regards the application as incomplete or fails to notify the organization as to the status of its application within 30 days from the date it receives the organization's submission of the additional information requested, then HCFA will consider the date the State received the additional information requested to be the date the State received a substantially complete application.

(4) In a dispute between an organization and the State over whether the organization has submitted a substantially complete application or over the date the State received a substantially complete application, HCFA will make the final determination based on consultation with the organization and the State.

We believe that this process for determining the date the State received a substantially complete application is consistent with Congressional intent that an organization must make an earnest attempt to become State licensed before requesting a waiver. This earnest attempt includes working with the State in good faith to submit all of the information necessary to have a license either approved or denied. At the same time, however, we also believe that State licensing agencies should be working in good faith with the organization to either approve or deny an application in a timely manner.

We believe the process outlined above balances the concerns of the States and of the organization. However, given the complexity of implementing this provision, we invite comment on this approach.

Paragraph (b) of § 422.372 establishes the second basis for a waiver. Here, waiver eligibility results from the organization experiencing discriminatory treatment in the State's denial of its application. As provided in the statute, discriminatory treatment can occur in two ways, as follows:

- The State has denied the licensure application on the basis of any material requirements, procedures or standards (other than solvency requirements) that the State does not generally apply to other entities engaged in a substantially similar business.
- The State required, as a condition of licensure, that the organization offer any product or plan other than an M+C plan.

Thus, an organization will be eligible for a waiver under this provision if the State imposes different requirements, and these different requirements are the basis of a license denial. In addition, the organization must demonstrate what requirement, procedure, or standard it failed to meet, and how this differs from what is generally applied to other similar plans. In order to demonstrate that the State does not ''generally apply'' the requirement on which the denial was made, the organization must show that the requirement is more of an exception and not usually applied to similar health plans. For example, if a pattern exists where most HMOs within a State are not held to a requirement, the PSO will be eligible for a waiver based on discriminatory treatment.

By ''substantially similar business'' we mean entities that provide and manage a comprehensive set of health

care services, and are prepaid a fixed amount in advance and without regard to the frequency or cost of services when utilized. Such entities are likely to include HMOs, and may include certain PPOs and State-licensed PSOs. We do not anticipate considering indemnity insurers, PPOs reimbursed on a discounted fee-for-service basis, or ''single-service'' managed care plans as being engaged in a ''substantially similar business'' to the waiver-requesting organization.

We considered a broader use of the term ''engaged in a substantially similar business'', but believe our interpretation is consistent with the PSO provisions in section 1855 of the Act. We believe an expanded interpretation, which includes all risk-bearing entities (for example, indemnity insurers) does not comply with the language of the statute. In processing waiver requests under this provision at this time, we anticipate looking to the requirements, procedures and standards that a State places on HMOs.

The second criterion for discriminatory treatment, set forth in § 422.372(b)(2), is that the State requires the organization to offer its health plan to other than the Medicare population. Here, an organization would have to demonstrate only that it was denied a license because the health plan would serve only Medicare beneficiaries. We believe this provision permits the establishment of Medicare-only PSOs, and establishes a Federal preemption over any State laws that would prevent it.

Paragraph (c) of § 422.372, the third basis for approving a waiver of the State licensure requirement, pertains to a State imposing different requirements related to financial solvency. Two conditions, or criteria are specifically addressed in this paragraph. (See 1855(a)(2)(D)(i) and (ii).) Under § 422.372(c)(1), a waiver may be granted if the State has denied the licensure application, in whole or in part, based on the organization's failure to meet solvency requirements that are different from those set forth in §§ 422.380 through 422.390. This provision incorporates the new regulatory citation for PSO solvency standards developed through negotiated rulemaking as established in this rule.

An issue arose regarding waiver eligibility when a State has adopted the Medicare PSO solvency standards and denies a license based solely on a provision of the solvency standards that give the regulator discretion. For example, it is likely that while using the same solvency standards, HCFA and States could reach different decisions regarding the acceptance of administrative infrastructure to reduce the minimum net worth amount requirement. If a State does not permit such a reduction, the issue arose whether HCFA would consider this a basis for a waiver. We have decided to permit requests for waivers in these situations. As documentation, we will require organizations to submit all information relevant to the specific solvency requirement in question, including any State correspondence. As part of our review, we will likely seek input from the State. If we concur with the State's determination regarding the specific discretionary issue, the waiver request will be denied. However, if we make a decision, that differs from the State's, then the waiver will be approved and the organization may submit an M+C application. We considered acceding to States' decisions where a regulator's discretion is warranted under the PSO solvency rules, but concluded that this might overly restrict the availability of waivers.

The second condition, for a waiver under § 422.372(c) is that the State has imposed documentation or information requirements, or other requirements, procedures or standards related to solvency or other material requirements that are different from those imposed by HCFA in carrying out §§ 422.380 through 422.390. As with the previous condition, we believe that a PSO may seek a waiver if a State denies a license based on its exercise of discretion in requiring different information or documentation than HCFA. Therefore, documentation, information, and other requirements which may stem from such discretion can be the sole basis for granting a waiver under this particular provision. Our position on this issue is based upon the intent of the Congress, as reflected in the Conference Report accompanying the BBA, that the State not impose documentation or information requirements ''that are dilatory or unduly burdensome and that are not generally applied to other entities engaged in a substantially similar business.'' (H.R. Rep. No.105–217, 105th Congress, Session 632 (1997))

The fourth basis for approving a waiver of the State licensure requirement, paragraph (d) of § 422.372, is that the appropriate State licensing authority has notified the organization in writing that it will not accept their licensure application. While this grounds for approval is not in the Act, we are using our authority under section 1856(b)(1) to establish standards to add this provision based on concerns that the Act allows for a waiver only if the PSO submits an application to the State. We have identified a concern that some State agencies may refuse to accept licensing applications from PSO-like organizations, thus preventing these organizations from requesting a waiver until 90 days have transpired.

We believe this provision facilitates the waiver process and conforms with the intent of section 1855(a)(2) of the Act. If it is clear that a State licensing agency will not act on an application as described here, both the State and the organization can save time and resources by permitting the organization to go directly to HCFA for a waiver.

In § 422.374 we clarify certain conditions and provisions related to the waiver request and approval process. Paragraph (a) clarifies section 1855(a)(2)(f) of the Act, which requires organizations seeking a waiver to submit a substantially complete waiver request. Section 422.374(a) specifies that to be substantially complete, a request must clearly demonstrate and document the organization's eligibility for a waiver. HCFA will notify the organization if the request is not complete, and will work with the organization to determine the information necessary to make a decision on the request. HCFA will have final discretion in determining whether a waiver request is substantially complete.

Paragraphs (b) and (c) of § 422.374 provide that HCFA will act promptly (within 60 days) to grant or deny a substantially complete waiver request and allow organizations that have been denied a waiver request to submit subsequent requests until November 1, 2002. (See section 1855(a)(2)(F).)

Paragraph (d) of § 422.374 establishes that the waiver will take effect upon the effective date of the M+C contract. We have added this provision to clarify that a waiver is linked to the contract and is not active, or operable, without an effective M+C contract. This provision helps organizations seeking a waiver, because the waiver is limited to a one-time, three-year period. If the waiver is made effective immediately upon approval of a waiver request and the approval of the M+C contract takes longer than anticipated, the three-year waiver period would be running and the organization could lose a significant amount of time that it is eligible to operate without a State license. If the contract application is denied, an even greater amount of time may elapse by the time the organization can develop, submit and gain approval of a revised contract application.

Paragraph (e) of § 422.374 gives HCFA the right to revoke a waiver if we

subsequently find that the organization's M+C application is significantly different from the application submitted to the State. Because Congress intended for organizations to make an earnest attempt to obtain a State license before applying for a Federal waiver, we believe that significant changes from the State application to the M+C waiver application could undermine this policy. We believe that requiring that the M+C contract application be very similar to the application submitted for a State license addresses two possible situations. First, it prevents organizations from circumventing the intent for them to achieve State licensure if possible. It also assures States the right to license an organization that has evolved or reorganized from the time of its first application; that is, the organization has undergone some significant changes and the application for all intent and purposes is ''new.''

Organizations that reapply for an M+C contract because they were not successful M+C applicants do not have to reapply to the State or re-submit a waiver request as long as the revised application does not invoke paragraph (e) of § 422.374.

Section 422.376 is added to establish parameters of the waiver. Paragraph (a) of this section restates section 1855(a)(2)(E)(i) of the Act, the waiver is effective only for the particular State for which it is granted and does not apply to any other State. It also clarifies that an organization must be licensed or request and gain waiver approval for each State where it wishes to operate an M+C plan.

Paragraph (b) of § 422.376 incorporates section 1855(a)(2)(E)(ii) of the Act by limiting the waiver to a 36-month period. We have modified this provision, however, to extend the period through the end of the calendar year in which the 36-month period ends unless the waiver is revoked based on paragraph (c) of this section. We made this modification because we were concerned about terminating the waiver and the M+C contract during the middle of a contract year. Such mid-year terminations are unreasonable, disruptive, costly, and could unnecessarily jeopardize the health care of beneficiaries enrolled in a PSO. By waiting until the end of the contract year to end a waiver (and thus the M+C contract), beneficiaries will be able to transition into other M+C plans through the annual enrollment process.

Paragraph (c) of § 422.376, mid-period revocation, was added to clarify that the waiver will cease before the end of the 36 month period if the organization's M+C contract is terminated or if the organization becomes State licensed. This provision emphasizes again the relationship between the waiver and the contract; namely that the waiver is not effective without a contract in effect, and the contract cannot be effective without the waiver. It also restates the Act by conditioning the waiver upon the organization's compliance with State consumer protection and quality standards as discussed further below.

The last section of the waiver provisions, § 422.378, addresses the relationship between State law and waivered organizations, or PSOs. These provisions are a codification of sections 1855(a)(2)(E)(iii) and (iv), and 1855(a)(2)(G) of the Act. Section 422.378(a) establishes a general Federal preemption of any State law related to licensing the organization that interferes with contracting under the M+C program. Section 422.378(b), on the other hand, establishes the State's right to require waivered organizations to comply with consumer protection and quality standards applicable to all other M+C plans in the State, as long as the standards are consistent with Medicare requirements. Paragraphs (c) and (d) of § 422.378 establish processes for ensuring compliance with § 422.378(b). We are developing a memorandum of understanding with the NAIC to implement §§ 422.378 (b), (c) and (d).

III. PSO Solvency Standards

A. Background

1. Negotiated Rulemaking Act

The Negotiated Rulemaking Act (Pub. L. 101–648), establishes a framework for the conduct of negotiated rulemaking. Negotiated rulemaking is a process whereby a rule (generally a proposed rule) is developed by a committee of representatives of interests that are likely to be significantly affected under the rule and includes a Federal government representative. The goal of the process is to reach consensus on the text or content of the rule and then publish that text for public comment. Consensus is defined in the Negotiated Rulemaking Act as unanimous concurrence among the interests represented. However, the committee could agree on another specified definition. The committee is assisted by a neutral facilitator.

The agency responsible for the rule may use the services of an impartial convener to identify potential participants in the negotiation, determine whether they are willing to participate, inform them about the process, discuss issues with potential participants, and make recommendations regarding how to make the process work. The committee must be chartered under the Federal Advisory Committee Act (FACA) (5 U.S.C. App.2).

2. Establishing the Process

To expedite the development of PSO solvency standards, Congress modified the negotiated rulemaking process by requiring that this rule be published as an interim final rule with comment, shortening the period for forming the committee, establishing a shortened period for committee negotiations, and setting a target date for publication of the interim final rule for April 1, 1998. (See section 1856(a) of the Act.)

We selected the Department of Health and Human Services Departmental Appeals Board (DAB) to serve as the convener and facilitator for these negotiations because of their reputation for impartiality, as well as their experience and availability. The DAB has familiarity with HHS programs and experience convening and facilitating negotiated rulemaking on Medicare issues such as the Medicare Hospice Wage Index and the Shared-risk Exemption to Federal Health Care Anti-Kickback Provisions. Further, a poll of parties interested in the development of PSO solvency standards indicated unanimous support for using the DAB to facilitate the negotiated rulemaking.

During the convening process, the DAB interviewed over 50 individuals from outside the Federal government, representing over 25 different associations, coalitions or companies. On September 8, 1997, the DAB issued a convening report recommending participants for the negotiated rulemaking committee (the Committee). This recommendation was based on an evaluation of the potential effects of the rule on groups that indicated a desire to serve on the Committee. When any differences among groups were identified, the convener sought information about how these differences were relevant with respect to solvency standards, whether those differences could be adequately represented by other groups, and whether there had been demonstrated concern about solvency standards during the legislative debate. The report also identified issues to be negotiated and potential barriers to consensus.

On September 23, 1997, we published in the **Federal Register** (62 FR 49649) a notice of intent to form a negotiated rulemaking committee and notice of meetings. Based on the recommendations contained in the convener's report, the notice appointed

representatives of interests likely to be affected by PSO solvency standards to the negotiated rulemaking Committee. Committee members included the—

American Association of Health Plans,
American Association of Retired Persons,
American Hospital Association,
American Medical Association,
American Medical Group Association,
Blue Cross/Blue Shield Association,
Consortium on Citizens with Disabilities,
Federation of American Health Systems,
Health Insurance Association of America,
National Association of Insurance Commissioners,
National Rural Health Association
Coalition of the Catholic Hospital Association and Premier Health Care
Coalition of the American Association of Homes and Services for the Aging, the American Health Care Association, the Home Health Services and Staffing Association, and the National Association for Home Care; and
Coalition of the Independent Practice Association of America and the National Independent Practice Association.

In addition the Committee included a representative from HCFA.

We requested public comment on whether we had identified the key solvency issues to be negotiated by the Committee; if we had identified the interests that will be affected by key issues listed; and whether the party we were proposing to serve as the neutral facilitator was acceptable. We also sought comments on several key definitions related to the negotiated rulemaking and the forthcoming rulemaking for Medicare+Choice organizations. In general, commenters supported the notice and as a result no changes were made to the Committee membership or issues to be discussed.

3. Summary of the Committee Process

The Committee met seven times from October 1997 to March 1998. Notices of meetings were published in the **Federal Register** on September 23, 1997 (62 FR 49649) and February 13, 1998 (63 FR 7359). Minutes for each of these meetings are posted on the M+C web page at http://www.hcfa.gov/Medicare/mplusc.htm. At the first meeting, held October 20, 21, and 22, 1997, business and health industry analysts made presentations that related to health plan solvency. Also the Committee discussed how to address the principle solvency issues and how to proceed in developing solvency standards. The Committee devoted the remaining series of 3-day meetings, and a final 1-day meeting, primarily to substantive discussion of solvency standards for Federally waived PSOs.

The Committee's deliberations focused on the following issues: the stages at which to evaluate a PSO's financial solvency, the amount, composition, and location of assets and liabilities that PSOs must maintain to be considered financially solvent; the planning and data collection necessary to track PSO solvency; and the mechanisms needed to protect beneficiaries if a PSO becomes insolvent.

On March 5, 1998, the Committee reached consensus on a PSO solvency standards proposal. All Committee members signed an agreement indicating unanimous concurrence with a written Committee statement of the Committee's recommendations for PSO solvency standards.

In the agreement, HCFA agreed that, to the maximum extent possible and consistent with legal obligations, it will draft an interim final rule consistent with the Committee statement. We believe that the PSO solvency provisions of the interim final rule published herein are fully consistent with the Committee's recommendations, with some additional clarifications. Committee members have agreed not to submit negative comments on the interim final rule. If, however, a member believes any provision of this rule incorrectly reflects the Committee statement, the member may comment on the matter. If necessary, the Committee will be reconvened at a later date.

4. Summary of the Committee's Deliberations

The Committee agreed that there are three stages at which to consider solvency standards: initially at start-up, as an ongoing business operation, and during insolvency. While these stages are only concepts that do not have exact starting or finishing points, the Committee felt that they are a useful framework for setting solvency standards at different stages of operation. These stages are translated in regulation to the application stage, the stage during which the M+C contract is in effect, and insolvency.

The initial stage represents the period of activity prior to the first day of actual operation as an M+C contracting PSO. It includes the periods when an organization will request a Federal waiver of State licensure and will apply for an M+C contract. In this preamble and the regulation, the term PSO is reserved for organizations that are: approved for a Federal waiver, determined to meet the definition and related requirements of a PSO, and awarded a Medicare+Choice contract.

The ongoing stage represents the period that begins when a PSO's M+C contract becomes effective. This is when a PSO will assume responsibility for providing services to Medicare beneficiaries for a fixed payment. During this stage, the appropriate solvency standards are affected by the number of Medicare enrollees for which a PSO is responsible. Lastly, the insolvent stage represents the period beginning when a PSO's total liabilities exceed its total assets.

Using this three stage framework, the Committee developed alternate proposals regarding the amount, composition, and status of assets and liabilities that PSOs must maintain in order to be considered fiscally sound and financially solvent. The alternate proposals reflected the various interests of the Committee members and their constituencies. These proposals formed the basis for negotiations and the subsequent Committee statement and consensus agreement.

To develop the solvency standards, the Committee considered what financial, capital and other factors must be present to assure that a PSO is fiscally sound. Specifically, the Committee considered requirements for net worth, financial plans, liquidity, financial indicators, and beneficiary protection.

B. Net Worth Amount Requirements

The Committee considered the net worth requirements for the initial and ongoing stages. In each stage, the Committee deliberated on the appropriate amount and composition of assets to be counted toward the net worth requirement. The Committee agreed that in the initial stage an organization should have an initial minimum net worth amount of $1,500,000. This is the same minimum net worth amount that is specified in the HMO Model Act, with a significant difference. The Committee agreed to allow HCFA to reduce the net worth requirement by up to $500,000 if the PSO has available to it an administrative infrastructure that HCFA considers appropriate to reduce, control or eliminate start-up costs associated with the administration of the organization. Such infrastructure would include office space and equipment, computer systems, software, management services contracts and personnel recruitment fees. In recognizing a reduction of up to $500,000 for these costs, the Committee acknowledged that the minimum net worth drops from $1,500,000 to $1,000,000 as soon as the PSO is approved and that the $500,000 difference was to account for start-up costs. HCFA has the discretion to approve the administrative costs that an organization offers to obtain a reduction of up to $500,000.

For the ongoing stage, the Committee agreed that the minimum net worth should be at least $1,000,000. This is the minimum specified in the HMO Model Act for the ongoing stage. The difference between the ongoing minimum net worth and the initial minimum net worth reflects the Committee belief that PSOs will incur administrative costs in the initial stage that will not be repeated in the ongoing stage. While the floor on the minimum net worth amount in the ongoing stage is $1,000,000, the Committee agreed to subject PSOs to a series of ''greater of'' tests to determine an appropriate minimum net worth. The ''greater of'' tests link the minimum net worth amount to the size of annual premium revenues, the amount of uncovered health care expenditures, and the amount of health care expenditures paid to non-capitated and non-affiliated providers. These factors are indirectly related to the size of the plan (that is, number of enrollees) and the amount of risk being assumed.

The Committee discussed whether to include, among the factors considered in setting the ongoing net worth amount for PSOs, the authorized control level (i.e., the point in a financial crisis where a State regulator is authorized to take control of an organization) capital requirement derived from the NAIC Health Care Organization Risk Based Capital (RBC) Formula. RBC is a new formula adopted by the NAIC to determine the minimum capital level that an organization should have before regulators become concerned about its solvency. The RBC level depends on the riskiness of the company's assets, investments, and products. RBC has several trigger points. As currently envisioned, if a company's actual net worth falls below the trigger point called the authorized control level, the State's insurance commissioner may take control of the company. The RBC for health organizations has not yet been adopted by States for setting minimum net worth requirements.

The RBC formula by design will be used by States to monitor the financial viability of State-regulated managed care plans. It has not yet been adopted by States in setting the minimum net worth amount requirements. The Committee agreed that HCFA should consider adding that RBC authorized control level factor to the ongoing net worth amount requirements after evaluating whether the RBC is a valid indicator of Medicare PSO solvency and after considering the manner in which States have regulated managed care plans using the RBC authorized control level. In 1999, after PSOs have begun to operate and report financial data, HCFA will issue a notice requesting comment on adding this factor to the net worth calculation for PSOs. As part of HCFA's normal data collection process for all M+C plans, HCFA expects to be collecting information necessary to perform the RBC calculations.

With regard to the composition of the minimum net worth amount, the Committee agreed upon the following requirements—

- At least $750,000 of the minimum net worth must be in cash or cash equivalents. After the effective date of the contract, however, the Committee agreed that $750,000 or 40 percent of the minimum net worth amount must be in cash or cash equivalents.
- Up to 10 percent of the minimum net worth amount can be comprised of intangible assets in the initial stage. However, in the initial stage, if a PSO keeps $1,000,000 in cash or cash equivalents and does not use the administrative reduction, then up to 20 percent of that PSO's minimum net worth can be comprised of intangible assets. In the ongoing stage, a PSO must keep the greater of $1,000,000 or 67 percent of the ongoing minimum net worth in cash or cash equivalents to qualify for the 20 percent level on intangibles.
- Subject to the above provisions, health care delivery assets (HCDAs) may be admitted at 100 percent of their value according to generally accepted accounting principles (GAAP).
- Subject to the above provisions, other assets may be admitted according to their value under Statutory Accounting Practices (SAP).
- Subordinated debts and subordinated liabilities can be excluded from the calculation of liabilities for the purposes of determining net worth.
- Deferred acquisition costs are excluded from the net worth calculation.

The Committee also agreed that HCFA will look at SAP codification upon its completion and will consider whether to adopt codification standards on the asset concentration and quality of HCDAs for waivered PSOs. SAP codification standards are currently being developed by the NAIC to make SAP more consistent among the States. HCFA will request public comment on whether to use any such standards in the notice on the NAIC RBC (see above). Meanwhile, HCFA may apply judgement in evaluating HCDAs for concentration and quality.

In the Committee's deliberations the concepts of net worth and liquidity were closely related. Some Committee members suggested that because PSOs have the potential to provide ''sweat equity,'' these organizations could operate under different solvency standards for net worth and liquidity than might be acceptable for other forms of integrated delivery systems. The term ''sweat equity'' was used to represent the value of health services that a PSO could provide directly. One premise presented to the Committee was that PSOs could continue to furnish services during financial crises because the ''owners'' actually provide health care services, whereas other managed care systems that contract for the delivery of care may not be able to continue to operate. In addition, PSOs could adopt contingent reimbursement arrangements with their providers. Under such arrangements, the affiliated providers' payments could be reduced until the PSO had weathered the financial crisis.

The consensus was not to explicitly recognize sweat equity in the solvency standards. This position evolved because of the difficulty in developing an administrable solvency standard based upon sweat equity. Further, the solvency standards implicitly recognize sweat equity in other areas (e.g., the financial plan).

C. Liquidity Requirements

In conjunction with a minimum net worth amount requirement, the Committee discussed a standard for meeting financial obligations on time. The Committee adopted, for both the initial and the ongoing stages, the liquidity standard that a PSO have sufficient cash flow to meet its obligations as they become due. Also, the Committee recommended that in the initial and ongoing stages HCFA should use the same factors to determine the ability of a PSO to meet the liquidity standard: (1) the timeliness of PSO payments of obligations, (2) the extent to which the current ratio is maintained at 1:1 or whether there is a change in the current ratio over a period of time, and (3) the availability to a PSO of outside financial resources to meet its obligations.

The current ratio focuses on a period that is up to one year long. It compares all assets that are convertible to cash within that period with all liabilities that will come due in that same period using the following formula:

$$\text{Current ratio} = \frac{\text{Current Assets}}{\text{Current Liabilities}}$$

The Committee agreed that PSOs should maintain a current ratio of at least 1:1. That is, current assets should be equal to or greater than current liabilities. The Committee also agreed that the current ratio is a target rather than an absolute standard. This position

recognizes that valid reasons may exist for a PSO's current ratio to go below 1:1 for short periods of time. However, there were also concerns by some Committee members that the current ratio is an important indicator of an organization's condition and a current ratio of under 1:1 should trigger some regulatory action. Therefore, the current ratio will be used to identify trends or sudden major shifts in a PSO's financial performance.

D. Financial Plan Requirements

Several presenters before the Committee identified poor planning and management control as the primary reasons for the early HMO failures. As a standard to encourage good planning and strong management, the Committee agreed that a financial plan is essential for PSOs. Further, such plans should be prospective, reasonable, and consistent. The Committee used the financial plan standard for contractors under section 1876 of the Act to develop the PSO standard, but specified certain provisions differently. The specific requirements of the financial plan are presented in the discussion of provisions, below.

The Committee believed that the financial plan standard they agreed to represents the minimum needed to monitor Federally waived PSOs. The Committee agreed that HCFA should have the discretion to modify the financial plan to require additional or different information as necessary to evaluate the financial position of a Federally waived PSO.

The Committee agreed that in the initial stage, at the time of application, organizations must submit financial plans covering the period from the most recent financial audit until 12 months after the effective date of an M+C contract. If, however, a financial plan projects losses, then the time horizon must extend further, to 12 months after the point that the financial plan projects two consecutive quarters of net operating surplus.

E. Pre-Funding of Projected Losses

One area of the financial plan that the Committee discussed considerably was a requirement that PSOs must identify all sources of funding for projected losses (and in certain circumstances actually have the cash available). A key issue in this discussion was if and how to recognize such financing methods as guarantees and letters of credit (LOC). Some Committee members expressed concern about quickly securing money that was pledged to a PSO in a guarantee or letter of credit during a financial crisis. For a PSO that is under financial strain, the timely availability of cash is crucial to both the PSO and HCFA in attempting to protect Medicare enrollees. A delay in securing needed cash—if, for example, the guarantor stalls or reneges on its obligation—could exacerbate a financial crisis and further threaten the quality and continuity of care for enrollees.

Other Committee members contended that guarantees and LOC are a common and accepted means of obtaining capital for integrated health delivery systems. Furthermore, many providers who are candidates to become Federally waived PSOs could not participate unless guarantees or LOC, or both, are allowed. Advocates of guarantees and LOC felt that they should be admitted for two purposes: meeting the net worth requirements and funding projected losses.

As a compromise, the Committee agreed to accept guarantees, but only for funding projected losses that are reported by a PSO in its financial plan. As previously mentioned, the solvency standards contained herein require PSOs to fund all projected losses in the financial plan from the effective date of their M+C contracts until they achieve two consecutive quarters of net operating surplus. The Committee agreed that guarantees are an acceptable means to fund projected losses provided certain conditions are met. Further, the Committee agreed that each PSO's guarantee would be subject to a trial period of one-year from the effective date of the PSO's M+C contract. During this period, guarantees would be accepted, but cash or cash equivalents equaling the obligations covered by the guarantee would have to be on a PSO's balance sheet six months prior to the date actually needed. After a year, assuming that the guarantee obligations are met timely, the Committee agreed that a PSO should be permitted to notify HCFA of its intent to reduce or eliminate the pre-funding period. The Committee further agreed that HCFA should have up to 60 days after the receipt of such notice to exercise its discretion and modify or reject the notice. However, if the guarantee obligations are not properly met on a timely basis, the Committee agreed that HCFA should have the discretion to require a PSO to fund projected losses through other methods or further in advance.

HCFA presented the Committee with draft standards on guarantees. The Committee generally supported the draft with some revisions, but did not officially adopt the standards as part of the Agreement before needing to vote on consensus.

The Committee agreed that it should recognize LOC as a means to fund projected losses. To be accepted, LOC must be irrevocable, clean, and unconditional. Additionally, LOCs must be capable of being promptly paid upon presentation of a sight draft under the LOC without further reference to any other agreement, document or entity. The Committee also agreed that beginning one year after the effective date of an M+C contract, a PSO should be allowed to use the following other means to fund projected losses: (1) lines of credit from regulated financial institutions, (2) legally binding capital contribution agreements, and (3) other legally binding contracts of similar reliability.

The Committee recognized that HCFA should have discretion regarding the acceptance of guarantees, LOCs and other means to fund projected losses. Accordingly, use of these vehicles is subject to an appropriateness standard. That is, guarantees, LOCs and other means of funding projected losses may only be used in a combination or sequence that HCFA determines is appropriate.

F. Reporting

The Committee agreed that PSOs must meet HCFA requirements for compiling, maintaining and reporting such financial information as the agency determine is necessary. HCFA should have the discretion to specify the contents, method of calculation, and the schedule for reporting such financial indicators. We believe that this discretion is necessary for proper oversight of Federally waived organizations as they evolve and as market conditions evolve. The Committee recommended that the general reporting format be the NAIC's Official Annual Statement Blank—HMO Edition (the Orange Blank). HCFA will modify data obtained from this form for application to PSOs. Use of this form will not prohibit HCFA from requesting additional information if the agency determines that such information is necessary to accurately assess a PSO's financial condition.

The Committee agreed that the common practice should be to require quarterly or annual reports. If a PSO has not achieved a net operating surplus, the Committee felt that HCFA could require financial reporting as frequently as monthly. Monthly reporting would be necessary to enable HCFA to maintain better oversight of PSOs that are at heightened financial risk.

G. Insolvency Protections

The Committee's deliberation in the area of insolvency focused upon protecting beneficiaries. The Committee considered five issues regarding insolvency: an insolvency deposit requirement, a hold harmless requirement, a continuation of coverage provision, reserves for uncovered expenditures, and termination of an M+C contract.

The Committee agreed that an insolvency deposit should be required. The insolvency deposit would be used to pay for the costs associated with receivership or liquidation. Committee discussions focused on the amount of the insolvency deposit rather than the need for a deposit. For the insolvency deposit requirement, the Committee considered a range between $100,000 and $300,000. Committee members supporting a $300,000 deposit contended that a lower deposit would be quickly exhausted and inadequate in a financial crisis. Committee members who supported the $100,000 deposit countered that a higher deposit would be too onerous when combined with the cash reserves required to meet the minimum net worth amount. The consensus position was to allow the lower insolvency deposit of $100,000, provided that the requirement for the cash portion of the minimum net worth amount be set at $750,000. Additionally, the Committee agreed that the insolvency deposit would be counted toward the minimum net worth requirement although not toward the $750,000 cash requirement.

With regard to uncovered expenditures, the Committee adopted the HMO Model Act standard. The Model Act requires that whenever uncovered expenditures exceed 10 percent of total health care expenditures, an entity must create a deposit equal to 120 percent of outstanding liabilities for uncovered expenditures. Rather than being available for a State insurance commissioner, the deposit would be restricted for HCFA's use in the event of an insolvency to pay claims and administration costs.

While the Committee discussed the issues of Federal bankruptcy/State receivership, hold harmless, and continuation of coverage, they concluded that these issues were beyond the scope of the negotiations. Further, Federal bankruptcy and State receivership matters are not within the purview of HCFA. The hold harmless and continuation of benefits provisions will be considered as part of the overall M+C regulation due to be published later this year.

H. Solvency Standards for Rural PSOs

In pre-consensus Committee discussion, there was vigorous discussion of separate solvency standards for rural PSOs. (See § 422.352(c) for a definition of rural PSO.) Some Committee members contended that rural providers would find it particularly difficult to meet the solvency standards, especially the cash requirements. Rural providers, as compared to their urban counterparts tend to have high portions of their assets concentrated in health care delivery assets and intangible assets. To rural PSOs, an excessive cash requirement may amount to an undue barrier to entry.

The Committee's consensus on this issue was to develop one solvency standard for all PSOs. The underlying premise was that the experience of an unexpected, major claim would harm rural PSOs more because rural PSOs tend to have smaller enrollments than urban PSOs, and therefore a smaller revenue base for absorbing sudden financial fluctuations. The Committee believed that financial instability in a rural PSO could be more easily triggered by lower solvency standards.

However, recognizing the unique needs of rural communities, the Committee directed HCFA to solicit public comment on the issue of separate solvency standards for rural PSOs. Thus, we are hereby seeking comments on this matter, particularly on the appropriateness of the net worth and liquidity requirements of this interim final rule for rural PSOs. HCFA is interested in the merit and appropriateness of separate standards, alternative proposals, relevant analysis, and administrative simplicity.

I. Credit for Reinsurance

As directed by the BBA, the Committee considered whether to allow a credit for reinsurance. Several Committee members advocated that reinsurance reduces the risk that PSOs will have to bear and would be particularly valuable during the initial stage where PSOs are likely to have fewer enrollees and claims are harder to predict. Committee members who opposed reinsurance argued that many HMO reinsurance contracts contain termination clauses that are triggered once an organization starts losing money. Underlying this contract issue is a broader problem; namely there would need to be provisions developed for Federal regulation and oversight of PSO reinsurers given the Federal waiver of State licensure. Without proper regulation and safeguards, reinsurance policies could not be relied upon to protect beneficiaries in the event of a financial crisis. Opponents also indicated that reinsurance is an essential part of a sound business plan. Therefore, it should not be treated as an optional credit against the minimum net worth amount. Lastly, to the extent that reinsurance will reduce a PSO's current and projected losses, reinsurance is implicitly recognized in the financial plan. The consensus was not to admit reinsurance as a credit against the minimum net worth amount. The Committee felt that to the extent that reinsurance reduces projected losses, it is implicitly recognized in the financial plan.

J. Financial Solvency Standards Provisions

The requirements of this interim final rule are found in 42 CFR Part 422, Subpart H, Provider-Sponsored Organizations. Here we set forth the solvency requirements for organizations that are applying for and are operating under an M+C contract.

Section § 422.350, *Basis, Scope and Definitions,* is amended to include definitions and terminology for new terms related to the solvency standards for PSOs.

Section § 422.380 sets forth the general requirement that a PSO must have a fiscally sound operation that meets the requirements of the following provisions.

Section 422.382 sets forth the minimum net worth amount requirements. There is a minimum net worth amount requirement for organizations that are in the process of applying for a PSO M+C contract, and another for organizations that are operating as a PSO under an M+C contract.

Paragraph (a) of § 422.382 sets forth the requirements that must be met at the time of application. An organization must have a $1,500,000 minimum net worth amount. This is the same amount that is specified in the HMO Model Act, except that under this regulation, HCFA has the discretion to reduce this amount by up to $500,000 for organizations that at the time of application have available administrative infrastructure that will reduce, control or eliminate administrative costs.

Paragraph (b) of § 422.382 sets forth the requirements that must be met after the effective date of an M+C contract. A PSO must have a minimum net worth amount of at least $1,000,000. The minimum net worth amount is determined by a ''greater of'' test. The

''greater of test'' requires a PSO to have a minimum net worth amount equal to the greater of—

- $1,000,000;
- Two percent of annual premium revenues up to and including the first $150,000,000 of annual premiums and 1 percent of annual premium revenues on premiums in excess of $150,000,000;
- An amount health care expenditures; or
- An amount equal to the sum of 8 percent of annual health care expenditures paid on a non-capitated basis to non-affiliated providers, and 4 percent of annual health care expenditures paid on a capitated basis to non-affiliated providers plus annual health care expenditures paid on a non-capitated basis to affiliated providers. Annual health care expenditures that are paid on a capitated basis to affiliated providers are not included in this calculation. In essence, the ''greater of'' test establishes a minimum net worth requirement above $1,000,000 that varies in proportion to the size of the PSO's operation.

Section 422.382(c) establishes the composition of assets that are needed to meet the minimum net worth requirement. The objective of the minimum net worth requirement is to enable PSOs to avoid a financial crisis or to mitigate the effects of a crisis. To achieve this, organizations applying to become PSOs are required to have on their balance sheets a minimum level of cash or cash equivalents. In paragraph (c)(1) of § 422.382, the minimum cash requirement is set at $750,000 at application, and at $750,000 or 40 percent of the minimum net worth amount after the effective date of the contract. After the effective date of an M+C contract the cash requirement above $750,000 is proportional to the minimum net worth amount. Lower cash requirements were proposed, but the Committee was unable to reach consensus on them. As discussed below, organizations that maintain a higher cash level are permitted to use a greater proportion of intangible assets to meet the minimum net worth requirement.

Other provisions of the paragraph address assets besides cash or cash equivalents that may be included in determining the minimum net worth, and limitations. Paragraph (c)(2) of § 422.382 establishes the proportion of the minimum net worth amount that may be comprised of intangible assets, depending on an organization's cash level. Intangible assets can comprise up to 10 percent of the minimum net worth amount, at the time of application for an organization with $750,000 (and less than $1,000,000) in cash or cash equivalents. However, an organization that has $1,000,000 in cash or cash equivalents at application can satisfy up to 20 percent of its minimum net worth amount requirement with intangible assets. After the effective date of the contract, an organization must maintain the greater of $1,000,000 or 67 percent of the minimum net worth amount in cash or cash equivalents to qualify for the admission of intangible assets up to 20 percent of the minimum net worth amount.

Under paragraph (c)(3) of § 422.382, HCDAs are admissible to satisfy the minimum net worth amount requirement, subject to the cash requirement. They are valued at 100 percent of their value according to GAAP. Section 1856(a) of the Act directed the Secretary to take into account ''the delivery system assets of [provider sponsored organizations].'' The recognition of HCDAs under GAAP, that often times is limited under SAP, was adopted to recognize that large portions of PSOs' assets are HCDAs. The Committee agreed that if the cash requirement were set at the appropriate level, then any perceived risk from recognizing HCDAs was reduced.

Under paragraph (c)(4) of § 422.382, other assets that are not used in the delivery of health care are admissible to satisfy the minimum net worth amount. However, they are admitted at their value according to State SAP which generally are more conservative than GAAP. Because SAP are determined at the State level, organizations will have to follow the accounting methodology approved by the insurance commissioner in the State in which they operate.

As set out in paragraph (c)(5) of § 422.382, an organization does not have to include subordinated debts or subordinated liabilities for the purpose of calculating the minimum net worth. (Subordinated liability is a new concept that the Committee defined to mean claims liablities otherwise due to providers that are retained by the PSO to meet the net worth requirements.) The Committee discussed this provision in the context of provider reimbursement arrangements that withhold a portion of payment contingent upon certain budget or utilization targets being met. The Committee agreed that if these payments are fully subordinated to all other creditors, then they should not be included in the calculation of a PSOs net worth for the purpose of meeting the minimum net worth amount requirement. We believe that this provision is another example how the concept of sweat equity is implicitly considered in these solvency standards.

In paragraph (c)(6) of § 422.382, deferred acquisition costs are not permitted to be included in the calculation of the minimum net worth amount. The Committee believed that in an insolvency situation, these would have little or no value.

Paragraphs (a) (b) and (c) of § 422.384 sets forth the financial plan requirement. The same documents required of Medicare contracting HMOs and CMPs under section 417.120(a)(2) of the Medicare regulations are required here; namely marketing plans, statements of revenue and expense, statements of sources and uses of funds, balance sheets, detailed justifications and assumptions supporting the financial plan, and statements of the availability of financial resources to meet projected losses.

PSOs should anticipate the need to utilize the services of qualified actuaries (e.g., a member in good standing with the American Academy of Actuaries) in (a) the preparation of financial plans consistent with the PSO's business plan, (b) the development of claim costs for the benefits to be offered by the PSO and (c) the analysis of claim liabilities and the necessary liquid assets to meet obligations on a timely basis. Accordingly, the Committee agreed that the financial plan must be satisfactory to HCFA. HCFA expects and, at its discretion, will ascertain that the information contained in the financial plan has been certified by reputable and qualified actuaries.

Paragraph (d) of § 422.384 sets forth the requirement that organizations that are projecting a loss must have the resources to fund those projected losses. This section also defines the conditions under which HCFA will recognize various arrangements as acceptable funding of projected losses. The general rule is that organizations must have on their balance sheets assets that they identify to fund projected losses. Exceptions are made for guarantees, LOCs, and other means provided that certain conditions are met.

Paragraph (e) of § 422.384 sets forth the exception to the ''on the balance sheet'' requirement that applies when guarantees are used to fund projected losses. Guarantees are permitted, but they are subject to a trial period. For the first year after the effective date of an M+C contract any organization using a guarantee must have from the guarantor, in cash or cash equivalents, funds to cover projected losses six months in advance of when needed. For example, prior to the effective date of an M+C contract, a PSO must have funding from

the guarantor equal to the projected losses for the first two quarters (6 months) of the contract. Before the start of the second quarter, funding of projected losses through the third quarter must be added to the balance sheet of the PSO. Because of the time it takes to bring a new contractor onto the HCFA systems, the first two quarters funding will need to be in the PSO, that is, on its balance sheet at least 45 days before the effective date of the contract. Quarters, or 90-day periods, will be counted from the effective date of a PSO's M+C contract.

If guarantee funding is timely during the first year, a PSO may reduce or eliminate the period of pre-funding in future years by providing notice to HCFA. Upon receipt of such notice, HCFA will have up to 60 days in which to modify or reject any changes in the period of prefunding. If the guarantee funding is not timely, then HCFA may take appropriate action including requiring an organization to use other methods or timing to fund projected losses. Lastly, guarantors and guarantees must meet the requirements specified under § 422.390, discussed below.

Paragraph (f) of § 422.384 sets forth the exception to the ''on the balance sheet'' requirement that applies when LOCs are used to fund projected losses. LOCs are admissible to fund projected losses on the condition that they are provided by a high quality source and be irrevocable, unconditional and satisfactory to HCFA. Additionally, LOCs must be capable of being promptly paid upon presentation of a sight draft under the LOCs without further reference to any other agreement, document or entity. The Committee agreed that HCFA should have the discretion to accept or reject a letter of credit.

Paragraph (g) of § 422.384 sets forth the exception to the ''on the balance sheet'' requirement that applies when other means are used to fund projected losses. Other means of funding such as LOCs credit, legally binding capital contribution agreements, and other legally binding contracts of similar quality are admissible to fund projected losses. However, these methods are available only after an organization has had an M+C contract for at least one year.

Paragraph (h) of § 422.384 sets forth the general rule that HCFA will have the discretion to decide whether a PSO is using guarantees, LOCs or other means in a combination or sequence that HCFA deems appropriate. We note here that the BBA directed the Secretary to take into account alternative means of protecting against insolvency including guarantees, LOCs and other means. The Committee considered whether to admit guarantees, LOCs, and other means to reduce the minimum net worth amount, as well as to fund projected losses. However, the consensus was to recognize them only toward meeting the requirement to fund projected losses.

Section 422.386(a) sets forth the general liquidity requirement that a PSO must have sufficient cash flow to meet its financial obligations as they become due and payable. This requirement is consistent with the standard that is applied to Medicare contracting HMOs and CMPs under 42 CFR § 417.120.

Paragraph (b) of § 422.386 contains three tests to determine whether an organization is able to meet its financial obligations as they become due and payable: (a) history for timeliness in meeting current obligations, (b) the extent to which a PSO maintains a current ratio of 1:1, and (c) the availability of outside financial resources to the PSO. The Committee adopted (a) because such a history is a strong signal of management's commitment to maintaining a fiscally sound organization.

The second test requires more discussion. We define ''current ratio'' as total current assets divided by total current liabilities, where the word ''current'' means less than one year. A current ratio of 1:1 means that an organization's current assets are sufficient to meet its current liabilities. The possibility exists that in the course of normal business operations PSOs may miss the current ratio slightly for short, nonrecurring periods of time. In light of this, HCFA is using a 1:1 current ratio as a target rather than as an absolute standard. Accordingly, HCFA will monitor PSOs that drop below the 1:1 ratio and act where a PSO experiences a long-term, declining trend or a sudden, large decline in its current ratio.

The use of trends in the current ratio allows HCFA to recognize certain situations where current assets do not have to equal or exceed current liabilities. For HMOs and PSOs in their early years, the reported current ratio results will likely produce misleading trends. The amount of pre-funding of projected losses ''within'' versus ''outside'' the organization may change over time, distorting trends. Changing patterns of liabilities (for example, 30-day business expenses unpaid or estimates of unreported claims) can also distort the current ratio from one based on consistent underlying data. Consequently, the PSO has an obligation to monitor underlying true trends and to provide such information, together with a projection of continuing current liabilities consistent with its business plans. The information should be certified by a qualified actuary and presented to HCFA prior to the filing of a timely financial report with a current ratio below standard.

The third test for evaluating liquidity highlights in several ways the importance of having outside financial resources available to a PSO. First, such resources fill a practical role by providing a cushion in the event of a financial crisis. Second, if such resources are available from a parent or affiliate organization, it signals a continuing commitment to the PSO. Third, the availability of such resources from outside the corporation, either from a private or a commercial source, indicates continuing market confidence that the organization is a viable ongoing business concern.

Paragraph (c) of § 422.386 requires that if HCFA determines that an organization is not in compliance with the liquidity requirement, it will require the organization to initiate corrective action to pay all overdue obligations.

Paragraphs (d) and (e) of § 422.386 specifies that corrective action can include requiring the organization to change the distribution of its assets, reduce its liabilities, secure additional funding, or secure funding from new funding sources.

Section 422.388 sets forth the deposit requirements to provide protection in the event of an insolvency. Paragraph (a) of § 422.388 establishes an insolvency deposit that organizations are required to make at the time of application and maintain for the duration of the M+C contract. The insolvency deposit is $100,000. The deposit must be restricted to use in the event of insolvency to help assure continuation of services or pay costs associated with receivership or liquidation. At the time of application and thereafter, upon HCFA's request, the organization must provide HCFA with proof of the insolvency deposit, in a form that HCFA considers appropriate.

Paragraph (b) of § 422.388 establishes an uncovered expenditures deposit requirement. The amount of uncovered expenditures that a PSO experiences will vary, and this deposit is required any time that they exceed 10 percent of the PSO's total health care expenditures. The deposit must at all times have a fair market value of an amount that is 120 percent of the PSO's outstanding liability for uncovered expenditures for enrollees, including incurred, but not reported claims. The deposit must be calculated as of the first day of each month required and maintained for the remainder of each month required. If a

quarterly report is not otherwise required, a report must be filed within 45 days of the end of the calendar quarter to demonstrate compliance. The deposit must be restricted for HCFA's use to protect the interests of the PSO's Medicare enrollees and to pay the costs associated with administering the insolvency. The deposit is restricted and in trust and may be used only as provided in § 422.388.

Under paragraph (c) of § 422.388 the deposits may be used to satisfy the organization's minimum net worth requirement. Under paragraph (d) of § 422.388 all income from the deposits or trust accounts are considered assets of the organization. Upon HCFA's approval, the income from the deposits may be withdrawn.

Paragraph (e) of § 422.388 sets forth requirements that upon HCFA's written approval, the income from the deposits may be withdrawn if a substitute deposit of cash or securities of equal amount and value is made, the fair market value exceeds the amount of the required deposit, or the required deposit is reduced or eliminated.

The deposit requirement for uncovered expenditures is triggered by a historical trend analysis that indicates such expenditures are comprising an increasing portion of total health care expenditures. The Committee adopted the HMO Model Act language for the uncovered expenditures deposit.

Section 422.390 sets forth the requirements for guarantors and guarantees, which under § 422.384(e), above, can be used to fund projected losses. We are exercising caution in the use of guarantees because we will have to monitor the financial viability of the PSO and the guarantor as well. We believe we have selected a screening approach that recognizes financially strong guarantors and protects Medicare enrollees, yet permits affiliated providers or parent organizations to support the PSO with financial backing.

Paragraph (a) of § 422.390 vests HCFA with the discretion to approve or deny the use of a guarantor. Paragraph (b) of § 422.390 initiates the approval process with a request from the PSO, including financial information on the guarantor.

Paragraph (c) of § 422.390 sets forth the requirements that a guarantor must meet to be licensed and authorized to conduct business within a State or territory of the United States. The guarantor must be solvent and not be under any Federal bankruptcy or State proceedings, and have a net worth of at least three times the amount of the guarantee.

A distinction is made between guarantors that are and are not regulated by a State insurance commissioner. If regulated by a State insurance commissioner, the guarantor's net worth calculation need only exclude from its assets the value of all guarantees, investments in and loans to organizations covered by guarantees. But, if a guarantor is not regulated by a State insurance commissioner, then it must also exclude the value of guarantees, investments and loans to related parties (i.e., subsidiaries and affiliates) from its assets to calculate its net worth. We believe these requirements ensure the stability and financial strength of the guarantor without being overly restrictive.

Paragraph (d) of § 422.390 contains provisions for the guarantee document to be submitted to HCFA by the PSO, and signed by the guarantor. This document is the written commitment of the guarantor to unconditionally fulfill its financial obligation to the PSO on a timely basis.

In paragraph (e) of § 422.390, the PSO is required to routinely report financial information on the guarantor.

Paragraph (f) of § 422.390 sets forth the requirements for modification, substitution, and termination of the guarantee. A PSO must have HCFA's approval at least 90 days before the proposed effective date of the modification, substitution, or termination; demonstrate to HCFA that insolvency will not result; and demonstrate how the PSO will meet the requirements of this section within 15 days, and if required by HCFA, meet a portion of the applicable requirements in less than the time period granted.

Paragraph (g) of § 422.390 establishes conditions that must be met if the guarantee is nullified. If at any time the guarantor or the guarantee ceases to meet the requirements of § 422.390, HCFA will notify the PSO that it ceases to recognize the guarantee document. In the event of nullification, a PSO must meet the applicable requirements of this section within 15 business days and if required by HCFA, meet a portion of the applicable requirements in less than the above time period. These requirements and conditions are not only good business practices, but also protect Medicare enrollees by ensuring that a PSO's financial backing is sound.

IV. Applicability of These Rules

The provisions of this rule apply only to certain PSOs and do not apply to any other type of Medicare applicant or contracting entity.

Organizations that may be considered PSOs and that meet any of the criteria as set forth in § 422.372 may be eligible for a waiver of State licensure. As discussed earlier, an organization interested in entering into a contract with Medicare as a PSO must first contact the appropriate State agency and, in most cases, submit an application for a State license, or authority. A PSO that is denied licensure (and the denial is related to any of the criteria cited) or is denied the opportunity to apply for licensure, should submit a request for a waiver to HCFA. Organizations that have their waiver request approved by HCFA may then submit a PSO application. The PSO application contains provisions for demonstrating compliance with the PSO definitions and solvency requirements in addition to other contracting requirements (a supplemental application may be necessary after the June regulation is published). It is during the application process that an organization will be determined to qualify as a PSO for purposes of Medicare contracting under Part C of the Act. The waiver will take effect with signing of the M+C contract.

The solvency standards established in this rule apply to organizations which have had a waiver approved, as described above, and are applying for a Medicare PSO contract, as well as waivered PSOs with a Medicare contract in effect. These rules were developed through negotiated rulemaking specifically for risk-bearing entities that will enroll primarily beneficiaries of the Medicare program. Federal and State government agencies that may contemplate use of these solvency standards for other purposes or other populations should review them carefully, and consider the nature of the health plans and the populations they will serve.

Provider-sponsored managed care plans that obtain a State license should apply directly for an M+C contract by completing the application for HMO/PPOs/State-licensed PSOs (i.e., this is the same application as used by HMOs). These entities, whether licensed as a PSO or HMO or other managed care plan recognized by the State, will not have to demonstrate compliance with the PSO definitions in § 422.350 through 356, or with the PSO solvency standards. However, State-licensed PSOs or State-licensed managed care plans that wish to meet the lower minimum enrollment standard will have to meet the definitions criteria of the PSO application. These ''State-licensed PSOs'' must meet the solvency standards as required by their State, not the Medicare PSO solvency standards as established in this interim final rule.

V. Regulatory Impact Analysis

A. Introduction

We have examined the impact of this interim final rule as required by Executive Order 12866 and the Regulatory Flexibility Act (RFA) (Public Law 96–354). Executive Order 12866 directs agencies to assess all costs and benefits of available regulatory alternatives and, when regulation is necessary, to select regulatory approaches that maximize net benefits (including potential economic, environmental and public health and safety effects; distributive impacts and equity). The Regulatory Flexibility Act (RFA) requires agencies to analyze options for regulatory relief for small businesses, unless we certify that the regulation would not have a significant economic impact on a substantial number of small entities. Most hospitals, and most other providers, physicians and health care suppliers are small entities either by non-profit status or by having revenues of less than $5 million annually. The impact of this regulation will be to create a new business opportunity for such small entities to form provider sponsored organizations to contract with the Medicare program.

Section 1102(b) of the Act requires us to prepare a regulatory impact analysis if a final rule may have a significant impact on the operations of a substantial number of small rural hospitals. This analysis must conform to the provisions of section 604 of the RFA. For purposes of section 1102(b) of the Act, we define a small rural hospital as a hospital that is located outside a Metropolitan Statistical Area and has fewer than 50 beds. We are not preparing an analysis for section 1102(b) of the Act because we have determined, and we certify, that this final rule will not have a significant impact on the operations of a substantial number of small rural hospitals.

We prepared this impact analysis because of the probability that these waiver requirements and solvency standards may have an impact on certain hospitals, physicians, health plans and other providers. We are preparing to publish a regulation outlining the overall provisions of the M+C program. That regulation will consider the impacts of PSOs and other new provider types in greater detail than is provided in this regulation. The following analysis, in combination with the rest of this interim final rule with comment period, constitutes a regulatory impact analysis and a regulatory flexibility analysis.

B. Background

While the term ''provider sponsored organization'' has been used generally in reference to health care delivery systems that providers own or control and operate, the term has a more specific meeting for purposes of the M+C program. Accordingly, we defined, by regulation, the fundamental organizational requirements for entities seeking to be PSOs. These definitions are set forth at 42 CFR 422.350. Organizations that meet these definitional requirements can apply for a Federal waiver and a M+C contract. Having defined the term PSO in earlier regulation, this rule has two broad purposes: (1) To establish the requirements and process necessary for organizations to obtain Federal waiver of license requirements for risk-bearing entities; and (2) to establish standards for financial solvency to which such Federally waived organizations must adhere.

With regard to the impact of the waiver requirements and process, we emphasize three important underlying factors. First, waivers cannot exceed 36-months in duration and are not renewable. Second, the Secretary's authority to grant waivers ends November 1, 2002. Finally, the Secretary can grant waivers only to organizations that have first applied for a State license as a risk bearing entity, but were denied by virtue of three things: (1) States' failure to act timely on the license application; (2) States' denial of the application for ''discriminatory'' reasons; or (3) States'' denial for failure to meet different solvency standards than are promulgated here. The first two factors (i.e., the duration of the waiver and the waiver authority) are important to this impact analysis because they indicate that, under current law, no organization will operate under a Federal waiver after November 1, 2005. The third fact regarding eligibility for a Federal waiver may have an effect on the waiver application rate.

The solvency standards have an even narrower focus than the waiver requirements because the former only effect organizations that have received a Federal waiver and are either applying for or actually have received an M+C contract. Within this smaller population, organizations will be affected differently or not at all depending upon the status of the solvency standards in their respective States. It is likely that waiver activity will be greater in States that have solvency standards that differ significantly from the standards developed in this regulation. Below we consider the anticipated impact of this rule.

C. Anticipated Effects

1. Effects on Providers

HCFA discussion with the industry as part of the negotiated rule making process suggests widespread interest in the benefits of becoming a PSO (i.e., waiver of State licensure and lower minimum enrollment standards). This regulation benefits certain health services providers that have been denied a State risk-bearing license by creating an opportunity for them to obtain a Federal waiver of the State license requirement and participate in the M+C program as contractors. As such, this regulation provides means for such providers to gain access to a market from which they otherwise would be excluded. While clearly not possible to predict how many organizations will attempt to take advantage of this new opportunity, we have seen estimates that the first year application rate will be between 25 and 150 organizations. For several reasons, we estimate between 25 and 50 organizations will apply. In the first year many organizations will be interested, but we expect that the ''learning curve'' necessary to gain familiarity with this new program will restrain the first year application rate. Second, the waiver process, which for this discussion includes the prerequisite State application process, and M+C application process, are time intensive steps. At a minimum, these steps could take up to 6 six months to complete. After the first year, however, the number of applicant organizations will increasingly be a function of PSOs' performance and their reception in the market place.

We do not expect that the waiver process will create a substantial additional burden for organizations. For one thing, the waiver process is not a mandatory burden. The waiver process affects only organizations that affirmatively choose to become Federally waived PSOs. For those organizations that apply, we estimate that the waiver application will require less than 20 hours to complete. However, we do believe that waiver applicants will face the additional task of documenting their denial of a State license.

Regarding the application for an M+C contract, there are existing application requirements for organizations that seek to contract with Medicare under section 1876 of the Act. We do not believe that the M+C application process, which will be essentially the same, will be any

more burdensome than an application under section 1876 of the Act. To the extent that organizations that previously have not contracted with the Medicare program choose to seek an M+C contract, the application will be a new task. Given the new provider focus of this initiative, it is plausible to expect that many applicants have not previously contracted directly with Medicare. However, we believe that the benefit to Medicare beneficiaries gained by screening potential contractors outweighs the burden associated with having a reasonable application process in place.

2. Effects on the Market Place

We expect that the advent of PSOs will increase market competition among health care service providers, albeit only slightly. The increase in competition is expected to be limited for four reasons. First, since Federally waived PSOs are limited to serving Medicare enrollees, any changes in competition will be primarily concentrated in the Medicare sector of the health services delivery market. We note that there may be crossover effects to the extent that service providers' success with Medicare may affect their success generally.

Second, we believe that this rule, primarily concerns the structure of entities that can participate in the market for Medicare enrollees. We expect transfer effects; that is, existing providers changing corporate form in order to avail themselves of PSO status. However, we do not anticipate a significant increase in the aggregate market place capacity of providers or health service delivery assets. The providers and hospitals that will form PSOs are coming from the same pool that are currently providing services. In addition, the principle effect on revenues will be a change in the source of payment from Medicare parts A and B to the new part C.

Third, to the extent that these solvency standards are similar to existing standards, the potential transfer effect will be limited. Since standards vary greatly by State, and State standards are evolving, it is difficult to assess the relative effect of the instant standards. We note, however, that with several key exceptions (e.g., different initial minimum net worth requirement and a lower insolvency deposit) the instant standards track the HMO Model Act. Therefore, we do not believe there will be a significant transfer due to the existence of an unlevel playing field between PSOs and other entities. We believe that establishing standards of financial solvency is necessary to insure that PSOs have the financial resources to provide adequate quality care and to reduce the possibility of disrupting beneficiary care.

Finally, in the preamble to this regulation, HCFA agreed that it will consider the NAIC's Risk Based Capital formula as well as the codification of Statutory Accounting Practices when these methodologies become available. If one or both of these methodologies are adopted for the PSO solvency standards, it would help to narrow any existing differences between State-level and Federal solvency standards.

3. Effects on States

This regulation will affect States in several ways, some of which are offsetting. First, we expect that a few States may have to reduce their application turnaround times in order to avoid tolling the 90-day limit for State review of a waiver application. However, based upon conversations with State insurance commissioners, we believe in many States the application turnaround time is at or near the 90-day limit.

The second effect will be a reduction in States' oversight burden. For PSOs that obtain a Federal waiver, responsibility for monitoring their financial solvency will be transferred from the States to HCFA. This is a temporary reduction, since waivers last only 36 months and the Secretary's authority to grant waivers ends on November 1, 2002. By the end of a PSO's waiver, it will need a State license in order to continue its M+C contract. Therefore, to ease the transition from a Federal waiver to a State license, we encourage PSOs to establish a relationship with regulators in their respective States soon after receiving a waiver. To minimize the chances of a gap in financial oversight, HCFA is negotiating with the State Insurance Commissioners via the NAIC to develop a Memorandum of Understanding regarding sharing information on the financial solvency of PSOs.

Lastly, it has been suggested that this interim final rule may pressure States to adopt solvency standards that mirror the Federal standards. Currently, we do not have a good measure of the extent to which this will occur. However, we emphasize that the negotiated rulemaking committee developed these solvency standards solely in the context of Federally waived PSOs that will provide services under an M+C contract. States are cautioned not to adopt these standards for general application without first considering their affect on the overall health services delivery market in their jurisdictions.

4. Effects on Beneficiaries

We expect that this regulation will have a positive effect on Medicare beneficiaries since it creates a new managed care option. We expect that the principle source for enrollees for newly formed PSOs will be current Medicare fee-for-service enrollees. We expect that the advent of PSOs and M+C in general will have the effect of further mainstreaming managed care plans among Medicare enrollees. We do not anticipate an increase in the potential for service interruptions because these new PSOs will be subject to the same beneficiary hold-harmless provisions and continuation of benefits requirements as all M+C organizations. Lastly, section 1855(a)(2)(G) of the Act requires PSOs to comply with all existing State consumer protection and quality standards as if the PSO were licensed under State law.

D. Conclusion

By enacting the BBA provisions related to PSOs, Congress has indicated its belief in the potential for provider controlled organizations to improve the delivery of services to Medicare beneficiaries. While expanding the options available to Medicare beneficiaries, we believe that this regulation provides an opportunity for providers to test their ability to manage the delivery of health care services. The negotiated rulemaking Committee, which included representatives from the entire range of interested parties, reached consensus on provisions that were acceptable when considered as a whole. It is safe to say that Committee members considered the impact of these provisions on their respective constituencies during the negotiating process.

We conclude that this regulation will have an undeterminable impact on small health service providers. However the provisions of this interim final rule are expected to be favorable for the managed care community as a whole, as well as for the beneficiaries that they serve. We have also determined, and the Secretary certifies that this proposed rule will not result in a significant economic impact on a substantial number of small entities and would not have a significant impact on the operations of a substantial number of rural hospitals. In accordance with the provisions of Executive order 12866, this regulation was reviewed by the Office of Management and Budget.

VI. Collection of Information Requirements

Emergency Clearance: Public Information Collection Requirements Submitted to the Office of Management and Budget (OMB)

In compliance with the requirement of section 3506(c)(2)(A) of the Paperwork Reduction Act of 1995, the Health Care Financing Administration (HCFA), Department of Health and Human Services (DHHS), has submitted to the Office of Management and Budget (OMB) the following request for Emergency review. We are requesting an emergency review because the collection of this information is needed prior to the expiration of the normal time limits under OMB's regulations at 5 CFR, Part 1320. The Agency cannot reasonably comply with the normal clearance procedures because of the statutory requirement, as set forth in section 1856 of Balanced Budget Act of 1997, to implement these requirements on June 1, 1998.

HCFA is requesting OMB review and approval of this collection within eleven working days, with a 180-day approval period. Written comments and recommendations will be accepted from the public if received by the individual designated below, within ten working days of publication of this notice in the **Federal Register**.

During this 180-day period HCFA will pursue OMB clearance of this collection as stipulated by 5 CFR. 1320.5.

In order to fairly evaluate whether an information collection should be approved by OMB, section 3506(c)(2)(A) of the PRA requires that we solicit comment on the following issues:

- The need for the information collection and its usefulness in carrying out the proper functions of our agency.
- The accuracy of our estimate of the information collection burden.
- The quality, utility, and clarity of the information to be collected.
- Recommendations to minimize the information collection burden on the affected public, including automated collection techniques.

Therefore, we are soliciting public comment on each of these issues for the information collection requirements discussed below.

Section 422.374(a), requires an organization to submit a waiver request if it has been denied licensure as a risk-bearing entity by the State in which it operates or wishes to operate. To facilitate the implementation of the requirements of this section we developed a model waiver request form and submitted it to OMB for emergency clearance in compliance with section 3506(c)(2)(a) of Paperwork Reduction Act of 1995. OMB has concurred with the model request form, and the form and instructions are currently on view on the HCFA web site, the address of which is provided in section II.A.3 of this document. The OMB approval number is 0938–0722 and is referenced on the document.

A modification of this waiver request form is necessary to incorporate the fourth criterion for a waiver of State licensure as established in this interim final rule. The additional criterion allows a PSO-type organization to forego a lengthy application process with the State if the State informs the organization in writing that such an application will not be reviewed. As part of the waiver request, the organization will be required to submit a copy of the written communication from the State. This criterion is mentioned in the purpose section of the form, and, with publication of this rule, we can add it to the check list in section III, Waiver Eligibility. We intend to submit this modification to OMB in the near future.

Section 422.382(c) establishes the composition of assets the organization must have at the time it applies to contract with HCFA as a PSO. The organization must demonstrate that it has the required minimum net worth amount as determined under paragraph (c), demonstrate that it will maintain at least $750,000 of the minimum net worth amount in cash or cash equivalents, and demonstrate that after the effective date of a PSO's M+C contract, a PSO will maintain the necessary minimum net worth.

Section 422.384 requires that at the time of application, an organization must submit a financial plan acceptable to HCFA. The financial plan must include a detailed marketing plan; statements of revenue and expense on an accrual basis; a cash flow statement; balance sheets; the assumptions in support of the financial plan; and if applicable, statements of the availability of financial resources to meet projected losses. The financial plan must cover the first 12 months after the estimated effective date of a PSO's M+C contract; or if the PSO is projecting losses, cover 12 months beyond the period for which losses are projected. Except for the use of guarantees, LOC, and other means as provided in paragraphs (e), (f), (g) and (h) of § 422.384, an organization must demonstrate that it has the resources for meeting projected losses on its balance sheet in cash or a form that is convertible to cash in a timely manner, in accordance with the PSO's financial plan.

Guarantees will be an acceptable resource to fund projected losses, provided that the guarantor complies with the requirements in paragraph (e)(2) of this section, and the PSO, in the third quarter, notifies HCFA and requests a reduction in the period of advance funding of projected losses.

Section 422.386 sets forth the general liquidity requirement that at the time of application the PSO must demonstrate that it has sufficient cash flow to meet its financial obligations as they become due and payable. To meet this requirement HCFA will consider: the PSO's timeliness in meeting current obligations, the extent to which the PSO's current ratio of assets to liabilities is maintained at 1:1 and whether there is a decline in the current ratio over time, and the availability of outside financial resources to the PSO.

Section 422.388 sets forth the deposit requirements to provide protection in the event of an insolvency. At the time of application, an organization must demonstrate that they have deposited $100,000 in cash or securities (or any combination thereof) into an account in a manner that is acceptable to HCFA, and demonstrate that the deposit will be restricted only to use in the event of insolvency to help assure continuation of services or pay costs associated with receivership or liquidation.

At the time of the PSO's application for an M+C contract and, thereafter, upon HCFA's request, a PSO must provide HCFA with proof of the insolvency deposit, such proof to be in a form that HCFA considers appropriate.

If at any time uncovered expenditures exceed 10 percent of a PSO's total health care expenditures, then the PSO must demonstrate in a manner acceptable to HCFA that it has placed an uncovered expenditures deposit into an account with an organization or trustee.

The PSO must also demonstrate that, at all times the deposit will have a fair market value of an amount that is 120 percent of the PSO's outstanding liability for uncovered expenditures for enrollees, including incurred, but not reported claims; the deposit will be calculated as of the first day of each month required and maintained for the remainder of each month required; if a PSO is not otherwise required to file a quarterly report, it must file a report within 45 days of the end of the calendar quarter with information sufficient to demonstrate compliance with this section; the deposit required under this section will be restricted and in trust and may be used only as provided under this section.

As stated above, the burden associated with these provisions will be

captured as part of the M+C PSO application and/or quarterly financial reporting processes, similar to section 1876 HMO and CMP contractor applications and quarterly financial reporting processes. Based on section 1876 of the Act, we estimate the burden associated with the submission of the application to be 100 hours per application and 62 annual hours per organization to submit their quarterly financial report. Based upon the current volume of waiver reporting workload, we estimate that on an annual basis, we will receive 25 to 50 applications and 25 organizations will contract with us and will be required to submit quarterly financial reports.

Under § 422.388(d) PSOs may submit a written request to withdraw income from the solvency deposits. We anticipate that, on an annual basis, we will receive less than 10 requests. Therefore, these requirements are not subject to the Paperwork Reduction Act as defined in 5 CFR 1320.3(c).

Under § 422.388(e) a PSO may submit a written request to withdraw or substitute a deposit. We anticipate that, on an annual basis, we will receive less than 10 requests. Therefore, these requirements are not subject to the PRA as defined in 5 CFR 1320.3(c).

Under § 422.390(b), in order to apply to use the financial resources of a guarantor, a PSO must submit to HCFA, documentation that the guarantor meets the requirements for a guarantor under paragraph (c) of this section; and the guarantor's independently audited financial statements for the current year-to-date and for the two most recent fiscal years. The financial statements must include the guarantor's balance sheets, profit and loss statements, and cash flow statements. We believe that the initial burden associated with this activity is most likely incurred during the application process, for which we have previously estimated the aggregate burden. We expect that less than 10 PSOs per year will incur this burden in subsequent years. Therefore, these requirements are not subject to the Paperwork Reduction Act as defined in 5 CFR 1320.3(c).

Under § 422.390(d), if the guarantee request is approved, a PSO must submit to HCFA a written guarantee document signed by an appropriate authority of the guarantor. The guarantee document must state the financial obligation covered by the guarantee; agree to unconditionally fulfill the financial obligation covered by the guarantee and not subordinate the guarantee to any other claim on the resources of the guarantor; declare that the guarantor will act on a timely basis (that is, in not more than 5 business days) to satisfy the financial obligation covered by the guarantee; and meet other conditions as HCFA may establish from time to time. We believe that the initial burden associated with this activity is most likely incurred during the application process, for which we have previously estimated the aggregate burden. We expect that less than 10 PSOs per year will incur this burden in subsequent years. Therefore, these requirements are not subject to the PRA as defined in 5 CFR 1320.3(c)

A PSO must submit to HCFA the current internal financial statements and annual audited financial statements of the guarantor according to the schedule, manner, and form that HCFA requests.

A PSO cannot modify, substitute or terminate a guarantee unless the PSO requests HCFA's approval at least 90 days before the proposed effective date of the modification, substitution, or termination; demonstrates to HCFA's satisfaction that the modification, substitution, or termination will not result in insolvency of the PSO; and demonstrates how the PSO will meet the requirements of this section.

The public will be afforded several subsequent comment periods in future publications of **Federal Register** notices announcing our intention to seek OMB approval for the application and quarterly reporting information collection requirements, including a modified version of the National Data Reporting Requirements (the Orange Blank), that will be submitted to OMB in the near future.

We have submitted a copy of this rule to OMB for its review of the information collection requirements above. To obtain copies of the supporting statement and any related forms for the proposed paperwork collections referenced above, E-mail your request, including your address, phone number and HCFA regulation identifier HCFA–1011, to Paperwork@hcfa.gov, or call the Reports Clearance Office on (410) 786–1326.

As noted above, comments on these information collection and record keeping requirements must be mailed and/or faxed to the designee referenced below, within ten working days of publication of this collection in the **Federal Register**:

Health Care Financing Administration, Office of Information Services, Information Technology Investment Management Group, Division of HCFA Enterprise Standards, Room C2–26–17, 7500 Security Boulevard, Baltimore, MD 21244–1850. *Attn:* John Burke HCFA–1011. *Fax Number:* (410) 786–1415, and,

Office of Information and Regulatory Affairs, Office of Management and Budget, Room 10235, New Executive Office Building, Washington, DC 20503, *Attn:* Allison Herron Eydt, HCFA Desk Officer. *Fax Number:* (202) 395–6974 or (202) 395–5167

VII. Waiver of Notice of Proposed Rulemaking

We ordinarily publish a notice of proposed rulemaking in the **Federal Register** to provide a period for public comment before the provisions of a rule are made final. Section 1871(b) of the Act, however, provides that publication of a notice of proposed rulemaking is not required before issuing a final rule where a statute specifically permits a regulation to be issued in interim final form. Section 1856(a)(1) of the Act, as added by section 4001 of the BBA, directs the Secretary to establish the solvency standards for PSOs on an expedited basis using a negotiated rulemaking process. Section 1856(a)(8) provides for the publication of solvency standards as an interim final rule, with an opportunity for comment to follow. Under section 1856(a)(3), the ''target date'' for publication of this rule was April 1, 1998. We are promulgating the solvency provisions in this rule according to the expressed interim final rule authority in section 1856(a)(8).

Section 1856(b)(1) also provides for the publication of other standards implementing the new M+C program in Part C on an interim final basis, with an opportunity for comment to follow. The PSO waiver provisions in this rule are being promulgated according to this latter expressed interim final rule authority. In addition, we may waive publication of a notice of proposed rulemaking if we find good cause that prior notice and comment are impractical, unnecessary, or contrary to public interest. As discussed earlier in this preamble, HCFA and the Committee believe that we need to establish the PSO waiver process early in order to allow the sequence of waiver request, application, and contract signing to occur, and to have PSOs initiate operations upon implementation of the M+C program. Further, we determined that entities considering applying to become PSOs under the M+C program need to know whether and how they can qualify to participate in the program in order to establish the complex organizational structures necessary under the law prior to application. Many of these entities also need to seek State licensure or a Federal waiver.

Given the time required for these events, and the clear impetus from the Congress for implementation of the M+C program, we believe that it is impractical and contrary to the public interest to publish a notice of proposed rulemaking before establishing the Federal waiver and solvency standards set forth in this interim final rule. We are providing a 60-day period for public comment.

VIII. Response to Comments

Because of the large number of items of correspondence we normally receive on **Federal Register** documents published for comment, we are not able to acknowledge or respond to them individually. We will consider all comments we receive by the date and time specified in the **DATES** section of this preamble, and, when we proceed with a subsequent document, we will respond to the comments in the preamble to that document.

List of Subjects in 42 CFR Part 422

Health Maintenance organizations (HMO), Medicare+Choice, Provider sponsored organizations (PSO).

42 CFR Part 422 is amended as set forth below:

PART 422—MEDICARE+CHOICE PROGRAM

Subpart H—Provider-Sponsored Organizations

1. The authority citation for Part 422 continues to read as follows:

Authority: Secs. 1851, 1855 and 1856 of the Social Security Act (42 U.S.C. 1302, 1395w–21 through 1395w–27, and 1395hh).

2. Section 422.350(b) is amended by adding the following definitions in alphabetical order:

§ 422.350 Basis, scope, and definitions.

* * * * *

(b) * * *

Capitated basis is a payment method under which a fixed per member, per month amount is paid for contracted services without regard to the type, cost or frequency of services provided.

Cash equivalent means those assets excluding accounts receivables, which can be exchanged on an equivalent basis as cash, or converted into cash within 90 days from their presentation for exchange.

* * * * *

Current ratio means total current assets divided by total current liabilities.

Deferred acquisition costs are those costs incurred in starting or purchasing a business. These costs are capitalized as intangible assets and carried on the balance sheet as deferred charges since they benefit the business for periods after the period in which the costs were incurred.

* * * * *

Generally accepted accounting principles (GAAP) means broad rules adopted by the accounting profession as guides in measuring, recording, and reporting the financial affairs and activities of a business to its owners, creditors and other interested parties.

Guarantor means an entity that—

(1) Has been approved by HCFA as meeting the requirements to be a guarantor; and

(2) Obligates its resources to a PSO to enable the PSO to meet the solvency requirements required to contract with HCFA as an M+C organization.

Health care delivery assets (HCDAs) means any tangible assets that are part of a PSO's operation, including hospitals and other medical facilities and their ancillary equipment, and such property as may be reasonably required for the PSO's principal office or for such other purposes as the PSO may need for transacting its business.

* * * * *

Insolvency means a condition where the liabilities of the debtor exceed the fair valuation of its assets.

M+C stands for Medicare+Choice.

Net Worth means the excess of total assets over total liabilities, excluding fully subordinated debt or subordinated liabilities.

* * * * *

Qualified Actuary means a member in good standing of the American Academy of Actuaries or a person recognized by the Academy as qualified for membership, or a person who has otherwise demonstrated competency in the field of actuarial determination and is satisfactory to HCFA.

Statutory accounting practices means those accounting principles or practices prescribed or permitted by the domiciliary State insurance department in the State that PSO operates.

Subordinated debt means an obligation that is owed by an organization, that the creditor of the obligation, by law, agreement, or otherwise, has a lower repayment rank in the hierarchy of creditors than another creditor. The creditor would be entitled to repayment only after all higher ranking creditors' claims have been satisfied. A debt is fully subordinated if it has a lower repayment rank than all other classes of creditors.

Subordinated liability means claims liabilities otherwise due to providers that are retained by the PSO to meet net worth requirements and are fully subordinated to all other creditors.

Uncovered expenditures means those expenditures for health care services that are the obligation of an organization, for which an enrollee may also be liable in the event of the organization's insolvency and for which no alternative arrangements have been made that are acceptable to HCFA. They include expenditures for health care services for which the organization is at risk, such as out-of-area services, referral services and hospital services. However, they do not include expenditures for services when a provider has agreed not to bill the enrollee.

3. A new § 422.370 is added to read as follows:

§ 422.370 Waiver of State licensure.

For an organization that seeks to contract as an M+C plan under this subpart, HCFA may waive the State licensure requirement of section 1855(a)(1) of the Act if—

(1) The organization requests a waiver no later than November 1, 2002; and

(2) HCFA determines there is a basis for a waiver under § 422.372.

4. A new § 422.372 is added to read as follows:

§ 422.372 Basis for waiver of State licensure.

In response to a request from an organization and subject to paragraphs (a) and (e) of § 422.374, HCFA may waive the State licensure requirement if the organization has applied (except as provided for in paragraph (d) of this section) for the most closely appropriate State license or authority to conduct business as an M+C plan as set forth in section 1851(a)(2)(A) of the Act and any of the following conditions are met:

(a) *Failure to act timely on application.* The State failed to complete action on the licensing application within 90 days of the date the State received a substantially complete application.

(b) *Denial of application based on discriminatory treatment.* The State has—

(1) Denied the licensure application on the basis of material requirements, procedures, or standards (other than solvency requirements) not generally applied by the State to other entities engaged in a substantially similar business; or

(2) Required, as a condition of licensure, that the organization offer any product or plan other than an M+C plan.

(c) *Denial of application based on different solvency requirements.* (1) The State has denied the licensure

application, in whole or in part, on the basis of the organization's failure to meet solvency requirements that are different from those set forth in §§ 422.380 through 422.390; or

(2) HCFA determines that the State has imposed, as a condition of licensure, any documentation or information requirements relating to solvency or other material requirements that are different from the requirements, procedures, or standards set forth by HCFA to implement, monitor and enforce §§ 422.380 through 422.390.

(d) The appropriate State licensing authority has notified the organization in writing that it will not accept their licensure application.

5. A new § 422.374 is added to read as follows:

§ 422.374 Waiver request and approval process.

(a) *Substantially complete waiver request.* The organization must submit a substantially complete waiver request that clearly demonstrates and documents its eligibility for a waiver under § 422.372.

(b) *Prompt action on waiver request.* The organization will be notified in writing within 60 days of having submitted to HCFA a substantially complete waiver request whether the waiver request has been granted or denied.

(c) *Subsequent waiver requests.* An organization that has had a waiver request denied, may submit subsequent waiver requests until November 1, 2002.

(d) *Effective date.* A waiver granted under § 422.370 will be effective on the effective date of the organization's M+C contract.

(e) *Consistency in application.* HCFA reserves the right to revoke waiver eligibility if it subsequently determines that the organization's M+C application is significantly different from the application submitted by the organization to the State licensing authority.

6. A new § 422.376 is added to read as follows:

§ 422.376 Conditions of the waiver.

A waiver granted under this section is subject to the following conditions:

(a) *Limitation to State.* The waiver is effective only for the particular State for which it is granted and does not apply to any other State. For each State in which the organization wishes to operate without a State license, it must submit a waiver request and receive a waiver.

(b) *Limitation to 36-month period.* The waiver is effective for 36 months or through the end of the calendar year in which the 36 month period ends unless it is revoked based on paragraph (c) of this section.

(c) *Mid-period revocation.* During the waiver period (set forth in paragraph (b) of this section), the waiver is automatically revoked upon—

(1) Termination of the M+C contract;

(2) The organization's compliance with the State licensure requirement of section 1855(a)(1) of the Act; or

(3) The organization's failure to comply with § 422.378.

7. A new § 422.378 is added to read as follows:

§ 422.378 Relationship to State law.

(a) *Preemption of State law.* Any provisions of State law that relate to the licensing of the organization and that prohibit the organization from providing coverage under a contract as specified in this subpart, are superseded.

(b) *Consumer protection and quality standards.* (1) A waiver of State licensure granted under this subpart is conditioned upon the organization's compliance with all State consumer protection and quality standards that—

(i) Would apply to the organization if it were licensed under State law;

(ii) Generally apply to other M+C organizations and plans in the State; and

(iii) Are consistent with the standards established under this part.

(2) The standards specified in paragraph (b)(1) of this section do not include any standard preempted under section 1856(b)(3)(B) of the Act.

(c) *Incorporation into contract.* In contracting with an organization that has a waiver of State licensure, HCFA incorporates into the contract the requirements specified in paragraph (b) of this section.

(d) *Enforcement.* HCFA may enter into an agreement with a State for the State to monitor and enforce compliance with the requirements specified in paragraph (b) of this section by an organization that has obtained a waiver under this subpart.

8. A new § 422.380 is added to read as follows:

§ 422.380 Solvency standards.

General rule. A PSO or the legal entity of which the PSO is a component that has been granted a waiver under § 422.370 must have a fiscally sound operation that meets the requirements of §§ 422.382 through 422.390.

9. A new § 422.382 is added to read as follows:

§ 422.382 Minimum net worth amount.

(a) At the time an organization applies to contract with HCFA as a PSO under this part, the organization must have a minimum net worth amount, as determined under paragraph (c) of this section, of:

(1) At least $1,500,000, except as provided in paragraph (a)(2) of this section.

(2) No less than $1,000,000 based on evidence from the organization's financial plan (under § 422.384) demonstrating to HCFA's satisfaction that the organization has available to it an administrative infrastructure that HCFA considers appropriate to reduce, control or eliminate start-up administrative costs.

(b) After the effective date of a PSO's M+C contract, a PSO must maintain a minimum net worth amount equal to the greater of—

(1) One million dollars;

(2) Two percent of annual premium revenues as reported on the most recent annual financial statement filed with HCFA for up to and including the first $150,000,000 of annual premiums and 1 percent of annual premium revenues on premiums in excess of $150,000,000;

(3) An amount equal to the sum of three months of uncovered health care expenditures as reported on the most recent financial statement filed with HCFA; or

(4) Using the most recent annual financial statement filed with HCFA, an amount equal to the sum of—

(i) Eight percent of annual health care expenditures paid on a non-capitated basis to non-affiliated providers; and

(ii) Four percent of annual health care expenditures paid on a capitated basis to non-affiliated providers plus annual health care expenditures paid on a non-capitated basis to affiliated providers.

(iii) Annual health care expenditures that are paid on a capitated basis to affiliated providers are not included in the calculation of the net worth requirement under paragraphs (a) and (b)(4) of this section.

(c) *Calculation of the minimum net worth amount*—(1) *Cash requirement.* (i) At the time of application; the organization must maintain at least $750,000 of the minimum net worth amount in cash or cash equivalents.

(ii) After the effective date of a PSO's M+C contract, a PSO must maintain the greater of $750,000 or 40 percent of the minimum net worth amount in cash or cash equivalents.

(2) *Intangible Assets.* An organization may include intangible assets, the value of which is based on Generally Accepted Accounting Principles (GAAP), in the minimum net worth amount calculation subject to the following limitations—

(i) *At the time of application.* (A) Up to 20 percent of the minimum net worth amount, provided at least $1,000,000 of the minimum net worth amount is met through cash or cash equivalents; or

(B) Up to 10 percent of the minimum net worth amount, if less than $1,000,000 of the minimum net worth amount is met through cash or cash equivalents, or if HCFA has used its discretion under paragraph (a)(2) of this section.

(ii) *From the effective date of the contract.* (A) Up to 20 percent of the minimum net worth amount if the greater of $1,000,000 or 67 percent of the minimum net worth amount is met by cash or cash equivalents; or

(B) Up to ten percent of the minimum net worth amount if the greater of $1,000,000 or 67 percent of the minimum net worth amount is not met by cash or cash equivalents.

(3) *Health Care Delivery Assets.* Subject to the other provisions of this section, a PSO may apply 100 percent of the GAAP depreciated value of health care delivery assets (HCDAs) to satisfy the minimum net worth amount.

(4) *Other assets.* A PSO may apply other assets not used in the delivery of health care provided that those assets are valued according to statutory accounting practices (SAP) as defined by the State.

(5) *Subordinated debts and subordinated liabilities.* Fully subordinated debt and subordinated liabilities are excluded from the minimum net worth amount calculation.

(6) *Deferred acquisition costs.* Deferred acquisition costs are excluded from the calculation of the minimum net worth amount.

10. A new § 422.384 is added to read as follows:

§ 422.384 Financial plan requirement.

(a) *General rule.* At the time of application, an organization must submit a financial plan acceptable to HCFA.

(b) *Content of plan.* A financial plan must include—

(1) A detailed marketing plan;

(2) Statements of revenue and expense on an accrual basis;

(3) Statements of sources and uses of funds;

(4) Balance sheets;

(5) Detailed justifications and assumptions in support of the financial plan including, where appropriate, certification of reserves and actuarial liabilities by a qualified health maintenance organization actuary; and

(6) If applicable, statements of the availability of financial resources to meet projected losses.

(c) *Period covered by the plan.* A financial plan must—

(1) Cover the first 12 months after the estimated effective date of a PSO's M+C contract; or

(2) If the PSO is projecting losses, cover 12 months beyond the end of the period for which losses are projected.

(d) *Funding for projected losses.* Except for the use of guarantees, LOC, and other means as provided in § 422.384(e), (f) and (g), an organization must have the resources for meeting projected losses on its balance sheet in cash or a form that is convertible to cash in a timely manner, in accordance with the PSO's financial plan.

(e) *Guarantees and projected losses.* Guarantees will be an acceptable resource to fund projected losses, provided that a PSO—

(1) Meets HCFA's requirements for guarantors and guarantee documents as specified in § 422.390; and

(2) Obtains from the guarantor cash or cash equivalents to fund the projected losses timely, as follows—

(i) Prior to the effective date of a PSO's M+C contract, the amount of the projected losses for the first two quarters;

(ii) During the first quarter and prior to the beginning of the second quarter of a PSO's M+C contract, the amount of projected losses through the end of the third quarter; and

(iii) During the second quarter and prior to the beginning of the third quarter of a PSO's M+C contract, the amount of projected losses through the end of the fourth quarter.

(3) If the guarantor complies with the requirements in paragraph (e)(2) of this section, the PSO, in the third quarter, may notify HCFA of its intent to reduce the period of advance funding of projected losses. HCFA will notify the PSO within 60 days of receiving the PSO's request if the requested reduction in the period of advance funding will not be accepted.

(4) If the guarantee requirements in paragraph (e)(2) of this section are not met, HCFA may take appropriate action, such as requiring funding of projected losses through means other than a guarantee. HCFA retains discretion to require other methods or timing of funding, considering factors such as the financial condition of the guarantor and the accuracy of the financial plan.

(f) *Letters of credit.* Letters of credit are an acceptable resource to fund projected losses, provided they are irrevocable, unconditional, and satisfactory to HCFA. They must be capable of being promptly paid upon presentation of a sight draft under the letters of credt without further reference to any other agreement, document, or entity.

(g) *Other means.* If satisfactory to HCFA, and for periods beginning one year after the effective date of a PSO's M+C contract, a PSO may use the following to fund projected losses—

(1) Lines of credit from regulated financial institutions;

(2) Legally binding agreements for capital contributions; or

(3) Legally binding agreements of a similar quality and reliability as permitted in paragraphs (g)(1) and (2) of this section.

(h) *Application of guarantees, Letters of credit or other means of funding projected losses.* Notwithstanding any other provision of this section, a PSO may use guarantees, letters of credit and, beginning one year after the effective date of a PSO's M+C contract, other means of funding projected losses, but only in a combination or sequence that HCFA considers appropriate.

11. A new § 422.386 is added to read as follows:

§ 422.386 Liquidity.

(a) A PSO must have sufficient cash flow to meet its financial obligations as they become due and payable.

(b) To determine whether the PSO meets the requirement in paragraph (a) of this section, HCFA will examine the following—

(1) The PSO's timeliness in meeting current obligations;

(2) The extent to which the PSO's current ratio of assets to liabilities is maintained at 1:1 including whether there is a declining trend in the current ratio over time; and

(3) The availability of outside financial resources to the PSO.

(c) If HCFA determines that a PSO fails to meet the requirement in paragraph (b)(1) of this section, HCFA will require the PSO to initiate corrective action and pay all overdue obligations.

(d) If HCFA determines that a PSO fails to meet the requirement of paragraph (b)(2) of this section, HCFA will require the PSO to initiate corrective action to—

(1) Change the distribution of its assets;

(2) Reduce its liabilities; or

(3) Make alternative arrangements to secure additional funding to restore the PSO's current ratio to 1:1.

(e) If HCFA determines that a PSO fails to meet the requirement of paragraph (b)(3) of this section, HCFA will require the PSO to obtain funding from alternative financial resources.

12. A new § 422.388 is added to read as follows:

§ 422.388 Deposits.

(a) *Insolvency deposit.* (1) At the time of application, an organization must deposit $100,000 in cash or securities (or any combination thereof) into an account in a manner that is acceptable to HCFA.

(2) The deposit must be restricted to use in the event of insolvency to help assure continuation of services or pay costs associated with receivership or liquidation.

(3) At the time of the PSO's application for an M+C contract and, thereafter, upon HCFA's request, a PSO must provide HCFA with proof of the insolvency deposit, such proof to be in a form that HCFA considers appropriate.

(b) *Uncovered expenditures deposit.* (1) If at any time uncovered expenditures exceed 10 percent of a PSO's total health care expenditures, then the PSO must place an uncovered expenditures deposit into an account with any organization or trustee that is acceptable to HCFA.

(2) The deposit must at all times have a fair market value of an amount that is 120 percent of the PSO's outstanding liability for uncovered expenditures for enrollees, including incurred, but not reported claims.

(3) The deposit must be calculated as of the first day of each month required and maintained for the remainder of each month required.

(4) If a PSO is not otherwise required to file a quarterly report, it must file a report within 45 days of the end of the calendar quarter with information sufficient to demonstrate compliance with this section.

(5) The deposit required under this section is restricted and in trust for HCFA's use to protect the interests of the PSO's Medicare enrollees and to pay the costs associated with administering the insolvency. It may be used only as provided under this section.

(c) A PSO may use the deposits required under paragraphs (a) and (b) of this section to satisfy the PSO's minimum net worth amount required under § 422.382(a) and (b).

(d) All income from the deposits or trust accounts required under paragraphs (a) and (b) of this section, are considered assets of the PSO. Upon HCFA's approval, the income from the deposits may be withdrawn.

(e) On prior written approval from HCFA, a PSO that has made a deposit under paragraphs (a) or (b) of this section, may withdraw that deposit or any part thereof if—

(1) A substitute deposit of cash or securities of equal amount and value is made;

(2) The fair market value exceeds the amount of the required deposit; or

(3) The required deposit under paragraphs (a) or (b) of this section is reduced or eliminated.

13. A new § 422.390 is added to read as follows:

§ 422.390 Guarantees.

(a) *General policy.* A PSO, or the legal entity of which the PSO is a component, may apply to HCFA to use the financial resources of a guarantor for the purpose of meeting the requirements in § 422.384. HCFA has the discretion to approve or deny approval of the use of a guarantor.

(b) *Request to use a guarantor.* To apply to use the financial resources of a guarantor, a PSO must submit to HCFA—

(1) Documentation that the guarantor meets the requirements for a guarantor under paragraph (c) of this section; and

(2) The guarantor's independently audited financial statements for the current year-to-date and for the two most recent fiscal years. The financial statements must include the guarantor's balance sheets, profit and loss statements, and cash flow statements.

(c) *Requirements for guarantor.* To serve as a guarantor, an organization must meet the following requirements:

(1) Be a legal entity authorized to conduct business within a State of the United States.

(2) Not be under Federal or State bankruptcy or rehabilitation proceedings.

(3) Have a net worth (not including other guarantees, intangibles and restricted reserves) equal to three times the amount of the PSO guarantee.

(4) If the guarantor is regulated by a State insurance commissioner, or other State official with authority for risk-bearing entities, it must meet the net worth requirement in § 422.390(c)(3) with all guarantees and all investments in and loans to organizations covered by guarantees excluded from its assets.

(5) If the guarantor is not regulated by a State insurance commissioner, or other similar State official it must meet the net worth requirement in § 422.390(c)(3) with all guarantees and all investments in and loans to organizations covered by a guarantee and to related parties (subsidiaries and affiliates) excluded from its assets.

(d) *Guarantee document.* If the guarantee request is approved, a PSO must submit to HCFA a written guarantee document signed by an appropriate authority of the guarantor. The guarantee document must—

(1) State the financial obligation covered by the guarantee;

(2) Agree to—

(i) Unconditionally fulfill the financial obligation covered by the guarantee; and

(ii) Not subordinate the guarantee to any other claim on the resources of the guarantor;

(3) Declare that the guarantor must act on a timely basis, in any case not more than 5 business days, to satisfy the financial obligation covered by the guarantee; and

(4) Meet other conditions as HCFA may establish from time to time.

(e) *Reporting requirement.* A PSO must submit to HCFA the current internal financial statements and annual audited financial statements of the guarantor according to the schedule, manner, and form that HCFA requests.

(f) *Modification, substitution, and termination of a guarantee.* A PSO cannot modify, substitute or terminate a guarantee unless the PSO—

(1) Requests HCFA's approval at least 90 days before the proposed effective date of the modification, substitution, or termination;

(2) Demonstrates to HCFA's satisfaction that the modification, substitution, or termination will not result in insolvency of the PSO; and

(3) Demonstrates how the PSO will meet the requirements of this section.

(g) *Nullification.* If at any time the guarantor or the guarantee ceases to meet the requirements of this section, HCFA will notify the PSO that it ceases to recognize the guarantee document. In the event of this nullification, a PSO must—

(1) Meet the applicable requirements of this section within 15 business days; and

(2) If required by HCFA, meet a portion of the applicable requirements in less than the time period granted in paragraph (g)(1) of this section.

(Catalog of Federal Domestic Assistance Program No. 93.773, Medicare—Hospital Insurance; and Program No. 93.774, Medicare—Supplementary Medical Insurance Program)

Dated: April 20, 1998.

Nancy-Ann Min DeParle,

Administrator, Health Care Financing Administration.

Dated: April 28, 1998.

Donna E. Shalala,

Secretary.

[FR Doc. 98–12058 Filed 5–4–98; 11:09 am]

BILLING CODE 4120–01–P

federal register

Thursday
May 7, 1998

Part IV

Department of Defense

General Services Administration

National Aeronautics and Space Administration

48 CFR Part 1, et al.

Federal Acquisition Regulation; Review of FAR Representations; Proposed Rule

DEPARTMENT OF DEFENSE

GENERAL SERVICES ADMINISTRATION

NATIONAL AERONAUTICS AND SPACE ADMINISTRATION

48 CFR Parts 1, 4, 12, 14, 19, 26, 27, 32, 41, and 52

[FAR Case 96–013]

RIN 9000–AH97

Federal Acquisition Regulation; Review of FAR Representations

AGENCY: Department of Defense (DOD), General Services Administration (GSA), and National Aeronautics and Space Administration (NASA).

ACTION: Proposed rule.

SUMMARY: The Civilian Agency Acquisition Council and the Defense Acquisition Regulations Council are proposing to amend the Federal Acquisition Regulation (FAR) to remove or reduce certain requirements for representations and other statements from offerors and contractors. This regulatory action was not subject to Office of Management and Budget review under Executive Order 12866, dated September 30, 1993. This is not a major rule under 5 U.S.C. 804.

DATES: Comments should be submitted on or before July 6, 1998, to be considered in the formulation of a final rule.

ADDRESSES: Interested parties should submit written comments to: General Services Administration, FAR Secretariat (MVRS), 1800 F Street, NW, Room 4035, Washington, DC 20405.

E-mail comments submitted over Internet should be addressed to: farcase.96–013@gsa.gov.

Please cite FAR case 96–013 in all correspondence related to this case.

FOR FURTHER INFORMATION CONTACT: The FAR Secretariat, Room 4035, GS Building, Washington, DC 20405, (202) 501–4755 for information pertaining to status or publication schedules. For clarification of content, contact Mr. Paul Linfield, Procurement Analyst, at (202) 501–1757. Please cite FAR case 96–013.

SUPPLEMENTARY INFORMATION:

A. Background

This case was initiated in response to requests from industry to eliminate representations required by the FAR that place an unnecessary burden on offerors or contractors. This case proposes to—

1. Delete the clause at 52.214–17, Affiliated bidders.

2. Reduce the information collection requirements associated with the clauses at 52.204–5, Women-Owned Business; 52.212–3, Offeror Representations and Certifications—Commercial Items; 52.214–21, Descriptive Literature; and 52.241–1, Electric Service Territory Compliance Representation; and

3. Reduce the level of affirmation or substitute a contract requirement in the clauses at 52.216–2, Economic Price Adjustment—Standard Supplies; 52.216–3, Economic Price Adjustment—Semistandard Supplies; 52.222–43, Fair Labor Standards Act and Service Contracts Act—Price Adjustment (Multiple Year and Option Contracts); 52.222–44, Fair Labor Standards Act and Service Contract Act—Price Adjustment; 52.225–10, Duty-Free Entry; 52.226–1, Utilization of Indian Organizations and Indian-Owned Economic Enterprises; 52.227–15, Representation of Limited Rights Data and Restricted Computer Software; 52.228–8, Liability and Insurance—Leased Motor Vehicles; 52.228–9, Cargo Insurance; 52.229–3, Federal, State and Local Taxes; and 52.232–12, Advance Payments.

B. Regulatory Flexibility Act

This proposed rule is not expected to have a significant economic impact on a substantial number of small entities within the meaning of the Regulatory Flexibility Act, 5 U.S.C. 601, *et seq.* While it is expected to reduce the administrative burden associated with representation requirements, it does not significantly alter the type of information to be provided to the Government under the amended provisions and clauses. An Initial Regulatory Flexibility Analysis has, therefore, not been performed. Comments from small entities concerning the affected FAR subpart will be considered in accordance with 5 U.S.C. 610 of the Act. Such comments must be submitted separately and should cite 5 U.S.C. 601, *et seq.* (FAR case 96–013), in correspondence.

C. Paperwork Reduction Act

The Paperwork Reduction Act (44 U.S.C. 3501, *et seq.)* is deemed to apply because this proposed rule contains information collection requirements that will result in the reduction of approximately 119,150 hours as stated and approved under the following Office of Management and Budget (OMB) Control Numbers:

9000–0018, Certification of Independent Price Determination and Parent Company and Identifying Data (Deletion of 52.214–17, Affiliated Bidders.) Public reporting burden for this collection of information is estimated to average 0.1 hours per response, including the time for reviewing instruction, searching existing data sources, gathering and maintaining the data needed, and completing and reviewing the collection of information.

The annual reporting burden is estimated as follows:

Respondents	Responses per respondent	Total annual responses	Preparation hours per responses	Total response burden hours
64,250	20	1,285,000	.01	12,850

9000–0039, Descriptive Literature (Revision of 52.214–21, Descriptive Literature). Public reporting burden for this collection of information is estimated to average .157 hours per response, including the time for reviewing instruction, searching existing data sources, gathering and maintaining the data needed, and completing and reviewing the collection of information.

The annual reporting burden is estimated as follows:

Respondents	Responses per respondent	Total annual responses	Preparation hours per responses	Total response burden hours
3	2663	7989	.157	1.254

(c) *9000–0136, Solicitation/Contract/Order for Commercial Items (Revision of 52.212–3, Offeror Representations and Certifications—Commercial Items).* Public reporting burden for this collection of information is estimated to average

.74 hr. per response, including the time for reviewing instruction, searching existing data sources, gathering and maintaining the data needed, and completing and reviewing the collection of information.

The annual reporting burden is estimated as follows:

Respondents	Responses per respondent	Total annual responses	Preparation hours per responses	Total response burden hours
500,000	20	10,000,000	.74	7,394,050

(d) *9000–0126, Electric Service Territory Compliance Representation (Revision of 52.241–1, Electric Service Territory Representations.* Reduction from 500 hours to approximately 230 hours. A notice for public comment was published in the **Federal Register** at 63 FR 2218, January 14, 1998.

(e) Although OMB Clearance Number 9000–0145, use of Data Universal Numbering System (DUNS) as Primary Contractor Identification (FAR Case 95–307), ostensibly covers FAR clause 52.204–5, Women-Owned Business, the estimated burdens for that clearance appear to be based on the information collection requirements associated with use of the DUNS number. Therefore, although revisions to 52.204–5 will significantly reduce the number of responses required, we do not estimate any impact on the hours approved under 9000–0145.

Accordingly, a request for review of a revised information collection requirement concerning the OMB clearance numbers noted above were submitted to the Office of Management and Budget under 44 U.S.C. 3501, *et seq.*

D. Request for Comments Regarding Paperwork Burden

Members of the public are invited to comment on the recordkeeping and information collection requirements and estimates set forth above. Please send comments to: Office of Information and Regulatory Affairs, Office of Management and Budget, Attention: Mr. Peter N. Weiss, FAR Desk Officer, New Executive Office Building, Room 10102, 725 17th Street, NW. Washington, DC 20503.

Also send a copy of any comments to the FAR Secretariat at the address shown under **ADDRESSES.** Please cite the corresponding OMB Clearance Number in all correspondence related to the estimate.

List of Subjects in 48 CFR Parts 1, 4, 12, 14, 19, 26, 27, 32, 41, and 52

Government procurement.

Dated: May 1, 1998.

Edward C. Loeb,

Director, Federal Acquisition Policy Division.

Therefore, it is proposed that 48 CFR Parts 1, 4, 12, 14, 19, 26, 27, 32, 41, and 52 be amended as set forth below:

1. The authority citation for 48 CFR Parts 1, 4, 12, 14, 19, 26, 27, 32, 41, and 52 continues to read as follows:

Authority: 40 U.S.C. 486(c); 10 U.S.C. chapter 137; and 42 U.S.C. 2473(c).

PART 1—FEDERAL ACQUISITION REGULATIONS SYSTEM

2. Section 1.106 is amended in the table following the introductory paragraph by removing the FAR segment ''52.214–17'' and its corresponding OMB Control Number ''9000–0018''; and by adding, in numerical order, the following entries:

1.106 OMB Approval under the Paperwork Reduction Act.

FAR segment	OMB control No.
52.212–3	9000–0136
* * * * *	
52.241–1	9000–0126
* * * * *	

PART 4—ADMINISTRATIVE MATTERS

3. Section 4.603 is amended by revising paragraph (b) to read as follows:

4.603 Solicitation provisions.

* * * * *

(b) The contracting officer shall insert the provision at 52.204–5, Women-Owned Business (Other Than Small Business), in all solicitations that are not set aside for small business concerns and that exceed the simplified acquisition threshold, when the contract is to be performed inside the United States, its territories or possessions, Puerto Rico, the Trust Territory of the Pacific Islands, or the District of Columbia.

* * * * *

PART 12—ACQUISITION OF COMMERCIAL ITEMS

4. Section 12.503 is amended by revising paragraph (b)(5) to read as follows:

12.503 Applicability of certain laws to Executive agency contracts for the acquisition of commercial items.

* * * * *

(b) * * *

(5) 49 U.S.C. 40118, Requirement for a clause under the Fly American provisions (see 47.405).

* * * * *

PART 14—SEALED BIDDING

14.201–6 [Amended]

5. Section 14.201–6 is amended by removing and reserving paragraph (k).

14.405 [Amended]

6. Section 14.405 is amended in paragraph (d)(2) by inserting the word ''and'' at the end; by removing paragraph (e) and redesignating paragraph (f) as (e).

PART 19—SMALL BUSINESS PROGRAMS

7. Section 19.703 is amended by revising the last sentence of paragraph (b) to read as follows:

19.703 Eligibility requirements for participating in the program.

* * * * *

(b) * * * Protests challenging a subcontractor's representation of its status as a women-owned small business concern shall be filed in accordance with Small Business Administration procedures.

* * * * *

PART 26—OTHER SOCIOECONOMIC PROGRAMS

26.103 [Amended]

8. Section 26.103 is amended in paragraphs (a), (b), and (e) by removing ''self-certification'' and inserting ''representation''.

PART 27—PATENTS, DATA, AND COPYRIGHTS

9. Section 27.404 is amended by revising the first and second sentences

of paragraphs (d)(2) and of (e)(3) to read as follows:

27.404 Basic rights in data clause.

(d) * * *

(2) As an aid in determining whether the clause at 52.227–14 should be used with its Alternate II, the provision at 52.227–15, Statement of Limited Rights Data and Restricted Computer Software, may be included in any solicitation containing the clause at 52.227–14, Rights in Data—General. This provision requests that an offeror state in response to a solicitation, to the extent feasible, whether limited rights data are likely to be used in meeting the data delivery requirements set forth in the solicitation. * * *

* * * * *

(e) * * *

(3) As an aid in determining whether the clause should be used with its Alternate III, the provision at 52.227–15, Statement of Limited Rights Data and Restricted Computer Software, may be included in any solicitation containing the clause at 52.227–14, Rights in Data—General. This provision requests that an offeror state, in response to a solicitation, to the extent feasible, whether restricted computer software is likely to be sued in meeting the data delivery requirements set forth in the solicitation. * * *

* * * * *

10. Section 27.409 is amended by revising the first sentence of paragraph (g) to read as follows:

27.409 Solicitation provisions and contract clauses.

* * * * *

(g) In accordance with 27.404(d)(2), if the contracting officer desires to have an offeror state in response to a solicitation, to the extent feasible, whether limited rights data or restricted computer software are likely to be sued in meeting the data delivery requirements set forth in the solicitation, the contracting officer shall insert the provision at 52.227–15, Statement of Limited Rights Data and Restricted Computer Software, in any solicitation containing the clause at 52.227–14, Rights in Data—General. * * *

* * * * *

PART 32—CONTRACT FINANCING

11. Section 32.805 is amended by revising the introductory text of paragraph (a)(1), and paragraphs (a)(2) and (a)(3) to read as follows:

32.805 Procedure.

(a) *Assigments.* (1) Assignments by corporations shall be—

* * * * *

(2) Assignments by a partnership may be signed by one partner, if the assignment is accompanied by adequate evidence that the signer is a general partner of the partnership and is authorized to execute assignments on behalf on the partnership.

(3) Assignments by an individual must be signed by that individual and the signature acknowledged before a notary public or other person authorized to administer oaths.

* * * * *

PART 41—ACQUISITION OF UTILITY SERVICES

12. Section 41.201 is amended by revising the last two sentences of paragraph (e) to read as follows:

41.201 Policy.

* * * * *

(e) * * * Proposals from alternative electric suppliers must provide a representation that service can be provided in a manner consistent with section 8093 of Public Law 100–202 (see 41.201(d)).

PART 52—SOLICITATION PROVISIONS AND CONTRACT CLAUSES

13. Section 52.204–5 is revised to read as follows:

52.204–5 Women-Owned Business (Other Than Small Business).

As prescribed in 4.603(b), insert the following provision:

Women-Owned Business (Other Than Small Business) (Date)

(a) *Definition. women-owned business concern,* as used in this provision, means a concern which is at least 51 percent owned by one or more women; or in the case of any publicly owned business, at least 51 percent of the stock of which is owned by one or more women; and whose management and daily business operations are controlled by one or more women.

(b) *Representation.* [*Complete only if the offeror is a women-owned business concern and has not represented itself as a small business concern in paragraph (b)(1) of FAR 52.219–1, Small Business Program Representations, of this solicitation.*] The offeror represents that it is a women-owned business concern.

(End of provision)

14. Section 52.212–3 is amended by revising the date of the provision, and paragraphs (c)(2), (c)(3), and (c)(4) to read as follows:

52.212–3 Offeror Representations and Certifications—Commercial Items.

* * * * *

Offeror Representations and Certifications—Commercial Items (Date)

* * * * *

(c) * * *

(2) *Small disadvantaged business concern.* [*Complete only if the offeror represented itself as a small business concern in paragraph (c)(1) of this provision.*] The offeror represents that it is, is not a small disadvantaged business concern.

(3) *Women-owned small business concern.* [*Complete only if the offeror represented itself as a small business concern in paragraph (c)(1) of this provision.*] The offeror represents that it is, is not a women-owned small business concern.

* * * * *

(4) *Women-owned business concern (other than small business concern*). [*Complete only if the offeror is a women-owned business concern and did not represent itself as a small business concern in paragraph (c)(1) of this provision.*] The offeror represents that it is a women-owned business concern.

* * * * *

52.214–17 [Reserved]

15. Section 52.214–17 is removed and reserved.

16. Section 52.214–21 is amended by revising the introductory text of the provision; and by revising the date, introductory text, and paragraph (d) of Alternate I to read as follows:

52.214–21 Descriptive Literature.

As prescribed in 14.201–6(p)(1), insert the following provision:

* * * * *

Alternate I (DATE). As prescribed in 14.201–6(p)(2), add the following paragraphs (d) and (e) to the basic provision.

(d) The Contracting Officer may waive the requirement for furnishing descriptive literature if the bidder has supplied a product the same as that required by this solicitation under a prior contract. A bidder that requests a waiver of this requirement shall provide the following information.

Prior contract number

Date of prior contract _____

Contract line item number of product supplied _____

Name and address of Government activity to which delivery was made

_____

Date of final delivery of product supplied

_____

* * * * *

17. Section 52.216–2 is amended by revising the clause date and the first sentence of paragraph (a) to read as follows:

52.216–2 Economic Price Adjustment—Standard Supplies.

* * * * *

Economic Price Adjustment—Standard Supplies (Date)

(a) The Contractor states that the unit price in the Schedule for _____ [offeror insert

Schedule line item number] is not in excess of the Contractor's applicable established price in effect on the contract date for like quantities of the same item. * * *

* * * * *

18. Section 52.216–3 is amended by revising the clause date and paragraph (a) to read as follows:

52.216–3 Economic Price Adjustment—Semistandard Supplies.

* * * * *

Economic Price Adjustment—Semistandard Supplies (Date)

(a) The contractor states that the supplies identified as line items _____ [offeror insert Schedule line item number] in the Schedule are, except for modifications required by the contract specifications, supplies for which it has an established price. The term ''established price'' means a price that (1) is an established catalog or market price for a commercial item sold in substantial quantities to the general public, and (2) is the net price after applying any standard trade discounts offered by the Contractor. The Contractor further states that, as of the date of this contract, any difference between the unit prices in the contract for these line items and the Contractor's established prices for like quantities of the nearest commercial equivalents are due to compliance with contract specifications and with any contract requirements for preservation, packaging, and packing beyond standard commercial practice.

* * * * *

19. Section 52.219–1 is amended by revising the provision date, and the introductory text of paragraph (d)(2) to read as follows:

52.219–1 Small Business Program Representations.

* * * * *

Small Business Program Representations (Date)

* * * * *

(d) * * *

(2) Under 15 U.S.C. 645(d), any person who misrepresents a firm's status as a small, small disadvantaged, or women-owned small business concern in order to obtain a contract to be awarded under the preference programs established pursuant to section 8(a), 8(d), 9, or 15 of the Small Business Act or any other provision of Federal law that specifically references section 8(d) for a definition of program eligibility, shall—

* * * * *

52.219–21 [Amended]

20. Section 52.219–21 is amended by revising the provision date to read ''(Date)''; and by removing the statement ''Offeror represents as follows:'', which follows the first parenthetical.

52.222–43 [Amended]

21. Section 52.222–43 is amended by revising the date of the clause to ''read ''(Date)''; and in paragraph (b) by removing ''warrants'' and inserting ''states''.

52.222–44 [Amended]

22. Section 52.222–44 is amended by revising the date of the clause to read ''(Date)''; and in paragraph (b) by removing ''warrants'' and inserting ''states''.

23. Section 52.225–10 is amended by revising the introductory paragraph, the date of the clause, and paragraph (d); in paragraphs (g), (h), and (i), by removing ''agrees to'' and inserting ''shall''. The revised text reads as follows:

52.225–10 Duty-Free Entry.

As prescribed in 25.605, insert the following clause. When used in contracts of $100,000 or less, paragraphs (b)(1) and (i)(2) shall be modified to reduce the dollar figure.

* * * * *

Duty-Free Entry (Date)

* * * * *

(d) The Contractor shall—

(1) Claim duty-free entry only for supplies that are intended to be delivered to the Government or incorporated into the end items to be delivered under this contract; and

(2) Pay duty to the extent that these supplies, or any portion of them, are diverted to non-Governmental use, other than as scrap or salvage or as a result of a competitive sale authorized by the Contracting Officer.

* * * * *

24. Section 52.226–1 is amended by revising the clause date and the first two sentences of paragraph (c)(1) to read as follows:

52.226–1 Utilization of Indian Organizations and Indian-Owned Economic Enterprises.

* * * * *

Utilization of Indian Organizations and Indian-Owned Economic Enterprises (Date)

* * * * *

(c) * * *

(c) The Contracting Officer and the Contractor, acting in good faith, may rely on the representation of an Indian organization or Indian-owned economic enterprise as to its eligibility, unless an interested party challenges its status or the Contracting Officer has independent reason to question that status. In the event of a challenge to the representation of a subcontractor, the Contracting Officer shall refer the matter to the U.S. Department of the Interior, Bureau of Indian Affairs (BIA), Attn: Chief, Division of Contracting and Grants Administration, 1849 C Street, NW., MS–334A–SIB, Washington, DC 20245. * * *

* * * * *

25. Section 52.227–15 is revised to read as follows:

52.227–15 Statement of Limited Rights Data and Restricted Computer Software.

As prescribed in 27.409(b), insert the following provision:

Statement of Limited Rights Data and Restricted Computer Software (Date)

(a) This solicitation sets forth the work to be performed if a contract award results, and the Government's known delivery requirements for data (as defined in FAR 27.401). Any resulting contract may also provide the Government the option to order additional data under the Additional data Requirements clause at 52.227–16 of the FAR, if included in the contract. Any data delivered under the resulting contract will be subject to the Rights in Data-General clause at 52.227–14 that is to be included in this contract. Under the latter clause, a contractor may withhold from delivery data that qualify as limited rights data or restricted computer software, and deliver form, fit, and function data in lieu thereof. The latter clause also may be used with its alternates II and/or III to obtain delivery of limited rights data or restricted computer software, marked with limited rights or restricted rights notices, as appropriate. In addition, use of alternate V with this latter clause provides the Government the right to inspect such data at the Contractor's facility.

(b) As an aid in determining the Governments's need to include Alternate II or Alternate III in the clause at 52.227–14, Rights in Data—General, the offeror shall complete paragraph (c) of this provision to either state that none of the data qualify as limited rights data or restricted computer software, or identify, to the extent feasible, which of the data qualifies as limited rights data or restricted computer software. Any identification of limited rights data or restricted computer software in the offeror's response is not determinative of the status of such data should a contract be awarded to the offeror.

(c) The offeror has reviewed the requirements for the delivery of data or software and states [*offeror check appropriate block*]—

None of the data proposed for fulfilling such requirements qualifies as limited rights data or restricted computer software.

Data proposed for fulfilling such requirements qualify as limited rights data or restricted computer software and are identified as follows:

_____

Note: ''Limited rights data'' and ''Restricted computer software'' are defined in the contract clauses entitled ''Rights in Data-General''.

26. Section 52.228–8 is amended by revising the introductory paragraph, the data and paragraph (e) of the clause to read as follows:

52.228–8 Liability and Insurance—Leased Motor Vehicles.

As prescribed in 28.312, insert the following clause:

Liability and Insurance-Leased Motor Vehicles (Date)

* * * * *

(e) The contract price shall not include any cost for insurance or contingency to cover losses, damage, injury, or death for which the Government is responsible under paragraph (a) of this clause.

(End of clause)

27. Section 52.228–9 is revised to read as follows:

52.227–9 Cargo Insurance

As prescribed in 28.313(a), insert the following clause:

Cargo Insurance (Date)

(a) The Contractor, at the Contractor's expense, shall provide and maintain, during the continuance of this contract, cargo insurance of $_____ per vehicle to cover the value of property on each vehicle and of $_____ to cover the total value of the property in the shipment.

(b) All insurance shall be written on companies acceptable to _____ [*insert name of contracting agency], and policies shall include such terms and conditions as required by* _____ [insert name of contracting agency] before commencing operations under this contract.

(c) Each cargo insurance policy shall include the following statement:

''It is a condition of this policy that the Company shall furnish—

(1) Written notice to _____ [insert name and address of contracting agency], 30 days in advance of the effective date of any reduction in, or cancellation of, this policy; and

(2) Evidence of any renewal policy to the address specified in paragraph (a) of this statement, not less than 15 days prior to the expiration of any current policy on file with _____ [insert name of contracting agency].''

(End of clause)

52.229–3 [Amended]

28. Section 52.229–3 is amended by revising the date of the clause to read ''(DATE)''; and in paragraph (c) by removing ''warrants'' and inserting ''states''

29. Section 52.232–12 is amended—

(a) By revising the introductory text, the date, paragraph (j) and the introductory text of paragraph (o) of the clause;

(b) In paragraph (o)(8) by removing ''representations and'';

(c) By revising the date of Alternate V; and

(d) The date, paragraph (g), the introductory text of paragraph (l), and paragraph (l)(8) of the clause following Alternate V.

The revised text reads as follows:

52.232–12 Advance Payments.

As prescribed in 32.412(a), insert the following clause:

Advance Payments (Date)

* * * * *

(j) *Insurance.* The Contractor shall maintain with responsible insurance carriers (1) insurance on plant and equipment against fire and other hazards, to the extent that similar properties are usually insured by others operating plants and properties of similar character in the same general locality; (2) adequate insurance against liability on account of damage to persons or property; and (3) adequate insurance under all applicable workers' compensation laws. Until work under this contract has been completed and all advance payment made under the contract have been liquidated, the Contractor shall maintain this insurance; maintain adequate insurance on any materials, parts, assemblies, subassemblies, supplies, equipment, and other property acquired for or allocable to this contract and subject to the Government lien under paragraph (i) of this clause; and furnish any evidence with respect to its insurance that the administering office may require.

* * * * *

(o) *Warranties.* The Contractor warrants the following:

* * * * *

Alternate V (Date). * * *

* * * * *

Advance Payment Without Special Bank Account (Date)

* * * * *

(g) *Insurance.* The Contractor shall maintain with responsible insurance carriers (1) insurance on plant and equipment against fire and other hazards, to the extent that similar properties are usually insured by others operating plants and properties of similar character in the same general locality; (2) adequate insurance against liability on account of damage to persons or property; and (3) adequate insurance under all applicable workers' compensation laws. Until work under this contract has been completed and all advance payments made under the contract have been liquidated, the Contractor shall maintain this insurance; maintain adequate insurance on any materials, parts, assemblies, subassemblies, supplies, equipment, and other property acquired for or allocable to this contract and subject to the Government lien under paragraph (f) of this clause; and furnish any evidence with respect to its insurance that the administering office may require.

* * * * *

(1) *Warranties.* The Contractor warrants the following:

* * * * *

(8) These warranties shall be continuing and shall be considered to have been repeated by the submission of each invoice for advance payments.

* * * * *

30. Section 52.241–1 is revised to read as follows:

52.241–1 Electric Service Territory Compliance Representation.

As prescribed in 41.501(b), insert a provision substantially the same as the following:

Electric Service Territory Compliance Representation (Date)

(a) Section 8093 of Public Law 100–200 generally requires purchases of electricity by any department, agency, or instrumentality of the United States to be consistent with State law governing the provision of electric utility service, including State utility commission rulings and electric utility franchises or service territories established pursuant to State statute, State regulation, or State-approved territorial agreements.

(b) By signing this offer, the offeror represents that this offer to sell electricity is consistent with Section 8093 of Public Law 100–202.

(c) Upon request of the Contracting Officer, the offeror shall submit support legal and factual rationale for this representation.

(End of provision)

31. Section 52.247–63 is amended by revising the date and paragraph (c) of the clause to read as follows:

52.247–63 Preference for U.S.-Flag Air Carriers.

* * * * *

Preference for U.S.-Flag Air Carriers (Date)

* * * * *

(c) In performing work under this contract, the Contractor shall use U.S.-flag air carriers for international air transportation of personnel (and their personal effects) or property to the extent that service by those carriers is available.

* * * * *

[FR Doc. 98–2096 Filed 5–6–98; 8:45 am]

BILLING CODE 6820–EP–M

Reader Aids

Federal Register

Vol. 63, No. 88

Thursday, May 7, 1998

CUSTOMER SERVICE AND INFORMATION

Federal Register/Code of Federal Regulations

General Information, indexes and other finding aids	**202–523–5227**
Laws	**523–5227**

Presidential Documents

Executive orders and proclamations	**523–5227**
The United States Government Manual	**523–5227**

Other Services

Electronic and on-line services (voice)	**523–4534**
Privacy Act Compilation	**523–3187**
Public Laws Update Service (numbers, dates, etc.)	**523–6641**
TTY for the deaf-and-hard-of-hearing	**523–5229**

ELECTRONIC RESEARCH

World Wide Web

Full text of the daily Federal Register, CFR and other publications:

http://www.access.gpo.gov/nara

Federal Register information and research tools, including Public Inspection List, indexes, and links to GPO Access:

http://www.nara.gov/fedreg

E-mail

PENS (Public Law Electronic Notification Service) is an E-mail service that delivers information about recently enacted Public Laws. To subscribe, send E-mail to

listproc@lucky.fed.gov

with the text message:

subscribe publaws-l <firstname> <lastname>

Use listproc@lucky.fed.gov only to subscribe or unsubscribe to PENS. We cannot respond to specific inquiries at that address.

Reference questions. Send questions and comments about the Federal Register system to:

info@fedreg.nara.gov

The Federal Register staff cannot interpret specific documents or regulations.

FEDERAL REGISTER PAGES AND DATES, MAY

24097–24382 1
24383–24738 4
24739–24910 5
24911–25152 6
25153–25386 7

CFR PARTS AFFECTED DURING MAY

At the end of each month, the Office of the Federal Register publishes separately a List of CFR Sections Affected (LSA), which lists parts and sections affected by documents published since the revision date of each title.

3 CFR

Proclamations:
7088 24383
7089 25145
7090 25147
7091 25149
7092 25151

Executive Orders:
13081 24385

5 CFR

1605 24380

7 CFR

301 25153

Proposed Rules:
1 24467
210 24686
220 24686
271 24985
278 24985
279 24985
1710 24995
1714 24995

9 CFR

Proposed Rules:
130 24473

10 CFR

11 25156
25 25156

12 CFR

Ch. III 25157
Ch. VII 24097
703 24103
704 24103

13 CFR

120 24739

Proposed Rules:
120 24753

14 CFR

39 ..... 24210, 24387, 24389, 24740, 24742, 24911, 24913, 24914, 24915, 25158
71 ..... 24389, 24390, 24744, 24745
97 ..... 25160, 25161

Proposed Rules:
39 ..... 24136, 24138, 24756, 24758, 24760, 24762, 25179, 25180, 25182
71 ..... 24140, 24500, 24764, 24995

15 CFR

270 24917
911 24917

16 CFR

260 24240

Proposed Rules:
Ch. I 24996

17 CFR

4 24390

Proposed Rules:
1 24142

19 CFR

101 24746
351 24391
354 24391

20 CFR

404 24927
416 24927

21 CFR

184 24416
510 ..... 24105, 25163
522 ..... 24106, 24420
529 ..... 24105, 25163
556 24106
558 24420
801 24934

Proposed Rules:
101 ..... 24253, 24593
120 24253

22 CFR

41 24107

24 CFR

Proposed Rules:
203 24736
888 24846

26 CFR

Proposed Rules:
1 24765

28 CFR

51 24108

29 CFR

4231 24421

Proposed Rules:
1910 24501
2700 25183

30 CFR

203 24747

Proposed Rules:
218 25187
250 25187
256 25187

31 CFR

285 25136

32 CFR

706 24747

33 CFR

100 ..... 24109, 24425
117 24426
165 ..... 24109, 24425, 25164
207 24427

Proposed Rules:

100 25187
165 25189

36 CFR

223 24110

39 CFR

241 25166

40 CFR

51 24429
52 ..... 24114, 24115, 24434, 24435, 24748, 24935, 25167
60 24436
62 24841
63 ..... 24116, 24436, 24749
76 24116
80 24117
81 ..... 24445, 24748
85 24429
86 24446
148 24596
156 25168
180 ..... 24118, 24119, 24450, 24451, 24452, 24936, 24939, 24941, 24949, 24955
261 ..... 24976, 24963
268 24596
271 24453
279 24963
281 24453
300 25169
302 24596
721 24120

Proposed Rules:

22 25006
52 25191
59 25006
60 24515
63 ..... 24515, 24765
261 25006
279 25006

42 CFR

422 25360

44 CFR

206 24969

Proposed Rules:

206 ..... 24143, 25010

45 CFR

Proposed Rules:

142 25272

47 CFR

0 24121
1 ..... 24121, 24126
43 24120
63 24120
64 24120
68 25170
73 ..... 24454, 24970

Proposed Rules:

73 ..... 24517, 24518
76 24145

48 CFR

5243 24129
5252 24129

Proposed Rules:

1 25382
4 25382
12 25382
14 25382
19 25382
26 25382
27 25382
32 25382
41 25382
52 25382

49 CFR

223 24630
232 24130
239 24630
393 24454

Proposed Rules:

544 24519

50 CFR

17 25177
600 ..... 24212, 24970
660 ..... 24970, 24973
679 24984

Proposed Rules:

217 24148
300 24751
600 24522
622 24522

REMINDERS

The items in this list were editorially compiled as an aid to Federal Register users. Inclusion or exclusion from this list has no legal significance.

RULES GOING INTO EFFECT MAY 7, 1998

AGRICULTURE DEPARTMENT

Animal and Plant Health Inspection Service

Plant-related quarantine, domestic:

Pine shoot beetle; published 5-7-98

COMMERCE DEPARTMENT

Economic Analysis Bureau

International services surveys:

Foreign direct investments in U.S.—

BE-605 and BE-605 Bank, etc.; exemption levels; published 4-7-98

ENVIRONMENTAL PROTECTION AGENCY

Superfund program:

National oil and hazardous substances contingency plan—

National priorities list update; published 5-7-98

FEDERAL COMMUNICATIONS COMMISSION

Common carrier services:

Terminal equipment, connection to telephone network—

Customer-provided terminal equipment; terms and conditions; U.S. and Canadian requirements harmonization; correction; published 5-7-98

FEDERAL DEPOSIT INSURANCE CORPORATION

Development and review of regulations; policy statement; published 5-7-98

HEALTH AND HUMAN SERVICES DEPARTMENT

Food and Drug Administration

Animal drugs, feeds, and related products:

New drug applications—

Competitive exclusion culture; published 5-7-98

NUCLEAR REGULATORY COMMISSION

Criteria and procedures for determining eligibility for access to restricted data, etc.:

Fee schedule for licensee personnel; access authorization; published 5-7-98

POSTAL SERVICE

Organization and administration:

Post Office expansion, relocation, and construction; published 5-7-98

TRANSPORTATION DEPARTMENT

Federal Aviation Administration

Airworthiness directives:

Boeing; published 4-2-98

Dornier; published 4-2-98

McDonnell Douglas; published 4-2-98

COMMENTS DUE NEXT WEEK

AGRICULTURE DEPARTMENT

Agricultural Marketing Service

Raisins produced from grapes grown in California; comments due by 5-11-98; published 3-10-98

AGRICULTURE DEPARTMENT

Animal and Plant Health Inspection Service

National Poultry Improvement Plan:

Ostriches; comments due by 5-11-98; published 3-12-98

AGRICULTURE DEPARTMENT

Commodity Credit Corporation

Loan and purchase programs:

Cooperative marketing associations program; comments due by 5-11-98; published 4-9-98

COMMERCE DEPARTMENT

Census Bureau

Foreign trade statistics:

Foreign military sales shipments; value reporting requirement; comments due by 5-15-98; published 4-15-98

COMMERCE DEPARTMENT

National Oceanic and Atmospheric Administration

Fishery conservation and management:

Alaska; fisheries of Exclusive Economic Zone—

Gulf of Alaska groundfish; comments due by 5-15-98; published 4-30-98

Caribbean, Gulf, and South Atlantic fisheries—

Gulf of Mexico reef fish and red snapper; comments due by 5-14-98; published 4-14-98

West Coast States and Western Pacific fisheries—

Ocean salmon; comments due by 5-15-98; published 5-6-98

Western Pacific bottomfish; comments due by 5-11-98; published 3-26-98

COMMODITY FUTURES TRADING COMMISSION

Commodity Exchange Act:

Minimum financial requirements for futures commission merchants; comments due by 5-15-98; published 3-16-98

DEFENSE DEPARTMENT

Acquisition regulations:

Veterans employment emphasis; comments due by 5-11-98; published 3-11-98

Collection from third party payers of reasonable costs of healthcare services; comments due by 5-11-98; published 3-10-98

ENVIRONMENTAL PROTECTION AGENCY

Air programs; approval and promulgation; State plans for designated facilities and pollutants:

Pennsylvania; comments due by 5-11-98; published 4-10-98

Air quality implementation plans; approval and promulgation; various States:

Arkansas; comments due by 5-11-98; published 4-10-98

Pennsylvania; comments due by 5-11-98; published 4-10-98

Utah; comments due by 5-14-98; published 4-14-98

Toxic substances:

Testing requirements—

Biphenyl, etc.; clarification; comments due by 5-11-98; published 2-5-98

FEDERAL COMMUNICATIONS COMMISSION

Radio stations; table of assignments:

Indiana; comments due by 5-11-98; published 4-8-98

Tennessee; comments due by 5-11-98; published 4-8-98

Texas; comments due by 5-11-98; published 4-8-98

FEDERAL RESERVE SYSTEM

Consumer leasing (Regulation M):

Disclosure requirements; delivery by electronic communication; comments due by 5-15-98; published 3-25-98

Electronic fund transfers (Regulation E):

Disclosure requirements; delivery by electronic communication; comments due by 5-15-98; published 3-25-98

Point-of-sale debit card and foreign-initiated transactions; claims investigation extended time periods eliminated; comments due by 5-15-98; published 3-25-98

Equal credit opportunity (Regulation B):

Disclosure requirements; delivery by electronic communication; comments due by 5-15-98; published 3-25-98

Truth in lending (Regulation Z):

Disclosure requirements; delivery by electronic communication; comments due by 5-15-98; published 3-25-98

Truth in savings (Regulation DD):

Disclosure requirements; delivery by electronic communication; comments due by 5-15-98; published 3-25-98

GENERAL SERVICES ADMINISTRATION

Acquisition regulations:

Federal supply service contracts; 10-day payment clause; comments due by 5-15-98; published 3-16-98

HEALTH AND HUMAN SERVICES DEPARTMENT

Children and Families Administration

Personal Responsibility and Work Opportunity Reconciliation Act of 1996; implementation:

Computerized support enforcement systems; comments due by 5-11-98; published 3-25-98

HEALTH AND HUMAN SERVICES DEPARTMENT

Food and Drug Administration

Pharmaceuticals and medical devices; inspection and

evaluation reports; mutual recognition of FDA and European Community Member State conformity assessment
procedures; comments due by 5-11-98; published 4-10-98

HEALTH AND HUMAN SERVICES DEPARTMENT
Health Care Financing Administration
Medicare and Medicaid:
Physicians' referrals to health care entities with which they have financial relationships; comments due by 5-11-98; published 3-10-98

HOUSING AND URBAN DEVELOPMENT DEPARTMENT
Mortgage and loan insurance programs:
Home equity conversion mortgage program; consumer protection from excessive fees; comments due by 5-15-98; published 3-16-98

INTERIOR DEPARTMENT
Indian Affairs Bureau
Indian Self-Determination and Education Assistance Act:
Tribal self-governance program; comments due by 5-13-98; published 2-12-98

INTERIOR DEPARTMENT
Land Management Bureau
Minerals management:
Oil and gas leasing—
Federal oil and gas resources; protection against drainage by operations on nearby lands that would result in lower royalties from Federal leases; comments due by 5-15-98; published 2-24-98

INTERIOR DEPARTMENT
Fish and Wildlife Service
Endangered and threatened species:
Aleutian Canada goose; comments due by 5-11-98; published 4-9-98

INTERIOR DEPARTMENT
Minerals Management Service
Outer Continental Shelf; oil, gas, and sulphur operations:
Postlease operations safety; update and clarification; comments due by 5-14-98; published 2-13-98
Royalty management:
Oil value for royalty due on Indian leases; establishment; comments due by 5-13-98; published 4-9-98

INTERIOR DEPARTMENT
National Park Service
National Park System:
Glacier Bay National Park, AK; commercial fishing activities; comments due by 5-15-98; published 10-20-97

INTERIOR DEPARTMENT
Surface Mining Reclamation and Enforcement Office
Permanent program and abandoned mine land reclamation plan submissions:
Kentucky; comments due by 5-12-98; published 4-27-98
Mississippi; comments due by 5-14-98; published 4-14-98
Texas; comments due by 5-14-98; published 4-29-98

JUSTICE DEPARTMENT
Drug Enforcement Administration
Schedules of controlled substances:
Modafinil; placement into Schedule IV; comments due by 5-11-98; published 4-14-98

LABOR DEPARTMENT
Pension and Welfare Benefits Administration
Employee Retirement Income Security Act:
Employee benefit plans established or maintained pursuant to collective bargaining agreements; negotiated rulemaking advisory committee; intent to establish; comments due by 5-15-98; published 4-15-98

LIBRARY OF CONGRESS
Copyright Office, Library of Congress
Copyright office and procedures:
Special services; fees; comments due by 5-11-98; published 4-1-98

INTERIOR DEPARTMENT
National Indian Gaming Commission
Indian Gaming Regulatory Act:
Class II gaming operations; tribal self-regulation; certification process; comments due by 5-11-98; published 3-12-98
Class III gaming operations; tribal self-regulation; certification process; comments due by 5-11-98; published 3-12-98

SMALL BUSINESS ADMINISTRATION
Small business size standards:
Nonmanufacturer rule; waivers—
Towers, telephone and telegraph apparatus, etc.; comments due by 5-14-98; published 4-23-98

SOCIAL SECURITY ADMINISTRATION
Social security benefits:
Federal old age, survivors and disability insurance—
Endocrine system and obesity impairments; revised medical criteria for determining disability; comments due by 5-11-98; published 3-11-98

TRANSPORTATION DEPARTMENT
Coast Guard
Alternative convention tonnage thresholds; comments due by 5-15-98; published 2-4-98
Drawbridge operations:
New Jersey; comments due by 5-11-98; published 4-10-98
Ports and waterways safety:
Prince William Sound, AK; port access route study; comments due by 5-11-98; published 2-9-98
Tank vessels:
Towing vessel safety; meetings; comments due by 5-11-98; published 2-27-98

TRANSPORTATION DEPARTMENT
Federal Aviation Administration
Airworthiness directives:
de Havilland; comments due by 5-13-98; published 4-13-98
AERMACCHI, S.p.A.; comments due by 5-12-98; published 4-13-98
Aerospatiale; comments due by 5-11-98; published 4-10-98
Airbus; comments due by 5-14-98; published 4-14-98
Avions Pierre Robin; comments due by 5-15-98; published 4-20-98
Boeing; comments due by 5-11-98; published 3-26-98
Bombardier; comments due by 5-14-98; published 4-14-98
British Aerospace; comments due by 5-11-98; published 4-9-98
CASA; comments due by 5-11-98; published 4-9-98
Cessna; comments due by 5-15-98; published 3-19-98
Construcciones Aeronauticas, S.A.; comments due by 5-14-98; published 4-14-98
Empresa Brasileira de Aeronautica S.A.; comments due by 5-15-98; published 3-16-98
Eurocopter France; comments due by 5-12-98; published 3-13-98
Fokker; comments due by 5-15-98; published 4-15-98
GKN Westland Helicopters Ltd.; comments due by 5-15-98; published 3-16-98
Industrie Aeronautiche e Meccaniche (I.A.M.) Model Piaggio P-180 airplanes; comments due by 5-11-98; published 3-11-98
Lucas Air; comments due by 5-11-98; published 4-10-98
McDonnell Douglas; comments due by 5-11-98; published 3-26-98
Mitsubishi; comments due by 5-11-98; published 4-14-98
Class D airspace; comments due by 5-11-98; published 4-10-98
Class E airspace; comments due by 5-11-98; published 3-23-98

TRANSPORTATION DEPARTMENT
National Highway Traffic Safety Administration
Consumer information:
Utility vehicle label; comments due by 5-13-98; published 4-13-98
Motor vehicle safety standards:
Hydraulic brake systems—
Antilock brake system; equipment in medium and heavy vehicles; comments due by 5-15-98; published 3-16-98

TRANSPORTATION DEPARTMENT
Research and Special Programs Administration
Pipeline safety:
Liquefied natural gas facilities; safety standards—
National Fire Protection Association standard for production, storage, and handling of liquefied natural gas; meeting;

comments due by 5-15-98; published 2-5-98

VETERANS AFFAIRS DEPARTMENT

Acquisition regulations:

Sealed bidding and competitive proposals; comments due by 5-11-98; published 3-11-98

LIST OF PUBLIC LAWS

This is a continuing list of public bills from the current session of Congress which have become Federal laws. It may be used in conjunction with ''P L U S'' (Public Laws Update Service) on 202–523–6641. This list is also available online at http://www.nara.gov/fedreg.

The text of laws is not published in the **Federal Register** but may be ordered in ''slip law'' (individual pamphlet) form from the Superintendent of Documents, U.S. Government Printing Office, Washington, DC 20402 (phone, 202–512–1808). The text will also be made available on the Internet from GPO Access at http://www.access.gpo.gov/su_docs/. Some laws may not yet be available.

H.R. 3579/P.L. 105–174

1998 Supplemental Appropriations and Rescissions Act (May 1, 1998; 112 Stat. 58)

Last List April 29, 1998

Public Laws Electronic Notification Service (PENS)

PENS is a free electronic mail notification service of newly enacted public laws. To subscribe, send E-mail to **listproc@lucky.fed.gov** with the text message: **subscribe PUBLAWS-L** Your Name

Note: This service is strictly for E-mail notification of new public laws. The text of laws is not available through this service. **PENS** cannot respond to specific inquiries sent to this address.