5–27–98
Vol. 63 No. 101
Pages 28889–29088

federal register

Wednesday
May 27, 1998

Briefings on how to use the Federal Register
For information on briefings in Washington, DC, and Chicago, IL, see announcement on the inside cover of this issue.

Now Available Online via
GPO Access

Free online access to the official editions of the *Federal Register, the Code of Federal Regulations* and other Federal Register publications is available on *GPO Access*, a service of the U.S. Government Printing Office at:

http://www.access.gpo.gov/nara/index.html

For additional information on ***GPO Access*** products, services and access methods, see page II or contact the *GPO Access* User Support Team via:

- ★ Phone: toll-free: 1-888-293-6498
- ★ Email: gpoaccess@gpo.gov

The **FEDERAL REGISTER** is published daily, Monday through Friday, except official holidays, by the Office of the Federal Register, National Archives and Records Administration, Washington, DC 20408, under the Federal Register Act (44 U.S.C. Ch. 15) and the regulations of the Administrative Committee of the Federal Register (1 CFR Ch. I). The Superintendent of Documents, U.S. Government Printing Office, Washington, DC 20402 is the exclusive distributor of the official edition.

The **Federal Register** provides a uniform system for making available to the public regulations and legal notices issued by Federal agencies. These include Presidential proclamations and Executive Orders, Federal agency documents having general applicability and legal effect, documents required to be published by act of Congress, and other Federal agency documents of public interest.

Documents are on file for public inspection in the Office of the Federal Register the day before they are published, unless the issuing agency requests earlier filing. For a list of documents currently on file for public inspection, see http://www.nara.gov/fedreg.

The seal of the National Archives and Records Administration authenticates the Federal Register as the official serial publication established under the Federal Register Act. Under 44 U.S.C. 1507, the contents of the **Federal Register** shall be judicially noticed.

The **Federal Register** is published in paper and on 24x microfiche. It is also available online at no charge as one of the databases on GPO Access, a service of the U.S. Government Printing Office.

The online edition of the **Federal Register** is issued under the authority of the Administrative Committee of the Federal Register as the official legal equivalent of the paper and microfiche editions (44 U.S.C. 4101 and 1 CFR 5.10). It is updated by 6 a.m. each day the **Federal Register** is published and it includes both text and graphics from Volume 59, Number 1 (January 2, 1994) forward.

GPO Access users can choose to retrieve online **Federal Register** documents as TEXT (ASCII text, graphics omitted), PDF (Adobe Portable Document Format, including full text and all graphics), or SUMMARY (abbreviated text) files. Users should carefully check retrieved material to ensure that documents were properly downloaded.

On the World Wide Web, connect to the **Federal Register** at http://www.access.gpo.gov/nara. Those without World Wide Web access can also connect with a local WAIS client, by Telnet to swais.access.gpo.gov, or by dialing (202) 512-1661 with a computer and modem. When using Telnet or modem, type swais, then log in as guest with no password.

For more information about GPO Access, contact the GPO Access User Support Team by E-mail at gpoaccess@gpo.gov; by fax at (202) 512–1262; or call (202) 512–1530 or 1–888–293–6498 (toll free) between 7 a.m. and 5 p.m. Eastern time, Monday–Friday, except Federal holidays.

The annual subscription price for the **Federal Register** paper edition is $555, or $607 for a combined **Federal Register,** Federal Register Index and List of CFR Sections Affected (LSA) subscription; the microfiche edition of the **Federal Register** including the Federal Register Index and LSA is $220. Six month subscriptions are available for one-half the annual rate. The charge for individual copies in paper form is $8.00 for each issue, or $8.00 for each group of pages as actually bound; or $1.50 for each issue in microfiche form. All prices include regular domestic postage and handling. International customers please add 25% for foreign handling. Remit check or money order, made payable to the Superintendent of Documents, or charge to your GPO Deposit Account, VISA, MasterCard or Discover. Mail to: New Orders, Superintendent of Documents, P.O. Box 371954, Pittsburgh, PA 15250–7954.

There are no restrictions on the republication of material appearing in the **Federal Register.**

How To Cite This Publication: Use the volume number and the page number. Example: 63 FR 12345.

SUBSCRIPTIONS AND COPIES

PUBLIC	
Subscriptions:	
Paper or fiche	**202–512–1800**
Assistance with public subscriptions	**512–1806**
General online information	**202–512–1530; 1–888–293–6498**
Single copies/back copies:	
Paper or fiche	**512–1800**
Assistance with public single copies	**512–1803**
FEDERAL AGENCIES	
Subscriptions:	
Paper or fiche	**523–5243**
Assistance with Federal agency subscriptions	**523–5243**

FEDERAL REGISTER WORKSHOP

THE FEDERAL REGISTER: WHAT IT IS AND HOW TO USE IT

FOR: Any person who uses the Federal Register and Code of Federal Regulations.

WHO: Sponsored by the Office of the Federal Register.

WHAT: Free public briefings (approximately 3 hours) to present:

1. The regulatory process, with a focus on the Federal Register system and the public's role in the development regulations.
2. The relationship between the Federal Register and Code of Federal Regulations.
3. The important elements of typical Federal Register documents.
4. An introduction to the finding aids of the FR/CFR system.

WHY: To provide the public with access to information necessary to research Federal agency regulations which directly affect them. There will be no discussion of specific agency regulations.

WASHINGTON, DC

WHEN: June 16, 1998 at 9:00 am.

WHERE: Office of the Federal Register
Conference Room
800 North Capitol Street, NW.
Washington, DC
(3 blocks north of Union Station Metro)

RESERVATIONS: 202–523–4538

CHICAGO, IL

WHEN: June 23, 1998 from 9:00 am to Noon

WHERE: Ralph H. Metcalfe Federal Building
Conference Room 328
77 W. Jackson
Chicago, IL
Federal Information Center

RESERVATIONS: 1–800–688–9889 x0

Printed on recycled paper containing 100% post consumer waste

Contents

Federal Register

Vol. 63, No. 101

Wednesday, May 27, 1998

Administration on Aging
See Aging Administration

Aging Administration
NOTICES
Agency information collection activities:
Submission for OMB review; comment request, 29014

Agriculture Department
See Animal and Plant Health Inspection Service
See Commodity Credit Corporation
See Food Safety and Inspection Service
See Foreign Agricultural Service
See Rural Housing Service

Animal and Plant Health Inspection Service
PROPOSED RULES
Veterinary diagnostic services; user fees
Correction, 29061

Army Department
See Engineers Corps
NOTICES
Agency information collection activities:
Proposed collection; comment request, 28996–28997

Centers for Disease Control and Prevention
NOTICES
Agency information collection activities:
Proposed collection; comment request, 29014–29016

Coast Guard
RULES
Ports and waterways safety:
Greenwood Lake, NJ; safety zone
Correction, 29061

Commerce Department
See Economics and Statistics Administration
See National Institute of Standards and Technology
See National Oceanic and Atmospheric Administration
See National Telecommunications and Information Administration

Committee for the Implementation of Textile Agreements
NOTICES
Cotton, wool, and man-made textiles:
Indonesia, 28995
Thailand, 28996

Commodity Credit Corporation
NOTICES
Agricultural conservation programs:
Conservation reserve program—
Conservation Reserve Enhancement Program; State and Federal resource partnership, 28965–28966

Defense Department
See Army Department
See Engineers Corps
RULES
Acquisition regulations:
Miscellaneous amendments
Correction, 29061

Economics and Statistics Administration
NOTICES
Meetings:
2000 Census Advisory Committee, 28985

Education Department
NOTICES
Agency information collection activities:
Proposed collection; comment request, 28998
Grants and cooperative agreements; availability, etc.:
Special education and rehabilitative serives—
Personnel preparation to improve services and results for children with disabilities and training and information for parents of children with disabilities, 29064–29068

Energy Department
See Federal Energy Regulatory Commission
NOTICES
Meetings:
Environmental Management Site-Specific Advisory Board—
Kirtland Area Office (Sandia), 28998–28999
Rocky Flats, 28999

Engineers Corps
NOTICES
Environmental statements; availability, etc.:
Ma'alaea Harbor, HI; navigation improvement project, 28997–28998

Environmental Protection Agency
RULES
Air programs; State authority delegations:
Nevada, 28906–28909
Air quality implementation plans; approval and promulgation; various States:
Arizona, 28898–28904
Florida, 28905–28906
Pesticides; tolerances in food, animal feeds, and raw agricultural commodities:
Tolerance processing fees increase, 28909–28911
PROPOSED RULES
Air programs; State authority delegations:
Nevada, 28960–28961
Air quality implementation plans; approval and promulgation; various States:
California, 28958–28960
Florida, 28960
Superfund program:
National oil and hazardous substances contingency plan—
National priorities list update, 28961–28963
NOTICES
Agency information collection activities:
Proposed collection; comment request, 29007
Submission for OMB review; comment request, 29007–29008

Meetings:
Science Advisory Board, 29008–29011
Solid wastes:
Salt River Municipal Solid Waste Landfill, AZ; alternative liner system design and alternative daily cover material use; tentative approval, 29011

Executive Office of the President
See Presidential Documents
See Trade Representative, Office of United States

Federal Aviation Administration
RULES
Airworthiness standards:
Transport category airplanes—
Braked roll conditions, 29070–29073
Class E airspace, 28891–28893
PROPOSED RULES
Class E airspace; correction, 29061
Compatible land use planning initiative
Correction, 29061
NOTICES
Grants and cooperative agreements; availability, etc.:
Military airport program, 29055–29058
Meetings:
RTCA, Inc., 29058
Passenger facility charges; applications, etc.:
Manchester Airport, NH, 29058

Federal Communications Commission
NOTICES
Agency information collection activities:
Proposed collection; comment request, 29011–29012

Federal Energy Regulatory Commission
NOTICES
Agency information collection activities:
Proposed collection; comment request, 28999–29001
Electric rate and corporate regulation filings:
Orzunil I de Electricdad, Limitada, et al., 29003–29007
Applications, hearings, determinations, etc.:
EnerStar Power Corp., 29001
LSP Energy L.P., 29001–29002
NorAm Gas Transmission Co., 29002
Northern Natural Gas Co., 29002–29003
Tennessee Gas Pipeline Co., 29003
Williams Energy Services Co., 29003

Federal Highway Administration
NOTICES
Environmental statements; notice of intent:
Gasconade and Montgomery Counties, MO, 29059

Federal Maritime Commission
NOTICES
Freight forwarder licenses:
Florida International Forwarders, Inc., et al., 29013

Federal Reserve System
NOTICES
Banks and bank holding companies:
Formations, acquisitions, and mergers, 29013
Meetings; Sunshine Act, 29013

Fish and Wildlife Service
PROPOSED RULES
Endangered and threatened species:
Findings on petitions, etc.—
Stone Mountain fairy shrimp, 28963–28964
NOTICES
Environmental statements; availability, etc.:
Incidental take permits—
Natomas Basin Area, Sacramento and Sutter Counties, CA; giant garter snake, etc., 29020–29021
Santa Cruz County, CA; Mount Hermon June beetle, etc., 29021–29022
Grants and cooperative agreements; availability, etc.:
National Sea Grant College program; regional nonindigenous species research and outreach, etc., 28989–28994

Food and Drug Administration
RULES
GRAS or prior-sanctioned ingredients:
Sheanut oil, 28893–28895
NOTICES
Grants and cooperative agreements; availability, etc.:
Food safety; foodborne illness reduction; research, 29016–29019
Microbial risk assessment modeling for food; development research studies; correction, 29020

Food Safety and Inspection Service
NOTICES
Codex Alimentarius Commission:
International sanitary and phytosanitary standard-setting activities, 28966–28983

Foreign Agricultural Service
NOTICES
North American Free Trade Agreement (NAFTA):
Frozen concentrated orange juice from Mexico; temporary duty imposition, 28983–28984

Foreign Assets Control Office
RULES
Sanctions; blocked persons, specially designated nationals, terrorists, and narcotics traffickers, and blocked vessels; lists consolidation, 28896–28898

Foreign Claims Settlement Commission
NOTICES
Meetings; Sunshine Act, 29024

General Accounting Office
NOTICES
Meetings; Sunshine Act, 29013–29014

Health and Human Services Department
See Aging Administration
See Centers for Disease Control and Prevention
See Food and Drug Administration
See Substance Abuse and Mental Health Services Administration

Immigration and Naturalization Service
NOTICES
Agency information collection activities:
Proposed collection; comment request, 29024–29025

Indian Affairs Bureau
NOTICES
Agency information collection activities:
Submission for OMB review; comment request, 29022–29023

Interior Department
See Fish and Wildlife Service

See Indian Affairs Bureau
See Minerals Management Service

Internal Revenue Service
PROPOSED RULES
Income taxes:
Qualified zone academy bonds; cross-reference
Hearing cancellation, 28958

International Boundary and Water Commission, United States and Mexico
NOTICES
Meetings, 29020

International Development Cooperation Agency
See Overseas Private Investment Corporation

International Trade Commission
NOTICES
Meetings; Sunshine Act, 29024

Justice Department
See Foreign Claims Settlement Commission
See Immigration and Naturalization Service
See Justice Programs Office

Justice Programs Office
NOTICES
Grants and cooperative agreements; availability, etc.:
National criminal history improvement program, 29025–29033

Labor Department
See Mine Safety and Health Administration
See Occupational Safety and Health Administration
NOTICES
Agency information collection activities:
Submission for OMB review; comment request, 29033–29034

Mexico and United States, International Boundary and Water Commission
See International Boundary and Water Commission, United States and Mexico

Minerals Management Service
NOTICES
Outer Continental Shelf operations:
Central Gulf of Mexico—
Lease sales, 29023

Mine Safety and Health Administration
NOTICES
Safety standard petitions:
Lodestar Energy, Inc., et al., 29034–29035

National Archives and Records Administration
NOTICES
Agency information collection activities:
Proposed collection; comment request, 29036–29037

National Credit Union Administration
NOTICES
Meetings; Sunshine Act, 29037

National Highway Traffic Safety Administration
RULES
Motor vehicle safety standards:
Metric conversion—
Tire standards, 28912–28922
Weights and measures systems, 28922–28957
NOTICES
Motor vehicle safety standards; exemption petitions, etc.:
Cooper Tire & Rubber Co., 29059–29060

National Institute of Standards and Technology
NOTICES
Meetings:
Malcolm Baldrige National Quality Awards—
Board of Overseers, 28985–28986
Panel of Judges, 28986

National Oceanic and Atmospheric Administration
NOTICES
Fishery conservation and management:
Halibut and sablefish fisheries quota-share loan program, 28986–28989
Grants and cooperative agreements; availability, etc.:
National Sea Grant College program; regional nonindigenous species research and outreach, etc., 28989–28994
Meetings:
North Pacific Fishery Management Council, 28994–28995

National Telecommunications and Information Administration
NOTICES
Grants and cooperative agreements; availability, etc.:
Public telecommunications facilities and and Pan-Pacific education and communications experiments by satellite programs, 29076–29088

Nuclear Regulatory Commission
NOTICES
Environmental statements; availability, etc.:
Carolina Power & Light Co., 29039–29041
Applications, hearings, determinations, etc.:
Niagara Mohawk Power Corp.; correction, 29037
PECO Energy Co., 29037–29038
Philadelphia Electric Co., 29038–29039

Occupational Safety and Health Administration
NOTICES
Meetings:
Environmental tobacco smoke exposure in hospitality industry; ventilation engineering controls; technical workshop, 29035–29036

Office of United States Trade Representative
See Trade Representative, Office of United States

Overseas Private Investment Corporation
NOTICES
Meetings; Sunshine Act, 29023–29024

Personnel Management Office
RULES
Health benefits, Federal employees:
Minimum salary requirement removed, 28891
NOTICES
Agency information collection activities:
Proposed collection; comment request, 29041

Meetings:
Federal Prevailing Rate Advisory Committee, 29041–29042

Presidential Documents
PROCLAMATIONS
Special observances:
Prayer for Peace, Memorial Day (Proc. 7099), 28889

Public Health Service
See Centers for Disease Control and Prevention
See Food and Drug Administration
See Substance Abuse and Mental Health Services Administration

Railroad Retirement Board
NOTICES
Agency information collection activities:
Submission for OMB review; comment request, 29042 , 29042

Rural Housing Service
NOTICES
Agency information collection activities:
Proposed collection; comment request, 28984–28985

Securities and Exchange Commission
NOTICES
Self-regulatory organizations; proposed rule changes:
National Association of Securities Dealers, Inc., 29050–29051
Applications, hearings, determinations, etc.:
Cowen & Co. et al., 29042–29044
Mitchell Hutchins Portfolios et al., 29044–29046
Stein Roe Income Trust et al., 29046–29048
UBS Investor Portfolios Trust et al., 29048–29050

Sentencing Commission, United States
See United States Sentencing Commission

Social Security Administration
NOTICES
Agency information collection activities:
Proposed collection; comment request, 29051–29053

Substance Abuse and Mental Health Services Administration
NOTICES
Grants and cooperative agreements; availability, etc.:
Center for Mental Health Services and Center for Substance Abuse Treatment activities, 29020

Surface Transportation Board
NOTICES
Railroad operation, acquisition, construction, etc.:
Capital Metropolitan Transportation Authority, 29060

Textile Agreements Implementation Committee
See Committee for the Implementation of Textile Agreements

Trade Representative, Office of United States
NOTICES
Intellectual property rights protection, countries denying; policies and practices:
India, 29053

Transportation Department
See Coast Guard
See Federal Aviation Administration
See Federal Highway Administration
See National Highway Traffic Safety Administration
See Surface Transportation Board
RULES
Marine equipment transfer to ship operators and shipyards; CFR part removed, 28911–28912
NOTICES
Agency information collection activities:
Submission for OMB review; comment request, 29053–29055

Treasury Department
See Foreign Assets Control Office
See Internal Revenue Service

United States Sentencing Commission
NOTICES
Sentencing guidelines and policy statements for Federal courts, 29051

Separate Parts In This Issue

Part II
Department of Education, 29064–29068

Part III
Department of Transportation, 29070–29073

Part IV
Department of Commerce, National Telecommunications and Information Administration, 29076–29088

Reader Aids
Consult the Reader Aids section at the end of this issue for phone numbers, online resources, finding aids, reminders, and notice of recently enacted public laws.

CFR PARTS AFFECTED IN THIS ISSUE

A cumulative list of the parts affected this month can be found in the Reader Aids section at the end of this issue.

3 CFR
Proclamations:
7099.....28889

5 CFR
890.....28891

9 CFR
Proposed Rules:
130.....29061

14 CFR
25.....29070
71.....28891
Proposed Rules:
71.....29061
91.....29061
150.....29061

21 CFR
184.....28893

26 CFR
Proposed Rules:
1.....28958

31 CFR
Ch. V.....28896

33 CFR
165.....29061

40 CFR
52 (2 documents) 28898, 28905
63.....28906
180.....28909
Proposed Rules:
52 (2 documents) 28958, 28960
63.....28960
300.....28961

46 CFR
360.....28911

48 CFR
252.....29061

49 CFR
571 (2 documents) 28912, 28922

50 CFR
Proposed Rules:
17.....28963

Federal Register
Vol. 63, No. 101
Wednesday, May 27, 1998

Presidential Documents

Title 3—

The President

Proclamation 7099 of May 22, 1998

Prayer For Peace, Memorial Day, 1998

By the President of the United States of America

A Proclamation

Today Americans live in a time of great hope. Our Nation is free, prosperous, and at peace. While very real dangers and problems still exist in the world, the Cold War is over, democracy is sweeping the globe, and old adversaries are forming new partnerships.

But the blessings we enjoy today are not the happy accidents of history; they are the culmination of promises kept by generations of young Americans and paid for by their courage and sacrifice. The promise of freedom articulated in our Declaration of Independence was made real by a ragtag army of brave Americans who were prepared to die for their convictions. The promise of unity was kept during the Civil War by thousands of Americans, black and white, who were willing to fight to preserve our Union. The promise of democracy was kept by the hundreds of thousands of Americans who fought and died in World War I, World War II, Korea, Vietnam, and the Persian Gulf. On home soil and in foreign lands, lost at sea or brought down from the skies, our young men and women in uniform have given their lives to keep their promise to America: to defend our freedom, to preserve our values, and to advance the ideals of democracy.

On this Memorial Day, we, too, have promises to keep. We remember and honor all those gallant Americans who, in the eloquent words of President Lincoln, ''gave the last full measure of devotion'' for the well-being of our Nation and their fellow citizens. We express our profound sympathy and gratitude to the families who have lost their sons and daughters in service to America. We promise to keep faith with all those who have died for our country by remaining vigilant in our defense of freedom and democracy. And we promise always to work for permanent peace in the world so that a new generation of Americans will never have to know the horrors of war.

In respect and recognition of the courageous men and women to whom we pay tribute, the Congress, by joint resolution approved on May 11, 1950 (64 Stat. 158), has requested the President to issue a proclamation calling upon the people of the United States to observe each Memorial Day as a day of prayer for permanent peace and designating a period on that day when the American people might unite in prayer.

NOW, THEREFORE, I, WILLIAM J. CLINTON, President of the United States of America, do hereby proclaim Memorial Day, May 25, 1998, as a day of prayer for permanent peace, and I designate the hour beginning at 3:00 p.m. EDT of that day as a time to join in prayer. I urge the press, radio, television, and all other information media to take part in this observance.

I also request the Governors of the United States and the Commonwealth of Puerto Rico, and the appropriate officials of all units of government, to direct that the flag be flown at half-staff during this Memorial Day on all buildings, grounds, and naval vessels throughout the United States and in all areas under its jurisdiction and control, and I request the people of the United States to display the flag at half-staff from their homes for the customary forenoon period.

IN WITNESS WHEREOF, I have hereunto set my hand this twenty-second day of May, in the year of our Lord nineteen hundred and ninety-eight, and of the Independence of the United States of America the two hundred and twenty-second.

William J. Clinton

[FR Doc. 98–14165
Filed 5–26–98; 8:45 am]
Billing code 3195–01–P

Rules and Regulations

Federal Register
Vol. 63, No. 101
Wednesday, May 27, 1998

This section of the FEDERAL REGISTER contains regulatory documents having general applicability and legal effect, most of which are keyed to and codified in the Code of Federal Regulations, which is published under 50 titles pursuant to 44 U.S.C. 1510.

The Code of Federal Regulations is sold by the Superintendent of Documents. Prices of new books are listed in the first FEDERAL REGISTER issue of each week.

OFFICE OF PERSONNEL MANAGEMENT

5 CFR Part 890

RIN 3206–AI05

Federal Employees Health Benefits Program: Removal of Minimum Salary Requirement

AGENCY: Office of Personnel Management.

ACTION: Final rule.

SUMMARY: The Office of Personnel Management (OPM) is issuing a final rule to remove an obsolete provision that prohibits an employee whose annual salary is $350 or less from enrolling in the Federal Employees Health Benefits (FEHB) Program.

EFFECTIVE DATE: June 26, 1998.

FOR FURTHER INFORMATION CONTACT: Kenneth A. Lease, 202–606–0004.

SUPPLEMENTARY INFORMATION: On January 6, 1998, OPM published a proposed rule in the **Federal Register** (63 FR 446) to remove an obsolete provision that prohibits an employee earning $350 or less per year from enrolling in the FEHB Program. This provision was based on the fact that, until they were amended in 1982, FEHB regulations required that employee contributions to premiums could only be made by salary withholding while an employee was in a pay status. ($350 is the amount which, when the Program began in 1960, was sufficient to cover the appropriate employee contributions for the least costly FEHB plan.) As amended in August 1982, however, the regulations now require enrollee contributions, by direct payment if necessary, for all periods during which coverage continues, even periods during which an employee does not receive pay (such as a leave without pay situation).

We also proposed to amend the reference in the definition of *letter of credit* under § 890.101 to conform to a recent reference change in Chapter 16 of title 48, Code of Federal Regulations (FEHBAR).

We received no comments.

Regulatory Flexibility Act

I certify that this regulation will not have a significant economic impact on a substantial number of small entities because it primarily affects Federal employees.

List of Subjects in 5 CFR Part 890

Administrative practice and procedure, Government employees, Health facilities, Health insurance, Health professions, Hostages, Iraq, Kuwait, Lebanon, Reporting and recordkeeping requirements, Retirement.

Office of Personnel Management.

Janice R. Lachance,

Director.

Accordingly, OPM is amending 5 CFR part 890 as follows:

PART 890—FEDERAL EMPLOYEES HEALTH BENEFITS PROGRAM

1. The authority citation for part 890 continues to read as follows:

Authority: 5 U.S.C. 8913; § 890.803 also issued under 50 U.S.C. 403p, 22 U.S.C. 4069c and 4069c–1; subpart L also issued under sec. 599C of Pub. L. 101–513, 104 Stat. 2064, as amended, § 890.102 also issued under sections 11202(f), 11232(e), and 11246(b) and (c) of Pub. L. 105–33, 111 Stat. 251.

2. In § 890.101, paragraph (a), the definition of *Letter of Credit* is revised to read as follows:

§ 890.101 Definitions; time computations.

(a) * * *

Letter of credit is defined in 48 CFR 1602.170–10.

* * * * *

§ 890.102 [Amended]

3. In § 890.102, paragraph (c)(4) is removed and paragraphs (c)(5), (c)(6), (c)(7), and (c)(8) are redesignated as paragraphs (c)(4), (c)(5), (c)(6), and (c)(7) respectively.

4. In § 890.303, paragraph (b) is revised to read as follows:

§ 890.303 Continuation of enrollment.

* * * * *

(b) *Change of enrolled employees to certain excluded positions.* Employees and annuitants enrolled under this part who move, without a break in service or after a separation of 3 days or less, to an employment in which they are excluded by § 890.102(c), continue to be enrolled unless excluded by paragraphs (c) (4), (5), (6), or (7) of § 890.102.

* * * * *

[FR Doc. 98–13922 Filed 5–26–98; 8:45 am]

BILLING CODE 6325–01–P

DEPARTMENT OF TRANSPORTATION

Federal Aviation Administration

14 CFR Part 71

[Airspace Docket No. 98–ACE–12]

Amendment to Class E Airspace; Knoxville, IA

AGENCY: Federal Aviation Administration (FAA), DOT.

ACTION: Direct final rule; request for comments.

SUMMARY: This action amends the Class E airspace area at Knoxville Municipal Airport, Knoxville, IA. The FAA has developed Global Positioning System (GPS) Runway (RWY) 15 and RWY 33 Standard Instrument Approach Procedures (SIAPs) to serve Knoxville Municipal Airport. Additional controlled airspace extending upward form 700 feet Above Ground Level (AGL) is needed to accommodate these SIAPs and for Instrument Flight Rules (IFR) operations at this airport. The enlarged area will contain the new GPS RWY 15 and GPS RWY 33 SIAPs in controlled airspace. The intended effect of this rule is to provide controlled Class E airspace for aircraft executing the GPS RWY 15 and GPS RWY 33 SIAPs and to segregate aircraft using instrument approach procedures in instrument conditions from aircraft operating in visual conditions.

DATES: This direct final rule is effective on 0901 UTC, August 13, 1998.

Comments for inclusion in the Rules Docket must be received on or before June 15, 1998.

ADDRESSES: Send comments regarding the rule in triplicate to: Manager, Airspace Branch, Air Traffic Division, ACE–520, Federal Aviation Administration, Docket Number 98–ACE–12, 601 East 12th Street, Kansas City, MO 64106.

The official docket may be examined in the Office of the Regional Counsel for the Central Region at the same address between 9:00 a.m. and 3:00 p.m., Monday through Friday, except Federal holidays.

An informal docket may also be examined during normal business hours in the Air Traffic Division at the same address listed above.

FOR FURTHER INFORMATION CONTACT: Kathy Randolph, Air Traffic Division, Airspace Branch, ACE–520C, Federal Aviation Administration, 601 East 12th Street, Kansas City, MO 64106; telephone: (816) 426–3408.

SUPPLEMENTARY INFORMATION: The FAA has developed GPS RWY 15 and GPS RWY 33 SIAPs to serve the Knoxville Municipal Airport, Knoxville, IA. The amendment to Class E airspace at Knoxville, IA, will provide additional controlled airspace at and above 700 feet AGL in order to contain the new SIAPs within controlled airspace, and thereby facilitate separation of aircraft operating under Instrument Flight Rules. The area will be depicted on appropriate aeronautical charts. Class E airspace areas extending upward form 700 feet or more above the surface of the earth are published in paragraph 6005 of FAA Order 7400.9E, dated September 10, 1997, and effective September 16, 1997, which is incorporated by reference in 14 CFR 71.1. The Class E airspace designation listed in this document will be published subsequently in the Order.

The Direct Final Rule Procedure

The FAA anticipates that this regulation will not result in adverse or negative comment and, therefore, is issuing it as a direct final rule. Previous actions of this nature have not been controversial and have not resulted in adverse comments or objections. The amendment will enhance safety for all flight operations by designating an area where VFR pilots may anticipate the presence of IFR aircraft at lower altitudes, especially during inclement weather conditions. A greater degree of safety is achieved by depicting the area on aeronautical charts. Unless a written adverse or negative comment, or a written notice of intent to submit an adverse or negative comment is received within the comment period, the regulation will become effective on the date specified above. After the close of the comment period, the FAA will publish a document in the **Federal Register** indicating that no adverse or negative comments were received and confirming the date on which the final rule will become effective. If the FAA does receive, within the comment period, an adverse or negative comment, or written notice of intent to submit such a comment, a document withdrawing the direct final rule will be published in the **Federal Register**, and a notice of proposed rulemaking may be published with a new comment period.

Comments Invited

Although this action is in the form of a final rule and was not preceded by a notice of proposed rulemaking, comments are invited on this rule. Interested persons are invited to comment on this rule by submitting such written data, views, or arguments as they may desire. Communications should identify the Rules Docket number and be submitted in triplicate to the address specified under the caption **ADDRESSES.** All communications received on or before the closing date for comments will be considered, and this rule may be amended or withdrawn in light of the comments received. Factual information that supports the commenter's ideas and suggestions is extremely helpful in evaluating the effectiveness of this action and determining whether additional rulemaking action would be needed.

Comments are specifically invited on the overall regulatory, economic, environmental, and energy-related aspects of the rule that might suggest a need to modify the rule. All comments submitted will be available, both before and after the closing date for comments, in the Rules Docket for examination by interested persons. A report that summarizes each FAA-public contact concerned with the substance of this action will be filed in the Rules Docket.

Commenters wishing the FAA to acknowledge receipt of their comments submitted in response to this rule must submit a self-addressed, stamped postcard on which the following statement is made: ''Comments to Docket No. 98–ACE–112.'' The postcard will be date stamped and returned to the commenter.

Agency Findings

The regulations adopted herein will not have substantial direct effects on the States, on the relationship between the national government and the States, or on the distribution of power and responsibilities among the various levels of government. Therefore, in accordance with Executive Order 12612, it is determined that this final rule does not have sufficient federalism implications to warrant to preparation of a Federalism Assessment.

The FAA has determined that this regulation is noncontroversial and unlikely to result in adverse or negative comments. For the reasons discussed in the preamble, I certify that this regulation (1) is not a ''significant regulatory action'' under Executive Order 12866; (2) is not a ''significant rule'' under Department of Transportation (DOT) Regulatory Policies and Procedures (44 FR 11034, February 26, 1979); and (3) if promulgated, will not have a significant economic impact, positive or negative, on a substantial number of small entities under the criteria of the Regulatory Flexibility Act.

List of Subjects in 14 CFR Part 71

Airspace, Incorporation by reference, Navigation (air).

Adoption of the Amendment

Accordingly, the Federal Aviation Administration amends 14 CFR part 71 as follows:

PART 71—DESIGNATION OF CLASS A, CLASS B, CLASS C, CLASS D, AND CLASS E AIRSPACE AREAS; AIRWAYS; ROUTES, AND REPORTING POINTS

1. The authority citation for part 71 continues to read as follows:

Authority: 49 U.S.C. 106(g), 40103, 40113, 40120; E.O. 10854, 24 FR 9565, 3 CFR, 1959–1963 Comp., p. 389.

§ 71.1 [Amended]

2. The incorporation by reference in 14 CFR 71.1 of Federal Aviation Administration Order 7400.9E, Airspace Designations and Reporting Points, dated September 10, 1997, and effective September 16, 1997, is amended as follows:

Paragraph 6005 Class E airspace areas extending upward from 700 feet or more above the surface of the earth.

* * * * *

ACE IA E5 Knoxville, IA [Revised]

Knoxville Municipal Airport, IA
(Lat. 41°17′56″ N., long. 93°06′50″ W.)
Knoxville NDB
(Lat. 41°17′45″ N., long. 93°06′51″ W.)

That airspace extending upward from 700 feet above the surface within a 6.8-mile radius of Knoxville Municipal airport and within 2.6 miles each side of the 145° bearing from the Knoxville NDB extending from the 6.8-mile radius to 7 miles southeast of the airport and with 2.6 miles each side of the 340° bearing from the Knoxville NDB extending from the 6.8-mile radius to 7 miles northwest of the airport, exclusion that

airspace within the Knoxville, IA, Class E airspace area.

* * * * *

Issued in Kansas City, MO, on March 31, 1998.

Christopher R. Blum,

Acting Manager, Air Traffic Division, Central Region.

[FR Doc. 98–13995 Filed 5–26–98; 8:45 am]

BILLING CODE 13–M

DEPARTMENT OF HEALTH AND HUMAN SERVICES

Food and Drug Administration

21 CFR Part 184

[Docket No. 88G–0288]

Direct Food Substances Affirmed As Generally Recognized as Safe; Sheanut Oil

AGENCY: Food and Drug Administration, HHS.

ACTION: Final rule.

SUMMARY: The Food and Drug Administration (FDA) is amending its regulations to affirm that the use of sheanut oil as a direct human food ingredient is generally recognized as safe (GRAS). This action is in response to a petition filed by Fuji Oil Co., Ltd.

DATES: The regulation is effective May 27, 1998.

FOR FURTHER INFORMATION CONTACT: William J. Trotter, Center for Food Safety and Applied Nutrition (HFS–206), Food and Drug Administration, 200 C St. SW., Washington, DC 20204, 202–418–3088.

SUPPLEMENTARY INFORMATION:

I. Background

In accordance with the procedures described in § 170.35 (21 CFR 170.35), Fuji Oil Co., Ltd., 6–1, Hachiman-Cho, Minami-Ku, Osaka 542, Japan, submitted a petition (GRASP 8G0343) requesting that sheanut oil be affirmed as GRAS for use as a direct food ingredient.

FDA published a notice of filing of this petition in the **Federal Register** of September 30, 1988 (53 FR 38347), and gave interested parties an opportunity to submit comments to the agency. FDA received three comments in response to that notice. These comments are discussed in section VIII of this document.

II. Standards for GRAS Affirmation

Under § 170.30 (21 CFR 170.30), general recognition of safety may be based only on the views of experts qualified by scientific training and experience to evaluate the safety of substances. The basis of such views may be either: (1) Scientific procedures, or (2) in the case of a substance used in food prior to January 1, 1958, through experience based on common use in food (§ 170.30(a)). General recognition of safety based upon scientific procedures requires the same quantity and quality of scientific evidence as is required to obtain approval of a food additive and ordinarily is to be based upon published studies, which may be corroborated by unpublished studies and other data and information (§ 170.30(b)). General recognition of safety through experience based on common use in food prior to January 1, 1958, may be determined without the quantity or quality of scientific procedures required for approval of a food additive, but ordinarily is to be based upon generally available data and information concerning the pre-1958 history of use of the food ingredient (§ 170.30(c)(1)). In evaluating this petition, the agency reviewed information and data on the history of sheanut oil use and on published and unpublished safety studies for sheanut oil.

III. Identity and Specification

Sheanut oil is produced from sheanuts derived from the Shea tree *Butyrospermum parkii* and is composed mainly of triglycerides containing an oleic acid moiety at the 2-position and saturated fatty acids, usually stearic or palmitic acids, at the 1- and 3-positions. It meets the following specifications, which are consistent with those for other food-grade oils as described in the Food Chemicals Codex (Ref. 1):

1. Saponification value—185 to 195,
2. Iodine value—28 to 43,
3. Unsaponifiable matter—not to exceed 1.5 percent,
4. Free fatty acids—less than 0.1 percent (as oleic acid),
5. Peroxide value—less than 10 milliequivalents/equivalent (meq/eq),
6. Heavy metals—less than 0.1 part per million (ppm) each of lead and copper.

The petitioner adequately referenced methods of analyses for these specifications.

IV. Manufacturing Process

Sheanut oil is refined by various processes, which may involve different sequences of manufacturing steps and solvents that are in common use in the fat and oil industry. The crude oil must be refined to remove excessive unsaponifiable material. Standard refining techniques, e.g., decolorization by passage through bleaching clay and steam distillation to remove odoriferous impurities, are employed to purify further the oil.

V. Proposed Use in Food

The intended use for sheanut oil is as a component of a mixture of oils used as cocoa butter substitutes. The agency has calculated a mean estimated daily intake (EDI) of 2.2 gram/person/day (g/p/d) for sheanut oil in confections and candies (2+ year olds). The EDI for consumers at the 90th percentile level is 4.4 g/p/d. The EDI for children from 2 to 5 years old is 1.8 g/p/d at the mean and 4.3 g/p/d at the 90th percentile level.

VI. Common Use in Food Before 1958

The petitioner provided several published articles that document that sheanut oil has a history of common use in food prior to 1958. Sheanut oil has been used in Africa for food purposes since the 1800's (Ref. 2). It has also been used in Europe as a cooking oil and as a cocoa butter substitute, as well as for making margarine (Ref. 3 through 7). In addition, in a comment submitted in support of the petition, Loders Croklaan, Inc.,[1] of Berwyn, PA, presented information that documents use of sheanut oil in England for more than 50 years; among the uses of sheanut oil documented in this comment were as a pastry fat, a cooking oil, a cocoa butter substitute, and for making margarine. The comment provided copies of formulations from England that showed that some cooking fats in 1948 contained between 5 and 7 percent sheanut oil and that a pastry margarine known as ''flex,'' marketed between 1954 and 1958, contained between 80 and 91 percent sheanut oil.[2]

VII. Safety Information

The evidence documenting common use of sheanut oil in food reflects no known adverse effects. The absence of documented adverse effects from food use of sheanut oil is corroborated by several animal feeding studies, by information regarding the components of sheanut oil, and its similarity in

[1] In a comment submitted to the agency, Loders Croklaan, Inc., also requested that all safety data and other information concerning sheanut oil contained in its Food Master File (FMF) No. 253 be incorporated into Fuji's petition. Consequently, the information contained in FMF No. 253 was made available for public display under the same docket no. 88G–0288 with the Fuji petition.

[2] In addition, in its comment Loders Croklaan, Inc., quoted official United Kingdom statistics for sheanuts imported into the United Kingdom as averaging 6,000 metric tons per year between 1948 and 1957.

composition to other GRAS fats and oils.

Specifically, sheanut oil is composed principally of triglycerides containing oleic acid in the 2-position and the saturated fatty acids, usually stearic and palmitic acids, in the 1- and 3-positions. The components of these triglycerides, glycerol, and oleic, stearic, and palmitic acids, as well as other fatty acids found as minor components, are naturally found as part of lipids and lipoproteins of both plants and animals; they are also the same fatty acids and glycerol components found in a broad range of edible fats and oils that are GRAS. The synthesis and metabolism of these substances are well understood and are documented in biochemistry textbooks (for example, Ref. 8).

In addition, the agency has determined that sheanut oil has an overall composition that conforms to that of other edible oils in terms of its total glyceride content, fractions of tri-, di- and monoglycerides, and unsaponifiable matter (Ref. 9). Thus, sheanut oil is similar in chemical composition to commonly used GRAS fats and oils, such as cocoa butter, cottonseed oil, soybean oil, corn oil, and palm oil.

Further, the agency evaluated four corroborative animal studies on the safety of sheanut oil. Three of these studies, which are published (Ref. 10 through 12), establish that sheanut oil has absorbability comparable to that as the other tested GRAS oils and fats. These studies also establish that the growth rates for the subject animals were comparable to those for animals fed other GRAS oils and fats. The fourth study, which is unpublished, is a 104-week toxicity/carcinogenicity study of sheanut oil and other oils in rats. The results of this 104-week study demonstrate that there is no carcinogenic potential for sheanut oil (Ref. 13).

VIII. Response to Comments

In response to the published notice, FDA received three comments from the law offices of Freeman, Wasserman & Schneider on behalf of Loders Croklaan, Inc., of Berwyn, PA.

As discussed previously, the first comment requested that FDA incorporate the safety data and other information on sheanut oil submitted by Loders Croklaan, Inc., and contained in FMF No. 253. The comment asserted that, in addition to the fact that sheanut oil has been used as part of the human diet for a considerable period of time prior to 1958 in countries outside the United States, the safety data also establish that sheanut oil is safe for human consumption.

The second comment, also submitted in support of the petition, was intended to: (1) Provide independent documentation of the history of use of sheanut oil in food prior to 1958 (discussed in section VI of this document), (2) provide safety data for sheanut oil (discussed in section VII of this document), and (3) suggest modifications to the proposed specifications of sheanut oil. These suggested modifications are consistent with the fact that sheanut oil can be made by different processes that involve various sequences of processing steps and various solvents. The comment asserted that certain changes, discussed as follows, should be made to the specifications proposed by the petitioner.

First, the comment stated that the refined oil produced by Loders Croklaan, Inc.'s process, which has an iodine value typically between 33 and 43, allows for a greater percentage of 2-oleoyl-1,3-distearin (SOS). The comment pointed out that an oil composed entirely of SOS would have an iodine value of 25 and, therefore, recommended a specification for an iodine value between 25 and 43. Second, the comment stated that, if a specification for residual solvent is included, it should reflect the possible varieties of recrystallizing and precipitating solvents typically used in the fat and oil industry, instead of specifications for hexane and ethanol only, which the petitioner uses in its process. Third, the comment stated that the proposed specifications for specific gravity and refractive index reflect only the petitioner's oil product and that if these specifications are to be included in a regulation, the comment suggested that broader ranges be used to reflect industry-wide standards rather than the petitioner's specific product.

The agency agrees that sheanut oil may be refined using a variety of solvents and procedures commonly used in the fats and oils industry. The agency believes that sheanut oil produced by standard processing of sheanuts, including further refining to remove excessive unsaponifiable material, should be the food ingredient to be affirmed as GRAS and that the specifications for sheanut oil should encompass all of the typical sheanut oils produced under good manufacturing practices.

The agency agrees with the comment that the range given for iodine value should be modified. However, the agency has calculated a theoretical iodine value for pure SOS of 28.6 and, therefore, believes that a specification range of 28 to 43 would encompass all likely refined sheanut oils (Ref. 14). With regard to residual solvents, the agency agrees with the comment that the specifications for solvents should not be limited to those used by the petitioner (Ref. 14). The agency notes that solvents other than those used by the petitioner are used in the fats and oils industry, and further notes that any residual solvent that becomes or may reasonably be expected to become a functional component of sheanut oil must be GRAS or a food additive approved for use in the manufacture of food fats and oils. Therefore, the agency believes that no specification for solvents is necessary. Similarly, the agency does not believe that specifications for specific gravity and refractive index are necessary in a regulation in order to ensure a safe product; this would be consistent with specifications for other food-grade oils as described in the Food Chemicals Codex (Ref. 1).

The third comment was a reiteration of Loders Croklaan, Inc.'s position regarding specifications for sheanut oil, which have been discussed previously, together with the agency's response.

IX. Conclusions

The petitioner has provided evidence that demonstrates that sheanut oil was in common use in food prior to 1958; this information is published and is corroborated by other information from separate published sources, including information submitted in a comment. There are no reports of adverse effects from such food use of sheanut oil. As provided for under § 170.30(a)(2), FDA has determined that this information provides an adequate basis upon which to conclude that the use of sheanut oil is GRAS among experts qualified by scientific training and experience to evaluate the safety of substances used in food.

This evidence of common use in food prior to 1958 without any reported adverse effects is further corroborated by information regarding the components of sheanut oil, the similarity of sheanut oil to other oils that are GRAS, and the results of four animal feeding studies, three of which are published. Therefore, the agency is affirming the use of sheanut oil as GRAS in accordance with 21 CFR 184.1(b)(3) in the following food categories at levels not to exceed current good manufacturing practice, except that the ingredient may not be used in a standardized food unless permitted by the standard of identity: Confections and frostings as defined in § 170.3(n)(9)

(21 CFR 170.3(n)(9)), coatings of soft candy as defined in § 170.3(n)(38), and sweet sauces and toppings as defined in § 170.3(n)(43).

X. Environmental Effects

The agency has determined under 21 CFR 25.32(f) that this action is of a type that does not individually or cumulatively have a significant effect on the human environment. Therefore, neither an environmental assessment nor an environmental impact statement is required.

XI. Analysis of Impacts

FDA has examined the impacts of the final rule under Executive Order 12866 and the Regulatory Flexibility Act (5 U.S.C. 601–612). Executive Order 12866 directs agencies to assess all costs and benefits of available regulatory alternatives and, when regulation is necessary, to select regulatory approaches that maximize net benefits (including potential economic, environmental, public health and safety, and other advantages; distributive impacts; and equity). According to Executive Order 12866, a regulatory action is ''economically significant'' if it meets any one of a number of specified conditions, including having an annual effect on the economy of $100 million or adversely affecting in a material way a sector of the economy, competition, or jobs. A regulation is considered ''significant'' under Executive Order 12866 if it raises novel legal or policy issues. The agency finds that this rule is neither an economically significant nor a significant regulatory action as defined by Executive Order 12866. In addition, it has been determined that this final rule is not a major rule for the purpose of congressional review.

The primary benefit of this action is to remove uncertainty about the regulatory status of the petitioned substance. No compliance costs are associated with this final rule because no new activity is required, and no current or future activity is prohibited by this rule.

The Regulatory Flexibility Act requires agencies to analyze regulatory options that would minimize the economic impact of their regulations on small businesses and other small entities. No compliance costs are associated with this final rule because no new activity is required, and no current or future activity is prohibited. Therefore, this final rule will not have a significant economic impact on a substantial number of small entities. Accordingly, under the Regulatory Flexibility Act, the agency certifies that this final rule will not have a significant economic impact on a substantial number of small entities.

XII. Effective Date

This rule recognizes an exemption from the food additive definition in the Federal Food, Drug, and Cosmetic Act, and from the approval requirements applicable to food additives. Thus, no delay in the effective date is required by the Administrative Procedure Act (5 U.S.C. 553(d)). Therefore, the rule will be effective immediately (5 U.S.C. 553(d)(1)).

XIII. References

The following references have been placed on display in the Dockets Management Branch (address above) and may be seen by interested persons between 9 a.m. and 4 p.m., Monday through Friday.

1. *Food Chemicals Codex*, National Research Council, National Academy Press, Washington, DC, 4th ed., 1996.

2. ''Shea,'' *The Oxford English Dictionary*, The Clarendon Press, Oxford, p. 648, 1933.

3. Hefter, G., *Technologie der Fette und Ole*, Julius Springer, Berlin, pp. 688–693, 1908.

4. Jamieson, G. S., *Vegetable Fats and Oils*, Reinhold Publishing Corp., New York, p. 63, 1943.

5. Schwitzer, M. K., *Margarine and Other Food Fats*, Leonard Hill [Books], Ltd., London, p. 40, 1956.

6. Commonwealth Economic Committee, *Vegetables Oils and Oilseeds*, Royal Stationary Office, London, pp. 130–131, 1952.

7. Anderson, J. A. C., and P. N. Williams, *Margarine*, Pergamon Press, Oxford, 2d revised ed., p. 34, 1965.

8. Lehninger, A. L., *Principles of Biochemistry*, Worth Publishers, Inc., New York, NY, 1982.

9. Memorandum from M. DiNovi, FDA to L. Lin, FDA, January 9, 1989.

10. Thomasson, H. J., ''The Biological Value of Oils and Fats: I. Growth and Food Intake on Feeding with Natural Oils and Fats,'' *Journal of Nutrition 56*, pp. 455–468, 1955.

11. Thomasson, H. J., ''The Biological Value of Oils and Fats: IV. The Rate of Intestinal Absorption,'' *Journal of Nutrition 59*, pp. 343–352, 1956.

12. Sawadogo, K. A., and J. A. Bezard, ''Triglyceride Structure of Adipose Tissue of Rats Fed a Diet Based on Shea Butter,'' *Oleagineux 37*, pp. 247–253, 1982.

13. Memorandum of C. Johnson, FDA to K. Ekelman, FDA, May 18, 1995.

14. Memorandum of M. DiNovi, FDA to L. Lin, FDA, February 21, 1989.

List of Subjects in 21 CFR Part 184

Food ingredients.

Therefore, under the Federal Food, Drug, and Cosmetic Act and under authority delegated to the Commissioner of Food and Drugs and redelegated to the Director, Center for Food Safety and Applied Nutrition, 21 CFR part 184 is amended as follows:

PART 184—DIRECT FOOD SUBSTANCES AFFIRMED AS GENERALLY RECOGNIZED AS SAFE

1. The authority citation for 21 CFR part 184 continues to read as follows:

Authority: 21 U.S.C. 321, 342, 348, 371.

2. Section 184.1702 is added to read as follows:

§ 184.1702 Sheanut oil.

(a) Sheanut oil is produced from sheanuts derived from the Shea tree *Butyrospermum parkii* and is composed principally of triglycerides containing an oleic acid moiety at the 2-position and saturated fatty acids, usually stearic or palmitic acids, at the 1- and 3-positions.

(b) The ingredient meets the following specifications when tested using any appropriate validated methodology:

(1) Saponification value of 185 to 195,

(2) Iodine value of 28 to 43,

(3) Unsaponifiable matter not to exceed 1.5 percent,

(4) Free fatty acids not more than 0.1 percent as oleic acid,

(5) Peroxide value not more than 10 milliequivalents/equivalent (meq/eq),

(6) Lead not more than 0.1 part per million (ppm),

(7) Copper not more than 0.1 ppm.

(c) In accordance with § 184.1(b)(3), the ingredient is used in the following food categories at levels not to exceed current good manufacturing practice, except that the ingredient may not be used in a standardized food unless permitted by the standard of identity: Confections and frostings as defined in § 170.3(n)(9) of this chapter, coatings of soft candy as defined in § 170.3(n)(38) of this chapter, and sweet sauces and toppings as defined in § 170.3(n)(43) of this chapter.

Dated: May 13, 1998.

L. Robert Lake,

Director, Office of Policy, Planning and Strategic Initiatives, Center for Food Safety and Applied Nutrition.

[FR Doc. 98–13917 Filed 5–26–98; 8:45 am]

BILLING CODE 4160–01–F

DEPARTMENT OF THE TREASURY

Office of Foreign Assets Control

31 CFR Chapter V

Blocked Persons, Specially Designated Nationals, Specially Designated Terrorists, and Specially Designated Narcotics Traffickers: Additional Designations

AGENCY: Office of Foreign Assets Control, Treasury.

ACTION: Amendment of final rule.

SUMMARY: The Treasury Department is adding to Appendices A and B to 31 CFR chapter V the names of 6 individuals and 21 entities that have been determined to play a significant role in international narcotics trafficking centered in Colombia or have been determined to be owned or controlled by, or to act for or on behalf of, other specially designated narcotics traffickers.

EFFECTIVE DATE: May 26, 1998.

FOR FURTHER INFORMATION CONTACT: Office of Foreign Assets Control, Department of the Treasury, Washington, DC 20220, tel.: 202/622–2520.

SUPPLEMENTARY INFORMATION:

Electronic and Facsimile Availability

This document is available as an electronic file on *The Federal Bulletin Board* the day of publication in the **Federal Register**. By modem, dial 202/515–1387 and type ''/GO FAC,'' or call 202/512–1530 for disk or paper copies. This file is available for downloading without charge in WordPerfect 5.1, ASCII, and Adobe Acrobat[R] readable (*.PDF) formats. For Internet access, the address for use with the World Wide Web (Home Page), Telnet, or FTP protocol is: fedbbs.access.gpo.gov. The document is also accessible for downloading in ASCII format without charge from Treasury's Electronic Library (''TEL'') in the ''Business, Trade and Labor Mall'' of the FedWorld bulletin board. By modem, dial 703/321–3339, and select the appropriate self–expanding file in TEL. For Internet access, use one of the following protocols: Telnet = fedworld.gov (192.239.93.3); World Wide Web (Home Page) = http://www.fedworld.gov; FTP = ftp.fedworld.gov (192.239.92.205). Additional information concerning the programs of the Office of Foreign Assets Control is available for downloading from the Office's Internet Home Page: http://www.ustreas.gov/treasury/services/fac/fac.html, or in fax form through the Office's 24–hour fax–on–demand service: call 202/622–0077 using a fax machine, fax modem, or (within the United States) a touch–tone telephone.

Background

Appendices A and B to 31 CFR chapter V contain the names of blocked persons, specially designated nationals, specially designated terrorists, and specially designated narcotics traffickers designated pursuant to the various economic sanctions programs administered by the Office of Foreign Assets Control (''OFAC'') (62 FR 34934, June 27, 1997). Pursuant to Executive Order 12978 of October 21, 1995, ''Blocking Assets and Prohibiting Transactions with Significant Narcotics Traffickers'' (the ''Order'') and § 536.312 of the Narcotics Trafficking Sanctions Regulations, 31 CFR Part 536 (the ''Regulations''), the following 6 individuals and 21 entities are added to the Appendices as persons who have been determined to play a significant role in international narcotics trafficking centered in Colombia or who have been determined to be owned or controlled by, or to act for or on behalf of, persons designated in or pursuant to the Order (collectively ''Specially Designated Narcotics Traffickers'' or ''SDNTs''). Any property subject to the jurisdiction of the United States in which an SDNT has an interest is blocked, and U.S. persons are prohibited from engaging in any transaction or in dealing in any property in which an SDNT has an interest.

Designations of foreign persons blocked pursuant to the Order are effective upon the date of determination by the Director of the Office of Foreign Assets Control, acting under authority delegated by the Secretary of the Treasury. Public notice of blocking is effective upon the date of filing with the Federal Register, or upon prior actual notice.

Because the Regulations involve a foreign affairs function, Executive Order 12866 and the provisions of the Administrative Procedure Act (5 U.S.C. 553), requiring notice of proposed rulemaking, opportunity for public participation, and delay in effective date, are inapplicable. Because no notice of proposed rulemaking is required for this rule, the Regulatory Flexibility Act (5 U.S.C. 601–612) does not apply.

For the reasons set forth in the preamble, and under the authority of 3 U.S.C. 301; 50 U.S.C. 1601–1641; 50 U.S.C. 1701–1706; E.O. 12978, 60 FR 54579, 3 CFR, 1995 Comp., p. 415, appendices A and B to chapter V of 31 CFR are amended as set forth below:

1. Appendices A and B to chapter V of 31 CFR are amended by adding the following names inserted in alphabetical order (1) in Appendix A, section I, and (2) under the heading ''Colombia'' in Appendix B:

AGRICOLA SONGO LTDA., Calle 74 No. 53–30, Barranquilla, Colombia; NIT # 890115794–3 (Colombia) [SDNT]

ARANA MARIA, Jairo Abraham, Calle 74 No. 53–30, Barranquilla, Colombia; c/o DESARROLLOS URBANOS ''DESARROLLAR'' LTDA., Barranquilla, Colombia; c/o EDIFICACIONES DEL CARIBE LTDA., Barranquilla, Colombia; c/o GRAN COMPAÑIA DE HOTELES LTDA., Barranquilla, Colombia; c/o HOTELES E INMUEBLES DE COLOMBIA LTDA., Barranquilla, Colombia; c/o INMOBILIARIA DEL CARIBE LTDA., Barranquilla, Colombia; c/o INMOBILIARIA HOTELERA DEL CARIBE LTDA., Barranquilla, Colombia; c/o INVERSIONES HOTELERAS DEL LITORAL LTDA., Barranquilla, Colombia; c/o INVERSIONES PRADO TRADE CENTER LTDA., Barranquilla, Colombia; c/o NEGOCIOS Y PROPIEDADES DEL CARIBE LTDA., Barranquilla, Colombia; c/o SURAMERICANA DE HOTELES LTDA., Barranquilla, Colombia; DOB 8 February 1953; alt. DOB 2 May 1946; alt. DOB 21 May 1946; Passport Z4966601 (Colombia); Passport K1030420 (Colombia); Cedula No. 7450538 (Colombia) (individual) [SDNT]

CLINICA ESPECIALIZADA DEL VALLE S.A., (a.k.a. C.E.V. S.A.), Calle 10 No. 44A–26, Cali, Colombia; Apartado Aereo 32412, Cali, Colombia; Carrera 46 No. 9C–85, Cali, Colombia; Carrera 40 No. 6–50, Of. 1501, Cali, Colombia; NIT # 800134099–6 (Colombia) [SDNT]

CONSTRUCTORA CENTRAL DEL VALLE LTDA., (a.k.a. C.C.V. LTDA.), Calle 10 No. 44A–26, Cali, Colombia; NIT # 800144098–1 (Colombia) [SDNT]

DESARROLLOS URBANOS ''DESARROLLAR'' LTDA., (a.k.a. DESARROLLAR LTDA.), Calle 74 No. 53–30, Barranquilla, Colombia; NIT # 890108104–2 (Colombia) [SDNT]

EDIFICACIONES DEL CARIBE LTDA., (a.k.a. EDIFICAR), Calle 74 No. 53–30, Barranquilla, Colombia; NIT # 890108103–5 (Colombia) [SDNT]

ESTRADA RAMIREZ, Jose Arnoldo, Calle 39 No. 1H–31, Cali, Colombia; Carrera 1H No. 39–56, Cali, Colombia; c/o CLINICA ESPECIALIZADA DEL VALLE S.A., Cali, Colombia; c/o CONSTRUCTORA CENTRAL DEL VALLE LTDA., Cali, Colombia; c/o HIELO CRISTAL Y REFRIGERACION LTDA., Cali, Colombia; c/o INVERSIONES JAER LTDA., Cali, Colombia; c/o INVERSIONES SAN JOSE LTDA., Cali, Colombia; c/o MARIN ESTRADA Y CIA S. EN C.S., Cali, Colombia; c/o PARQUE INDUSTRIAL LAS DELICIAS LTDA., Cali, Colombia; DOB 14 July 1947; Cedula No. 16200018 (Colombia) (individual) [SDNT]

GRAN COMPAÑIA DE HOTELES LTDA., (a.k.a. GRANCO), Calle 74 No. 53–30, Barranquilla, Colombia; NIT # 800011606–2 (Colombia) [SDNT]

HIELO CRISTAL Y REFRIGERACION LTDA., (a.k.a. CUATRO FRIO), Carrera 8 No. 32–16, Cali, Colombia; Carrera 44A No. 9C–85, Bogota, Colombia; NIT # 890303017–5 (Colombia) [SDNT]

HOTELES E INMUEBLES DE COLOMBIA LTDA., (a.k.a. HOTINCOL), Calle 74 No. 53–30, Barranquilla, Colombia; NIT # 800013139–3 (Colombia) [SDNT]

INMOBILIARIA DEL CARIBE LTDA., Calle 74 No. 53–30, Barranquilla, Colombia; NIT # 890108105–1 (Colombia) [SDNT]

INMOBILIARIA HOTELERA DEL CARIBE LTDA., (a.k.a. INHOCAR), Calle 74 No. 53–30, Barranquilla, Colombia; NIT # 800012713–7 (Colombia) [SDNT]

INVERSIONES HOTELERAS DEL LITORAL LTDA., (a.k.a. INHOTEL), Calle 74 No. 53–30, Barranquilla, Colombia; NIT # 800011604–8 (Colombia) [SDNT]

INVERSIONES JAER LTDA., Carrera 7 No. 34–341 Bodega 7, Cali, Colombia; Apartado Aereo 10454, Cali, Colombia; Calle 6A Norte No. 2N–36 of. 436, Cali, Colombia; Carrera 1H No. 39–42, Cali, Colombia; NIT # 890332242–1 (Colombia) [SDNT]

INVERSIONES PRADO TRADE CENTER LTDA., (a.k.a. IPRACARIBE), Calle 74 No. 53–30, Barranquilla, Colombia; NIT # 800236713–9 (Colombia) [SDNT]

INVERSIONES SAN JOSE LTDA., Carrera 7 No. 34–341, Cali Colombia; Apartado Aereo 10454, Cali, Colombia; Calle 44 No. 1E–135, Cali, Colombia; Calle 44 No. 1E–155, Cali, Colombia; NIT # 800079682–5 (Colombia) [SDNT]

MARIN ESTRADA Y CIA. S. EN C.S., Carrera 8 No. 32–16, Cali, Colombia; Apartado Aereo 1175, Cali, Colombia; Calle 44 No. 1E–155, Cali, Colombia; Calle 45 No. 1E–86, Cali, Colombia; NIT # 800083114–9 (Colombia) [SDNT]

NASSER ARANA, Carlos Alberto, Calle 74 No. 53–30, Barranquilla, Colombia; c/o AGRICOLA SONGO LTDA., Barranquilla, Colombia; c/o DESARROLLOS URBANOS ''DESARROLLAR'' LTDA., Barranquilla, Colombia; c/o EDIFICACIONES DEL CARIBE LTDA., Barranquilla, Colombia; c/o GRAN COMPAÑIA DE HOTELES LTDA., Barranquilla, Colombia; c/o HOTELES E INMUEBLES DE COLOMBIA LTDA., Barranquilla, Colombia; c/o INMOBILIARIA DEL CARIBE LTDA., Barranquilla, Colombia; c/o INMOBILIARIA HOTELERA DEL CARIBE LTDA., Barranquilla, Colombia; c/o INVERSIONES HOTELERAS DEL LITORAL LTDA., Barranquilla, Colombia; c/o INVERSIONES PRADO TRADE CENTER LTDA., Barranquilla, Colombia; c/o NEGOCIOS Y PROPIEDADES DEL CARIBE LTDA., Barranquilla, Colombia; c/o PROMOCIONES Y CONSTRUCCIONES DEL CARIBE LTDA., Barranquilla, Colombia; c/o PROMOCIONES Y CONSTRUCCIONES DEL CARIBE LTDA. Y CIA. S.C.A., Barranquilla, Colombia; c/o PROMOTORA HOTEL BARRANQUILLA LTDA., Barranquilla, Colombia; c/o SURAMERICANA DE HOTELES LTDA., Barranquilla, Colombia; DOB 21 November 1964; Passport T707770 (Colombia); Passport PE008808 (Colombia); Cedula No. 8745045 (Colombia) (individual) [SDNT]

NASSER ARANA, Claudia Patricia, (a.k.a. Claudia Patricia NASSER de HASBUN; a.k.a. Claudia Patricia NASSER de HAZBUN), Calle 74 No. 53–30, Barranquilla, Colombia; c/o AGRICOLA SONGO LTDA., Barranquilla, Colombia; c/o DESARROLLOS URBANOS ''DESARROLLAR'' LTDA., Barranquilla, Colombia; c/o EDIFICACIONES DEL CARIBE LTDA., Barranquilla, Colombia; c/o GRAN COMPAÑIA DE HOTELES LTDA., Barranquilla, Colombia; c/o HOTELES E INMUEBLES DE COLOMBIA LTDA., Barranquilla, Colombia; c/o INMOBILIARIA DEL CARIBE LTDA., Barranquilla, Colombia; c/o INMOBILIARIA HOTELERA DEL CARIBE LTDA., Barranquilla, Colombia; c/o INVERSIONES HOTELERAS DEL LITORAL LTDA., Barranquilla, Colombia; c/o INVERSIONES PRADO TRADE CENTER LTDA., Barranquilla, Colombia; c/o NEGOCIOS Y PROPIEDADES DEL CARIBE LTDA., Barranquilla, Colombia; c/o PROMOCIONES Y CONSTRUCCIONES DEL CARIBE LTDA., Barranquilla, Colombia; c/o PROMOCIONES Y CONSTRUCCIONES DEL CARIBE LTDA. Y CIA. S.C.A., Barranquilla, Colombia; c/o PROMOTORA HOTEL BARRANQUILLA LTDA., Barranquilla, Colombia; c/o SURAMERICANA DE HOTELES LTDA., Barranquilla, Colombia; DOB 23 January 1966; alt. DOB 23 January 1963; Passport AC751227 (Colombia); Cedula No. 32665137 (Colombia) (individual) [SDNT]

NASSER ARANA, Jorge, Calle 74 No. 53–30, Barranquilla, Colombia; c/o AGRICOLA SONGO LTDA., Barranquilla, Colombia; c/o DESARROLLOS URBANOS ''DESARROLLAR'' LTDA., Barranquilla, Colombia; c/o EDIFICACIONES DEL CARIBE LTDA., Barranquilla, Colombia; c/o GRAN COMPAÑIA DE HOTELES LTDA., Barranquilla, Colombia; c/o HOTELES E INMUEBLES DE COLOMBIA LTDA., Barranquilla, Colombia; c/o INMOBILIARIA DEL CARIBE LTDA., Barranquilla, Colombia; c/o INMOBILIARIA HOTELERA DEL CARIBE LTDA., Barranquilla, Colombia; c/o INVERSIONES HOTELERAS DEL LITORAL LTDA., Barranquilla, Colombia; c/o INVERSIONES PRADO TRADE CENTER LTDA., Barranquilla, Colombia; c/o NEGOCIOS Y PROPIEDADES DEL CARIBE LTDA., Barranquilla, Colombia; c/o PROMOCIONES Y CONSTRUCCIONES DEL CARIBE LTDA., Barranquilla, Colombia; c/o PROMOCIONES Y CONSTRUCCIONES DEL CARIBE LTDA. Y CIA. S.C.A., Barranquilla, Colombia; c/o PROMOTORA HOTEL BARRANQUILLA LTDA., Barranquilla, Colombia; c/o SURAMERICANA DE HOTELES LTDA., Barranquilla, Colombia; DOB 6 November 1966; Passport T705915 (Colombia); Passport AC143719 (Colombia); Cedula No. 72139939 (Colombia) (individual) [SDNT]

NASSER DAVID, Julio Cesar, (a.k.a. ''Jaime Perez Peña''), Calle 74 No. 53–30, Barranquilla, Colombia; Carrera 38B No. 76–40, Barranquilla, Colombia; c/o AGRICOLA SONGO LTDA., Barranquilla, Colombia; c/o DESARROLLOS URBANOS ''DESARROLLAR'' LTDA., Barranquilla, Colombia; c/o EDIFICACIONES DEL CARIBE LTDA., Barranquilla, Colombia; c/o GRAN COMPAÑIA DE HOTELES LTDA., Barranquilla, Colombia; c/o HOTELES E INMUEBLES DE COLOMBIA LTDA., Barranquilla, Colombia; c/o INMOBILIARIA DEL CARIBE LTDA., Barranquilla, Colombia; c/o INMOBILIARIA HOTELERA DEL CARIBE LTDA., Barranquilla, Colombia; c/o INVERSIONES HOTELERAS DEL LITORAL LTDA., Barranquilla, Colombia; c/o INVERSIONES PRADO TRADE CENTER LTDA., Barranquilla, Colombia; c/o NEGOCIOS Y PROPIEDADES DEL CARIBE LTDA., Barranquilla, Colombia; c/o PROMOCIONES Y CONSTRUCCIONES DEL CARIBE LTDA., Barranquilla, Colombia; c/o PROMOCIONES Y CONSTRUCCIONES DEL CARIBE LTDA. Y CIA. S.C.A., Barranquilla, Colombia; c/o PROMOTORA HOTEL BARRANQUILLA LTDA., Barranquilla, Colombia; c/o SURAMERICANA DE HOTELES LTDA., Barranquilla, Colombia; DOB 1 November 1940; alt. DOB 1 October 1940; Passport H130865 (Colombia); Cedula No. 3710619 (Colombia) (individual) [SDNT]

NEGOCIOS Y PROPIEDADES DEL CARIBE LTDA., (f.k.a. NEGOCIAR LTDA.), Calle 74 No. 53–30, Barranquilla, Colombia; NIT # 890108102–8 (Colombia) [SDNT]

PARQUE INDUSTRIAL LAS DELICIAS LTDA., Carrera 7 No. 34–341, Cali, Colombia; Carrera 7 No. 34–341 L–6, Cali, Colombia [SDNT]

PROMOCIONES Y CONSTRUCCIONES DEL CARIBE LTDA., Calle 74 No. 53–30, Barranquilla, Colombia; Calle 78 No. 53–70 Centro Comercial Villa Country, Barranquilla, Colombia; Carrera 54 No. 72–80 Ejecutivo I, Barranquilla, Colombia; Carrera 54 No. 72–147, Barranquilla, Colombia; Carrera 55 No. 72–109 Piso 1, Barranquilla, Colombia; Carrera 56 No. 70–60, Barranquilla, Colombia; Carrera 57 No. 79–149, Barranquilla, Colombia; NIT # 890108115–3 (Colombia) [SDNT]

PROMOCIONES Y CONSTRUCCIONES DEL CARIBE LTDA. Y CIA. S.C.A., (a.k.a. PROMOCON), Calle 74 No. 53–30, Barranquilla, Colombia; Calle 78 No. 53–70 Centro Comercial Villa Country, Barranquilla, Colombia; Carrera 54 No. 72–80 L–21 Ejecutivo I, Barranquilla, Colombia; Carrera 54 No. 72–147 L–115, Barranquilla, Colombia; Carrera 55 No. 80–192, Barranquilla, Colombia; Carrera 55 No. 80–192 Ap. 6, Barranquilla, Colombia; Apartado Aereo 50183, Barranquilla, Colombia; Apartado Aereo 51110, Barranquilla, Colombia; NIT # 890108148–6 (Colombia) [SDNT]

PROMOTORA HOTEL BARRANQUILLA LTDA., Calle 74 No. 53–30, Barranquilla, Colombia; Apartado Aereo 51110, Barranquilla, Colombia; NIT # 890111684–3 (Colombia) [SDNT]

SURAMERICANA DE HOTELES LTDA., (a.k.a. SURATEL), Calle 74 No. 53–30, Barranquilla, Colombia; NIT # 800011603–0 (Colombia) [SDNT]

Dated: May 11, 1998.

R. Richard Newcomb,

Director, Office of Foreign Assets Control.

Approved: May 21, 1998.

James E. Johnson,

Assistant Secretary (Enforcement), Department of the Treasury.

[FR Doc. 98–14176 Filed 5–26–98; 8:45 am]

BILLING CODE 4810–25–F

ENVIRONMENTAL PROTECTION AGENCY

40 CFR Part 52

[AZ–005–ROP FRL–6101–9]

Approval and Promulgation of Implementation Plans; Phoenix, Arizona Ozone Nonattainment Area, 15 Percent Rate of Progress Plan and 1990 Base Year Emission Inventory

AGENCY: Environmental Protection Agency (EPA).

ACTION: Final rule.

SUMMARY: EPA is determining, pursuant to its federal planning authority in Clean Air Act (CAA) section 110(c), that the Phoenix, Arizona ozone nonattainment area has in place sufficient control measures to meet the 15 percent rate of progress (ROP) requirement in Clean Air Act (CAA) section 182(b)(2). EPA is also approving, under CAA sections 110(k) and 182(a)(1), the 1990 base year emissions inventory for the Phoenix metropolitan area that was submitted to EPA by the State of Arizona on April 1, 1993.

EFFECTIVE DATE: June 26, 1998.

ADDRESSES: Copies of the documents relevant to this action, including the technical support document (TSD), are contained in the docket for this rulemaking. The docket is available for inspection during normal business hours at the following locations:

U.S. Environmental Protection Agency, Region 9, Office of Air Planning, Air Division, 17th Floor, 75 Hawthorne Street, San Francisco, California 94105. Phone: (415) 744–1248.

Arizona Department of Environmental Quality, Library, 3033 N. Central Avenue, Phoenix, Arizona 85012. (602) 207–2217.

Copies of this notice and the TSD are also available in the air programs section of EPA Region 9's website, http://www.epa.gov/region09.

FOR FURTHER INFORMATION CONTACT: Frances Wicher, Office of Air Planning (AIR–2), U.S. Environmental Protection Agency, Region 9, 75 Hawthorne Street, San Francisco, California 94105. Phone: (415) 744–1248. Email: wicher.frances@epamail.epa.gov.

SUPPLEMENTARY INFORMATION:

I. Background

A. Clean Air Act Requirements

The Phoenix metropolitan area was originally classified as a moderate ozone nonattainment area on November 6, 1991.[1] Section 182(b) of the Clean Air Act (CAA or Act) requires that each state in which all or part of a moderate ozone nonattainment area is located submit, by November 15, 1992, an inventory of actual emissions from all sources, as described in sections 172(c)(3) and 182(a)(1), in accordance with guidance provided by the Administrator. Section 182(b)(1)(A) of the CAA also requires states with moderate and above ozone nonattainment areas to develop plans to reduce volatile organic compounds (VOC) emissions by 15 percent, net of growth, from the 1990 baseline. The 15 percent rate of progress (ROP) plans were to be submitted by November 15, 1993, and the reductions were required to be achieved by November 15, 1996.

Although the November 15, 1996 deadline has now passed, the 15 percent ROP requirement remains. Once a statutory deadline has passed and has not been replaced by a later one, the deadline then becomes ''as soon as possible.'' *Delaney* v. *EPA,* 898 F.2d 687, 691 (9th Cir. 1990). EPA has interpreted this requirement to be ''as soon as practicable.'' See the proposed rule for this final action at 63 FR 3687 (January 26, 1998).[2] This requirement is discussed further in section II below.

B. Phoenix's 15 Percent Plan

The State of Arizona submitted its initial 15 percent rate of progress plan for the metropolitan Phoenix area on November 15, 1993 and supplemented it on April 8, 1994. On April 13, 1994 EPA found the initial plan incomplete because it failed to include, in fully adopted and enforceable form, all of the measures relied upon in the 15 percent demonstration. This incompleteness finding started the 18-month sanction ''clock'' in CAA section 179 and the two-year clock under section 110(c) for EPA to promulgate a federal implementation plan (FIP) covering the 15 percent ROP requirement. Subsequently, in November 1994 and April 1995, Arizona submitted an attainment plan for the Phoenix area which updated the 15 percent ROP demonstrations.

On May 12, 1995, EPA found the revised 15 percent plan and the attainment plan complete, turning off the sanctions clock; however, under section 110(c), the FIP clock continues until EPA approves the 15 percent plan. Since 1995, EPA has acted to approve many of the control measures relied upon in this plan but has not yet acted on the overall 15 percent plan.

The 15 percent ROP demonstration in the State's plan relied primarily on improvements to the State's vehicle emissions inspection and maintenance (I/M) program. Not all the emission reductions attributed to the program have been realized because of technical problems with implementing certain parts of the I/M program. In part to replace these lost emission reductions

[1] The Phoenix metropolitan area was recently reclassified from moderate to serious for ozone. 62 FR 60001 (November 6, 1997). Today's action relates to the moderate area CAA requirements for a 1990 base year inventory and a 15 percent ROP demonstration. The reclassification does not affect the area's continuing obligation to meet these requirements.

[2] The reader should consult this proposed rule for a more detailed discussion of the CAA requirements applicable to today's final action, the State's 15 percent ROP plans and EPA's evaluation of them, and EPA's proposed 15 percent demonstration.

and in part to ensure continued progress toward attainment of the ozone standard in the Phoenix area, the State opted into EPA's federal reformulated gasoline (RFG) program in 1997 (60 FR 30260 (June 3, 1997)) and EPA recently approved the State's own, more stringent Cleaner Burning Gasoline (CBG) program which is intended to replace the federal program. 63 FR 6653 (February 10, 1998).

C. EPA's 15 Percent ROP Plan

In August 1996, EPA was sued by the American Lung Association of Arizona and others, *American Lung Association of Arizona, Inc. et al.* v. *Browner*, No. CIV 96–1856 PHX ROS (D. Ariz.) to enforce EPA's obligation under CAA section 110(c) to promulgate a federal plan for the 15 percent ROP requirement. On July 8, 1997 a consent decree was filed in the case establishing a schedule of January 20, 1998 for proposing and May 18, 1998 for promulgating a 15 percent ROP plan. EPA's obligation to promulgate a federal plan is relieved to the extent that it has approved State measures.

The State's 15 percent plan as revised and submitted in 1993 through 1995 does not reflect the changes to the control strategy necessitated by the problems with the enhanced I/M program and the implementation of the federal RFG program, nor does it include the recalculation of the target emission level that EPA guidance requires if post-1996 emissions reductions (such as those from the RFG program) are to be credited to the 15 percent plan. As a result, EPA has not received a complete state submittal containing a revised 15 percent ROP demonstration that it could act on without additional analysis, public hearing and adoption by the State. Thus, EPA is complying with the *ALAA* consent decree today by promulgating, pursuant to its CAA section 110(c) FIP authority, a federal 15 percent ROP plan for the Phoenix area.

D. Proposed Action

On January 26, 1998 (63 FR 3687), EPA proposed to determine that the Phoenix area will have sufficient controls in place by no later than April 1, 1999 to meet the 15 percent rate of progress requirement and that this date is the most expeditious date practicable for achieving the 15 percent target, based on the set of controls EPA has proposed for crediting in the 15 percent demonstration and the unavailability of any other practicable controls that could advance the date. The technical basis for this determination and the list of control measures that provide the required 15 percent VOC reduction are summarized in the proposal and are fully documented in the technical support document (TSD) that accompanies this rulemaking.

EPA also proposed to approve the 1990 base year emissions inventory for the Phoenix metropolitan area that was submitted to EPA by the State of Arizona on April 1, 1993. EPA's review of this inventory is also summarized in the proposal and fully documented in the TSD.

II. Public Comment and EPA Responses

EPA received only one set of comments on its proposed determination that the Phoenix, Arizona ozone nonattainment area has in place sufficient control measures to meet the 15 percent ROP requirement in CAA section 182(b)(2). These comments were submitted by the Arizona Center for Law in the Public Interest (ACLPI) on behalf of the plaintiffs in *ALAA*.

EPA has responded to most significant comments below and has provided full responses to all comments in the TSD that accompanies this rulemaking.

Comment: ACLPI claims that EPA's proposal is flawed because it does not propose FIP measures as an alternative to approving a State 15 percent plan, and without such an alternative proposal, EPA's decision making process here will be inherently biased, unfair and violative of the Administrative Procedures Act. ACLPI states that the only way to negate this bias and prejudgment is for EPA to immediately propose a FIP, so that it has an alternative to approval of the State's demonstration.

Response: This comment, as well as others discussed below, reflects a basic misapprehension of the nature of EPA's January 26, 1998 proposal. Contrary to ACLPI's claims, EPA did not propose to approve or otherwise act on Arizona's 15 percent SIP. Rather, the Agency proposed a 15 percent ROP FIP under its federal planning authority in CAA section 110(c).[3]

Nowhere in the proposal did EPA state or otherwise indicate that it was proposing to approve the State's 15 percent plan. In fact, in the section discussing its FIP obligation under *ALAA*, EPA concluded that it did ''not have in front of it a complete state submittal containing a revised 15 percent ROP demonstration that it could act on without additional analysis, public hearing and adoption *by the State*.'' Emphasis added. 63 FR 3688. In the conclusion section of the proposal, EPA stated that it was acting pursuant to its CAA section 110(c) authority in proposing a determination that the Phoenix metropolitan area has in place sufficient control measures to meet the 15 percent ROP requirement. See 63 FR 3692. CAA section 110(c) provides EPA's authority to promulgate FIPs. In contrast, EPA's SIP approval authority resides in section 110(k).

The proposed FIP consists of a *federal* demonstration that already-approved State and federal control measures, combined with already-proposed federal measures, are sufficient to provide for a 15 percent ROP in the Phoenix area as required by CAA section 182(b)(1)(A)(i) and that there are no other measures which would meaningfully advance the date by which the 15 percent ROP will be met. See 63 FR 3692. As a consequence of this finding, EPA did not, and was not required to, propose any additional federal measures.

EPA notes that this is not the first time it has promulgated an Arizona FIP that consists only of a demonstration that existing State and federal measures were adequate. In 1991, EPA promulgated attainment and maintenance demonstrations for the Pima County (Tucson), Arizona carbon monoxide (CO) nonattainment area that consisted solely of a demonstration that existing approved State and federal measures were adequate for expeditious attainment and long-term maintenance of the CO standard in the area and that no additional federal measures were necessary. See 56 FR 5458, 5470 (February 11, 1991).

Comment: ACLPI asserts that if EPA found that the State has not submitted a complete 15 percent ROP demonstration, it should have disapproved it on that basis instead of proceeding to supply its own data and analysis to produce a showing on the State's behalf, an approach which conflicts with the Act. ACLPI states that EPA's statutory duty is to approve or disapprove what the state submits and that EPA cannot write a plan and pretend it is the State's. Finally, ACLPI states that Arizona has had more than ample time to submit its 15 percent plan and if the State's demonstration is inadequate, then EPA must disapprove it and adopt a FIP.

Response: As discussed above, EPA proposed a 15 percent ROP demonstration under its federal planning authority in CAA section 110(c) and did not propose any action on Arizona's 15 percent SIP. When

[3] EPA did at the same time propose to approve under CAA section 110(k) the State's 1990 Base Year Emission Inventory. This inventory was required by CAA section 182(a)(1) and was submitted separately from the 15 percent plan. See 63 FR 3688.

acting in place of the State pursuant to a FIP under section 110(c), EPA ''stands in the shoes of the defaulting State, and all the rights and duties that would otherwise fall to the State accrue instead to EPA.'' *Central Arizona Water Conservation District* v. *EPA*, 990 F.2d 1531, 1541 (9th Cir. 1993). Thus, in preparing this FIP demonstration, it is EPA's responsibility to supply its own data and analyses of that data and to produce the required showing that would otherwise be the responsibility of the State. Thus, the approach EPA took in this rulemaking is fully consistent with the Act.

EPA did base its proposed determination in part on a reanalysis of the State's plan. This approach is reasonable given that the State had already prepared an extensive and competent technical evaluation of emission sources in the Phoenix area and the effect of controls on reducing emissions from those sources. In preparing its own demonstration, EPA did modify some of the information in the State's plan to reflect the actual implementation status of the State's I/M program and the implementation of new federal and state controls. However, a federal plan based on technical information contained in a State plan does not constitute or imply approval of that State plan.

Since no action was proposed in regard to the State's 15 percent ROP plan, comments relating to the appropriate disposition of that plan are not relevant to this rulemaking. EPA notes that it is not required in this instance to disapprove the State plan prior to promulgating a replacement FIP under CAA section 110(c).

EPA acknowledges that it is required by the Act to take action on submitted SIPs. However, at this time inaction on the State's 15 percent plan in no way affects EPA's promulgation of this FIP.

Comment: ACLPI comments that EPA is extending until April 1, 1999 the time for achieving the 15 percent reduction that was supposed to have been achieved by November 15, 1996 and has justified this lengthy extension by adopting several policies that ACLPI asserts are not consistent with applicable case law or the Clean Air Act.

First, ACLPI states that although it agrees with EPA that *Delaney* v. *EPA*, 898 F.2d 687, 691 (9th Cir. 1990) supplies the relevant test for compliance once a statutory deadline has passed, it disagrees with the Agency's interpretation that under the *Delaney* case, the appropriate standard is ''as soon as practicable.'' ACLPI notes that the actual phrase used by the *Delaney* court was ''as soon as *possible*,'' using every available control measure and asserts that the difference between ''practicable'' and ''possible'' is not merely semantic. According to ACLPI, ''practicability,'' as used in the Act, allows for consideration of various economic and social factors in determining the required speed of progress. ACLPI believes that to say that the pace for compliance after the Clean Air Act deadline has passed is still as soon as ''practicable'' is to read the deadline out of the statute which is why the *Delaney* court allegedly set a much more stringent test—compliance as soon as possible—for areas that miss a statutory deadline.

Response: In *Delaney*, the Ninth Circuit interpreted the Clean Air Act requirement for EPA to develop a CO federal implementation attainment plan for two Arizona areas after the passage of the then applicable statutory attainment date of December 31, 1987. The Court concluded that after the passage of that date, ''the national ambient air quality standards must be attained as soon as possible with every available measure * * *.'' 898 F.2d at 691. The *Delaney* Court arrived at this test by relying on a statement in an EPA guidance document providing that if a state plan's ''control measures are not adequate to demonstrate attainment by 1987, additional measures which can be implemented after 1987 must be identified and adopted and attainment must be demonstrated by the earliest possible date * * *. 46 Fed. Reg. 7186 (January 22, 1981).''[4] In another part of the opinion concerning reasonably available control measures, the Court noted another EPA guidance document specifying that a control measure would be deemed not reasonably available if it would not advance attainment, would cause substantial widespread and long-term adverse impact, or would take too long to implement. 898 F.2d at 692.

EPA believes that the appropriate interpretation of *Delaney*'s ''as soon as possible'' test is informed by the Court's acknowledgment of certain limitations on the speed of compliance as expressed in its citation of the guidance related to the scope of reasonably available measures. Therefore, consistently since the Ninth Circuit's opinion, EPA has framed the ''as soon as possible'' *Delaney* test, in the post-statutory attainment deadline context, to mean '' 'as expeditiously as practicable,' by a fixed date,'' and has stated that ''[t]he statute does not require measures that are absurd, unenforceable, or impracticable.'' 55 FR 36458, 36505 (Sept. 5, 1990).[5] In addition to applying this interpretation of the *Delaney* test to attainment plans after the passage of the statutory attainment deadline, the Agency has also consistently applied it in its actions on plans that address the 15 percent requirement following the November 15, 1996 statutory deadline for these plans. See, e.g., 62 FR 31343, 31345–31346 (June 9, 1997) approving the 15 percent ROP SIP for Philadelphia; 62 FR 33999, 34000–34001 (June 24, 1997) approving the 15 percent ROP SIP for the northern Virginia.

Moreover, EPA notes that one court, while finding *Delaney* not precisely on point for its purpose of fashioning a remedy in a citizen's enforcement action, nevertheless made some instructive observations on the relationship between the two standards. The Court noted that:

> although the *Delaney* opinion utilized the 'as soon as possible' standard employed by EPA guidelines, it did not do so out of rejection of the 'practicable' standard or out of concern that the two standards differed. Rather it simply had no occasion to compare them. Indeed the *Delaney* court appeared to blur them when it criticized Arizona for rejecting measures without demonstrating that such measures were 'impracticable' or unreasonable.

Citizens for a Better Environment v. *Deukmejian*, 746 F. Supp. 976, 985 (N.D. Cal. 1990). The Court went on to observe that:

> [a]s a practical matter, however, no Court will use its equitable powers to impose remedies that are irrational, albeit ''possible.'' Thus as long as time is considered paramount, and the term ''practical'' is strictly construed in keeping with the purposes of the Act, the ''as expeditiously as practicable'' standard should yield no less results than an ''as soon as possible'' standard.

The Court concluded that ''when properly interpreted, there is no practical difference between the two standards.'' *Id*. EPA agrees with this assessment.

Furthermore, while EPA believes that it is consistent with the *Delaney* test to take into account socioeconomic factors as described above, the issue is effectively moot with regard to this

[4] Following the *Delaney* opinion, EPA revoked certain portions of this guidance document in order to clarify that the Agency did not intend to require post-1987 plans to include every conceivable control measure. 55 FR 38326 (September 18, 1990).

[5] In its proposal of an attainment CO FIP for Arizona, EPA restated its interpretation of the *Delaney* test as requiring ''a demonstration of attainment as expeditiously as practicable utilizing all measures available to the federal government that are capable of advancing the attainment date, short of those producing absurd results, such as severe socioeconomic disruptions.'' 55 FR 41204, 41210 (October 10, 1990).

rulemaking. In proposing, for the purposes of its 15 percent demonstration, that ''as soon as practicable'' is April 1, 1999, the Agency did not consider any economic or social factors. Rather the factors EPA considered were the Agency's authority and resources to implement a measure, whether the measure provided a significant emission reduction, and whether the measure could be implemented soon enough to meaningfully advance the date by which the 15 percent reduction could be demonstrated. The Agency believes, as discussed above and in response to an additional comment below, that the consideration of these factors is entirely appropriate and consistent with both the Clean Air Act and the *Delaney* opinion.

Comment: ACLPI comments that in its proposed action, EPA asserted that the 15 percent ROP need not be achieved until April 1, 1999 because (a) that is the soonest such reductions will be achieved under the State's adopted programs and various adopted and proposed EPA programs and (b) no other measures are available that would reduce VOC emissions by more than 0.5 percent or advance achievement of the 15 percent ROP by three or more months. ACLPI asserts that there is nothing in the Clean Air Act or *Delaney* that allows de minimis exemptions for percent reductions or months of delay.

Response: The inherent authority of administrative agencies to exempt de minimis situations from a statutory requirement has been upheld in contexts where an agency is invoking a de minimis exemption as ''a tool to be used in implementing the legislative design when ''the burdens of regulation yield a gain of trivial or no value.'' *Alabama Power Co.* v. *Costle,* 636 F.2d 323, 360–61 (D.C. Cir. 1979).

In this rulemaking, EPA has invoked this de minimis doctrine for gauging when the promulgation of a new control would or would not contribute to meeting the statutory requirement for a 15 percent ROP in the Phoenix area as soon as is practicable. EPA has interpreted the ''as soon as practicable'' test to require a showing that the applicable implementation plan contains all VOC control measures that are practicable for the area and that meaningfully accelerate the date by which the 15 percent level is achieved. Measures that provide only an insignificant additional amount of reductions or could not be implemented soon enough to meaningfully advance the date by which the 15 percent is demonstrated are not required to be implemented. See *Memorandum,* John S. Seitz, Director of the Office of Air Quality Planning and Standards, and Richard B. Ossias, Deputy Associate General Counsel to Regional Air Division Directors; ''15 Percent VOC SIP Approvals and the 'As Soon As Practicable' Test;'' February 12, 1997.

For determining whether additional measures were necessary for this demonstration, EPA proposed to define ''significant emission reduction'' to be equal to or more than one-half of one percent (0.5 percent) of the total emission reductions needed to meet the 15 percent ROP requirement in 1999 for the Phoenix nonattainment area, the equivalent of 0.5 metric tons per day (mtpd). Thus any measures that would result in less than a 0.5 mtpd reduction by April 1, 1999 were considered to yield de minimis reductions and were rejected from further review.

In the context of this rulemaking where the 15 percent ROP will be achieved within one year, 0.5 mtpd is truly de minimis, representing *one two-hundredths* of the emission reductions needed to show the 15 percent ROP. In terms of control requirements, more than 200 of these ''de minimis'' measures would be needed to demonstrate 15 percent ROP in Phoenix. The federal imposition of a measure or group of measures with so little impact on the ROP demonstration would be nonsensical. Thus a regulation imposing one of these de minimis measures would indeed yield ''a gain of trivial or no value.'' As such, a de minimis exemption is an entirely ''appropriate tool to be used in implementing the legislative design'' of the CAA's rate of progress and general FIP requirements. *Alabama Power* at 360.

EPA proposed to define ''meaningfully accelerate the date by which the 15 percent is demonstrated'' as three or more months. EPA has projected that the 15 percent ROP will be demonstrated in the Phoenix area by April 1, 1999. Therefore, if a measure could advance that demonstration date to on or before January 1, 1999, then EPA would consider that the measure meaningfully accelerated the 15 percent ROP. In the proposal, EPA explained its selection of three months as a balance between the environmental benefit of advancing the date and the potential to trivialize the ''as soon as practicable'' demonstration. 63 FR 3687, 3691.

The 15 percent ROP progress requirement is part of the Act's overall scheme for ozone attainment. In Phoenix, ozone exceedances occur during the hot-weather months of May through October. EPA's proposed three month ''de minimis'' period (January 1 to April 1) falls well before the beginning of this season and as a result the ozone benefit of additional controls during this period would be at best, exceedingly small. Thus, the federal implementation of a measure or measures whose sole effect would be to advance by less than 3 months from the April 1, 1999 date on which the 15 percent ROP is met, would clearly yield ''a gain of trivial or no value.''

EPA does not agree that *Delaney* bars the use of de minimis exemptions. As discussed previously, the *Delaney* court itself recognized limits on its conclusion that once a statutory deadline has passed the new deadline becomes ''as soon as possible with all available measures.'' These limits include not requiring measures that would not advance attainment, would cause substantial widespread and long-term adverse impact, or would take too long to implement. These limits clearly indicate that the *Delaney* court did not expect EPA to impose controls that yield no benefit or a benefit that is outweighed by the implementation burden. Thus, EPA's use of de minimis exemptions is consistent with *Delaney*.

Comment: ACLPI notes that EPA predicts that the State will meet the 15 percent reduction target by April 1, 1999 with just 0.3 tons per day to spare and argues that this is not a credible demonstration given the size of the inventory and the many uncertainties in EPA's emission reduction predictions. ACLPI asserts that the record here shows that emission reductions expected from control measures do not always materialize.

Response: The statutory requirement for 15 percent ROP demonstrations is met when the plan demonstrates that it achieves ''at least a 15 percent'' reduction. See section 182(b)(1)(A)(i). Neither the Act nor EPA guidance requires 15 percent ROP demonstrations to include a margin of safety; therefore, reductions greater than the exact amount needed to demonstrate the 15 percent ROP are not required. As a result, the amount of excess emissions in the 15 percent demonstration is immaterial.

Both the base year inventory used to calculate the 15 percent target emission level and the projected emission inventories and emission reduction calculations were prepared using generally-accepted methodologies consistent with Agency guidance. See the TSD for this rulemaking. As such, they provide a credible and appropriate basis for the 15 percent demonstration and additional adjustments to account for uncertainties are not warranted or required. EPA notes that it already factored into its 15 percent ROP

demonstration available information on the implementation status of the control measures.

Because ACLPI neither explains how the size of the inventory relates to the credibility of the demonstration nor provides specifics on the ''many uncertainties in EPA's emission reduction predictions'' or instances where the emission reductions may not materialize, EPA is not able to further respond to this comment.

Comment: ACLPI comments that EPA proposed to credit 4.4 tons per day in emission reductions from three federal rulemakings that are still at the proposal stage and asserts that such an approach violates the Act and EPA policy. ACLPI supports that assertion by stating that under section 182(b)(1)(c) of the Act, credit can be claimed only for rules ''promulgated'' by EPA and that EPA policy and the Act also forbid the granting of emission reduction credit for measures that have not been legally adopted. ACLPI further argues that there is no assurance whatsoever that the proposed rules will be adopted in a form and on a schedule that will assure the projected emission reductions and without the credit claimed for these measures, the ROP plan does not demonstrate the required 15 percent reduction and therefore is legally deficient.

Response: Consistent with the Clean Air Act, its policies and its actions on other 15 percent plans, EPA is crediting three proposed national rules in this 15 percent demonstration: consumer products, autobody refinishing and architectural and industrial maintenance coatings. As noted in the proposal, each of these rules are required under CAA section 183(e) and the Agency had recently been sued to enforce the requirement to promulgate these rules. Since the proposal the Agency has agreed to a schedule for their promulgation by August 15, 1998. See lodged consent decree in *Sierra Club* v. *Browner,* CIV No. 97–984 PLF (D.D.C.).

CAA section 182(b)(1)(A) requires states to submit their 15 percent SIP revisions by November, 1993. Section 182(b)(1)(C) provides the following general rule for creditability of emissions reductions towards the 15 percent requirement: ''emissions reductions are creditable toward the 15 percent required * * * to the extent they have actually occurred, as of [November, 1996], from the implementation of measures required under the applicable implementation plan, rules promulgated by the Administrator, or a permit under Title V.'' CAA section 182(b)(1)(D) further states that certain emissions reductions are not creditable, including reductions from certain control measures required prior to the 1990 Amendments.

These creditability provisions are ambiguous. Read literally, they provide that, although the 15 percent SIPs are required to be submitted by November 1993, emissions reductions are creditable as part of those SIPs only if ''they have actually occurred, as of [November 1996]''. This literal reading renders the provision internally inconsistent. Accordingly, EPA believes that the provision should be interpreted to provide, in effect, that emissions reductions are creditable ''to the extent they will have actually occurred, as of [November, 1996], from the implementation of [the specified measures]'' (the term ''will'' is added). This interpretation renders the provision internally consistent.

CAA section 182(b)(1)(C) explicitly includes as creditable reductions those resulting from ''rules promulgated by the Administrator.'' This provision does not state the date by which those measures must be promulgated, i.e., does not indicate whether the measures must be promulgated by the time the 15 percent SIPs were due (November, 1993), or whether the measures may be promulgated after this due date.

Because the statute is silent on this point, EPA has discretion to develop a reasonable interpretation under *Chevron U.S.A. Inc.* v. *NRDC,* 467 U.S. 837, 104 S.Ct. 2778, 81 L.Ed.2d 694 (1984). EPA believes it reasonable in the first instance to interpret CAA section 182(b)(1)(C) to allow areas to credit reductions from federal measures as long as those reductions are expected to occur by November, 1996, the date for achieving the 15 percent ROP, even if the federal measures are not promulgated by the November, 1993 due date for the 15 percent SIPs.

EPA's interpretation is consistent with the Congressionally-mandated schedule for promulgating regulations for consumer and commercial products, under section 182(e) of the Act. This provision requires EPA to promulgate regulations controlling emissions from consumer and commercial products that generate emissions in nonattainment areas. Under the statutory schedule, by November, 1993—the same date that the States were required to submit the 15 percent SIPs—EPA was to issue a report and establish a rulemaking schedule for consumer and commercial products. Further, EPA was to promulgate regulations for the first set of consumer and commercial products by November, 1995. It is reasonable to conclude that Congress anticipated that reductions from these measures would be creditable as part of the 15 percent SIPs, as long as those reductions were to occur by November, 1996.

EPA has also established specific policies interpreting the Act that allow crediting of these proposed national measures in 15 percent plans. See *Memorandum,* John S. Seitz, Director, OAQPS to Regional Air Division Directors; ''Credit for the 15 Percent Rate-of-Progress Plans for Reductions from the Architectural and Industrial Maintenance Coating Rule and the Autobody Refinishing Rule;'' November 29, 1994; *Memorandum,* John S. Seitz, Director, OAQPS to Regional Air Division Directors; ''Credit for the 15 Percent Rate-of-Progress Plans for Reductions from the Architectural and Industrial Maintenance (AIM) Coating Rule;'' March 22, 1995; *Memorandum,* John S. Seitz, Director, OAQPS to Regional Air Division Directors; ''Regulatory Schedule for Consumer and Commercial Products under Section 182(e) of the Clean Air Act;'' June 22, 1995; and *Memorandum,* John S. Seitz, Director of the Office of Air Quality Planning and Standards, and Richard B. Ossias, Deputy Associate General Counsel to Regional Air Division Directors; ''15 Percent VOC SIP Approvals and the 'As Soon As Practicable' Test;'' February 12, 1997.

While this analysis focuses on SIPs, it applies equally to FIPs. As noted before, EPA ''stands in the shoes of the State'' when promulgating a FIP and all the rights and duties available to a state under the Act become available to EPA in a FIP.

The above analysis also describes statutory provisions that include specific dates for 15 percent SIP submittals (November 15, 1993) and implementation (November 15, 1996). While these dates have expired and new dates for submittal (in this case, promulgation) and implementation have been developed, EPA does not believe that the expiration of the statutory dates, and the development of new ones, invalidates the conclusion that reductions from federal measures promulgated after the date the 15 percent plan is submitted (or promulgated) can be counted toward the ROP demonstration.

Because it has agreed to a schedule in a proposed consent decree to promulgate these national rules by August 15, 1998, EPA intends to promulgate the rules within 3 months of this FIP promulgation and well before the April 1, 1999 15 percent ROP demonstration date. As a result, crediting reductions from these federal measures is also sensible from an

administrative standpoint. If it did not credit these national measures, EPA would need to promulgate compensating rules, applicable only to Phoenix, to replace their 4.4 mtpd benefit. EPA has already shown that there are no other measures available that would meaningfully advance the April 1999 date by which the 15 percent ROP is demonstrated in the Phoenix area, thus any additional measures would not result in reductions any sooner than the proposed national rules. Nor would these potential Phoenix-only measures result in any greater reductions creditable to the 15 percent plan since they would simply substitute for the reductions from the national rules.[6] Thus, if it did not credit the national measures, EPA would simply be engaging in a wasteful rulemaking exercise to promulgate measures in May, 1998 that it could almost immediately withdraw when the national rules are promulgated in August, 1998.[7]

The fact that EPA cannot determine precisely the amount of credit available for the proposed national measures does not preclude granting them credit. The credit can be granted as long as EPA is able to develop reasonable estimates of the amount of VOC reductions from the measures EPA expects to promulgate. EPA believes that it is able to develop reasonable estimates, particularly because it has already proposed and taken comment on the measures at issue, and is expecting to promulgate final rules in little less than 3 months. Moreover, the use of estimated emissions and emission reductions rather than actual measurements is a common and necessary practice in attainment and reasonable further progress demonstrations because actual measurements, even for promulgated measures, are seldom available. For example, EPA's document to estimate emissions, ''Compilation of Air Pollutant Emission Factors'', January 1995, AP–42), provide emission factors used to estimate emissions from various sources and source processes. AP–42 emission factors have been used, and continue to be used, by states and EPA to determine base year emission inventory figures for sources and to estimate emissions from sources where such information is needed.

This rulemaking is based on the best information currently available to the Agency on the projected reductions from these proposed national rules. If these projected reductions turn out to be greater than the amount it determines to be appropriate after promulgation of the final rules, then EPA will take appropriate action to revise this 15 percent demonstration.

Comment: ACLPI argues that contrary to EPA's assertion there are a number of additional control measures that are currently available to advance the time for achieving the 15 percent ROP including the use of California's diesel fuel standards (''CARB diesel'') and additional controls on consumer products, both of which are identified in the *Report of the Arizona Governor's Air Quality Strategies Task Force* (1998) (''1998 Task Force Report'') as are a number of other measures.

Response: ACLPI is correct that the 1998 Task Force Report shows that adoption of the CARB diesel fuel standards would reduce Phoenix VOC emissions by 7.1 mtpd in 1999. The report, however, also states that implementation of this measure would require at least two years and thus could not occur prior to mid-2000, more than a year after the April 1, 1999 demonstration date for the 15 percent ROP. The State's consultant concluded that the two-year implementation schedule was the minimum necessary after reviewing the refining capacity available to produce CARB diesel fuel for the Phoenix market. See 1998 Task Force Report, p. 77. Since EPA has no grounds to dispute the consultant's conclusions (which were endorsed by the Task Force) regarding the minimum implementation schedule for CARB diesel, it finds the measure would not advance the date by which the 15 percent ROP would be met.

The Task Force recommended adoption of California's phase I and phase II consumer product standards. These standards are more stringent than EPA's proposed national standards for 13 product categories not currently regulated in Phoenix: single phase aerosol air fresheners, engine degreasers, solid or paste forms of furniture maintenance products, non-aerosol forms of glass cleaners, hairsprays, aerosol insect repellants, nail polish removers, automotive brake cleaners, aerosol dust aids, fabric protectants, crawling bug insecticides, and personal fragrance products.

Except for hairsprays, California's more stringent limits are already in place. The compliance date for the final VOC limit for hairsprays is June 1, 1999, two months after the April 1, 1999 demonstration date for 15 percent ROP in Phoenix. The majority of the emission reductions (or approximately 0.9 metric tons per day) that would result from implementing CARB's consumer products rule in Phoenix come from the final hairspray standard. The balance of the tighter CARB limits produce only a 0.23 mtpd reduction, which EPA finds to be de minimis.

The 1998 Governor's Task Force evaluated and recommended controls for not only VOC but also nitrogen oxides, carbon monoxide, particulate matter and regional haze. These controls range from I/M program improvements to improved compliance with the area's fugitive dust rules and include numerous study proposals (e.g., Transit Task Force). Since ACLPI was not specific about what additional control measures EPA should evaluate for this plan, it is not possible for EPA to respond in more detail to this comment.

III. Conclusion

Pursuant to its federal planning authority under CAA section 110(c) and for the reasons discussed above, EPA is determining that the Phoenix metropolitan area has in place or will have in place sufficient control measures to meet the 15 percent ROP requirement for VOCs in CAA section 182(b)(1)(A) as soon as practicable.

EPA is also approving the State's 1990 base year inventory for the Phoenix area under CAA sections 110(k)(2) and 182(a)(1).

Under 40 CFR 93.118(e), this final action establishes a VOC conformity budget of 76.7 metric tons per average summer day based on the inventory methodology and mobile source emissions model used for this 15 percent ROP demonstration. This conformity budget is in addition to, and not in lieu of, the conformity budget established in the *MAG 1993 Ozone Plan for the Maricopa County Area, Modeling Attainment Demonstration* (October 1994).

IV. Administrative Requirements

A. Executive Order (E.O.) 12866

The Office of Management and Budget has exempted this action from E.O. 12866 review.

[6] The statutory requirement EPA is fulfilling here is to demonstrate a fixed emission reduction of 15 percent from 1990 base year levels. Emission reductions in excess of this fixed amount are unnecessary. Since EPA has already concluded that the proposed national measures combined with other adopted state and federal measures will result in the required 15 percent ROP as soon as practicable, additional Phoenix-only federal measures are not necessary.

[7] In its rulemakings, EPA strives to take the least intrusive and most sensible regulatory approach that achieves the statutory requirements. In this situation, it made no regulatory sense to ignore these pending national measures (which have already been proposed and have near-term date for promulgation) that will apply automatically to Phoenix in favor of promulgating wholly new Phoenix-specific measures.

B. Regulatory Flexibility Act

Under the Regulatory Flexibility Act, 5 U.S.C. Section 601 *et seq.*, EPA must prepare a regulatory flexibility analysis assessing the impact of any proposed or final rule on small entities. 5 U.S.C. sections 603 and 604. Alternatively, EPA may certify that the rule will not have a significant economic impact on a substantial number of small entities. Small entities include small businesses, small not-for-profit enterprises, and government entities with jurisdiction over populations of less than 50,000.

This action simply presents the analysis of the emission impacts on the Phoenix metropolitan area of already adopted or proposed State and federal rules. This action neither promulgates additional measures nor requires Arizona or its local jurisdictions to adopt or implement additional measures beyond those that they currently have adopted and implemented or have been proposed or implemented at the federal level. As such, it does not regulate any entities. Therefore, pursuant to 5 U.S.C. 605(b), EPA certifies that today's action does not have a significant impact on a substantial number of small entities within the meaning of those terms for RFA purposes.

C. Unfunded Mandates Reform Act

Title II of the Unfunded Mandates Reform Act of 1995 (UMRA), P.L. 104–4, establishes requirements for Federal agencies to assess the effects of their regulatory actions on State, local, and tribal governments and the private sector. Under section 202 of the UMRA, EPA generally must prepare a written statement, including a cost-benefit analysis, when EPA promulgates ''any general notice of proposed rulemaking that is likely to result in promulgation of any rule that includes any Federal mandate that may result in the expenditures by State, local, and tribal governments, in the aggregate, or by the private sector, of $100 million or more'' in any one year. A ''Federal mandate'' is defined, under section 101 of UMRA, as a provision that ''would impose an enforceable duty'' upon the private sector or State, local, or tribal governments'', with certain exceptions not here relevant. Under section 203 of UMRA, EPA must develop a small government agency plan before EPA ''establish[es] any regulatory requirements that might significantly or uniquely affect small governments.'' Under section 204 of UMRA, EPA is required to develop a process to facilitate input by elected officers of State, local, and tribal governments for EPA's ''regulatory proposals'' that contain significant Federal intergovernmental mandates. Under section 205 of UMRA, before EPA promulgates ''any rule for which a written statement is required under [UMRA section] 202'', EPA must identify and consider a reasonable number of regulatory alternatives and either adopt the least costly, most cost-effective or least burdensome alternative that achieves the objectives of the rule, or explain why a different alternative was selected.

As explained above, sections 202, 203, 204, and 205 of UMRA do not apply to today's action because it does not impose an enforceable duty on or otherwise affect any entity. Therefore, EPA is not required, and has not taken, any actions under UMRA.

D. E.O. 13045: Protection of Children From Environmental Health Risks and Safety Risks

Executive Order 13045, entitled ''Protection of Children from Environmental Health Risks and Safety Risks (62 FR 19885 (April 23, 1997)), applies to any rule that EPA determines (1) ''economically significant'' as defined under E.O. 12866 and (2) the environmental health or safety risk addressed by the rule has a disproportionate effect on children. If the regulatory action meets both criteria, the Agency must evaluate the environmental health or safety effects of the planned rule on children; and explain why the planned regulation is preferable to other potentially effective and reasonably feasible alternatives considered by the Agency.

Today's final action promulgating a demonstration that the Phoenix area meets the 15 percent VOC ROP requirement in CAA section 182(b)(1)(A)(i) is not subject to E.O. 13045 because it is not an economically significant regulatory action as defined by E.O and because it does not involve decisions on environmental health risks or safety risks that may disproportionately affect children.

E. Submission to Congress and the General Accounting Office

The Congressional Review Act, 5 U.S.C. 801 *et seq.*, as added by the Small Business Regulatory Enforcement Fairness Act of 1996, generally provides that before a rule may take effect, the agency promulgating the rule must submit a rule report, which includes a copy of the rule, to each House of the Congress and to the Comptroller General of the United States. EPA will submit a report containing this rule and other required information to the U.S. Senate, the U.S. House of Representatives, and the Comptroller General of the United States prior to publication of the rule in the **Federal Register**. This rule is not a ''major'' rule as defined by 5 U.S.C. 804(2).

F. Petitions for Judicial Review

Under section 307(b)(1) of the Clean Air Act, petitions for judicial review of this action must be filed in the United States Court of Appeals for the appropriate circuit by July 27, 1998. Filing a petition for reconsideration by the Administrator of this final rule does not affect the finality of this rule for the purposes of judicial review nor does it extend the time within which a petition for judicial review may be filed, and shall not postpone the effectiveness of such rule or action. This action may not be challenged later in proceedings to enforce its requirements. (See section 307(b)(2)).

List of Subjects in 40 CFR Part 52

Environmental protection, Air pollution control, Intergovernmental relations, Ozone.

Dated: May 18, 1998.

Carol M. Browner,

Administrator.

Title 40, Chapter I of the Code of Federal Regulations is amended as follows:

PART 52—[AMENDED]

1. The authority citation for part 52 continues to read as follows:

Authority: 42 U.S.C. 7401 *et seq.*

Subpart D—Arizona

2. Section 52.123 is amended by adding paragraph (g) to read as follows:

§ 52.123 Approval status.

* * * * *

(g) Pursuant to the federal planning authority in section 110(c) of the Clean Air Act, the Administrator finds that the applicable implementation plan for the Maricopa County ozone nonattainment area demonstrates the 15 percent VOC rate of progress required under section 182(b)(1)(A)(i).

[FR Doc. 98–13984 Filed 5–26–98; 8:45 am]

BILLING CODE 6560–50–P

ENVIRONMENTAL PROTECTION AGENCY

40 CFR Part 52

[FI–071–9810a; FRL–6015–4]

Approval and Promulgation of Implementation Plans; State of Florida

AGENCY: Environmental Protection Agency (EPA).

ACTION: Direct final rule.

SUMMARY: EPA is approving a revision to the State of Florida's State Implementation Plan (SIP) submitted to EPA on December 10, 1996, through the Florida Department of Environmental Protection. The amendment adds perchloroethylene to the list of chemicals excluded from the definition of volatile organic compounds (VOC). The amendment also corrects vague language in various definitions. The revision moves conditions relating to the Small Business Assistance Program (SBAP) from Chapter 62–202 to Rule 62–210.220.

DATES: This final rule is effective July 27, 1998 unless adverse or critical comments are received by June 26, 1998. If the final rule is withdrawn, timely notice will be published in the **Federal Register**.

ADDRESSES: Written comments on this action should be addressed to Karla L. McCorkle at the Environmental Protection Agency, Region 4 Air Planning Branch, 61 Forsyth Street, SW, Atlanta, Georgia 30303. Copies of documents relative to this action are available for public inspection during normal business hours at the following locations. The interested persons wanting to examine these documents should make an appointment with the appropriate office at least 24 hours before the visiting day. Reference file FL–071–9810. The Region 4 office may have additional background documents not available at the other locations.

Air and Radiation Docket and Information Center (Air Docket 6102), U.S. Environmental Protection Agency, 401 M Street, SW, Washington, DC 20460

Environmental Protection Agency, Region 4 Air Planning Branch, 61 Forsyth Street, SW, Atlanta, Georgia 30303

Florida Department of Environmental Protection, Air Resources Management Division, Twin Towers Office Building, 2600 Blair Stone Road, Tallahassee, Florida 32399–2400

FOR FURTHER INFORMATION CONTACT: Karla L. McCorkle at 404/562–9043.

SUPPLEMENTARY INFORMATION: On December 10, 1996, the State of Florida through the Florida Department of Environmental Protection submitted a revision to the Florida SIP. The revision adds perchloroethylene to the list of chemicals excluded from the definition of VOC. This amendment also corrects vague language in the definitions of ''Acid Mist,'' ''Commence Construction,'' ''Gas/Gas Method,'' and ''Liquid/Gas Method,'' as directed by Florida's Joint Administrative Committee. The revision moves provisions relating to the SBAP from Chapter 62–202 to Rule 62–210.220. The definition ''Small Business Stationary Source'' is amended for clarification.

The specific rule revisions from the December 10, 1996, submittal that are being approved in this action are discussed below:

Exclusion of Perchloroethylene to VOC Definition

Rule 62–210.200—The amendment adds ''perchloroethylene'' to the list of chemicals excluded from the definition of ''Volatile Organic Compounds.'' This revision makes the definition of VOC in the Florida SIP consistent with the EPA definition.

Definitions

Rule 62–210.200—Throughout this section, the following definitions have been amended to correct vague language: ''Acid Mist,'' ''Commence Construction,'' ''Gas/Gas Method,'' and ''Liquid/Gas Method.'' In definition (1), ''Acid Mist,'' a reference to Rule 62–204.800 is added. In definition (77), ''Commence Construction,'' a completion time is clarified. In definition (137), ''Gas/Gas Method,'' references to the prescribed methods in Rule 62–297.450 (2)(a) and Rule 62–297.450 (2)(c) are added. In definition (167), ''Liquid/Gas Method,'' references to the prescribed methods in Rule 62–297.450 (2)(b) and Rule 62–297.450 (2)(d) are added.

Small Business Assistance Program

Rule 62–210.220—Provisions relating to the SBAP in the Division of Air Resources Management are moved from Chapter 62–202 to Rule 62–210.220.

Rule 62–210.200—The definition ''Small Business Stationary Source,'' is amended to make it clear that facilities may be classified as small business stationary sources either by definition or by petition pursuant to the rule.

Final Action

EPA is approving the aforementioned changes to the SIP. The Agency has reviewed this request for revision of the Federally approved SIP for conformance with the provisions of the 1990 amendments enacted on November 15, 1990. The Agency has determined that this action conforms with those requirements.

EPA is publishing this rule without prior proposal because the Agency views this as a noncontroversial amendment and anticipates no adverse comments. However, in the proposed rules section of this **Federal Register** publication, EPA is publishing a separate document that will serve as the proposal to approve the SIP revision should relevant adverse comments be filed. This rule will be effective July 27, 1998 without further notice unless the Agency receives relevant adverse comments by June 26, 1998.

If the EPA receives such comments, then EPA will publish a document withdrawing the final rule and informing the public that the rule did not take effect. All public comments received will then be addressed in a subsequent final rule based on the proposed rule. The EPA will not institute a second comment period on the proposed rule. Only parties interested in commenting on the proposed rule should do so at this time. If no such comments are received, the public is advised that this rule will be effective on July 27, 1998 and no further action will be taken on the proposed rule.

Nothing in this action should be construed as permitting or allowing or establishing a precedent for any future request for revision to any state implementation plan. Each request for revision to the state implementation plan shall be considered separately in light of specific technical, economic, and environmental factors and in relation to relevant statutory and regulatory requirements.

Administrative Requirements

A. Executive Order 12866

The Office of Management and Budget (OMB) has exempted this regulatory action from E.O. 12866 review.

B. Regulatory Flexibility Act

Under the Regulatory Flexibility Act, 5 U.S.C. 600 *et seq.*, EPA must prepare a regulatory flexibility analysis assessing the impact of any proposed or final rule on small entities. 5 U.S.C. 603 and 604. Alternatively, EPA may certify that the rule will not have a significant impact on a substantial number of small entities. Small entities include small businesses, small not-for-profit enterprises, and government entities

with jurisdiction over populations of less than 50,000.

SIP approvals under section 110 and subchapter I, part D of the Clean Air Act do not create any new requirements but simply approve requirements that the State is already imposing. Therefore, because the Federal SIP approval does not impose any new requirements, the Regional Administrator certifies that it does not have a significant impact on any small entities affected. Moreover, due to the nature of the Federal-State relationship under the CAA, preparation of a flexibility analysis would constitute Federal inquiry into the economic reasonableness of state action. The Clean Air Act forbids EPA to base its actions concerning SIPs on such grounds. *Union Electric Co.* v. *U.S. EPA*, 427 U.S. 246, 255–66 (1976); 42 U.S.C. 7410(a)(2) and 7410(k)(3).

C. Unfunded Mandates

Under section 202 of the Unfunded Mandates Reform Act of 1995 (''Unfunded Mandates Act''), signed into law on March 22, 1995, EPA must prepare a budgetary impact statement to accompany any proposed or final rule that includes a Federal mandate that may result in estimated costs to State, local, or tribal governments in the aggregate; or to private sector, of $100 million or more. Under section 205, EPA must select the most cost-effective and least burdensome alternative that achieves the objectives of the rule and is consistent with statutory requirements. Section 203 requires EPA to establish a plan for informing and advising any small governments that may be significantly or uniquely impacted by the rule.

EPA has determined that the approval action promulgated does not include a Federal mandate that may result in estimated costs of $100 million or more to either State, local, or tribal governments in the aggregate, or to the private sector. This Federal action approves pre-existing requirements under State or local law, and imposes no new requirements. Accordingly, no additional costs to State, local, or tribal governments, or to the private sector, result from this action.

D. Submission to Congress and the General Accounting Office

The Congressional Review Act, 5 U.S.C. 801 *et seq.*, as added by the Small Business Regulatory Enforcement Fairness Act of 1996, generally provides that before a rule may take effect, the agency promulgating the rule must submit a rule report, which includes a copy of the rule, to each House of the Congress and to the Comptroller General of the United States. EPA will submit a report containing this rule and other required information to the U.S. Senate, the U.S. House of Representatives, and the Comptroller General of the United States prior to publication of the rule in the **Federal Register**. This rule is not a ''major rule'' as defined by 5 U.S.C. 804(2).

E. Petitions for Judicial Review

Under section 307(b)(1) of the Clean Air Act, petitions for judicial review of this action must be filed in the United States Court of Appeals for the appropriate circuit by July 27, 1998. Filing a petition for reconsideration by the Administrator of this final rule does not affect the finality of this rule for the purposes of judicial review nor does it extend the time within which a petition for judicial review may be filed, and shall not postpone the effectiveness of such rule or action. This action may not be challenged later in proceedings to enforce its requirements. (See section 307(b)(2).)

F. Executive Order 13045

Protection of Children from Environmental Health Risks and Safety Risks. Executive Order 13045 (62 FR 19885, April 23, 1997), applies to any rule that is (1) likely to be ''economically significant'' as defined under Executive Order 12866, and (2) the Agency has reason to believe that the environmental health or safety risk addressed by the rule may have a disproportionate effect on children. If a regulatory action meets both criteria, the Agency must evaluate the environmental health or safety effects of the planned rule on children, and explain why the planned regulation is preferable to other potentially effective and reasonably feasible alternatives considered by the Agency.

This rule is not subject to E.O. 13045, ''Protection of Children from Environmental Health Risks and Safety Risks'' because this is not an ''economically significant'' regulatory action as defined by E.O. 12866, and because it does not involve decisions on environmental health or safety risks that may disproportionately affect children.

List of Subjects in 40 CFR Part 52

Environmental protection, Air pollution control, Hydrocarbons, Incorporation by reference, Intergovernmental relations, Ozone, Reporting and recordkeeping requirements.

Dated: May 10, 1998.

A. Stanley Meiburg,

Acting Regional Administrator, Region 4.

Part 52 of chapter I, title 40, *Code of Federal Regulations*, is amended as follows:

PART 52—[AMENDED]

1. The authority citation for part 52 continues to read as follows:

Authority: 42.U.S.C. 7401 *et seq.*

Subpart K—Florida

2. Section 52.520, is amended by revising paragraph (c)(87) to read as follows:

§ 52.520 Identification of plan.

* * * * *

(c) * * *

(87) Revisions to the Florida State Implementation Plan submitted by the Department of Environmental Protection on December 10, 1996.

(i) Incorporation by reference. Section 62–210.200(1), (29)(g), (77)(a), (b), (137), (145)(a)29., (167), (259)(a)3–5 and (b), (309)(y), and 62–210.220 of the Florida SIP effective October 15, 1996.

(ii) Other material. None.

* * * * *

[FR Doc. 98–13989 Filed 5–26–98; 8:45 am]

BILLING CODE 6560–50–P

ENVIRONMENTAL PROTECTION AGENCY

40 CFR Part 63

[FRL–6014–5]

Delegation of National Emission Standards for Hazardous Air Pollutants for Source Categories; State of Nevada; Nevada Division of Environmental Protection; Washoe County District Health Department

AGENCY: Environmental Protection Agency (EPA).

ACTION: Direct final rule.

SUMMARY: EPA is taking direct final action to delegate the authority to implement and enforce specific national emission standards for hazardous air pollutants (NESHAPs) to the Nevada Division of Environmental Protection (NDEP) and the Washoe County District Health Department (WCDHD) in Nevada. EPA is also approving WCDHD's program for receiving delegation of unchanged NESHAPs applicable to sources not subject to Title V of the 1990 Clean Air Act Amendments. The preamble outlines the process that NDEP and WCDHD will

use to receive delegation of any future NESHAP, and identifies the NESHAP categories to be delegated by today's action. EPA has reviewed each agency's request for delegation and has found that these requests satisfy all of the requirements necessary to qualify for approval. Thus, EPA is hereby granting NDEP and WCDHD the authority to implement and enforce the unchanged NESHAP categories listed in this rule.

DATES: This rule is effective on July 27, 1998 unless EPA receives relevant adverse comments by June 26, 1998. If EPA receives such comment, then it will publish a timely withdrawal in the **Federal Register** informing the public that this rule will not take effect.

ADDRESSES: Comments must be submitted to Andrew Steckel at the Region IX office listed below. Copies of the requests for delegation and other supporting documentation are available for public inspection (docket number A–96–25) at the following location: U.S. Environmental Protection Agency, Region IX, Rulemaking Office (AIR–4), Air Division, 75 Hawthorne Street, San Francisco, California 94105–3901.

FOR FURTHER INFORMATION CONTACT: Mae Wang, Rulemaking Office (AIR–4), Air Division, U.S. Environmental Protection Agency, Region IX, 75 Hawthorne Street, San Francisco, California 94105–3901, (415) 744–1200.

SUPPLEMENTARY INFORMATION:

I. Background

Section 112(l) of the Clean Air Act, as amended in 1990 (CAA), authorizes EPA to delegate to state or local air pollution control agencies the authority to implement and enforce the standards set out in 40 CFR part 63, National Emission Standards for Hazardous Air Pollutants for Source Categories. On November 26, 1993, EPA promulgated regulations, codified at 40 CFR part 63, subpart E (hereinafter referred to as ''subpart E''), establishing procedures for EPA's approval of state rules or programs under section 112(l) (see 58 FR 62262).

Any request for approval under CAA section 112(l) must meet the approval criteria in 112(l)(5) and 40 CFR part 63, subpart E. To streamline the approval process for future applications, a state or local agency may submit a one-time demonstration that it has adequate authorities and resources to implement and enforce any CAA section 112 standards. If such demonstration is approved, then the state or local agency would no longer need to resubmit a demonstration of these same authorities and resources for every subsequent request for delegation of CAA section 112 standards. However, EPA maintains the authority to withdraw its approval if the State does not adequately implement or enforce an approved rule or program.

On December 12, 1995, EPA approved the Nevada Division of Environmental Protection's (NDEP's) program for accepting delegation of section 112 standards that are unchanged from Federal standards as promulgated (see 60 FR 63631). The approved program reflects an adequate demonstration by NDEP of general resources and authorities to implement and enforce section 112 standards. However, formal delegation for an individual standard does not occur until NDEP obtains the necessary regulatory authority to implement and enforce that particular standard, and EPA approves NDEP's formal delegation request for that standard.

On January 5, 1995, EPA approved the Washoe County District Health Department's (WCDHD's) program for accepting delegation of section 112 standards (see 60 FR 1741). This approval extended only to sources that are subject to the CAA Title V operating permit program. WCDHD subsequently requested approval for its program to receive delegation of unchanged section 112 standards applicable to non-Title V sources (see letter from Brian L. Jennison, Director, Air Quality Management Division, WCDHD to Felicia Marcus, Regional Administrator, U.S. EPA Region IX, dated December 12, 1997). Therefore, today's action includes approval under section 112(l) of WCDHD's program for accepting delegation of section 112 standards applicable to non-Title V sources. The approved programs reflect an adequate demonstration by WCDHD of general resources and authorities to implement and enforce section 112 standards. However, formal delegation for an individual standard does not occur until WCDHD obtains the necessary regulatory authority to implement and enforce that particular standard, and EPA approves WCHDH's formal delegation request for that standard.

Both NDEP and WCDHD informed EPA that they intend to obtain the regulatory authority necessary to accept delegation of section 112 standards by incorporating section 112 standards into their respective state and local codes of regulation by reference to the Federal regulations; NDEP will be incorporating the section 112 standards into the Nevada Administrative Code, and WCDHD will be incorporating the standards into the WCDHD District Board of Health Regulations Governing Air Quality Management. The details of these delegation mechanisms are set forth in Memorandums of Agreement (MOAs) between each agency and EPA, and are available for public inspection at the U.S. EPA Region IX office (docket No. A–96–25).

On January 30, 1998, NDEP requested delegation for several individual section 112 standards that have been incoporated by reference into the Nevada Administrative Code. On December 3, 1997, WCDHD requested delegation for section 112 standards that have been incorporated by reference into the WCDHD District Board of Health Regulations. The standards that are being delegated by today's action are listed in a table at the end of this rule.

II. EPA Action

A. Delegation for Specific Standards

After reviewing NDEP's and WCDHD's requests for delegation of various national emissions standards for hazardous air pollutants (NESHAPs), EPA has determined that these requests meet all the requirements necessary to qualify for approval under CAA section 112(l) and 40 CFR 63.91. Accordingly, NDEP and WCDHD are granted the authority to implement and enforce the requested NESHAPs. These delegations will be effective on July 27, 1998. A table of the NESHAP categories that will be delegated to each agency is shown at the end of this rule. Although NDEP and WCDHD will have primary implementation and enforcement responsibility, EPA retains the right, pursuant to CAA section 112(l)(7), to enforce any applicable emission standard or requirement under CAA section 112. In addition, EPA does not delegate any authorities that require implementation through rulemaking in the **Federal Register**, or where Federal overview is the only way to ensure national consistency in the application of the standards or requirements of CAA section 112.

After a state or local agency has been delegated the authority to implement and enforce a NESHAP, the delegated agency becomes the primary point of contact with respect to that NESHAP. Pursuant to 40 CFR 63.9(a)(4)(ii) and 63.10(a)(4)(ii), EPA Region IX waives the requirement that notifications and reports for delegated standards be submitted to EPA as well as to NDEP or WCDHD.

In its December 3, 1997 request, WCDHD included a request for delegation of the regulations implementing CAA sections 112(g) and 112(j), codified at 40 CFR part 63, subpart B. These requirements apply to major sources only, and need not be

delegated under the section 112(l) approval process. When promulgating the regulations implementing section 112(g), EPA stated its view that ''the Act directly confers on the permitting authority the obligation to implement section 112(g) and to adopt a program which conforms to the requirements of this rule. Therefore, the permitting authority need not apply for approval under section 112(l) in order to use its own program to implement section 112(g)'' (see 61 FR 68397). Similarly, when promulgating the regulations implementing section 112(j), EPA stated its belief that ''section 112(l) approvals do not have a great deal of overlap with the section 112(j) provision, because section 112(j) is designed to use the title V permit process as the primary vehicle for establishing requirements'' (see 59 FR 26447). Therefore, state or local agencies implementing the requirements under sections 112(g) and 112(j) do not need approval under section 112(l). As a result, EPA is not taking action to delegate 40 CFR part 63, subpart B to WCDHD.

B. Delegation Mechanism for Future Standards

Today's document takes action to approve WCDHD's program for receiving delegation of unchanged section 112 standards applicable to non-Title V sources, and serves to notify the public of the details of NDEP's and WCDHD's procedure for receiving delegation of future NESHAP. As set forth in the MOAs, NDEP and WCDHD intend to incorporate by reference, into their respective state and local codes of regulation, each newly promulgated NESHAP for which they intend to seek delegation. The agencies will then submit a letter to EPA Region IX, along with proof of regulatory authority, requesting delegation for each individual NESHAP. Region IX will respond in writing that delegation is either granted or denied. If a request is approved, the delegation of authorities will be considered effective upon the date of the response letter from Region IX. Periodically, EPA will publish in the **Federal Register** a listing of the standards that have been delegated. Although EPA reserves its right, pursuant to 40 CFR 63.96, to review the appropriateness of any future delegation request, EPA will not institute any additional comment periods on these future delegation actions. Any parties interested in commenting on this procedure for delegating future unchanged NESHAPs should do so at this time.

C. Opportunity for Public Comment

EPA is publishing this rule without prior proposal because the Agency views this as a noncontroversial action and anticipates no adverse comments. However, in the Proposed Rules section of this **Federal Register** publication, EPA is publishing a separate document that will serve as the proposal for this action should relevant adverse comments be filed. This action will be effective July 27, 1998 without further notice unless the Agency receives relevant adverse comments by June 26, 1998.

If EPA receives such comments, then EPA will publish a document withdrawing this final rule and informing the public that the rule will not take effect. All public comments received will then be addressed in a subsequent final rule based on the proposed rule. EPA will not institute a second comment period on the proposed rule. Any parties interested in commenting on the proposed rule should do so at this time. If no such comments are received, the public is advised that this rule will be effective on July 27, 1998 and no further action will be taken on the proposed rule.

IV. Administrative Requirements

A. Regulatory Flexibility Act

Under the Regulatory Flexibility Act, 5 U.S.C. 600 *et seq.*, EPA must prepare a regulatory flexibility analysis assessing the impact of any proposed or final rule on small entities. 5 U.S.C. 603 and 604. Alternatively, EPA may certify that the rule will not have a significant impact on a substantial number of small entities. Small entities include small businesses, small not-for-profit enterprises, and government entities with jurisdiction over populations of less than 50,000.

Delegations of authority to implement and enforce unchanged Federal standards under section 112(l) of the Clean Air Act do not create any new requirements but simply transfer primary implementation authorities to the State. Therefore, because this action does not impose any new requirements, I certify that it does not have a significant impact on any small entities affected.

B. Unfunded Mandates Reform Act

Under section 202 of the Unfunded Mandates Reform Act of 1995 (''Unfunded Mandates Act''), signed into law on March 22, 1995, EPA must prepare a budgetary impact statement to accompany any proposed or final rule that includes a Federal mandate that may result in estimated costs to state, local, or tribal governments in the aggregate, or to private sector, of $100 million or more. Under section 205, EPA must select the most cost-effective and least burdensome alternative that achieves the objectives of the rule and is consistent with statutory requirements. Section 203 requires EPA to establish a plan for informing and advising any small governments that may be significantly or uniquely impacted by the rule.

EPA has determined that the delegation action promulgated does not include a Federal mandate that may result in estimated costs of $100 million or more to either state, local, or tribal governments in the aggregate, or to the private sector. This Federal action approves pre-existing requirements under state or local law, and imposes no new Federal requirements. Accordingly, no additional costs to state, local, or tribal governments, or to the private sector, result from this action.

C. Submission to Congress and the General Accounting Office

The Congressional Review Act, 5 U.S.C. 801 *et seq.*, as added by the Small Business Regulatory Enforcement Fairness Act of 1996, generally provides that before a rule may take effect, the agency promulgating the rule must submit a rule report, which includes a copy of the rule, to each House of the Congress and to the Comptroller General of the United States. EPA will submit a report containing this rule and other required information to the U.S. Senate, the U.S. House of Representatives, and the Comptroller General of the United States prior to publication of the rule in the **Federal Register**. This rule is not a ''major'' rule as defined by 5 U.S.C. 804(2).

D. Petitions for Judicial Review

Under section 307(b)(1) of the Clean Air Act, petitions for judicial review of this action must be filed in the United States Court of Appeals for the appropriate circuit by July 27, 1998. Filing a petition for reconsideration by the Administrator of this final rule does not affect the finality of this rule for the purposes of judicial review nor does it extend the time within which a petition for judicial review may be filed, and shall not postpone the effectiveness of such rule or action. This action may not be challenged later in proceedings to enforce its requirements (*see* section 307(b)(2)).

E. Executive Order 12866

The Office of Management and Budget has exempted this regulatory action

from review under Executive Order 12866.

F. Executive Order 13045

Protection of Children from Environmental Health Risks and Safety Risks. Executive Order 13045 (62 FR 19885, April 23, 1997), applies to any rule that is (1) likely to be ''economically significant'' as defined under Executive Order 12866, and (2) the Agency has reason to believe that the environmental health or safety risk addressed by the rule may have a disproportionate effect on children. If a regulatory action meets both criteria, the Agency must evaluate the environmental health or safety effects of the planned rule on children, and explain why the planned regulation is preferable to other potentially effective and reasonably feasible alternatives considered by the Agency.

This rule is not subject to E.O. 13045, ''Protection of Children from Environmental Health Risks and Safety Risks'' because this is not an ''economically significant'' regulatory action as defined by E.O. 12866, and because it does not involve decisions on environmental health or safety risks that may disproportionately affect children.

List of Subjects in 40 CFR Part 63

Environmental protection, Administrative practice and procedure, Air pollution control, Hazardous substances, Intergovernmental relations, Reporting and recordkeeping requirements.

Authority: This action is issued under the authority of section 112 of the Clean Air Act, as amended, 42 U.S.C. 7412.

Dated: May 4, 1998.

Felicia Marcus,

Regional Administrator, Region IX.

Title 40, chapter I, part 63 of the Code of Federal Regulations is amended as follows:

PART 63—[AMENDED]

1. The authority citation for part 63 continues to read as follows:

Authority: 42 U.S.C. 7401, *et seq.*

Subpart E—Approval of State Programs and Delegation of Federal Authorities

2. Section 63.99 is amended by adding and reserving paragraphs (a)(6) through (a)(27), and adding paragraph (a)(28) to read as follows:

§ 63.99 Delegated Federal authorities.

(a) * * *

(6)–(27) (Reserved)

(28) Nevada.

(i) The following table lists the specific part 63 standards that have been delegated unchanged to the air pollution control agencies in the State of Nevada. The (X) symbol is used to indicate each category that has been delegated.

DELEGATION STATUS FOR PART 63 STANDARDS—NEVADA

Subpart	Description	NDEP [1]	WCDHD [2]	CCHD [3]
A	General Provisions	X	X	
M	Perchloroethylene Dry Cleaning	X	X	
N	Hard and Decorative Chromium Electroplating and Chromium Anodizing Tanks	X	X	
O	Ethylene Oxide Sterilization Facilities		X	
Q	Industrial Process Cooling Towers	X		
R	Gasoline Distribution Facilities		X	
T	Halogenated Solvent Cleaning	X	X	
JJ	Wood Furniture Manufacturing Operations	X		
KK	Printing and Publishing Industry	X	X	
OO	Tanks—Level 1	X		
PP	Containers	X		
QQ	Surface Impoundments	X		
RR	Individual Drain Systems	X		
VV	Oil-Water Separators and Organic-Water Separators	X		

[1] Nevada Department of Environmental Protection.
[2] Washoe County District Health Department.
[3] Clark County Health Department.

(ii) [Reserved]

[FR Doc. 98–13986 Filed 5–26–98; 8:45 am]

BILLING CODE 6560–50–P

ENVIRONMENTAL PROTECTION AGENCY

40 CFR Part 180

[OPP–30114; FRL–5775–4]

Tolerance Processing Fees

AGENCY: Environmental Protection Agency (EPA).

ACTION: Final rule.

SUMMARY: This rule increases fees charged for processing tolerance petitions for pesticides under the Federal Food, Drug, and Cosmetic Act (FFDCA). The change in fees reflects a 2.45 percent increase in locality pay for civilian Federal General Schedule (GS) employees working in the Washington, DC/Baltimore, MD metropolitan area in 1998.

EFFECTIVE DATE: June 26, 1998.

FOR FURTHER INFORMATION CONTACT: For information concerning this rule: By mail: Ed Setren, Immediate Office, Resources Management Staff (7501C), Office of Pesticide Programs, Environmental Protection Agency, 401 M St., SW., Washington, DC 20460. Office location, telephone number and e-mail address: Rm. 101E, CM#2, 1921 Jefferson Davis Highway, Arlington, VA (703) 305–5927, e-mail: setren.edward@epamail.epa.gov. For further information concerning tolerance petitions and individual fees contact: Sonya Brooks at the same address, telephone (703) 308–6428, e-mail: brooks.sonya@epamail.epa.gov.

SUPPLEMENTARY INFORMATION: The EPA is charged with administration of section 408 of the Federal Food, Drug, and Cosmetic Act (FFDCA). Section 408 authorizes the Agency to establish tolerance levels and exemptions from the requirements for tolerances for food commodities. Section 408(o) requires that the Agency collect fees as will, in the aggregate, be sufficient to cover the costs of processing petitions for pesticide products, i.e., that the tolerance process be as self-supporting as possible.

The current fee schedule for tolerance petitions (40 CFR 180.33) was published in the **Federal Register** on May 9, 1997 (62 FR 25524) (FRL–5714–1) and

became effective on June 9, 1997. At that time the fees were increased 3.33 percent in accordance with a provision in the regulation that provides for automatic annual adjustments to the fees based on annual percentage changes in Federal salaries. The specific language in the regulation is contained in paragraph (o) of § 180.33 and reads in part as follows:

(o) This fee schedule will be changed annually by the same percentage as the percent change in the Federal General Schedule (GS) pay scale... When automatic adjustments are made based on the GS pay scale, the new fee schedule will be published in the **Federal Register** as a final rule to become effective thirty days or more after publication, as specified in the rule.

The Federal Employees Pay Comparability Act of 1990 (FEPCA) initiated locality-based comparability pay, known as ''locality pay''. The intent of the legislation is to make Federal pay more responsive to local labor market conditions by adjusting General Schedule salaries on the basis of a comparison with non-Federal rates on a geographic, locality basis.

The processing and review of tolerance petitions is conducted by EPA employees working in the Washington, DC/Baltimore, MD pay area. The pay raise in 1998 for Federal General Schedule employees working in the Washington, DC/Baltimore, MD metropolitan pay area is 2.45 percent; therefore, the tolerance petition fees are being increased 2.45 percent. The entire fee schedule, § 180.33, is presented for the reader's convenience. (All fees have been rounded to the nearest $25.00.)

This action does not require review by the Office of Management and Budget (OMB) under Executive Order 12866, entitled Regulatory Planning and Review (58 FR 51735, October 4, 1993), the Paperwork Reduction Act (PRA), 44 U.S.C. 3501 et seq., or Executive Order 13045, entitled Protection of Children from Environmental Health Risks and Safety Risks (62 FR 19885, April 23, 1997). Nor does it require any action under Title II of the Unfunded Mandates Reform Act of 1995 (UMRA) (Pub. L. 104–4), Executive Order 12875, entitled Enhancing the Intergovernmental Partnership (58 FR 58093, October 28, 1993), or Executive Order 12898, entitled Federal Actions to Address Environmental Justice in Minority Populations and Low-Income Populations (59 FR 7629, February 16, 1994). Since this action does not require any proposal, no action is needed under the Regulatory Flexibility Act (RFA) (5 U.S.C. 601 et seq.).

Pursuant to 5 U.S.C. 801(a)(1)(A), as added by the Small Business Regulatory Enforcement Fairness Act of 1996, the Agency will submit a report containing this rule and other required information to the U.S. Senate, the U.S. House of Representatives, and the Comptroller General of the General Accounting Office prior to publication of this rule in today's **Federal Register**. This is not a ''major rule'' as defined by 5 U.S.C. 804(2).

List of Subjects in 40 CFR Part 180

Administrative practice and procedure, Agricultural commodities, Pesticides and pests, Reporting and recordkeeping requirements.

Dated: May 6, 1998.

Marcia E. Mulkey,
Director, Office of Pesticide Programs.

Therefore, 40 CFR part 180 amended as follows:

PART 180–[AMENDED]

1. The authority citation for Part 180 continues to read as follows:

Authority: 21 U.S.C. 346a and 371.

2. Section 180.33 is revised to read as follows:

§ 180.33 Fees.

(a) Each petition or request for the establishment of a new tolerance or a tolerance higher than already established, shall be accompanied by a fee of $65,600, plus $1,650 for each raw agricultural commodity more than nine on which the establishment of a tolerance is requested, except as provided in paragraphs (b), (d), and (h) of this section.

(b) Each petition or request for the establishment of a tolerance at a lower numerical level or levels than a tolerance already established for the same pesticide chemical, or for the establishment of a tolerance on additional raw agricultural commodities at the same numerical level as a tolerance already established for the same pesticide chemical, shall be accompanied by a fee of $15,000 plus $1,000 for each raw agricultural commodity on which a tolerance is requested.

(c) Each petition or request for an exemption from the requirement of a tolerance or repeal of an exemption shall be accompanied by a fee of $12,100.

(d) Each petition or request for a temporary tolerance or a temporary exemption from the requirement of a tolerance shall be accompanied by a fee of $26,200 except as provided in paragraph (e) of this section. A petition or request to renew or extend such temporary tolerance or temporary exemption shall be accompanied by a fee of $3,725.

(e) A petition or request for a temporary tolerance for a pesticide chemical which has a tolerance for other uses at the same numerical level or a higher numerical level shall be accompanied by a fee of $13,050 plus $1,000 for each raw agricultural commodity on which the temporary tolerance is sought.

(f) Each petition or request for repeal of a tolerance shall be accompanied by a fee of $8,200. Such fee is not required when, in connection with the change sought under this paragraph, a petition or request is filed for the establishment of new tolerances to take the place of those sought to be repealed and a fee is paid as required by paragraph (a) of this section.

(g) If a petition or a request is not accepted for processing because it is technically incomplete, the fee, less $1,650 for handling and initial review, shall be returned. If a petition is withdrawn by the petitioner after initial processing, but before significant Agency scientific review has begun, the fee, less $1,650 for handling and initial review, shall be returned. If an unacceptable or withdrawn petition is resubmitted, it shall be accompanied by the fee that would be required if it were being submitted for the first time.

(h) Each petition or request for a crop group tolerance, regardless of the number of raw agricultural commodities involved, shall be accompanied by a fee equal to the fee required by the analogous category for a single tolerance that is not a crop group tolerance, i.e., paragraphs (a) through (f) of this section, without a charge for each commodity where that would otherwise apply.

(i) Objections under section 408(d)(5) of the Act shall be accompanied by a filing fee of $3,275.

(j)(1) In the event of a referral of a petition or proposal under this section to an advisory committee, the costs shall be borne by the person who requests the referral of the data to the advisory committee.

(2) Costs of the advisory committee shall include compensation for experts as provided in § 180.11(c) and the expenses of the secretariat, including the costs of duplicating petitions and other related material referred to the committee.

(3) An advance deposit shall be made in the amount of $32,750 to cover the costs of the advisory committee. Further advance deposits of $32,750 each shall be made upon request of the Administrator when necessary to

prevent arrears in the payment of such costs. Any deposits in excess of actual expenses will be refunded to the depositor.

(k) The person who files a petition for judicial review of an order under section 408(d)(5) or (e) of the Act shall pay the costs of preparing the record on which the order is based unless the person has no financial interest in the petition for judicial review.

(l) No fee under this section will be imposed on the Inter-Regional Research Project Number 4 (IR-4 Program).

(m) The Administrator may waive or refund part or all of any fee imposed by this section if the Administrator determines in his or her sole discretion that such a waiver or refund will promote the public interest or that payment of the fee would work an unreasonable hardship on the person on whom the fee is imposed. A request for waiver or refund of a fee shall be submitted in writing to the Environmental Protection Agency, Office of Pesticide Programs, Registration Division (7505C), Washington, DC 20460. A fee of $1,650 shall accompany every request for a waiver or refund, except that the fee under this sentence shall not be imposed on any person who has no financial interest in any action requested by such person under paragraphs (a) through (k) of this section. The fee for requesting a waiver or refund shall be refunded if the request is granted.

(n) All deposits and fees required by the regulations in this part shall be paid by money order, bank draft, or certified check drawn to the order of the Environmental Protection Agency. All deposits and fees shall be forwarded to the Environmental Protection Agency, Headquarters Accounting Operations Branch, Office of Pesticide Programs (Tolerance Fees), P.O. Box 360277M, Pittsburgh, PA 15251. The payments should be specifically labeled ''Tolerance Petition Fees'' and should be accompanied only by a copy of the letter or petition requesting the tolerance. The actual letter or petition, along with supporting data, shall be forwarded within 30 days of payment to the Environmental Protection Agency, Office of Pesticide Programs, Registration Division, (7504C) Washington, DC 20460. A petition will not be accepted for processing until the required fees have been submitted. A petition for which a waiver of fees has been requested will not be accepted for processing until the fee has been waived or, if the waiver has been denied, the proper fee is submitted after notice of denial. A request for waiver or refund will not be accepted after scientific review has begun on a petition.

(o) This fee schedule will be changed annually by the same percentage as the percent change in the Federal General Schedule (GS) pay scale. In addition, processing costs and fees will periodically be reviewed and changes will be made to the schedule as necessary. When automatic adjustments are made based on the GS pay scale, the new fee schedule will be published in the **Federal Register** as a Final Rule to become effective 30 days or more after publication, as specified in the rule. When changes are made based on periodic reviews, the changes will be subject to public comment.

[FR Doc. 98–13994 Filed 5–26–98; 8:45 am]

BILLING CODE 6560–50–F

DEPARTMENT OF TRANSPORTATION

Maritime Administration

46 CFR Part 360

[Docket No. MARAD–1998–3865]

RIN 2133—AB34 (FINAL)

Transfer of Marine Equipment to Ship Operators and Shipyards; Removal of Obsolete Regulations

AGENCY: Maritime Administration, Department of Transportation.

ACTION: Final rule.

SUMMARY: The Maritime Administration (MARAD) is removing as obsolete its regulations relating to the transfer of marine equipment to ship operators and shipyards.

EFFECTIVE DATE: May 27, 1998.

FOR FURTHER INFORMATION CONTACT: Eugene Magee, Chief, Division of Reserve Fleet, Maritime Administration, 400 Seventh St, S.W., Room 2112, Tel. (202) 366–5752.

SUPPLEMENTARY INFORMATION: 46 CFR part 360 prescribes regulations for the transfer by MARAD of marine equipment on board vessels in the National Defense Reserve Fleet (NDRF) to operators of U.S.-flag merchant ships and to shipyards for the construction or repair of U.S.-flag merchant ships, on the basis of replacement at the earliest possible date.

The provisions contained in 46 CFR part 360 have been in effect over 25 years, and MARAD has found that such marine equipment on board NDRF vessels, which average 42 years in age, is now commercially obsolete and cannot be used by current U.S.-flag merchant ships. However, such equipment may be needed to support inactive ships in MARAD's Ready Reserve Force Fleet or other retention ships in the NDRF and therefore should be retained.

Accordingly, the subject transfer regulation serves no useful purpose, and MARAD is hereby removing 46 CFR Part 360 as obsolete in this final rule.

Rulemaking Analyses and Notices

Executive Order 12866 (Regulatory Planning and Review)

This rulemaking is not considered to be an economically significant regulatory action under section 3(f) of Executive Order 12866. Also, it is not a major rule under Pub. L. 104–121, 5 U.S.C. 804, or a significant rule under the Department's Regulatory Policies and Procedures. Accordingly, it has not been reviewed by the Office of Management and Budget.

MARAD has determined that this rulemaking presents no substantive issue which it could reasonably expect to produce meaningful public comment since it is merely removing obsolete regulations. Accordingly, MARAD has determined that the notice and public comment procedure otherwise required by the Administrative Procedure Act, 5 U.S.C. 553(c), is unnecessary and good cause exists, pursuant to 5 U.S.C. 553(d)(3), to make the changes effective upon publication.

Federalism

The Maritime Administration has analyzed this rulemaking in accordance with the principles and criteria contained in Executive Order 12612, and it has been determined that these regulations do not have sufficient federalism implications to warrant the preparation of a Federalism Assessment.

Regulatory Flexibility Act

The Maritime Administration certifies that this rulemaking will not have a significant economic impact on a substantial number of small entities. 46 CFR Part 360 is being removed as obsolete, as it currently serves no useful purpose.

Environmental Assessment

The Maritime Administration has considered the environmental impact on this rulemaking and has concluded that an environmental impact statement is not required under the National Environmental Policy Act of 1969.

Paperwork Reduction Act

This rulemaking contains no reporting requirement that is subject to OMB approval under 5 CFR Part 320,

pursuant to the Paperwork Reduction Act of 1980 (44 U.S.C. 3501, *et seq.*).

List of Subjects in 46 CFR Part 360

Government property, Maritime carriers.

PART 360—[REMOVED]

Accordingly, under the authority of 46 App. U.S.C. 1114(b), 46 CFR part 360 is hereby removed in its entirety.

Dated: May 20, 1998.

By Order of the Maritime Administrator.

Joel C. Richard,

Secretary, Maritime Administration.

[FR Doc. 98–13878 Filed 5–26–98; 8:45 am]

BILLING CODE 4910–81–P

DEPARTMENT OF TRANSPORTATION

National Highway Traffic Safety Administration

49 CFR Part 571

[Docket No. NHTSA–98–3837, Notice 1]

RIN 2127–AH07

Federal Motor Vehicle Safety Standards; Metric Conversion of Tire Standards

AGENCY: National Highway Traffic Safety Administration (NHTSA), DOT.

ACTION: Final rule; technical amendment.

SUMMARY: This document revises selected Federal Motor Vehicle Safety Standards (FMVSS) on tires by converting English measurements specified in those standards to metric measurements. This is one of several rulemaking actions that NHTSA is undertaking to implement the Federal policy that the metric system of measurement is the preferred system of weights and measures for United States trade and commerce. The conversions are not intended to make any changes in the stringency of the affected FMVSS. A companion final rule published in today's **Federal Register** converts, from English measurements to metric measurements, selected FMVSSs that do not relate to tires.

This document also includes a technical amendment to the standard on tire selection and rims for motor vehicles other than passenger cars so that tire information provided on labels may use abbreviations for units of weight (mass) measurement.

DATE: This final rule is effective May 27, 2003. Optional early compliance with the changes made in this final rule is permitted beginning May 27, 1998.

ADDRESSES: Petitions for reconsideration of this final rule should refer to the docket and notice number cited in the heading of this final rule and be submitted to: Administrator, National Highway Traffic Safety Administration, 400 Seventh Street, SW, Washington, DC 20590. It is requested, but not required, that 10 copies be submitted.

FOR FURTHER INFORMATION CONTACT: Mr. Kevin Cavey, National Highway Traffic Safety Administration, 400 Seventh Street, SW, Washington, DC 20590. Mr. Cavey's telephone number is: (202) 366–5271.

SUPPLEMENTARY INFORMATION:

I. Background Information

Section 5164 of the Omnibus Trade and Competitiveness Act (Pub. L. 100–418), makes it United States (U.S.) policy that the metric system of measurement is the preferred system of weights and measures for United States trade and commerce. Executive Order 12770 directs Federal agencies to comply with the Act by adopting a conversion schedule for their programs by September 30, 1992. In a **Federal Register** document of April 21, 1992 (57 FR 14619), the National Highway Traffic Safety Administration (NHTSA) published its plan to use the metric system in NHTSA programs, and included an implementation schedule to convert the Federal Motor Vehicle Safety Standards (FMVSSs) to metric measurements.

In a final rule published on March 15, 1995 (60 FR 13639), NHTSA completed the first phase of metrication, converting English measurements in the following FMVSSs to the metric system: Standard No. 102, *Transmission shift lever sequence, starter interlock, and transmission braking effect*; Standard No. 103, *Windshield defrosting and defogging systems*; Standard No. 104, *Windshield wiping and washing systems*; Standard No. 107, *Reflecting surfaces*; Standard No. 110, *Tire selection and rims*; Standard No. 112, *Headlamp concealment devices*; Standard No. 114, *Theft protection*; Standard No. 115, *Vehicle identification number—basic requirements*; Standard No. 120, *Tire selection and rims for motor vehicles other than passenger cars*; Standard No. 124, *Accelerator control systems*; Standard No. 126, *Truck-camper loading*; Standard No. 205, *Glazing materials*; Standard No. 206, *Door locks and door retention components*; Standard No. 207, *Seating systems*; Standard No. 212, *Windshield mounting*, and Standard No. 216, *Roof crush resistance*.

In the March 14, 1995 final rule, NHTSA established the following principles for converting English system measurements to the metric system:

(1) Equivalent conversions are generally favored, not exact ones;

(2) The term ''mass'' is favored over the term ''weight,'' except when ''weight'' is used as part of a defined term;

(3) Force measurements are converted by specifying in the regulatory language the steps for making the conversion; and

(4) Dual measurements (i.e., both English and metric measurements) are used in a standard when it seems likely that it will be read by persons not fully accustomed to using the metric system.

NHTSA stated its intent to follow these principles in future metrication rulemakings.

II. Notice of Proposed Rulemaking for Second Phase

On April 21, 1997, NHTSA began its second phase of metricating the FMVSSs by publishing a notice of proposed rulemaking to convert English measurements in the following Federal Motor Vehicle Safety Standards to the metric system: Standard No. 101, *Controls and displays*; Standard No. 109, *New pneumatic tires*; Standard No. 111, *Rearview mirrors*; Standard No. 116, *Motor vehicle brake fluids*; Standard No. 117, *Retreaded pneumatic tires*; Standard No. 119, *New pneumatic tires for vehicles other than passenger cars*; Standard No. 123, *Motorcycle controls and displays*; Standard No. 201, *Occupant protection in interior impact*; Standard No. 202, *Head restraints*; Standard No. 203, *Impact protection for the driver from the steering control system*; Standard No. 204, *Steering control rearward displacement*; Standard No. 209, *Seat belt assemblies*; Standard No. 210, *Seat belt assembly anchorages*; Standard No. 219, *Windshield zone intrusion*; Standard No. 220, *School bus rollover protection*; Standard No. 222, *School bus passenger seating and crash protection*; Standard No. 301, *Fuel system integrity*; and Standard No. 302, *Flammability of interior materials.*

The agency raised issues concerning the following proposed conversions: [1]

Exact Versus Equivalent Conversions—In the NPRM, NHTSA stated that although it generally favors the use of equivalent conversions, it will not use equivalent conversions where there is a specific safety need or other reason to make an exact conversion. For

[1] The issues relating to the other standards addressed in the NPRM are discussed in today's companion notice.

certain proposed conversions (i.e., ones involving requirements that specify the height of lettering, the minimum depth to which the lettering must be impressed, or the maximum height to which it must be embossed), NHTSA proposed exact conversions to minimize the possibility of manufacturers having to change molds and materials. NHTSA also proposed exact conversions for measurements in several non-tire standards to avoid a possibility that the standard would become more stringent after the conversion.

Dual Measurements—The agency stated its belief that converting some tables so that they contain only metric measurements may not be very informative to American tire manufacturers and retreaders and mirror manufacturers, many of whom may be more familiar with English measurements. Accordingly, in the case of the mirror and tire standards, NHTSA proposed that the tables and regulatory text provide both the English and metric systems of measurement. Specifically, for Standard No. 117, *Retreaded pneumatic tires*, NHTSA proposed to include both p.s.i. and kPa measurements in Table I—''Plies''. For Standard No. 119, *New pneumatic tires for vehicles other than passenger cars*, NHTSA proposed to provide both English and metric measurements in Table I—''Strength Test Plunger Diameter'', Table II—''Minimum Static Breaking Energy'', and Table III—''Endurance Test Schedule''.

NHTSA sought public comment on the proposal to use dual measurements for the specified tables and on the period of time after which use of the English units of measurements should be phased out.

Leadtime—NHTSA proposed that, if made final, the changes proposed in the NPRM take effect one year after the publication of the final rule, with manufacturers given the option to comply immediately with the new measurements. NHTSA stated its belief that one year is enough lead time for industry to make any necessary changes. In the past, NHTSA has consistently stated that it is not the agency's intent to impose unnecessary costs to manufacturers as a result of the metrication process. NHTSA stated it was aware that if some of the proposed changes in the tire standards were made final, tire mold manufacturers would have to change molds to accommodate the new metric/English measurements. Changing tire molds to accommodate labeling with metric measurements where the metric measurements are not specified may result in manufacturers incurring significant costs unless sufficient leadtime is given so that changes could be made when molds are changed.

NHTSA specifically sought comment on the amount of lead time that tire manufacturers should be given so that they could meet any changes that may result if the amendments proposed in NPRM are made final. NHTSA asked whether one year is enough lead time to permit tire manufacturers to purchase new molds that would meet the metricated standard.

III. Public Comments and NHTSA's Response

In response to the NPRM, NHTSA received comments from 17 commenters. Several commenters addressed only proposed metric conversions in the tire standards: Japan Automobile Tire Manufacturers' Association, Goodyear, Rubber Manufacturers' Assn., Toyota, and the European Tyre and Rim Technical Organization. The following comments were offered on Standard No. 109, *New pneumatic tires*; Standard No. 117, *Retreaded pneumatic tires*; and Standard No. 119, *New pneumatic tires for vehicles other than passenger cars.*

Most of the suggestions of commenters for changes to the three tire standards were to correct typographical errors or to make the conversions more consistent with established tire industry, European or other international standards. Many of the commenters made identical suggestions for changes. NHTSA has reviewed each suggested change and determined whether the change, if adopted, would have a substantive effect on the tire standard. The final rule incorporates the suggested changes, except as noted below.

The Rubber Manufacturers Association (RMA), in a June 19, 1997 submission, made detailed comments on proposed changes to Standards 109, 117, and 119. NHTSA has made almost all of RMA's suggested changes. However, the agency is not making RMA's suggested changes for Standard No. 119's S6.5(d) and S6.5(e). S6.5 specifies information that must be marked on tire sidewalls. That information includes the maximum load rating and corresponding inflation pressure of the tire (S6.5(d)) and the speed restriction of the tire, if 55 miles per hour or less (S6.5(e)). RMA's recommendation would make it optional, not mandatory, that the S6.5(d) and (e) information on tires be marked in metric and English system units. RMA's reason for its recommendation is that virtually every mold for tires regulated by Standard No. 119 would have to be restamped and there is ''no justification for that kind of expense,'' even if spread out over several years.

In a submission dated August 28, 1997, RMA stated that its members estimate a cost to the industry of $18.2 million dollars to make changes to tire molds, if the one year implementation date proposed in the NPRM is adopted. The $18.2 million figure was calculated by adding the estimates provided by Goodyear, Michelin and Bridgestone-Firestone (a total of $15 million) and those provided by Dunlop, Continental, and Cooper (a total of $3.2 million).

Goodyear Tire and Rubber Company also asked that NHTSA not require metric markings for Standard No. 119. Goodyear stated that adding metric markings would mean that it would have to ''virtually have to restamp every mold that currently exists for tires covered'' by Standard No. 119. Goodyear stated that the restamping would be a major expense and not consistent with NHTSA's desire not to unduly burden tire manufactures.

NHTSA is not adopting RMA and Goodyear's request not to metricate Standard No. 119. NHTSA has undertaken this rulemaking to implement the Federal policy that the metric system of measurement is the preferred system of weights and measurements for United States trade and commerce. The metrication policy applies to all Federal Motor Vehicle Safety Standards, including Standard No. 119.

NHTSA notes that neither RMA nor Goodyear provided information on a leadtime for implementing the metrication of Standard No. 119 that would minimize the compliance burden on the tire industry. Therefore, in order to lessen the burden on tire manufacturers, NHTSA will not make the final rule effective in one year, as proposed in the NPRM, but will delay the effective date of the metricated tire standards for five years. Optional immediate compliance is also provided. NHTSA believes that during the course of five years, tire manufacturers will have the opportunity to replace molds as they become outmoded or worn out with new molds that incorporate both metric and English measurements.

IV. Technical Amendment to Standard No. 120

In the NPRM, NHTSA did not propose changes to Standard No. 120, *Tire selection and rims for motor vehicles other than passenger cars.* Nevertheless, Rover Group Ltd. suggested that the sample label titled ''TRUCK EXAMPLE—SUITABLE TIRE-RIM

CHOICE'' (following S5.3.2 of Standard No. 120) be amended to permit lower case letters for KG, the abbreviation for kilogram.

Land Rover's comment indicates that it believes ''kilograms'' used in the label may be abbreviated as ''kg''. At present, the label example specifies that units of weight be spelled out, i.e., ''kilogram'' or ''pound''. However, NHTSA has reexamined the label example and determined that consumers will not be confused by the abbreviations ''kg'' and ''lbs'' in lieu, respectively, of ''kilograms'' and ''pounds.'' Thus, NHTSA in this final rule is also amending the label example that follows S5.3.2 of Standard No. 120 to permit abbreviations for kilograms and pounds.

However, NHTSA is not specifying that the abbreviation ''kg'' be in lower case letters because S5.3 *Label information* specifies that all information provided be ''lettered in block capitals and numerals.'' NHTSA does not agree with Land Rover that persons seeing an upper case ''KG'' on the label will likely mistake this abbreviation for ''Kelvin Giga'' (which means Kelvin temperature of Celsius +273° times 10 to the ninth power) instead of the more common ''kilogram.''

V. Regulatory Impacts

A . Executive Order 12866 and DOT Regulatory Policies and Procedures

NHTSA has examined the impact of this rulemaking action under E.O. 12866 and the Department of Transportation's regulatory policies and procedures. This rulemaking document was not reviewed under E. O. 12866, ''Regulatory Planning and Review.'' This action has been determined to be not ''significant'' under DOT's regulatory policies and procedures.

In converting the Federal Motor Vehicle Safety Standards from the English to the metric measurement system, the agency has made conversions in a way that does not substantively change the safety performance required of motor vehicle and motor vehicle equipment. As a result of this rule, manufacturers now providing consumer information (e.g., labeling) may incur minimal additional costs since they will have to add metric units to the information on their tires. In order to ensure that tire manufacturers can make the timing of their addition of the metrics unit information coincide with the timing of the replacement of their tire molds as they wear out and naturally reach the end of their useful life, the agency is providing five years of leadtime. The impacts of this action will be so minor that preparation of a full regulatory evaluation for this proposed rule is not warranted.

B. Regulatory Flexibility Act

The agency has considered the effects of this rulemaking action under the Regulatory Flexibility Act (5 U.S.C. 601 *et seq.*). I certify that this proposed rule will not have a significant economic impact on a substantial number of small entities. As noted above, converting from the English system to the metric system will not require a change in the performance of any tire. While tire molds may have to be changed to accommodate dual metric/English labeling on tires, tire manufacturers can schedule the change so that it coincides with the normal retirement of tire molds as they wear out.

NHTSA does not know of any U.S. small businesses that manufacture tires. The U.S. Small Business Administration (SBA)'s small business size standard for a tire manufacturer is at 13 CFR 121.601 *Standard Industrial Classification Codes and size standards.* The Standard Industrial Classification Code (SIC) for manufacturers of tires and inner tubes is 3011. For SIC 3011, the SBA has established a size standard of 1,000 employees or fewer.

C. Environmental Impacts

In accordance with the National Environmental Policy Act of 1969, the agency has considered the environmental impacts of this rulemaking action and determined that, as a final rule, it will not have a significant impact on the quality of the human environment.

D. Federalism

This action has been analyzed in accordance with the principles and criteria contained in Executive Order 12612, and it has been determined that the final rule does not have sufficient federalism implications to warrant the preparation of a Federalism Assessment.

E. Civil Justice Reform

This proposed rule will not have a retroactive effect. Under 49 U.S.C. section 30103, whenever a Federal motor vehicle safety standard is in effect, a state may not adopt or maintain a safety standard applicable to the same aspect of performance which is not identical to the Federal standard. 49 U.S.C. section 30106 sets forth a procedure for judicial review of final rules establishing, amending or revoking Federal motor vehicle safety standards. That section does not require submission of a petition for reconsideration or other administrative proceedings before parties may file suit in court.

List of Subjects in 49 CFR Part 571

Imports, Motor vehicle safety, Motor vehicles, Rubber and rubber products, Tires.

In consideration of the foregoing, the Federal Motor Vehicle Safety Standards (49 CFR Part 571), are amended as set forth below.

PART 571—FEDERAL MOTOR VEHICLE SAFETY STANDARDS

1. The authority citation for part 571 continues to read as follows:

Authority: 49 U.S.C. 322, 30111, 30115, 30117, and 30166; delegation of authority at 49 CFR 1.50.

2. Section 571.109 is amended by revising in S4.2.1, paragraph (d); revising S4.2.2.3.1; revising S4.2.2.3.2; revising the first sentence of S4.3 *Labeling Requirements* introductory paragraph; revising the first sentence of S4.3.5; revising S5.2.2.1; revising S5.3.2.1; revising S5.3.2.3; revising S5.4.1.2; revising S5.4.2.1; revising S5.4.2.2; revising S5.4.2.3; revising S5.5.2; revising S5.5.3; and revising S5.5.4 to read as follows:

§ 571.109 Standard No. 109, New pneumatic tires.

* * * * *

S4.2.1. *General.* Each tire shall conform to each of the following:

* * * * *

(d) It shall incorporate a tread wear indicator that will provide a visual indication that the tire has worn to a tread depth of 1.6 mm (1/16 inch).

* * * * *

S4.2.2.3.1 When a tubeless tire that has a maximum inflation pressure other than 420 kPa (60 psi) is tested in accordance with S5.2, the applied force required to unseat the tire bead at the point of contact shall be not less than:

(a) 6,670 N (1,500 pounds) for tires with a designated section width of less than 160 mm (6 inches);

(b) 8,890 N (2,000 pounds) for tires with a designated section width of 160 mm (6 inches) or more but less than 205 mm (8 inches);

(c) 11,120 N (2,500 pounds) for tires with a designated section width of 205 mm (8 inches) or more, using the section width specified in a submission made by an individual manufacturer, pursuant to S4.4.1(a), or in one of the publications described in S4.4.1(b) for the applicable tire size designation and type.

S4.2.2.3.2 When a tire that has a maximum inflation pressure of 420 kPa

(60 psi) is tested in accordance with S5.2, the applied force required to unseat the bead at the point of contact shall be not less than:

(a) 6,670 N (1,500 pounds) for tires with a maximum load rating of less than 399 kg (880 pounds);

(b) 8,890 N (2,000 pounds) for tires with a maximum load rating of 399 kg (880 pounds) or more but less than 635 kg (1,400 pounds);

(c) 11,120 N (2,500 pounds) for tires with a maximum load rating of 635 kg (1,400 pounds) or more, using the maximum load rating marked on the sidewall of the tire.

* * * * *

S4.3 *Labeling Requirements.* Except as provided in S4.3.1 and S4.3.2, each tire shall have permanently molded into or onto both sidewalls, in letters and numerals not less than 2 mm (0.078 inches) high, the information shown in paragraphs S4.3 (a) and (g). * * *

* * * * *

S4.3.5 If the maximum inflation pressure of a tire is 420 kPa (60 psi), the tire shall have permanently molded into or onto both sidewalls, in letters and numerals not less than 12.7 mm (½ inch), the words ''Inflate to 420 kPa (60 psi)''. * * *

* * * * *

S5.2.2.1 Apply a load through the block to the tire's outer sidewall at the distance specified in Figure 1 for the applicable wheel size at a rate of 50 mm (2 inches) per minute, with the load arm substantially parallel to the tire and rim assembly at the time of engagement.

* * * * *

S5.3.2.1 Force a 19 mm (¾ inch) diameter cylindrical steel plunger with a hemispherical end perpendicularly into the tread rib as near to the centerline as possible, avoiding penetration into the tread groove, at the rate of 50 mm (2 inches) per minute.

* * * * *

S5.3.2.3 Compute the breaking energy for each test point by means of one of the two following formulas:

$W=[(F\times P)/2]\times 10^{\times 3}$ (joules)

Where

W=Energy, in joules;

F=Force, Newtons; and

P=Penetration, mm; or

$W=[(F\times P)/2]$

Where

W=Energy, inch-pounds;

F=Force, pounds; and

P=Penetration, inches.

* * * * *

S5.4.1.2 Condition the tire assembly to 38°±3° C (100°±5° F) for at least three hours.

* * * * *

S5.4.2.1 Mount the tire and wheel assembly on a test axle and press it against a flat-faced steel test wheel 1708 mm (67.23 inches) in diameter and at least as wide as the section width of the tire to be tested or an approved equivalent test wheel, with the applicable test load specified in the table in S5.4.2.3 for the tire's size designation, type and maximum permissible inflation pressure.

S5.4.2.2 During the test, the air surrounding the test area shall be 38°±3° C (100°±5° F).

S5.4.2.3 Conduct the test at 80 kilometers per hour (km/h)(50 miles per hour) in accordance with the following schedule without pressure adjustment or other interruptions:

The loads for the following periods are the specified percentage of the maximum load rating marked on the tire sidewall:

	Percent
4 hours	85
6 hours	90
24 hours	100

* * * * *

S5.5.2 Break in the tire by running it for 2 hours at 80 km/h (50 mph).

S5.5.3 Allow to cool to 38°±3° C (100°±5° F) and readjust the inflation pressure to the applicable pressure specified in Table II.

S5.5.4 Without readjusting inflation pressure, test at 121 km/h (75 mph) for 30 minutes, 129 km/h (80 mph) for 30 minutes, and 137 km/h (85 mph) for 30 minutes.

* * * * *

3. In § 571.109, Figure 1—''Bead Unseating Fixture—Dimensions in Inches'', the Table titled ''Figures for Standard No. 109'', Figure 2—''Diagram of Beat Unseating Block Dimensions in Inches'', and Figure 2A—''Diagram of Bead Unseating Block—Dimensions in Inches'' after S6, and preceding Appendix A, are revised to read as follows:

BILLING CODE 4910–59–P

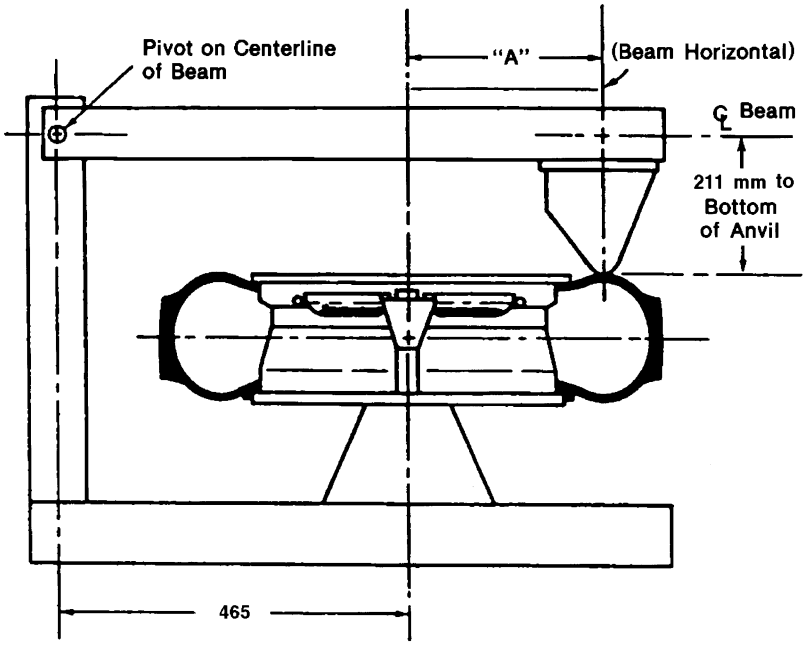

Figure 1.—Bead Unseating Fixture
All Dimensions in Millimeters (mm)

BILLING CODE 4910–59–C

FIGURES FOR STANDARD 109

Wheel sizes	Dimension "A" for tires with maximum inflation pressure			
	Other than 60 psi	Other than 420 kPa	60 psi	420 kPa
19	13.00 in	330	12.00 in	305
18	12.50 in	318	11.40 in	290
17	12.00 in	305	10.60 in	269
16	11.50 in	292	9.90 in	251
15	11.00 in	279	9.40 in	239
14	10.50 in	267	8.90 in	226
13	10.00 in	254	8.40 in	213
12	9.50 in	241		
11	9.00 in	229		
10	8.50 in	216		
320	8.50 in	216		
340	9.00 in	229		
345	9.25 in	235		
365	9.75 in	248		
370	10.00 in	254		
390	11.00 in	279		
415	11.50 in	292		
400[1]	10.25 in	260		
425[1]	10.75 in	273		
450[1]	11.25 in	286		
475[1]	11.75 in	298		
500[1]	12.25 in	311		

[1] For CT Tires only.

BILLING CODE 4910–59–P

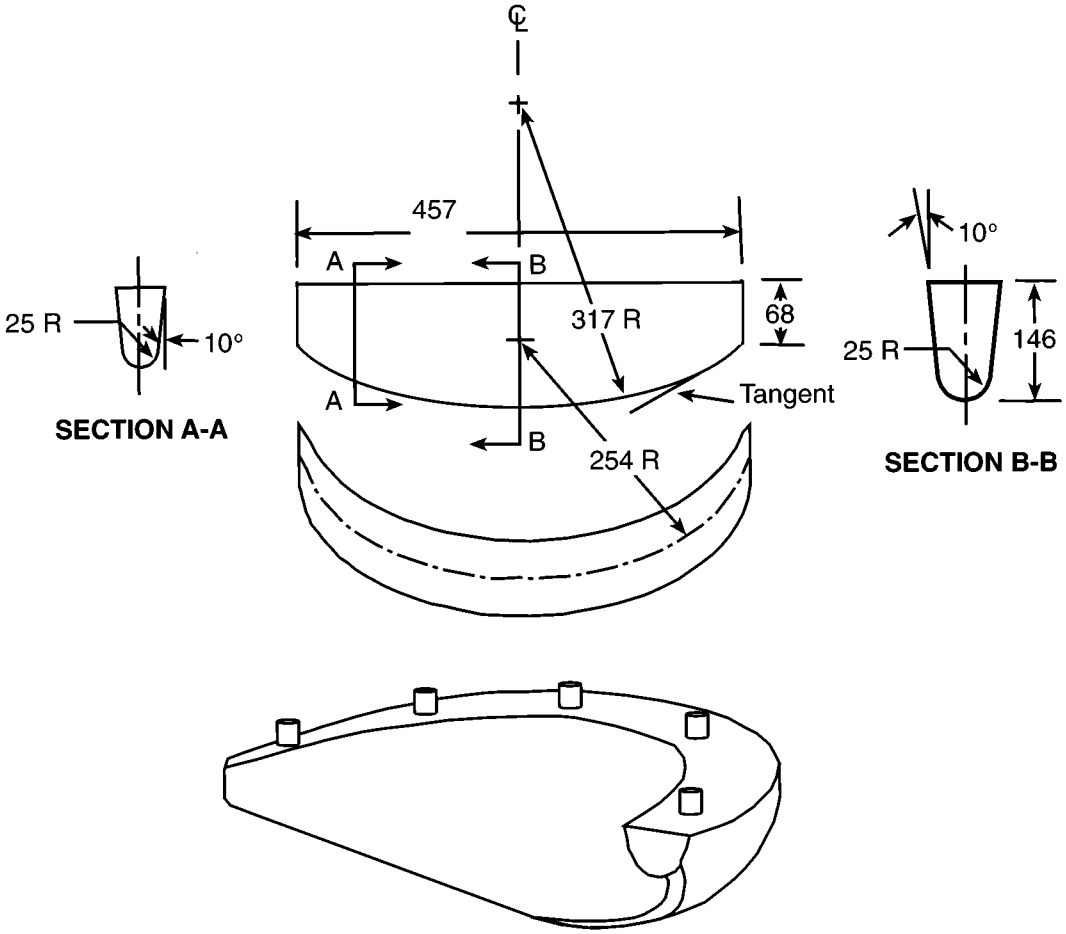

MATERIAL: Cast Aluminum 355
T-6 Condition
Finish-1.3 Micrometer (um)

Figure 2. DIAGRAM OF BEAD UNSEATING BLOCK
All dimensions in millimeters (mm)

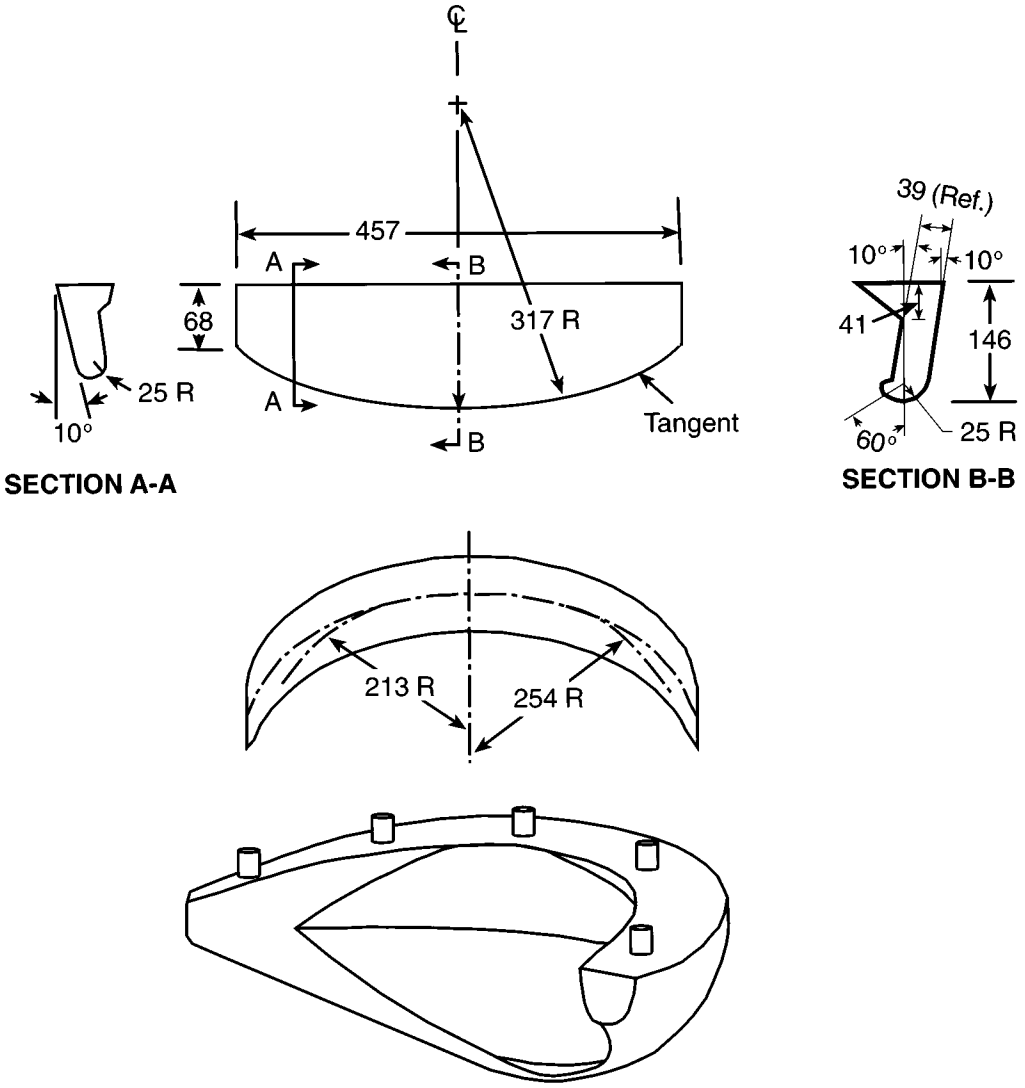

MATERIAL: Cast Aluminum 355
T-6 Condition
Finish-1.3 Micrometer (um)

Figure 2A. DIAGRAM OF BEAD UNSEATING BLOCK
All dimensions in millimeters (mm)

BILLING CODE 4910–59–C

4. In § 571.109, in Appendix A, Table 1–A—''For Bias Ply Tires with Designated Section Width of 6 Inches and Above'', Table 1–B ''For Bias Ply Tires with Designated Section Width Below 6 Inches'', Table 1–C ''For Radial Ply Tires'', Table 1–D ''For Tires with 60 lb/in² Maximum Permissible Inflation Pressure and Maximum Load Rating Below 880 Lb. And Above'', and Table 1–E ''For Tires With 60 lb/in² Maximum Permissible Inflation Pressure and Maximum Load Rating Below 880 Lb'' are revised to read as follows:

Appendix A—Federal Motor Vehicle Safety Standard No. 109

TABLE I–A.—FOR BIAS PLY TIRES WITH DESIGNATED SECTION WIDTH OF 152 MM (6 INCHES) AND ABOVE

Cord material	32 psi	36 psi	40 psi	240 kPa	280 kPa	300 kPa	340 kPa
Rayon:							
(in-lbs)	1,650	2,574	3,300	1,650	3,300	1,650	3,300
(joules)	186	291	373	186	373	186	373
Nylon or polyester:							
(in-lbs)	2,600	3,900	5,200	2,600	5,200	2,600	5,200
(joules)	294	441	588	294	588	294	588

TABLE I–B.—FOR BIAS PLY TIRES WITH DESIGNATED SECTION WIDTH BELOW 152 MM (6 INCHES)

Cord material	32 psi	36 psi	40 psi	240 kPa	280 kPa	300 kPa	340 kPA
Rayon:							
(in-lbs)	1,000	1,875	2,500	1,000	2,500	1,000	2,500
(joules)	113	212	282	113	282	113	282
Nylon or polyester:							
(in-lbs)	1,950	2,925	3,900	1,950	3,900	1,950	3,900
(joules)	220	330	441	220	441	220	441

TABLE I–C.—FOR RADIAL PLY TIRES

Size designation	Maximum permissible inflation											
	Tires other than CT tires								CT tires			
	psi			kPa					kPa			
	32	36	40	240	280	300	340	350	290	330	350	390
Below 160 mm:												
(in-lbs)	1,950	2,925	3,900	1,950	3,900	1,950	3,900	1,950	1,950	3,900	1,950	3,900
(joules)	220	330	441	220	441	220	441	220	220	441	220	441
160 mm or above:												
(in-lbs)	2,600	3,900	5,200	2,600	5,200	2,600	5,200	2,600	2,600	5,200	2,600	5,200
(joules)	294	441	588	294	588	294	588	294	294	588	294	588

TABLE I–D.—FOR TIRES WITH 420 KPA (60 PSI) MAXIMUM PERMISSIBLE INFLATION PRESSURE AND MAXIMUM LOAD RATING 399 KG (880 LB) AND ABOVE

Cord material	Inch-pounds joules (J)
Rayon	1,650 inch pounds 186 joules (J).
Nylon or Polyester	2,600 inch pounds 294 joules (J).

TABLE I–E.—FOR TIRES WITH 420 KPA (60 PSI) MAXIMUM PERMISSIBLE INFLATION PRESSURE AND MAXIMUM LOAD RATING BELOW 399 KG (880 LB)

Cord material	Inch-pounds joules (J)
Rayon	1,000 inch pounds 113 joules (J).
Nylon or Polyester	1,950 inch pounds 220 joules (J).

5. Section 571.117 is amended by revising S6.3 to read as follows:

§ 571.117 Standard No. 117, Retreaded pneumatic tires.

* * * * *

S6.3 Each retreaded tire shall bear permanent labeling through molding, branding, or other method that will produce a permanent label, or through the retention of the original casing labeling, in at least one location on the tire sidewall, in letters and numbers not less than 2 mm (0.078 inch) high, consisting of the following information:

* * * * *

6. In § 571.117, Table I—''Plies'' is revised to read as follows:

TABLE I.—PLIES

Tire Size	2ply–4ply (4 ply rating)				4 ply (6 ply rating)				4 ply (8 ply rating)			
	Maximum load		Maximum Inflation Pressure		Maximum load		Maximum Inflation Pressure		Maximum load		Maximum Inflation Pressure	
	lb	kg	psi	kPa	lb	kg	psi	kPa	lb	kg	psi	kPa
6.00–13	1010	458	32	220	1080	499	36	250	1140	517	40	275
6.50–13	1150	552	32	220	1230	558	36	250	1300	590	40	275
7.00–13	1270	576	32	220	1360	617	36	250	1440	653	40	275
6.45–14	1120	508	32	220	1200	544	36	250	1270	576	40	275
6.95–14	1230	558	32	220	1310	594	36	250	1390	630	40	275
7.35–14	1360	617	32	220	1450	658	36	250	1540	698	40	275
7.75–14	1500	680	32	220	1600	726	36	250	1690	767	40	275
8.25–14	1620	735	32	220	1730	785	36	250	1830	830	40	275
8.55–14	1770	803	32	220	1890	857	36	250	2000	907	40	275
8.85–14	1860	844	32	220	1990	903	36	250	2100	953	40	275
5.60–15	0970	440	32	220	1040	472	36	250	1105	501	40	275
5.90–15	1050	476	32	220	1130	513	36	250	1200	544	40	275
6.85–15	1230	558	32	220	1320	599	36	250	1390	630	40	275
7.35–15	1390	630	32	220	1480	671	36	250	1570	712	40	275
7.75–15	1490	676	32	220	1590	721	36	250	1690	767	40	275
8.15–15	1610	730	32	220	1720	780	36	250	1820	826	40	275
8.25–15	1620	735	32	220	1730	785	36	250	1830	830	40	275
8.45–15	1740	789	32	220	1860	844	36	250	1970	894	40	275
8.55–15	1770	803	32	220	1890	857	36	250	2000	907	40	275
8.85–15	1860	844	32	220	1980	898	36	250	2100	953	40	275
9.00–15	1900	862	32	220	2030	721	36	250	2150	975	40	275
9.15–15	1970	894	32	220	2100	953	36	250	2230	1012	40	275
8.90–15	2210	1002	32	220	2360	1070	36	250	2500	1134	40	275
A70–13	1060	481	32	220	1130	513	36	250	1200	544	40	275
D70–13	1320	599	32	220	1410	640	36	250	1490	676	40	275
D70–14	1320	599	32	220	1410	640	36	250	1490	676	40	275
E70–14	1400	635	32	220	1490	676	36	250	1580	717	40	275
F70–14	1500	680	32	220	1610	730	36	250	1700	771	40	275
G70–14	1620	735	32	220	1730	785	36	250	1830	830	40	275
H70–14	177	803	32	220	1890	857	36	250	2010	912	40	275
J70–14	1860	844	32	220	1980	898	36	250	2100	953	40	275
L70–14	1970	894	32	220	2180	989	36	250	2230	1012	40	275
C70–15	1230	558	32	220	1320	599	36	250	1390	630	40	275
D70–15	1320	599	32	220	1410	640	36	250	1490	676	40	275
E70–15	1400	635	32	220	1490	676	36	250	1580	717	40	275
F70–15	1500	680	32	220	1610	730	36	250	1700	771	40	275
G70–15	1620	735	32	220	1730	785	36	250	1830	830	40	275
H70–15	1770	803	32	220	1890	857	36	250	2010	912	40	275
J70–15	1860	844	32	220	1980	898	36	250	2100	953	40	275
K70–15	1900	862	32	220	2030	721	36	250	2150	975	40	275
L70–15	1970	894	32	220	2100	953	36	250	2230	1012	40	275
165–13	1050	476	32	220	1130	513	36	250	1200	544	40	275
175–13	1150	552	32	220	1240	562	36	250	1350	612	40	275
185–13	1270	576	32	220	1390	630	36	250	1510	685	40	275
155R13	950	431	32	220	1015	460	36	250	1075	488	40	275
155R14	1010	458	32	220	1080	499	36	250	1140	517	40	275
155R14	1015	460	32	220	1085	492	36	250	1150	552	40	275
165R13	1010	458	32	220	1080	499	36	250	1140	517	40	275
165R14	1120	508	32	220	1200	544	36	250	1370	621	40	275
165R15	1130	513	32	220	1200	544	36	250	1270	576	40	275
175R14	1230	558	32	220	1310	594	36	250	1390	630	40	275
185R14	1360	617	32	220	1450	658	36	250	1540	698	40	275
185/70R13	1090	494	32	220	1140	517	36	250	1190	540	40	275
145–14 [1]	865	392	32	220	905	411	36	250	935	424	40	275
145–15	895	406	32	220	940	426	36	250	975	442	40	275
195–15	1550	703	32	220	1680	762	36	250	1820	826	40	275
205–15	1770	803	32	220	1840	835	36	250	2000	907	40	275

[1] Dash Radial—Not an ''R'' Radial.

7. Section 571.119 is amended by revising S6.3; revising S6.4; revising in S6.5, the introductory paragraph and paragraphs (d) and (e); revising S7.1.2; revising in S7.2, paragraph (c); revising in S7.3, paragraphs (c), (e), and (f); and revising in S7.4, paragraph (c) to read as follows:

§ 571.119 Standard No. 119, New pneumatic tires for vehicles other than passenger cars.

* * * * *

S6.3 *High speed performance.* When tested in accordance with the procedures of S7.3, a tire shall meet the requirements set forth in S6.1.1 and S6.1.2(a) and (b). However, this requirement applies only to motorcycle tires and to non-speed-restricted tires of nominal rim diameter code 14.5 or less marked load range A, B, C, or D.

S6.4 *Treadwear indicators.* Except as specified in this paragraph, each tire shall have at least six treadwear indicators spaced approximately equally around the circumference of the tire that enable a person inspecting the tire to determine visually whether the tire has worn to a tread depth of 1.6 mm (one-sixteenth of an inch). Tires with a rim diameter code of 12 or smaller shall have at least three such treadwear indicators. Motorcycle tires shall have at least three such indicators which permit visual determination that the tire has worn to a tread depth of 0.8 mm (one-thirty-second of an inch).

S6.5 *Tire markings.* Except as specified in this paragraph, each tire shall be marked on each sidewall with the information specified in paragraphs (a) through (j) of this section. The markings shall be placed between the maximum section width (exclusive of sidewall decorations or curb ribs) and the bead on at least one sidewall, unless the maximum section width of the tire is located in an area which is not more than one-fourth of the distance from the bead to the shoulder of the tire. If the maximum section width falls within that area, the markings shall appear between the bead and a point one-half the distance from the bead to the shoulder of the tire, on at least one sidewall. The markings shall be in letters and numerals not less than 2 mm (0.078 inch) high and raised above or sunk below the tire surface not less that 0.4 mm (0.015 inch), except that the marking depth shall be not less than 0.25mm (0.010 inch) in the case of motorcycle tires. The tire identification and the DOT symbol labeling shall comply with part 574 of this chapter. Markings may appear on only one sidewall and the entire sidewall area may be used in the case of motorcycle tires and recreational, boat, baggage, and special trailer tires.

* * * * *

(d) The maximum load rating and corresponding inflation pressure of the tire, shown as follows:

(Mark on tires rated for single and dual load): Max load single ____kg (____lb) at ____kPa (____psi) cold. Max load dual ____kg (____lb) at ____kPa (____psi) cold.

(Mark on tires rated only for single load): Max load ____kg (____lb) at ____kPa (____psi) cold.

(e) The speed restriction of the tire, if 88 km/h (55 mph) or less, shown as follows:

Max speed ____km/h (____mph).

* * * * *

S7.1.2 The tire must be capable of meeting the requirements of S7.2 and S7.4 when conditioned to a temperature of 35° C (95° F) for 3 hours before the test is conducted, and with an ambient temperature maintained at 35° C (95° F) during all phases of testing. The tire must be capable of meeting the requirements of S7.3 when conditioned at a temperature of 21° C (70° F) for 3 hours before the test is conducted.

S7.2 *Endurance.*

* * * * *

(c) Mount the tire-rim assembly on an axle and press it against a flat-faced steel test wheel that is 1708 mm (67.23 inches) in diameter and at least as wide as the tread of the tire.

* * * * *

S7.3 *Strength.*

* * * * *

(c) Force a cylindrical steel plunger, with a hemispherical end and of the diameter specified in Table I for the tire size, perpendicularly into a raised tread element as near as possible to the centerline of the tread, at a rate of 50 mm (2 inches) per minute, until the tire breaks or the plunger is stopped by the rim.

* * * * *

(e) Repeat the plunger application at 72° intervals around the circumference of the tire, until five measurements are made. However, in the case of tires of 12 inch rim diameter code or smaller, repeat the plunger application at 120° intervals around the circumference of the tire, until three measurements are made.

(f) Compute the breaking energy for each test point by one of the two following formulas:

(1) $W = [(F \times P)/2] \times 10^{-3}$ (joules)

Where:

W = Breaking energy (in joules) (kJ)

F = Force in newtons (N) and

P = Penetration in millimeters (mm), or;

(2) $W = (FP/2)$

Where:

W = Breaking energy in inch-pounds,

F = Force in pounds,

P = Penetration in inches.

* * * * *

S7.4 *High speed performance.*

* * * * *

(c) Remove the load, allow the tire to cool to 35° C (95° F), and then adjust the pressure to that marked on the tire for single tire use.

* * * * *

8. In § 571.119, Table I—''Strength Test Plunger Diameter'', Table II—''Minimum Static Breaking Energy (Inch-Pounds)'', and Table III—''Endurance Test Schedule'' that follow paragraph (e) of S7.4 is revised to read as follows:

TABLE I.—STRENGTH TEST PLUNGER DIAMETER

	Plunger diameter	
	(mm)	(inches)
Tire type:		
Light truck	19.05	¾
Motorcycle	.....	5/16
Tires for 12 rim diameter code or smaller rims except motorcycle	19.05	¾
Tires other than the above types:		
Tubeless:		
17.5 diameter code or smaller rims	19.05	¾
Larger than 17.5 rim diameter code rims:		
Load range F or less	31.75	1¼
Load range over F	38.10	1½

TABLE I.—STRENGTH TEST PLUNGER DIAMETER—Continued

	Plunger diameter	
	(mm)	(inches)
Tube type:		
Load range F or less	31.75	1¼
Load range over F	38.10	1½

TABLE II.—MINIMUM STATIC BREAKING ENERGY (JOULES (J)* AND INCH-POUNDS (INCH-LBS))

Load range			All 12 rim diameter code or smaller rim size		Light truck 17.5 rim diameter code or smaller rim tubeless		Tube type		Tubeless		Tube type		Tubeless	
Tire characteristic	Motorcycle													
Plunger diameter (mm and inches)	7.94 J	5/16″ inch-lbs	19.05 J	3/4″ inch-lbs	19.05 J	3/4″ inch-lbs	31.75 J	1¼″ inch-lbs	J	inch-lbs	38.10 J	1½″ inch-lbs	J	inch-lbs
A	16	150	67	600	225	2,000	.....	.....	.....	.....	.....	.....	.....	.....
B	33	300	135	1,200	293	2,600	.....	.....	.....	.....	.....	.....	.....	.....
C	45	400	203	1,800	361	3,200	768	6,800	576	5,100	.....	.....	.....	.....
D	.....	.....	271	2,400	514	4,550	892	7,900	734	6,500	.....	.....	.....	.....
E	.....	.....	338	3,000	576	5,100	1,412	12,500	971	8,600	.....	.....	.....	.....
F	.....	.....	406	3,600	644	5,700	1,785	15,800	1,412	12,500	.....	.....	.....	.....
G	.....	.....	.....	.....	711	6,300	.....	.....	.....	.....	2,282	20,200	1,694	15,000
H	.....	.....	.....	.....	768	6,800	.....	.....	.....	.....	2,598	23,000	2,090	18,500
J	.....	.....	.....	.....	.....	.....	.....	.....	.....	.....	2,824	25,000	2,203	19,500
L	.....	.....	.....	.....	.....	.....	.....	.....	.....	.....	3,050	27,000	.....	.....
M	.....	.....	.....	.....	.....	.....	.....	.....	.....	.....	3,220	28,500	.....	.....
N	.....	.....	.....	.....	.....	.....	.....	.....	.....	.....	3,389	30,000	.....	.....

NOTE: For rayon cord tires, applicable energy values are 60 percent of those in table.
*J measurements are rounded down to the nearest whole number.

TABLE III.—ENDURANCE TEST SCHEDULE

Description	Load range	Test wheel speed (r/m)	Test load: Percent of maximum load rating			Total best revolutions (thousands)
			I—7 hours	II—16 hours	III—24 hours	
Speed restricted service:						
88 km/h (55 mph)						
80 km/h (50 mph)	All	125	66	84	101	352.0
	C, D	150	75	97	114	432.0
56 km/h (35 mph)	E, F, G, H, J, L	100	66	84	101	282.5
Motorcycle	All	75	66	84	101	211.0
All other	All	250	[1] 100	[2] 108	117	510.0
	A, B, C, D	250	75	[2] 97	114	.....
	E	200	70	88	106	546.0
	F	200	66	84	101	564.0
	G	175	66	84	101	493.5
	H, J, L, N	150	66	84	101	423.5

[1] 4 hr., for tire sizes subject to high speed requirements (S6.3).
[2] 6 hr., for tire sizes subject to high speed requirements (S6.3).

§ 571.120 [Amended]

9. Section 571.120 is amended by revising ''TRUCK EXAMPLE—SUITABLE TIRE-RIM CHOICE'' at the end of S5.3.2, and before S5.3.3, to read as follows:

S5.3.2. Rims.

* * * * *

TRUCK EXAMPLE—SUITABLE TIRE–RIM CHOICE
GVWR: 7,840 KG (17,289 LB)
GAWR: FRONT—2,850 KG (6,280 LB) WITH 7.50–20(D) TIRES, 20 X 6.00 RIMS AT 520 KPA (75 PSI) COLD SINGLE
GAWR: REAR—4,990 KG (11,000 LB) WITH 7.50–20(D) TIRES, 20 X 6.00 RIMS, AT 450 KPA (65 PSI) COLD DUAL
GVWR: 13,280 KG (29,279 LB)
GAWR: FRONT—4,826 KG (10,640 LB) WITH 10.00–20(F) TIRES, 20 X 7.50 RIMS, AT 620 KPA (90 PSI) COLD SINGLE
GAWR: REAR—8,454 KG (18,639 LB) WITH 10.00–20(F) TIRES, 20 X 2.70 RIMS, AT 550 KPA (80 PSI) COLD DUAL

* * * * *

Issued: May 13, 1998.

Ricardo Martinez,

Administrator.

[FR Doc. 98–13432 Filed 5–26–98; 8:45 am]

BILLING CODE 4910–59–P

DEPARTMENT OF TRANSPORTATION

National Highway Traffic Safety Administration

49 CFR Part 571

[Docket No. NHTSA–98–3836]

RIN 2127–AG55

Federal Motor Vehicle Safety Standards; Metric Conversion

AGENCY: National Highway Traffic Safety Administration (NHTSA), DOT.

ACTION: Final rule.

SUMMARY: This document revises selected Federal Motor Vehicle Safety Standards (FMVSS) by converting English measurements specified in those standards to metric measurements. This is one of several rulemaking actions that NHTSA is undertaking to implement the Federal policy that the metric system of measurement is the preferred system of weights and measures for United States trade and commerce. The conversions are not intended to make any changes in the stringency of the affected FMVSS. A companion final rule published in today's **Federal Register** converts English measurements in selected safety standards on tires to metric measurements.

DATES: This final rule is effective May 27, 1999. Optional early compliance with the changes made in this final rule is permitted beginning May 27, 1998.

ADDRESSES: Petitions for reconsideration of this final rule should refer to the docket and notice number cited in the heading of this final rule and be submitted to: Administrator, National Highway Traffic Safety Administration, 400 Seventh St., SW, Washington, DC 20590. It is requested but not required, that 10 copies be submitted.

FOR FURTHER INFORMATION CONTACT: Mr. Kevin Cavey, National Highway Traffic Safety Administration, 400 Seventh Street, SW, Washington, DC 20590. Mr. Cavey's telephone number is: (202) 366–5271.

SUPPLEMENTARY INFORMATION:

I. Background Information

Section 5164 of the Omnibus Trade and Competitiveness Act (Pub. L. 100–418), makes it United States (U.S.) policy that the metric system of measurement is the preferred system of weights and measures for United States trade and commerce. Executive Order 12770 directs Federal agencies to comply with the Act by adopting a conversion schedule for their programs by September 30, 1992. In a **Federal Register** document of April 21, 1992 (57 FR 14619), the National Highway Traffic Safety Administration (NHTSA) published its plan to use the metric system in NHTSA programs, and included an implementation schedule to convert the Federal Motor Vehicle Safety Standards (FMVSSs) to metric measurements.

In a final rule published on March 14, 1995 (60 FR 13639), NHTSA completed the first phase of metrication, converting English measurements in the following FMVSSs to the metric system: Standard No. 102, *Transmission shift lever sequence, starter interlock, and transmission braking effect;* Standard No. 103, *Windshield defrosting and defogging systems;* Standard No. 104, *Windshield wiping and washing systems;* Standard No. 107, *Reflecting surfaces;* Standard No. 110, *Tire selection and rims;* Standard No. 112, *Headlamp concealment devices;* Standard No. 114, *Theft protection;* Standard No. 115, *Vehicle identification number—basic requirements;* Standard No. 120, *Tire selection and rims for motor vehicles other than passenger cars;* Standard No. 124, *Accelerator control systems;* Standard No. 126, *Truck-camper loading;* Standard No. 205, *Glazing materials;* Standard No. 206, *Door locks and door retention components;* Standard No. 207, *Seating systems;* Standard No. 212, *Windshield mounting,* and Standard No. 216, *Roof crush resistance.*

In the March 14, 1995 final rule, NHTSA established the following principles for converting English system measurements to the metric system:

(1) Equivalent conversions are generally favored, not exact ones;

(2) The term ''mass'' is favored over the term ''weight,'' except when ''weight'' is used as part of a defined term;

(3) Force measurements are converted by specifying in the regulatory language the steps for making the conversion; and

(4) Dual measurements (i.e., both English and metric measurements) are used in a standard when it seems likely that it will be read by persons not fully accustomed to using the metric system.

NHTSA stated its intent to follow these principles in future metrication rulemakings.

II. Notice of Proposed Rulemaking for Second Phase

On April 21, 1997, NHTSA began its second phase of metricating the FMVSSs by publishing a notice of proposed rulemaking to convert English measurements in the following Federal Motor Vehicle Safety Standards to the metric system: Standard No. 101, *Controls and displays;* Standard No. 109, *New pneumatic tires;* Standard No. 111, *Rearview mirrors;* Standard No. 116, *Motor vehicle brake fluids;* Standard No. 117, *Retreaded pneumatic tires;* Standard No. 119, *New pneumatic tires for vehicles other than passenger cars;* Standard No. 123, *Motorcycle controls and displays;* Standard No. 201, *Occupant protection in interior impact;* Standard No. 202, *Head restraints;* Standard No. 203, *Impact protection for the driver from the steering control system;* Standard No. 204, *Steering control rearward displacement;* Standard No. 209, *Seat belt assemblies;* Standard No. 210, *Seat belt assembly anchorages;* Standard No. 219, *Windshield zone intrusion;* Standard No. 220, *School bus rollover protection;* Standard No. 222, *School bus passenger seating and crash protection;* Standard No. 301, *Fuel system integrity;* and Standard No. 302, *Flammability of interior materials.*

The agency raised issues concerning the following proposed conversions: [1]

A. Exact Versus Equivalent Conversions—In the NPRM, NHTSA stated that although it generally favors the use of equivalent conversions, it will not use equivalent conversions where there is a specific safety need or other reason to make an exact conversion. For certain proposed conversions (i.e., ones involving requirements that specify the height of lettering, the minimum depth to which the lettering must be impressed, or the maximum height to which it must be embossed), NHTSA proposed exact conversions, to minimize the possibility of manufacturers' having to change molds and materials.

NHTSA also noted that it proposed in the following instances to make exact conversions to avoid a possibility that the standard would become more stringent as a result of the conversion: (1) In making any conversions of gross vehicle weight ratings (GVWRs); and (2) in the specifications for the loading of test vehicles in Standard No. 219, *Windshield zone intrusion,* and Standard No. 301, *Fuel system integrity.* Certain tested vehicles must be loaded to their unloaded vehicle weight plus 300 pounds. In the NPRM, the agency proposed to convert 300 pounds to 136 kilograms, the equivalent conversion. NHTSA proposed conversion to 136 kilograms, instead of 140 kilograms, because a slight increase in the load required for Standards Nos. 219 and 301 testing (resulting from a conversion to 140 kilograms) might result in manufacturers having to conduct a separate crash test for Standard No. 219 and Standard No. 301 certification.

B. ''Mass'' vs. ''Weight''—NHTSA stated that in instances in which the safety standards use ''weight'' to mean ''mass'' in describing compliance testing conditions and procedures, or in other instances in which the standards are primarily directed to engineers or other technically trained persons, NHTSA will substitute ''mass'' for ''weight'' in the regulatory text. However, when ''weight'' is part of a term defined at 49 CFR 571.3, such as ''curb weight,''

[1] The issues relating to the other standards addressed in the NPRM are discussed in today's companion notice.

''gross axle weight rating,'' or ''unloaded vehicle weight,'' NHTSA stated it will not make any change.

C. Force Measurements—In making the metric conversion of the force measurements in Standard Nos. 220 and 222, NHTSA proposed to specify the steps of the conversion in the regulatory language, to minimize the chance of the wrong metric system conversion being made. For Standard No. 220, NHTSA proposed to amend the force measurement language (in S4) to provide that the roof of the vehicle's body structure shall be subjected to a force in Newtons equal to 1.5 times the unloaded vehicle weight, measured in kilograms and multiplied by 9.8 m/s^2. For Standard No. 222, NHTSA proposed to amend the force measurement language (in S5.1.5) to provide that the seat cushion shall not separate from the seat at any attachment point when subjected to an upward force in Newtons of 5 times the mass of the seat cushion in kilograms and multiplied by 9.8 m/s^2.

D. Dual Measurements—The agency stated its belief that converting some tables so that they contain only metric measurements would not be very informative to American mirror manufacturers or to American tire manufacturers and retreaders, many of whom may be more familiar with English measurements. Therefore, in the case of the mirror and tire standards, NHTSA proposed that the tables and regulatory text provide both the English and metric systems of measurement. Specifically, in Standard No. 111, *Rearview mirrors,* NHTSA proposed to provide both English and metric measurements for radii of curvature specified in Table I—''Conversion Table from Spherometer Dial Reading to Radius of Curvature.'' Proposed changes to the tire standards are discussed in the companion notice published in this **Federal Register** issue.

NHTSA sought public comment on the proposal to use dual measurements for the specified tables and on the period of time after which the English units of measurements should be phased out.

E. Leadtime—NHTSA proposed that, if made final, the changes proposed in the NPRM take effect one year after the publication of the final rule, with manufacturers given the option to comply immediately with the amended language.

F. Other Changes—NHTSA also proposed to correct typographical and or other nonsubstantive errors in Standard No. 207, *Seating systems,* and Standard No. 210, *Seat belt assembly anchorage,* and to remove outdated language in Standard No. 204, *Steering control rearward displacement,* and Standard No. 210, *Seat belt assembly anchorages.*

III. Public Comments and NHTSA's Response

In response to the NPRM, NHTSA received comments from eighteen commenters. The following commenters addressed only proposed metric conversions in the tire standards: Japan Automobile Tire Manufacturers Association; Goodyear; Rubber Manufacturers Association; Toyota; and the European Tyre and Rim Technical Organization. Comments on the tire standards are addressed in today's **Federal Register** notice on tire metrication.

The American Society for Testing and Materials (ASTM) sent NHTSA a copy of its 1996 version of ASTM G23 ''Practice for operating light-exposure apparatus (carbon-arc type) with and without water for exposure of nonmetallic materials'' as an example of how it was converting its recommended practices to the metric system. ASTM stated that the 1996 version has many improvements over the 1981 version.

Other commenters either addressed the principles used in making conversions, or suggested changes to specific proposed conversions. The following issues were addressed by commenters, and are followed by NHTSA's response:

Exact vs. equivalent measurements—Mr. Bruce Barrow of the Defense Information Systems Agency, on behalf of the Interagency Council on Metric Policy, cautioned NHTSA to ''avoid implying much more precision than is warranted.'' As an example of what it believed to be excess precision, the Council cited the conversion of 10,000 lbs. to 4536 kilograms for gross vehicle weight ratings (GVWRs), recommending instead that the conversion be made to 4500 kg. On the other hand, Thomas Built and Volkswagen recommended that in converting the GVWR of 10,000 lbs, the exact conversion (4536 kg) be used, not the equivalent conversion (4500 kg).

NHTSA has resolved the issue of GVWR conversions in the first round of metrication (see final rule of March 14, 1995; 60 FR 13639) and will not readdress that issue. NHTSA decided to use exact conversions for GVWR measurements because, in some industries such as school bus manufacturing, 36 kilograms (approximately 80 pounds) makes a difference in determining whether a particular school bus must meet the school bus standards for vehicles over 10,000 lbs. GVWR or vehicles under 10,000 lbs.

The California Department of Transportation (CDOT) asked that NHTSA not change references to GVWR until all truck size and weight regulations are converted to the metric system. CDOT's request is consistent with NHTSA's stated approach of not changing ''weight'' to ''mass'' when ''weight'' is part of a term defined at 49 CFR 571.3 such as ''gross vehicle weight rating'' or ''curb weight.'' Mr. Gary Vigen wrote that he favored equivalent conversions, rather than exact conversions. Mr. Vigen did not give a reason for his position.

''Mass'' vs. ''Weight''—The Interagency Council on Metric Policy commented that NHTSA should not consider redefining established terms such as ''gross vehicle weight.'' As previously noted, NHTSA agrees with this comment. The Council also recommended that because of confusion regarding the use of the word ''weight'' vs. ''mass'', that each standard include in its preface the statement: ''In this document the word 'weight' is used as a synonym for 'mass.' '' Because adopting this recommendation may make substantive changes in affected standards, NHTSA is not making the suggested change in this final rule. However, in its future metrication efforts, NHTSA will consider including the Council's recommended statement for specific safety standards.

Professor E. A. Mechtly of the University of Illinois, Urbana, commented generally that the NPRM's use of ''pound'' and ''weight'' required correction. However, since he did not specify where the terms should be corrected, NHTSA is not making any changes in response to Professor Mechtly's comments on this issue.

Force measurements—The Interagency Council on Metric Policy recommended that in converting force measurements, the seat cushion or unloaded vehicle weight, measured in kilograms, be multiplied by 10 m/s^2 rather than 9.8 m/s^2. NHTSA is not adopting this comment because, in Standard No. 220, *School bus rollover protection,* and Standard No. 222, *School bus passenger seating and crash protection,* where force measurements are used, using a factor of 10 may have the effect of making the Standards slightly more stringent than under the English measurement system. However, NHTSA notes that use of 9.8 in the Standards would not preclude a manufacturer from using a factor of 10 when conducting its compliance testing with a safety standard.

Dual Measurements—Mr. Gary Vigen wrote that he did not favor dual unit tables because ''(i)n the long run, there is less chance for error when only one set of units is used.'' The Interagency Council on Metric Policy recommended that dual measurements be avoided as much as possible. Land Rover questioned the necessity for dual English and metric measurements when ''information is intended to be used by people in the manufacturing industry.''

NHTSA agrees with the commenters that ideally, dual measurements need not be used. However, as stated in the NPRM, NHTSA believes that converting some tables so that they contain only metric measurements may not be very informative for American mirror manufacturers or for American tire manufacturers or retreaders, who may be more familiar with the English system. NHTSA received no comment addressing whether mirror manufacturers are familiar with the metric system and therefore do not need dual measurements. NHTSA is adopting the proposal in the NPRM for using dual measurements in Standard No. 111, *Rearview mirrors*. Dual measurements for the tire standards are addressed in today's companion final rule on metricating the tire standards.

Other Changes—Many commenters, including Ford, General Motors, Land Rover, Mitsubishi, Volkswagen, and Transport Canada commented on specific proposed changes to the safety standards. Many of the comments noted typographical errors, or provided the correct abbreviation for a metric measurement. NHTSA is adopting all of these technical comments. In particular, General Motors noted that NHTSA did not propose to convert to metric measurements, Figure 1 to Standard No. 219, *Windshield zone intrusion*. The oversight has been corrected in the final rule.

Land Rover also stated that in part 583, *Automobile Parts Content Labeling*, the ''example provided * * * does not comply with the labeling typeface requirements (block capitals) in the regulation/standard.'' NHTSA does not believe that the ''PARTS CONTENT INFORMATION'' example provided for part 583 requires correction from the existing lower case to upper case because the specified information is correct. NHTSA is therefore not adopting Land Rover's suggestion.

NHTSA is not adopting Professor Mechtly's suggested changes to Standard No. 126, *Truck-camper loading*, because that standard was not proposed to be amended in the April 1997 notice of proposed rulemaking. NHTSA is also not adopting Professor Mechtly's recommended language for Standard No. 220, *Schoolbus rollover protection*, because it believes that adopting the language might result in a substantive change to the standard.

Ford noted that, in Standard No. 111, *Rearview mirrors*, NHTSA did not propose to convert Figure 3. NHTSA notes that Figure 3 ''Camera Locations for School Bus Field-of-View Test'' is already described in both metric and English system measurements.

Standard No. 201—In the notice of proposed rulemaking, NHTSA proposed metricating Standard No. 201, *Occupant Protection in Interior Impacts*. However, on April 8, 1997 (62 FR 16718), NHTSA published a final rule metricating Standard No. 201. Since Standard No. 201 has already been metricated, this final rule will not make changes to Standard No. 201.

Leadtime—In the NPRM, NHTSA proposed that, if made final, the changes in the NPRM take effect one year after the final rule is published in the **Federal Register**. NHTSA received no comments relating to the leadtime that should be provided for changes to standards for products other than tires. Thus, for the non-tire FMVSSs, the changes in this final rule will take effect one year after the publication of this final rule. Today's companion **Federal Register** notice addressing metric conversions in the tire standards addresses leadtime for the tire standards.

IV. Regulatory Impacts

A. Executive Order 12866 and DOT Regulatory Policies and Procedures

NHTSA has examined the impact of this rulemaking action under E.O. 12866 and the Department of Transportation's regulatory policies and procedures. This rulemaking document was not reviewed under E. O. 12866, ''Regulatory Planning and Review.'' This action has been determined to be not ''significant'' under DOT's regulatory policies and procedures.

In converting the Federal Motor Vehicle Safety Standards from the English to the metric measurement system, the agency has made conversions in a way that does not substantively change the performance requirements of the FMVSS's. As a result of this rule, manufacturers now providing consumer information (e.g., labeling) may incur minimal additional costs since they would have to change their information to add the metric units. However, the agency believes additional costs would be minuscule, since manufacturers currently label and provide consumer information in English units. The impacts of this action are so minor that a full regulatory evaluation for this proposed rule has not been prepared.

B. Regulatory Flexibility Act

The agency has also considered the effects of this rulemaking action under the Regulatory Flexibility Act (5 U.S.C. 601 *et seq.*). I certify that this final rule will not have a significant economic impact on a substantial number of small entities. The rationale for this certification is that converting the FMVSS from the English system to the metric system will not substantively change the performance requirements of any of the Federal Motor Vehicle Safety Standards. Manufacturers that qualify as small businesses that have not been labeling their products in metric units or provide consumer information in metric units will incur some costs to include metric information on their labeling. However, the agency believes such costs will be minimal, given these manufacturers are currently labeling and providing the consumer information in English units.

C. Environmental Impacts

In accordance with the National Environmental Policy Act of 1969, the agency has considered the environmental impacts of this rulemaking action and determined that, as a final rule, it will not have a significant impact on the quality of the human environment.

D. Federalism

This action has been analyzed in accordance with the principles and criteria contained in Executive Order 12612, and it has been determined that the final rule does not have sufficient federalism implications to warrant the preparation of a Federalism Assessment.

E. Civil Justice Reform

This rule will not have a retroactive effect. Under 49 U.S.C. section 30103, whenever a Federal motor vehicle safety standard is in effect, a state may not adopt or maintain a safety standard applicable to the same aspect of performance which is not identical to the Federal standard. 49 U.S.C. section 30106 sets forth a procedure for judicial review of final rules establishing, amending or revoking Federal motor vehicle safety standards. That section does not require submission of a petition for reconsideration or other administrative proceedings before parties may file suit in court.

List of Subjects in 49 CFR Part 571

Imports, Motor vehicle safety, Motor vehicles, Rubber and rubber products, Tires.

In consideration of the foregoing, the Federal Motor Vehicle Safety Standards (49 CFR part 571), are amended as set forth below.

PART 571—FEDERAL MOTOR VEHICLE SAFETY STANDARDS

1. The authority citation for part 571 continues to read as follows:

Authority: 49 U.S.C. 322, 30111, 30115, 30117, and 30166; delegation of authority at 49 CFR 1.50.

2. Section 571.101 is amended by revising S5(a) and revising S5.3.5 to read as follows:

§ 571.101 Standard No. 101, Controls and displays.

* * * * *

S5. *Requirements.* (a) Except as provided in paragraph (b) of this section, each passenger car, multipurpose passenger vehicle, truck and bus manufactured with any control listed in S5.1 or in column 1 of Table 1, and each passenger car, multipurpose passenger vehicle and truck or bus less than 4,536 kg GVWR with any display listed in S5.1 or in column 1 of Table 2 shall meet the requirements of this standard for the location, identification, and illumination of such control or display.

* * * * *

S5.3.5 Any source of illumination within the passenger compartment which is forward of a transverse vertical plane 110 mm rearward of the manikin ''H'' point with the driver's seat in its rearmost driving position, which is not used for the controls and displays regulated by this standard, which is not a telltale, and which is capable of being illuminated while the vehicle is in motion, shall have either (1) light intensity which is manually or automatically adjustable to provide at least two levels of brightness, (2) a single intensity that is barely discernible to a driver who has adapted to dark ambient roadway conditions, or (3) a means of being turned off. This requirement does not apply to buses that are normally operated with the passenger compartment illuminated.

* * * * *

3. Section 571.101 is amended by revising Table 1 and Table 2 that follow S6 to read as follows:

BILLING CODE 4910–59–P

Table 1
Identification and Illustration of Controls

Column 1	Column 2	Column 3	Column 4
Hand Operated Controls	*Identifying Words or Abbreviation*	*Identifying Symbol*	*Illumination*
MASTER LIGHTING SWITCH	Lights	[5]	—
HEADLAMPS AND TAIL LAMPS	(Manufacturer Option) [2]	(Manufacturer Option) [2]	—
HORN	Horn		—
TURN SIGNAL	—	[3] [5]	—
HAZARD WARNING SIGNAL	Hazard	[5]	Yes
WINDSHIELD WIPING SYSTEM	Wiper or Wipe		Yes
WINDSHIELD WASHING SYSTEM	Washer or Wipe		Yes
WINDSHIELD WASHING AND WIPING COMBINED	Wash-Wipe or Washer-Wiper		Yes
HEATING AND OR AIR CONDITIONING FAN	Fan	or	Yes
WINDSHIELD DEFROSTING AND DEFOGGING SYSTEM	Defrost, Defrog or Def.		Yes
REAR WINDOW DEFROSTING AND DEFOGGING SYSTEM	Rear Defrost, Rear Defog. Rear Def., or R-Def.		Yes
IDENTIFICATION, SIDE MARKER AND OR CLEARANCE LAMPS	Marker Lamps or MK Lps		Yes
MANUAL CHOKE	Choke	—	—
ENGINE START	Engine Start[1]	—	—
ENGINE STOP	Engine Stop[1]	—	Yes
HAND THROTTLE	Throttle	—	—
AUTOMATIC VEHICLE SPEED	(Manufacturer Option)	—	Yes
HEATING AND AIR CONDITIONING SYSTEM	(Manufacturer Option)	(Manufacturer Option)	Yes

[1] Use when engine control is separate from the key locking system.

[2] Separate idenfication not required if controlled by master lighting switch.

[3] The pair of arrows is a single symbol. When the controls for left and right turn operate independently, however, the two arrows may be considered separate symbols and be spaced accordingly.

[4] Identification not required for vehicles when a GVWR greater then 10,000 lbs., or or narrow ring-type controls.

[5] Framed areas may be filed.

Table 2
Identification and Illustration of Displays

Column 1	Column 2	Column 3	Column 4	Column 5
Display	*Telltale Color*	*Identifying Words or Abbreviation*	*Identifying Symbol*	*Illumination*
TURN SIGNAL Telltale	Green	Also see FMVSS 108	[1] [6]	—
HAZARD WARNING Telltale		Also see FMVSS 108	[2] [6]	—
SEAT BELT Telltale	— [7]	Fasten Belts or Fasten Seat Belts Also see FMVSS 208	or	—
FUEL LEVEL Telltale		Fuel	or	—
Gauge	—			Yes
OIL PRESSURE Telltale		Oil		—
Gauge	—			Yes
COOLANT TEMPERATURE Telltale		Temp		—
Gauge	—			Yes
ELECTRICAL CHARGE Telltale		Volts, Charge or Amp		—
Gauge	—			Yes
HIGHBEAM Telltale	Blue or Green [4]	Also see FMVSS 108	[6]	—
Brake System [8]	Red [4]	Brake, Also see FMVSS 105 and 135	—	—
MALFUNCTION IN Anti-Lock or	Yellow	Antilock, Anti-lock, or ABS. Also see FMVSS 105 and 135	—	—
VARIABLE BRAKE PROPORTIONING SYSTEM[8]	Yellow	Brake Propositioning, Also see FMVSS 135	—	—
PARKING BRAKE APPLIED[8]	Red [4]	Park or Parking Brake, Also see FMVSS 105 and 135	—	—
MALFUNCTION IN Anti-Lock or	Yellow	ABS, or Antilock; Trailer ABS, or Trailer Antilock, Also see FMVSS 121	—	—
BRAKE AIR PRESSURE Position Telltale		Brake Air, Also see FMVSS 121	—	—
SPEEDOMETER	—	MPH km/h [5]	—	Yes
ODOMETER	—	— [3]	—	—
AUTOMATIC GEAR POSITION	—	Also see FMVSS 102	—	Yes

[1] The pair of arrows is a single symbol. When the indicator for left and right turn operate independently, however, the two arrows will be considered separate symbols and may be spaced accordingly.

[2] Not required when arrows of turn signal tell-tales that otherwise operate independently flash simultaneously as hazard warning tell-tale.

[3] If the odometer indicates kilometers, then "KILOMETERS" or "km" shall appear, otherwise, no identification is required.

[4] Red can be red-orange. Blue can be blue-green.

[5] If the speedometer is graduated in miles per hour and in kilometers per hour, the identifying words or abbreviations shall be "MPH and km/h" in any combination of upper or lower case letters.

[6] Framed areas may be filled.

[7] The color of the telltale required by S4.5.3.3 of Standard No 208 is red; the color of the telltale required by S7.3 of Standard No. 208 is not specified.

BILLING CODE 4910–59–C

4. Section 571.111 is amended by revising S5.1.1; revising S5.1.2; revising S5.2.1; revising S5.4.2; revising S5.4.3; revising S6; revising S6.1; revising S7; revising S7.1; revising S8; revising S8.1; revising S9.2; revising S9.3; revising S10.1; revising S12.2; revising S12.3; revising S12.4; and revising S13.2 to read as follows:

§ 571.111 Standard No. 111, Rearview mirrors.

* * * * *

S5.1.1 *Field of view*. Except as provided in S5.3, the mirror shall provide a field of view with an included horizontal angle measured from the projected eye point of at least 20 degrees, and sufficient vertical angle to provide a view of a level road surface extending to the horizon beginning at a point not greater than 60 m to the rear of the vehicle when the vehicle is occupied by the driver and four passengers or the designated occupant capacity, if less, based on an average occupant weight of 68 kg. The line of sight may be partially obscured by seated occupants or by head restraints. The location of the driver's eye reference points shall be those established in Motor Vehicle Safety Standard No. 104 (§ 571.104) or a nominal location appropriate for any 95th percentile male driver.

S5.1.2 *Mounting*. The mirror mounting shall provide a stable support for the mirror, and shall provide for mirror adjustment by tilting in both the horizontal and vertical directions. If the mirror is in the head impact area, the mounting shall deflect, collapse or break away without leaving sharp edges when the reflective surface of the mirror is subjected to a force of 400 N in any forward direction that is not more than 45° from the forward longitudinal direction.

S5.2.1 *Field of view*. Each passenger car shall have an outside mirror of unit magnification. The mirror shall provide the driver a view of a level road surface extending to the horizon from a line, perpendicular to a longitudinal plane tangent to the driver's side of the vehicle at the widest point, extending 2.4 m out from the tangent plane 10.7 m behind the driver's eyes, with the seat in the rearmost position. The line of sight may be partially obscured by rear body or fender contours. The location of the driver's eye reference points shall be those established in Motor Vehicle Safety Standard No. 104 (§ 571.104) or a nominal location appropriate for any 95th percentile male driver.

* * * * *

S5.4.2 Each convex mirror shall have permanently and indelibly marked at the lower edge of the mirror's reflective surface, in letters not less than 4.8 mm nor more than 6.4 mm high the words ''Objects in Mirror Are Closer Than They Appear.''

S5.4.3 The average radius of curvature of each such mirror, as determined by using the procedure in S12., shall be not less than 889 mm and not more than 1,651 mm.

S6. *Requirements for multipurpose passenger vehicles, trucks, and buses, other than school buses, with GVWR of 4,536 kg or less.*

S6.1 Each multipurpose passenger vehicle, truck and bus, other than a school bus, with a GVWR of 4,536 kg or less shall have either—

(a) Mirrors that conform to the requirements of S5.; or

(b) Outside mirrors of unit magnification, each with not less than 126 cm² of reflective surface, installed with stable supports on both sides of the vehicle, located so as to provide the driver a view to the rear along both sides of the vehicle, and adjustable in both the horizontal and vertical directions to view the rearward scene.

S7. *Requirements for multipurpose passenger vehicles and trucks with a GVWR of more than 4,536 kg and less than 11,340 kg and buses, other than school buses, with a GVWR of more than 4,536 kg.*

S7.1 Each multipurpose passenger vehicle and truck with a GVWR of more than 4,536 kg and less than 11,340 kg and each bus, other than a school bus, with a GVWR of more than 4,536 kg shall have outside mirrors of unit magnification, each with not less than 323 cm² of reflective surface, installed with stable supports on both sides of the vehicle. The mirrors shall be located so as to provide the driver a view to the rear along both sides of the vehicle and shall be adjustable both in the horizontal and vertical directions to view the rearward scene.

S8. *Requirements for multipurpose passenger vehicles and trucks with a GVWR of 11,340 kg or more.*

S8.1 Each multipurpose passenger vehicle and truck with a GVWR of 11,340 kg or more shall have outside mirrors of unit magnification, each with not less than 323 cm² of reflective surface, installed with stable supports on both sides of the vehicle. The mirrors shall be located so as to provide the driver a view to the rear along both sides of the vehicle and shall be adjustable both in the horizontal and vertical directions to view the rearward scene.

* * * * *

S9.2 System A shall be located with stable supports so that the portion of the system on the bus's left side, and the portion on its right side, each:

(a) Includes at least one mirror of unit magnification with not less than 323 cm² of reflective surface; and

(b) Includes one or more mirrors which together provide, at the driver's eye location, a view of:

(1) For the mirror system on the right side of the bus, the entire top surface of cylinder N in Figure 2, and of that area of the ground which extends rearward from the mirror surface not less than 61 meters.

(2) For the mirror system on the left side of the bus, the entire top surface of cylinder M in Figure 2, and of that area of the ground which extends rearward from the mirror surface not less than 61 meters.

S9.3(a) For each of the cylinders A though P whose entire top surface is not directly visible from the driver's eye location, System B shall provide, at that location:

(1) A view of the entire top surface of that cylinder.

(2) A view of the ground that overlaps with the view of the ground provided by System A.

(b) Each mirror installed in compliance with S9.3(a) shall meet the following requirements:

(1) Each mirror shall have a projected area of at least 258 cm², as measured on a plane at a right angle to the mirror's axis.

(2) Each mirror shall be located such that the distance from the center point of the eye location of a 25th percentile adult female seated in the driver's seat to the center of the mirror shall be at least 95 cm².

(3) Each mirror shall have no discontinuities in the slope of the surface of the mirror.

(4) Each mirror shall be installed with a stable support.

(c) Each school bus which has a mirror installed in compliance with S9.3(a) that has an average radius of curvature of less than 889 mm, as determined under S12, shall have a label visible to the seated driver. The label shall be printed in a type face and color that are clear and conspicuous. The label shall state the following:

''USE CROSS VIEW MIRRORS TO VIEW PEDESTRIANS WHILE BUS IS STOPPED. DO NOT USE THESE MIRRORS TO VIEW TRAFFIC WHILE BUS IS MOVING. IMAGES IN SUCH MIRRORS DO NOT ACCURATELY SHOW ANOTHER VEHICLE'S LOCATION.''

* * * * *

S10.1 Each motorcycle shall have either a mirror of unit magnification

with not less than 8065 mm² of reflective surface, or a convex mirror with not less than 6450 mm² of reflective surface and an average radius of curvature not less than 508 mm and not greater than 1524 mm, installed with a stable support, and mounted so that the horizontal center of the reflective surface is at least 279 mm outward of the longitudinal centerline of the motorcycle. The mirror shall be adjustable by tilting in both the horizontal and vertical directions.

* * * * *

S12.2 The 3-point linear spherometer has two outer fixed legs 38 mm apart and one inner movable leg at the midpoint. The spherometer has a dial indicator with a scale that can be read accurately to .0025 mm, with the zero reading being a flat surface.

S12.3 The 10 test positions on the image display consist of two positions at right angles to each other at each of five locations as shown in Figure 1. The locations are at the center of the mirror, at the left and right ends of a horizontal line that bisects the mirror and at the top and bottom ends of a vertical line that bisects the mirror. None of the readings are within a 6.4 mm border on the edge of the image display.

S12.4 At each position, the spherometer is held perpendicular to the convex mirror-surface and a record is made of the reading on the dial indicator to the nearest .0025 mm.

* * * * *

S13.2 The cylinders are 0.3048 m high and 0.3048 m in diameter, except for cylinder P which is 0.9144 m high and 0.3048 m in diameter.

* * * * *

5. In § 571.111, Table I—''Conversion Table from Spherometer Dial Reading to Radius of Curvature'', following Figure 1 in S12.8, would be revised to read as follows:

TABLE I.—CONVERSION TABLE FROM SPHEROMETER DIAL READING TO RADIUS OF CURVATURE

Dial reading	Radius of curvature (inches)	Radius of curvature (mm)
.00330	85.2	2164.1
.00350	80.4	2042.2.
.00374	75.2	1910.1
.00402	70.0	1778.0
.00416	67.6	1717.0
.00432	65.1	1653.5
.00450	62.5	1587.5
.00468	60.1	1526.5
.00476	59.1	1501.1
.00484	58.1	1475.7
.00492	57.2	1452.9
.00502	56.0	1422.4
.00512	54.9	1394.5
.00522	53.8	1369.1
.00536	55.5	1333.5
.00544	51.7	1313.2
.00554	50.8	1290.3
.00566	49.7	1262.4
.00580	48.5	1231.9
.00592	47.5	1206.5
.00606	46.4	1178.6
.00622	45.2	1148.1
.00636	44.2	1122.7
.00654	43.0	1092.2
.00668	42.1	1069.3
.00686	41.0	1041.1
.00694	40.5	1028.7
.00720	39.1	993.1
.00740	38.0	965.2
.00760	37.0	939.8
.00780	36.1	916.9
.00802	35.1	891.5
.00922	34.2	868.7
.00850	33.1	840.7
.00878	32.0	812.8
.00906	31.0	787.4
.00922	30.5	774.7
.00938	30.0	762.0
.00960	29.3	744.2
.00980	28.7	728.9
.01004	28.0	711.2
.01022	27.5	698.5
.01042	27.0	685.8
.01060	26.5	673.1
.01080	26.0	660.4
.01110	25.3	642.6
.01130	24.9	632.5

TABLE I.—CONVERSION TABLE FROM SPHEROMETER DIAL READING TO RADIUS OF CURVATURE—Continued

Dial reading	Radius of curvature (inches)	Radius of curvature (mm)
.01170	24.0	609.6
.01200	23.4	594.4
.01240	22.7	576.6
.01280	22.0	558.8
.01310	21.5	546.1
.01360	20.7	525.8
.01400	20.1	510.5
.01430	19.1	500.4
.01460	19.0	482.6
.01540	18.3	464.8
.01570	17.9	454.7
.01610	17.5	444.5
.01650	17.1	434.3
.01700	16.6	421.6
.01750	16.1	408.9
.01800	15.6	396.2
.01860	15.1	383.5
.01910	14.7	373.4
.01980	14.2	360.7
.02040	13.8	350.5
.02100	13.4	340.4
.02160	13.0	330.2
.02250	12.5	317.5
.02340	12.0	304.8
.02450	11.5	292.1
.02560	11.2	279.4
.02680	10.5	266.7
.02810	10.0	254.0
.02960	9.5	241.3
.03130	9.0	228.6
.03310	8.5	215.9

6. In § 571.111, Figure 2 ''Location of Test Cylinders for School Bus Field-of-View Test'', after S13.3(g), is revised to read as follows:

BILLING CODE 4910–59–P

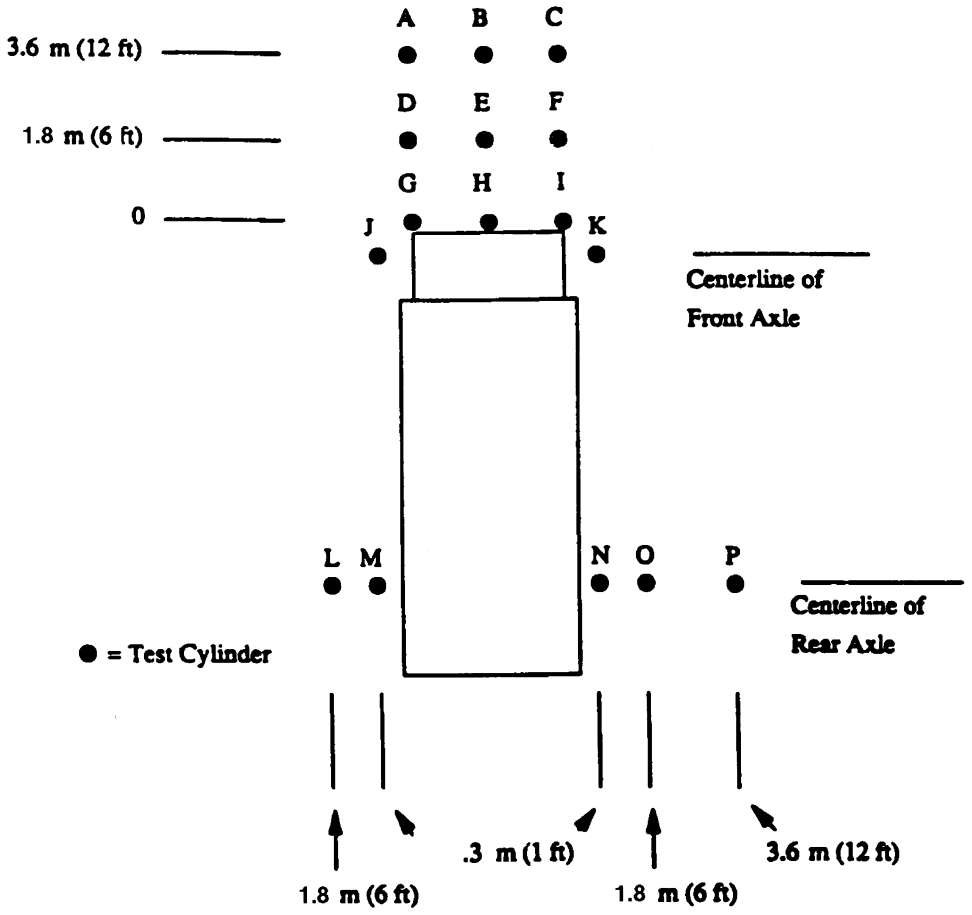

Figure 2.—Location of Test Cylinders for School Bus Field-of-View Test
All Dimensions in Meters (m)

BILLING CODE 4910–59–C

7. Section 571.116 is amended by revising S5.1.3; revising S5.2.1; revising in S5.2.2.2, the introductory paragraph and paragraph (g)(4); revising in S5.2.2.3, the introductory paragraph, paragraph (d) and paragraph (e)(4); revising S6.3; revising in S6.6.6, paragraph (a); revising S6.8.3; revising in S6.10.3, paragraph (a); revising S6.11.1; revising S6.11.6; revising, in S6.13.2, paragraph (b); revising in S6.13.3, paragraph (b), revising in S6.13.4, paragraph (c)(1); revising S7.4.2; and revising in S7.5.1, paragraph (b), to read as follows:

§ 571.116 Standard No. 116, Motor vehicle brake fluids.

* * * * *

S5.1.3. *Kinematic viscosities.* When brake fluid is tested according to S6.3, the kinematic viscosities in square millimeters per second at stated temperatures shall be neither less than 1.5 mm^2/s at 100° C. (212° F.) nor more than the following maximum value for the grade indicated:

(a) DOT 3: 1,500 mm^2/s at minus 40° C. (minus 40° F.).

(b) DOT 4: 1,800 mm^2/s at minus 40° C. (minus 40° F.).

(c) DOT 5: 900 mm^2/s at minus 40° C. (minus 40° F.).

* * * * *

S5.2.1 *Container sealing.* Each brake fluid or hydraulic system mineral oil container with a capacity of 177 mL or more shall be provided with a resealable closure that has an inner seal impervious to the packaged brake fluid. The container closure shall include a tamper-proof feature that will either be destroyed or substantially altered when the container closure is initially opened.

* * * * *

S5.2.2.2 Each packager of brake fluid shall furnish the information specified in paragraphs (a) through (g) of this S5.2.2.2 by clearly marking it on each brake fluid container or on a label (labels) permanently affixed to the container, in any location except a removable part such as a lid. After being subjected to the operations and conditions specified in S6.14, the information required by this section shall be legible to an observer having corrected visual acuity of 20/40 (Snellen ratio) at a distance of 305 mm, and any label affixed to the container in compliance with this section shall not be removable without its being destroyed or defaced.

* * * * *

(g) * * *

(4) *CAUTION:* DO NOT REFILL CONTAINER, AND DO NOT USE FOR OTHER LIQUIDS. (Not required for containers with a capacity in excess of 19 L.)

S5.2.2.3 Each packager of hydraulic system mineral oil shall furnish the information specified in paragraphs (a) through (e) of this S5.2.2.3 by clearly marking it on each brake fluid container or on a label (labels) permanently affixed to the container, in any location except a removable part such as a lid. After being subjected to the operations and conditions specified in S6.14, the information required by this section shall be legible to an observer having corrected visual acuity of 20/40 (Snellen ratio) at a distance of 305 mm and any label affixed to the container in compliance with this section shall not be removable without its being destroyed or defaced.

* * * * *

(d) Designation of the contents as ''HYDRAULIC SYSTEM MINERAL OIL'' in capital letters at least 3 mm high.

(e) The following safety warnings in capital and lowercase letters as indicated:

* * * * *

(4) *CAUTION:* STORE HYDRAULIC SYSTEM MINERAL OIL ONLY IN ITS ORIGINAL CONTAINER. KEEP CONTAINER CLEAN AND TIGHTLY CLOSED. DO NOT REFILL CONTAINER OR USE OTHER LIQUIDS. (The last sentence is not required for containers with a capacity in excess of 19 L.)

* * * * *

S6.3 *Kinematic viscosity.* Determine the kinematic viscosity of a brake fluid in mm^2s by the following procedure. Run duplicate samples at each of the specified temperatures, making two timed runs on each sample.

* * * * *

S6.6.6 *Calculation*

(a) Measure the area of each type of test strip to the nearest square centimeter. Divide the average change in mass for each type by the area of that type.

* * * * *

S6.8.3 *Procedure.* Obtain the tare weight of each of the four covered petri dishes to the nearest 0.01 gram. Place 25±1 ml. of brake fluid in each dish, replace proper covers and reweigh. Determine the weight of each brake fluid test specimen by the difference. Place the four dishes, each inside its inverted cover, in the oven at 100°±2° C. (212°±4° F.) for 46±2 hours. (Note: Do not simultaneously heat more than one fluid in the same oven.) Remove the dishes from the oven, allow to cool to 23°±5° C. (73.4°±9° F.), and weigh. Return to the oven for an additional 24±2 hours. If at the end of 72±4 hours the average loss by evaporation is less than 60 percent, discontinue the evaporation procedure and proceed with examination of the residue. Otherwise, continue this procedure either until equilibrium is reached as evidenced by an incremental mass loss of less than 0.25 gram in 24 hours on all individual dishes or for a maximum of 7 days. During the heating and weighing operation, if it is necessary to remove the dishes from the oven for a period of longer than 1 hour, the dishes shall be stored in a desiccator as soon as cooled to room temperature. Calculate the percentage of fluid evaporated from each dish. Examine the residue in the dishes at the end of 1 hour at 23°±5° C. (73.4°±9° F.). Rub any sediment with the fingertip to determine grittiness or abrasiveness. Combine the residues from all four dishes in a 118 mL (4-ounce) oil-sample bottle and store vertically in a cold chamber at minus 5°±1° C. (23°±5° F.) for 60±10 minutes. Quickly remove the bottle and place in the horizontal position. The residue must flow at least 5 mm (0.2 inch) along the tube within 5 seconds.

* * * * *

S6.10.3 *Procedure*

(a) *At low temperature.*

Mix 50±0.5 mL of brake fluid with 50±0.5 mL of SAE RM–66–04 Compatibility Fluid. Pour this mixture into a centrifuge tube and stopper with a clean dry cork. Place tube in the cold chamber maintained at minus 40°±2° C. (minus 40°±4° F). After 24±2 hours, remove tube, quickly wipe with a clean lint-free cloth saturated with ethanol (isopropanol when testing DOT 5 fluids) or acetone. Examine the test specimen for evidence of slugging, sedimentation, or crystallization. Test fluids, except DOT 5 SBBF, shall be examined for stratification.

* * * * *

S6.11.1 *Summary of procedure.*

Brake fluids, except DOT 5 SBBF, are activated with a mixture of approximately 0.2 percent benzoyl peroxide and 5 percent water. DOT 5 SBBF is humidified in accordance with S6.2 eliminating determination of the ERBP, and then approximately 0.2 percent benzoyl peroxide is added. A corrosion test strip assembly consisting of cast iron and an aluminum strip separated by tinfoil squares at each end is then rested on a piece of SBR WC cup positioned so that the test strip is half immersed in the fluid and oven aged at 70° C. (158° F.) for 168 hours. At the end of this period, the metal strips are examined for pitting, etching, and loss of mass.

* * * * *

S6.11.6 *Calculation.* Determine corrosion loss by dividing the change in mass of each metal strip by the total surface area of each strip measured in square millimeters (mm^2), to the nearest square millimeter (mm^2). Average the results for the two strips of each type of metal, rounding to the nearest 0.05 mg. per 100 square millimeter (mm^2). If only one of the duplicates fails for any reason, run a second set of duplicate samples. Both repeat samples shall meet all requirements of S5.1.11.

* * * * *

S6.13.2 *Apparatus and equipment.*

* * * * *

(b) *Braking pressure actuation mechanism.* An actuating mechanism for applying a force to the master cylinder pushrod without side thrust. The amount of force applied by the actuating mechanism shall be adjustable and capable of applying sufficient thrust to the master cylinder to create a pressure of at least 6895 kPa (1,000 p.s.i.) in the simulated brake system. A hydraulic gage or pressure recorder, having a range of at least 0 to 6895 kPa (0 to 1,000 p.s.i), shall be installed between the master cylinder and the brake assemblies and shall be provided with a shutoff valve and with a bleeding valve for removing air from the connecting tubing. The actuating mechanism shall be designed to permit adjustable stroking rates of approximately 1,000 strokes per hour. Use a mechanical or electrical counter to record the total number of strokes.

* * * * *

S6.13.3 *Materials.*

* * * * *

(b) *Steel tubing.* Double wall steel tubing meeting SAE specification J527. A complete replacement of tubing is essential when visual inspection indicates any corrosion or deposits on inner surface of tubing. Tubing from master cylinder to one wheel cylinder shall be replaced for each test (minimum length .9 m.) Uniformity in tubing size is required between master cylinder and wheel cylinder. The standard master cylinder has two outlets for tubing, both of which must be used.

* * * * *

S6.13.4 *Preparation of test apparatus.*

* * * * *

(c) *Assembly and adjustment of test apparatus.*

(1) When using a shoe and drum type apparatus, adjust the brake shoe toe clearances to 1.0±0.1 mm (0.040±0.004 inch). Fill the system with brake fluid, bleeding all wheel cylinders and the pressure gage to remove entrapped air. Operate the actuator manually to apply a pressure greater than the required operating pressure and inspect the system for leaks. Adjust the actuator and/or pressure relief valve to obtain a pressure of 6895 kPa±345 kPa (1,000±50 p.s.i.). A smooth pressure stroke pattern is required when using a shoe and drum type apparatus. The pressure is relatively low during the first part of the stroke and then builds up smoothly to the maximum stroking pressure at the end of the stroke, to permit the primary cup to pass the compensating hole at a relatively low pressure. Using stroking fixtures, adjust the actuator and/or pressure relief valve to obtain a pressure of 6895 kPa±345 kPa (1,000±50 p.s.i.).

* * * * *

S7.4.2 *Procedure.* Make hardness measurements at 23°±2° C. (73.4°±4°F.). Equilibrate the tester and anvils at this temperature prior to use. Center brake cups lip side down on an anvil of appropriate hardness. Following the manufacturer's operating instructions for the hardness tester, make one measurement at each of four points 6 mm from the center of the cup and spaced 90° apart. Average the four values, and round off to the nearest IRHD.

* * * * *

S7.5.1 *Apparatus.*

* * * * *

(b) *Centrifuge.* A centrifuge capable of whirling two or more filled centrifuge tubes at a speed which can be controlled to give a relative centrifugal force (r.c.f.) between 600 and 700 at the tip of the tubes. The revolving head, trunnion rings, and trunnion cups, including the rubber cushion, shall withstand the maximum centrifugal force capable of being delivered by the power source. The trunnion cups and cushions shall firmly support the tubes when the centrifuge is in motion. Calculate the speed of the rotating head using this equation:

$$r.p.m. = 265[\sqrt{25.4 \times r.c.f./d}]$$

Where:

r.c.f. = Relative centrifugal force, and

d = Diameter of swing, in millimeters, measured between tips of opposing tubes when in rotating position.

Table VI shows the relationship between diameter, swing, relative centrifugal force (r.c.f.), and revolutions per minute.

TABLE VI.—ROTATION SPEEDS FOR CENTRIFUGES OF VARIOUS DIAMETERS

Diameter of swing in millimeters [a]	r.p.m. at 600 r.c.f	r.p.m. at 700 r.c.f.
483	1490	1610
508	1450	1570
533	1420	1530
559	1390	1500

[a] Measured in millimeters between tips of opposite tubes when in rotating position.

* * * * *

8. Section 571.123 would be amended by revising S5.2.3 to read as follows:

§ 571.123 Standard No. 123, Motorcycle controls and displays.

* * * * *

S5.2.3 *Control and display identification.* If an item of equipment in Table 3, Column 1, is provided, the item and its operational function shall be identified by:

(a) A symbol substantially in the form shown in Column 3; or

(b) Wording shown in both Column 2 and Column 4; or

(c) A symbol substantially in the form shown in Column 3 and wording shown in both Column 2 and Column 4.

(d) The abbreviations ''M.P.H.'', ''km/h'', ''r/min'', ''Hi'', ''Lo'', ''L'', ''R'', and ''Res'' appearing in Column 2 and Column 4 may be spelled in full. Symbols and words may be provided for equipment items where none are shown in Column 2, Column 3, and Column 4. Any identification provided shall be placed on or adjacent to the control or display position, and shall appear upright to the operator.

* * * * *

9. In § 571.123, Table 3 ''Motorcycle Control and Display Identification Requirements'' that follows S5.2.5 and Tables 1 and 2 would be revised to read as follows:

BILLING CODE 4910–59–P

Table 3
Motorcycle Control and Display Identification Requirements

No.	Column 1	Column 2	Column 3	Column 4
	EQUIPMENT	*Control and Display Identification Word*	*Control and Display Identification Symbol*	*Identification at Appropriate Position of Control and Display*
1	IGNITION	Ignition	—	Off
2	SUPPLEMENTAL ENGINE STOP (OFF, RUN)	Engine Stop		Off, Run
3	MANUAL CHOKE OR MIXTURE ENRICHMENT	Choke or Enricher		—
4	ELECTRIC STARTER	—		Start [1]
5	HEADLAMP UPPER-LOWER BEAM CONTROL	Lights	[2]	Hi, Lo
6	HORN	Horn		
7	TURN SIGNAL	Turn	[2] [3]	L, R
8	SPEEDOMETER	km/h [5] mph	—	km/h [5] mph [4]
9	NEUTRAL INDICATOR	Neutral	N	Yes
10	UPPER BEAM INDICATOR	High Beam	[2]	—
11	TACHOMETER	R.P.M. or r/min.	—	—
12	FUEL TANK SHUTOFF VALVE (OFF, ON, RES.)	Fuel	[2] [2]	Off, On, Res.

[1] Required only if electric starter is separate from ignition switch.

[2] Framed areas may be filed..

[3] The pair of arrows is a single symbol. When the indicators for left and right turn operate independently, however, the two arrows will be considered separate symbols and may be spaced acdordingly.

[4] M.P.H. increase in a clockwise direction. Major graduations and numerals appear at 10 mph intervals, minor graduations at the 5 mph intervals. (37 F.R. 17474–August 29, 1972. Effective: 9/1/74.

[5] If the speedometer is graduated in miles per hour (MPH) and in kilometers per hour (km/h), the identifying words or abbreviation shall be MPH and km/h in any combination of upper or lower case letters.

BILLING CODE 4910–59–P

10. Section 571.202 is amended by revising S2; revising S4.2; revising S4.3; revising in S5.1, paragraph (c), and revising S5.2 to read as follows:

§ 571.202 Standard No. 202, Head restraints.

* * * * *

S2. *Application.* This standard applies to passenger cars, and to multipurpose passenger vehicles, trucks and buses with a GVWR of 4,536 kg or less.

* * * * *

S4.2 Each truck, multipurpose passenger vehicle and bus with a GVWR of 4,536 kg or less, shall comply with S4.3.

S4.3 *Performance levels.* Except for school buses, a head restraint that conforms to either (a) or (b) shall be provided at each outboard front designated seating position. For school buses, a head restraint that conforms to either (a) or (b) shall be provided for the driver's seating position.

(a) It shall, when tested in accordance with S5.1, during a forward acceleration of at least 78 m/s² on the seat supporting structure, limit rearward angular displacement of the head reference line to 45° from the torso reference line; or

(b) It shall, when adjusted to its fully extended design position, conform to each of the following—

(1) When measured parallel to torso line, the top of the head restraint shall not be less than 700 mm above the seating reference point;

(2) When measured either 64 mm below the top of the head restraint or 635 mm above the seating reference point, the lateral width of the head restraint shall be not less than—

(i) 254 mm for use with bench-type seats; and

(ii) 171 mm for use with individual seats:

(3) When tested in accordance with S5.2, the rearmost portion of the head form shall not be displaced to more than 102 mm perpendicularly rearward of the displaced extended torso reference line during the application of the load specified in S5.2(c); and

(4) When tested in accordance with S5.2, the head restraint shall withstand an increasing load until one of the following occurs:

(i) Failure of the seat or seat back; or

(ii) Application of a load of 890 N.

* * * * *

(c) During forward acceleration applied to the structure supporting the seat as described in this paragraph, measure the maximum rearward angular displacement between the dummy torso reference line and head reference line. When graphically depicted, the magnitude of the acceleration curve shall not be less than that of a half-sine wave having the amplitude of 78 m/s² and a duration of 80 milliseconds and not more than that of a half-sine wave curve having an amplitude of 94 m/s² and a duration of 96 milliseconds.

S5.2 Compliance with S4.3(b) shall be demonstrated in accordance with the following with the head restraint in its fully extended design position:

(a) Place a test device, having the back plan dimensions and torso line (centerline of the head room probe in full back position), of the three dimensional SAE J826 manikin, at the manufacturer's recommended design seated position.

(b) Establish the displaced torso reference line by applying a rearward moment of 373 Nm moment about the seating reference point to the seat back through the test device back pan located in (a).

(c) After removing the back pan, using a 165 mm diameter spherical head form or cylindrical head form having a 165 mm diameter in plan view and a 152 mm height in profile view, apply, perpendicular to the displaced torso reference line, a rearward initial load 64 mm below the top of the head restraint that will produce a 373 Nm moment about the seating reference point.

(d) Gradually increase this initial load to 890 N or until the seat or seat back fails, whichever occurs first.

11. Section 571.203 is amended by revising S2; revising S4; and revising S5.1 to read as follows:

§ 571.203 Standard No. 203, Impact protection for the driver from the steering control system.

* * * * *

S2. *Application.* This standard applies to passenger cars and to multipurpose passenger vehicles, trucks and buses with a gross vehicle weight rating of 4,536 kg or less. However, it does not apply to vehicles that conform to the frontal barrier crash requirements (S5.1) of Standard No. 208 (49 CFR 571.208) by means of other than seat belt assemblies. It also does not apply to walk-in vans.

* * * * *

S4. *Requirements.* Each passenger car and each multipurpose passenger vehicle, truck and bus with a gross vehicle weight rating of 4,536 kg or less manufactured on or after September 1, 1981 shall meet the requirements of S5.1 and S5.2.

S5. *Impact protection requirements.*

S5.1 Except as provided in this paragraph, the steering control system of any vehicle to which this standard applies shall be impacted in accordance with S5.1(a). However, the steering control system of any such vehicle manufactured on or before August 31, 1996, may be impacted in accordance with S5.1(b).

(a) When the steering control system is impacted by a body block in accordance with SAE Recommended Practice J944 JUN80 *Steering Control System—Passenger Car—Laboratory Test Procedure,* at a relative velocity of 24.1 km/h, the impact force developed on the chest of the body block transmitted to the steering control system shall not exceed 11,110 N, except for intervals whose cumulative duration is not more than 3 milliseconds.

(b) When the steering control system is impacted in accordance with Society of Automotive Engineers Recommended Practice J944, ''Steering Wheel Assembly Laboratory Test Procedure,'' December 1965, or an approved equivalent, at a relative velocity of 24 km/h, the impact force developed on the chest of the body block transmitted to the steering control system shall not exceed 11,120 N, except for intervals whose cumulative duration is not more than 3 milliseconds.

* * * * *

12. Section 571.204 is amended by revising S4.2 to read as follows:

§ 571.204 Standard No. 204, Steering control rearward displacement.

* * * * *

S4.2 *Vehicles manufactured on or after September 1, 1991.* When a passenger car or a truck, bus or multipurpose passenger vehicle with a gross vehicle weight rating of 4,536 kg or less and an unloaded vehicle weight of 2,495 kg or less is tested under the conditions of S5 in a 48.3 km/h perpendicular impact into a fixed collision barrier, the upper end of the steering column and shaft in the vehicle shall not be displaced more than 127 mm in a horizontal rearward direction parallel to the longitudinal axis of the vehicle. The amount of displacement shall be measured relative to an undisturbed point on the vehicle and shall represent the maximum dynamic movement of the upper end of the steering column and shaft during the crash test.

* * * * *

13. Section 571.207 is amended by revising S5.1.2 to read as follows:

§ 571.207 Standard No. 207, Seating systems.

* * * * *

S5.1.2 If the seat back and the seat bench are attached to the vehicle by different attachments, attach to each

component a fixture capable of transmitting a force to that component. Apply forces, in newtons, equal to 20 times the mass of the seat back in kilograms multiplied by 9.8 m/s² horizontally through the center of gravity of the seat back, as shown in Figure 2 and apply forces, in newtons, equal to 20 times the mass of the seat bench in kilograms multiplied by 9.8 m/s² horizontally through the center of gravity of the seat bench, as shown in Figure 3.

* * * * *

14. Section 571.209 is amended by revising in S4.1, paragraphs (f) and (g)(3); revising in S4.2, paragraphs (a), (b) and (c); revising in S4.3, paragraphs (c), (d), (e), (g), (h), (i), and (j); revising S4.4; revising in S5.1, paragraphs (a), (b), (c), (d), (e), and (f); revising in S5.2, paragraph (a) except for the NOTE, and paragraphs (c), (d), (e), (f), (g), (h), (i), (j), and (k); and revising in S5.3, paragraphs (a), (b), and (c) to read as follows:

§ 571.209 Standard No. 209, Seat belt assemblies.

* * * * *

S4.1 (a) * * *

(f) *Attachment hardware.* A seat belt assembly shall include all hardware necessary for installation in a motor vehicle in accordance with Society of Automotive Engineers Recommended Practice J800c, ''Motor Vehicle Seat Belt Installation,'' November 1973. However, seat belt assemblies designed for installation in motor vehicles equipped with seat belt assembly anchorages that do not require anchorage nuts, plates, or washers, need not have such hardware, but shall have 7⁄16–20 UNF–2A or ½–13UNC–2A attachment bolts or equivalent metric hardware. The hardware shall be designed to prevent attachment bolts and other parts from becoming disengaged from the vehicle while in service. Reinforcing plates or washers furnished for universal floor, installations shall be of steel, free from burrs and sharp edges on the peripheral edges adjacent to the vehicle, at least 1.5 mm in thickness and at least 2580 mm² in projected area. The distance between any edge of the plate and the edge of the bolt hole shall be at least 15 mm. Any corner shall be rounded to a radius of not less than 6 mm or cut so that no corner angle is less than 135° and no side is less than 6 mm in length.

(g) *Adjustment.* * * *

(3) The adult occupants referred to in S4.1(g)(1) shall have the following measurements:

	5th percentile adult female	95th percentile adult male
Weight	46.3 kg	97.5 kg.
Erect sitting height.	785 mm	965 mm.
Hip breadth (sitting).	325 mm	419 mm.
Hip circumference (sitting).	925 mm	1199 mm.
Waist circumference (sitting).	599 mm	1080 mm.
Chest depth	190 mm	267 mm.
Chest circumference:		
Nipple	775 mm	1130 mm.
Upper	757 mm	1130 mm.
Lower	676 mm	1130 mm.

* * * * *

S4.2 *Requirements for webbing.*

(a) *Width.* The width of the webbing in a seat belt assembly shall be not less than 46 mm, except for portions that do not touch a 95th percentile adult male with the seat in any adjustment position and the seat back in the manufacturer's nominal design riding position when measured under the conditions prescribed in S5.1(a).

(b) *Breaking strength.* The webbing in a seat belt assembly shall have not less than the following breaking strength when tested by the procedures specified in S5.1(b): Type 1 seat belt assembly—26.7 kN; Type 2 seat belt assembly—22.2 kN for webbing pelvic restraint and 17.8 kN for webbing in upper torso restraint.

(c) *Elongation.* Except as provided in S4.5, the webbing in a seat belt assembly shall not extend to more than the following elongation when subjected to the specified forces in accordance with the procedure specified in S5.1(c): Type 1 seat belt assembly—20 percent at 11,120 N; Type 2 seat belt assembly 30 percent at 11,120 N for webbing in pelvic restraint and 40 percent at 11,120 N for webbing in upper torso restraint.

* * * * *

(c) *Attachment hardware.* (1) Eye bolts, shoulder bolts, or other bolt used to secure the pelvic restraint of seat belt assembly to a motor vehicle shall withstand a force of 40,034 N when tested by the procedure specified in S5.2(c)(1), except that attachment bolts of a seat belt assembly designed for installation in specific models of motor vehicles in which the ends of two or more seat belt assemblies cannot be attached to the vehicle by a single bolt shall have breaking strength of not less than 22,241 N.

(2) Other attachment hardware designed to receive the ends of two seat belt assemblies shall withstand a tensile force of at least 26,689 N without fracture of a section when tested by the procedure specified in S5.2(c)(2).

(3) A seat belt assembly having single attachment hooks of the quick-disconnect type for connecting webbing to an eye bolt shall be provided with a retaining latch or keeper which shall not move more than 2 mm in either the vertical or horizontal direction when tested by the procedure specified in S5.2(c)(3).

(d) *Buckle release.* (1) The buckle of a Type 1 or Type 2 seat belt assembly shall release when a force of not more than 133 N is applied.

(2) A buckle designed for pushbutton application of buckle release force shall have a minimum area of 452 mm² with a minimum linear dimension of 10 mm for applying the release force, or a buckle designed for lever application of buckle release force shall permit the insertion of a cylinder 10 mm in diameter and 38 mm in length to at least the midpoint of the cylinder along the cylinder's entire length in the actuation portion of the buckle release. A buckle having other design for release shall have adequate access for two or more fingers to actuate release.

(3) The buckle of a Type 1 or Type 2 seat belt assembly shall not release under a compressive force of 1779 N applied as prescribed in paragraph S5.2(d)(3). The buckle shall be operable and shall meet the applicable requirement of paragraph S4.4 after the compressive force has been removed.

(e) *Adjustment force.* The force required to decrease the size of a seat belt assembly shall not exceed 49 N when measured by the procedure specified in S5.2(e).

* * * * *

(g) *Buckle latch.* The buckle latch of a seat belt assembly when tested by the procedure specified in S5.2(g) shall not fail, nor gall or wear to an extent that normal latching and unlatching is impaired, and a metal-to-metal buckle shall separate when in any position of partial engagement by a force of not more than 22 N.

(h) *Nonlocking retractor.* The webbing of a seat belt assembly shall extend from a nonlocking retractor within 6 mm of maximum length when a tension is applied as prescribed in S5.2(h). A nonlocking retractor on upper torso restraint shall be attached to the nonadjustable end of the assembly, the reel of the retractor shall be easily visible to an occupant while wearing the assembly, and the maximum retraction force shall not exceed 5 N in any strap or webbing that contacts the shoulder when measured by the procedure

specified in S5.2(h), unless the retractor is attached to the free end of webbing which is not subjected to any tension during restraint of an occupant by the assembly.

(i) *Automatic-locking retractor.* The webbing of a seat belt assembly equipped with an automatic locking retractor, when tested by the procedure specified in S5.2(i), shall not move more than 25 mm between locking positions of the retractor, and shall be retracted with a force under zero acceleration of not less than 3 N when attached to pelvic restraint, and not less that 2 N nor more than 5 N in any strap or webbing that contacts the shoulders of an occupant when the retractor is attached to upper torso restraint. An automatic locking retractor attached to upper torso restraint shall not increase the restraint on the occupant of the seat belt assembly during use in a vehicle traveling over rough roads as prescribed in S5.2(i).

(j) *Emergency-locking retractor.* An emergency-locking retractor of a Type 1 or Type 2 seat belt assembly, when tested in accordance with the procedures specified in paragraph S5.2(j)—

(1) Shall lock before the webbing extends 25 mm when the retractor is subjected to an acceleration of 7 m/s^2;

(2) Shall not lock, if the retractor is sensitive to webbing withdrawal, before the webbing extends 51 mm when the retractor is subjected to an acceleration of 3 m/s^2 or less;

(3) Shall not lock, if the retractor is sensitive to vehicle acceleration, when the retractor is rotated in any direction to any angle of 15° or less from its orientation in the vehicle;

(4) Shall exert a retractive force of at least 3 N under zero acceleration when attached only to the pelvic restraint;

(5) Shall exert a retractive force of not less than 1 N and not more than 5 N under zero acceleration when attached only to an upper torso restraint;

(6) Shall exert a retractive force of not less than 1 N and not more than 7 N under zero acceleration when attached to a strap or webbing that restrains both the upper torso and the pelvis.

* * * * *

S4.4 *Requirements for assembly performance.*

(a) *Type I seat belt assembly.* Except as provided in S4.5, the complete seat belt assembly including webbing, straps, buckles, adjustment and attachment hardware, and retractors shall comply with the following requirements when tested by the procedures specified in S5.3(a):

(1) The assembly loop shall withstand a force of not less than 22,241 N; that is, each structural component of the assembly shall withstand a force of not less than 1,120 N.

(2) The assembly loop shall extend not more than 7 inches or 178 mm when subjected to a force of 22,241 N; that is, the length of the assembly between anchorages shall not increase more than 356 mm.

(3) Any webbing cut by the hardware during test shall have a breaking strength at the cut of not less than 18,683 N.

(4) Complete fracture through any solid section of metal attachment hardware shall not occur during test.

(b) *Type 2 seat belt assembly.* Except as provided in S4.5, the components of a Type 2 seat belt assembly including webbing, straps, buckles, adjustment and attachment hardware, and retractors shall comply with the following requirements when tested by the procedure specified in S5.3(b):

(1) The structural components in the pelvic restraint shall withstand a force of not less than 11,120 N.

(2) The structural components in the upper torso restraint shall withstand a force of not less than 6,672 N.

(3) The structural components in the assembly that are common to pelvic and upper torso restraints shall withstand a force of not less than 13,345 N.

(4) The length of the pelvic restraint between anchorages shall not increase more than 508 mm when subjected to a force of 11,120 N.

(5) The length of the upper torso restraint between anchorages shall not increase more than 508 mm when subjected to a force of 6,672 N.

(6) Any webbing cut by the hardware during test shall have a breaking strength of not less than 15,569 N at a cut in webbing of the pelvic restraint, or not less than 12,455 N at a cut in webbing of the upper torso restraint.

(7) Complete fracture through any solid section of metal attachment hardware shall not occur during test.

* * * * *

S5. *Demonstration procedures.*

S5.1 *Webbing*—(a) *Width.* The width of webbing from three seat belt assemblies shall be measured after conditioning for at least 24 hours in an atmosphere having relative humidity between 48 and 67 percent and a temperature of 23° ±2°C. The tension during measurement of width shall be not more than 22 N on webbing from a Type 1 seat belt assembly, and 9786 N ± 450 N on webbing from a Type 2 seat belt assembly. The width of webbing from a Type 2 seat belt assembly may be measured during the breaking strength test described in paragraph (b) of this section.

(b) *Breaking strength.* Webbing from three seat belt assemblies shall be conditioned in accordance with paragraph (a) of this section and tested for breaking strength in a testing machine of capacity verified to have an error of not more than one percent in the range of the breaking strength of the webbing in accordance with American Society for Testing and Materials E4–79 ''Standard Methods of Load Verification of Testing Machines.'' The machine shall be equipped with split drum grips illustrated in Figure 1, having a diameter between 51 and 102 mm. The rate of grip separation shall be between 51 and 102 mm per minute. The distance between the centers of the grips at the start of the test shall be between 102 and 254 mm. After placing the specimen in the grips, the webbing shall be stretched continuously at a uniform rate to failure. Each value shall be not less than the applicable breaking strength requirement in S4.2(b), but the median value shall be used for determining the retention of breaking strength in paragraphs (d), (e) and (f) of this section.

(c) *Elongation.* Elongation shall be measured during the breaking strength test described in paragraph (b) of this section by the following procedure: A preload between 196 N and 245 N shall be placed on the webbing mounted in the grips of the testing machine and the needle points of an extensometer, in which the points remain parallel during test, are inserted in the center of the specimen. Initially the points shall be set at a known distance apart between 102 and 203 mm. When the force on the webbing reaches the value specified in S4.2(c), the increase in separation of the points of the extensometer shall be measured and the percent elongation shall be calculated to the nearest 0.5 percent. Each value shall be not more than the appropriate elongation requirement in S4.2(c).

(d) *Resistance to abrasion.* The webbing from three seat belt assemblies shall be tested for resistance to abrasion by rubbing over the hexagon bar prescribed in Figure 2 in the following manner: The webbing shall be mounted in the apparatus shown schematically in Figure 2. One end of the webbing (A) shall be attached to a mass (B) of 2.35 kg ± .05 kg, except that a mass of 1.5 kg ± .05 kg shall be used for webbing in pelvic and upper torso restraints of a belt assembly used in a child restraint system. The webbing shall be passed over the two new abrading edges of the hexagon bar (C) and the other end attached to an oscillating drum (D) which has a stroke of 330 mm. Suitable guides shall be used to prevent

movement of the webbing along the axis of hexagonal bar C. Drum D shall be oscillated for 5,000 strokes or 2,500 cycles at a rate of 60 ± 2 strokes per minute or 30 ± 1 cycles per minute. The abraded webbing shall be conditioned as prescribed in paragraph (a) of this section and tested for breaking strength by the procedure described in paragraph (b) of this section. The median values for the breaking strengths determined on abraded and unabraded specimens shall be used to calculate the percentage of breaking strength retained.

(e) *Resistance to light.* Webbing at least 508 mm in length from three seat belt assemblies shall be suspended vertically on the inside of the specimen track in a Type E carbon-arc light exposure apparatus described in Standard Practice for Generating Light-Exposure Apparatus (Carbon-Arc Type) With and Without Water for Exposure of Nonmetallic Materials, ASTM Designation: G23 81, published by the American Society for Testing and Materials, except that the filter used for 100 percent polyester yarns shall be chemically strengthened soda-lime glass with a transmittance of less than 5 percent for wave lengths equal to or less than 305 nanometers and 90 percent or greater transmittance for wave lengths of 375 to 800 nanometers. The apparatus shall be operated without water spray at an air temperature of 60° ± 2° Celsius (°C) measured at a point 25 ± 5 mm outside the specimen rack and midway in height. The temperature sensing element shall be shielded from radiation. The specimens shall be exposed to light from the carbon-arc for 100 hours and then conditioned as prescribed in paragraph (a) of this section. The colorfastness of the exposed and conditioned specimens shall be determined on the Geometric Gray Scale issued by the American Association of Textile Chemists and Colorists. The breaking strength of the specimens shall be determined by the procedure prescribed in paragraph (b) of this section. The median values for the breaking strengths determined on exposed and unexposed specimens shall be used to calculate the percentage of breaking strength retained.

(f) *Resistance to micro-organisms.* Webbing at least 508 millimeters (mm) in length from three seat belt assemblies shall first be preconditioned in accordance with Appendix A(1) and (2) of American Association of Textile Chemists and Colorists Test Method 381, ''Fungicides Evaluation on Textiles; Mildew and Rot Resistance of Textiles,'' and then subjected to Test I, ''Soil Burial Test'' of that test method. After soil-burial for a period of 2 weeks, the specimen shall be washed in water, dried and conditioned as prescribed in paragraph (a) of this section. The breaking strengths of the specimens shall be determined by the procedure prescribed in paragraph (b) of this section. The median values for the breaking strengths determined on exposed and unexposed specimens shall be used to calculate the percentage of breaking strength retained.

Note: This test shall not be required on webbing made from material which is inherently resistant to micro-organisms.

* * * * *

S5.2 *Hardware.*

(a) *Corrosion resistance.* Three seat belt assemblies shall be tested in accordance with American Society for Testing and Materials B11773, ''Standard Method of Salt Spray (Fog) Testing.'' Any surface coating or material not intended for permanent retention on the metal parts during service life shall be removed prior to preparation of the test specimens for testing. The period of test shall be 50 hours for all attachment hardware at or near the floor, consisting of two periods of 24 hours exposure to salt spray followed by 1 hour drying and 25 hours for all other hardware, consisting of one period of 24 hours exposure to salt spray followed by 1 hour drying. In the salt spray test chamber, the parts from the three assemblies shall be oriented differently, selecting those orientations most likely to develop corrosion on the larger areas. At the end of test, the seat belt assembly shall be washed thoroughly with water to remove the salt. After drying for at least 24 hours under standard laboratory conditions specified in S5.1(a) attachment hardware shall be examined for ferrous corrosion on significant surfaces, that is, all surfaces that can be contacted by a sphere 19 mm in diameter, and other hardware shall be examined for ferrous and nonferrous corrosion which may be transferred, either directly or by means of the webbing, to a person or his clothing during use of a seat belt assembly incorporating the hardware.

* * * * *

(c) *Attachment hardware.* (1) Attachment bolts used to secure the pelvic restraint of a seat belt assembly to a motor vehicle shall be tested in a manner similar to that shown in Figure 3. The load shall be applied at an angle of 45° to the axis of the bolt through attachment hardware from the seat belt assembly, or through a special fixture which simulates the loading applied by the attachment hardware. The attachment hardware or simulated fixture shall be fastened by the bolt to the anchorage shown in Figure 3, which has a standard 7⁄16–20UNF–2B or ½-UNF–2B or metric equivalent threaded hole in a hardened steel plate at least 10 mm in thickness. The bolt shall be installed with two full threads exposed from the fully seated position. The appropriate force required by S4.3(c) shall be applied. A bolt from each of three seat belt assemblies shall be tested.

(2) Attachment hardware, other than bolts, designed to receive the ends of two seat belt assemblies shall be subjected to a tensile force of 26,689 N in a manner simulating use. The hardware shall be examined for fracture after the force is released. Attachment hardware from three seat belt assemblies shall be tested.

(3) Single attachment hook for connecting webbing to any eye bolt shall be tested in the following manner: The hook shall be held rigidly so that the retainer latch or keeper, with cotter pin or other locking device in place, is in a horizontal position as shown in Figure 4. A force of 667 N ± 9 N shall be applied vertically as near as possible to the free end of the retainer latch, and the movement of the latch by this force at the point of application shall be measured. The vertical force shall be released, and a force of 667 N ± 9 N shall be applied horizontally as near as possible to the free end of the retainer latch. The movement of the latch by this force at the point of load application shall be measured. Alternatively, the hook may be held in other positions, provided the forces are applied and the movements of the latch are measured at the points indicated in Figure 4. A single attachment hook from each of three seat belt assemblies shall be tested.

(d) *Buckle release.* (1) Three seat belt assemblies shall be tested to determine compliance with the maximum buckle release force requirements, following the assembly test in S5.3. After subjection to the force applicable for the assembly being tested, the force shall be reduced and maintained at 667 N on the assembly loop of a Type 1 seat belt assembly, 334 N the components of a Type 2 seat belt assembly. The buckle release force shall be measured by applying a force on the buckle in a manner and direction typical of those which would be employed by a seat belt occupant. For push button-release buckles, the force shall be applied at least 3 mm from the edge of the push button access opening of the buckle in a direction that produces maximum releasing effect. For lever-release buckles, the force shall be applied on the centerline of the buckle lever or

finger tab in a direction that produces maximum releasing effect.

(2) The area for application of release force on pushbutton actuated buckle shall be measured to the nearest 30 mm^2. The cylinder specified in S4.3(d) shall be inserted in the actuation portion of a lever released buckle for determination of compliance with the requirement. A buckle with other release actuation shall be examined for access of release by fingers.

(3) The buckle of a Type 1 or Type 2 seat belt assembly shall be subjected to a compressive force of 1779 N applied anywhere on a test line that is coincident with the center line of the belt extended through the buckle or on any line that extends over the center of the release mechanism and intersects the extended centerline of the belt at an angle of 60°. The load shall be applied by using a curved cylindrical bar having a cross section diameter of 19 mm and a radius of curvature of 152 mm, placed with its longitudinal center line along the test line and its center directly above the point or the buckle to which the load will be applied. The buckle shall be latched, and a tensile force of 334 N shall be applied to the connected webbing during the application of the compressive force. Buckles from three seat belt assemblies shall be tested to determine compliance with paragraph S4.3(d)(3).

(e) *Adjustment Force.* Three seat belt assemblies shall be tested for adjustment force on the webbing at the buckle, or other manual adjusting device normally used to adjust the size of the assembly. With no load on the anchor end, the webbing shall be drawn through the adjusting device at a rate of 508 mm ±5 mm per minute and the maximum force shall be measured to the nearest 1 N after the first 25 mm of webbing movement. The webbing shall be precycled 10 times prior to measurement.

(f) *Tilt-lock adjustment.* This test shall be made on buckles or other manual adjusting devices having tilt-lock adjustment normally used to adjust the size of the assembly. Three buckles or devices shall be tested. The base of the adjustment mechanism and the anchor end of the webbing shall be oriented in planes normal to each other. The webbing shall be drawn through the adjustment mechanism in a direction to increase belt length at a rate of 508 mm ±50 mm per minute while the plane of the base is slowly rotated in a direction to lock the webbing. Rotation shall be stopped when the webbing locks, but the pull on the webbing shall be continued until there is a resistance of at least 89 N. The locking angle between the anchor end of the webbing and the base of the adjustment mechanism shall be measured to the nearest degree. The webbing shall be precycled 10 times prior to measurement.

(g) *Buckle latch.* The buckles from three seat belt assemblies shall be opened fully and closed at least 10 times. Then the buckles shall be clamped or firmly held against a flat surface so as to permit normal movement of buckle part, but with the metal mating plate (metal-to-metal buckles) or of webbing end (metal-to-webbing buckles) withdrawn from the buckle. The release mechanism shall be moved 200 times through the maximum possible travel against its stop with a force of 133 N ±13 N at a rate not to exceed 30 cycles per minute. The buckle shall be examined to determine compliance with the performance requirements of S4.3(g). A metal-to-metal buckle shall be examined to determine whether partial engagement is possible by means of any technique representative of actual use. If partial engagement is possible, the maximum force of separation when in such partial engagement shall be determined.

(h) *Nonlocking retractor.* After the retractor is cycled 10 times by full extension and retraction of the webbing, the retractor and webbing shall be suspended vertically and a force of 18 N shall be applied to extend the webbing from the retractor. The force shall be reduced to 13 N when attached to a pelvic restraint, or to 5 N per strap or webbing that contacts the shoulder of an occupant when retractor is attached to an upper torso restraint. The residual extension of the webbing shall be measured by manual rotation of the retractor drum or by disengaging the retraction mechanism. Measurements shall be made on three retractors. The location of the retractor attached to upper torso restraint shall be examined for visibility of reel during use of seat belt assembly in a vehicle.

Note: This test shall not be required on a nonlocking retractor attached to the free end of webbing which is not subjected to any tension during restraint of an occupant by the assembly.

(i) *Automatic-locking retractor.* Three retractors shall be tested in a manner to permit the retraction force to be determined exclusive of the gravitational forces on hardware or webbing being retracted. The webbing shall be fully extended from the retractor. While the webbing is being retracted, the average force or retraction within plus or minus 51 mm of 75 percent extension (25 percent retraction) shall be determined and the webbing movement between adjacent locking segments shall be measured in the same region of extension. A seat belt assembly with automatic locking retractor in upper torso restraint shall be tested in a vehicle in a manner prescribed by the installation and usage instructions. The retraction force on the occupant of the seat belt assembly shall be determined before and after traveling for 10 minutes at a speed of 24 kilometers per hour (km/h) or more over a rough road (e.g., Belgian block road) where the occupant is subjected to displacement with respect to the vehicle in both horizontal and vertical directions. Measurements shall be made with the vehicle stopped and the occupant in the normal seated position.

(j) *Emergency-locking retractor.* A retractor shall be tested in a manner that permits the retraction force to be determined exclusive of the gravitational forces on hardware or webbing being retracted. The webbing shall be fully extended from the retractor, passing over or through any hardware or other material specified in the installation instructions. While the webbing is being retracted, the lowest force of retraction within plus or minus 51 mm of 75 percent extension shall be determined. A retractor that is sensitive to webbing withdrawal shall be subjected to an acceleration of $3m/s^2$ within a period of 50 milliseconds (ms) while the webbing is at 75 percent extension, to determine compliance with S4.3(j)(2). The retractor shall be subjected to an acceleration of $7\ m/s^2$ within a period of 50 milliseconds (ms), while the webbing is at 75 percent extension, and the webbing movement before locking shall be measured under the following conditions: For a retractor sensitive to webbing withdrawal, the retractor shall be accelerated in the direction of webbing retraction while the retractor drum's central axis is oriented horizontally and at angles of 45°, 90°, 135°, and 180° to the horizontal plane. For a retractor sensitive to vehicle acceleration, the retractor shall be:

(1) Accelerated in the horizontal plane in two directions normal to each other, while the retractor drum's central axis is oriented at the angle at which it is installed in the vehicle; and,

(2) Accelerated in three directions normal to each other while the retractor drum's central axis is oriented at angles of 45°, 90°, 135°, and 180° from the angle at which it is installed in the vehicle, unless the retractor locks by gravitational force when tilted in any direction to any angle greater than 45° from the angle at which it is installed in the vehicle.

(k) *Performance of retractor.* After completion of the corrosion-resistance test described in paragraph (a) of this section, the webbing shall be fully extended and allowed to dry for at least 24 hours under standard laboratory conditions specified in S5.1(a). The retractor shall be examined for ferrous and nonferrous corrosion which may be transferred, either directly or by means of the webbing, to a person or his clothing during use of a seat belt assembly incorporating the retractor, and for ferrous corrosion on significant surfaces if the retractor is part of the attachment hardware. The webbing shall be withdrawn manually and allowed to retract for 25 cycles. The retractor shall be mounted in an apparatus capable of extending the webbing fully, applying a force of 89 N at full extension, and allowing the webbing to retract freely and completely. The webbing shall be withdrawn from the retractor and allowed to retract repeatedly in this apparatus until 2,500 cycles are completed. The retractor and webbing shall then be subjected to the temperature resistance test prescribed in paragraph (b) of this section. The retractor shall be subjected to 2,500 additional cycles of webbing withdrawal and retraction. Then, the retractor and webbing shall be subjected to dust in a chamber similar to one illustrated in Figure 8 containing about 0.9 kg of coarse grade dust conforming to the specification given in Society of Automotive Engineering Recommended Practice J726, ''Air Cleaner Test Code'' Sept. 1979. The dust shall be agitated every 20 minutes for 5 seconds by compressed air, free of oil and moisture, at a gage pressure of 550 ±55 kPa entering through an orifice 1.5 ± 0.1 mm in diameter. The webbing shall be extended to the top of the chamber and kept extended at all times except that the webbing shall be subjected to 10 cycles of complete retraction and extension within 1 to 2 minutes after each agitation of the dust. At the end of 5 hours, the assembly shall be removed from the chamber. The webbing shall be fully withdrawn from the retractor manually and allowed to retract completely for 25 cycles. An automatic-locking retractor or a nonlocking retractor attached to pelvic restraint shall be subjected to 5,000 additional cycles of webbing withdrawal and retraction. An emergency locking retractor or a nonlocking retractor attached to upper torso restraint shall be subjected to 45,000 additional cycles of webbing withdrawal and retraction between 50 and 100 per cent extension. The locking mechanism of an emergency locking retractor shall be actuated at least 10,000 times within 50 to 100 percent extension of webbing during the 50,000 cycles. At the end of test, compliance of the retractors with applicable requirements in S4.3 (h), (i), and (j) shall be determined. Three retractors shall be tested for performance.

S5.3 *Assembly performance—(a) Type 1 seat belt assembly.* Three complete seat belt assemblies, including webbing, straps, buckles, adjustment and attachment hardware, and retractors, arranged in the form of a loop as shown in Figure 5, shall be tested in the following manner:

(1) The testing machine shall conform to the requirements specified in S5.1(b). A double-roller block shall be attached to one head of the testing machine. This block shall consist of two rollers 102 mm in diameter and sufficiently long so that no part of the seat belt assembly touches parts of the block other than the rollers during test. The rollers shall be mounted on antifriction bearings and spaced 305 mm between centers, and shall have sufficient capacity so that there is no brinelling, bending or other distortion of parts which may affect the results. An anchorage bar shall be fastened to the other head of the testing machine.

(2) The attachment hardware furnished with the seat belt assembly shall be attached to the anchorage bar. The anchor points shall be spaced so that the webbing is parallel in the two sides of the loop. The attaching bolts shall be parallel to, or at an angle of 45° or 90° to the webbing, whichever results in an angle nearest to 90° between webbing and attachment hardware except that eye bolts shall be vertical, and attaching bolts or nonthreaded anchorages of a seat belt assembly designed for use in specific models of motor vehicles shall be installed to produce the maximum angle in use indicated by the installation instructions, utilizing special fixtures if necessary to simulate installation in the motor vehicle. Rigid adapters between anchorage bar and attachment hardware shall be used if necessary to locate and orient the adjustment hardware. The adapters shall have a flat support face perpendicular to the threaded hole for the attaching bolt and adequate in area to provide full support for the base of the attachment hardware connected to the webbing. If necessary, a washer shall be used under a swivel plate or other attachment hardware to prevent the webbing from being damaged as the attaching bolt is tightened.

(3) The length of the assembly loop from attaching bolt to attaching bolt shall be adjusted to about 1295 mm, or as near thereto as possible. A force of 245 N shall be applied to the loop to remove any slack in webbing at hardware. The force shall be removed and the heads of the testing machine shall be adjusted for an assembly loop between 1220 and 1270 mm in length. The length of the assembly loop shall then be adjusted by applying a force between 89 and 98 N to the free end of the webbing at the buckle, or by the retraction force of an automatic-locking or emergency-locking retractor. A seat belt assembly that cannot be adjusted to this length shall be adjusted as closely as possible. An automatic-locking or emergency locking retractor when included in a seat belt assembly shall be locked at the start of the test with a tension on the webbing slightly in excess of the retractive force in order to keep the retractor locked. The buckle shall be in a location so that it does not touch the rollers during test, but to facilitate making the buckle release test in S5.2(d) the buckle should be between the rollers or near a roller in one leg.

(4) The heads of the testing machine shall be separated at a rate between 51 and 102 mm per minute until a force of 22,241 ± 222 N is applied to the assembly loop. The extension of the loop shall be determined from measurements of head separation before and after the force is applied. The force shall be decreased to 667 ± 45 N and the buckle release force measured as prescribed in S5.2(d).

(5) After the buckle is released, the webbing shall be examined for cutting by the hardware. If the yarns are partially or completely severed in a line for a distance of 10 percent or more of the webbing width, the cut webbing shall be tested for breaking strength as specified in S5.1(b) locating the cut in the free length between grips. If there is insufficient webbing on either side of the cut to make such a test for breaking strength, another seat belt assembly shall be used with the webbing repositioned in the hardware. A tensile force of 11,120 ± 111 N shall be applied to the components or a force of 22,241 ± 222 N shall be applied to the assembly loop. After the force is removed, the breaking strength of the cut webbing shall be determined as prescribed above.

(6) If a Type 1 seat belt assembly includes an automatic-locking retractor or an emergency-locking retractor, the webbing and retractor shall be subjected to a tensile force of 11,120 ± 111 N with the webbing fully extended from the retractor.

(7) If a seat belt assembly has a buckle in which the tongue is capable of inverted insertion, one of the three assemblies shall be tested with the tongue inverted.

(b) *Type 2 seat belt assembly.* Components of three seat belt assemblies shall be tested in the following manner:

(1) The pelvic restraint between anchorages shall be adjusted to a length between 1220 and 1270 mm, or as near this length as possible if the design of the pelvic restraint does not permit its adjustment to this length. An automatic-locking or emergency-locking retractor when included in a seat belt assembly shall be locked at the start of the test with a tension on the webbing slightly in excess of the retractive force in order to keep the retractor locked. The attachment hardware shall be oriented to the webbing as specified in paragraph (a)(2) of this section and illustrated in Figure 5. A tensile force 11,120 ± 111 N shall be applied on the components in any convenient manner and the extension between anchorages under this force shall be measured. The force shall be reduced to 334 ± 22 N and the buckle release force measured as prescribed in S5.2(d).

(2) The components of the upper torso restraint shall be subjected to a tensile force of 6,672 ± 67 N following the procedure prescribed above for testing pelvic restraint and the extension between anchorages under this force shall be measured. If the testing apparatus permits, the pelvic and upper torso restraints may be tested simultaneously. The force shall be reduced to 334 ± 22 N and the buckle release force measured as prescribed in S5.2(d).

(3) Any component of the seat belt assembly common to both pelvic and upper torso restraint shall be subjected to a tensile force of 13,344 ± 134 N.

(4) After the buckle is released in tests of pelvic and upper torso restraints, the webbing shall be examined for cutting by the hardware. If the yarns are partially or completely severed in a line for a distance of 10 percent or more of the webbing width, the cut webbing shall be tested for breaking strength as specified in S5.1(b) locating the cut in the free length between grips. If there is insufficient webbing on either side of the cut to make such a test for breaking strength, another seat belt assembly shall be used with the webbing repositioned in the hardware. The force applied shall be 11,120 ± 111 N for components of pelvic restraint, and 6,672 ± 67 N for components of upper torso restraint. After the force is removed, the breaking strength of the cut webbing shall be determined as prescribed above.

(5) If a Type 2 seat belt assembly includes an automatic-locking retractor or an emergency-locking retractor the webbing and retractor shall be subjected to a tensile force of 11,120 ± 111 N with the webbing fully extended from the retractor, or to a tensile force of 6,672 ± 67 N with the webbing fully extended from the retractor if the design of the assembly permits only upper torso restraint forces on the retractor.

(6) If a seat belt assembly has a buckle in which the tongue is capable of inverted insertion, one of the three assemblies shall be tested with the tongue inverted.

(c) *Resistance to buckle abrasion.* Seat belt assemblies shall be tested for resistance to abrasion by each buckle or manual adjusting device normally used to adjust the size of the assembly. The webbing of the assembly to be used in this test shall be exposed for 4 hours to an atmosphere having relative humidity of 65 per cent and temperature of 18° C. The webbing shall be pulled back and forth through the buckle or manual adjusting device as shown schematically in Figure 7. The anchor end of the webbing (A) shall be attached to a mass (B) of 1.4 kg. The webbing shall pass through the buckle (C), and the other end (D) shall be attached to a reciprocating device so that the webbing forms an angle of 8° with the hinge stop (E). The reciprocating device shall be operated for 2,500 cycles at a rate of 18 cycles per minute with a stroke length of 203 mm. The abraded webbing shall be tested for breaking strength by the procedure described in paragraph S5.1(b).

* * * * *

15. Section 571.210 is amended by revising in S4.2.1 the introductory paragraph; revising S4.2.2; revising S4.2.4; revising S4.3.1.1; revising S4.3.1.4; removing S4.3.1.5; revising S5.1; revising S5.2; and revising in S6, the introductory sentence, to read as follows:

§ 571.210 Standard No. 210, Seat belt assembly anchorages.

* * * * *

S4.2.1 Except as provided in S4.2.5, and except for side-facing seats, the anchorages, attachment hardware, and attachment bolts for any of the following seat belt assemblies shall withstand a 22,241 N force when tested in accordance with S5.1 of this standard:

* * * * *

S4.2.2 Except as provided in S4.2.5, the anchorages, attachment hardware, and attachment bolts for all Type 2 and automatic seat belt assemblies that are installed to comply with Standard No. 208 (49 CFR 571.208) shall withstand 13,345 N forces when tested in accordance with S5.2.

* * * * *

S4.2.4 Anchorages, attachment hardware, and attachment bolts shall be tested by simultaneously loading them in accordance with the applicable procedures set forth in S5 of this standard if the anchorages are either:

(a) For designated seating positions that are common to the same occupant seat and that face in the same direction, or

(b) For laterally adjacent designated seating positions that are not common to the same occupant seat, but that face in the same direction, if the vertical centerline of the bolt hole for at least one of the anchorages for one of those designated seating positions is within 305 mm of the vertical center line of the bolt hole for an anchorage for one of the adjacent seating positions.

* * * * *

S4.3.1.1 In an installation in which the seat belt does not bear upon the seat frame:

(a) If the seat is a nonadjustable seat, then a line from the seating reference point to the nearest contact point of the belt with the anchorage shall extend forward from the anchorage at an angle with the horizontal of not less than 30 degrees and not more than 75 degrees.

(b) If the seat is an adjustable seat, then a line from a point 64 mm forward of and 10 mm above the seating reference point to the nearest contact point of the belt with the anchorage shall extend forward from the anchorage at an angle with the horizontal of not less than 30 degrees and not more than 75 degrees.

* * * * *

S4.3.1.4 Anchorages for an individual seat belt assembly shall be located at least 165 mm apart laterally, measured between the vertical center line of the bolt holes or, for designs using other means of attachment to the vehicle structure, between the centroid of such means.

S4.3.1.5 [Reserved]

* * * * *

S5.1 *Seats with Type 1 or Type 2 seat belt anchorages.* With the seat in its rearmost position, apply a force of 22,241 N in the direction in which the seat faces to a pelvic body block as described in Figure 2A, in a plane parallel to the longitudinal centerline of the vehicle, with an initial force application angle of not less than 5 degrees or more than 15 degrees above the horizontal. Apply the force at the onset rate of not more than 222,411 N

per second. Attain the 22,241 N force in not more than 30 seconds and maintain it for 10 seconds. At the manufacturer's option, the pelvic body block described in Figure 2B may be substituted for the pelvic body block described in Figure 2A to apply the specified force to the center set(s) of anchorages for any group of three or more sets of anchorages that are simultaneously loaded in accordance with S4.2.4 of this standard.

S5.2 *Seats with Type 2 or automatic seat belt anchorages.* With the seat in its rearmost position, apply forces of 13,345 N in the direction in which the seat faces simultaneously to a pelvic body block, as described in Figure 2A, and an upper torso body block, as described in Figure 3, in a plane parallel to the longitudinal centerline of the vehicle, with an initial force application angle of not less than 5 degrees nor more than 15 degrees above the horizontal. Apply the forces at the onset rate of not more than 133,447 N per second. Attain the 13,345 N force in not more than 30 seconds and maintain it for 10 seconds. At the manufacturer's option, the pelvic body block described in Figure 2B may be substituted for the pelvic body block described in Figure 2A to apply the specified force to the center set(s) of anchorages for any group of three or more sets of anchorages that are simultaneously loaded in accordance with S4.2.4 of this standard.

* * * * *

S6. *Owner's Manual Information.* The owner's manual in each vehicle with a gross vehicle weight rating of 4,536 kg or less manufactured after September 1, 1987 shall include:

* * * * *

16. In § 571.210, Figure 2 ''Body Block for Lap Belt Anchorage'' would be removed. Figure 2A ''Body Block for Lap Belt Anchorage,'' Figure 2B ''Optional Body Block for Center Seating Positions,'' and Figure 3 ''Body Block for Combination Shoulder and Lap Belt Anchorage'' after S5.2, and preceding S6, would be revised to read as follows:

BILLING CODE 4910–59–P

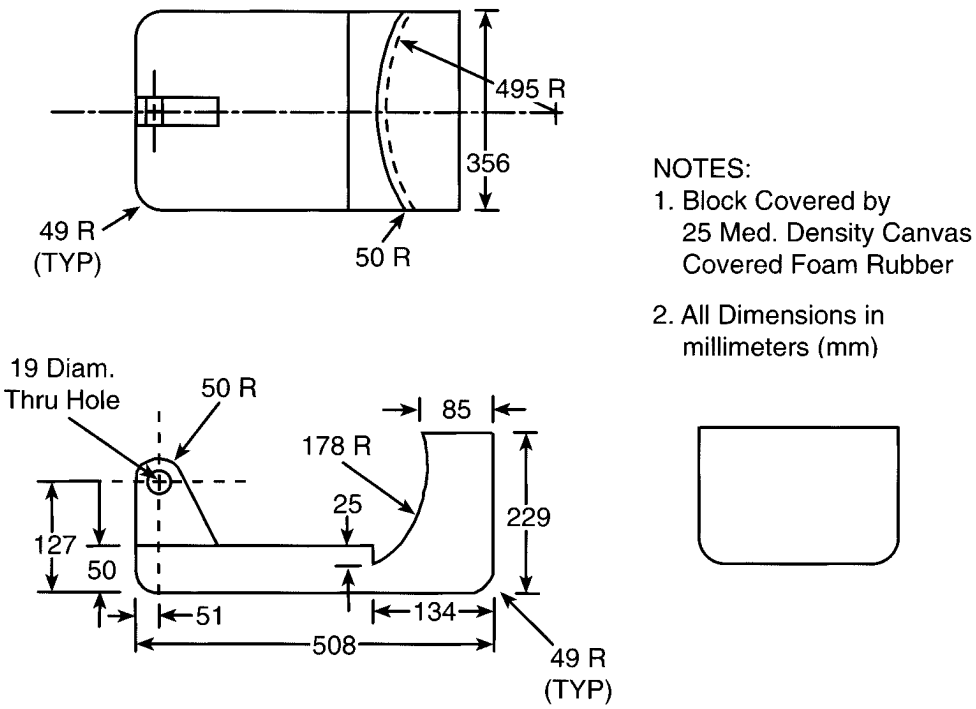

Figure 2A.—BODY BLOCK FOR LAP BELT ANCHORAGE

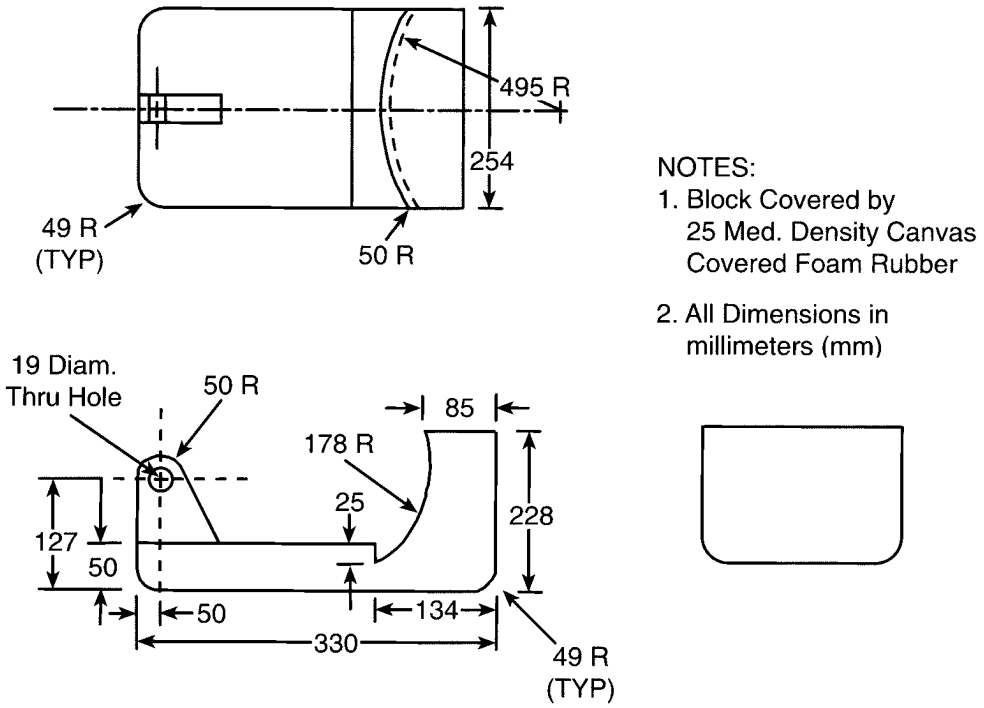

Figure 2B.—OPTIONAL BODY BLOCK FOR CENTER SEATING POSITIONS

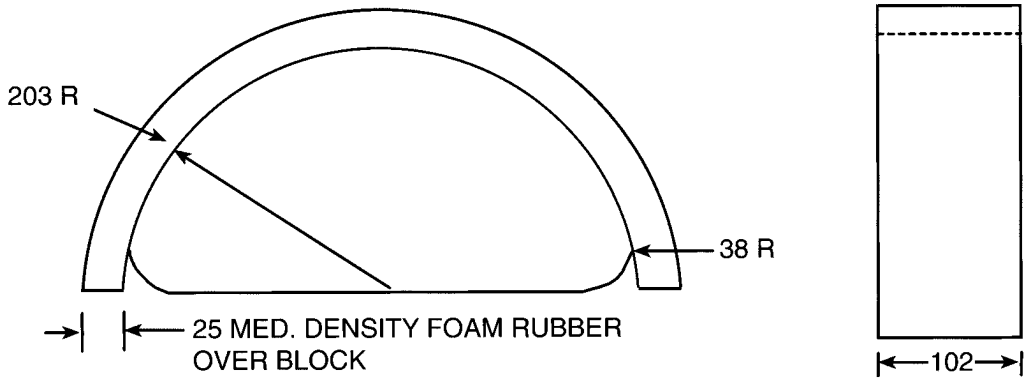

Figure 3.—BODY BLOCK FOR COMBINATION SHOULDER AND LAP BELT ANCHORAGE
All dimensions in millimeters (mm)

BILLING CODE 4910–59–C

17. Section 571.219 is amended by revising S3; revising S5; revising S6.1; revising S6.2; and revising in S7.7, paragraph (b) to read as follows:

§ 571.219 Standard No. 219, Windshield zone intrusion.

* * * * *

S3. *Application.* This standard applies to passenger cars and to multipurpose passenger vehicles, trucks and buses of 4,536 kilograms or less gross vehicle weight rating. However, it does not apply to forward control vehicles, walk-in van-type vehicles, or to open-body-type vehicles with fold-down or removable windshields.

* * * * *

S5. *Requirement.* When the vehicle travelling longitudinally forward at any speed up to and including 48 km/h impacts a fixed collision barrier that is perpendicular to the line of travel of the vehicle, under the conditions of S7, no part of the vehicle outside the occupant compartment, except windshield molding and other components designed to be normally in contact with the windshield, shall penetrate the protected zone template, affixed according to S6, to a depth of more than 6 mm, and no such part of a vehicle shall penetrate the inner surface of that portion of the windshield, within the DLO, below the protected zone defined in S6.

S6. *Protected zone template.*

S6.1 The lower edge of the protected zone is determined by the following procedure (See Figure 1).

(a) Place a 165 mm diameter rigid sphere, with a mass of 6.8 kg in a position such that it simultaneously contacts the inner surface of the windshield glazing and the surface of the instrument panel, including padding. If any accessories or equipment such as the steering control system obstruct positioning of the sphere, remove them for the purposes of this procedure.

(b) Draw the locus of points on the inner surface of the windshield contactable by the sphere across the width of the instrument panel. From the outermost contactable points, extend the locus line horizontally to the edges of the glazing material.

(c) Draw a line on the inner surface of the windshield below and 13 mm distant from the locus line.

(d) The lower edge of the protected zone is the longitudinal projection onto the outer surface of the windshield of the line determined in S6.1(c).

S6.2 The protected zone is the space enclosed by the following surfaces, as shown in Figure 1:

(a) The outer surface of the windshield in its precrash configuration.

(b) The locus of points 76 mm outward along perpendiculars drawn to each point on the outer surface of the windshield.

(c) The locus of lines forming a 45° angle with the outer surface of the windshield at each point along the top and side edges of the outer surface of the windshield and the lower edge of the protected zone determined in S6.1, in the plane perpendicular to the edge at that point.

* * * * *

(b) Except as specified in S7.6, a multipurpose passenger vehicle, truck or bus is loaded to its unloaded vehicle weight, plus 136 kg or its rated cargo and luggage capacity, whichever is less, secured to the vehicle, plus a 50th-percentile test dummy as specified in part 572 of this chapter at each front outboard designated seating postion and at any other position whose protection system is required to be tested by a dummy under the provisions of Standard No. 208. Each dummy is restrained only by means that are installed for protection at its seating position. The load is distributed so that the mass on each axle as measured at the tire-ground interface is in proportion to its GAWR. If the mass on any axle when the vehicle is loaded to its unloaded vehicle weight plus dummy mass exceeds the axle's proportional share of the test mass, the remaining mass is placed so that the mass on that axle remains the same. For the purposes of this section, unloaded vehicle weight does not include the mass of work-performing accessories. Vehicles are tested to a maximum unloaded vehicle weight of 2,495 kg.

* * * * *

18. Section 571.219 is amended by revising Figure 1 that follows S7.7 to read as follows:

BILLING CODE 4910–59–P

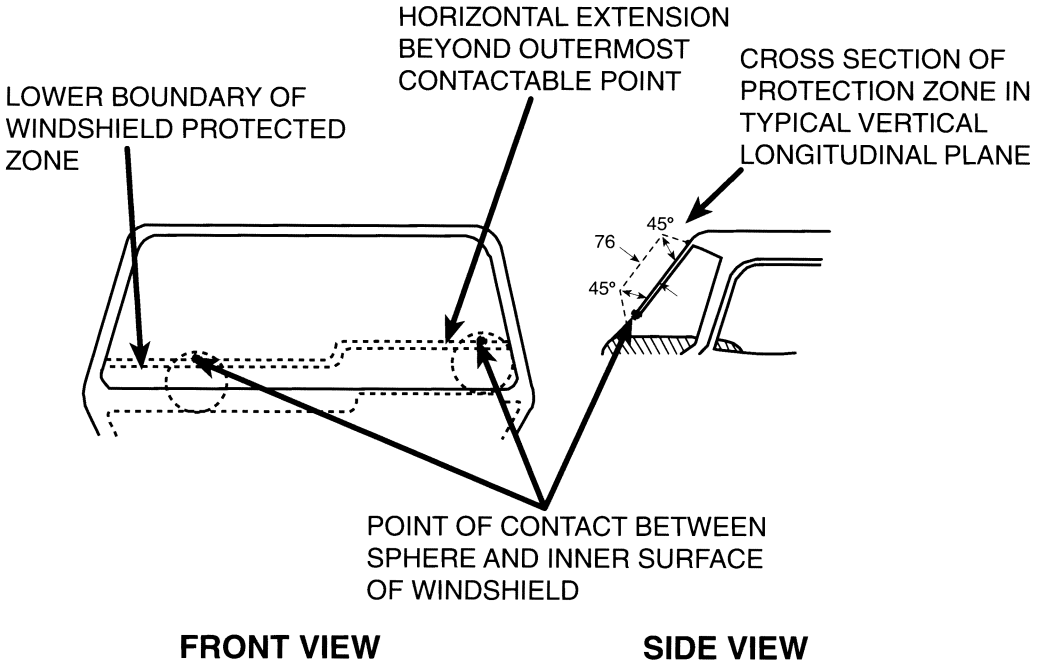

Figure 1.—WINDSHIELD PROTECTION ZONE
All dimensions in millimeters (mm)

BILLING CODE 4910–59–C

19. Section 571.220 is amended by revising S4; revising S5.2; revising S5.4; revising S5.5; and revising S6.1 to read as follows:

§ 571.220 Standard No. 220, School bus rollover protection.

* * * * *

S4. *Requirements.* When a force in Newtons equal to 1½ times the unloaded vehicle weight in kilograms multiplied by 9.8 m/sec^2 is applied to the roof of the vehicle's body structure through a force application plate as specified in S5, Test procedures—

(a) The downward vertical movement at any point on the application plate shall not exceed 130 mm and

(b) Each emergency exit of the vehicle provided in accordance with Standard No. 217 (§ 571.217) shall be capable of opening as specified in that standard during the full application of the force and after release of the force, except that an emergency exit located in the roof of the vehicle is not required to be capable of being opened during the application of the force. A particular vehicle (i.e., test specimen) need not meet the emergency exit opening requirement after release of force if it is subjected to the emergency exit opening requirements during the full application of the force.

* * * * *

S5.2 Use a flat, rigid, rectangular force application plate that is measured with respect to the vehicle roof longitudinal and lateral centerlines,

(a) In the case of a vehicle with a GVWR of more than 4,536 kg, 305 mm shorter than the vehicle roof and 914 mm wide; and

(b) In the case of a vehicle with a GVWR of 4,536 kg or less, 127 mm longer and 127 mm wider than the vehicle roof. For purposes of these measurements, the vehicle roof is that structure, seen in the top projected view, that coincides with the passenger and driver compartment of the vehicle.

* * * * *

S5.4 Apply an evenly-distributed vertical force in the downward direction to the force application plate at any rate not more than 13 mm per second, until a force of 2,224 N has been applied.

S5.5 Apply additional vertical force in the downward direction to the force application plate at a rate of not more than 13 mm per second until the force specified in S4. has been applied, and maintain this application of force.

* * * * *

S6.1 *Temperature.* The ambient temperature is any level between 0° C and 32° C.

* * * * *

20. Section 571.222 is amended by revising in S4, the definition of ''contactable surface''; revising S4.1; revising in S5., paragraphs (a) and (b); revising S5.1.2; revising S5.1.3; revising S5.1.3.1; revising S5.1.3.2; revising S5.1.3.3; revising S5.1.3.4; revising S5.1.4; revising S5.1.4.1; revising S5.1.4.2; revising S5.1.5; revising S5.2; revising S5.2.1; revising S5.2.3; revising S5.3.1.1; revising S5.3.1.2; revising S5.3.1.3; revising S5.3.2.1; revising S5.3.2.2; revising S6.3; revising S6.5; revising S6.5.1; revising S6.6; and revising S6.7 to read as follows:

S571.222 Standard No. 222, School bus passenger seating and crash protection.

* * * * *

S4. *Definitions. Contactable surface* means any surface within the zone specified in S5.3.1.1 that is contactable from any direction by the test device described in S6.6, except any surface on the front of a seat back or restraining barrier 76 mm or more below the top of the seat back or restraining barrier.

* * * * *

S4.1 The number of seating positions considered to be in a bench seat is expressed by the symbol W, and calculated as the bench width in millimeters divided by 381 and rounded to the nearest whole number.

S5. *Requirements.* (a) Each vehicle with a gross vehicle weight rating of more than 4,536 kg shall be capable of meeting any of the requirements set forth under this heading when tested under the conditions of S6. However, a particular school bus passenger seat (i.e., test specimen) in that weight class need not meet further requirements after having met S5.1.2 and S5.1.5, or having been subjected to either S5.1.3, S5.1.4, or S5.3.

(b) Each vehicle with a gross vehicle weight rating of 4,536 kg or less shall be capable of meeting the following requirements at all seating positions other than the driver's seat:

(1)(A) In the case of vehicles manufactured before September 1, 1991, the requirements of §§ 571.208, 571.209, and 571.210 as they apply to multipurpose passenger vehicles; or

(B) In the case of vehicles manufactured on or after September 1, 1991, the requirements of S4.4.3.3 of § 571.208 and the requirements of §§ 571.209 and 571.210 as they apply to school buses with a gross vehicle weight rating of 4,536 kg or less; and

(2) The requirements of S5.1.2, S5.1.3, S5.1.4, S5.1.5, S5.3, and S5.4 of this standard. However, the requirements of §§ 571.208 and 571.210 shall be met at W seating positions in a bench seat using a body block as specified in Figure 2 of this standard, and a particular school bus passenger seat (i.e., a test specimen) in that weight class need not meet further requirements after having met S5.1.2 and S5.1.5, or after having been subjected to either S5.1.3, S5.1.4, or S5.3 of this standard or § 571.210.

* * * * *

S5.1.2 *Seat back height and surface area.* Each school bus passenger seat shall be equipped with a seat back that, in the front projected view, has a front surface area above the horizontal plane that passes through the seating reference point, and below the horizontal plane 508 mm above the seating reference point, of not less than 90 percent of the seat bench width in millimeters multiplied by 508.

S5.1.3 *Seat performance forward.* When a school bus passenger seat that has another seat behind it is subjected to the application of force as specified in S5.1.3.1 and S5.1.3.2, and subsequently, the application of additional force to the seat back as specified in S5.1.3.3 and S5.1.3.4:

(a) The seat back force/deflection curve shall fall within the zone specified in Figure 1;

(b) Seat back deflection shall not exceed 356 mm; (for determination of (a) and (b) the force/deflection curve describes only the force applied through the upper loading bar, and only the forward travel of the pivot attachment point of the upper loading bar, measured from the point at which the initial application of 44 N of force is attained.)

(c) The seat shall not deflect by an amount such that any part of the seat moves to within 102 mm of any part of another school bus passenger seat or restraining barrier in its originally installed position;

(d) The seat shall not separate from the vehicle at any attachment point; and

(e) Seat components shall not separate at any attachment point.

S5.1.3.1 Position the loading bar specified in S6.5 so that it is laterally centered behind the seat back with the bar's longitudinal axis in a transverse plane of the vehicle and in any horizontal plane between 102 mm above and 102 mm below the seating reference point of the school bus passenger seat behind the test specimen.

S5.1.3.2 Apply a force of 3,114W newtons horizontally in the forward direction through the loading bar at the pivot attachment point. Reach the specified load in not less than 5 nor more than 30 seconds.

S5.1.3.3 No sooner than 1.0 second after attaining the required force, reduce

that force to 1,557W newtons and, while maintaining the pivot point position of the first loading bar at the position where the 1,557W newtons is attained, position a second loading bar described in S6.5 so that it is laterally centered behind the seat back with the bar's longitudinal axis in a transverse plane of the vehicle and in the horizontal plane 406 mm above the seating reference point of the school bus passenger seat behind the test specimen, and move the bar forward against the seat back until a force of 44 N has been applied.

S5.1.3.4 Apply additional force horizontally in the forward direction through the upper bar until 452W joules of energy have been absorbed in deflecting the seat back (or restraining barrier). Apply the additional load in not less than 5 seconds nor more than 30 seconds. Maintain the pivot attachment point in the maximum forward travel position for not less than 5 seconds nor more than 10 seconds and release the load in not less than 5 nor more than 30 seconds. (For the determination of S5.1.3.4 the force/deflection curve describes only the force applied through the upper loading bar, and the forward and rearward travel distance of the upper loading bar pivot attachment point measured from the position at which the initial application of 44 N of force is attained.)

S5.1.4 *Seat performance rearward.* When a school bus passenger seat that has another seat behind it is subjected to the application of force as specified in S5.1.4.1 and S5.1.4.2:

(a) Seat back force shall not exceed 9,786 N;

(b) Seat back deflection shall not exceed 254 mm; (for determination of (a) and (b) the force/deflection curve describes only the force applied through the loading bar, and only the rearward travel of the pivot attachment point of the loading bar, measured from the point at which the initial application of 222 N is attained.

(c) The seat shall not deflect by an amount such that any part of the seat moves to within 102 mm of any part of another passenger seat in its originally installed position;

(d) The seat shall not separate from the vehicle at any attachment point; and

(e) Seat components shall not separate at any attachment point.

S5.1.4.1 Position the loading bar described in S6.5 so that it is laterally centered forward of the seat back with the bar's longitudinal axis in a transverse plane of the vehicle and in the horizontal plane 343 mm above the seating reference point of the test specimen, and move the loading bar rearward against the seat back until a force of 222 N has been applied.

S5.1.4.2 Apply additional force horizontally rearward through the loading bar until 316W joules (J) of energy has been absorbed in deflecting the seat back. Apply the additional load in not less than 5 seconds nor more than 30 seconds. Maintain the pivot attachment point in the maximum rearward travel position for not less than 5 seconds nor more than 10 seconds and release the load in not less than 5 seconds nor more than 30 seconds. (For determination of S5.1.4.2 the force deflection curve describes the force applied through the loading bar and the rearward and forward travel distance of the loading bar pivot attachment point measured from the position at which the initial application of 222 N of force is attained.)

S5.1.5 *Seat cushion retention.* In the case of school bus passenger seats equipped with seat cushions, with all manual attachment devices between the seat and the seat cushion in the manufacturer's designated position for attachment, the seat cushion shall not separate from the seat at any attachment point when subjected to an upward force in newtons of 5 times the mass of the seat cushion in kilograms and multiplied by 9.8 m/s^2, applied in any period of not less than 1 nor more than 5 seconds, and maintained for 5 seconds.

S5.2 *Restraining barrier requirements.* Each vehicle shall be equipped with a restraining barrier forward of any designated seating position that does not have the rear surface of another school bus passenger seat within 610 mm of its seating reference point, measured along a horizontal longitudinal line through the seating reference point in the forward direction.

S5.2.1 *Barrier-seat separation.* The horizontal distance between the restraining barrier's rear surface and the seating reference point of the seat in front of which the barrier is required shall not be more than 610 mm measured along a horizontal longitudinal line through the seating reference point in the forward direction.

* * * * *

S5.2.3 *Barrier performance forward.* When force is applied to the restraining barrier in the same manner as specified in S5.1.3.1 through S5.1.3.4 for seating performance tests:

(a) The restraining barrier force/deflection curve shall fall within the zone specified in Figure 1;

(b) Restraining barrier deflection shall not exceed 356 mm; (for computation of (a) and (b) the force/deflection curve describes only the force applied through the upper loading bar, and only the forward travel of the pivot attachment point of the loading bar, measured from the point at which the initial application of 44 N of force is attained.)

(c) Restraining barrier deflection shall not interfere with normal door operation;

(d) The restraining barrier shall not separate from the vehicle at any attachment point; and

(e) Restraining barrier components shall not separate at any attachment point.

* * * * *

S5.3.1.1 The head protection zones in each vehicle are the spaces in front of each school bus passenger seat which are not occupied by bus sidewall, window, or door structure and which, in relation to that seat and its seating reference point, are enclosed by the following planes;

(a) Horizontal planes 305 mm and 1016 mm above the seating reference point;

(b) A vertical longitudinal plane tangent to the inboard (aisle side) edge of the seat; and

(c) A vertical longitudinal plane 83 mm inboard of the outboard edge of the seat;

(d) Vertical transverse planes through and 762 mm forward of the reference point.

S5.3.1.2 *Head form impact requirement.* When any contactable surface of the vehicle within the zones specified in S5.3.1.1 is impacted from any direction at 6.7 m/s by the head form described in S6.6, the axial acceleration at the center of gravity of the head form shall be such that the expression

$$\left[\frac{1}{t1-t2}\int_{t1}^{t2} a\,dt\right]^{2.5}(t1-t2)$$

shall not exceed 1,000 where ''a'' is the axial acceleration expressed as a multiple of ''*g*'' (the acceleration due to gravity), and ''t_1'' and ''t_2'' are any two points in time during the impact.

S5.3.1.3 *Head form force distribution.* When any contactable surface of the vehicle within the zones specified in S5.3.1.1 is impacted from any direction at 6.7 m/s by the head form described in S6.6, the energy necessary to deflect the impacted material shall be not less than 4.5 joules before the force level on the head form exceeds 667 N. When any contactable surface within such zones is impacted by the head form from any direction at 1.5 m/s the contact area on the head

form surface shall be not less than 1,935 mm^2.

* * * * *

S5.3.2.1 The leg protection zones of each vehicle are those parts of the school bus passenger seat backs and restraining barriers bounded by horizontal planes 305 mm above and 102 mm below the seating reference point of the school bus passenger seat immediately behind the seat back or restraining barrier.

S5.3.2.2 When any point on the rear surface of that part of a seat back or restraining barrier within any zone specified in S5.3.2.1 is impacted from any direction at 4.9 m/s by the knee form specified in S6.7, the resisting force of the impacted material shall not exceed 2,669 N and the contact area on the knee form surface shall not be less than 1,935 mm^2.

* * * * *

S6.3 *Temperature.* The ambient temperature is any level between 0 degrees C and 32 degrees C.

* * * * *

S6.5 *Loading bar.* The loading bar is a rigid cylinder with an outside diameter of 152 mm that has hemispherical ends with radii of 76 mm and with a surface roughness that does not exceed 1.6 µm, root mean square. The length of the loading bar is 102 mm less than the width of the seat back in each test. The stroking mechanism applies force through a pivot attachment at the center point of the loading bar which allows the loading bar to rotate in a horizontal plane 30 degrees in either direction from the transverse position.

S6.5.1 A vertical or lateral force of 17,792 N applied externally through the pivot attachment point of the loading bar at any position reached during a test specified in this standard shall not deflect that point more than 25 mm.

S6.6 *Head form.* The head form for the measurement of acceleration is a rigid surface comprised of two hemispherical shapes, with total equivalent mass of 5.2 kg. The first of the two hemispherical shapes has a diameter of 166 mm. The second of the two hemispherical shapes has a 50 mm diameter and is centered as shown in Figure 3 to protrude from the outer surface of the first hemispherical shape. The surface roughness of the hemispherical shapes does not exceed 1.6 µm, root mean square.

* * * * *

S6.7 *Knee form.* The knee form for measurement of force is a rigid 76 millimeter-diameter cylinder, with an equivalent weight of 44 N that has one hemispherical end with a 38 mm radius forming a contact surface of the knee form. The hemispherical surface roughness does not exceed 1.6 µm, root mean square.

* * * * *

21. In § 571.222, Figure 1, ''Force/Deflection Zone'', Figure 2, ''Body Block for Lap Belt'', and Figure 3 after S6.8 are revised to read as follows:

BILLING CODE 4910–59–P

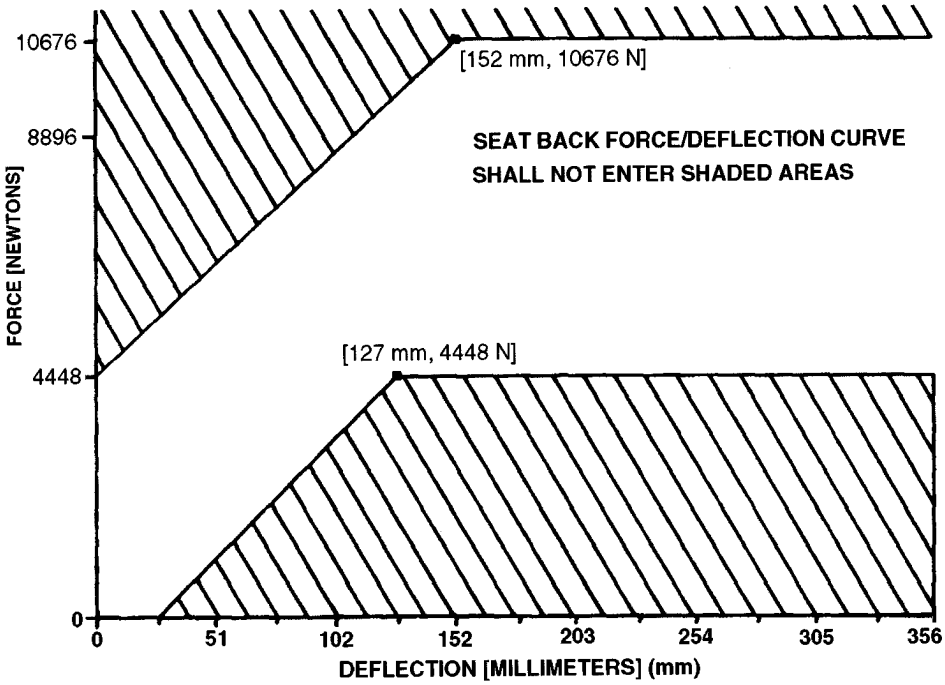

Figure 1.—Force/Deflection Zone

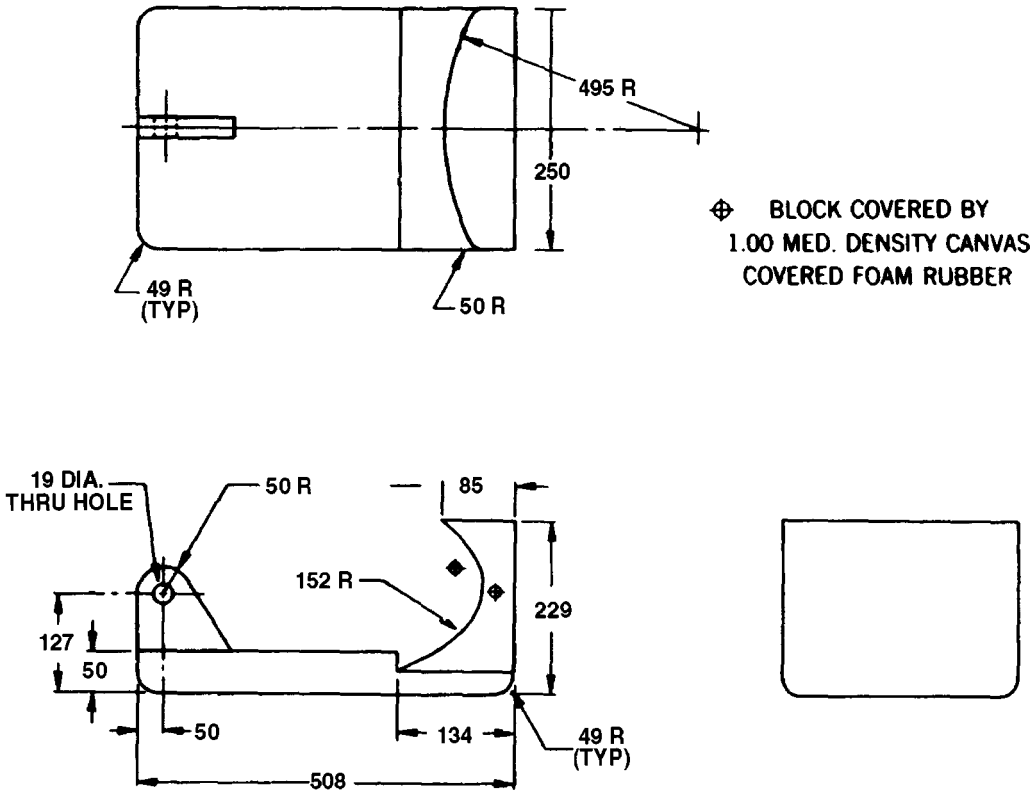

Figure 2.—Body Block for Lap Belt
All Dimensions in Millimeters (mm)

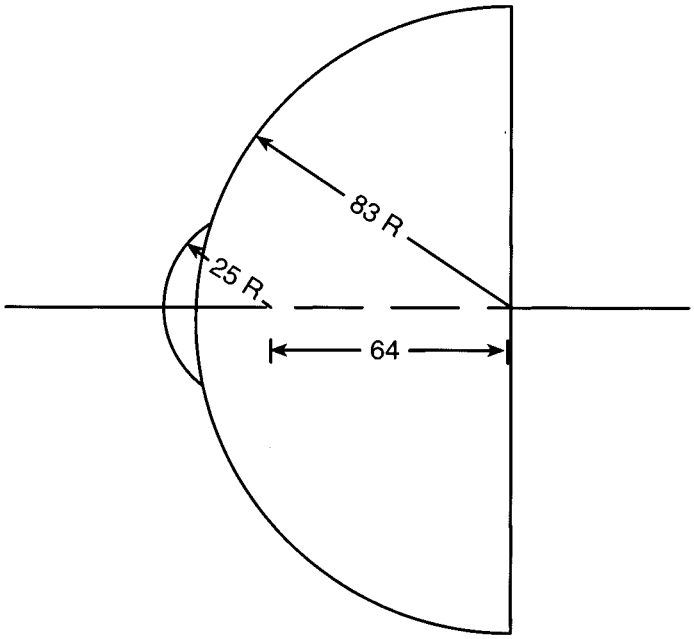

Figure 3
All dimensions in millimeters (mm)

BILLING CODE 4910–59–C

22. Section 571.301 is amended by revising S3; revising S5.5; revising S5.6; revising S6; revising S6.1; revising S6.2; revising S6.3; revising S6.5; revising S6.6; revising S7.1.6; revising S7.3; revising S7.5.1; revising S7.5.2; revising S7.5.4; and revising S7.5.5 to read as follows:

S571.301 Standard No. 301, Fuel system integrity.

* * * * *

S3. *Application.* This standard applies to passenger cars, and to multipurpose passenger vehicles, trucks and buses that have a GVWR of 4,536 kg or less and use fuel with a boiling point above 0° C, and to school buses that have a GVWR greater than 4,536 kg and use fuel with a boiling point above 0° C.

* * * * *

S5.5 *Fuel spillage; Barrier crash.* Fuel spillage in any fixed or moving barrier crash test shall not exceed 28 g from impact until motion of the vehicle has ceased, and shall not exceed a total of 142 g in the 5-minute period following cessation of motion. For the subsequent 25-minute period, fuel spillage during any 1 minute interval shall not exceed 28 g.

S5.6 *Fuel spillage; rollover.* Fuel spillage in any rollover test, from the onset of rotational motion, shall not exceed a total of 142 g for the first 5 minutes of testing at each successive 90° increment. For the remaining test period, at each increment of 90° fuel spillage during any 1 minute interval shall not exceed 28 g.

* * * * *

S6. *Test requirements.* Each vehicle with a GVWR of 4,536 kg or less shall be capable of meeting the requirements of any applicable barrier crash test followed by a static rollover, without alteration of the vehicle during the test sequence. A particular vehicle need not meet further requirements after having been subjected to a single barrier crash test and a static rollover test.

S6.1 *Frontal barrier crash.* When the vehicle travelling longitudinally forward at any speed up to and including 48 km/h impacts a fixed collision barrier that is perpendicular to the line of travel of the vehicle, or at any angle up to 30° in either direction from the perpendicular to the line of travel of the vehicle, with 50th-percentile test dummies as specified in part 572 of this chapter at each front outboard designated seating position and at any other position whose protection system is required to be tested by a dummy under the provisions of Standard No. 208, under the applicable conditions of S7., fuel spillage shall not exceed the limits of S5.5.

S6.2 *Rear moving barrier crash.* When the vehicle is impacted from the rear by a barrier moving at 48 km/h, with test dummies as specified in part 572 of this chapter at each front outboard designated seating position, under the applicable conditions of S7., fuel spillage shall not exceed the limits of S5.5.

S6.3 *Lateral moving barrier crash.* When the vehicle is impacted laterally on either side by a barrier moving at 32 km/h with 50th-percentile test dummies as specified in part 572 of this chapter at positions required for testing to Standard No. 208, under the applicable conditions of S7., fuel spillage shall not exceed the limits of S5.5.

* * * * *

S6.5 *Moving contoured barrier crash.* When the moving contoured barrier assembly traveling longitudinally forward at any speed up to and including 48 km/h impacts the test vehicle (school bus with a GVWR exceeding 4,536 kg) at any point and angle, under the applicable conditions of S7.1 and S7.5, fuel spillage shall not exceed the limits of S5.5.

S6.6 *Anti-siphoning test for alcohol fuel vehicles.* Each vehicle shall have means that prevent any hose made of vinyl plastic or rubber, with a length of not less than 1200 millimeters (mm) and an outside diameter of not less than 5.2 mm, from contacting the level surface of the liquid fuel in the vehicle's fuel tank or fuel system, when the hose is

inserted into the filler neck attached to the fuel tank with the fuel tank filled to any level from 90 to 95 percent of capacity.

* * * * *

S7.1.6 The vehicle, including test devices and instrumentation, is loaded as follows:

(a) Except as specified in S7.1.1, a passenger car is loaded to its unloaded vehicle weight plus its rated cargo and luggage capacity weight, secured in the luggage area, plus the necessary test dummies as specified in S6., restrained only by means that are installed in the vehicle for protection at its seating position.

(b) Except as specified in S7.1.1, a multipurpose passenger vehicle, truck, or bus with a GVWR of 4,536 kg or less is loaded to its unloaded vehicle weight, plus the necessary test dummies, as specified in S6., plus 136 kg or its rated cargo and luggage capacity weight, whichever is less, secured to the vehicle and distributed so that the weight on each axle as measured at the tire-ground interface is proportional to its GAWR. If the weight on any axle, when the vehicle is loaded to unloaded vehicle weight plus dummy weight, exceeds the axle's proportional share of the test weight, the remaining weight shall be placed so that the weight on that axle remains the same. Each dummy shall be restrained only by means that are installed in the vehicle for protection at its seating position.

(c) Except as specified in S7.1.1, a school bus with a GVWR greater than 4,536 kg is loaded to its unloaded vehicle weight, plus 54 kg of unsecured mass at each designated seating position.

* * * * *

S7.3 *Rear moving barrier test conditions.* The rear moving barrier test conditions are those specified in S8.2 of Standard No. 208, 49 CFR 571.208, except for the positioning of the barrier and the vehicle. The barrier and test vehicle are positioned so that at impact—

(a) The vehicle is at rest in its normal attitude;

(b) The barrier is traveling at 48 km/h with its face perpendicular to the longitudinal centerline of the vehicle; and

(c) A vertical plane through the geometric center of the barrier impact surface and perpendicular to that surface coincides with the longitudinal centerline of the vehicle.

* * * * *

S7.5.1 The moving barrier, which is mounted on a carriage as specified in Figure 1, is of rigid construction, symmetrical about a vertical longitudinal plane. The contoured impact surface, which is 629 mm high and 1,981 mm wide, conforms to the dimensions shown in Figure 2, and is attached to the carriage as shown in that figure. The ground clearance to the lower edge of the impact surface is 133 mm ± 13 mm. The wheelbase is 3,048 mm ± 50 mm.

S7.5.2 The moving contoured barrier, including the impact surface, supporting structure, and carriage, has a mass of 1,814 kg ± 23 kg with the mass distributed so that 408 kg ± 11 kg is at each rear wheel and 499 kg ± 11 kg is at each front wheel. The center of gravity is located 1,372 mm ± 38 mm rearward of the front wheel axis, in the vertical longitudinal plane of symmetry, 401 mm above the ground. The moment of inertia about the center of gravity is:

$I_x = 367\ kgm^2 \pm 18.4\ kgm^2$

$I_z = 4{,}711\ kgm^2 \pm 236\ kgm^2$

* * * * *

S7.5.4 The moving barrier assembly is equipped with G78–15 pneumatic tires with a tread width of 152 mm ± 25 mm, inflated to 165 kPa.

S7.5.5 The concrete surface upon which the vehicle is tested is level, rigid, and of uniform construction, with a skid number of 75 when measured in accordance with American Society of Testing and Materials Method E: 274–65T at 64 km/h, omitting water delivery as specified in paragraph 7.1 of that method.

* * * * *

23. Section 571.302 is amended by revising S4.2; revising the text of S4.2.2; revising S4.3; revising S5.1; revising S5.1.1; revising S5.1.2; revising S5.1.3; revising S5.1.4; revising S5.2.1; revising S5.2.3; and revising S5.3 to read as follows:

§ 571.302 Flammability of interior materials.

* * * * *

S4.2 Any portion of a single or composite material which is within 13 mm of the occupant compartment air space shall meet the requirements of S4.3.

* * * * *

S4.2.2 Any material that adheres to other materials at every point of contact shall meet the requirements of S4.3 when tested as a composite with the other material(s).

* * * * *

Material A has a non-adhering interface with material B and is tested separately. Part of material B is within 13 mm of the occupant compartment air space, and materials B and C adhere at every point of contact; therefore, B and C are tested as a composite. The cut is in material C as shown, to make a specimen 13 mm thick.

S4.3(a) When tested in accordance with S5, material described in S4.1 and S4.2 shall not burn, nor transmit a flame front across its surface, at a rate of more than 102 mm per minute. The requirement concerning transmission of a flame front shall not apply to a surface created by cutting a test specimen for purposes of testing pursuant to S5.

(b) If a material stops burning before it has burned for 60 seconds from the start of timing, and has not burned more than 51 mm from the point where the timing was started, it shall be considered to meet the burn-rate requirement of S4.3(a).

S5.1 *Conditions.*

S5.1.1 The test is conducted in a metal cabinet for protecting the test specimens from drafts. The interior of the cabinet is 381 mm long, 203 mm deep, and 356 mm high. It has a glass observation window in the front, a closable opening to permit insertion of the specimen holder, and a hole to accommodate tubing for a gas burner. For ventilation, it has a 13 mm clearance space around the top of the cabinet, ten holes in the base of the cabinet, each hole 19 mm in diameter and legs to elevate the bottom of the cabinet by 10 mm, all located as shown in Figure 1.

S5.1.2 Prior to testing, each specimen is conditioned for 24 hours at a temperature of 21° C, and a relative humidity of 50 percent, and the test is conducted under those ambient conditions.

S5.1.3 The test specimen is inserted between two matching U-shaped frames of metal stock 25 mm wide and 10 mm high. The interior dimensions of the U-shaped frames are 51 mm wide by 330 mm long. A specimen that softens and bends at the flaming end so as to cause erratic burning is kept horizontal by supports consisting of thin, heat-resistant wires, spanning the width of the U-shaped frame under the specimen at 25 mm intervals. A device that may be used for supporting this type of material is an additional U-shaped frame, wider than the U-shaped frame containing the specimen, spanned by 10-mil wires of heat-resistant composition at 25 mm intervals, inserted over the bottom U-shaped frame.

S5.1.4 A bunsen burner with a tube of 10 mm inside diameter is used. The gas adjusting valve is set to provide a flame, with the tube vertical, of 38 mm in height. The air inlet to the burner is closed.

* * * * *

S5.2.1 Each specimen of material to be tested shall be a rectangle 102 mm wide by 356 mm long, wherever possible. The thickness of the specimen is that of the single or composite material used in the vehicle, except that if the material's thickness exceeds 13 mm, the specimen is cut down to that thickness measured from the surface of the specimen closest to the occupant compartment air space. Where it is not possible to obtain a flat specimen because of surface curvature, the specimen is cut to not more than 13 mm in thickness at any point. The maximum available length or width of a specimen is used where either dimension is less than 356 mm or 102 mm, respectively, unless surrogate testing is required under S4.1.1.

* * * * *

S5.2.3 Material with a napped or tufted surface is placed on a flat surface and combed twice against the nap with a comb having seven to eight smooth, rounded teeth per 25 mm.

S5.3 *Procedure.*

(a) Mount the specimen so that both sides and one end are held by the U-shaped frame, and one end is even with the open end of the frame. Where the maximum available width of a specimen is not more than 51 mm, so that the sides of the specimen cannot be held in the U-shaped frame, place the specimen in position on wire supports as described in S5.1.3, with one end held by the closed end of the U-shaped frame.

(b) Place the mounted specimen in a horizontal position, in the center of the cabinet.

(c) With the flame adjusted according to S5.1.4, position the bunsen burner and specimen so that the center of the burner tip is 19 mm below the center of the bottom edge of the open end of the specimen.

(d) Expose the specimen to the flame for 15 seconds.

(e) Begin timing (without reference to the period of application of the burner flame) when the flame from the burning specimen reaches a point 38 mm from the open end of the specimen.

(f) Measure the time that it takes the flame to progress to a point 38 mm from the clamped end of the specimen. If the flame does not reach the specified end point, time its progress to the point where flaming stops.

(g) Calculate the burn rate from the formula:

$B = 60 \times (D/T)$

Where:

B = Burn rate in millimeters per minute

D = Length the flame travels in millimeters, and

T = Time in seconds for the flame to travel D millimeters.

24. In § 571.302, the Figure named ''Illustrative Example—Occupant Compartment Air Space'' at S4.2.2 after the first sentence, and Figure 1, after S5.1.1 are revised to read as follows:

BILLING CODE 4910–59–P

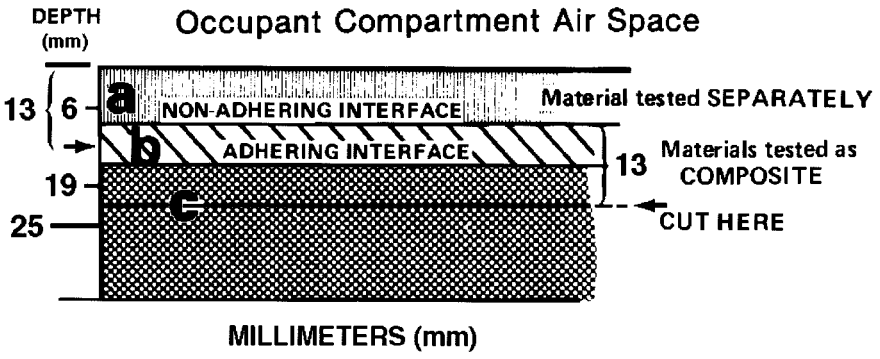

Occupant Compartment Air Space
All Dimensions in Millimeters (mm)

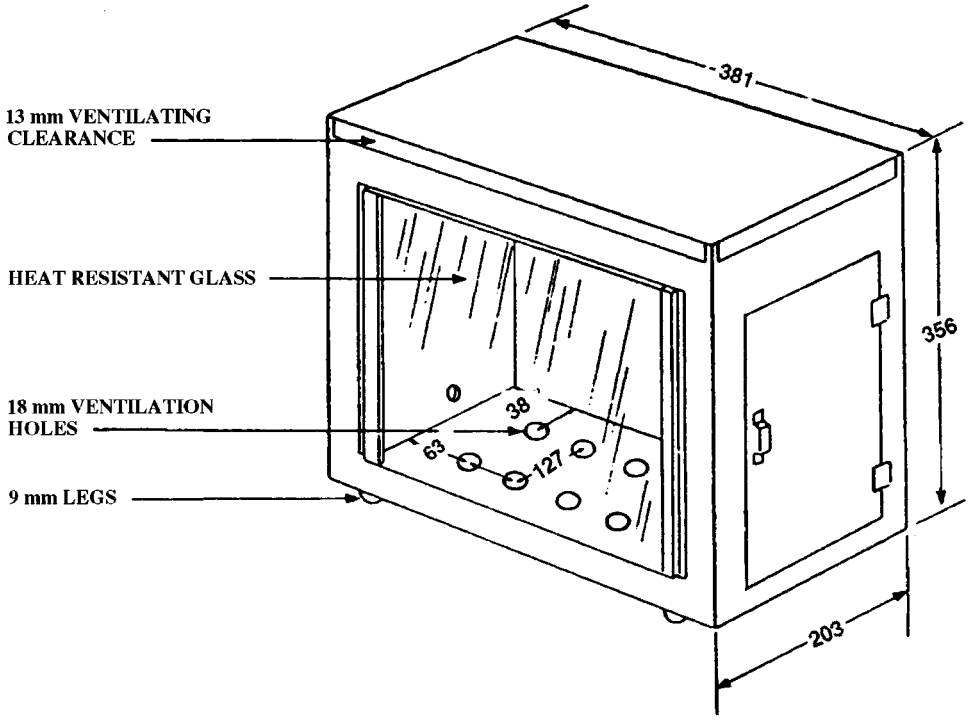

Figure 1
All Dimensions in Millimeters (mm)

Issued: May 13, 1998.

Ricardo Martinez,

Administrator.

[FR Doc. 98–13431 Filed 5–26–98; 8:45 am]

BILLING CODE 4910–59–C

Proposed Rules

Federal Register
Vol. 63, No. 101
Wednesday, May 27, 1998

This section of the FEDERAL REGISTER contains notices to the public of the proposed issuance of rules and regulations. The purpose of these notices is to give interested persons an opportunity to participate in the rule making prior to the adoption of the final rules.

DEPARTMENT OF THE TREASURY

Internal Revenue Service

26 CFR Part 1

[REG–119449–97]

RIN 1545–AV75

Qualified Zone Academy Bonds; Hearing Cancellation

AGENCY: Internal Revenue Service, Treasury.

ACTION: Cancellation of notice of public hearing on proposed regulations.

SUMMARY: This document provides notice of cancellation of a public hearing on proposed regulations under section 7805(f) providing guidance to holders and issuers of qualified zone academy bonds.

DATES: The public hearing originally scheduled for Wednesday, May 27, 1998, beginning at 10:00 a.m. is cancelled.

FOR FURTHER INFORMATION CONTACT: LaNita Van Dyke of the Regulations Unit, Assistant Chief Counsel (Corporate), (202) 622–7190, (not a toll free number).

SUPPLEMENTARY INFORMATION: The subject of the public hearing is proposed regulations under section 7805(f) of the Internal Revenue Code. A notice of proposed rulemaking and notice of public hearing appearing in the **Federal Register** on Wednesday, January 7, 1998 (63 FR 707), announced that the public hearing on proposed regulations under section 7805(f) of the Internal Revenue Code would be held on Wednesday, May 27, 1998, beginning at 10:00 a.m., in room 2615, Internal Revenue Building, 1111 Constitution Avenue, NW, Washington DC. The public hearing scheduled for Wednesday, May 27, 1998, is cancelled.

Cynthia E. Grigsby,

Chief, Regulations Unit, Assistant Chief Counsel, (Corporate).

[FR Doc. 98–13925 Filed 5–26–98; 8:45 am]

BILLING CODE 4830–01–U

ENVIRONMENTAL PROTECTION AGENCY

40 CFR Part 52

[CA 013–0073; FRL–6102–1]

Approval and Promulgation of Implementation Plans; California State Implementation Plan Revision, Bay Area Air Quality Management District

AGENCY: Environmental Protection Agency (EPA).

ACTION: Proposed rule.

SUMMARY: EPA is proposing a limited approval and limited disapproval of a revision to the California State Implementation Plan (SIP). This revision concerns the general provisions and definitions that are applicable to all regulations in the Bay Area Air Quality Management District.

The intended effect of proposing a limited approval and limited disapproval of this rule is to clarify the general provisions and definitions that apply to the regulation of emissions of volatile organic compounds (VOCs), oxides of nitrogen (NO_X), and other pollutants in accordance with the requirements of the Clean Air Act, as amended in 1990 (CAA or the Act). EPA's final action on this proposed rule will incorporate this rule into the federally approved SIP. EPA has evaluated the rule and is proposing a simultaneous limited approval and limited disapproval under provisions of the CAA regarding EPA action on SIP submittals and general rulemaking authority. While strengthening the SIP, this revision contains a public nuisance provision and references to a Manual of Procedures that are inappropriate for incorporation into the SIP. The limited disapproval portion of this proposed rulemaking will exclude elements that are not required by the Act.

DATES: Comments must be received on or before June 26, 1998.

ADDRESSES: Comments may be mailed to: Andrew Steckel, Rulemaking Office [AIR–4], Air Division, U.S. Environmental Protection Agency, Region IX, 75 Hawthorne Street, San Francisco, CA 94105–3901.

Copies of the rule are available for public inspection at EPA's Region IX office during normal business hours and at the following locations:

Bay Area Air Quality Management District, 939 Ellis Street, San Francisco, CA 94109

California Air Resources Board, Stationary Source Division, Rule Evaluation Section, 2020 ''L'' Street, Sacramento, CA 95812

FOR FURTHER INFORMATION CONTACT: Yvonne Fong, Rulemaking Office, [AIR–4], Air Division, U.S. Environmental Protection Agency, Region IX, 75 Hawthorne Street, San Francisco, CA 94105–3901, Telephone: (415) 744–1199.

SUPPLEMENTARY INFORMATION:

I. Applicability

The rule being proposed for approval into the California SIP is Bay Area Air Quality Management District, BAAQMD, Regulation 1, General Provisions and Definitions. This rule was submitted by the California Air Resources Board to EPA on May 13, 1991.

II. Background

On March 3, 1978, EPA promulgated a list of ozone nonattainment areas under the provisions of the 1977 Clean Air Act (1977 CAA or pre-amended Act), that included the San Francisco Bay Area. 43 FR 8964. On May 26, 1988, EPA notified the Governor of California, pursuant to section 110(a)(2)(H) of the pre-amended Act, that the Bay Area Air Quality Management District's portion of the SIP was inadequate to attain and maintain the ozone standard and requested that deficiencies in the existing SIP be corrected (EPA's SIP-Call). On November 15, 1990, amendments to the 1977 CAA were enacted. Pub. L. 101–549, 104 Stat. 2399, codified at 42 U.S.C. 7401–7671q.

On November 12, 1993, BAAQMD submitted a request for redesignation to attainment of the ozone standard. Subsequently, EPA evaluated and approved BAAQMD's request and the San Francisco Bay Area was reclassified as an attainment area.[1] 40 CFR 81.305.

This document addresses EPA's proposed action for BAAQMD Regulation 1, General Provisions and Definitions. The BAAQMD adopted this

[1] The San Francisco Bay Area was redesignated to attainment. See 60 FR 98 (May 22, 1995). The EPA proposed to redesignate the San Francisco Bay Area back to nonattainment for ozone based on a number of violations of the National Ambient Air Quality Standards (NAAQS) on December 19, 1997. See 62 FR 66578.

rule on December 19, 1990. This submitted rule was found to be complete on July 10, 1991, pursuant to EPA's completeness criteria that are set forth in 40 CFR part 51, appendix V;[2] and is being proposed for limited approval and limited disapproval.

BAAQMD Regulation 1 clarifies the definitions and general provisions that apply to the regulation of emissions of VOCs, NO_X, and other pollutants. These pollutants contribute to the production of ground level ozone and smog. BAAQMD Regulation 1 was originally adopted as part of BAAQMD's effort to achieve the National Ambient Air Quality Standard (NAAQS) for ozone and has been revised in response to EPA's SIP-Call. The following is EPA's evaluation and proposed action for BAAQMD Regulation 1.

III. EPA Evaluation and Proposed Action

In determining the approvability of a rule, EPA must evaluate the rule for consistency with the requirements of the CAA and EPA regulations, as found in section 110 of the CAA and 40 CFR part 51 (Requirements for Preparation, Adoption, and Submittal of Implementation Plans).

In addition, this rule was evaluated against the SIP enforceability guidelines found in ''Issues Relating to VOC Regulation Cutpoints, Deficiencies, and Deviations—Clarification to appendix D of November 24, 1987 **Federal Register**'' (EPA's 'Blue Book') and the EPA Region IX—California Air Resources Board document entitled ''Guidance Document for Correcting VOC Rule Deficiencies'' (April, 1991), and against other EPA policies. In general, these guidance documents have been set forth to ensure that VOC and other rules are fully enforceable and strengthen or maintain the SIP.

EPA previously approved various portions of BAAQMD Regulation 1, General Provisions and Definitions, into the SIP on September 2, 1981, July 6, 1982, and November 10, 1982. These portions were originally adopted by BAAQMD on September 5, 1979, May 21, 1980, December 17, 1980, and March 17, 1982. EPA has evaluated BAAQMD Regulation 1, submitted May 13, 1991, and compared it to the rule currently incorporated in the SIP. BAAQMD's submitted Regulation 1 includes the following significant changes from the SIP:

- The scope of the exemption in section 110.5 has been narrowed to prohibit the disposal of waste propellants, explosives, or pyrotechnics by manufacturing facilities in open outdoor fires, and
- Definitions for volatile organic compound and reduced sulfur compounds have been added in sections 236 and 237.

Although these changes will strengthen the SIP, this rule also contains elements that are not appropriate for incorporation into the SIP. Regulation 1 includes provisions in sections 600–604, which have been approved into the SIP, and section 605, which is a new portion of the rule, that reference the BAAQMD's Manual of Procedures (MOP). The MOP sets policy and procedures for permitting, CEQA review, sample and source testing, emission monitoring, and mobile source emission credits. Because the MOP contains policies which are regularly and often revised by the BAAQMD and because those policies are not always submitted to EPA for approval, the references to the MOP potentially provide for director's discretion which may alter the stringency of the federally approved SIP. While EPA previously approved some MOP references, we should not repeat or aggravate that error by approving sections 600–605 at this time.

Regulation 1, section 301 of the May 13, 1991 submittal contains a new provision that has not been previously incorporated into the SIP which prohibits sources from discharging quantities of air contaminants that cause a nuisance. EPA believes that nuisance provisions are inappropriate for inclusion in the SIP because they are not in any way required by the Act and do not specifically control criteria air pollutants. Nuisance provisions generally deal with complaints relating to odor or dust, problems which are appropriate for local air quality management district response. For these reasons, EPA believes it is inappropriate to incorporate nuisance provisions into the federally enforceable SIP. The removal of section 301 of Regulation 1 from the BAAQMD SIP submittal will have no effect on BAAQMD's ability to enforce its nuisance provision.

Because the elements described above are inappropriate for inclusion in the SIP, EPA cannot grant full approval of this rule under section 110(k)(3). Also, because the submitted rule is not composed of separable parts which meet all the applicable requirements of the CAA, EPA cannot grant partial approval of the rule under section 110(k)(3). However, EPA may grant a limited approval of the submitted rule under section 110(k)(3) in light of EPA's authority pursuant to section 301(a) to adopt regulations necessary to further air quality by strengthening the SIP. The approval is limited because EPA's action also contains a simultaneous limited disapproval. In order to strengthen the SIP, EPA is proposing a limited approval of BAAQMD's submitted Regulation 1 under sections 110(k)(3) and 301(a) of the CAA.

It should be noted that the rule covered by this proposed rulemaking has been adopted by the BAAQMD and is currently in effect in the BAAQMD. EPA's final limited disapproval action will not prevent the BAAQMD or EPA from enforcing this rule.

Nothing in this action should be construed as permitting or allowing or establishing a precedent for any future request for revision to any state implementation plan. Each request for revision to the state implementation plan shall be considered separately in light of specific technical, economic, and environmental factors and in relation to relevant statutory and regulatory requirements.

IV. Administrative Requirements

A. Executive Order 12866

The Office of Management and Budget (OMB) has exempted this regulatory action from E.O. 12866 review.

B. Regulatory Flexibility Act

Under the Regulatory Flexibility Act, 5 U.S.C. 600 *et seq.*, EPA must prepare a regulatory flexibility analysis assessing the impact of any proposed or final rule on small entities. 5 U.S.C. 603 and 604. Alternatively, EPA may certify that the rule will not have a significant impact on a substantial number of small entities. Small entities include small businesses, small not-for-profit enterprises, and government entities with jurisdiction over populations of less than 50,000.

SIP approvals under sections 110 and 301 of the CAA do not create any new requirements but simply approve requirements that the State is already imposing. Therefore, because the Federal SIP approval does not impose any new requirements, the Administrator certifies that it does not have a significant impact on any small entities affected. Moreover, due to the nature of the Federal-State relationship under the CAA, preparation of a flexibility analysis would constitute Federal inquiry into the economic reasonableness of state action. The Clean Air Act forbids EPA to base its action concerning SIPs on such grounds. *Union Electric Co.* v. *U.S. EPA,* 427 U.S.

[2] EPA adopted completeness criteria on February 16, 1990 (55 FR 5830) and, pursuant to section 110(k)(1)(A) of the CAA, revised the criteria on August 26, 1991 (56 FR 42216).

246, 255–66 (1976); 42 U.S.C. 7410(a)(2).

C. Unfunded Mandates

Under section 202 of the Unfunded Mandates Reform Act of 1995 (''Unfunded Mandates Act''), signed into law on March 22, 1995, EPA must prepare a budgetary impact statement to accompany any proposed or final rule that includes a Federal mandate that may result in estimated costs to State, local, or tribal governments in the aggregate; or to the private sector, of $100 million or more. Under section 205, EPA must select the most cost-effective and least burdensome alternative that achieves the objectives of the rule and is consistent with statutory requirements. Section 203 requires EPA to establish a plan for informing and advising any small governments that may be significantly or uniquely impacted by the rule.

EPA has determined that the approval action proposed does not include a Federal mandate that may result in estimated costs of $100 million or more to either State, local, or tribal governments in the aggregate, or to the private sector. This Federal action approves pre-existing requirements under State or local law, and imposes no new Federal requirements. Accordingly, no additional costs to State, local, or tribal governments, or to the private sector, result from this action.

D. Executive Order 13045

Protection of Children from Environmental Health Risks and Safety Risks. Executive Order 13045 (62 FR 19885, April 23, 1997), applies to any rule that is (1) likely to be ''economically significant'' as defined under Executive Order 12866, and (2) the Agency has reason to believe that the environmental health or safety risk addressed by the rule may have a disproportionate effect on children. If a regulatory action meets both criteria, the Agency must evaluate the environmental health or safety effects of the planned rule on children, and explain why the planned regulation is preferable to other potentially effective and reasonably feasible alternatives considered by the Agency.

This rule is not subject to E.O. 13045, ''Protection of Children from Environmental Health Risks and Safety Risks'' because this is not an ''economically significant'' regulatory action as defined by E.O. 12866, and because it does not involve decisions on environmental health or safety risks that may disproportionately affect children.

List of Subjects in 40 CFR Part 52

Environmental protection, Air pollution control, Hydrocarbons, Incorporation by reference, Intergovernmental relations, Nitrogen dioxide, Ozone, Particulate matter, Reporting and recordkeeping requirements, Sulfur oxides, Volatile organic compounds.

Authority: 42 U.S.C. 7401 *et seq.*

Dated: May 12, 1998.

Sally Seymour,

Acting Regional Administrator, Region IX.

[FR Doc. 98–13992 Filed 5–26–98; 8:45 am]

BILLING CODE 6560–50–P

ENVIRONMENTAL PROTECTION AGENCY

40 CFR Part 52

[FL–071–9810b; FRL–6015–5]

Approval and Promulgation of Implementation Plans; State of Florida

AGENCY: Environmental Protection Agency (EPA).

ACTION: Proposed rule.

SUMMARY: The EPA proposes to approve the State implementation plan (SIP) revision submitted by the Florida Department of Environmental Protection. In the final rules section of this **Federal Register**, the EPA is approving the State's SIP revision as a direct final rule without prior proposal because the Agency views this as a noncontroversial revision amendment and anticipates no adverse comments. A detailed rationale for the approval is set forth in the direct final rule. If no adverse comments are received in response to this proposed rule, no further activity is contemplated in relation to this proposed rule. If EPA receives adverse comments, the direct final rule will be withdrawn and all public comments received will be addressed in a subsequent final rule based on this proposed rule. The EPA will not institute a second comment period on this document. Any parties interested in commenting on this document should do so at this time.

DATES: To be considered, comments must be received by June 26, 1998.

ADDRESSES: Written comments on this action should be addressed to Karla L. McCorkle at the Environmental Protection Agency, Region 4 Air Planning Branch, 61 Forsyth Street, SW, Atlanta, Georgia 30303. Copies of documents relative to this action are available for public inspection during normal business hours at the following locations. The interested persons wanting to examine these documents should make an appointment with the appropriate office at least 24 hours before the visiting day. Reference file FL–071. The Region 4 office may have additional background documents not available at the other locations.

Air and Radiation Docket and Information Center (Air Docket 6102), U.S. Environmental Protection Agency, 401 M Street, SW, Washington, DC 20460.

Environmental Protection Agency, Region 4 Air Planning Branch, 61 Forsyth Street, SW, Atlanta, Georgia 30303. Florida Department of Environmental Protection, Air Resources Management Division, Twin Towers Office Building, 2600 Blair Stone Road, Tallahassee, Florida 32399–2400.

FOR FURTHER INFORMATION CONTACT: Karla L. McCorkle at 404/562–9043 (E-mail: mccorkle.karla@epamail.epa.gov).

SUPPLEMENTARY INFORMATION: For additional information see the direct final rule which is published in the rules section of this **Federal Register**.

Dated: May 10, 1998.

A. Stanley Meiburg,

Acting Regional Administrator, Region 4.

[FR Doc. 98–13988 Filed 5–26–98; 8:45 am]

BILLING CODE 6560–50–P

ENVIRONMENTAL PROTECTION AGENCY

40 CFR Part 63

[FRL–6014–6]

Delegation of National Emission Standards for Hazardous Air Pollutants for Source Categories; State of Nevada; Nevada Division of Environmental Protection; Washoe County District Health Department

AGENCY: Environmental Protection Agency (EPA).

ACTION: Proposed rule.

SUMMARY: Pursuant to section 112(l) of the 1990 Clean Air Act (CAA), the Nevada Division of Environmental Protection (NDEP) and the Washoe County District Health Department (WCDHD) requested delegation of specific national emission standards for hazardous air pollutants (NESHAPs). WCDHD also requested approval for its program for receiving delegation of unchanged NESHAPs applicable to sources not subject to Title V of the CAA. In the Rules section of this **Federal Register**, EPA is granting NDEP and WCDHD the authority to implement and enforce specified NESHAPs, and is

approving WCDHD's general program for receiving delegation of unchanged NESHAPs. The direct final rule also explains the procedure for future delegation of NESHAPs to NDEP and WCDHD. EPA is taking direct final action without prior proposal because the Agency views this as a noncontroversial action and anticipates no adverse comments. A detailed rationale for this approval is set forth in the direct final rule. If no relevant adverse comments are received in response to this document, no further activity is contemplated in relation to this proposed rule. If EPA receives relevant adverse comments, the direct final rule will not take effect and all public comments received will be addressed in a subsequent final rule based on this proposed rule. The EPA will not institute a second comment period on this proposal. Any parties interested in commenting on this proposal should do so at this time.

DATES: Comments on this proposed rule must be received in writing by June 26, 1998.

ADDRESSES: Written comments on this action should be addressed to: Andrew Steckel, Rulemaking Office (AIR–4), Air Division, U.S. Environmental Protection Agency, Region IX, 75 Hawthorne Street, San Francisco, CA 94105–3901.

Copies of the submitted requests are available for public inspection at EPA's Region IX office during normal business hours (docket number A–96–25).

FOR FURTHER INFORMATION CONTACT: Mae Wang, Rulemaking Office (AIR–4), Air Division, U.S. Environmental Protection Agency, Region IX, 75 Hawthorne Street, San Francisco, CA 94105–3901, Telephone: (415) 744–1200.

SUPPLEMENTARY INFORMATION: This document concerns delegation of unchanged NESHAPs to the Nevada Division of Environmental Protection and the Washoe County District Health Department. For further information, please see the information provided in the direct final action which is located in the Rules section of this **Federal Register**.

Authority: This action is issued under the authority of section 112 of the Clean Air Act, as amended, 42 U.S.C. 7412.

Dated: May 4, 1998.

Felicia Marcus,

Regional Administrator, Region IX.

[FR Doc. 98–13987 Filed 5–26–98; 8:45 am]

BILLING CODE 6560–50–P

ENVIRONMENTAL PROTECTION AGENCY

40 CFR Part 300

[FRL–6102–3]

National Oil and Hazardous Substances Contingency Plan; National Priorities List

AGENCY: Environmental Protection Agency (EPA).

ACTION: Notice of intent to delete the Novaco Industries Superfund site from the National Priorities List; request for comments.

SUMMARY: The United States Environmental Protection Agency (EPA) Region 5 announces its intent to delete the Novaco Industries Site from the National Priorities List (NPL) and requests public comment on this proposed action. The NPL constitutes Appendix B of 40 CFR part 300 which is the National Oil and Hazardous Substances Pollution Contingency Plan (NCP), which EPA promulgated pursuant to section 105 of the Comprehensive Environmental Response, Compensation, and Liability Act (CERCLA) of 1980, as amended. EPA and the Michigan Department of Environmental Quality (MDEQ) have determined that the Site no longer poses a significant threat to public health or the environment and, therefore, further remedial measures pursuant to CERCLA are not appropriate.

DATES: Comments concerning this Site may be submitted on or before June 26, 1998.

ADDRESSES: Comments may be mailed to: Russell D. Hart, U.S. EPA Region 5, Superfund Division, 77 West Jackson Boulevard, Mail Stop: SR–6J, Chicago, Illinois 60604. Comprehensive information on this Site is available through the administrative record which is available for viewing at the following locations:

U.S. EPA Records Center—Seventh Floor, 77 West Jackson Boulevard, Chicago, Illinois 60604.

Bedford Township Hall and Monroe County Library—Bedford Branch, Bedford, Michigan.

FOR FURTHER INFORMATION CONTACT: Russell D. Hart, U.S. EPA Region 5, Superfund Division, SR–6J Chicago, Illinois 60604, (312) 886–4844.

SUPPLEMENTARY INFORMATION:

Table of Contents

I. Introduction
II. NPL Deletion Criteria
III. Deletion Procedures
IV. Basis of Intended Site Deletion

I. Introduction

EPA Region 5 announces its intent to delete the Novaco Industries Site location in Temperance, Michigan from the NPL, Appendix B of the NCP, 40 CFR part 300, and requests comments on this deletion. EPA identifies sites that appear to present a significant risk to public health, welfare, or the environment and maintains the NPL as the list of these sites. As described in section 300.425(e)(3) of the NCP, sites deleted from the NPL remain eligible for remedial actions in the unlikely event that conditions at the site warrant such action.

EPA will accept comments on the proposal to delete this Site for thirty days after publication of this document in the **Federal Register**.

Section II of this document explains the criteria for deleting sites from the NPL. Section III discusses the procedures that EPA is using for this action. Section IV discusses the Novaco Industries Site and explains how the Site meets the deletion criteria.

II. NPL Deletion Criteria

Section 300.425(e) of the NCP provides that releases may be deleted from, or recategorized on the NPL where no further response is appropriate. In making a determination to delete a release from the NPL, EPA shall consider, in consultation with the State, whether any of the following criteria have been met:

(i) Responsible parties or other parties have implemented all appropriate response actions required;

(ii) All appropriate response under CERCLA has been implemented, and no further action by responsible parties is appropriate; or

(iii) The remedial investigation has shown that the release poses no significant threat to public health or the environment and, therefore, taking of remedial measures is not appropriate.

Even if a site is deleted from the NPL, where hazardous substances, pollutants, or contaminants remain at the site above levels that allow for unlimited use and unrestricted exposure, EPA's policy is that a subsequent review of the site will be conducted at least every five years after the initiation of the remedial action at the site to ensure that the site remains protective of public health and the environment. In the case of this Site, the selected remedy is protective of human health and the environment. The five year groundwater monitoring program required by the 1991 Record of Decision (ROD) Amendment has indicated that no hazardous substances or contaminants remain on site above

levels that allow for unlimited use or exposure. Therefore no five year review of this remedy is required. If new information becomes available which indicates a need for further action, EPA may initiate remedial actions. Whenever there is a significant release from a site deleted from the NPL, the site may be restored to the NPL without the application of the Hazardous Ranking System.

III. Deletion Procedures

The following procedures were used for the intended deletion of this Site: (1) EPA Region 5 issued a ROD in 1986 which called for groundwater extraction, on-site treatment of chromium contaminated groundwater, and discharge to Indian Creek; (2) EPA Region 5 amended the ROD in 1991 by requiring only additional monitoring well installation and a five year monitoring program to verify that no unacceptable levels of contaminants from the site remain in the groundwater; (3) based on the findings of that five year monitoring program the EPA Region 5 determined that no further response is appropriate for this site since during the monitoring program no exceedances occurred of either hexavalent chromium or total chromium drinking water Maximum Contaminant Limit (MCL) of 50 ug/l as established by the Safe Drinking Water Act; (4) MDEQ concurrence concerning Novaco Industries Site deletion was sought and obtained; (5) a notice has been published in the local newspaper and has been distributed to appropriate federal, state, and local officials and other interested parties announcing the commencement of a 30-day public comment period on EPA's Notice of Intent to Delete; and (6) all relevant documents, including a tabulation summary of all 1993–1997 sampling results have been made available for public review in the local Site information repositories.

Deletion of the Site from the NPL does not itself create, alter, or revoke any individual's rights or obligations. The NPL is designed primarily for informational purposes and to assist Agency management. As mentioned in section II of this document, section 300.425(e)(3) of the NCP states that the deletion of a site from the NPL does not preclude eligibility for future response actions.

For deletion of this Site, EPA's Regional office will accept and evaluate public comments on EPA's Notice of Intent to Delete before making a final decision to delete. If necessary, the Agency will prepare a Responsiveness Summary to address any significant public comments received.

A deletion occurs when the Regional Administrator places a final notice in the **Federal Register**. Generally, the NPL will reflect deletions in the final update following the document.

Public notices and copies of the Responsiveness summary will be made available to local residents by the Regional office.

IV. Basis for Intended Site Deletion

The following site summary provides the Agency's rational for the proposal to delete this Site from the NPL.

A. Site Background

The Novaco Industries site is located at 9411 Summerfield Road, at the intersection of Summerfield and Piehl in Temperance, Michigan. The site lies approximately 50 miles south of Detroit and 5 miles north of Toledo. The facility occupies a 2.6 acre parcel. The Novaco study area consists of Novaco Industries, the Veterans of Foreign Wars (VFW) Post #9656, and nearby residences having water supply wells screened within the sand/gravel aquifer or limestone aquifer which could be affected by the Novaco site.

B. History

The Novaco Industries site formerly performed tool and die manufacturing and repair. Approximately 85 residences and businesses are located within a half-mile of the site. Around 1979, a buried tank of chromic acid, used for plating purposes, developed a leak and an unknown quantity of acid leaked into the surrounding soils. By the early 1980s, chromium was detected at concentrations above both federal and state drinking water standards, in three water supply wells at Novaco Industries, the nearby VFW Post, and the Moyer's residence and one observation well. Novaco replaced the three water supply wells and extracted and treated contaminated groundwater in 1979. Following winter shutdown of the groundwater purge and treat system, Novaco never resumed its operation and declared bankruptcy.

The Novaco site was subsequently placed on the NPL in September 1983. While Novaco's short-term remedial operation did succeed in removing substantial amounts of contamination (approximately 400 pounds of hexavalent chromium), the remaining contamination continued to migrate. The Remedial Investigation (RI), performed by the EPA, identified a small area of contaminated groundwater with concentrations of chromium that exceeded relevant cleanup criteria. Based on these studies the EPA issued a Record of Decision (ROD) on June 27, 1986, which required the installation of a groundwater purge and on-site treatment system to remove the remaining contamination.

Design investigations conducted during spring 1988, determined that the previously defined nature and extent of groundwater contamination no longer held true at Novaco. Additional investigations were performed in the spring of 1989. Based on those studies, which indicated the concentrations of chromium contamination no longer exceeded relevant cleanup criteria, the EPA proposed to amend the existing ROD to a ''no action ROD'' with groundwater monitoring for five years and if the chromium concentrations remained below the cleanup criteria no further action would be warranted. The state concurred with this amended ROD. The EPA issued the amended ROD in September 1991. The groundwater monitoring network established during the RI was further developed and sampling for the five year program began in February 1993. During the first year samples were collected quarterly. Since the results of that sampling indicated all samples were below the detection limits stated in the quality assurance project plan the frequency of sampling was reduced to semi-annually. The five year program has been completed and indicated there are no chromium concentrations above relevant cleanup criteria. Therefore no further remedial action is needed.

EPA periodically sent summaries of analytical results to concerned residents.

EPA's ARCS contractor has completed the task of dismantling the groundwater monitoring network in accordance with procedures established by the Michigan Department of Environmental Quality. This work was accomplished in December 1997, and was in part overseen in the field by MDEQ representatives.

C. Characterization of Risk

Confirmational monitoring of groundwater conducted from 1993–1997 demonstrated that no significant risk to public health or the environment is posed by residual materials remaining at the Site. EPA and MDEQ believe that conditions at the site do not now pose unacceptable risks to human health or the environment.

One of the three criteria for deletion specifies that EPA may delete a site from the NPL if ''all appropriate response under CERCLA has been implemented, and no further action by responsible parties is appropriate.''

EPA, with the concurrence of MDEQ, believes that this criterion for deletion has been met. Subsequently, EPA is proposing deletion of this Site from the NPL. Documents supporting this action are available from the docket.

Dated: May 14, 1998.

David Ullrich,

Acting Regional Administrator, Region V.

[FR Doc. 98–13853 Filed 5–26–98; 8:45 am]

BILLING CODE 6560–50–P

DEPARTMENT OF THE INTERIOR

Fish and Wildlife Service

50 CFR Part 17

Endangered and Threatened Wildlife and Plants; 12-Month Finding for a Petition To List the Stone Mountain Fairy Shrimp as Endangered and Designate Critical Habitat

AGENCY: Fish and Wildlife Service, Interior.

ACTION: Notice of 12-month petition finding.

SUMMARY: The Fish and Wildlife Service (Service) announces a 12-month finding for a petition to list the Stone Mountain fairy shrimp (*Branchinella lithaca*) under the Endangered Species Act, as amended. After review of all available scientific and commercial information, the Service finds that listing this species is not warranted. The Service will continue to monitor the status of this species and its habitat.

DATES: The finding announced in this document was made on May 11, 1998.

ADDRESSES: Questions, comments, or information concerning this petition should be sent to the U.S. Fish and Wildlife Service, 6620 Southpoint Drive South, Suite 310, Jacksonville, Florida 32216. The petition finding, supporting data, and comments are available for public inspection, by appointment, during normal business hours at the above address.

FOR FURTHER INFORMATION CONTACT: Mr. John F. Milio (904/232–2580, ext. 112) (see **ADDRESSES** section).

SUPPLEMENTARY INFORMATION:

Background

Section 4(b)(3)(B) of the Endangered Species Act (Act) of 1973, as amended (16 U.S.C. 1531 *et seq.*), requires that, for any petition to list, delist, or reclassify a species that contains substantial scientific and commercial information, the Service make a finding within 12 months of receipt of the petition on whether the petitioned action is (a) not warranted; (b) warranted; or (c) warranted but precluded from immediate proposal by other pending proposals of higher priority. Such 12-month findings are to be published promptly in the **Federal Register**.

The processing of this petition conforms with the Service's listing priority guidance published in the **Federal Register** on December 5, 1996 (61 FR 64475), and extended on October 23, 1997, for fiscal year 1998 (62 FR 55268). Administrative findings for listing petitions that are not assigned to tier 1 (emergency listing actions) are processed as a tier 3 priority. The processing of this petition falls under tier 3. At this time, the Southeast Region has no pending tier 1 actions and has completed its pending tier 2 actions (resolving the status of outstanding proposed listings).

On March 31, 1995, the Service received a petition from Mr. Larry Winslett, President of the ''Friends of Georgia,'' Lithonia, Georgia. The petition, dated March 29, 1995, requested the Service to emergency list the Stone Mountain fairy shrimp, *Branchinella lithaca*, as endangered and designate critical habitat. The petitioner believed that previous and ongoing impacts to vernal (temporary) pool habitat at Stone Mountain, the shrimp's only known location, and potential physical and chemical effects from a then impending renovation project at the mountain's summit, threatened the survival of the species. The Service, in the 90-day finding, determined that the petition presented substantial information indicating that listing the species may be warranted. The finding concluded that an emergency listing action was not appropriate, and noted the Service would consider critical habitat designation if it found at 12 months that listing was warranted. A notice announcing the 90-day finding and initiation of a status review of the species was published in the **Federal Register** on July 22, 1997 (62 FR 39210).

The Service has reviewed the petition, the literature cited in the petition, other available literature and information, and consulted with species experts and other researchers familiar with vernal pool habitats. On the basis of the best scientific and commercial information available, the Service finds the petition is not warranted at this time. The status review documented habitat modifications such as disturbance of vernal pool sediments and physical debris entering pools at and near the mountain summit from recreational and construction activities, and facility operations. Solid wastes and liquid discharges may also directly impact the fairy shrimp. These modifications did not appear to occur at all pools or to an equal extent at affected pools. Due to this variability, lack of current and historic information on specific distribution and abundance of *B. lithaca*, and lack of historic data on the habitat, the Service is not able to confirm that these modifications, as well as other manmade or natural factors, threaten the continued existence of the Stone Mountain fairy shrimp.

The status review also did not reveal any threats to the species from disease or predation, or overutilization for commercial, recreational, scientific, or educational purposes. The Service does not believe that existing regulatory mechanisms are inadequate. Because of likely habitat overlap between the Stone Mountain fairy shrimp and two federally-listed plants, the black-spored quillwort (*Isoetes melanospora*) and little amphianthus (*Amphianthus pusillus*) at Stone Mountain, the Federal and State regulations that protect and conserve those plants and their vernal pools are also benefitting *B. lithaca*. In addition, special legislation passed in 1997 by the Georgia General Assembly promotes the continuation of protection and conservation for the designated natural district at State-owned Stone Mountain Park, as outlined in its current Master Plan (Alice Richards, Stone Mountain Memorial Association, *in litt.* 1998). Since Stone Mountain and its vernal pools all occur within the park's natural district, the Service believes that this legislation provides further protection for the Stone Mountain fairy shrimp and its habitat.

Casual surveys to locate *B. lithica* at Stone Mountain earlier this decade were unsuccessful. The last documented collection of the species was in 1951. At the 90-day finding the Service felt that a regular survey involving collection of water and sediment samples at various sites was needed to accurately determine the species' status. This survey was conducted in 1997 and also failed to find evidence of the species' continued existence at Stone Mountain, which may mean the species is extinct. Despite this latest failure (A. Richards, *in litt.* 1997, pers. comm. 1998, Denton Belk, The World Conservation Union, *in litt.* 1998), the erratic occurrence of some anostracans (Donald 1983) led Belk (*in litt.* 1998) to believe the species may still exist at Stone Mountain. There is also some potential that the species may exist at locations other than Stone Mountain (L. Winslett, Friends of Georgia, *in litt.* 1996). Within the Georgia Piedmont physiographic area there are other rock outcrops whose

invertebrate fauna has been little studied (J. Spooner, University of South Carolina, *in litt.* 1997), although quarrying and other human activities have destroyed or modified a number of these sites (L. Winslett, Friends of Georgia, *in litt.* 1996). The Service supports continued monitoring and protection of all temporary pools on Stone Mountain, and encourages systematic surveys of vernal pools at other rock outcrops, particularly those where the two federally-listed plants, black-spored quillwort and little amphianthus, are known to occur. The Stone Mountain Memorial Association (SMMA), manager of the natural district and all vernal pools within Stone Mountain Park, has fenced some habitat in response to a recovery plan recommendation for the listed plants (U.S. Fish and Wildlife Service 1993). The Friends of Georgia, Inc., with technical assistance from the Service, has prepared a conservation agreement that it hopes to finalize this year with the SMMA. The agreement stresses continued surveying for *B. lithaca;* additional site specific protection, conservation, and recovery actions; and public education.

The Service will continue to seek new information on the biology, ecology, distribution, and habitat of the Stone Mountain fairy shrimp, as well as threats to its continued survival. If additional data become available in the future to indicate that the species is extant, the Service will reassess the need for listing, including the need to emergency list.

References Cited

Donald, D.B. 1983. Erratic occurrence of anostracans in a temporary pond: colonization and extinction or adaptation to variations in annual weather? Can. J. Zool. 61:1492–1498.

U.S. Fish and Wildlife Service. 1993. Recovery plan for three granite outcrop plant species. Jackson, Mississippi. 41 pp.

Author

The primary author of this document is Mr. John F. Milio, Jacksonville Field Office (see **ADDRESSES** section).

Authority

The authority for this action is the Endangered Species Act (16 U.S.C. 1531 *et seq.*).

Dated: May 11, 1998.

Jamie Rappaport Clark,

Director, Fish and Wildlife Service.

[FR Doc. 98–13969 Filed 5–26–98; 8:45 am]

BILLING CODE 4310–55–P

Notices

Federal Register
Vol. 63, No. 101
Wednesday, May 27, 1998

This section of the FEDERAL REGISTER contains documents other than rules or proposed rules that are applicable to the public. Notices of hearings and investigations, committee meetings, agency decisions and rulings, delegations of authority, filing of petitions and applications and agency statements of organization and functions are examples of documents appearing in this section.

DEPARTMENT OF AGRICULTURE

Commodity Credit Corporation

Conservation Reservation Program

AGENCY: Commodity Credit Corporation, USDA.

ACTION: Solicitation of proposals for the Conservation Reserve Enhancement Program.

SUMMARY: The Commodity Credit Corporation (CCC) is publishing this notice to invite State governments to propose Conservation Reserve Enhancement Program (CREP) projects under the general Conservation Reserve Program, which is governed by regulations under 7 CFR Part 1410. CREP is an opportunity for the joining of resources of the Federal and State governments to address critical environmental issues such as soil erosion, water quality degradation and wildlife habitat loss associated with agricultural activities. This action is also part of the National Performance Review Initiative to deliver better service and foster partnership and community solutions.

ADDRESSES: Submission of CREP proposals by a State should be addressed to the Secretary of Agriculture, Attention: Deputy Administrator for Farm Programs, Farm Service Agency, STOP 0510, 1400 Independence Avenue, S.W., Washington, D.C. 20250–0510.

FOR FURTHER INFORMATION CONTACT: Caroline Roe, Environmental Program Specialist, Environmental Activities Branch, Farm Service Agency, Room 4715 South Agriculture Building, 1400 Independence Avenue, SW, Washington, D.C. 20250–0510, telephone (202) 720–6221, email at caroline__roe@wdc.fsa.usda.gov or contact the Conservation Program Specialist in the State Farm Service Agency (FSA) office.

SUPPLEMENTARY INFORMATION: The Conservation Reserve Program (CRP) is authorized by Title XII of the Food Security Act of 1985, as amended. The purpose of the CRP is to assist farmers and ranchers in conserving soil, water, and wildlife resources by converting highly erodible and other environmentally sensitive acreage normally devoted to the production of agricultural commodities and marginal pastureland to a long-term resource-conserving cover. CRP participants enroll in contracts for periods of 10- to 15-years in exchange for annual rental payments and cost-share assistance for installing those long-term resource-conserving practices. Up to 36.4 million acres are authorized to be enrolled in the CRP at any one time.

CCC enrolls land through periodic general signups in which CCC entertains offers from applicants seeking enrollment in the program. CCC evaluates the costs and benefits associated with each offer, its program goals, and any other related issues and accepts only those offers that provide the most cost-effective environmental benefits.

CCC also uses a continuous signup for certain highly valued environmental practices such as filter strips, riparian buffers, and grass waterways. Because of the significant environmental benefits to be obtained from the enrollment of these areas, CCC permits the enrollment of these acreages at any time at certain prescribed rental rates.

The ''Conservation Reserve Enhancement Program'' (CREP) is the name given to special joint undertakings between States and the Federal government using CRP contracts and payments to encourage enrollments and practices that may address particularly pressing environmental needs. CRP rules in 7 CFR Part 1410.50(b) provide explicitly for such agreements to further ''specific conservation and environmental objectives of that State and the nation.'' Some States have already submitted CREP proposals and CCC hereby further invites other interested States to do the same.

CREP creates an opportunity where the resources of a State government and CRP can be targeted in a coordinated manner to cost-effectively address specific conservation and environmental objectives of that State and the nation in order to improve water quality, erosion control, and wildlife habitat, including endangered species habitat, in specific geographic areas that have been adversely impacted by agricultural activities.

In order for a State's proposal to be considered for CREP, it should be directly related to mitigation of adverse agriculture-related environmental impacts and should document why program objectives cannot be met through other existing programs, in particular the general or continuous sign-ups under the CRP or other Department of Agriculture conservation programs.

Any proposed obligations beyond the term of any CRP contract, such as through long term agreements and/or permanent easements, would be between State government and the participant.

CCC encourages State governments to work closely with all interested groups within the State when developing options for obligations beyond the term of the CRP contract. It is CCC's experience that successful CREP agreements are the result of State governments, in preparing CREP proposals, working closely with all interested local parties including, but not limited to, farm, commodity, conservation, environmental, and landowner groups. Working with all interested local parties ensures the broad range of support needed for a successful CREP.

To ensure proper Federal/State cooperation, each proposal should specify the level of non-federal funding needed to fulfill objectives of the proposal. Normally, USDA expects that non-federal funding would be equal to at least 20 percent of the overall program-related costs of the CREP project. Examples of non-federal funding include, but are not limited to: funding of contract extensions or easements, cost-share assistance for conservation practices, and program monitoring costs. The CREP is anticipated to be initially limited to a maximum of 100,000 acres for each State, with possible expansion after the initial 100,000 acres are enrolled.

Submissions by a State should provide for a complete understanding of the proposal. To ensure consistency, each proposal should include: (1) an abstract; (2) a discussion of existing conditions; (3) an analysis of

agriculture-related adverse impacts; (4) project objectives; (5) project description; (6) proposals for the monitoring program; (7) a discussion of public support and ongoing public information that will accompany the project; (8) an analysis of the cost-effectiveness of the project; and (9) any additional documentation to ensure compliance with any other laws, including environmental laws. A description of each of these criteria follows.

Abstract

A single page summary of the project should be provided to include: project name; description of the project area; summary of existing conditions and agricultural impacts to be addressed; brief description of the project; total area of the project (including a list of the counties in which the project is located); and estimated cost of the project.

Existing Conditions

A synopsis of relevant existing conditions should be provided to include: a brief description of the importance to the community of the resource to be protected; a detailed map outlining the geographic area of the project; a description of the various human activities and land uses within the project boundary (including a summary of such information within each watershed); a summary of agricultural activities within the project boundary/watershed; and a brief description of relevant environmental factors (precipitation, soils, geology, vegetation patterns, wildlife, Federally listed endangered and threatened species, air quality, and water resources).

Analysis of Agriculture-Related Environmental Impacts

An analysis of agriculture-related environmental impacts to be addressed by the project should be provided to include: magnitude of agricultural impacts on the environment; past and projected trends in agricultural impacts, including any scientific data that demonstrates such trends; nature of any public health-related agricultural impacts; and past and ongoing efforts to address agricultural impacts through other Federal and State conservation programs, such as the CRP.

Project Objectives

A list of project objectives should be provided to include specific and measurable objectives in addition to any general objectives.

Project Description

The description of the project should include the following: summary of the project; conservation practices to be adopted; number of acres proposed to be included in the project; length of time for project implementation; analysis of both Federal and non-Federal costs (including a justification for special incentive payments to be made); and an analysis of the likelihood that project objectives will be achieved. The project description should also address such process and interagency coordination questions as: how applicant eligibility determinations will be made; which agency will provide technical assistance; how the application process will be coordinated among agencies; and how contract oversight will be conducted.

Monitoring Program

A comprehensive monitoring and evaluation plan should be provided to include: specific targets to be met in the accomplishment of project objectives; a description of the methods for collecting data to measure accomplishment of specific targets; the process for refinement of the project, if monitoring indicates that project objectives are not being met; and the identification of funding for the monitoring program. The proposal should identify the nature and funding sources for the preparation of annual reports to record and summarize the conclusions developed in the monitoring program.

Education, Outreach, and Public Support

A program for public participation should be presented that indicates: the level of public support for the proposal, among producers, conservation groups and other interested organizations, at the time the proposal is submitted; an analysis of the number of producers expected to enroll in the program; and the measures that will be taken for continued public involvement and education over the duration of the project.

Cost-Effectiveness Analysis

Proposals should include a cost-effectiveness analysis which compares the cost and likelihood of accomplishing project goals under the CREP proposal versus other State and Federal programs, such as the general and continuous signups under CRP.

Compliance With Other Laws

The application should include adequate information and documentation to demonstrate compliance with any applicable laws.

Each proposal should be developed in conjunction with the State FSA office and the USDA-established ''State Technical Committee.'' Following submittal to the Secretary of Agriculture, each proposal will be reviewed by an interagency team for consistency with overall program goals, magnitude of environmental benefits, likelihood that project benefits will be achieved and cost-effectiveness. The team is expected to make a recommendation for action to the Deputy Administrator within 60 days of receipt of a completed proposal. Further negotiation and discussion will follow as needed to implement the joint effort of the CCC and the State. To effectuate the joint agreement, a draft Memorandum of Agreement should be developed by the State based on discussions regarding the proposal. No agreement will be final until signed by authorized representatives of CCC and the State.

Signed at Washington, DC, on May 21, 1998.

Keith Kelly,

Executive Vice President, Commodity Credit Corporation

[FR Doc. 98–13980 Filed 5–21–98; 2:10 pm]

BILLING CODE 3410–05–P

DEPARTMENT OF AGRICULTURE

Food Safety and Inspection Service

[Docket No. 98–010N]

International Standard-Setting Activities

AGENCY: Food Safety and Inspection Service, USDA.

ACTION: Notice.

SUMMARY: This notice informs the public of the sanitary and phytosanitary standard-setting activities of the Codex Alimentarius Commission (Codex), in accordance with section 491 of the Trade Agreements Act of 1979, as amended, and the Uruguay Round Agreements Act, Pub. L. 103–465, 108 Stat. 4809, and seeks comments on standards currently under consideration and recommendations for new standards. It also lists other standard-setting activities of Codex, including commodity standards, guidelines, codes of practice, and revised texts. This notice covers the time periods from June 1, 1997, to May 31, 1998, and May 31, 1998, to June 1, 1999.

ADDRESSES: Submit written comments to: FSIS Docket Clerk, U.S. Department of Agriculture, Food Safety and Inspection Service, Room 102, Cotton

Annex, Washington, DC 20250–3700. Please state that your comments refer to Codex and, if your comments relate to specific Codex committees, please identify those committees in your comments and submit a copy of your comments to the delegate from that particular committee. All comments submitted will be available for public inspection in the Docket Clerk's Office between 8:30 a.m. and 4:30 p.m., Monday through Friday.

FOR FURTHER INFORMATION CONTACT: F. Edward Scarbrough, Ph.D., United States Manager for Codex Alimentarius, U.S. Department of Agriculture, Office of the Undersecretary for Food Safety, Room 4861, South Agriculture Building, 1400 Independence Avenue, SW, Washington, DC 20250–3700; (202) 205–7760. For information pertaining to particular committees, the delegate of that committee may be contacted. (A complete list of U.S. delegates and alternate delegates can be found in *Appendix 1* to this notice.)

SUPPLEMENTARY INFORMATION:

Background

The World Trade Organization (WTO) was established on January 1, 1995, as the common international institutional framework for the conduct of trade relations among its members in matters related to the Uruguay Round Trade Agreements. The WTO is the successor organization to the General Agreements on Tariffs and Trade (GATT). U.S. membership in the WTO was approved and the Uruguay Round Agreements Act was signed into law by the President on December 8, 1994. The Uruguay Round Agreements became effective, with respect to the United States, on January 1, 1995. Pursuant to section 491 of the Trade Agreements Act of 1979, as amended, the President is required to designate an agency to be responsible for informing the public of the sanitary and phytosanitary (SPS) standard-setting activities of each international standard-setting organization, Codex, International Office of Epizootics, and the International Plant Protection Convention. The President, pursuant to Proclamation No. 6780 of March 23, 1995 (60 FR 15845), designated the U.S. Department of Agriculture as the agency responsible for informing the public of sanitary and phytosanitary standard-setting activities of each international standard-setting organization. The Secretary of Agriculture has delegated to the Administrator, Food Safety and Inspection Service (FSIS), the responsibility to inform the public of the SPS standard-setting activities of Codex. The FSIS Administrator has, in turn, assigned the responsibility for informing the public of the SPS standard-setting activities of Codex to the Office of U.S. Codex Alimentarius, FSIS.

Codex was created in 1962 by two U.N. organizations, the Food and Agriculture Organization (FAO) and the World Health Organization (WHO). Codex is the principal international organization for encouraging fair international trade in food and protecting the health and economic interests of consumers. Through adoption of food standards, codes of practice, and other guidelines developed by its committees and by promoting their adoption and implementation by governments, Codex seeks to ensure that the world's food supply is sound, wholesome, free from adulteration, and correctly labeled. In the United States, the United States Department of Agriculture (USDA); the Food and Drug Administration (FDA), Department of Health and Human Services (HHS), and the Environmental Protection Agency (EPA) manage and carry out U.S. Codex activities.

As the agency responsible for informing the public of the sanitary and phytosanitary standard-setting activities of Codex, FSIS will publish this notice in the **Federal Register** annually, setting forth the following information:

1. The sanitary or phytosanitary standards under consideration or planned for consideration; and

2. For each sanitary or phytosanitary standard specified:

a. A description of the consideration or planned consideration of the standard;

b. Whether the United States is participating or plans to participate in the consideration of the standard;

c. The agenda for United States participation, if any; and

d. The agency responsible for representing the United States with respect to the standard.

TO OBTAIN COPIES OF THOSE STANDARDS LISTED IN THIS NOTICE THAT ARE UNDER CONSIDERATION BY CODEX, PLEASE CONTACT THE CODEX DELEGATE OR THE OFFICE OF U.S. CODEX ALIMENTARIUS. This notice also solicits public comment on those standards that are under consideration and on recommendations for new standards. The delegate, in conjunction with the responsible agency, will take the comments received into account in participating in the consideration of the standards and in proposing matters to be considered by Codex.

The United States' delegate will facilitate public participation in the United States Government's activities relating to Codex Alimentarius. The United States' delegate will maintain a list of individuals, groups, and organizations that have expressed an interest in the activities of the Codex committees and will disseminate information regarding United States' delegation activities to interested parties. This information will include the current status of each agenda item, the United States Government's position or preliminary position on the agenda items, and the time and place of planning meetings and debriefing meetings following Codex committee sessions. Please notify the appropriate U.S. delegate or the Office of U.S. Codex Alimentarius, Room 4861, South Agriculture Building, 1400 Independence Avenue, SW, Washington, DC 20250–3700, if you would like to receive information about specific committees.

The information provided below describes the status of Codex standard-setting activities by the Codex Committees for the two year period from June 1, 1997 to June 1, 1999. In addition, the following information is included with this **Federal Register** notice:

Appendix 1. List of U.S. Codex Officials (includes U.S. delegates and alternate delegates).
Appendix 2. Timetable of Codex Sessions (June 1997 through June 1999)
Appendix 3. Definitions for the Purpose of Codex Alimentarius
Appendix 4.
(A) Uniform Procedure for the Elaboration of Codex Standards and Related Texts
(B) Uniform Accelerated Procedure for the Elaboration of Codex Standards and Related Texts
Appendix 5. Nature of Codex Standards
Appendix 6. Lists of Standards and Related Texts Adopted by the 22nd Session of the Codex Alimentarius Commission, June 1997

F. Edward Scarbrough,

United States Manager for Codex Alimentarius.

Codex Alimentarius Commission and Executive Committee

The Codex Alimentarius Commission will hold its Twenty-third Session June 28–July 3, 1999 in Rome, Italy. At that time it will consider the standards, codes of practice, and related matters brought to its attention by the general subject committees, commodity committees, and member delegations.

Prior to the Commission meeting, the Executive Committee will meet in June

1998 and June 1999. It is composed of the chairperson, vice-chairpersons and six members elected from the Commission, one from each of the following geographic regions: Africa, Asia, Europe, Latin America and the Caribbean, North America, and South-West Pacific. At its session in June 1998, it will consider the following items:

- Budgetary and financial matters;
- Review of Codex Subsidiary Bodies;
- Consideration of the Draft Medium-Term Plan for 1998 to 2000;
- Implementation of the Commission's Programme of Work:
- Implementation of decisions taken by the 22nd Session of the Commission
- Consideration of new work proposals
- Consideration of Proposed Draft Standards and Related Texts at Step 5
- Matters arising from Codex Committees
- Report on Matters Relating to the Implementation of the WTO Agreement on the Application of Sanitary and Phytosanitary (SPS) Measures and the Agreement on Technical Barriers to Trade (TBT)

Responsible Agency: USDA/FSIS.

U.S. Participation: Yes.

Codex Committee on Residues of Veterinary Drugs in Foods

The Codex Committee on Residues of Veterinary Drugs determines priorities for the consideration of residues of veterinary drugs in foods and recommends Maximum Residue Limits (MRLs) for veterinary drugs. A Codex Maximum Limit for Residues of Veterinary Drugs (MRLVD) is the maximum concentration of residue resulting from the use of a veterinary drug (expressed in mg/kg or ug/kg on a fresh weight basis) that is recommended by the Codex Alimentarius Commission to be legally permitted or recognized as acceptable in or on a food.

An MRLVD is based on the type and amount of residue considered to be without any toxicological hazard for human health as expressed by the Acceptable Daily Intake (ADI)*, or on the basis of a temporary ADI that utilizes an additional safety factor. An MRLVD also takes into account other relevant public health risks as well as food technological aspects.

When establishing an MRLVD, consideration is also given to residues that occur in food of plant origin and/or the environment. Furthermore, the MRLVD may be reduced to be consistent with good practices in the use of veterinary drugs and to the extent that practical analytical methods are available.

* Acceptable Daily Intake (ADI): An estimate by the Joint FAO/WHO Expert Committee on Food Additives (JECFA) of the amount of a veterinary drug, expressed on a body weight basis, that can be ingested daily over a lifetime without appreciable health risk (standard man = 60 kg).

The next meeting of the Codex Committee on Residues of Veterinary Drugs in Foods will take place September 14–17, 1998, in Washington, DC. The following matters will be considered:

To be considered at Step 7:

Abamectin
Azaperone
Cetiofur
Chlorotetracycline/Oxtetracycline/Tetracycline
Cypermethrin
α=Cypermethrin
Dexamethasone
Diclazuril
Dihydrostreptomycin/Streptomycin
Febantel/Febendazole/Oxyfendazole
Gentamicin
Neomycin
Spectinomycin
Thiamphenicol
Tilmicosin

To be considered at Step 4:

- Clenbuterol.

New work:

- Porcine Somatotropin (PST).
- Draft Code of Practice on Good Animal Feeding.

In addition, the following matters will be discussed:

- Guidelines on Residues at Injection Sites;
- Methods of Analysis and Sampling; Review of Performance-based Criteria and Identification of Routine Methods;
- Risk Analysis in Codex and the Committee on Residues of Veterinary Drugs in Foods;
- Amendments to the Guidelines for the Establishment of a Regulatory Programme for Control of Veterinary Drug Residues in Foods—Residues of Veterinary Drugs in Milk and Milk Products;
- Harmonization of Technical Requirements for Registration of Veterinary Medicinal Products; and
- Maximum Residue Limits for Certain Veterinary Drugs in Foods (Priority List); and
- Data Requirements for the Establishment of Maximum Residue Limits for Veterinary Drugs for Minor Species.

Responsible Agency: HHS/FDA USDA/FSIS.

U.S. Participation: Yes.

Food Additives and Contaminants

The Codex Committee on Food Additives and Contaminants (CCFAC) establishes or endorses permitted maximum or guideline levels for individual food additives, contaminants, and naturally occurring toxicants in food and animal feed. The 30th Session of the CCFAC met March 9–13, 1998, in the Hague, The Netherlands. The 31st Session of the CCFAC is tentatively scheduled for March 22–26, 1999, in the Hague, The Netherlands. The following matters contained in ALINORMS 99/12 and 97/12A are under consideration by the CCFAC:

Food Additives

- Proposed Draft General Standard for Food Additives: Annex A (Guidelines for the Estimation of Appropriate Levels of Use of Food Additives) to be revised for consideration at Step 3; additives with specified conditions for use in specific food categories or foodstuffs (forwarded to Executive Committee at Step 5); (see Table 1, below).
- Specifications for the following food additives are recommended by the CCFAC for adoption by the Twenty-third Session of the Codex Commission: agar, alginic acid, ammonium alginate, calcium alginate, carbon dioxide, diacetyltartaric and fatty acid esters of glycerol, ethyl hydroxyethyl cellulose, gellan gum, hydrogenated poly-1-decene, isoamyl acetate, malitol syrup, microcrystalline wax, mixed carotenoids, modified starches, potassium alginate, potassium propionate, propylene glycol, propylene glycol alginate, propylene glycol esters of fatty acids, salatrim, sodium alginate, sucroglycerides, sulfur dioxide, and *tertiary*-butylhydroquinone.
- Specifications for the following flavouring agents are recommended by the CCFAC for adoption by the Twenty-third Session of the Codex Commission (numbers in parentheses are the Joint FAO/WHO Expert Committee on Food Additives (JECFA) flavour identification numbers): allyl cyclohexane propionate (13), ethyl octanoate (33), ethyl nonanoate (34), isoamyl acetate (43), isoamyl butyrate (45), isoamyl isobutyrate (49), isoamyl isovalerate (50), citronellyl formate (53), geranyl formate (54), neryl formate (55), rhodinyl formate (56), citronellyl acetate (57), neryl acetate (59), rhodinyl acetate (60), citronellyl propionate (61), geranyl propionate (62), cis-3,7-dimethyl-2,6-octadien-1-yl propionate (63), citronellyl butyrate (65), geranyl butyrate (66), neryl butyrate (67), rhodinyl butyrate (68), citronellyl isobutyrate (71), neryl isobutyrate (73), neryl isovalerate (76), formic acid (79), acetaldehyde (80), acetic acid (81), propyl alcohol (82), propionaldehyde

(83), propionic acid (84), butyl alcohol (85), butyraldehyde (86), butyric acid (87), amyl alcohol (88), valeraldehyde (89), valeric acid (90), hexyl alcohol (91), hexanal (92), hexanoic acid (93), heptyl alcohol (94), heptanal (95), heptanoic acid (96), 1-octanol (97), octanal (98), octanoic acid (99), nonyl alcohol (100), nonanal (101), nonanoic acid (102), 1-decanol (103), decanal (104), decanoic acid (105), undecyl alcohol (106), undecanal (107), undecanoic acid (108), lauryl alcohol (109), lauric aldehyde (110), lauric acid (111), myristaldehyde (112), myristic acid (113), 1-hexadecanol (114), palmitic acid (115), stearic acid (116), propyl formate (117), butyl formate (118), n-amyl formate (119), hexyl formate (120), octyl formate (122), cis-3-hexenyl formate (123), methyl acetate (125), propyl acetate (126), butyl acetate (127), hexyl acetate (128), heptyl acetate (129), octyl acetate (130), nonyl acetate (131), decyl acetate (132), lauryl acetate (133), cis-3-hexynl acetate (134), trans-3-heptynl acetate (135), 10-undecen-1-yl acetate (136), isobutyl acetate (137), 2-methylbutyl acetate (138), methyl propionate (141), propyl propionate (142), butyl propionate (143), hexyl propionate (144), octyl propionate (145), decyl propionate (146), cis-3 & trans-2-hexenyl propionate (147), isobutyl propionate (148), methyl butyrate (149), propyl butyrate (150), butyl butyrate (151), n-amyl butyrate (152), hexyl butyrate (153), cis-3-hexenyl butyrate (157), isobutyl butyrate (158), methyl valerate (159), butyl valerate (160) propyl hexanoate (161), butyl hexanoate (162), n-amyl hexanoate (163), hexyl hexanoate (164), isobutyl hexanoate (166), methyl heptanoate (167), n-amyl heptanoate (170), methyl octanoate (173), n-amyl octanoate (174), hexyl octanoate (175), methyl nonanoate (179), methyl laurate (180), butyl laurate (180), butyl laurate (181), methyl myristate (183), methyl isobutyrate (185), ethyl isobutyrate (186), propyl isobutyrate (187), butyl isobutyrate (188), hexyl isobutyrate (189), heptyl isobutyrate (190), trans-3-heptenyl 2-methyl propanoate (191), octyl isobutyrate (192), dodecyl isobutyrate (193), isobutyl isobutyrate (194), methyl isovalerate (195), ethyl isovalerate (196), propyl isovalerate (197), butyl isovalerate (198), hexyl 3-methylbutanoate (199), octyl isovalerate (200), nonyl isovalerate (201), 3-hexynl 3-methylbutanoate (202), 2-methylpropyl 3-methylbutyrate (203), methyl 2-methylbutyrate (205), ethyl 2-methylbutyrate (206), n-butyl 2-methylbutyrate (207), hexyl 2-methylbutanoate (208), octyl 2-methylbutyrate (209), 2-methylbutyl 2-methylbutyrate (212), ethyl 2-methyl pentanoate (214), methyl 4-methylvalerate (216), trans-anethole (217), and citric acid (218).

- Specifications for the following food additive is recommended by the CCFAC for adoption by the Twenty-third Session of the Codex Commission after changes considered editorial have been made: sodium propionate.
- Specifications for the following flavouring agents are recommended by the CCFAC for adoption by the Twenty-third Session of the Codex Commission after changes considered editorial have been made: geranyl acetate (58) and isobutyl formate (124).

Contaminants

- Methodology and Principles for Exposure Assessment in the Codex General Standard for Contaminants and Toxins in Food (paper to be revised for consideration at 31st CCFAC);
- Draft Maximum Levels and Sampling Plan for Aflatoxins in Raw Peanuts for Further Processing (forwarded to Codex Commission at Step 8);
- Draft Maximum Level for Aflatoxin M1 in milk (forwarded to Codex Commission at Step 8);
- Position Paper on Ochratoxin A (paper to be revised for consideration at 31st CCFAC);
- Position Paper on Patulin (paper to be revised for consideration at 31st CCFAC, and maximum level in apple juice and the apple juice ingredient in ready made soft drinks to be circulated for comment at Step 3);
- Position Paper on zearalenone to be circulated for comment and consideration at the 31st CCFAC;
- Draft Code of Practice for source directed measures to reduce contamination of foodstuffs (paper to be revised for consideration at 31st CCFAC);
- Draft Maximum Levels for Lead (revised levels to be circulated for comment and consideration at 31st CCFAC);
- Discussion Paper on Cadmium (paper to be revised and circulated for comment and consideration at 31st CCFAC);
- Position Paper on Arsenic (paper to be revised and circulated for comment and consideration at 31st CCFAC);
- Position Paper on Tin (draft maximum levels to be circulated for comment at Step 3 for further consideration at the 31st CCFAC).

The 30th CCFAC agreed to establish an ad hoc working group for contaminants to be chaired by Denmark. This ad hoc working group will meet prior to the plenary session of the 31st CCFAC.

Responsible Agency: HHS/FDA.

U.S. Participation: Yes.

Food Additives

For the purposes of Codex, a food additive means any substance not normally consumed as a food by itself and not normally used as a typical ingredient in the food, whether or not it has nutritive value, the intentional addition of which to food for a technological (including organoleptic) purpose in the manufacture, processing, preparation, treatment, packing, packaging, transport, or holding of such food results, or may be reasonably expected to result (directly or indirectly), in it or its by-products becoming a component of or otherwise affecting the characteristics of such foods. The food additive term does not include ''contaminants'' or substances added to food for maintaining or improving nutritional qualities.

The General Standard for Food Additives (GSFA) will set forth maximum levels of use of food additives in various foods and food categories. The maximum levels will be based on the food additive provisions of previously established Codex commodity standards, as well as on the use of the additives in non-standardized foods.

Only those food additives for which an acceptable daily intake (ADI) has been established by the Joint FAO/WHO Expert Committee on Food Additives (JECFA) are included in the general Standard for Food Additives (GSFA) at this time. All of the additives that are currently under consideration for inclusion in the draft GFSA are listed in Table 1 below. Provisions for the use of these additives are at Step 5 (See ALINORM 99/12).

Table 1

Acesulfame Potassium
Adipic Acid
Agar
Alitame
Allura Red AC
Alpha-Amylase & Glucoamylase (Aspergillus oryzae var.)
Alpha-Amylase (Aspergillus oryzae var.)
Alpha-Tocopherol
Aluminum Ammonium Sulphate
Amaranth
Ammonium Adipate
Ammonium Polyphosphates
Annatto Extracts (includes Bixin and Norbixin)
Anoxomer
Ascorbyl Palmitate
Ascorbyl Stearate
Aspartame

Azodicarbonamide
Azorubine
Beeswax, White and Yellow
Benzoic Acid
Benzoyl Peroxide
Beta-Apo-8′-Carotenic Acid, Methyl or Ethyl Ester
Beta-Apo-8′-Carotenal
Beta-Carotene (Synthetic)
Bone Phosphate
Brilliant Black PN
Brilliant Blue FCF
Brown HT
Butan-1,3-Diol
Butylated Hydroxyanisole (BHA)
Butylated Hydroxytoluene (BHT)
Calcium Benzoate
Calcium Dihydrogen Diphosphate
Calcium Disodium Ethylene Diamine Tetra Acetate
Calcium Ferrocyanide
Calcium Formate
Calcium Hydrogen Sulphite
Calcium Polyphosphates
Calcium Sorbate
Calcium Stearoyl Lactylate
Calcium Sulphite
Calcium Tartrate
Candellia Wax
Canthaxanthin
Caramel Colour, Class III—Ammonia Process
Caramel Colour, Class IV—Ammonia Sulphite Process
Carmines (including aluminum & calcium lakes of carminic acid)
Carnauba Wax
Carotenes, Natural Extracts (Vegetable)
Castor Oil
Chlorine
Chlorine Dioxide
Chlorophyllin Copper Complex, Sodium and Potassium Salts
Chlorophylls, Copper Complex
Choleic Acid
Curcumin
Cyclamic Acid (and Sodium, Potassium and Calcium Salts)
Cyclodextrin, Beta
Diacetyltartaric and Fatty Acid Esters of Glycerol
Diammonium Orthophosphate
Dicalcium Diphosphate
Dicalcium Orthophosphate
Dilauryl Thiodipropionate
Dimagnesium Diphosphate
Dimagnesium Orthophosphate
Dimethyl Dicarbonate
Dioctyl Sodium Sulfosuccinate
Diphenyl
Dipotassium Diphosphate
Dipotassium Orthophosphate
Dipotassium Tartrate
Disodium Diphosphate
Disodium Ethylene Diamine Tetra Acetate
Disodium Orthophosphate
Disodium Tartrate
Erythrosine
Ethyl Maltol
Ferric Ammonium Citrate
Ferrous Gluconate
Ferrous Lactate
Formic Acid
Glycerol Ester of Wood Rosin
Grape Skin Extract
Guiaiac Resin
Hexamethylene Tetramine
Hexane
Indigotine
Iron Carbonate
Iron Oxide, Black
Iron Oxide, Red
Iron Oxide, Yellow
Isoascorbic Acid (Erythorbic Acid)
Isomalitol
Isopropyl Citrates
Lysozyme Hydrochloride
Maltol
Methyl Ethyl Ether of Cellulose
Methyl p-Hydroxybenzoate
Microcrystalline Wax
Mineral Oil
Mineral Oil (High Viscosity)
Mineral Oil (Medium & Low Viscosity, Class I)
Mineral Oil (Medium & Low Viscosity, Classes II & III)
Mixed Tocopherals Concentrate
Monoammonium Orthophosphate
Monocalcium Orthophosphate
Monomagnesium Orthophosphate
Monopotassium Orthophosphate
Monopotassium Tartrate
Monosodium Orthophosphate
Monosodium Tartrate
Nisin
Nitrous Oxide
Ortho-Phenylphenols
Orthophosphoric Acid
Oxystearin
Pentapotassium Triphosphate
Pentapotassium Triphosphate
Pentasodium Triphosphate
Pimaricin (Natamycin)
Polydimethylsiloxane
Polyethylene Glycol
Polyglycerol Esters of Fatty Acids
Polyglycerol Esters of Interesterified Ricinoleic Acid
Polyoxyethylene (20) Sorbitan Monolaurate
Polyoxyethylene (20) Sorbitan Monooleate
Polyoxyethylene (20) Sorbitan Monopalmitate
Polyoxyethylene (20) Sorbitan Monostearate
Polyoxyethylene (20) Sorbitan Tristearate
Polyoxyethylene (40) Stearate
Polyoxyethylene (8) Stearate
Polyvinylpyrrolidone
Ponceau 4R
Potassium Adipate
Potassium Benzoate
Potassium Ferrocyanide
Potassium Metabisulphite
Potassium Nitrate
Potassium Nitrite
Potassium Polyphosphate
Potassium Silicate
Potassium Sodium Tartrate
Potassium Sorbate
Potassium Sulphite
Processed Eucheuma Seaweed
Propyl p-Hydroxybenzoate
Propylene Glycol Alginate
Propylene Glycol Esters of Fatty Acids
Protease (Aspergillus oryzae var.)
Quillaia Extract
Quinoline Yellow
Red 2G
Riboflavin
Riboflavin 5′-Phosphate
Saccharin
Saffron
Salts of Fatty Acids (with Base Ammonium, Calcium and Potassium Sodium)
Salts of Myristic, Palmitic and Stearic Acid (Calcium, Potassium and Sodium)
Shellac
Sodium Adipate
Sodium Aluminum Phosphate-Acidic
Sodium Aluminum Phosphate-Basic
Sodium Benzoate
Sodium Calcium Polyphosphate
Sodium Diacetate
Sodium Ethyl p-Hydroxybenzoate
Sodium Ferrocyanide
Sodium Formate
Sodium Hydrogen Sulphite
Sodium Isoascorbic Acid
Sodium Metabisulphite
Sodium Methyl p-Hydroxybenzoate
Sodium Sorbate
Sodium Stearoyl Lactylate
Sodium Sulphite
Sodium Thiosulphate
Sorbic Acid
Sorbitan Monolaurate
Sorbitan Monooleate
Sorbitan Monopalmitate
Sorbitan Monostearate
Sorbitan Trioleate
Sorbitan Tristearate
Stannous Chloride
Stearoyl-2-Lactylates
Stearyl Citrate
Stearyl Tartrate
Sucralose
Sucroglycerides
Sucrose Acetate Isobutyrate
Sucrose Esters of Fatty Acids
Sulphur Dioxide
Sunset Yellow FCF
Synthetic Delta-Tocopherol
Synthetic Gamma-Tocopherol
Tannic Acid (Tannins, Food Grade)
Tartaric Acid (L(+)−)
Tartrazine
Tertiary Butylhydroquinone (TBHQ)
Tetrapotassium Diphosphate
Tetrasodium Diphosphate
Thermally Oxidized Soya Bean Oil with Mono- and Di-Glycerides of Fatty

Acids (TOSOM)
Thiodipropionic Acid
Tricalcium Orthophosphate
Triethyl Citrate Triglycerine Lipase
Trimagnesium Orthophosphate
Tripotassium Orthophosphate
Trisodium Diphosphate
Trisodium Orthophosphate

Codex Committee on Pesticide Residues

The Codex Committee on Pesticide Residues recommends to the Codex Alimentarius Commission establishment of maximum limits for pesticide residues for specific food items or in groups of food. A Codex Maximum Limit for Pesticide Residues (MRLP) is the maximum concentration of a pesticide residue (expressed as mg/kg), recommended by the Codex Alimentarius Commission to be legally permitted in or on food commodities and animal feeds. Foods derived from commodities that comply with the respective MRLPs are intended to be toxicologically acceptable, that is, consideration of the various dietary residue intake estimates and determinations both at the national and international level in comparison with the ADI*, should indicate that foods complying with Codex MRLPs are safe for human consumption.

Codex MRLPs are primarily intended to apply in international trade and are derived from reviews conducted by the Joint Meeting on Pesticide Residues (JMPR) following:

(a) review of residue data from supervised trials and supervised uses including those reflecting national good agricultural practices (GAP). Data from supervised trials conducted at the highest nationally recommended, authorized, or registered uses are included in the review. In order to accommodate variations in national pest control requirements, Codex MRLPs take into account the higher levels shown to arise in such supervised trials, which are considered to represent effective pest control practices, and

(b) toxicological assessment of the pesticide and its residue.

MRLs recommended for advancement to step 5 by the 30th CCPR will be considered by the Executive Committee at its Forty-Fifth Session in June 1998 and those to Steps 5/8 and 8 by the 23rd Session of the Codex Alimentarius Commission in July 1999 (see table below). The Commission also will consider the Draft Revised Recommended Methods of Sampling for Determination of Pesticide Residues for Compliance with MRLs at Step 8.

* Acceptable Daily Intake (ADI) of a chemical is the daily intake which, during an entire lifetime, appears to be without appreciable risk to the health of the consumer on the basis of all the known facts at the time of the evaluation of the chemical by the Joint FAO/WHO Meeting on Pesticide Residues. It is expressed in milligrams of the chemical per kilogram of body weight.

Codex committee	Standard	Status of consideration	US participation/ agenda	Responsible agency
Pesticide Residues (considered at the 30th CCPR) (Annex II to ALINORMS 99/24).	Acephate	MRLs under consideration at Step 5/8	YES	EPA/ARS
	Aldicarb	MRLs at Step 5	YES	EPA/ARS
	Bifenthrin	MRLs under consideration at Step 8	YES	EPA/ARS
	Chlormequat	MRLs under consideration at Step 5	YES	EPA/ARS
	Chlorothalonil	CXL deletions	YES	EPA/ARS
	Chlorpyrifos	MRLs under consideration at Step 8 and CXL deletion.	YES	EPA/ARS
	DDT	EMRL under consideration at Step 5	YES	EPA/ARS
	Diazinon	MRLs under consideration at Steps 5 and 5/8	YES	EPA/ARS
	Diquat	MRLs under consideration at Step 8 and CXL deletions.	YES	EPA/ARS
	Dithiocabamates	MRLs under consideration at Step 5	YES	EPA/ARS
	Fenarimol	MRLs under consideration at Steps 5/2 and 8	YES	EPA/ARS
	Flumethrin	MRLs under consideration at Step 5/8	YES	EPA/ARS
	Haloxyfop	MRLs under consideration at Step 5	YES	EPA/ARS
	Methamidophos	MRLs under consideration at Steps 5 and 5/8	YES	EPA/ARS
	Methidathion	MRLs under consideration at Step 8 and CXL deletion.	YES	EPA/ARS
	Parathion-methyl	MRLs under consideration at Step 8 and CXL deletion.	YES	EPA/ARS
	Phenothrin	CXL deletion	YES	EPA/ARS
	Phorate	MRLs under consideration at Step 8	YES	EPA/ARS
	Proxpoxur	MRLs under consideration at Step 5/8 and CXL deletions.	YES	EPA/ARS
	Tefufenozide	MRLs under consideration at Steps 5 and 5/8	YES	EPA/ARS
	Teflubenzuron	MRLs under consideration at Step 5/8	YES	EPA/ARS

Codex Committee on Methods of Analysis and sampling

The Codex Committee on Methods of Analysis and Sampling:

(a) Defines the criteria appropriate to Codex Methods of Analysis and Sampling;

(b) Serves as a coordinating body for Codex with other international groups working in methods of analysis and sampling and quality assurance systems for laboratories;

(c) Specifies, on the basis of final recommendations submitted to it by the other bodies referred to in (b) above, Reference Methods of Analysis and Sampling appropriate to Codex Standards which are generally applicable to a number of foods;

(d) Considers, amends, if necessary, and endorses, as appropriate, methods of analysis and sampling proposed by Codex (Commodity) Committees, except that methods of analysis and sampling for residues of pesticides or veterinary drugs in food, the assessment of

microbiological quality and safety in food, and the assessment of specifications for food additives do not fall within the terms of reference of this Committee;

(e) Elaborates sampling plans and procedures, as may be required;

(f) Considers specific sampling and analysis problems submitted to it by the Commission or any of its Committees; and

(g) Defines procedures, protocols, guidelines or related texts for the assessment of food laboratory proficiency, as well as quality assurance systems for laboratories.

The following matters will be considered by the Committee at its next meeting in Budapest, Hungary on November 23–27, 1998:

- Proposed Draft Codex General Guidelines on Sampling;
- Criteria for Evaluating Acceptable Methods of Analysis for Codex purposes;
- Harmonization of Test Results Corrected for Recovery Factors;
- Report of Inter-Agency Meeting on ''limits'' Provisions in Codex Standards;
- Endorsement of Methods of Analysis for Codex; and
- Measurement Uncertainty.

New work approved by the 22nd Session of the Codex Alimentarius Commission:

- Intra-Laboratory Method Validation.

Responsible Agency: HHS/FDA USDA/AMS.

U.S. Participation: Yes.

Codex Committee on Food Import and Export Inspection and Certification Systems

The Codex Committee on Food Import and Export Certification and Inspection Systems is charged with developing principles and guidelines for food import and export inspection and certification systems. Additionally, the Committee develops principles and guidelines for the application of measures by competent authorities to provide assurance that foods comply with essential requirements. This encompasses work on equivalence of inspection systems, guidelines on food import control systems and food product certification and information exchange. The development of guidelines for the appropriate utilization of quality assurance systems to ensure that foodstuffs conform to requirements and to facilitate trade are also included in the Committee's terms of reference. Current work activities of the Committee are the following:

Draft guidelines to be considered at Step 5 by the Executive Committee at its Forty-fifth Session in July, 1998:

- Draft Guidelines for the Development of Equivalence Agreements Regarding Food Import and Export Inspection and Certification Systems

Continuing matters to be discussed at the Seventh Session of the Committee:

- Discussion Paper on Issues Relating to the Judgement of Equivalence; and
- Discussion Paper on the Development of Guidelines for the Utilization and Promotion of Quality Assurance Systems.

New work to be proposed to the Executive Committee:

- Development of Guidelines or a similar document on Food Import Control Systems;
- Development of Guidelines and Criteria for a Generic Official Certificate Format and Rules Relating to the Production and Issue of Certificates; and
- Discussion Paper on Guidelines for the Establishment of a Database on Importing Country Legislation.

Responsible Agency: HHS/FDA. USDA/FSIS.

U.S. Participation: Yes.

Codex Committee on General Principles

The Codex Committee on General Principles deals with rules and procedures referred to it by the Codex Alimentarius Commission. None of the following recommendations for changing the rules of procedure for Codex are in the Step Procedure. The following items will be considered at the next meeting of the Codex Committee on General Principles, which will take place in Paris, France, on September 7–11, 1998:

- Risk Analysis;
- Definitions related to Risk Management
- Working Priniciples for Risk Analysis
- Food Safety Objectives
- Measures Intended to Facilitate Consensus;
- Review of the General Principles of Codex;
- Consideration of special treatment of developing countries
- Revision of the Acceptance Procedure
- Review of the Status and Objectives of Codex Texts;
- Review of the Statements of Principle on the Role of Science and the Extent to Which Other Factors are Taken into Account—Application in the Case of BST and PST;
- Revision of the Procedural Manual;
- Procedures concerning the participation of INGOs
- Other aspects
- Review of the Code of Ethics for International Trade in Foods.

Responsible Agency: USDA/FSIS.

U.S. Participation: Yes.

Codex Committee on Food Labelling

The Codex Committee on Food Labelling is responsible for drafting provisions on labelling problems assigned by the Codex Alimentarius Commission. The following draft guidelines and standards were considered by the Committee at its May 1998 meeting.

The Committee is continuing work on:

- Proposed Draft Amendment to the Labelling Section of the Standard for Quick Frozen Fish Sticks (Fish Fingers), Fish Portions and Fish Fillets, Breaded or in Batter at Step 7;
- Draft Guidelines for Labelling Foods that can cause Hypersensitivity at Step 7;
- Draft Guidelines for Organically Produced Foods at Step 7;
- Proposed Draft Amendment to the General Labelling Standard (Biotechnology) at Step 4;
- Proposed Draft Recommendations for the Use of Health Claims at Step 4.

New work:

- Review of General Guidelines for Nutrition Labelling;
- Definition of the Claim ''Vegetarian;''
- ''Sports Drinks'' and ''Energy Drinks''

Responsible Agency: HHS/FDA. USDA/FSIS.

U.S. Participation: Yes.

Codex Committee on Food Hygiene

The Codex Committee on Food Hygiene drafts basic provisions on food hygiene for all foods. The term ''hygiene'' also includes, where applicable, microbiological specifications for food and associated methodology. The following Code of Hygienic Practice will be considered by the Codex Alimentarius Commission at its 23rd Session in June 1999:

- Draft Code of Practice for Refrigerated Packaged Foods with Extended Shelf-Life.

The following Guidelines and Codes of Hygienic Practice will be discussed at the Committee's next meeting in Washington, DC on October 26–30, 1998:

To be considered at Step 7:

- Proposed Draft Principles and Guidelines for the Conduct of Microbiological Risk Assessment; and
- Proposed Draft Code of Hygienic Practice for Packaged (Bottled) Drinking Waters (Other than Natural Mineral Water).

To be considered at Step 4 of the Accelerated Procedure:

• Proposed Draft Amendment to the General Principles of Food Hygiene (on the need for sufficient rinsing after chemical disinfection).

To be considered at Step 4:

• Proposed Draft Code of Hygienic Practice for the Transport of Foodstuffs in Bulk and Semi-Packaged Foodstuffs;

• Proposed Draft Recommendations for the control of *Listeria monocytogenes* in Foods in International Trade;

• Proposed Draft Code of Practice on Good Animal Feeding;

• Implications for the Broader Applications of the HACCP System;

• Broader Implications on the Application of Microbiological Risk Evaluation in International Foods and Feed Trade;

• Development of Risk-Based Guidance for the Use of HACCP-like Systems in Small Businesses, with Special References to Developing Countries; and

• Recommendations for the Management of Microbiological Hazards for Foods in International Trade.

Other committee work:

• Code of Hygienic Practice for Milk and Milk Products;

• Discussion paper on the Hygienic Recycling of Processing Water in Food Plants;

• Discussion paper on the Proposed Draft Code of Hygienic Practice for Primary Production, Harvesting and Packaging of Fresh Produce;

• Discussion paper on the Proposed Draft of Hygienic Practice for Pre-cut Fruits and Vegetables;

• Discussion paper on the Proposed Draft Annex on ''Cleaning and Disinfection'' to the Recommended International Code of Practice—General Principles of Food Hygiene;

• Comments and Information on Prioritization of the Revision of Codes of Hygienic Practice;

• Application of Risk Analysis Principles in Codex: Microbiological Hazards; and

• Revision of the Standard Wording for Food Hygiene Provisions, Section K of the Procedural Manual.

Responsible Agency: DOC/NMFS, HHS/FDA, USDA/FSIS.

U.S. Participation: Yes.

Codex Committee on Fresh Fruits and Vegetables

The Codex Committee on Fresh Fruits and Vegetables is responsible for elaborating world-wide standards and codes of practice for fresh fruits and vegetables. The following draft standards will be considered by the Codex Alimentarius Commission at its 23rd Session in June 1999. The draft standards listed below are contained in ALINORM 99/35.

To be considered at Step 8:

• Draft Standard for Chayote;

• Draft Standard for Lime;

• Draft Standard for Pummelo; and

• Draft Standard for Guava.

To be considered for adoption at Step 5/8 of the accelerated procedure:

• Draft Standard for Mexican Limes; and

• Draft Standard for Ginger.

To be considered at Step 5 by the Codex Executive Committee at its June 1998 meeting:

• Draft Revised Standard for Pineapple;

• Draft Standard for Asparagus;

• Draft Standard for Grapefruit;

• Draft Standard for Longan;

The committee is continuing work on:

• Draft Standard for Oranges, including guide for use in scoring freezing injury; and

• Draft Code of Practice for the Quality Inspection and Certification of Fresh Fruits and Vegetables.

Proposals to be forwarded to the Executive Committee for new work include Tiquisque (lilac and white), Yucca, Uchuva, Yellow Pitahaya and Papaya.

Responsible Agency: USDA/AMS.

U.S. Participation: Yes.

Codex Committee on Nutrition and Foods for Special Dietary Uses

The Codex Committee on Nutrition and Foods for Special Dietary Uses is responsible for studying nutritional problems referred by the Codex Alimentarius Commission. The Committee also drafts provisions on nutritional aspects for all foods and develops guidelines, general principles, and standards for foods for special dietary uses. The following draft standards and guidelines will be considered at the Committee's next meeting, September 21–25, 1998, in Berlin, Germany. The reference document for the following matters is ALINORM 97–26 and other documents as specifically noted.

To be considered at Step 7:

• Proposed Draft Revised Standards for Gluten-Free Foods; and

• Draft Table of Conditions for Nutrient Contents (Part B).

To be considered at Step 5:

• Proposed Draft Amendment to the Standard for Infant Formula (Vitamin B^{12} content)

To be considered at Step 4:

• Proposal Draft Guidelines for Vitamin and Mineral Supplements;

• Proposed Draft Revised Standard for Infant Formula (CL 1997/13–NFSDU); and

• Proposed Draft Revised Standards for Processed Cereal-Based Foods for Infants and Young Children.

The committee is continuing work on:

• Proposed Definitions for Vitamins and Minerals as Nutrient Reference Values for Labeling;

• Proposed Levels of Vitamins and Minerals in Foods for Special Medical Purposes (CL 1997/11–NFSDU);

• Dietary Modelling (CL 1997/12–NFSDU); and

• Nutrient Reference Values for Labelling Purposes (CL 1997/12–NFSDU).

Responsible Agency: HHS/FDA.

U.S. Participation: Yes.

Codex Committee on Fish and Fishery Products

The Fish and Fishery Products Committee is responsible for elaborating standards for fresh and frozen fish, crustaceans and mollusks. The following draft guidelines and codes of practice will be considered at the next meeting of the Committee, scheduled for June 8–12, 1998, in Bergen, Norway.

To be considered at Step 7:

• Proposed Draft Standard for Dried Salted Anchovies

• Proposed Draft Standard for Crackers from Marine and Freshwater Fish, Crustacean and Molluscan Shellfish

Guidelines to be considered at Step 7:

• Proposed Draft Guidelines for the Sensory Evaluation of Fish and Shellfish including a Proposed Draft Section on Training of Assessors at Step 3

Codes to be considered at Step 3:

• Proposed Draft Code of Practice for Fish and Fishery Products (Fresh Fish, Frozen Fish, Minced Fish, Canned Fish, Surimi, Salted Fish and Smoked Fish)

In addition, the Committee is working on the following proposed draft codes: (1) Products of Aquaculture; (2) Frozen Shrimps and Prawns; and (3) Molluscan Shellfish.

New work to be elaborated:

• Standard for Molluscan Shellfish

• Standard for Smoked Fish

• Standard for Salted Atlantic Herring

Responsible Agency: HHS/FDA USDC/NOAA/NMFS.

U.S. Participation: Yes.

Codex Committee on Milk and Milk Products

The Codex Committee on Milk and Milk Products is responsible for establishing international codes and standards for milk and milk products. The following revised standards and draft revised codes of principles were considered at the last meeting of the committee, May 18–22, 1998.

Considered at Step 7:

- Draft Revised Standard for Butter;
- Draft Revised Standard for Milkfat Products;
- Draft Revised Standard for Evaporated Milks;
- Draft Revised Standard for Sweetened Condensed Milk;
- Draft Revised Standard for Milk and Cream Powders;
- Draft Revised Standard for Cheese;
- Draft Revised Standard for Whey Cheese;
- Draft Revised Standard for Cheeses in Brine;
- Draft Code of Principles Concerning Milk and Milk Products (General Standard for the Labelling of Milk and Milk Products);
- Draft Standard for Unripened Cheese, including Fresh Cheese.

Considered at Step 4:

- Proposed Draft Revised Standard for Processed Cheese;
- Proposed Draft Revised Standard for Cream;
- Proposed Draft Revised Individual Standards for Cheese;
- Proposed Draft Revised Standard for Fermented Milk Products;
- Proposed Draft Standard for Dairy Spread; and
- Proposed Draft Standard for Mozzarella.

Other work:

- Model Export Certificate by the CCFICS;
- Nutrition and Quality Descriptors for Milk Products; and
- Heat Treatment Definitions.

New work:

- Proposal for new standard for ''Parmesan''

Responsible Agency: USDA/AMS, HHS/FDA.

U.S. Participation: Yes.

Codex Committee on Fats and Oils

The Codex Committee on Fats and Oils is responsible for elaborating standards for fats and oils of animal, vegetable, and marine origin. The reference document is ALINORM 97/17. The Fifteenth Session of the Committee recommended the following be adopted by the Commission in June 1997:

- Draft Standard for Named Animal Fats at Step 8;
- Draft Standard for Edible Fats and Oils Not Covered by Individual Standards at Step 8;
- Draft Revised Code of Practice for the Storage and Transport of Fats and Oils in Bulk at Step 8;

The 22nd Session of the Commission noted that there was controversy on the proposed peroxide value and provisions for additives in the Draft Standards and decided to return them to Step 6 for government comments and further consideration by the Committee. At the Commission meeting several delegates objected to adopting the Draft Revised Code of Practice because of a number of unaddressed issues. In addition, it noted that Thermal Heating Fluids were not generally allowed and this represented a serious problem to many exporting countries. The Commission decided to discontinue work on the revision and revoke the current Standard for Specified Vegetable Fat products and Specified Animal and Vegetable Fat products. The Commission agreed to discontinue work on converting the European Regional Standard for mayonnaise into a world-wide standard.

In addition to the two Draft Standards and the Draft Revised Code listed above, the Sixteenth Session of the Committee, tentatively scheduled for Spring 1999, will consider the following at Step 7:

- Draft Standard for Named Vegetable Oils; and
- Draft Standard for Olive Oils and Olive-Pomace Oils.

The Committee will also consider the Draft Standard for Fat Spreads and Blended Fat Spreads at Step 4.

Responsible Agency: HHS/FDA, USDA/ARS.

U.S. Participation: Yes.

Codex Committee on Cocoa Products and Chocolate

The Codex Committee on Cocoa Products and Chocolate held 15 sessions. The last meeting, at which the original program of work was completed, was held in 1982. The Committee elaborated world-wide standards for cocoa products and chocolate.

The Commission in 1991 decided to embark on a program of work to update and revise all of the standards.

The revisions were to include updating of the sections on food hygiene and food labeling and removal from the standards of all non-essential details. The standards, when updated and revised, should contain only those provisions that are necessary to protect consumer health and prevent fraud.

Provisions of an advisory nature reflecting quality factors and criteria typically used in trade to define or describe the quality of the product are to be removed from the standard. These guidance provisions are intended to assist users of the Codex standard when making international purchases and are, therefore, not subject to formal acceptance by users of the standard.

The 21st Session of the Commission endorsed the recommendation of the forty-second session of the Executive Committee to initiate the revision of the Cocoa Products and Chocolate Standards.

The Swiss Secretariat prepared updated versions of the Standards and requested government comments in CL 1995/28 CPC. The technical contents of the standards were not amended and comments were requested from governments on amendments.

The amended standards for chocolate and chocolate products were considered at Step 4 by the Sixteenth Session of the Committee, October 1996. The Committee returned the Proposed Draft Revised Standard for Chocolate and Chocolate Products to Step 3 for further consideration.

Proposed Draft Revised Standards for Cocoa Butter, Cocoa (Cacao) Nib, Cocoa (Cacao) Mass, Cocoa Press Cake and Cocoa Dust (Cocoa Fines) for use in the manufacture of Cocoa and Chocolate products, and for Cocoa Powders (Cacaos) and Dry Cocoa-Sugar Mixture will be considered at the Seventeenth Session of the Committee scheduled for the Fall of 1998.

Responsible Agency: HHS/FDA.

U.S. Participation: Yes.

Codex Committee on Processed fruits and vegetables

The United States-hosted Codex Committee on Processed Fruits and Vegetables (CCPFV) elaborated 37 standards for various types of processed fruits and vegetables, including many canned products (except juices), some dried products and other related products. The CCPFV held 18 sessions from 1964 through 1986 and then adjourned sine die. The CCPFV reconvened for its 19th session in March 1998 in order to consider, at Step 4, proposed draft revisions of the 37 existing Codex standards for processed fruits and vegetables. These proposed draft revisions were prepared and distributed in a circular letter in January 1997 in an effort to simplify the standards and thereby increase the likelihood of their use and acceptance by national governments.

During the 19th session, the Committee agreed in general with the principle of simplifying standards and, when practical, covering like products under a single standard. Due to time constraints, the meeting focused its discussions on a limited number of standards. The Committee also noted the status of the other standards and agreed on steps to consolidate certain standards and on recommendations for future work.

As a result of the 19th session, the status of work covered by the CCPFV is as follows:

- Draft Standard for Canned Bamboo Shoots at Step 7;
- Proposed Draft Revised Standard for Canned Applesauce at Step 5; and
- Proposed Draft Revised Standard for Canned Pears at Step 5.
- Proposed Draft Standards at Step 3:
- Canned Stone Fruits (*new work*);
- Canned Citrus Fruits;
- Canned Berry Fruits;
- Canned Mangoes;
- Canned Pineapple;
- Canned Fruit Cocktail;
- Canned Tropical Fruit Salad;
- Canned Chestnuts and Chestnut Puree;
- Canned Vegetables (*new work*)*;
- Canned Tomatoes;
- Canned Mushrooms;
- Jams, Jellies and Marmalades (*new work*);
- Mango Chutney**;
- Pickled Cucumbers (Cucumber Pickles);
- Table Olives;
- Processed Tomato Concentrates;
- Dried Apricots;
- Dates;
- Raisins;
- Grated Desiccated Coconut;
- Unshelled Pistachio Nuts;
- Dried Edible Fungi;
- Edible Fungi and Fungus Products;
- Soy Sauce (*new work*);
- Proposed Draft Guidelines for Packing Media in Canned Fruits (*new work*); and
- Proposed Draft Guidelines for Packing Media in Canned Vegetables (*new work*).

* The following products will be considered for inclusion into the proposed draft standards for canned vegetables: canned green beans and wax beans, canned sweet corn, canned asparagus, canned green peas, canned mature processed peas, canned carrots, canned palmito and possible canned tomatoes and canned mushrooms.

** In the future, mango chutney may be included in a general Codex standard for chutney.

There will be two additional standards forthcoming from the Codex Coordinating Committee for Asia, namely, the Proposed Draft Standard for Pickles and the Proposed Draft Standard for Kimchi. The Committee agreed to keep the Codex European Regional Standard for Vinegar, a regional standard, rather than consider it for worldwide status. The Committee also recommended that the European regional standard be referred to the Codex Coordinating Committee for Europe for updating into the current Codex format. In addition, the CCPFV agreed to recommend that any future work on converting the Codex European Regional Standard for Fresh Fungus Chanterelle into a worldwide standard be transferred to the Codex Committee for Fresh Fruits and Vegetables. The Committee also acknowledges that cherries may be considered for inclusion in the proposed draft standard for canned stone fruits and artichokes and potatoes may be considered for inclusion in the proposed draft standard for canned vegetables.

New work for the CCPFV is subject to approval by the Executive Committee at its next meeting.

The next session of the CCPFV is tentatively scheduled for March 20–24, 2000. The exact location and dates are to be decided between the U.S. and Codex Secretariat.

Responsible Agency: HHS/FDA USDA/AMS.

U.S. Participation: Yes.

Certain Codex Commodity Committees

Several Codex Alimentarius Commodity Committees have adjourned sine die. The following Committees fall into this category:

- *Cereals, Pulses and Legumes**

Responsible Agency: HHS/FDA, USDA/GIPSA

U.S. Participation: Yes

- *Meat Hygiene**

Responsible Agency: USDA/FSIS

U.S. Participation: Yes

- *Processed Meat and Poultry Products**

Responsible Agency: USDA/FSIS

U.S. Participation: Yes

- *Sugars*

Responsible Agency: HHS/FDA

U.S. Participation: Yes

- *Soups and Broths**

Responsible Agency: USDA/FSIS

U.S. Participation: Yes

- *Vegetable Proteins**

Responsible Agency: HHS/FDA, USDA/ARS

U.S. Participation: Yes

*There is no planned activity for these Committees in the next year.

A brief report on activities of the Codex Committees on Edible Ices, Soups and Broths, and Sugars follows:

Codex Committee on Edible Ices

The Committee on Edible Ices was responsible for elaborating standards for all types of edible ices, including mixes and powders used for their manufacture. The 43rd Session of the Executive Committee in June 1996 recommended that the Codex Standard for Edible Ices and Edible Ice Mixes be revoked. It was reported that there was no need for the standard as there was not a significant international trade. The Executive Committee further recommended that the Codex Committee on Edible Ices be abolished. The 22nd Session of the Codex Alimentarius Commission decided in June 1997 to revoke the standard and abolish the committee.

Codex Committee on Soups and Broths

The Codex Committee on Soups and Broths elaborated worldwide standards for soups, broths, bouillons and consommes. The committee adjourned *sine die.* The main tasks of the Committee were completed. However, at its June 1997 meeting, the Codex Alimentarius Commission requested that the Committee commence work revising the Standard for Bouillons and Consommes.

Responsible Agency: USDA/FSIS.

U.S. Participation: Yes.

Codex Committee on Sugars

The Codex Committee on Sugars elaborated standards for all types of sugars and sugar products. The Committee was adjourned *sine die,* but has been asked to revise the standards for Sugar and Honey. The Codex Alimentarius Commission at its 22nd Session returned the Draft Revised Standards for Sugar and Honey, which had been submitted for consideration at Step 8, to the Committee for a new round of comments.

Responsible Agency: HHS/FDA.

U.S. Participation: Yes.

Joint U.N.E.C.E. Codex Alimentarius Groups of Experts

Two groups of experts dealt with specific commodities much as the Codex Commodity Committees do. The Joint Groups of Experts have completed their main tasks and have adjourned. They could be called to meet again if the Codex Alimentarius Commission so decides. These Groups are:

- Standardization of Quick Frozen Foods; and
- Standardization of Fruit Juices.

There are no standards from either group being considered by the Twenty-third session of the Commission in June, 1999.

Responsible Agency: HHS/FDA.

U.S. Participation: Yes.

Codex Committee for Natural Mineral Waters

The Codex Committee for Natural Mineral Waters (CCNMW) is responsible for elaborating standards for natural mineral waters. The Codex Alimentarius Commission at its 22nd meeting approved the development of a standard for bottled/packaged water other than natural mineral waters. The United States prepared the initial proposed draft standard. The Committee will meet to discuss the draft in November 1998.

Responsible Agency: HHS/FDA.

U.S. Participation: Yes.

FAO/WHO Regional Coordinating Committees

The Codex Alimentarius Commission is made up of an Executive Committee, as well as approximately 25 subsidiary bodies. Included in these subsidiary bodies are several coordinating committees.

There are currently five Regional Coordinating Committees:

—Coordinating Committee for Africa
—Coordinating Committee for Asia
—Coordinating Committee for Europe
—Coordinating Committee for Latin America and the Caribbean
—Coordinating Committee for North America and the South-West Pacific

The United States participates as an active member of the Coordinating Committee for North America and the South-West Pacific, and is informed of the other coordinating committees through meeting documents, final reports, and representation at meetings.

Each regional committee:

—Defines the problems and needs of the region concerning food standards and food control;
—Promotes within the committee contacts for the mutual exchange of information on proposed regulatory initiatives and problems arising from food control and stimulates the strengthening of food control infrastructures;
—Recommends to the Commission the development of world-wide standards for products of interest to the region, including products considered by the committee to have an international market potential in the future; and
—Exercises a general coordinating role for the region and such other functions as may be entrusted to it by the Commission.

Codex Coordinating Committee for North America and the South-West Pacific

The Coordinating Committee is responsible for defining problems and needs concerning food standards and food control of all Codex member countries of the regions. The Fifth Session of the Committee is to be held October 6–9, 1998, in the United States. It will address the following matters of interest to the Commission:

• Report on Activities Related to Risk Analysis in Codex and Other Bodies;
• Review and Promotion of Acceptances of Codex Standards and Codex Maximum Residue Limits for Pesticides by Countries in the Region;
• Information and Reports on Food Safety, Food Control and Food Standards Issues in the Region;
• Promotion of Codex Activities in the Region; and
• Consumer Participation in Codex Work and Related Matters.

Agency Responsible: USDA/FSIS.

U.S. Participation: Yes.

Appendix 1—U.S. Codex Alimentarius Officials

Codex Committee Chairpersons

Mr. Steven N. Tanner, Director, Technical Services Division, Grain Inspection, Packers & Stockyards, Administration, U.S. Department of Agriculture, 10383 N. Executive Hills Blvd., Kansas City, MO 64153–1394, Phone #: (816) 891–0401, Fax #: (816) 891–0478—Cereals, Pulses and Legumes (adjourned Sine Die)

Dr. I. Kaye Wachsmuth, Deputy Administrator, Office of Public Health and Science, Food Safety and Inspection Service, U.S. Department of Agriculture, Room 341–E, Jamie L. Whitten Federal Building, 1400 Independence Avenue, SW., Washington, DC 20250–3700, Phone #≦(202) 720–2644, Fax # (202) 690–2980—Food Hygiene

Mr. David L. Priester, International Standards Coordinator, Fresh Products Branch, Fruit and Vegetable Programs, Agricultural Marketing Service, U.S. Department of Agriculture, P.O. Box 96456, Room 2069, South Agriculture Building, Washington, DC 20090–6456, Phone #: (202) 720–2184, Fax #: (202) 720–0016—Processed Fruits and Vegetables

Dr. Stephen F. Sundlof, Director, Center for Veterinary Medicine, Food and Drug Administration 7500 Standish Place (HFV–1), Rockville, MD 20855, Phone #: (301) 594–1740, Fax #: (301) 594–1830—Residues of Veterinary Drugs in Foods

LISTING OF U.S. DELEGATES AND ALTERNATE DELEGATES

[Worldwide General Subject Codex Committees]

Codex Committee on Residues of Veterinary Drugs in Foods (Host Government—United States)	
U.S. Delegate	Dr. Robert C. Livingston, Director, Office of New Animal, Drug Evaluation, Center for Veterinary Medicine (HFV–100), Food and Drug Administration, 7500 Standish Place, Rockville, MD 20855, Phone #: (301) 594–1620 Fax #: (301) 594–2297.
Alternate Delegate	Dr. Pat Basu, Director, Chemistry and Toxicology Division, Office of Public Health and Science, Food Safety and Inspection Service, U.S. Department of Agriculture, 6912 Franklin Court, 1099 14th Street, NW, Washington, DC 20250–3700, Phone #: (202) 501–7319, Fax: (202) 501–7639.

Codex Committee on Food Additives and Contaminants (Host Government—The Netherlands)	
U.S. Delegate	Dr. Alan Rulis, Director, Office of Premarket Approval, Center for Food Safety and Applied Nutrition, Food and Drug Administration, 200 C Street, SW, (HFS–200), Washington, DC 20204, Phone #: (202) 418–3100, Fax #: (202) 418–3131.
Alternate Delegate	Dr. Terry C. Troxell, Director, Division of Programs and Enforcement Policy, Center for Food Safety and Applied Nutrition, Food and Drug Administration 200 C Street, SW, (HFS–456), Washington, DC 20204, Phone #: (202) 205–5321, Fax #: (202) 205–4422.

LISTING OF U.S. DELEGATES AND ALTERNATE DELEGATES—Continued

[Worldwide General Subject Codex Committees]

Codex Committee on Pesticide Residues (Host Government—The Netherlands)	
U.S. Delegate	Mr. Fred Ives, Health Effects Division (7509C), Office of Pesticide Programs, U.S. Environmental Protection Agency 401 M Street, SW, Washington, DC 20460, Phone #: (703) 305–6378, Fax #: (703) 305–5147, E-mail: ives.fred@epamail.epa.gov.
Alternate Delegate	Dr. Richard Parry, Jr., Assistant Administrator, Cooperative Interactions, Agricultural Research Service, U.S. Department of Agriculture, Room 358–A, Jamie L. Whitten Federal Bldg., Washington, DC 20250–3700, Phone #: (202) 720–3973 Fax #: (202) 720–5427.
Codex Committee on Methods of Analysis and Sampling (Host Government—Hungary)	
U.S. Delegate	Dr. William Horwitz, Scientific Advisor, Center for Food Safety and Applied, Nutrition (HFS–500), Food and Drug Administration, Room 3832, 200 C Street, SW, Washington, DC 20204, Phone #: (202) 205–4346, Fax #: (202) 401–7740.
Alternate Delegate	Mr. William Franks, Director, Science and Technology Division, Agricultural Marketing Service, U.S. Department of Agriculture, Room 3507, South Agriculture Building, 1400 Independence Avenue, SW, Washington, DC 20250–3700, Phone #: (202) 720–5231, Fax #: (202) 720–6496.
Codex Committee on Food Import and Export Certification and Inspection Systems (Host Government—Australia)	
Delegate	VACANT.
Alternate Delegate	Mr. Mark Manis, Director, International Policy Development Division, Office of Policy, Program Development, and Evaluation, Food Safety and Inspection Service, U.S. Department of Agriculture, Room 4434, South Agriculture Building, 1400 Independence Avenue, SW, Washington, DC 20250–3700, Phone #: (202) 720–6400, Fax #: (202) 720–7990.
Codex Committee on General Principles (Host Government—France)	
Delegate	Note: A member of the Steering Committee heads the delegation to meetings of the General Principles Committee.
Codex Committee on Food Labelling (Host Government—Canada)	
Delegate	Ms. Elizabeth J. Campbell, Acting Director, Office of Food Labeling, Center for Food Safety and Applied Nutrition (HFS–150), Food and Drug Administration, 200 C Street, SW, Room 1832, Washington, DC 20204, Phone #: (202) 205–4561, Fax #: (202) 205–4594.
Alternate Delegate	Dr. Robert Post, Director, Labeling & Compounds Review Division, Office of Policy, Program Development, and Evaluation, Food Safety and Inspection Service, U.S. Department of Agriculture, Room 602, Cotton Annex, Washington, DC 20250–3700, Phone #: (202) 205–0279, Fax #: (202) 205–3625.
CODEX COMMITTEE ON FOOD HYGIENE (Host Government—United States)	
Acting Delegate	Mr. E. Spencer Garrett, Director, National Seafood Inspection Laboratory, National Marine Fisheries, 705 Convent Street, Pascagoulla, MS 39568–1207, Phone #: (601) 769–8964, Fax #: (601) 762–7144.
Alternate Delegate	VACANT.
Codex Committee on Nutrition and Foods for Special Dietary Uses (Host Government—Germany)	
Delegate	Dr. Elizabeth Yetley, Director, Office of Special Nutritionals, Center for Food Safety and Applied Nutrition, Food and Drug Administration, 200 C Street, SW (HFS–450), Washington, DC 20204, Phone #: (202) 205–4168, Fax #: (202) 205–5295.
Alternate Delegate	Dr. Robert J. Moore, Senior Regulatory Scientist, Center for Food Safety and Applied Nutrition, Food and Drug Administration, 200 C Street, SW (HFS–456), Washington, DC 20204, Phone #: (202) 205–4605, Fax #: (202) 260–8957.

LISTING OF U.S. DELEGATES AND ALTERNATE DELEGATES—Continued

[Worldwide General Subject Codex Committees]

Codex Committee on Fresh Fruits And Vegetables (Host Government—Mexico)	
Delegate	Mr. David L. Priester, International Standards Coordinator, Fresh Products Branch, Fruit and Vegetable Programs, Agricultural Marketing Service, U.S. Department of Agriculture, P.O. Box 96456, Room 2069, South Agriculture Building, Washington, DC 20090–6456, Phone #: (202) 720–2184, Fax #: (202) 720–0016.
Alternate Delegate	Mr. Larry B. Lace, Branch Chief, Fresh Products Branch, Fruits and Vegetable Division, Agricultural Marketing Service, U.S. Department of Agriculture, Room 2049, South Agriculture Building, 1400 Independence Avenue, SW, Washington, DC 20090–6456, Phone #: (202) 720–5870, Fax #: (202) 720–0393.
Codex Committee on Fish and Fishery Products (Host Government—Norway)	
Delegate	Mr. Philip C. Spiller, Director, Office of Seafood (HFS–400) VERB, Center for Food Safety and Applied Nutrition, Food and Drug Administration, 200 C Street, SW, Washington, DC 20204, Phone #: (202) 418–3133, Fax #: (202) 418–3198.
Alternate Delegate	Mr. Samuel W. McKeen, Director, Office of Trade and Industry Services, National Oceanic and Atmospheric Administration, NMFS, 1335 East-West Highway, Room 6490, Silver Spring, MD 20910, Phone #: (301) 713–2351, Fax #: (301) 713–1081.
Codex Committee on Milk and Milk Products (Host Government—New Zealand)	
Delegate	Mr. Duane Spomer, Chief, Dairy Standardization Branch, U.S. Department of Agriculture, Agricultural Marketing Service, Room 2750, South Agriculture Building, 1400 Independence Avenue, SW, Washington, DC 20250–0230, Phone #: (202) 720–9382, Fax #: (202) 720–2643.
Alternate Delegate	Mr. John C. Mowbray, Division of Programs and Enforcement Policy, Center for Food Safety and Applied Nutrition, Food and Drug Administration, 200 C Street, SW (HFS–306), Washington, DC 20204, Phone #: (202) 205–1731, Fax #: (202) 205–4422.
Codex Committee on Fats and Oils (Host Government—United Kingdom)	
Delegate	Mr. Charles W. Cooper, Director, International Activities Staff, Center for Food Safety and Applied Nutrition, Food and Drug Administration, 200 C Street, SW, Room 5823 (HFS–585), Washington, DC 20204, Phone #: (202) 205–5042, Fax #: (202) 401–7739.
Alternate Delegate	Dr. Dwayne Buxton, National Program Leader for Oilseeds and Bioscience, Agricultural Research Service, Room 212, Building 005, BARC West, Beltsville, MD 20705, Phone #: (301) 504–5321, Fax #: (301) 504–5467.
Codex Committee on Processed Fruits and Vegetables (Host Government—United States)	
Delegate	Mr. Richard B. Boyd, Senior Marketing Specialist, Fruit and Vegetable Division, Agriculture Marketing Service, U.S. Department of Agriculture, Room 0717, South Agriculture Building, 1400 Independence Avenue, SW, Washington, DC 20090–0247, Phone #: (202) 720–5021, Fax #: (202) 690–1527.
Alternate Delegate	Mr. Charles W. Cooper, Director, International Activities Staff, Center for Food Safety and Applied Nutrition, Food and Drug Administration, 200 C Street, SW, Room 5823 (HFS–585), Washington, DC 20204, Phone #: (202) 205–5042, Fax #: (202) 401–7739.
Codex Committee on Cocoa Products and Chocolate (Host Government—Switzerland)	
U.S. Delegate	Mr. Charles W. Cooper, Director, International Activities Staff, Center for Food Safety and Applied Nutrition, Food and Drug Administration, 200 C Street, SW, Room 5823 (HFS–585), Washington, DC 20204, Phone #: (202) 205–5042, Fax #: (202) 401–7739.
Alternate Delegate	Dr. Michelle Smith, Food Technologist, Office of Food Labeling, Center for Food Safety and Applied Nutrition (HFS–158), 200 C Street, SW, Washington, DC 20204, Phone #: (202) 205–5099, Fax #: (202) 205–4594.

LISTING OF U.S. DELEGATES AND ALTERNATE DELEGATES—Continued

[Worldwide General Subject Codex Committees]

Codex Committee on Natural Mineral Waters (Host Government—Switzerland)	
Delegate	Dr. Terry C. Troxell, Director, Division of Programs and Enforcement Policy, Center for Food Safety and Applied Nutrition, Food and Drug Administration, 200 C Street, SW (HFS–305), Washington, DC 20204, Phone #: (202) 205–5321, Fax #: (202) 205–4422.
Alternate Delegate	Ms. Shellee Davis, Division of Programs and Enforcement Policy, Center for Food Safety and Applied Nutrition, Food and Drug Administration, 200 C Street, SW (HFS–306), Washington, DC 20204, Phone #: (202) 205–4681, Fax #: (202) 205–4422.
Codex Committee On Sugars (Host Government—United Kingdom)	
Delegate	VACANT.
Alternate Delegate	Dennis M. Keefe, Office of Premarket Approval Center for Food Safety and Applied Nutrition, Food and Drug Administration 200 C Street, SW (HFS–206), Washington, DC 20204, Phone #: (202) 418–3113, Fax #: (202) 418–3131.
Codex Committee on Cereals, Pulses And Legumes [1] (Host Government—United States)	
Delegate	Mr. Charles W. Cooper, Director, International Activities Staff, Center for Food Safety and Applied Nutrition, Room 5823 (HFS–585), Food and Drug Administration, 200 C Street, SW, Washington, DC 20204, Phone #: (202) 205–5042, Fax #: (202) 401–7739.
Alternate Delegate	Mr. David Shipman, Deputy Administrator, Grain Inspection Packers and Stockyards Administration, U.S. Department of Agriculture, Room 1092, South Agriculture Building, 1400 Independence Avenue, SW, Washington, DC 20250–3601, Phone #: (202) 720–9170, Fax #: (202) 720–1015.
Codex Committee on Soups and broths [1] (Host Government—Switzerland)	
Delegate	Mr. Charles Edwards, Director, Labeling, Products and Technology Standards Division, Office of Policy, Program Development and Evaluation, Food Safety and Inspection Service, U.S. Department of Agriculture, Room 405, Cotton Annex, 300 C Street, SW, Washington, DC 20250–3700, Phone #: (202) 205–0675, Fax #: (202) 205–0080.
Alternate Delegate	Dr. Robert Post, Director, Labeling and Compounds Review Division, Office of Policy, Program Development and Evaluation, Food Safety and Inspection Service, U.S. Department of Agriculture, Room 602, Cotton Annex, 300 C Street, SW, Washington, DC 20250–3700, Phone #: (202) 205–0279, Fax #: (202) 205–3625.
Codedx Committee on Vegetable proteins[1] (Host Government—Canada)	
U.S. Delegate	Dr. Wilda H. Martinez, Associate Deputy Administrator, Aqua Products and Human Nutrition, Sciences, U.S. Department of Agriculture, Agricultural Research Service, Room 107, B–005, Beltsville, MD 20705, Phone #: (301) 504–6275, Fax #: (301) 504–6699.
Alternate Delegate	Ms. Elizabeth J. Campbell, Acting Director, Office of Food Labeling, Center for Food Safety and Applied Nutrition, Food and Drug Administration, 200 C Street, SW (HFS–150), Washington, DC 20204, Phone #: (202) 205–4561, Fax #: (202) 205–4594,
Codex Committee on Meat Hygiene [1] (Host Government—New Zealand)	
Delegate	Dr. John Prucha, Assistant Deputy Administrator, International and Domestic Policy, Food Safety and Inspection Service, U.S. Department of Agriculture, Room 4866, South Agriculture Building, Washington, DC 20250–3700, Phone #: (202) 720–3473, Fax #: (202) 690–3856.
Alternate Delegate	Vacant.
Codex Committee on Processed Meat and Poultry Products [1] (Host Government—Denmark)	
U.S. Delegate	Mr. Daniel Engeljohn, Branch Chief, Standards Development Branch, Inspection Systems Development Division, Office of Policy, Program Development and Evaluation, Food Safety and Inspection Service, U.S. Department of Agriculture, Room 405, Cotton Annex, 300 C Street, SW, Washington, DC 20250–3700, Phone #: (202) 205–0210, Fax #: (202) 205–0080.

LISTING OF U.S. DELEGATES AND ALTERNATE DELEGATES—Continued

[Worldwide General Subject Codex Committees]

Alternate Delegate	Mr. Charles Edwards, Director, Labeling, Products and Technology Standards Division, Office of Policy, Program Development and Evaluation, Food Safety and Inspection Service, U.S. Department of Agriculture, Room 405, Cotton Annex, 300 C Street, SW, Washington, DC 20250–3700, Phone #: (202) 205–0675, Fax #: (202) 205–0080.
Joint U.N.E.C.E. Codex Alimentarius Groups of Experts Joint ECE/Codex Alimentarius Group of Experts on Standardization of Quick Frozen Foods [1]	
U.S. Delegate	Mr. Richard B. Boyd, Senior Marketing Specialist, Fruit and Vegetable Division, Agricultural Marketing Service, U.S. Department of Agriculture, Room 0717, South Agriculture Building, 1400 Independence Avenue, SW, Washington, DC 20090–0247, Phone #: (202) 720–5021, Fax #: (202) 690–1527.
1Alternate Delegate	Mr. Charles W. Cooper, Director, International Activities Staff, Center for Food Safety and Applied Nutrition, Room 5823 (HFS–585), Food and Drug Administration, 200 C Street, SW, Washington, DC 20204, Phone #: (202) 205–5042, Fax #: (202) 401–7739.
Joint ECE/Codex Alimentarius Group of Experts on Standardization of Fruit Juices [1]	
U.S. Delegate	Mr. Charles W. Cooper, Director, International Activities Staff, Center for Food Safety and Applied Nutrition, Room 5823 (HFS–585), Food and Drug Administration, 200 C Street, SW, Washington, DC 20204, Phone #: (202) 205–5042, Fax #: (202) 401–7739.
Alternate Delegate	Mr. Richard B. Boyd, Senior Marketing Specialist, Fruit and Vegetable Division, Agricultural Marketing Service, U.S. Department of Agriculture, Room 0717, Agriculture South Building, 1400 Independence Avenue, SW, Washington, DC 20090–0247, Phone #: (202) 720–5021, Fax #: (202) 690–1527.
Subsidiary Bodies of the Codex Alimentarius	
There are five regional coordinating committees: Coordinating Committee for Africa Coordinating Committee for Asia Coordinating Committee for Europe Coordinating Committee for Latin America and the Caribbean, and Coordinating Committee for North America and the South-West Pacific	
Contact	Mr. Patrick Clerkin, Director, U.S. Codex Office, Food Safety and Inspection Service, U.S. Department of Agriculture, Room 4861, South Agriculture Building, 1400 Independence Avenue, SW, Washington, DC 20250–3700, Phone #: (202) 205–7760, Fax #: (202) 720–3157.

[1] Adjourned sine die. The main tasks of these Committees are completed. However, the committees may be called to meet again if required.

Appendix 2—Timetable of Codex Sessions

(June 1997 Through June 1999)

1997:			
CX 702–44	Executive Committee of the Codex Alimentarius Commission (44th Session)	19–20 June	Geneva.
CX 701–22	CODEX ALIMENTARIUS COMMISSION (44th Session)	23–28 June	Geneva.
CX 731–7	Codex Committee on Fresh Fruits and Vegetables (7th Session)	8–12 September	Mexico City.
CX 712–30	Codex Committee on Food Hygiene (30th Session)	20–24 October	Washington, DC.
CX 727–11	Codex Regional Coordinating Committee for Asia (11th Session)	16–19 December	Chiang Rai.
1998:			
CX 733–6	Codex Committee on Food Import and Export Certification and Inspection (6th Session).	23–27 February	Melbourne.
CX 711–30	Codex Committee on Food Additives and Contaminants (30th Session)	9–13 March	The Hague.
CX 713–20	Codex Committee on Processed Fruits and Vegetables (19th Session)	16–20 March	Washington, DC.
CX 718–30	Codex Committee on Pesticide Residues (30th Session)	20–25 April	The Hague.
CX 719–21	Codex Regional Coordinating Committee for Europe (21st Session)	5–8 May	Madrid.
CX 703–3	Codex Committee on Milk and Milk Products (3rd Session)	18–22 May	Montevideo.
CX 714–26	Codex Committee on Food Labelling (26th Session)	25–29 May	Ottawa.
CX 702–45	Executive Committee of the Codex Alimentarius Commission (45th Session)	3–5 June	Rome.
CX 722–23	Codex Committee on Fish and Fishery Products (23rd Session)	8–12 June	Bergen.
CX 716–13	Codex Committee on General Principals (13th Session)	7–11 September	Paris.
CX 730–11	Codex Committee on Residues of Veterinary Drugs in Foods (11th Session)	14–17 September	Washington, DC.
CX 720–21	Codex Committee on Nutrition and Foods for Special Dietary Uses (21st Session).	21–25 September	Berlin.
CX 732–5	Codex Regional Coordinating Committee for North America and the South-West Pacific (5th Session).	6–9 October	TBA.

CX 712–31	Codex Committee on Food Hygiene (31st Session)	26–30 October	Washington, DC.
CX 707–13	Codex Regional Coordinating Committee for Africa (13th Session)	3–6 November	Harare.
CX 708–17	Codex Committee on Cocoa Products and Chocolate (17th Session)	16–18 November	Switzerland.
CX 719–6	Codex Committee on Natural Mineral Waters (6th Session)	19–21 November	Switzerland.
CX 715–22	Codex Committee on Methods of Analysis and Sampling (22nd Session)	23–27 November	Budapest.
CX 725–11	Codex Regional Coordinating Committee for Latin America and the Caribbean (11th Session).	8–11 December	Montevideo.
1999:			
CX 733–7	Codex Committee on Food Import and Export Certification and Inspection (7th Session).	22–26 February	TBA.
CX 731–8	Codex Committee on Fresh Fruits and Vegetables (8th Session)	1–5 March	Mexico City.
CX 709–16	Codex Committee on Fats and Oils (16th Session)	8–12 March	London.
CX 711–31	Codex Committee on Food Additives and Contaminants (31st Session)	22–26 March	The Hague.
CX 718–31	Codex Committee on Pesticide Residues (31st Session)	12–17 April	The Hague.
CX 714–27	Codex Committee on Food Labelling (27th Session)	19–23 April	Ottawa.
CX 716–13	Codex Committee on General Principles (14th Session)	26–30 April	Paris.
CX 702–46	Executive Committee of the Codex Alimentarius Commission (46th Session)	24–25 June	Rome.
CX 701–23	Codex Alimentarius Commission (23rd Session)	28 June–3 July	Rome.

Appendix 3—Definitions for the Purpose of Codex Alimentarius

Words and phrases have specific meanings when used by the Codex Alimentarius. For the purposes of Codex, the following definitions apply:

1. *Food* means any substance, whether processed, semi-processed or raw, which is intended for human consumption, and includes drink, chewing gum, and any substance which has been used in the manufacture, preparation or treatment of ''food'' but does not include cosmetics or tobacco or substances used only as drugs.

2. *Food hygiene* comprises conditions and measures necessary for the production, processing, storage and distribution of food designed to ensure a safe, sound, wholesome product fit for human consumption.

3. *Food additive* means any substance not normally consumed as a food by itself and not normally used as a typical ingredient of the food, whether or not it has nutritive value, the intentional addition of which to food for a technological (including organoleptic) purpose in the manufacture, processing, preparation, treatment, packing, packaging, transport, or holding of such food results, or may be reasonably expected to result, (directly or indirectly) in it or its by-products becoming a component of or otherwise affecting the characteristics of such foods. The food additive term does not include ''contaminants'' or substances added to food for maintaining or improving nutritional qualities.

4. *Contaminant* means any substance not intentionally added to food, which is present in such food as a result of the production (including operations carried out in crop husbandry, animal husbandry, and veterinary medicine), manufacture, processing, preparation, treatment, packing, packaging, transport or holding of such food or as a result of environmental contamination. The term does not include insect fragments, rodent hairs and other extraneous matters.

5. *Pesticide* means any substance intended for preventing, destroying, attracting, repelling, or controlling any pest including unwanted species of plants or animals during the production, storage, transport, distribution and processing of food, agricultural commodities, or animal feeds or which may be administered to animals for the control of ectoparasites. The term includes substances intended for use as a plant-growth regulator, defoliant, desiccant, fruit thinning agent, or sprouting inhibitor and substances applied to crops either before or after harvest to protect the commodity from deterioration during storage and transport. The term pesticides excludes fertilizers, plant and animal nutrients, food additives, and animal drugs.

6. *Pesticide residue* means any specified substance in food, agricultural commodities, or animal feed resulting from the use of a pesticide. The term includes any derivatives of a pesticide, such as conversion products, metabolites, reaction products, and impurities considered to be of toxological significance.

7. *Good Agricultural Practice in the Use of Pesticides (GAP)* includes the nationally authorized safe uses of pesticides under actual conditions necessary for effective and reliable pest control. It encompasses a range of levels of pesticide applications up to the highest authorized use, applied in a manner which leaves a residue which is the smallest amount practicable.

Authorized safe uses are determined at the national level and include nationally registered or recommended uses, which take into account public and occupational health and environmental safety considerations.

Actual conditions include any stage in the production, storage, transport, distribution and processing of food commodities and animal feed.

8. *Codex Maximum Limit for Pesticide Residues (MRLP)* is the maximum concentration of a pesticide residue (expressed as mg/kg), recommended by the Codex Alimentarius Commission to be legally permitted in or on food commodities and animal feeds. MRLPs are based on their toxological affects and on GAP data and foods derived from commodities that comply with the respective MRLPs are intended to be toxologically acceptable.

Codex MRLPs, which are primarily intended to apply in international trade, are derived from reviews conducted by the JMPR following:

(a) toxological assessment of the pesticide and its residue, and

(b) review of residue data from supervised trials and supervised uses including those reflecting national good agricultural practices. Data from supervised trials conducted at the highest nationally recommended, authorized, or registered uses are included in the review. In order to accommodate variations in national pest control requirements, Codex MRLPs take into account the higher levels shown to arise in such supervised trials, which are considered to represent effective pest control practices.

Consideration of the various dietary residue intake estimates and determinations both at the national and international level in comparison with the ADI, should indicate that foods complying with Codex MRLPs are safe for human consumption.

9. *Veterinary Drug* means any substance applied or administered to any food-producing animal, such as meat or milk-producing animals, poultry, fish or bees, whether used for therapeutic, prophylactic or diagnostic purposes or for modification of physiological functions or behavior.

10. *Residues of Veterinary Drugs* include the parent compounds and/or their metabolites in any edible portion of the animal product, and include residues of associated impurities of the veterinary drug concerned.

11. *Codex Maximum Limit for Residues of Veterinary Drugs (MRLVD)* is the maximum concentration of residue resulting from the use of a veterinary drug (expressed in mg/kg or μg/kg on a fresh weight basis) that is recommended by the Codex Alimentarius Commission to be legally permitted or recognized as acceptable in or on food.

An MRLVD is based on the type and amount of residue considered to be without any toxological hazard for human health as expressed by the Acceptable Daily Intake (ADI), or on the basis of a temporary ADI that utilizes an additional safety factor. An MRLVD also takes into account other relevant public health risks as well as food technological aspects.

When establishing an MRLVD, consideration is also given to residues that occur in food of plant origin and/or the environment. Furthermore, the MRLVD may be reduced to be consistent with good practices in the use of veterinary drugs and to the extent that practical and analytical methods are available.

12. *Good Practice in the Use of Veterinary Drugs* (GPVD)is the official recommended or authorized usage including withdrawal

periods approved by national authorities, of veterinary drugs under practicable conditions.

13. *Processing Aid* means any substance or material, not including apparatus or utensils, not consumed as a food ingredient by itself, intentionally used in the processing of raw materials, foods or its ingredients, to fulfill a certain technological purpose during treatment or processing and which may result in the non-intentional but unavoidable presence of residues or derivatives in the final product.

Appendix 4

Part 1—Uniform Procedure for the Elaboration of Codex, Standards and Related Texts

Steps 1, 2 and 3

(1) The Commission decides, taking into account the ''Criteria for the Establishment of Work Priorities and for the Establishment of Subsidiary Bodies,'' to elaborate a Worldwide Codex Standard and also decides which subsidiary body or other body should undertake the work. A decision to elaborate a Worldwide Codex Standard may also be taken by subsidiary bodies of the Commission in accordance with the above-mentioned criteria, subject to subsequent approval by the Commission or its Executive Committee at the earliest possible opportunity. In the case of Codex Regional Standards, the Commission shall base its decision on the proposal of the majority of members belonging to a given region or group of countries submitted at a session of the Codex Alimentarius Commission.

(2) The Secretariat arranges for the preparation of a proposed draft standard. In the case of Maximum Limits for Residues of Pesticides or Veterinary Drugs, the Secretariat distributes the recommendations for maximum limits, when available from the Joint Meetings of the FAO Panel of Experts on Pesticide Residues in Food and the Environment and the WHO Panel of Experts on Pesticide Residues (JMPR), or the Joint FAO/WHO Expert Committee on Food Additives (JECFA). In the cases of milk and milk products or individual standards for cheeses, the Secretariat distributes the recommendations of the International Dairy Federation (IDF).

(3) The proposed draft standard is sent to members of the Commission and interested international organizations for comment on all aspects including possible implications of the proposed draft standard for their economic interests.

Step 4

The comments received are sent by the Secretariat to the subsidiary body or other body concerned which has the power to consider such comments and to amend the proposed draft standard.

Step 5 [1]

The proposed draft standard is submitted through the Secretariat to the Commission or to the Executive Committee with a view to its adoption as a draft standard. When making any decision at this step, the Commission or the Executive Committee will give due consideration to any comments that may be submitted by any of its members regarding the implications which the proposed draft standard or any provisions of the standard may have for their economic interests. In the case of Regional Standards, all members of the Commission may present their comments, take part in the debate and propose amendments, but only the majority of the Members of the region or group of countries concerned attending the session can decide to amend or adopt the draft. When making any decisions at this step, the members of the region or group of countries concerned will give due consideration to any comments that may be submitted by any of the members of the Commission regarding the implications which the proposed draft standard or any provisions of the proposed draft standard may have for their economic interests.

Step 6

The draft standard is sent by the Secretariat to all members and interested international organizations for comment on all aspects, including possible implications of the draft standard for their economic interests.

Step 7

The comments received are sent by the Secretariat to the subsidiary body or other body concerned, which has the power to consider such comments and amend the draft standard.

Step 8

The draft standard is submitted through the Secretariat to the Commission together with any written proposals received from members and interested international organizations for amendments at Step 8 with a view to its adoption as a Codex Standard. In the case of Regional standards, all members and interested international organizations may present their comments, take part in the debate and propose amendments but only the majority of members of the region or group of countries concerned attending the session can decide to amend and adopt the draft.

Appendix 4

Part 2—Uniform Accelerated Procedure for the Elaboration of Codex Standards and Related Texts

Steps 1, 2 and 3

(1) The Commission or the Executive Committee between Commission sessions, on the basis of a two-thirds majority of votes cast, taking into account the ''Criteria for the Establishment of Work Priorities and for the Establishment of Subsidiary Bodies'', shall identify those standards which shall be the subject of an accelerated elaboration process. The identification of such standards may also be made by subsidiary bodies of the Commission, on the basis of a two-thirds majority of votes cast, subject to confirmation at the earliest opportunity by the Commission or its Executive Committee by a two-thirds majority of votes cast.

(2) The Secretariat arranges for the preparation of a proposed draft standard. In the case of Maximum Limits for Residues of Pesticides or Veterinary Drugs, the Secretariat distributes the recommendations for maximum limits, when available from the Joint Meetings of the FAO Panel of Experts on Pesticide Residues in Food and the Environment and the WHO Panel of Experts on Pesticide Residues (JMPR), or the Joint FAO/WHO Expert Committee on Food Additives (JECFA). In the cases of milk and milk products or individual standards for cheeses, the Secretariat distributes the recommendations of the International Dairy Federation (IDF).

(3) The proposed draft standard is sent to Members of the Commission and interested international organizations for comment on all aspects including possible implications of the proposed draft standard for their economic interests. When standards are subject to an accelerated procedure, this fact shall be notified to the Members of the Commission and the interested international organizations.

Step 4

The comments received are sent by the Secretariat to the subsidiary body or other body concerned which has the power to consider such comments and to amend the proposed draft standard.

Step 5

In the case of standards identified as being subject to an accelerated elaboration procedure, the draft standard is submitted through the Secretariat to the Commission together with any written proposals received from Members and interested international organizations for amendments with a view to its adoption as a Codex standard. In taking any decision at this step, the Commission will give due consideration to any comments that may be submitted by any of its Members regarding the implications which the proposed draft standard or any provisions thereof may have for their economic interests.

Appendix 5—Nature of Codex Standards

Codex standards contain requirements for food aimed at ensuring for the consumer a sound, wholesome food product free from adulteration, and correctly labelled. A Codex standard for any food or foods should be drawn up in accordance with the Format for Codex Commodity Standards and contain, as appropriate, the criteria listed therein.

[1] Without prejudice to any decision that may be taken by the Commission at Step 5, the proposed draft standard may be sent by the Secretariat for government comment prior to its consideration at Step 5, when, in the opinion of the subsidiary body or other body concerned, the time between the relevant session of the Commission and the subsequent session of the subsidiary or other body concerned requires such actions in order to advance the work.

FORMAT FOR CODEX COMMODITY STANDARDS INCLUDING STANDARDS ELABORATED UNDER THE CODE OF PRINCIPLES CONCERNING MILK AND MILK PRODUCTS

Introduction

The format is also intended for use as a guide by the subsidiary bodies of the Codex Alimentarius Commission in presenting their standards, with the object of achieving, as far as possible, a uniform presentation of commodity standards. The format also indicates the statements which should be included in standards as appropriate under the relevant headings of the standard. The sections of the format required to be completed for a standard are only those provisions that are appropriate to an international standard for the food in question.

Name of the Standard
Scope
Description
Essential Composition and Quality Factors
Food Additives
Contaminants
Hygiene
Weights and Measures
Labelling
Methods of Analysis and Sampling

Format for Codex Standards

Name of the Standard

The name of the standard should be clear and as concise as possible. It should usually be the common name by which the food covered by the standard is known or, if more than one food is dealt with in the standard, by a generic name covering them all. If a fully informative title is inordinately long, a subtitle could be added.

Scope

This section should contain a clear, concise statement as to the food or foods to which the standard is applicable unless the name of the standard clearly and concisely identifies the food or foods. A generic standard covering more than one specific product should clearly identify the specific products to which the standard applies.

Description

This section should contain a definition of the product or products with an indication, where appropriate, of the raw materials from which the product or products are derived and any necessary references to processes of manufacture. The description may also include references to types and styles of product and to type of pack. The description may also include additional definitions when these additional definitions are required to clarify the meaning of the standard.

Essential Composition and Quality Factors

This section should contain all quantitative and other requirements as to composition including, where necessary, identity characteristics, provisions on packing media and requirements as to compulsory and optional ingredients. It should also include quality factors which are essential for the designation, definition, or composition of the product concerned. Such factors could include the quality of the raw material, with the object of protecting the health of the consumer, provisions on taste, odor, color, and texture which may be apprehended by the senses, and basic quality criteria for the finished products, with the object of preventing fraud. This section may refer to tolerances for defects, such as blemishes or imperfect material, but this information should be contained in appendix to the standard or in another advisory text.

Food Additives

This section should contain the names of the additives permitted and, where appropriate, the maximum amount permitted in the food. It should be prepared in accordance with guidance given on pages 93 to 96 of the Codex Procedural Manual and may take the following form:

''The following provisions in respect of food additives and their specifications as contained in section * * * of the Codex Alimentarius are subject to endorsement [have been endorsed] by the Codex Committee on Food Additives and Contaminants.''

A tabulation should then follow, viz.:

''*Name of additive, maximum level* (in percentage or mg/kg).''

Contaminants

(a) *Pesticide Residues*: This section should include, by reference, any levels for pesticide residues that have been established by the Codex Committee on Pesticide Residues for the product concerned.

(b) *Other Contaminants*: In addition, this section should contain the names of other contaminants and where appropriate the maximum level permitted in the food, and the text to appear in the standard may take the following form:

''The following provisions in respect of contaminants, other than pesticide residues, are subject to endorsement [have been endorsed] by the Codex Committee on Food Additives and Contaminants.''

A tabulation should then follow, viz.:

''*Name of contaminant, maximum level* (in percentage or mg/kg).''

Hygiene

Any specific mandatory hygiene provisions considered necessary should be included in this section. They should be prepared in accordance with the guidance given on pages 96 to 98 of the Codex Procedural Manual. Reference should also be made to applicable codes of hygienic practice. Any parts of such codes, including in particular any end-product specifications, should be set out in the standard, if it is considered necessary that they should be made mandatory. The following statement should also appear:

''The following provisions in respect of the food hygiene of the product are subject to endorsement [have been endorsed] by the Codex Committee on Food Hygiene.''

Weights and Measures

This section should include all provisions, other than labelling provisions, relating to weights and measures, e.g. where appropriate, fill of container, weight, measure or count of units determined by an appropriate method of sampling and analysis. Weights and measures should be expressed in S.I. units. In the case of standards which include provisions for the sale of products in standardized amounts, e.g. multiples of 100 grams, S.I. units should be used, but this would not preclude additional statements in the standards of these standardized amounts in approximately similar amounts in other systems of weights and measures.

Labelling

This section should include all the labelling provisions contained in the standard and should be prepared in accordance with the guidance given on pages 91 to 93 of the Codex Procedural Manual. Provisions should be included by reference to the General Standard for the Labelling of Prepackaged Foods. The section may also contain provisions which are exemptions from, additions to, or which are necessary for the interpretation of the General Standard in respect of the product concerned provided that these can be justified fully. The following statement should also appear:

''The following provisions in respect of the labelling of this product are subject to endorsement [have been endorsed] by the Codex Committee on Food Labelling.''

Methods of Analysis and Sampling

This section should include, either specifically or by reference, all methods of analysis and sampling considered necessary and should be prepared in accordance with the guidance given on pages 99 to 102 of the Codex Procedural Manual. If two or more methods have been proved to be equivalent by the Codex Committee on Methods of Analysis and Sampling, these could be regarded as alternative and included in this section either specifically or by reference. The following statement should also appear:

''The methods of analysis and sampling described hereunder are to be endorsed [have been endorsed] by the Codex Committee on Methods of Analysis and Sampling.''

[FR Doc. 98–13981 Filed 5–26–98; 8:45 am]

BILLING CODE 3410–DM–P

DEPARTMENT OF AGRICULTURE

Special Provision for Frozen Concentrated Orange Juice Under the North American Free Trade Agreement Implementation Act

AGENCY: Foreign Agricultural Service.

ACTION: Notice of determination of termination of existence of price conditions necessary for imposition of temporary duty on frozen concentrated orange juice from Mexico.

SUMMARY: Pursuant to Section 309(a) of the North American Free Trade Agreement Implementation Act of 1993 (''NAFTA Implementation Act''), this is a notification that for 5 consecutive business days the daily price for frozen concentrated orange juice has exceeded the trigger price.

FOR FURTHER INFORMATION CONTACT: Joseph Somers, Horticultural and Tropical Products Division, Foreign Agricultural Service, U.S. Department of Agriculture, Washington, DC 20250–1000 or telephone at (202) 720–3423.

SUPPLEMENTARY INFORMATION: The NAFTA Implementation Act authorizes the imposition of a temporary duty (snapback) for Mexican frozen concentrated orange juice when certain conditions exist. Mexican articles falling under subheading 2009.11.00 of the Harmonized Tariff Schedule of the United States (HTS) are subject to the snapback duty provision.

Under Section 309(a) of the NAFTA Implementation Act, certain price conditions must exist before the United States can apply a snapback duty on imports of Mexican frozen concentrated orange juice. In addition, such imports must exceed specified amounts before the snapback duty can be applied. The price conditions exist when for each period of 5 consecutive business days the daily price for frozen concentrated orange juice is less than the trigger price.

For the purpose of this provision, the term ''daily price'' means the daily closing price of the New York Cotton Exchange, or any successor as determined by the Secretary of Agriculture (the ''Exchange''), for the closest month in which contracts for frozen concentrated orange juice are being traded on the Exchange. The term ''business day'' means a day in which contracts for frozen concentrated orange juice are being traded on the Exchange.

The term ''trigger price'' means the average daily closing price of the Exchange for the corresponding month during the previous 5-year period, excluding the year with the highest average price for the corresponding month and the year with the lowest average price for the corresponding month.

Price conditions no longer exist when the Secretary determines that for a period of 5 consecutive business days the daily price for frozen concentrated orange juice has exceeded the trigger price. Whenever the price conditions are determined to exist or to cease to exist the Secretary is required to immediately notify the Commissioner of Customs of such determination. Whenever the determination is that the price conditions exist and the quantity of Mexican articles of frozen concentrated orange juice entered exceeds (1) 264,978,000 liters (single strength equivalent) in any of calendar years 1994 through 2002, or (2) 340,560,000 liters (single strength equivalent) in any calendar years 2003 through 2007, the rate of duty on Mexican articles of frozen concentrated orange juice that are entered after the date on which the applicable quantity limitation is reached and before the date of publication in the **Federal Register** of the determination that the price conditions have ceased to exist shall be the lower of—(1) the column 1—General rate of duty in effect for such articles on July 1, 1991; or (2) the column 1—General rate of duty in effect on that day. For the purpose of this provision, the term ''entered'' means entered or withdrawn from warehouse for consumption in the customs territory of the United States.

In accordance with Section 309(a) of the NAFTA Implementation Act, it has been determined that for the period May 5–11, 1998, the daily price for frozen concentrated orange juice has exceeded the trigger price.

Issued at Washington, D.C. the 19th day of May 1998.

Timothy J. Galvin,

Acting Administrator, Foreign Agricultural Service.

[FR Doc. 98–14006 Filed 5–26–98; 8:45 am]

BILLING CODE 3410–10–M

DEPARTMENT OF AGRICULTURE

Rural Housing Service

Notice of Request for Extension of a Currently Approved Information Collection

AGENCY: Rural Housing Service (RHS), USDA.

ACTION: Proposed collection: comments request.

SUMMARY: In accordance with the Paperwork Reduction Act of 1995, this notice announces the Rural Housing Service's intention to request an extension for a currently approved information collection in support of the program for Farm Labor Housing Loan and Grant Policies, Procedures and Authorizations for Multi-Family Housing.

DATES: Comments on this notice must be received by July 27, 1998 to be assured of consideration.

FOR FURTHER INFORMATION CONTACT: Mary Fox, Senior Loan Specialist, Multi-Family Housing Processing Division, RHS, United States Department of Agriculture, Stop 0782, 1400 Independence Ave., SW, Washington, DC 20250–0782, Telephone (202) 720–1606.

SUPPLEMENTARY INFORMATION:

Title: Farm Labor Housing Loan and Grant Policies, Procedures and Authorizations.

OMB Number: 0575–0045.

Expiration Date of Approval: July 31, 1998.

Type of Request: Extension of a currently approved information collection.

Abstract: The Rural Housing Service (RHS) is authorized under Section 514, 515, 516, and 521 of Title V of the Housing Act of 1949, as amended, to make initial and subsequent loans and grants to provide housing and related facilities for domestic farm labor. A loan only can be made to a farmowner, family farm partnership, family farm corporation, or an association of farmers whose farming operations demonstrate a need for farm labor housing and that is engaged in agricultural or aquacultural farming operations and which will own the housing and operate it on a nonprofit basis. A loan and/or grant can be made to public, private nonprofit organizations for domestic farm labor in areas where need exists. In some cases, rental assistance may be provided to eligible tenants.

RHS has the responsibility of assuring the public that funds for LH projects are financed to build, buy, improve or repair farm labor housing and related facilities. The facilities financed are to have decent, safe and sanitary living conditions and are managed and operated as mandated by Congress. 7 CFR part 1944, subpart D was issued to set forth the policies and procedures and delegation of authority for making initial and subsequent insured loans under Section 514 and grants under Section 516 to provide housing and related facilities for domestic farm labor and to assure that applicable laws and authorities are carried out as intended.

With the provisions of this regulation, RHS will be able to provide the financial assistance and necessary guidance to applicants in the development of their project proposals. It provides the Agency the capacity to meaningfully evaluate the feasibility of the proposed projects. RHS will be able to assure Congress and the general public that all LH projects will be operated for purposes that are intended, and for the benefit of those they are mandated to serve.

The required information is collected on a project-by-project basis and is done so in accordance with the amended Housing Act of 1949, so that RHS can provide guidance and be assured of compliance with terms and conditions of loan, grant, and or subsidy agreements.

Estimate of Burden: Public reporting burden for this collection of information is estimated to average 11 hours per response.

Respondents: Farms, Not-for-profit Institutions, and State, Local or Tribal Government.

Estimated Number of Respondents: 100.

Estimated Number of Responses per Respondent: 7.5.

Estimated Total Annual Burden on Respondents: 8,610 hours.

Copies of this information collection can be obtained from Michele Brooks, Regulations and Paperwork Management Branch, Support Services Division, at (202) 692–0036.

Comments are invited on: (a) Whether the proposed collection of information is necessary for the proper performance of the functions of RHS, including whether the information will have practical utility; (b) the accuracy of RHS's estimate of the burden of the proposed collection of information including the validity of the methodology and assumptions used; (c) ways to enhance the quality, utility and clarity of the information to be collected; and (d) ways to minimize the burden of the collection of information on those who are to respond, including through the use of appropriate automated, electronic, mechanical, or other technological collection techniques or other forms of information technology. Comments may be sent to Michele Brooks, Regulations and Paperwork Management Branch, U.S. Department of Agriculture, Rural Development, STOP 0743, 1400 Independence Ave. SW, Washington, DC 20250. All responses to this notice will be summarized and included in the request for OMB approval. All comments will also become a matter of public record.

Dated: May 14, 1998.

Jan E. Shadburn,

Administrator, Rural Housing Service.

[FR Doc. 98–14008 Filed 5–26–98; 8:45 am]

BILLING CODE 3410–XV–U

DEPARTMENT OF COMMERCE

Economics and Statistics Administration

Secretary's 2000 Census Advisory Committee

AGENCY: Economics and Statistics Administration, Department of Commerce.

ACTION: Notice of public meeting.

SUMMARY: Pursuant to the Federal Advisory Committee Act (P.L. 92–463, as amended by P.L. 94–409, P.L. 96–523, and P.L. 97–375), we are giving notice of a meeting of the Commerce Secretary's 2000 Census Advisory Committee. The meeting will convene on June 11–12, 1998, in the Francis Amasa Walker Conference Center, Bureau of the Census, 4700 Silver Hill Road, Suitland, MD 20746. The Committee will continue to review and discuss Dress Rehearsal operations and procedures as well as Census 2000,including plans for data products. The Committee also will discuss the results of the June 3 Joint Advisory Committee Meeting on the tabulation of racial data from Census 2000.

DATES: On Thursday, June 11, 1998, the meeting will begin at 8:45 a.m. and adjourn for the day at 4:30 p.m. On Friday, June 12, 1998, the meeting will begin at 8:45 a.m. and adjourn at 4:15 p.m.

ADDRESSES: The meeting will take place in the Francis Amasa Walker Conference Center, Bureau of the Census, 4700 Silver Hill Road, Suitland, MD 20746.

FOR FURTHER INFORMATION CONTACT: Anyone wishing additional information about this meeting, or who wishes to submit written statements or questions, may contact Maxine Anderson-Brown, Committee Liaison Officer, Department of Commerce, Bureau of the Census, Room 3039, Federal Building 3, Washington, DC 20233, telephone 301–457–2308, TDD 301–457–2540.

SUPPLEMENTARY INFORMATION: The Committee is composed of a Chair, Vice-Chair, and up to thirty-five member organizations, all appointed by the Secretary of Commerce. The Committee will consider the goals of Census 2000 and user needs for information provided by that census. The Committee will provide an outside user community perspective about how operational planning and implementation methods proposed for Census 2000 will realize those goals and satisfy those needs. The Committee shall consider all aspects of the conduct of the Census 2000 of Population and Housing and shall make recommendations for improving that census.

A brief period will be set aside on Friday afternoon for public comment and questions. However, individuals with extensive questions or statements for the record must submit them in writing to the Commerce Department official named above at least three working days prior to the meeting.

The meeting is physically accessible to people with disabilities. Requests for sign language interpretation or other auxiliary aids should be directed to Kathy Maney at 301–457–2308, TDD 301–457–2540.

Dated: May 19, 1998.

Robert J. Shapiro,

Under Secretary for Economic Affairs, Economics and Statistics Administration.

[FR Doc. 98–14004 Filed 5–26–98; 8:45 am]

BILLING CODE 4510–07–M

DEPARTMENT OF COMMERCE

National Institute of Standards and Technology

Malcolm Baldrige National Quality Award's Board of Overseers

AGENCY: National Institute of Standards and Technology, Commerce.

ACTION: Notice of public meeting.

SUMMARY: Pursuant to the Federal Advisory Committee Act, 5 U.S.C. app. 2, notice is hereby given that there will be a meeting of the Board of Overseers of the Malcolm Baldrige National Quality Award on Monday, June 8, 1998, from 8:30 a.m. to 4 p.m. The Board of Overseers consists of ten members prominent in the field of quality management and appointed by the Secretary of Commerce, assembled to advise the Secretary of Commerce on the conduct of the Baldrige Award. The purpose of the meeting on June 8, 1998, will be for the Board of Overseers to discuss and review information received from the National Institute of Standards and Technology with the members of the Judges Panel of the Malcolm Baldrige National Quality Award. The Agenda will include reviewing the roles and responsibilities of Judges and Overseers; Award marketing efforts; discussion of proposed program changes to include two award/category cap; health care and education awards including fund raising and 1999 criteria; and 1998 Award criteria changes and future criteria evolution.

DATE: The meeting will convene June 8, 1998 at 8:30 a.m., and adjourn at 4 p.m. on June 8, 1998.

ADDRESS: The meeting will be held at the National Institute of Standards and Technology, Administration Building Conference Room (seating capacity 36, includes 24 participants), Gaithersburg, Maryland 20899.

FOR FURTHER INFORMATION CONTACT: Dr. Harry Hertz, Director, National Quality Program, National Institute of Standards and Technology, Gaithersburg, Maryland 20899, telephone number (301) 975–2361.

Dated: May 19, 1998.

Robert E. Hebner,

Acting Deputy Director.

[FR Doc. 98–13942 Filed 5–26–98; 8:45 am]

BILLING CODE 3510–30–M

DEPARTMENT OF COMMERCE

National Institute of Standards and Technology

Judges Panel of the Malcolm Baldrige National Quality Award

AGENCY: National Institute of Standards and Technology, Department of Commerce.

ACTION: Notice of closed meeting.

SUMMARY: Pursuant to the Federal Advisory Committee Act, 5 U.S.C. app. 2, notice is hereby given that there will be a closed meeting of the Judges Panel of the Malcolm Baldrige National Quality Award on Tuesday, June 9, 1998. The Judges Panel is composed of nine members prominent in the field of quality management and appointed by the Secretary of Commerce. The purpose of this meeting is to review final judging interaction, survey of applicants and judging process improvement discussions, and to begin the review process of the 1998 Award applicants to be recommended as Award winners. The applications under review contain trade secrets and proprietary commercial information submitted to the Government in confidence.

DATES: The meeting will convene June 9, 1998, at 8:30 a.m. and adjourn at 3:00 p.m. on June 9, 1998. The entire meeting will be closed.

ADDRESSES: The meeting will be held at the National Institute of Standards and Technology, Administration Building Conference Room, Gaithersburg, Maryland 20899.

FOR FURTHER INFORMATION CONTACT: Dr. Harry Hertz, Director, National Quality Program, National Institute of Standards and Technology, Gaithersburg, Maryland 20899, telephone number (301) 975–2361.

SUPPLEMENTARY INFORMATION: The Assistant Secretary for Administration, with the concurrence of the General Counsel, formally determined on May 19, 1998, that the meeting of the Judges Panel will be closed pursuant to Section 10(d) of the Federal Advisory Committee Act, 5 U.S.C. app. 2, as amended by Section 5(c) of the Government in the Sunshine Act, Pub. L. 94–409. The meeting, which involves examination of records and discussion of Award applicant data, may be closed to the public in accordance with Section 552b(c)(4) of Title 5, United States Code, since the meeting is likely to disclose trade secrets and commercial or financial information obtained from a person and privileged or confidential.

Dated: May 19, 1998.

Robert E. Hebner,

Acting Deputy Director.

[FR Doc. 98–13946 Filed 5–26–98; 8:45 am]

BILLING CODE 3510–13–M

DEPARTMENT OF COMMERCE

National Oceanic and Atmospheric Administration

[Docket No. 980324076–8076–01; I.D. 031798B]

RIN 0648–ZA38

Halibut and Sablefish Fisheries Quota-Share Loan Program; Final Program Notice and Announcement of Availability of Federal Assistance

AGENCY: National Marine Fisheries Service (NMFS), National Oceanic and Atmospheric Administration, Commerce.

ACTION: Announcement of availability of Federal assistance.

SUMMARY: NMFS announces the availability of long-term loans for financing or refinancing the purchase cost of quota share (QS) in the halibut and sablefish fisheries off Alaska. Only entry-level fishermen or fishermen who fish from small vessels are eligible for these loans.

DATES: NMFS will accept applications only during an application open season. The application open season will begin on June 10, 1998 and will end on June 24, 1998. All loan funds available for FY 1998 must be committed before September 30, 1998.

ADDRESSES: Applicants should send loan applications to the Northwest Financial Services Branch, National Marine Fisheries Service, National Oceanic and Atmospheric Administration, U.S. Department of Commerce, 7600 Sand Point Way, NE (BIN C15700), Building No. 1, Seattle, WA 98115.

FOR FURTHER INFORMATION CONTACT: Kimberly Berryhill at (206) 526–6122 (voice) or (206) 526–6306 (facsimile).

SUPPLEMENTARY INFORMATION:

I. Introduction

A. Background

The Sustainable Fisheries Act (SFA) (P.L. 104–297) amended section 1104A(a)(7) of Title XI of the Merchant Marine Act (46 U.S.C. App. 1274) and section 303(d)(4) of the Magnuson-Stevens Fishery Conservation and Management Act (Magnuson-Stevens Act) (16 U.S.C. 1801 *et seq.*) to authorize financing and refinancing the cost of entry-level fishermen and fishermen who fish from small boats purchasing individual fishing quota (IFQ).

Although the SFA indicates that loans are available for purchasing IFQ, the basic fishing permit for the halibut and sablefish fisheries is termed ''QS'' rather than ''IFQ.'' In these fisheries, IFQ is an annual allocation of the pounds of fish that each QS holder may harvest. Consequently, NMFS interprets the SFA to allow loans for the cost of purchasing basic fishing permits rather than annual harvest allocations under those permits. These loans will finance the purchase of halibut and sablefish QS rather than IFQ.

Title XI of the Merchant Marine Act, 1936, is the credit authority under which NMFS will make these loans. This authority is subject to the Federal Credit Reform Act of 1990 (FRCA) (2 U.S.C. 661). This Act requires estimated net loan losses (FCRA cost) to be appropriated in cash at the time Congress authorizes annual loan ceilings.

FY 1998 appropriations for the U.S. Department of Commerce included a $100,000 advance to fund the FCRA cost of this loan program during its first year (from October 1, 1997, through September 30, 1998).

The amount of annual FCRA credit authority available is a ratio of the FCRA cost rate and the FCRA cost appropriated. NMFS preliminarily estimates the FCRA cost rate of these loans to be 2 percent. Consequently, the $100,000 appropriated for this loan program's FY 1998 FCRA cost will preliminarily support a $5,000,000 credit authority ($5,000,000 times 0.2 equals $100,000).

The FY 1998 credit authority may not support more than 20 to 35 loans. FY 1998 loan demand will most likely exceed supply. NMFS will, to the maximum extent possible, process loan applications (up to the maximum FY 1998 credit authority available) in the order in which applicants submit them during an application open season. For the specific dates upon which the application open season begins and ends, see the DATES heading at the beginning of this document. All applications must be submitted by first-class U.S. mail. No other form of application submission is acceptable. To reduce the open-season paperwork burden, applicants need complete only a small portion (Section A) of the

application form at the time of open season application.

These loans will, until further notice, continue to be available in any year for which adequate FCRA credit authority exists.

SFA amendments to section 303(d)(4) and section 304(d)(2) of the Magnuson-Stevens Act authorize the FCRA cost of IFQ lending to be funded by up to 25 percent of the IFQ and Community Development Quota (CDQ) fee revenue from the IFQ fishery involved. Presumably, a portion of halibut and sablefish fees from this revenue source will, in the future, fund the annual FCRA cost of these loans for purchasing halibut and sablefish QS.

B. Catalog of Federal Domestic Assistance

The program of which halibut and sablefish QS loans are a part is listed in the ''Catalog of Federal Domestic Assistance'' under number 11.415, Fisheries Obligation Guarantee Program.

II. Definitions

Applicant means either an entry-level fisherman who applies for a loan or a fisherman who fishes from a small vessel who applies for a loan.

Application means an application for a loan from an applicant.

Application form means NOAA Form 88–1 (bearing OMB approval No. 0648–0082 and expiring on September 30, 1998).

Base year means the year in which an applicant applies for a loan.

Entry-level fisherman means a fisherman who:

(1) Does not own any QS;

(2) Applies for a loan to purchase QS that involves an IFQ total not greater than 8,000 lb (3,628.7 kg) during the base year; and

(3) Will be a crew member aboard the vessel that harvests the IFQ for the loan QS.

Fisherman who fishes from a small vessel means a fisherman:

(1) Who applies for a loan to purchase halibut or sablefish QS previously assigned under § 676.20(c)(2), sablefish QS previously assigned under § 676.20(c)(3), halibut QS previously assigned under § 676.20(c)(4), and/or halibut QS previously assigned under § 676.20(c)(5);

(2) Whose aggregate ownership of QS (including the loan QS) will involve an IFQ not greater than 50,000 lb (22,679.6 kg) during the base year;

(3) Who will be a crew member aboard the vessel that harvests the IFQ for the aggregate QS such fisherman owns (including the loan QS) at the time the loan QS transfers to such fisherman;

(4) Who has, for at least a total of 150 days at any point in the past, been a crewman aboard any vessel in any U.S. commercial fishery; and

(5) Who does not own, in whole or in part, any vessel of the type involved in the previous assignment of halibut or sablefish QS under § 676.20(c)(1) or (c)(2).

Halibut/sablefish means halibut, sablefish, or halibut and sablefish from the QS fishery off Alaska for halibut and/or the QS fishery off Alaska for sablefish.

IFQ means the annual catch limit of halibut/sablefish that may be harvested by a person who is lawfully allocated a harvest privilege for a specific portion of the total allowable catch of halibut/sablefish.

Loan means a program loan for financing or refinancing the cost of purchasing halibut/sablefish QS.

Loan QS means the QS purchased with the proceeds of a loan.

NMFS means the National Marine Fisheries Service, National Oceanic and Atmospheric Administration, United States Department of Commerce.

Notice date means the date this document is published in the Federal Register.

NWFSB means the Northwest Financial Services Branch (F/SF23), National Marine Fisheries Service, National Oceanic and Atmospheric Administration, U.S. Department of Commerce, 7600 Sand Point Way, NE (BIN C15700), Building No. 1, Seattle, WA 98115.

Open season means the period beginning and ending on the dates specified under the DATES heading at the beginning of this document.

Program means the halibut/sablefish loan program described in this document.

QS means a halibut/sablefish permit, the face amount of which is used as a basis for the annual calculation of a person's IFQ.

RAM Program means the Restricted Access Management activities in the Alaska Regional Office of the National Marine Fisheries Service.

§ 676.20(c) means § 676.20(c) of Title 50, Code of Federal Regulations (as revised as of October 1, 1995).

Title XI means Title XI of the Merchant Marine Act, 1936 (the statutory credit authority under which lending the purchase cost of IFQ is but one of the eligible fisheries loan purposes).

III. Eligible Applicants

Any entry-level fisherman or fisherman who fishes from a small vessel and is a U.S. citizen is eligible to apply for a loan.

IV. Loan Purpose

(1) *General*. The loan purpose is financing or refinancing the cost of purchasing QS.

(2) *Fishermen who fish from small vessels*. The loan QS must be: halibut or sablefish QS previously assigned under § 676.20(c)(2), sablefish QS previously assigned under § 676.20(c)(3), halibut QS previously assigned under § 676.20(c)(4), and/or halibut QS previously assigned under § 676.20(c)(5). Applicants must be eligible to receive (hold) the loan QS. The amount of QS any applicant will own at the time the loan QS transfers to the applicant may not have involved an aggregate IFQ greater than 50,000 lb (22,679.6 kg) during the base year. The IFQ for such QS during any year other than the base year is irrelevant.

If, for example, an applicant who owns QS that involved a 20,000–lb (9,071.8–kg) IFQ during the base year wants a loan to finance the purchase of additional QS, the loan QS may not have involved more than an additional 30,000–lb (13,607.8–kg) IFQ during the base year.

Applicants may not own, in whole or in part, any vessel of the type involved in the previous assignment of halibut or sablefish QS under § 676.20(c)(1) or (c)(2).

Although CFR part 676 is not the CFR part that presently regulates halibut/sablefish, § 676.20(c) is the section that the Sustainable Fisheries Act requires NMFS to use for the matters involved in this notice. NWFSB can provide applicants copies of § 676.20(c) and explain how this section controls the loan QS.

Each applicant must be a crewman aboard the vessel that will harvest the total IFQ for all QS that the applicant owns at the time the loan QS transfers to applicant.

(3) *Entry-level fishermen*. The loan QS may be of any type for which the RAM Program will issue a Quota Share Certificate in the purchaser's name. The loan QS may not have involved an IFQ greater than 8,000 lb (3,628.7 kg) during the base year. The IFQ for such QS during any year other than the base year is irrelevant.

(4) *Applicants' indirect QS or vessel ownership interests*. NMFS will count against the poundage ceilings in paragraphs IV(2) and (3) of this notice whatever portion of QS interests (and the base-year IFQ for them) applicants indirectly own by virtue of owning corporations, partnerships, or other forms of business organizations that directly own QS. For example, if an

applicant owns one-third of the stock in a corporation that owns QS with a base-year IFQ of 30,000–lb (13,607.8–kg), NMFS will, for the purposes of the ceilings, regard the applicant as also owning QS with a base-year IFQ of 10,000 lb (4,535.9 kg).

NMFS will also, for the purpose of the vessel ownership restriction in paragraph IV(2) of this notice, consider that applicants indirectly have an ownership interest in vessels which are owned by corporations, partnerships, or other forms of business organization in which applicants own any corporate shares, partnership interests, or other interests. For example, if an applicant owns one share of stock in a corporation that owns a vessel of the type involved in the previous assignment of halibut or sablefish QS under § 676.20(c)(1) or (c)(2), NMFS will consider the applicant to partly own such a vessel. Such an applicant will not be eligible for a loan.

(5) *Refinancing.* Applicants may refinance with the proceeds of loans any existing debts which previously financed the purchase cost of QS, provided that the QS purchases would themselves have been eligible for program financing if the program had been available at the time of QS purchase. In the instance of refinancing only, NMFS will consider loans in amounts up to 80 percent of QS' current market value (rather than original purchase cost), provided that loans will, in no event, be for an amount greater than the amount required to fully repay the QS debt being refinanced.

V. Loan Terms and Conditions

(1) *Down payment.* Applicants financing (rather than refinancing) QS purchase cost must fund 20 percent of the purchase cost from funds other than loan proceeds. If the current market value of QS whose purchase cost is being refinanced (rather than financed) is higher than its original purchase price, applicants may need less, or no, down payment.

(2) *Loan amount.* The amount of a loan that finances (rather than refinances) QS purchase cost may not exceed 80 percent of QS purchase cost. Loan amounts may, however, exceed 80 percent if the current market value of QS whose purchase cost is being refinanced (rather than financed) is higher than its original purchase price.

(3) *Interest rate*. Each loan's annual interest rate will be 2 percent higher than the U.S. Treasury's cost of borrowing public funds of an equivalent maturity. For example, the annual loan interest rate would, on February 20, 1998, have been approximately 7.9 percent for a 20-year maturity. Interest is simple interest.

(4) *Maturity*. Loan maturity may not exceed 25 years, but may be shorter depending on credit and other considerations.

(5) *Repayment*. Repayment will generally be by equal quarterly installments of principal and interest.

(6) *Security*. The loan QS will, in every case, secure the loan. NMFS will require all parties with significant ownership interests in corporate or partnership applicants to personally guarantee loan repayment. Some credit risks may require additional security.

VI. Application

(1) *Open Season*. NMFS will accept for processing only those applications submitted during the open season. NMFS will not accept applications submitted before or after the open season.

(2) *Method of submission*. NMFS will accept only those applications submitted by first-class U.S. mail. NMFS will not accept applications submitted by any other method (including, but not limited to: any form of U.S. mail other than first class mail, any other delivery service, personal delivery, delivery by facsimile, etc.).

(3) *Submission address*. NMFS will accept only those applications addressed directly to NWFSB at the mailing address listed both under the ADDRESSES heading of this document and in this document's definition of the term ''NWFSB''.

(4) *Date of submission*. The date of each application's submission will be the date on which the U.S. Postal Service postmarks the envelope containing the application. The sole exception will be applications that NWFSB first receives later than five business days after the last day of the open season (even though applicants might have submitted such applications before the end of the open season). Applications subject to this exception will have the same submission date as the last day of the open season.

(5) *Processing Priority*. All applications submitted on each day of the open season will have a processing priority higher than all applications submitted on every later day in the open season. Relative processing priority among applications submitted on the same date will be decided by random selection from among all applications submitted on that date. The sole exception will be applications that NWFSB first receives later than five business days after the last day of the open season (even though applicants might have submitted such applications before the end of the open season). Applications subject to this exception will have the lowest priority of all applications received on the last day of the open season, and the date and time at which NWFSB actually first receives them will determine their relative priority.

Processing priority does not mean that applications will be approved. It merely means that NWFSB will process applications in the order of their assigned processing priority.

(6) *Application form*. All applicants must use the application form. NMFS will not accept any other form of application. Open-season applicants need complete only Section A of the application form. After the open season, NWFSB will contact each applicant whose processing priority makes the applicant's application eligible for processing as a

FY 1998 loan and begin a standard due-diligence credit investigation. The application form is available from NWFSB. NWFSB will send only Section A of the application form to parties requesting the application form for the purpose of submitting an open-season application. NWFSB can, upon request, do this by facsimile. On the notice date, NWFSB will immediately do so for all parties who have previously expressed an interest in applying for a loan.

(7) *Notification of processing priority*. NWFSB will, within 7 working days after the last day of the open season, enumerate the processing priority of all open-season applications that NWFSB received. NWFSB will immediately thereafter notify each open-season applicant of its processing priority and the relative likelihood of its application being processed as a FY 1998 loan. NWFSB will then accomplish a due-diligence credit investigation for each application whose processing priority (and other factors) makes it eligible for processing as a FY 1998 loan.

(8) *Application fee*. The application fee is 0.5 percent of the loan amount for which a successful open-season applicant applies. Application fees will be due only for those open-season applications that NWFSB actually accepts for processing as FY 1998 loans. No application fee is due for any open-season application that NWFSB does not accept for processing as a FY 1998 loan. Although the application fee is due at the time of application, it is not payable until NMFS requests its payment. NMFS will not request application fee payment until after it has accepted an application for processing as a FY 1998 loan and an application review and/or interview with the applicant and other necessary

parties prospectively indicates the applicant's compliance with basic loan eligibility and credit criteria. Half the application fee is fully earned at the time NMFS requests its payment. NMFS will not return this half regardless of subsequent application disposition. The other half is fully earned only when NMFS issues an approval in principal letter approving an application. Once it has issued an approval in principle letter, NMFS will not return the second half of the application fee.

(9) *Transfer eligibility certificate*. Transfer eligibility certificates certify that parties are eligible to receive (hold) QS. The RAM Program issues these certificates to prospective QS purchasers. If, at the time of application, an applicant does not already have a transfer eligibility certificate, NWFSB will advise the applicant how to apply for one. If applicants cannot get transfer eligibility certificates for the QS they prospectively intend to purchase, pursuing the loan application process further is pointless. Applicants who do not obtain appropriate transfer eligibility certificates promptly enough may lose their processing priority to applicants who do.

VII. Loan Processing

NMFS will, to the maximum extent possible, process loan applications in the order of their submission during the open season. If, however, applicants cannot, in NWFSB's discretion, reasonably promptly comply with application processing requirements, they may lose their processing priority to applicants who can. NWFSB will, from time to time, specify compliance time requirements that are responsive to the administrative need to have all credit authority fully obligated before the end of FY 1998. Applicants must comply or lose their application priority to other applicants who will.

NWFSB will conduct a standard due-diligence credit investigation. This should be a relatively simple and quick process. Once NMFS has made a due-diligence credit decision, loan approval requires certain internal clearances that will add some time to processing, but NMFS will try to accelerate processing as much as possible. Upon formal loan approval, NMFS will issue an approval in principle letter for the applicant's acceptance.

VIII. Loan Closing

NMFS will establish all loan terms and conditions, prepare all closing documents, close all loans, and record all security interests. NMFS should generally have no need for applicants to hire attorneys for any loan purpose, but applicants may do so if they wish. Generally, the only closing costs to applicants will be the cost of doing title/lien searches on, or recording security interests in, loan QS. NWFSB may need to do title/lien searches, and record security interests, in several different jurisdictions.

IX. Title XI and 50 CFR Part 253

The general rules implementing Title XI are 50 CFR part 253, subpart B. Loans will be subject to so much of the other provisions of Title XI and of its implementing rules as can reasonably be applied to loans involving the purchase under this notice of QS (rather than the purchase of fishing vessels, fisheries shoreside facilities, or aquacultural facilities).

X. Administrative Requirements

(1) In accordance with the provisions of the Debt Collection Improvement Act of 1996, a person may not obtain any Federal financial assistance in the form of a loan (other than a disaster loan) or loan guarantee if the person has an outstanding debt (other than a debt under the Internal Revenue Code of 1986) with any Federal agency which is in a delinquent status, as determined under standards prescribed by the Secretary of the Treasury.

(2) Applicants are subject to a name check review process. Name checks are intended to reveal if any key individuals associated with the applicant have been convicted of or are presently facing criminal charges such as fraud, theft, perjury, or other matters which significantly reflect on the applicant's management honesty or financial integrity.

(3) A false statement on an application is grounds for denial or termination of funds and grounds for possible punishment by a fine or imprisonment as provided in 18 U.S.C. 1001.

(4) Applicants must submit a completed Form CD–511, ''Certifications Regarding Debarment, Suspension and Other Responsibility Matters; Drug-Free Workplace Requirements and Lobbying,'' and the following explanations are hereby provided:

i. *Nonprocurement Debarment and Suspension*. Prospective participants (as defined at 15 CFR Part 26, Section 105) are subject to 15 CFR Part 26, ''Nonprocurement Debarment and Suspension'' and the related section of the certification form prescribed above applies;

ii. *Anti-Lobbying*. Persons (as defined at 15 CFR Part 28, Section 105) are subject to the lobbying provisions of 31 U.S.C. 1352, ''Limitation on use of appropriated funds to influence certain Federal contracting and financial transactions,'' and the lobbying section of the certification form prescribed above applies to applications/bids for grants, cooperative agreements, and contracts for more than $100,000, and loans and loan guarantees for more than $150,000.

Classification

Neither the Administrative Procedure Act nor any other law requires prior notice and opportunity for public comment about this notice (which concerns loans). Consequently, the Regulatory Flexibility Act does not require a regulatory flexibility analysis.

This notice is not significant for purposes of E.O. 12866.

This document contains a collection-of-information requirement subject to the Paperwork Reduction Act. OMB has, under control number 0648–0012, approved the collection of this information.

Notwithstanding any other provision of law, no person is required to respond to, nor shall any person be subject to a penalty for failure to comply with, a collection of information subject to the requirements of the Paperwork Reduction Act unless that collection of information displays a currently valid OMB control number.

Dated: May 20, 1998.

David L. Evans,

Deputy Assistant Administrator for Fisheries, National Marine Fisheries Service.

[FR Doc. 98–13979 Filed 5–26–98; 8:45 am]

BILLING CODE 3510–22–F

DEPARTMENT OF COMMERCE

National Oceanic and Atmospheric Administration

DEPARTMENT OF THE INTERIOR

Fish and Wildlife Service

[Docket No. 980415097–8097–01]

RIN 0648–ZA40

Regional Nonindigenous Species Research and Outreach and Improved Methods for Ballast Water Treatment and Management: Request for Proposals for 1998

AGENCIES: National Sea Grant College Program, National Oceanic and Atmospheric Administration, Department of Commerce and Fish and Wildlife Service, Department of Interior.

ACTION: Notice of request for proposals.

SUMMARY: The purpose of this notice is to advise the public that the National Sea Grant College Program (Sea Grant) and the U.S. Fish and Wildlife Service (USFWS) are entertaining proposals to participate in innovative research, outreach, and demonstration projects that address the problems of nonindigenous species in U.S. coastal waters. Sea Grant will support regional projects to prevent and/or control nonindigenous species invasions in the marine environment. Sea Grant and the Service will support demonstration projects to improve ballast water treatment and management in U.S. marine waters in general (Service), and in Chesapeake Bay in particular (Sea Grant).

DATES: Proposals must be received by 4:00 p.m. EDT on July 8, 1998.

ADDRESSES: Proposals should be addressed to: National Sea Grant College Program, R/SG, Attn: Nonindigenous Species Competition, Room 11877, NOAA, 1315 East-West Highway, Silver Spring, MD 20910.

FOR FURTHER INFORMATION CONTACT: Leon M. Cammen, Nonindigenous Species Coordinator, or Mary Robinson, Secretary, National Sea Grant Office, 301–713–2435; facsimile 301–713–0799; or Robert A. Peoples, U.S. Fish and Wildlife Service, 703–358–2025; facsimile 703–358–2044.

SUPPLEMENTARY INFORMATION:

I. Program Authority

Authority: 16 U.S.C. 4701 *et seq.*; 33 U.S.C. 1121 *et seq.*

Catalog of Federal Assistance Numbers: 11.417, Sea Grant Support; 15.FFA, Fish and Wildlife Management Assistance.

II. Program Description

Background

Nonindigenous species introductions are increasing in frequency and causing substantial damage to the Nation's environment and economy. Although the most prominent of these has been the zebra mussel, many other nonindigenous species have been introduced and have truly become a nationwide problem that threatens many aquatic ecosystems. While some intentional introductions may have had beneficial effects, there are many other nonindigenous species already present in U.S. waters, or with the potential to invade, that may cause significant damage to coastal resources and the economies that depend upon them. In response, the Nonindigenous Aquatic Nuisance Prevention and Control Act of 1990 (16 U.S.C. 4701 *et seq.*) established a framework for the Nation to address the problems of aquatic nuisance species invasions of coastal and Great Lakes ecosystems.

Although problems such as the zebra mussel and the sea lamprey within the Great Lakes have received the most attention, invasions of nonindigenous species in coastal marine environments are an increasing and serious threat. The National invasive Species Act of 1996 (Pub. L. 104–332, 110 Stat. 4073) recognized this by calling for Federal funding to support aquatic nuisance species prevention and control in five regions of the U.S. coast: Chesapeake Bay, the Gulf of Mexico, the Pacific coast, the Atlantic coast, and the San Francisco Bay—Delta estuary.

In addition, the Act recognized the serious threat posed by ballast water discharge in causing new invasions and called for ballast water management demonstration programs. A 1996 National Research Council study of the ballast water problem, ''Stemming the Tide,'' concluded that with the growth of global shipping, and the changes in modern shipping practices, introductions of nonindigenous species through ballast water discharge were likely to remain a serious problem. The study called for the development of improved technology for the management of ballast water to eliminate this threat to the Nation's ecosystems. A demonstration project is currently underway in the Great Lakes testing filtration of ballast water as method of reducing introductions, but it is acknowledged that there is unlikely to be a single solution that is acceptable for all modes of shipping operations and classes of vessels.

Funding Availability and Priorities

The National Sea Grant College Program encourages proposals that address one of the following two program areas:

(1) Regional Research and Outreach to Prevent and Control Nonindigenous Species Invasions in Marine Environments

Projects should provide an ''end-to-end'' approach that integrates the research with the outreach necessary to ensure that the results will be applied to address the problem in that region. Projects must be targeted toward one (or more) of the following regions: Chesapeake Bay, the Gulf of Mexico, the Pacific coast, the Atlantic coast, and the San Francisco Bay-Delta estuary. Possible topics include (but are not limited to): identification of vectors of introduction, development of cost-effective, realistic methods of prevention; development of selective, effective controls that minimize adverse ecological/environmental impacts—engineering (redesigning water intakes, etc.), physical (scraping, filtering, etc.), chemical (biocides, antifoulants, etc.), biological (parasites, predators, etc.), and/or physicochemical (heat, salinity, pH, etc.); and identification of mechanisms for further dispersal of individual established species that will lead to the development of safeguards and protocols to prevent and/or slow the spread of nonindigenous species to uninfested areas.

A total of $420,000 is available for this activity in FY1998; an additional $425,000 will be made available in FY1999 if appropriated. Proposals may be submitted for one or two years of activity; the second year of funding is contingent upon availability of funds and submission of an annual report showing satisfactory progress. Project activities should include identified milestones for each project year. Proposals may request up to $140,000 per year and must include additional matching funds equivalent to 33% of the Federal funds requested; for example, a proposal requesting a total of $270,000 for two years would have to include at least an additional $90,000 in matching funds. The total dollar amount of indirect costs proposed in an application under this program area must not exceed the indirect cost rate negotiated and approved by the cognizant Federal agency prior to the proposed effective date of the award or 100 percent of the total proposed direct costs dollar amount in the application, whichever is less. It is anticipated that from three to five projects will be supported; no more than one project will be funded in each region.

(2) Chesapeake Bay Ballast Water Management

Research to develop workable and effective methods to eliminate ballast water discharge as a source of nonindigenous species introductions without imposing undue hardships on the shipping industry. Possible approaches include (but are not limited to) development and/or demonstration of technologies for treatment or management of ballast water on-board ship or for on-shore management. Projects that include on-vessel or on-shore demonstrations of feasibility will be given priority. Projects must be clearly targeted toward addressing ballast water management in Chesapeake Bay, but investigators located outside the Chesapeake Bay region may participate if all demonstrations are carried out on Chesapeake Bay.

A total of $500,000 is available for this activity in FY1998. Proposals are limited to one year of funding, but activities may extend for up to two years; an annual report showing satisfactory progress must be submitted at the end of the first year. Project activities should include identified milestones for each project year. Proposals may request up to the full $500,000; matching fund are encouraged, but not required. The total of dollar amount of indirect costs proposed in an application under this program area must not exceed the indirect cost rate negotiated and approved by the cognizant Federal agency prior to the proposed effective date of the award or 100 percent of the total proposed direct costs dollar amount in the application, whichever is less.

The U.S. Fish and Wildlife Service encourages proposals that address the following program area:

(3) National Ballast Water Management

Research to develop workable and effective methods to eliminate ballast water discharge as a source of nonindigenous species introductions without imposing undue hardships on the shipping industry. Possible approaches include (but are not limited to) development and/or demonstration of technologies for treatment or management of ballast water on-board ship or for on-shore management. Projects may be carried out in any U.S. waters except Chesapeake Bay.

A total of $150,000 is available for this activity in FY1998; support will be made available at the same level in FY1999 and FY2000 if funds are appropriated. Proposals may request up to three years of funding; the second and third years of funding are contingent upon availability of funds and submission of an annual report showing satisfactory progress. Project activities may be phased in and should include identified milestones for each project year. Proposals may request up to the full $150,000; matching funds are encouraged, but not required. For proposals submitted under this program area only, indirect costs may not exceed 15% of direct costs.

III. Eligibility

Applications requesting support under the ''Regional Research and Outreach to Prevent and Control Nonindigenous Species Invasions in Marine Environments'' program area are restricted to universities and non-Federal research institutions. Applications requesting support under the ''Chesapeake Bay Ballast Water Management'' or ''National Ballast Water Management'' program areas may be submitted by individuals; public or private corporations, partnerships, or other associations or entities (including institutions of higher education, institutes, or non-Federal laboratories), or any State, political subdivision of a State, or agency or officer thereof.

IV. Evaluation Criteria

The evaluation criteria for proposals submitted for support under the ''Regional Research and Outreach to Prevent and Control Nonindigenous Species Invasions in Marine Environments'' program area are:

(1) Impact of proposed project (50%): Significance of the nonindigenous species problem that will be addressed; the effect this activity will have on reducing the impact of nonindigenous species on the environment and/or the economy, or the need for this activity as a necessary step toward such a reduction in impact.

(2) Scientific or Professional Merit (20%): Degree to which the activity will advance the state of the science or discipline through use and extension of state-of-the-art methods.

(3) User Relationships (15%): Degree to which potential users of the results of the proposed activity has been involved in planning the activity, will be involved in the execution of the activity, and/or are providing matching funds.

(4) Innovativeness (10%): Degree to which new approaches to solving problems and exploiting opportunities in resource management or development, or in public outreach on such issues will be employed; alternatively, the degree to which the activity will focus on new types of important or potentially important resources and issues.

(5) Qualifications and Past Record of Investigators (5%): Degree to which investigators are qualified by education, training, and/or experience to execute the proposed activity; record of achievement with previous funding.

The evaluation criteria for proposals submitted for support under the ''Chesapeake Bay Ballast Water Management'' and ''National Ballast Water Management'' program areas are:

(1) Impact of proposed project (40%): Potential effectiveness of ballast water treatment technologies or practices in reducing introductions of nonindigerous species.

(2) Field-Scale Demonstration (10%): Inclusion of a field-scale demonstration of the proposed ballast water treatment technology or practices.

(3) Scientific or Professional Merit (20%): Degree to which the activity will advance the state of the science or discipline through use and extension of state-of-the-art methods.

(4) User Relationships (15%): Degree to which potential users of the results of the proposed activity have been involved in planning the activity, will be involved in the execution of the activity, and/or are providing matching funds.

(5) Innovativeness (10%): Degree to which new approaches to solving problems and exploiting opportunities in resource management or development, or in public outreach on such issues will be employed; alternatively, the degree to which the activity will focus on new types of important or potentially important resources and issues.

(6) Qualifications and Past Record of Investigators (5%): Degree to which investigators are qualified by education, training, and/or experience to execute the proposed activity; record of achievement with previous funding.

V. Selection Procedures

All proposals will be evaluated and ranked in accordance with the assigned weights of the above evaluation criteria by one of two independent peer review panels consisting of government, academic, and industry experts; one panel will review the Regional Research Proposals and a second panel will review the Ballast Water Management proposals. These panel members will provide individual evaluations on each proposal, but there will be no consensus advice. Their recommendations and evaluations will be considered by the Program Managers in the final selection. Those proposals ranked by the panel as ''not recommended for funding'' will not be given further consideration. For the proposals rated either Excellent, Very Good or Good, the Sea Grant and USFWS Program Managers will: (a) ascertain which proposals meet the objectives, fit the criteria posted, and do not substantially duplicate other projects that are currently funded by NOAA or USFWS or are approved for funding by other federal agencies, hence, awards may not necessarily be made to the highest-scored proposals; (b) select the proposals to be funded; (c) determine which components of the selected projects will be funded; (d) determine the total duration of funding for each proposal; and (e) determine the amount of funds available for each proposal. No more than one ''Regional Research'' project will be funded from any single region, but this limit will not be applied to the ''Ballast Water'' competitions. Investigators may be asked to modify objectives, work plans,

or budgets prior to final approval of the award. Subsequent grant administration procedures will be in accordance with the individual policies of the awarding agency. A summary statement of the scientific review by the peer panel will be provided to each applicant.

VI. Instructions for Application

General Guidelines

The ideal proposal attacks a well-defined problem that will be or is a significant societal issue. The organization or people whose task it will be to make related decisions, or who will be able to make specific use of the projects results, will have been identified and contacted by the Principal Investigator(s). The project will show an understanding of what constitutes necessary and sufficient information for responsible decision-making or for applied use, and will show how that information will be provided by the proposed activity, or in concert with other planned activities.

Research projects are expected to have: a rigorous, hypothesis-based scientific work plan, or a well-defined, logical approach to address an engineering problem; a strong rationale for the proposed research; and a clear and established relationship with the ultimate users of the information. Research undertaken jointly with industry, business, or other agencies with interest in the problem will be seen as being meritorious. Their contribution to the research may be in the form of collaboration, in-kind services, or dollar support. Projects that are solely monitoring efforts are not appropriate for funding.

What To Submit

Each proposal should include the items listed below. All pages should be single- or double-spaced, typewritten in at least a 10-point font, and printed on metric A4 (210 mm x 297 mm) or 8½″ x 11″ paper. Brevity will assist reviewers and program staff in dealing effectively with proposals. Therefore, the Project Description may not exceed 15 pages. Tables and visual materials, including charts, graphs, maps, photographs and other pictorial presentations are included in the 15-page limitation. Conformance to the 15-page limitation will be strictly enforced. All information needed for review of the proposal should be included in the main text; no appendices are permitted.

(1) Signed title page: The title page should be signed by the Principal Investigator and the institutional representative and should clearly identify the program area being addressed by starting the project title with either ''Regional Research and Outreach'', ''Chesapeake Bay Ballast Water'', or ''National Ballast Water'' as appropriate. The Principal Investigator and institutional representative should be identified by full name, title, organization, telephone number and address. The total amount of Federal funds being requested should be listed for each budget period.

(2) Project Summary: This information is very important. Prior to attending the peer review panel meetings, some of the panelists may read only the project summary. Therefore, it is critical that the project summary accurately describe the research being proposed and convey all essential elements of the research. The project summary should include: 1. Title: Use the exact title as it appears in the rest of the application. 2. Investigators: List the names and affiliations of each investigator who will significantly contribute to the project. Start with the Principal Investigator. 3. Funding request for each year of the project, including matching funds if appropriate. 4. Project Period: Start and completion dates. Proposals should request a start date of October 1, 1998, or later. 5. Project Summary: This should include the rationale for the project, the scientific or technical objectives and/or hypotheses to be tested, and a brief of summary of work to be completed.

(3) Project Description (15-page limit): (a) Introduction/Background/Justification: Subjects that the investigator(s) may wish to include in this section are: a) current state of knowledge; b) contributions that the study will make to the particular discipline or subject area; and c) contributions the study will make toward addressing the problem of nonindigenous species.

(b) Research or Technical Plan: a) Objectives to be achieved, hypotheses to be tested; b) Plan of work—discuss how stated project objectives will be achieved; and c) Role of project personnel.

(c) Output: Describe the project outputs that will enhance the Nation's ability to manage and control nonindigenous species impacts.

(d) Coordination with others Program Elements: Describe any coordination with other agency programs or ongoing research efforts. Describe any other proposals that are essential to the access of this proposal.

(4) Budget and Budget Justification: There should be a separate budget for each year of the project as well as a cumulative annual budget for the entire project. Applicants are encouraged to use the Sea Grant Budget Form 90–4, but may use their own form as long as it provides the same information as the Sea Grant form. Subcontracts should have a separate budget page. Matching funds must be indicated if required; failure to provide adequate matching funds will result in the proposal being rejected without review. Applicants should provide justification for all budget items in sufficient detail to enable the reviewers to evaluate the appropriateness of the funding requested. For applications submitted for the ''Regional Research and Outreach to Prevent and Control Nonindigenous Species Invasions in Marine Environments'' and the ''Chesapeake Bay Ballast Water Management'' program areas, the total dollar amount of indirect costs must not exceed the indirect cost rate negotiated and approved by the cognizant Federal agency prior to the proposed effective date of the award or 1000 percent of the total proposed direct costs dollar amount in the application whichever is less. For proposals submitted for the ''National Ballast Water Management'' program area only, indirect costs may not exceed 15% of direct costs. The Sea Grant Budget Form 90–4 is available through the World Wide Web (www.mdsg.umd.umd.edu/NSGO/research/nonindigenous/RFP98.html) or form Dr. Leon Cammen at the National Sea Grant Office (phone: 301–713–2435 x136 or e-mail: leon.cammmen@noaa.gov).

(5) Current and Pending Support: Applicants must provide information on all current and pending support for ongoing projects and proposals, including subsequent funding in the case of continuing grants. All current project support from whatever source (e.g., Federal, State or local government agencies, private foundations, industrial or other commercial organizations) must be listed. The proposed project and all other projects or activities requiring a portion of time of the principal investigator and other senior personnel should be included, even if they receive no Federal salary support from the project(s). The number of person-months per year to be devoted to the projects must be stated, regardless of source of support. Similar information must be provided for all proposals already submitted or submitted concurrently to other possible sponsors, including those within NOAA and the USFWS.

(6) Vitae (2 pages maximum per investigator).

(7) Research Protocol (if appropriate): Research activities funded under this

program must not accelerate the spread of nonindigenous species to non-infested watersheds. Therefore, investigators whose laboratories or research study sites are in currently uninfested areas must adopt procedures for handling the particular nonindigenous species that will prevent its release into the environment. Such proposals must contain a research protocol for review by an interagency committee created under the Nonindigenous Aquatic Nuisance Prevention and Control Act of 1990 before the grant can be awarded. Guidelines for developing suitable protocols are available through the World Wide Web (www.mdsg.umd.edu/NSGO/research/nonindigenous/RFP98.html) or from Dr. Leon Cammen at the National Sea Grant Office (phone: 301–713–2435 x136 or e-mail: leon.cammen@noaa.gov). Proposals lacking a suitable protocol will not be eligible for funding.

(8) Declaration of Vessel Selection (if appropriate): Applications proposing on-board demonstrations of ballast water management should address the requirements and priorities listed in the National Invasive Species Act of 1996 for selecting vessels for demonstration projects. These requirements are available through the World Wide Web (www.mdsg.umd.edu/NSGO/research/nonindigenous/RFP98.html) or from Dr. Leon Cammen at the National Sea Grant Office (phone: 301–713–2435 x136 or e-mail: leon.cammen@noaa.gov).

(9) Standard Application Forms: Applicants may obtain all required application forms through the World Wide Web (www.mdsg.umd.edu/NSGO/research/nonindigenous/RFP98.html) or from Dr. Leon Cammen at the National Sea Grant Office (phone: 301–713–2435 x136 or e-mail: leon.cammen@noaa.gov). The following forms must be included:

(a) Standard Forms 424, Application for Federal Assistance, 424A, Budget Information—Non-Construction Programs; and 424B, Assurances—Non-Construction Programs, (Rev 4–88). Applications should clearly identify the program area being addressed by starting the project title with either ''Regional Research and Outreach'', ''Chesapeake Bay Ballast Water'', or ''National Ballast Water'' as appropriate. Please note that both the Principal Investigator and an administrative contact should be identified in Section 5 of the SF424. For Section 10, applicants for the Regional Research and Outreach to Prevent and Control Nonindigenous Species Invasions in Marine Environments and Chesapeake Bay Ballast Water Management program areas should enter ''11.417'' for the CFDA Number and ''Sea Grant Support'' for the title; applicants for the National Ballast Water Management program area should enter ''15.FFA'' for the CFDA Number and ''Fish and Wildlife Management Assistant'' for the title. The form must contain the original signature of an authorized representative of the applying institution.

(b) Primary Applicant Certifications. All primary applicants must submit a completed Form CD–511, ''Certifications Regarding Debarment, Suspension and Other Responsibility Matters; Drug-Free Workplace Requirements and Lobbying,'' and the following explanations are hereby provided:

(i) Nonprocurement Debarment and Suspension. Prospective participants (as defined at 15 CFR part 26, section 105) are subject to 15 CFR part 26, ''Nonprocurement Debarment and Suspension'' and the related section of the certification form prescribed above applies;

(ii) Drug-Free Workplace. Grantees (as defined at 15 CFR Part 26, Section 605) are subject to 15 CFR Part 26, Subpart F, ''Governmentwide Requirements for Drug-Free Workplace (Grants)'' and the related section of the certification form prescribed above applies;

(iii) Anti-Lobbying. Persons (as defined at 15 CFR Part 28, Section 105) are subject to the lobbying provisions of 31 U.S.C. 1352, ''Limitation on use of appropriated funds to influence certain Federal contracting and financial transactions,'' and the lobbying section of the certification form prescribed above applies to applications/bids for grants, cooperative agreements, and contracts for more than $100,000, and loans and loan guarantees for more than $150,000, or the single family maximum mortgage limit for affected programs, whichever is greater; and

(iv) Anti-Lobbying Disclosures. Any applicant that has paid or will pay for lobbying using any funds must submit an SF–LLL, ''Disclosure of Lobbying Activities,'' as required under 15 CFR Part 28, Appendix B.

(c) Lower Tier Certifications. Recipients shall require applicant/bidders for subgrants, contracts, subcontracts, or other lower tier covered transactions at any tier under the award to submit, if applicable, a completed Form CD–512, ''Certifications Regarding Debarment, Suspension, Ineligibility and Volumtary Exclusion-Lower Tier Covered Transactions and Lobbying'' and disclosure form, SF–LLL, ''Disclosure of Lobbying Activities.'' Form CD–512 is intended for the use of recipients and should not be transmitted to the Department of Commerce (DOC). SF–LLL submitted by any tier recipient or subrecipient should be submitted to DOC in accordance with the instructions contained in the award document.

VII. How To Submit

The original and two (2) copies of each proposal must be received in the National Sea Grant Office no later than 4:00 p.m. EDT on the closing date July 8, 1998. Although investigators are not required to submit more than 3 copies of the proposal, the normal review process requires 10 copies. Investigators are encouraged to submit sufficient proposal copies for the full review process if they wish all reviewers to receive color, unusually sized (not 8.5×11″), or otherwise unusual materials submitted as part of the proposal. Only three copies of the Federally required forms are needed. Completed applications should be sent via regular mail to: National Sea Grant Office, R/SG, Attn: Nonindigenous Species Competition, NOAA, 1315 East-West Highway, Silver Spring, MD 20910.

For express mail or courier-delivered applications, the following address must be used: National Sea Grant Office, R/SG, Attn: Nonindigenous Species Competition, NOAA, Room 11877, 1315 East-West Highway, Silver Spring, MD 20910. Phone: 301–713–2435 (for express mail applications).

Applications received after the deadline and application that deviate from the format described above will be returned to the sender without review. Fascimile transmissions and electronic mail submission of full proposals will not be accepted. If you have any questions or require further information, contact one of the agency coordinators listed above

VIII. Other Requirements

(A) Federal Policies and Procedures—Recipients and subrecipients are subject to all Federal laws and Federal, Department of Commerce (DOC), and Department of Interior (DOI) policies, regulations, and procedures applicable to Federal financial assistance awards.

(B) Past Performance—Unsatisfactory performance under prior Federal awards may result in an application not being considered for funding.

(C) Preaward Activities—If applicants incur any costs prior to an award being made, they do so solely at their own risk of not being reimbursed by the Government. Notwithstanding any verbal or written assurance that may have been received, there is no obligation on the part of DOC or DOI to cover preaward costs.

(D) No Obligation for Future Funding—If an application is selected for funding, DOC and DOI have no obligation to provide any additional future funding in connection with that award. Renewal of an award to increase funding or extend the period of performance is at the total discretion of DOC and DOI.

(E) Delinquent Federal Debts—No award of Federal funds shall be made to an applicant who has an outstanding delinquent Federal debt until either:

(1) The delinquent account is paid in full,

(2) A negotiated repayment schedule is established and at least one payment is received, or

(3) Other arrangements satisfactory to DOC or DOI are made.

(F) Name Check Review—All non-profit and for-profit applicants are subject to a name check review process. Name checks are intended to reveal if any key individuals associated with the applicant have been convicted of or are presently facing criminal charges such as fraud, theft, perjury, or other matters which significantly reflect on the applicant's management honesty or financial integrity.

(G) False Statements—A false statement on an application is grounds for denial or termination of funds and grounds for possible punishment by a fine or imprisonment as provided in 18 U.S.C. 1001.

(H) Intergovernmental Review—Applications for support from the National Sea Grant College Program are not subject to Executive Order 12372, ''Intergovernmental Review of Federal Programs. Applications for support from the U.S. Fish and Wildlife Service are subject to Executive Order 12372, ''Intergovernmental Review of Federal Programs.''

(I) Purchase of American-Made Equipment and Products—Applicants are hereby notified that they will be encouraged to the greatest extent practicable, to purchase American-made equipment and products with funding provided under this program.

IX. Classification

Prior notice and an opportunity for public comments are not required by the Administrative Procedure Act or any other law for this notice concerning grants, benefits, and contracts. Therefore, a regulatory flexibility analysis is not required for purposes of the Regulatory Flexibility Act.

This action has been determined to be not significant for purposes of E.O. 12866.

This notice contains collection of information requirements subject to the Paperwork Reduction Act. The Sea Grant Budget Form and Standard Forms 424, 424a, and 424b have been approved under control numbers 0648–0034, 0348–0043, 0348–0044, and 0348–0040 with average responses estimated to take 15, 45, 180, and 15 minutes, respectively. These estimates include the time for reviewing instructions, searching existing data sources, gathering and maintaining the data needed, and completing and reviewing the collection of information. Send comments on these estimates or any other aspect of these collections to National Sea Grant College Program, R/SG, NOAA, 1315 East-West Highway, Silver Spring, MD 20910 (Attention: Leon M. Cammen) and to the Office of Information and Regulatory Affairs, Office of Management and Budget, Washington, DC 20503 (Attention: NOAA Desk Officer). Notwithstanding any other provision of the law, no person is required to respond to, nor shall any person be subject to a penalty for failure to comply with, a collection of information subject to the requirements of the Paperwork Reduction Act, unless that collection of information displays a currently valid OMB Control Number.

Dated: May 20, 1998.

Alan R. Thomas,

Deputy Assistant Administrator, Office of Oceanic and Atmospheric Research, National Oceanic and Atmospheric Administration.

Dated: May 20, 1998.

Gary B. Edwards,

Assistant Director—Fisheries, U.S. Fish and Wildlife Service.

[FR Doc. 98–13943 Filed 5–26–98; 8:45 am]

BILLING CODE 3510–12–M

DEPARTMENT OF COMMERCE

National Oceanic and Atmospheric Administration

[I.D. 051898D]

North Pacific Fishery Management Council; Public Meetings

AGENCY: National Marine Fisheries Service (NMFS), National Oceanic and Atmospheric Administration (NOAA), Commerce.

ACTION: Notice of meetings of the North Pacific Fishery Management Council (Council) and its advisory bodies.

SUMMARY: The Council and its advisory committees will meet in Dutch Harbor, AK.

DATES: The meetings will be held during the week of June 8, 1998.

ADDRESSES: The Council and Scientific and Statistical Committee (SSC) will meet at the Grand Aleutian Hotel in Dutch Harbor, AK. The Advisory Panel (AP) will meet at the UniSea Galley Conference Room in the UniSea Central Building.

Council address: North Pacific Fishery Management Council, 605 W. 4th Ave., Suite 306, Anchorage, AK 99501–2252.

FOR FURTHER INFORMATION CONTACT: Council staff, telephone: 907–271–2809.

SUPPLEMENTARY INFORMATION: All meetings are open to the public with the exception of Council executive sessions, which may be held during the noon hour during the meeting week, if necessary, to discuss personnel, international issues, or litigation.

The SSC will meet beginning at 8:00 a.m. on Monday, June 8, continuing through at least Wednesday, June 10.

The AP will begin meeting at 8:00 a.m. on Monday, June 8, and continue through a portion of Friday, June 12.

The Council's regular plenary session will begin at 8:00 a.m. on Wednesday, June 10, and continue through a portion of Monday, June 15, 1998.

Other workgroup or committee meetings may be held during the week. Notices of these meetings will be posted at the hotel.

The agenda for the Council's plenary session will include the following issues. The Council may take appropriate action on any of the issues identified.

1. Reports from the NMFS and Alaska Department of Fish and Game (ADF&G) on the current status of the fisheries off Alaska, and enforcement reports from the U.S. Coast Guard and NMFS Enforcement.

2. Final action on allocation of pollock between inshore and offshore fisheries.

3. Final action on an amendment to the fishery management plans to incorporate essential fish habitat information as required by the Magnuson-Stevens Act Fishery Conservation and Management Act (Magnuson-Stevens Act).

4. Final action on an amendment to close a 4–mile by 4–mile area off Sitka (Cape Edgecumbe Pinnacles) to protect habitat important for juvenile rockfish and lingcod.

5. Final action on an amendment to extend the existing vessel moratorium..

6. Preliminary review of proposed amendments to the license limitation program for groundfish and crab.

7. Status report on NMFS guidelines for vessel buyback programs.

8. Final action on an amendment to roll over the current pollock community

development (CDQ) program in the Bering Sea/Aleutian Islands (BSAI), and a committee and status report on the implementation of the multispecies CDQ program.

9. Status report on the development of the joint partnership agreement for the Council's observer program and final action to extend existing program.

10. Status report on Council compliance with the Sustainable Fisheries Act.

11. Groundfish amendments scheduled for action are as follows:

a. Final action on an amendment to ban bottom trawling in the BSAI pollock fishery.

b. Final action on amendments for revised overfishing definitions for the groundfish, salmon, scallop, and BSAI king and Tanner crab fisheries.

c. Final action on an amendment to separate Atka mackerel in the BSAI by season and subarea.

d. Final action on request for experimental fishing permit.

12. Committee report from the combined Vessel Bycatch Allowance/Halibut Mortality Avoidance Program/Individual Vessel Checklist Program and further direction to staff.

Although other issues not contained in this agenda may come before this Council for discussion, in accordance with the Magnuson-Stevens Act, those issues may not be the subject of formal Council action during the meeting. Council action will be restricted to those issues specifically identified in the agenda listed in this notice.

Special Accommodations

These meetings are physically accessible to people with disabilities. Requests for sign language interpretation or other auxiliary aids should be directed to Helen Allen, 907–271–2809, at least 7 working days prior to the meeting date.

Dated: May 19, 1998.

Gary C. Matlock,

Director, Office of Sustainable Fisheries, National Marine Fisheries Service.

[FR Doc. 98–13978 Filed 5–21–98; 4:03 pm]

BILLING CODE 3510–22–F

COMMITTEE FOR THE IMPLEMENTATION OF TEXTILE AGREEMENTS

Adjustment of Import Limits for Certain Cotton and Man-Made Fiber Textiles and Textile Products Produced or Manufactured in Indonesia

May 20, 1998.

AGENCY: Committee for the Implementation of Textile Agreements (CITA).

ACTION: Issuing a directive to the Commissioner of Customs adjusting limits.

EFFECTIVE DATE: May 27, 1998.

FOR FURTHER INFORMATION CONTACT: Janet Heinzen, International Trade Specialist, Office of Textiles and Apparel, U.S. Department of Commerce, (202) 482–4212. For information on the quota status of these limits, refer to the Quota Status Reports posted on the bulletin boards of each Customs port or call (202) 927–5850. For information on embargoes and quota re-openings, call (202) 482–3715.

SUPPLEMENTARY INFORMATION:

Authority: Section 204 of the Agricultural Act of 1956, as amended (7 U.S.C. 1854); Executive Order 11651 of March 3, 1972, as amended.

The current limits for certain categories are being adjusted for special shift.

A description of the textile and apparel categories in terms of HTS numbers is available in the CORRELATION: Textile and Apparel Categories with the Harmonized Tariff Schedule of the United States (see **Federal Register** notice 62 FR 66057, published on December 17, 1997). Also see 62 FR 67625, published on December 29, 1997.

Troy H. Cribb,

Chairman, Committee for the Implementation of Textile Agreements.

Committee for the Implementation of Textile Agreements

May 20, 1998.

Commissioner of Customs,
Department of the Treasury, Washington, DC 20229.

Dear Commissioner: This directive amends, but does not cancel, the directive issued to you on December 19, 1997, by the Chairman, Committee for the Implementation of Textile Agreements. That directive concerns imports of certain cotton, wool, man–made fiber, silk blend and other vegetable fiber textiles and textile products, produced or manufactured in Indonesia and exported during the twelve-month period which began on January 1, 1998 and extends through December 31, 1998.

Effective on May 27, 1998, you are directed to adjust the limits for the categories listed below, as provided for under the Uruguay Round Agreement on Textiles and Clothing:

Category	Adjusted twelve-month limit [1]
Levels in Group I	
219	9,195,380 square meters.
313–O [2]	14,185,416 square meters.
314–O [3]	58,831,359 square meters.
315–O [4]	28,070,013 square meters.
317–O/617/326–0 [5]	25,642,902 square meters of which not more than 3,834,249 square meters shall be in 326–O.
331/631	2,011,739 dozen pairs.
338/339	1,291,007 dozen.
340/640	1,479,074 dozen.
341	912,581 dozen.
347/348	1,748,901 dozen.
350/650	118,668 dozen.
351/651	516,721 dozen.
625/626/627/628/629–O [6].	27,198,923 square meters.
638/639	1,345,321 dozen.
641	2,281,265 dozen.
647/648	3,164,825 dozen.

[1] The limit has not been adjusted to account for any imports exported after December 31, 1997.

[2] Category 313–O: all HTS numbers except 5208.52.3035, 5208.52.4035 and 5209.51.6032.

[3] Category 314–O: all HTS numbers except 5209.51.6015.

[4] Category 315–O: all HTS numbers except 5208.52.4055.

[5] Category 617; Category 317–O: all HTS numbers except 5208.59.2085; Category 326–O: all HTS numbers except 5208.59.2015, 5209.59.0015 and 5211.59.0015.

[6] Categories 625/626/627/628; Category 629–O: all HTS numbers except 5408.34.9085 and 5516.24.0085.

The Committee for the Implementation of Textile Agreements has determined that these actions fall within the foreign affairs exception to the rulemaking provisions of 5 U.S.C. 553(a)(1).

Sincerely,

Troy H. Cribb,

Chairman, Committee for the Implementation of Textile Agreements.

[FR Doc.98–13945 Filed 5–26–98; 8:45 am]

BILLING CODE 3510–DR–F

COMMITTEE FOR THE IMPLEMENTATION OF TEXTILE AGREEMENTS

Adjustment of Import Limits for Certain Cotton, Wool, Man-Made Fiber, Silk Blend and Other Vegetable Fiber Textiles and Textile Products Produced or Manufactured in Thailand.

May 20, 1998.

AGENCY: Committee for the Implementation of Textile Agreements (CITA).

ACTION: Issuing a directive to the Commissioner of Customs reducing limits.

EFFECTIVE DATE: May 27, 1998.

FOR FURTHER INFORMATION CONTACT: Ross Arnold, International Trade Specialist, Office of Textiles and Apparel, U.S. Department of Commerce, (202) 482–4212. For information on the quota status of these limits, refer to the Quota Status Reports posted on the bulletin boards of each Customs port or call (202) 927–5850. For information on embargoes and quota re-openings, call (202) 482–3715.

SUPPLEMENTARY INFORMATION:

Authority: Section 204 of the Agricultural Act of 1956, as amended (7 U.S.C. 1854); Executive Order 11651 of March 3, 1972, as amended.

The current limits for certain categories are being reduced for carryforward used.

A description of the textile and apparel categories in terms of HTS numbers is available in the CORRELATION: Textile and Apparel Categories with the Harmonized Tariff Schedule of the United States (see **Federal Register** notice 62 FR 66057, published on December 17, 1997). Also see 62 FR 65246, published on December 11, 1997.

Troy H. Cribb,

Chairman, Committee for the Implementation of Textile Agreements.

Committee for the Implementation of Textile Agreements

May 20, 1998.

Commissioner of Customs,
Department of the Treasury, Washington, DC 20229.

Dear Commissioner: This directive amends, but does not cancel, the directive issued to you on December 5, 1997, by the Chairman, Committee for the Implementation of Textile Agreements. That directive concerns imports of certain cotton, wool, man-made fiber, silk blend and other vegetable fiber textiles and textile products, produced or manufactured in Thailand and exported during the period January 1, 1998 through December 31, 1998.

Effective on May 27, 1998, you are directed to reduce the limits for the following categories, as provided for under the Uruguay Round Agreement on Textiles and Clothing:

Category	Adjusted limit [1]
Levels in Group I	
200	1,122,570 kilograms.
604	704,073 kilograms of which not more than 475,261 kilograms shall be in Category 604–A [2].
619	6,771,341 square meters.
620	6,791,544 square meters.
Sublevels in Group II	
334/634	608,167 dozen.
338/339	1,812,127 dozen.
347/348/847	785,400 dozen.
435	54,015 dozen.
638/639	2,159,202 dozen.
647/648	1,081,112 dozen.

[1] The limits have not been adjusted to account for any imports exported after December 31, 1997.

[2] Category 604–A: only HTS number 5509.32.0000.

The Committee for the Implementation of Textile Agreements has determined that these actions fall within the foreign affairs exception of the rulemaking provisions of 5 U.S.C. 553(a)(1).

Sincerely,

Troy H. Cribb,

Chairman, Committee for the Implementation of Textile Agreements.

[FR Doc. 98–13944 Filed 5–26–98; 8:45 am]

BILLING CODE 3510–DR–F

DEPARTMENT OF DEFENSE

Department of the Army

Proposed Collection; Comment Request

AGENCY: Deputy Chief of Staff for Personnel (DAPE–ZXI–RM).

ACTION: Notice.

In compliance with Section 3506(c)(2)(A) of the Paperwork Reduction Act of 1995, the Department of the Army announces a proposed public information collection and seeks public comment on the provisions thereof. Comments are invited on: (a) whether the proposed collection of information is necessary for the proper performance of the functions of the agency, including whether the information shall have practical utility; (b) the accuracy of a the agency's estimate of the burden of the proposed information collection; (c) ways to enhance the quality, utility, and clarity of the information to be collected; and (d) ways to minimize the burden of the information collection on respondents, including through the use of automated collection techniques or other forms of information technology.

DATES: Consideration will be given to all comments received by July 21, 1998.

ADDRESSES: Written comments and recommendations on the proposed information collection should be sent to U.S. Army Corps of Engineers Water Resources Support Center Navigation Data Center, (CEWRSC–NDC), 7701 Telegraph Road, Casey Building, Fort Belvoir, Virginia 22315–3868, ATTN: (Virginia R. Pankow). Consideration will be given to all comments received within 60 days of the date of publication of this notice.

FOR FURTHER INFORMATION CONTACT:

To request more information on this proposed information collection or to obtain a copy of the proposal and associated collection instruments, please write to the above address, or call Department of the Army Reports clearance officer at (703) 614–0454.

Title: Terminal and Transfer Facilities Description, WRSC Forms 1,2,3,4,5,6,7,8 and 9, OMB Control Number 0710–0007

Needs and Uses: The data complied into Port Series Reports are used within the Corps of Engineers for navigation and planning functions, by the Coast Guard for marine safety inspections, by the Navy for guidance in providing safe passage in time of national emergency, by the Army for mission deployment planning, and by the public for general reference, planning, and various studies.

Affected Public: Federal Government, State, Local or Tribal Government.

Annual Burden Hours: 372.

Number of Respondents: 1,489.

Responses Per Respondent: 1.

Average Burden Per Response: 15 minutes.

Frequency: On occasion.

SUPPLEMENTARY INFORMATION: Data gathered, and published as one of the 56 Port Series Reports, relate to terminal, transfer facilities, storage facilities, and intermodal transportation. This information is used in navigation, planning, safety, National security, emergency operations, and general interest studies and activities. Respondents are the terminal and transfer facility operators.

Gregory D. Showalter,

Army Federal Register Liaison Officer.

[FR Doc. 98–13967 Filed 5–26–98; 8:45 am]

BILLING CODE 3710–08–M

DEPARTMENT OF DEFENSE

Department of the Army

Proposed Collection; Comment Request

AGENCY: Deputy Chief of Staff for Personnel (DAPE–ZXI–RM).

ACTION: Notice.

In compliance with Section 3506(c)(2)(A) of the Paperwork Reduction Act of 1995, the Department of the Army announces a proposed public information collection and seeks public comment on the provisions thereof. Comments are invited on: (a) whether the proposed collection of information is necessary for the proper performance of the functions of the agency, including whether the information shall have practical utility; (b) the accuracy of the agency's estimate of the burden of the proposed information collection; (c) ways to enhance the quality, utility, and clarity of the information to be collected; and (d) ways to minimize the burden of the information collection on respondents, including through the use of automated collection techniques or other forms of information technology.

DATES: Consideration will be given to all comments received by July 27, 1998.

ADDRESSES: Written comments and recommendations on the proposed information collection should be sent to U.S. Army Corps of Engineers Water Resources Support Center Navigation Data Center, (CEWRSC–NDC), 7701 Telegraph Road, Casey Building, Fort Belvoir, Virginia 22315–3868, ATTN: (David E. Lichy). Consideration will be given to all comments received within 60 days of the date of publication of this notice.

FOR FURTHER INFORMATION CONTACT: To request more information on this proposed information collection or to obtain a copy of the proposal and associated collection instruments, please write to the above address, or call Department of the Army Reports clearance officer at (703) 614–0454.

Title: Lock Performance Monitoring System (PMS) Waterway Traffic Report, ENG Forms 3102C, and ENG Form 3102D, OMB Control Number 0710–0008.

Needs and Uses: The U.S. Army Corps of Engineers utilizes the data collected to monitor and analyze the use and operation of federally owned and operated locks. Owners, agents, and masters of vessels provide general data about vessels and estimated tonnage and commodities carried. The information is used for sizing and scheduling replacement or maintenance for locks and canals.

Affected Public: Business or other for-profit.

Annual Burden Hours: 30,398.

Number of Respondents: 3,000.

Responses Per Respondent: 251.2.

Average Burden Per Response: 2½ minutes.

Frequency: On occasion.

SUPPLEMENTARY INFORMATION: The data are used primarily by the Corps of Engineers in conducting a system-wide approach to planning and management of the waterway. The Headquarters, Division and District Offices use the information specifically to assist in making determinations on: adequate staffing for operations and maintenance of the navigation locks and dams; to justify the hours of locks operation; to provide a basis to justify the continued funding as set out in the President's Operation and Maintenance; General Budget; to schedule route maintenance and repairs; to serve as a basis for studies and plans for improvement; for lock operating procedures; to provide data to be used in analyses for major modifications or replacements to lock and dam structures; and to forecast the impact that lock delays, downtime, and proposed changes have on the diversion of waterborne commerce to other transportation modes.

Gregory D. Showalter,

Army Federal Register Liaison Officer.

[FR Doc. 98–13968 Filed 5–26–98; 8:45 am]

BILLING CODE 3710–08–M

DEPARTMENT OF DEFENSE

Corps of Engineers; Department of the Army

Notice of Availability of Draft Supplement II Environmental Impact Statement (DSIIEIS) and Notice of Public Hearing for a Proposed Navigation Improvement Project at Ma'alaea Harbor, Maui, HI

AGENCY: U.S. Army Corps of Engineers, DoD.

ACTION: Notice of availability and notice of public hearing.

SUMMARY: The U.S. Army Engineer District, Honolulu, in partnership with the State of Hawaii, is planning to construct improvements to the Ma'alaea Harbor for light-draft vessels at Ma'alaea, Maui, Hawaii. The Federal portion of the proposed action consists of realigning the entrance channel and modifying the existing breakwater to protect the new entrance channel. The purposes of these improvements are to reduce the surge within the harbor basin, reduce navigation hazards in the entrance channel, and provide opportunity for addition of commercial and recreational berthing spaces and associated harbor facilities. Later, the project sponsor, the State of Hawaii Department of Land and Natural Resources, Division of Boating and Ocean Recreation (DLNR–DBOR), would provide expanded berthing facilities and improved infrastructure, including fuel, sewage treatment and pumpout facilities. Total construction costs are estimated at $5,000,000 to $10,000,000.

FOR FURTHER INFORMATION CONTACT: Please address questions regarding this notice to Mr. Benton Ching, U.S. Army Corps of Engineer District, Honolulu, Attention: CEPOH–ED–CE, Building 230, Fort Shafter, Hawaii 96858–5440, Telephone (808) 438–1157 or Fax (808) 841–1581.

SUPPLEMENTARY INFORMATION: A General Design Memorandum and Final Environmental Impact Statement (EIS) were approved by the Chief of Engineers in 1980, and a State of Hawaii Revised EIS was accepted by the Governor in 1982. The 1980 and 1982 plans of improvement were modifications of the plan originally approved by Congress in 1968. A Final Supplemental EIS was prepared and circulated in 1994 to update the environmental information regarding the proposed project and alternatives. This second supplemental EIS has been prepared to provide additional information on design modifications to avoid and minimize impacts to surfing sites, coral reefs, and other aquatic habitat; to provide further evaluation of potential effects to endangered and threatened species; to provide analysis and evaluation of Alternative plan 6; and to respond to public and agency comments received on the 1994 Final Supplemental EIS. Previous and present studies indicate that the proposed project will fully achieve the Federal and State purposes. A mitigation plan developed by a team of Federal and State agencies would provide mitigation for unavoidable adverse environmental impacts, which include elimination or alteration of 8.16 acres of marine habitat, including 4.8 acres of coral reefs, removal of a small sandy beach, and removal of one surfing site.

The proposed action is consistent with Hawaii Coastal Zone Management (CZM) Program policies and objectives. The National Marine Fisheries Service and U.S. Fish and Wildlife Service have determined that the proposed action is not likely to jeopardize the continued existence of listed endangered or

threatened species. The recommendations of the U.S. Fish and Wildlife Service and Hawaii DLNR–DBOR have been considered with respect to fish and wildlife resources. The State of Hawaii Department of Health is expected to issue a Section 401 water quality certification. A preliminary evaluation pursuant to 40 CFR 230, EPA's Guidelines for the Specification of Disposal Sites for Dredged and Fill Material, concludes that the proposed action complies with those guidelines.

Comments on this Draft Supplemental II EIS (DSIIEIS) should be provided to the address below within 45 days of the date of publication of the Notice of Availability in the **Federal Register.**

Copies of the DSIIEIS are available for review at the U.S. Army Engineer District, Honolulu office in Fort Shafter, Hawaii.

A Public Hearing will be held on Tuesday, June 23, 1998 at 6:30 p.m. at Kihei Elementary School. The hearing will provide an opportunity for individuals and groups to comment on the proposed action as presented in the DSIIEIS.

Ralph H. Graves,

Lieutenant Colonel, U.S. Army, District Engineer.

[FR Doc. 98–13966 Filed 5–26–98; 8:45 am]

BILLING CODE 3710–NN–M

DEPARTMENT OF EDUCATION

Notice of Proposed Information Collection Requests

AGENCY: Department of Education.

SUMMARY: The Acting Deputy Chief Information Officer, Office of the Chief Information Officer, invites comments on the proposed information collection requests as required by the Paperwork Reduction Act of 1995.

DATES: Interested persons are invited to submit comments on or before July 27, 1998.

ADDRESSES: Written comments and requests for copies of the proposed information collection requests should be addressed to Patrick J. Sherrill, Department of Education, 600 Independence Avenue, S.W., Room 5624, Regional Office Building 3, Washington, D.C. 20202–4651.

FOR FURTHER INFORMATION CONTACT: Patrick J. Sherrill (202) 708–8196. Individuals who use a telecommunications device for the deaf (TDD) may call the Federal Information Relay Service (FIRS) at 1–800–877–8339 between 8 a.m. and 8 p.m., Eastern time, Monday through Friday.

SUPPLEMENTARY INFORMATION: Section 3506 of the Paperwork Reduction Act of 1995 (44 U.S.C. Chapter 35) requires that the Office of Management and Budget (OMB) provide interested Federal agencies and the public an early opportunity to comment on information collection requests. OMB may amend or waive the requirement for public consultation to the extent that public participation in the approval process would defeat the purpose of the information collection, violate State or Federal law, or substantially interfere with any agency's ability to perform its statutory obligations. The Acting Deputy Chief Information Officer, Office of the Chief Information Officer, publishes this notice containing proposed information collection requests prior to submission of these requests to OMB. Each proposed information collection, grouped by office, contains the following: (1) Type of review requested, e.g., new, revision, extension, existing or reinstatement; (2) Title; (3) Summary of the collection; (4) Description of the need for, and proposed use of, the information; (5) Respondents and frequency of collection; and (6) Reporting and/or Recordkeeping burden. OMB invites public comment at the address specified above. Copies of the requests are available from Patrick J. Sherrill at the address specified above.

The Department of Education is especially interested in public comment addressing the following issues: (1) is this collection necessary to the proper functions of the Department; (2) will this information be processed and used in a timely manner, (3) is the estimate of burden accurate; (4) how might the Department enhance the quality, utility, and clarity of the information to be collected, and (5) how might the Department minimize the burden of this collection on the respondents, including through the use of information technology.

Dated: May 20, 1998.

Hazel Fiers,

Acting Deputy Chief Information Officer, Office of the Chief Information Officer.

Office of Postsecondary Education

Type of Review: Revision.

Title: Student Aid Report (SAR).

Frequency: Annually.

Affected Public: Individuals or households.

Reporting and Recordkeeping Hour Burden:

Responses: 9,998,997.

Burden Hours: 4,061,953.

Abstract: The Student Aid Report (SAR) is used to notify all applicants of their eligibility to receive Federal student aid for postsecondary education. The form is submitted by the applicant to the institution of their choice.

[FR Doc. 98–13941 Filed 5–26–98; 8:45 am]

BILLING CODE 4000–01–P

DEPARTMENT OF ENERGY

Environmental Management Site-Specific Advisory Board, Kirtland Area Office (Sandia)

AGENCY: Department of Energy.

ACTION: Notice of open meeting.

SUMMARY: Pursuant to the provisions of the Federal Advisory Committee Act (Pub. L. 92–463, 86 Stat. 770) notice is hereby given of the following Advisory Committee meeting: Environmental Management Site-Specific Advisory Board, Kirtland Area Office (Sandia).

DATES: Wednesday, June 17, 1998: 6:00 p.m.–9:00 p.m. (Mountain Daylight Time).

ADDRESSES: John Marshall Community Center, 1500 Walter SE (Room 104), Albuquerque, New Mexico.

FOR FURTHER INFORMATION CONTACT: Mike Zamorski, Acting Manager, Department of Energy Kirtland Area Office, P.O. Box 5400, Albuquerque, NM 87185 (505) 845–4094.

SUPPLEMENTARY INFORMATION:

Purpose of the Board: The purpose of the Board is to make recommendations to DOE and its regulators in the areas of environmental restoration, waste management, and related activities.

Tentative Agenda

6:00 p.m. Call to Order/Roll Call
7:00 p.m. Public Comments
7:10 p.m. Approval of Agenda
7:12 p.m. Approval of 05/17/98 Minutes
7:17 p.m. Chairperson's Report
7:20 p.m. Sandia National Laboratory's Environmental Restoration/Waste Management Presentation/Discussion
7:45 p.m. Break
7:55 p.m. Sandia National Laboratory's Environmental Restoration/Waste Management Issues Discussion
8:42 p.m. New/Other Business
8:52 p.m. Public Comments
8:58 p.m. Announcement of Next Meeting
9:00 p.m. Adjourn

A final agenda will be available at the meeting Wednesday, June 17, 1998.

Public Participation

The meeting is open to the public. Written statements may be filed with the Committee either before or after the

meeting. Individuals who wish to make oral statements pertaining to agenda items should contact Mike Zamorski's office at the address or telephone number listed above. Requests must be received 5 days prior to the meeting and reasonable provision will be made to include the presentation in the agenda. The Designated Federal Officer is empowered to conduct the meeting in a fashion that will facilitate the orderly conduct of business. Each individual wishing to make public comment will be provided a maximum of 5 minutes to present their comments.

Minutes

The minutes of this meeting will be available for public review and copying at the Freedom of Information Public Reading Room, 1E–190, Forrestal Building, 1000 Independence Avenue, SW, Washington, DC 20585 between 9:00 a.m. and 4 p.m., Monday–Friday, except Federal holidays. Minutes will also be available by writing to Mike Zamorski, Department of Energy Kirtland Area Office, P.O. Box 5400, Albuquerque, NM 87185, or by calling (505) 845–4094.

Issued at Washington, DC on May 20, 1998.

Rachel M. Samuel,

Deputy Advisory Committee Management Officer.

[FR Doc. 98–13960 Filed 5–26–98; 8:45 am]

BILLING CODE 6450–01–P

DEPARTMENT OF ENERGY

Environmental Management Site-Specific Advisory Board, Rocky Flats

AGENCY: Department of Energy.

ACTION: Notice of open meeting.

SUMMARY: Pursuant to the provisions of the Federal Advisory Committee Act (Public Law 92–463, 86 Stat. 770) notice is hereby given of the following Advisory Committee meeting: Environmental Management Site-Specific Advisory Board (EM SSAB), Rocky Flats

DATES: Thursday, June 4, 1998, 6:00 p.m.–9:30 p.m.

ADDRESS: Westminster City Hall, Lower-level Multi-purpose Room, 4800 West 92nd Avenue, Westminster, CO.

FOR FURTHER INFORMATION CONTACT: Ken Korkia, Board/Staff Coordinator, EM SSAB-Rocky Flats, 9035 North Wadsworth Parkway, Suite 2250, Westminster, CO 80021, phone: (303) 420–7855, fax: (303) 420–7579.

SUPPLEMENTARY INFORMATION:

Purpose of the Board: The purpose of the Board is to make recommendations to DOE and its regulators in the areas of environmental restoration, waste management, and related activities.

Tentative Agenda

1. The Board will consider approving a recommendation concerning reuse at the Rocky Flats Technology Site.
2. The Board will review and consider approval of a recommendation on the Rocky Flats Natural Resources Management Policy.
3. A draft recommendation will be considered on the Decommissioning Program Plan for Rocky Flats.
4. The Board will discuss a draft recommendation on the Interim Measures/Interim Remedial Action decision document for Building 886 at Rocky Flats.

Public Participation: The meeting is open to the public. Written statements may be filed with the Committee either before or after the meeting. Individuals who wish to make oral statements pertaining to agenda items should contact Ken Korkia at the address or telephone number listed above. Requests must be received 5 days prior to the meeting and reasonable provision will be made to include the presentation in the agenda. The Designated Federal Official is empowered to conduct the meeting in a fashion that will facilitate the orderly conduct of business. Each individual wishing to make public comment will be provided a maximum of 5 minutes to present their comments at the beginning of the meeting. This notice is being published less than 15 days in advance of the meeting due to programmatic issues that needed to be resolved.

Minutes: The minutes of this meeting will be available for public review and copying at the Freedom of Information Public Reading Room, 1E–190, Forrestal Building, 1000 Independence Avenue, SW, Washington, DC 20585 between 9:00 a.m. and 4 p.m., Monday-Friday, except Federal holidays. Minutes will also be available at the Public Reading Room located at the Board's office at 9035 North Wadsworth Parkway, Suite 2250, Westminster, CO 80021; telephone (303) 420–7855. Hours of operation for the Public Reading Room are 9:00 am and 4:00 pm on Monday through Friday. Minutes will also be made available by writing or calling Deb Thompson at the Board's office address or telephone number listed above.

Issued at Washington, DC on May 21, 1998.

Rachel M. Samuel,

Deputy Advisory Committee Management Officer.

[FR Doc. 98–13961 Filed 5–26–98; 8:45 am]

BILLING CODE 6450–01–P

DEPARTMENT OF ENERGY

Federal Energy Regulatory Commission

[IC98–521–000 FERC–521]

Proposed Information Collection and Request for Comments

May 20, 1998.

AGENCY: Federal Energy Regulatory Commission.

ACTION: Notice of proposed information collection and request for comments.

SUMMARY: In compliance with the requirements of Section 3506(c)(2)(a) of the Paperwork Reduction Act of 1995 (Pub. L. No. 104–13), the Federal Energy Regulatory Commission (Commission) is soliciting public comment on the specific aspects of the information collection described below.

DATES: Consideration will be given to comments submitted on or before July 27, 1998.

ADDRESSES: Copies of the proposed collection of information can be obtained from and written comments may be submitted to the Federal Energy Regulatory Commission, Attn: Michael Miller, Information Services Division, CI–1, 888 First Street NE, Washington, DC 20426.

FOR FURTHER INFORMATION CONTACT: Michael Miller may be reached by telephone at (202) 208–1415, by fax at (202) 273–0873, and by e-mail at michael.miller@ferc.fed.us.

SUPPLEMENTARY INFORMATION: The information collected under the requirements of FERC–521 ''Payments for Benefits from Headwater Benefits'' (OMB No. 1902–0087) is used by the Commission to implement the statutory provisions of Section 10(f) of the Federal Power Act (FPA) (16 U.S.C. 803). The owners of non-federal hydropower projects that directly benefit from a headwater(s) improvement must pay an equitable portion of the annual charges for interest, maintenance, and depreciation of the headwater project to the U.S. Treasury. The regulations provide for apportionment of these costs between the headwater project and downstream projects based on downstream energy gains and proposed equitable apportionment methodology that can be applied to all river basins in which headwater improvements are built. Section 10(f) of the EPA directs the Commission to determine the benefits downstream parties receive from the operation of storage reservoirs or other headwater improvements. The purpose of determining the benefits is for

assessing the downstream beneficiaries for a part of the annual costs for the headwater project.

The date the Commission requires owners of non-federal hydropower projects to file for determining annual charges is specified in 18 Code of Federal Regulations (CFR) part 11.

Action: The Commission is requesting a three-year extension of the current expiration date, with no changes to the existing collection of data.

Burden Station: Public reporting burden for this collection is estimated as:

Number of respondents annually (1)	Number of responses per respondent (2)	Average burden hours per response (3)	Total annual burden hours (1)×(2)×(3)
15	1	40	600

The estimated total cost to respondents is $33,716 (840 hours divided by 2,088 hours per year per employee times $110,000 per year per average employee = $33,716). The cost per respondent is $2,248.

The reporting burden includes the total time, effort, or financial resources expended to generate, maintain, retain, disclose, or provide the information including: (1) reviewing instructions; (2) developing, acquiring, installing, and utilizing technology and systems for the purposes of collecting, validating, verifying, processing, maintaining, disclosing and providing information; (3) adjusting the existing ways to comply with any previously applicable instructions and requirements; (4) training personnel to respond to a collection of information; (5) searching data sources; (6) completing and reviewing the collection of information; and (7) transmitting, or otherwise disclosing the information.

The estimate of cost for respondents is based upon salaries for professional and clerical support, as well as direct and indirect overhead costs. Direct costs include all costs directly attributable to providing this information, such as administrative costs and the cost for information technology. Indirect or overhead costs are costs incurred by an organization in support of its mission. These costs apply to activities which benefit the whole organization rather than any one particular function or activity.

Comments are invited on: (1) whether the proposed collection of information is necessary for the proper performance of the functions of the Commission, including whether the information will have practical utility; (2) the accuracy of the agency's estimate of the burden of the proposed collection of information, including the validity of the methodology and assumptions used; (3) ways to enhance the quality, utility and clarity of the information to be collected; and (4) ways to minimize the burden of the collection of information on those who are to respond, including the use of appropriate automated, electronic, mechanical, or other technological collection techniques or other forms of information technology *e.g.*, permitting electronic submission of responses.

David P. Boergers,

Acting Secretary.

[FR Doc. 98–13931 Filed 5–26–98; 8:45 am]

BILLING CODE 6717–01–M

DEPARTMENT OF ENERGY

Federal Energy Regulatory Commission

[IC98–80–000 FERC–Form 80]

Proposed Information Collection and Request for Comments

May 20, 1998.

AGENCY: Federal Energy Regulatory Commission.

ACTION: Notice of proposed information collection and request for comments.

SUMMARY: In compliance with the requirements of Section 3506(c)(2)(a) of the Paperwork Reduction Act of 1995 (Pub. L. No. 104–13), the Federal Energy Regulatory Commission (Commission) is soliciting public comment on the specific aspects of the information collection described below.

DATES: Consideration will be given to comments submitted on or before July 27, 1998.

ADDRESSES: Copies of the proposed collection of information can be obtained from and written comments may be submitted to the Federal Energy Regulatory Commission, Attn: Michael Miller, Information Services Division, CI–1, 888 First Street N.E., Washington, D.C. 20426.

FOR FURTHER INFORMATION CONTACT: Michael Miller may be reached by telephone at (202) 208–1415, by fax at (202) 273–0873, and by e-mail at michael.miller@ferc.fed.us.

SUPPLEMENTARY INFORMATION: The information collected under the requirements of FERC Form 80 ''Licensed Hydropower Development Recreation Report'' (OMB No. 1902–0106) is used by the Commission to implement the statutory provisions of Sections 4(a), 10(a), 301(a), 304 and 309 of the Federal Power Act (FPA) (16 U.S.C. §§ 797, 803, 825, 825(c) and 825(h)). FERC Form 80 is a report on use and development of recreational facilities at FERC-licensed hydroelectric projects filed on April 1 of every sixth year. The data submitted is compiled during the previous calendar year. Commission staff utilize FERC Form 80 data to analyze the adequacy of existing pubic recreational facilities and for predicting the need for future development at licensed projects. When there are applications for amendment to license and/or for changes in land rights that involve changes in recreational resources, Commission staff rely on current FERC Form 80 data for determining the impact of such changes. The Commission's Regional Office staff inspect licensed projects to evaluate compliance with various license conditions, including those related to recreation. The authority for the Commission to collect this information comes from Section 10(a) of the FPA that requires the Commission to ensure that any hydro project it approves be best adapted to a comprehensive plan for developing a waterway for the benefit of interstate and foreign commerce and for improving or utilizing waterpower development, including recreation and other beneficial public uses. To further these objectives, the Commission requires licensees to take reasonable efforts to inform the public of the availability of project lands and waters for recreational purposes and license conditions of interest to members of the public interested in recreational aspects of the project. The data required to be filed is specified by 18 Code of Federal Regulations (CFR) Sections 8.11 and 141.14.

Action: The Commission is requesting a three-year extension of the current expiration date, with no changes to the existing collection of data.

Burden Statement: Public reporting for the collection is estimated as:

Number of respondents annually (1)	Number of responses per respondent (2)	Average burden hours per response (3)	Total annual burden hours (1)×(2)×(3)
200	1	3	1,200

The estimated total cost to respondents is $63,218, (1,200 hours divided by 2,088 hours per year per employee times $110,000 per year per average employee=$63,218). The cost per respondent is $158.00.

The reporting burden includes the total time, effort, or financial resources expended to generate, maintain, retain, disclose, or provide the information including: (1) reviewing instructions; (2) developing, acquiring, installing, and utilizing technology and systems for the purposes of collecting, validating, verifying, processing, maintaining, disclosing and providing information; (3) adjusting the existing ways to comply with any previously applicable instructions and requirements; (4) training personnel to respond to a collection of information; (5) searching data sources; (6) completing and reviewing the collection of information; and (7) transmitting, or otherwise disclosing the information.

The estimate of cost for respondents is based upon salaries for professional and clerical support, as well as direct and indirect overhead costs. Direct costs include all costs directly attributable to providing this information, such as administrative costs and the cost for information technology. Indirect or overhead costs are costs incurred by an organization in support of its mission. These costs apply to activities which benefit the whole organization rather than any one particular function or activity.

Comments are invited on: (1) whether the proposed collection of information is necessary for the Commission to perform its functions properly, including whether the information will have practical utility; (2) the accuracy of the agency's estimate of the burden of the proposed collection of information, including the validity of the methodology and assumptions used; (3) ways to enhance the quality, utility and clarity of the information to be collected; and (4) ways to minimize the burden of collecting the information on those who must respond, including the use of appropriate automated, electronic, mechanical, or other technological collection techniques or other forms of information technology, *e.g.*, permitting electronic submission of responses.

David P. Boergers,

Acting Secretary.

[FR Doc. 98–13932 Filed 5–26–98; 8:45 am]

BILLING CODE 6717–01–M

DEPARTMENT OF ENERGY

Federal Energy Regulatory Commission

[Docket No. ER98–2305–000]

Edgar Electric Cooperative Association d/b/a EnerStar Power Corp.; Notice of Issuance of Order

May 20, 1998.

Edgar Electric Cooperative Association d/b/a EnerStar Power Corp. (EnerStar) filed an application for authorization to engage in the wholesale sale of capacity and energy at market-based rates, and for certain waivers and authorizations. In particular, EnerStar requested that the Commission grant blanket approval under 18 CFR Part 34 of all future issuances of securities and assumptions of liabilities by EnerStar. On May 14, 1998, the Commission issued an Order Accepting For Filing Proposed Market-Based Rates And Granting Waiver Of Notice Requirement (Order), in the above-docketed proceeding.

The Commission's May 14, 1998 Order granted the request for blanket approval under Part 34, subject to the conditions found in Ordering Paragraphs (C), (D), and (F):

(C) Within 30 days of the date of issuance of this order, any person desiring to be heard or to protest the Commission's blanket approval of issuances of securities or assumptions of liabilities by EnerStar should file a motion to intervene or protest with the Federal Energy Regulatory Commission, 888 First Street, NE, Washington, DC 20426, in accordance with Rules 211 and 214 of the Commission's Rules of Practice and Procedure, 18 CFR 385.211 and 385.214.

(D) Absent a request to be heard within the period set forth in Ordering Paragraph (C) above, EnerStar is hereby authorized to issue securities and assume obligations and liabilities as guarantor, indorser, surety or otherwise in respect of any security of another person; provided that such issue or assumption is for some lawful object within the corporate purposes of EnerStar, compatible with the public interest, and reasonably necessary or appropriate for such purposes.

(F) The Commission reserves the right to modify this order to require a further showing that neither public nor private interests will be adversely affected by continued Commission approval of EnerStar's issuances of securities or assumptions of liabilities * * *.

Notice is hereby given that the deadline for filing motions to intervene or protests, as set forth above, is June 15, 1998.

Copies of the full text of the Order are available from the Commission's Public Reference Branch, 888 First Street, NE, Washington, DC 20426.

David P. Boergers,

Acting Secretary.

[FR Doc. 98–13934 Filed 5–26–98; 8:45 am]

BILLING CODE 6717–01–M

DEPARTMENT OF ENERGY

Federal Energy Regulatory Commission

[Docket No. ER98–2259–000]

LSP Energy Limited Partnership; Notice of Issuance of Order

May 20, 1998.

LSP Energy Limited Partnership (LSP Energy) filed an application for authorization to engage in wholesale power sales at market-based rates, and for certain waivers and authorizations. In particular, LSP Energy requested that the Commission grant blanket approval under 18 CFR Part 34 of all future issuances of securities and assumptions of liabilities by LSP Energy. On May 14, 1998, the Commission issued an Order Accepting For Filing Market-Based Rates (Order), in the above-docketed proceeding.

The Commission's May 14, 1998 Order granted the request for blanket approval under Part 34, subject to the conditions found in Ordering Paragraphs (C), (D), and (F):

(C) Within 30 days of the date of issuance of this order, any person desiring to be heard or to protest the Commission's blanket approval of issuances of securities or assumptions of

liabilities by LSP Energy should file a motion to intervene or protest with the Federal Energy Regulatory Commission, 888 First Street, N.E., Washington, D.C. 20426, in accordance with Rules 211 and 214 of the Commission's Rules of Practice and Procedure, 18 CFR 385.211 and 385.214.

(D) Absent a request to be heard within the period set forth in Ordering Paragraph (C) above, LSP Energy is hereby authorized to issue securities and assume obligations and liabilities as guarantor, indorser, surety or otherwise in respect of any security of another person; provided that such issue or assumption is for some lawful object within the corporate purposes of LSP Energy, compatible with the public interest, and reasonably necessary or appropriate for such purposes.

(F) The Commission reserves the right to modify this order to require a further showing that neither public nor private interests will be adversely affected by continued Commission approval of LSP Energy's issuances of securities or assumptions of liabilities * * *.

Notice is hereby given that the deadline for filing motions to intervene or protests, as set forth above, is June 15, 1998.

Copies of the full text of the Order are available from the Commission's Public Reference Branch, 888 First Street, N.E., Washington, D.C. 20426.

David P. Boergers,

Acting Secretary.

[FR Doc. 98–13935 Filed 5–26–98; 8:45 am]

BILLING CODE 6717–01–M

DEPARTMENT OF ENERGY

Federal Energy Regulatory Commission

[Docket No. CP98–543–000]

NorAm Gas Transmission Company; Notice of Request Under Blanket Authorization

May 20, 1998.

Take notice that on May 13, 1998, NorAm Gas Transmission Company (NGT), 1111 Louisiana, Houston, Texas 77002, filed in Docket No. CP98–543–000, a request, pursuant to Sections 157.205 and 157.211 of the Commission's Regulations under the Natural Gas Act (18 CFR 157.205 and 157.211), for authorization to operate certain facilities in Arkansas and Oklahoma, under NGT's blanket certificate authorization issued in Docket Nos. CP82–384–000 and CP82–384–001, pursuant to Section 7 of the Natural Gas Act, all as more fully set forth in the request which is on file with the Commission and open to public inspection.

Specifically, NGT requests authority at the request of ARKLA, a distribution division of NorAm Energy Corp. (ARKLA) to operate ten (10) existing taps for delivery of natural gas to ARKLA for resale to consumers other than the right-of-way grantors for whom the taps were originally installed. NGT relates that the volume through these taps range from 1 MMBtu to 200 MMBtu per day. NGT has attached in Exhibit Z to its application which is an excerpt from NGT's 1997 annual report which identifies the location and size of each of the ten taps to be certificated. NGT states there will be no new construction.

NGT states that this change is not prohibited by its tariff and that it has sufficient capacity to accomplish the deliveries specified without detriment or disadvantage to its other customers.

Any person or the Commission's staff may, within 45 days after issuance of the instant notice by the Commission, file with the Federal Energy Regulatory Commission, 888 First Street, N.E., Washington, D.C. 20426, pursuant to Rule 214 of the Commission's Procedural Rules (18 CFR 385.214) a motion to intervene or notice of intervention and pursuant to Section 157.205 of the Regulations under the Natural Gas Act (18 CFR 157.205) a protest to the request. If no protest is filed within the time allowed therefore, the proposed activity shall be deemed to be authorized effective the day after the time allowed for filing a protest.

If a protest is filed and not withdrawn within 30 days after the time allowed for filing a protest, the instant request shall be treated as an application for authorization pursuant to Section 7 of the Natural Gas Act.

David P. Boergers,

Acting Secretary.

[FR Doc. 98–13930 Filed 5–26–98; 8:45 am]

BILLING CODE 6717–01–M

DEPARTMENT OF ENERGY

Federal Energy Regulatory Commission

[Docket No. CP98–537–000]

Northern Natural Gas Company; Notice of Request Under Blanket Authorization

May 20, 1998.

Take notice that on May 12, 1998, Northern Natural Gas Company (Northern), 1111 South 103rd Street, Omaha, Nebraska 68124–1000, filed in Docket No. CP98–537–000 a request pursuant to Sections 157.205 and 157.216 of the Commission's Regulations under the Natural Gas Act (18 CFR 157.205 and 157.216) for authorization to downsize two existing small volume measurement stations located in Webster and Boone Counties, Iowa. Northern makes such request under its blanket certificate issued in Docket No. CP82–401–000 pursuant to Section 7 of the Natural Gas Act, all as more fully set forth in the request on file with the Commission and open to public inspection.

Northern states that it currently provides natural gas deliveries to Utilicorp, Inc. (UCU) at the Dennis Amman and David Junck farm taps, located in Webster and Boone Counties, for ultimate delivery to UCU's end users. It is indicated that the taps have, for over a year, been providing natural gas for home use only as compared to dryer bin usage in the past. Northern states that because the delivered gas' end use was changed, the pressure required and the gas volumes delivered to those farm taps, have been significantly lower than when the taps were originally installed. Northern is therefore, requesting authorization to downsize the Dennis Amman and David Junck farm taps, by installing a smaller meter and regulator, in order to maintain a lower delivery pressure and increase measurement accuracy of natural gas deliveries to UCU, for ultimate delivery to its small volume customers.

Northern avers that deliveries of the estimated volumes to UCU at the downsized Dennis Amman and David Junck will be made pursuant to Northern's currently effective throughout service agreement(s) with UCU. The estimated cost to install the downsized facilities is $1,200. and Northern states that the facilities will be financed in accordance with the General Terms and Conditions of Northern's FERC Gas Tariff, Fifth Revised Volume No. 1.

Any person or the Commission's staff may, within 45 days after issuance of the instant notice by the Commission, file pursuant to Rule 214 of the Commission's Procedural Rules (18 CFR 385.214) a motion to intervene or notice of intervention and pursuant to Section 157.205 of the Regulations under the Natural Gas Act (18 CFR 157.205) a protest to the request. If no protest is filed within the time allowed therefor, the proposed activity shall be deemed to be authorized effective the day after the time allowed for filing a protest. If a protest is filed and not withdrawn within 30 days after the time allowed for filing a protest, the instant request shall be treated as an application for

authorization pursuant to Section 7 of the Natural Gas Act.

David P. Boergers,

Acting Secretary.

[FR Doc. 98–13929 Filed 5–26–98; 8:45 am]

BILLING CODE 6717–01–M

DEPARTMENT OF ENERGY

Federal Energy Regulatory Commission

[Docket No. CP98–532–000]

Tennessee Gas Pipeline Company; Notice of Request Under Blanket Authorization

May 20, 1998.

Take notice that on May 11, 1998, Tennessee Gas Pipeline Company (Tennessee), P.O. Box 2511, Houston, Texas 77252, filed in Docket No. CP98–532–000 a request pursuant to Sections 157.205 and 157.212 of the Commission's Regulations (18 CFR 157.205, 157.212) under the Natural Gas Act (NGA) for authorization to construct and operate a new delivery point in Essex County, Massachusetts, for deliveries to Wakefield Municipal Light Department (Wakefield), under Tennessee's blanket certificate issued in Docket No. CP 82–413–000, pursuant to Section 7 of the NGA, all as more fully set forth in the request that is on file with the Commission and open to public inspection.

Tennessee proposes to construct and operate delivery point facilities consisting of a 3-inch hot tap and electronic gas measurement facilities. Tennessee states that Wakefield will construct 1,270 feet of interconnecting pipeline and a meter, and that Tennessee will inspect these facilities. Tennessee proposes to use the facilities to deliver up to 4,567 dt equivalent of natural gas per day to Wakefield under Tennessee's Rate Schedule IT. The cost of the facilities is estimated at $66,059, for which, it is stated, Tennessee will be reimbursed by Wakefield. It is asserted that the total quantities to be delivered to Wakefield will not exceed the total quantities authorized prior to this request. It is further asserted that Tennessee's tariff does not prohibit the addition of new delivery points and that Tennessee has sufficient capacity to accomplish the deliveries without detriment or disadvantage to its other customers.

Any person or the Commission's staff may, within 45 days after issuance of the instant notice by the Commission, file pursuant to Rule 214 of the Commission's Procedural Rules (18 CFR 385.214) a motion to intervene or notice of intervention and pursuant to Section 157.205 of the Regulations under the Natural Gas Act (18 CFR 157.205) a protest to the request. If no protest is filed within the time allowed therefor, the proposed activity shall be deemed to be authorized effective the day after the time allowed for filing a protest. If a protest is filed and not withdrawn within 30 days after the time allowed for filing a protest, the instant request shall be treated as an application for authorization pursuant to Section 7 of the Natural Gas Act.

David P. Boergers,

Acting Secretary.

[FR Doc. 98–13928 Filed 5–26–98; 8:45 am]

BILLING CODE 6717–01–M

DEPARTMENT OF ENERGY

Federal Energy Regulatory Commission

[Docket No. ER98–2973–000]

Williams Energy Services Company; Notice of Filing

May 20, 1998.

Take notice that on May 12, 1998, Williams Energy Services Company filed an Amendment to the Alamitos and Redondo Beach Generating Station Must Run Agreement adopting such Agreement as WESCO's Rate Schedule. Pursuant to such Agreement, sales are made to the California Independent System Operator at regulated rates now in effect subject to refund pending the outcome of a hearing in Docket No. ER98–441–000.

Any person desiring to be heard or to protest said filing should file a motion to intervene or protest with the Federal Energy Regulatory Commission, 888 First Street, NE., Washington, DC 20426, in accordance with the Rules 211 and 214 of the Commission's Rules of Practice and Procedure (18 CFR 385.211 and 18 CFR 385.214). All such motions or protests should be filed on or before June 1, 1998. Protests will be considered by the Commission in determining the appropriate action to be taken, but will not serve to make protestants parties to the proceeding. Any person wishing to become a party must file a motion to intervene. Copies of this filing are on file with the Commission and are available for public inspection.

Linwood A. Watson, Jr.,

Acting Secretary.

[FR Doc. 98–13933 Filed 5–26–98; 8:45 am]

BILLING CODE 6717–01–M

DEPARTMENT OF ENERGY

Federal Energy Regulatory Commission

[Docket No. EG98–73–000, et al.]

Orzunil I de Electricidad, Limitada, et al.; Electric Rate and Corporate Regulation Filings

May 18, 1998.

Take notice that the following filings have been made with the Commission:

1. Orzunil I de Electricidad, Limitada

[Docket No. EG98–73–000]

Take notice that on May 6, 1998, Orzunil I de Electricidad, Limitada (Orzunil), located at 8a Calle 3–14, Zona 10, Guatemala City, Guatemala 01010, filed with the Federal Energy Regulatory Commission (the Commission) an application for determination of exempt wholesale generator status pursuant to Part 365 of the Commission's Regulations.

Orzunil will directly or indirectly and exclusively develop, own and operate an electric generating facility, to be located in the province of Quetzaltenango, Guatemala, and will sell electricity at wholesale or exclusively in markets outside of the United States. The electric generating facility will be a geothermal power plant whose primary components are Ormat energy converters (consisting of a turbogenerator, heat exchanger, air-cooled condenser, organic motive fluid piping and control and power system), auxiliary equipment and appurtenant facilities necessary to interconnect the electric generating facility to the transmission facilities of the purchaser. The facility will have a nominal generating capacity of 24 MW net.

Comment date: June 8, 1998, in accordance with Standard Paragraph E at the end of this notice. The Commission will limit its consideration of comments to those that concern the adequacy or accuracy of the application.

2. Southwestern Public Service Company v. El Paso Electric Company

[Docket No. EL98–44–000]

Take notice that on April 29, 1998, Southwestern Public Service Company (SPS), submitted for filing, a complaint against El Paso Electric Company (EPE), seeking an order from the Commission requiring EPE to provide firm transmission service to SPS.

Comment date: June 12, 1998, in accordance with Standard Paragraph E at the end of this notice. Answers to the complaint shall be due on or before June 12, 1998.

3. Laguna Irrigation District

[Docket No. EL98–46–000]

Take notice that on May 6, 1998, Laguna Irrigation District tendered for filing an Application for an order Directing the Establishment of Physical Interconnection of Facilities Pursuant to Sections 202 and 210 of the Federal Power Act and Part 32 of the Commission's Regulation, 18 CFR 32. The application seeks an order requiring Pacific Gas and Electric Company to interconnect its transmission system with Laguna's 12 kV distribution system at points identified in Laguna's application.

Laguna also seeks an order requiring Pacific Gas and Electric Company to file an interconnection agreement or electric tariff establishing just and reasonable terms, conditions and charges under which such interconnection shall be operated and maintained.

Comment date: June 15, 1998, in accordance with Standard Paragraph E at the end of this notice.

4. Allegheny Power Service Corp., on behalf of Monongahela Power Co., The Potomac Edison Company, and West Penn Power Company (Allegheny Power)

[Docket No. ER98–1434–001]

Take notice that on May 13, 1998, Allegheny Power Service Corporation on behalf of Monongahela Power Company, The Potomac Edison Company and West Penn Power Company (Allegheny Power), submitted a revised amendment to its Standard Generation Service Rate Schedule to comply with the Commission directives in an order issued on May 5, 1998, in Docket No. ER98–1434–000.

Copies of the filing have been provided to the Public Utilities Commission of Ohio, the Pennsylvania Public Utility Commission, the Maryland Public Service Commission, the Virginia State Corporation Commission, the West Virginia Public Service Commission, and all parties of record.

Comment date: June 2, 1998, in accordance with Standard Paragraph E at the end of this notice.

5. Conectiv Energy Supply, Inc.

[Docket No. ER98–2045–001]

Take notice that on May 13, 1998, Conectiv Energy Supply, Inc., tendered for filing its compliance filing in the above-referenced docket.

Comment date: June 2, 1998, in accordance with Standard Paragraph E at the end of this notice.

6. Florida Power & Light Company

[Docket No. ER98–2746–000]

Take notice that on May 11, 1998, Florida Power & Light Company (FPL), submitted for filing a supplement to the filing that FPL initially had made in this docket on April 30, 1998.

Comment date: June 1, 1998, in accordance with Standard Paragraph E at the end of this notice.

7. Northern Indiana Public Service Company

[Docket No. ER98–2849–000]

Take notice that on April 29, 1998, Northern Indiana Public Service Company tendered for filing its Transaction Report for short-term transactions for the first quarter of 1998 pursuant to the Commission's order issued January 10, 1997 in Northern Indiana Public Service Company, 78 FERC ¶ 61,015 (1997).

Comment date: June 1, 1998, in accordance with Standard Paragraph E at the end of this notice.

8. American Electric Power Service Corporation

[Docket No. ER98–2859–000]

Take notice that on May 1, 1998, the American Electric Power Service Corporation (AEPSC), tendered for filing a report for the first quarter of 1998 summarizing the transactions under the Wholesale Market Tariff of the AEP Operating Companies (Power Sales Tariff). The Power Sales Tariff was accepted for filing effective October 10, 1997 and has been designated AEP Operating Companies FERC Electric Tariff Original Volume No. 5.

A copy of the filing was served upon the Parties and the State Utility Regulatory Commissions of Indiana, Kentucky, Michigan, Ohio, Tennessee, Virginia and West Virginia.

Comment date: June 1, 1998, in accordance with Standard Paragraph E at the end of this notice.

9. PP&L, Inc.

[Docket No. ER98–2869–000]

Take notice that on May 1, 1998, PP&L, Inc., filed a summary of activity conducted under its market-based rates tariff, FERC Electric Tariff, Original Volume No. 5, during the quarter ending March 31, 1998.

Comment date: June 1, 1998, in accordance with Standard Paragraph E at the end of this notice.

10. Tucson Electric Power Company

[Docket No. ER98–2872–000]

Take notice that on April 30, 1998, Tucson Electric Power Company (Tucson), tendered for filing a Transaction Report regarding power purchases and sales under its Market-Based Power Sales Tariff for quarter ended March 31, 1998.

Comment date: June 1, 1998, in accordance with Standard Paragraph E at the end of this notice.

11. Commonwealth Edison Company

[Docket No. ER98–2873–000]

Take notice that on April 30, 1998, Commonwealth Edison Company (Edison), submitted its quarterly market-based transaction report for the calendar quarter ending March 31, 1998.

Comment date: June 1, 1998, in accordance with Standard Paragraph E at the end of this notice.

12. Central and South West Services, Inc.

[Docket No. ER98–2874–000]

Take notice that on April 30, 1998, Central and South West Services, Inc., as agent for Central Power and Light Company, West Texas Utilities Company, Public Service Company of Oklahoma, and Southwestern Electric Power Company (collectively, the CSW Operating Companies), submitted a quarterly report under the CSW Operating Companies' market-based sales tariff. The report is for the period January 1, 1998 through March 31, 1998.

Comment date: June 1, 1998, in accordance with Standard Paragraph E at the end of this notice.

13. Niagara Mohawk Power Corporation

[Docket No. ER98–2924–000]

Take notice that on May 7, 1998, Niagara Mohawk Power Corporation (Niagara Mohawk), tendered for filing its Quarterly Sales and Services Summary as required by the Commission's Order dated September 25, 1996 in Docket No. ER96–2585–000. A copy of the filing has been served on the Public Service Commission of the State of New York.

Comment date: June 2, 1998, in accordance with Standard Paragraph E at the end of this notice.

14. Williams Energy Services Company

[Docket No. ER98–2973–000]

Take notice that on May 12, 1998, Williams Energy Services Company filed an Amendment to the Huntington Beach Generating Station Must Run Agreement adopting such Agreement as WESCO's Rate Schedule. Pursuant to such Agreement, sales are made to the California Independent System Operator at regulated rates now in effect subject to refund pending the outcome of a hearing in Docket No. ER98–441–000.

Comment date: June 1, 1998, in accordance with Standard Paragraph E at the end of this notice.

15. Ocean Vista Power Generation, L.L.C., Mountain Vista Power Generation, L.L.C., Alta Power Generation, L.L.C., Oeste Power Generation, L.L.C., Ormond Beach Power Generation, L.L.C.

[Docket No. ER98–2977–000]

Take notice that on May 13, 1998, Ocean Vista Power Generation, L.L.C. (Ocean Vista), Mountain Vista Power Generation, L.L.C. (Mountain Vista), Alta Power Generation, L.L.C. (Alta Power), Oeste Power Generation, L.L.C. (Oeste Power), and Ormond Beach Power Generation, L.L.C. (Ormond Beach) (collectively, the Applicants) filed with the Federal Energy Regulatory Commission an Application for Authority to Sell Specific Ancillary Services at Market-Based Rates and Request for Expedited Consideration. Included as part of the Application are proposed revised market-based Rate Schedules for each of these companies to provide for the sale at market-based rates of four ancillary services: Regulation, Spinning Reserve, Non-Spinning Reserve, and Replacement Reserve.

Applicants request waivers permitting market-based rates for these Ancillary Services to be made effective as of the date of filing for Ocean Vista, Mountain Vista, Alta Power, Oeste Power, and for Ormond Beach as of May 27, 1998 or such later date as coincides with the acquisition by Ormond Beach of the Ormond Beach generating facility from Southern California Edison.

Comment date: June 2, 1998, in accordance with Standard Paragraph E at the end of this notice.

16. California Independent System Operator Corporation

[Docket No. ER98–2978–000]

Take notice that on May 13, 1998, the California Independent System Operator Corporation (ISO), tendered for filing a Meter Service Agreement for Scheduling Coordinators between the ISO and the British Columbia Power Exchange Corporation (British Columbia PX) for acceptance by the Commission.

The ISO states that this filing has been served on the British Columbia PX and the California Public Utilities Commission.

Comment date: June 2, 1998, in accordance with Standard Paragraph E at the end of this notice.

17. Consolidated Edison Company of New York, Inc.

[Docket No. ER98–2979–000]

Take notice that on May 13, 1998, Consolidated Edison Company of New York, Inc. (Con Edison), tendered for filing a Supplement to its Rate Schedule FERC No. 78, an agreement to provide transmission service for the Power Authority of the State of New York (the Authority). The Supplement provides for an increase in the annual revenues under the Rate Schedule of $3,655.11. Con Edison has requested that the increase take effect on July 1, 1998.

Con Edison states that a copy of this filing has been served by mail upon the Authority.

Comment date: June 2, 1998, in accordance with Standard Paragraph E at the end of this notice.

18. Consolidated Edison Company of New York, Inc.

[Docket No. ER98–2980–000]

Take notice that on May 13, 1998, Consolidated Edison Company of New York, Inc. (Con Edison), tendered for filing a Supplement to its Rate Schedule FERC No. 60, an agreement to provide transmission service for the Power Authority of the State of New York (the Authority). The Supplement provides for an increase in the annual revenues under the Rate Schedule of $24,280.86. Con Edison has requested that the increase take effect on July 1, 1998.

Con Edison states that a copy of this filing has been served by mail upon the Authority.

Comment date: June 2, 1998, in accordance with Standard Paragraph E at the end of this notice.

19. Cinergy Services, Inc.

[Docket No. ER98–2981–000]

Take notice that on May 13, 1998, Cinergy Services, Inc. (Cinergy), tendered for filing a service agreement under Cinergy's Open Access Transmission Service Tariff (the Tariff) entered into between Cinergy and VTEC Energy (VTEC).

Cinergy and VTEC are requesting an effective date of May 12, 1998.

Comment date: June 2, 1998, in accordance with Standard Paragraph E at the end of this notice.

20. Cinergy Services, Inc.

[Docket No. ER98–2982–000]

Take notice that on May 13, 1998, Cinergy Services, Inc. (Cinergy), tendered for filing a service agreement under Cinergy's Open Access Transmission Service Tariff (the Tariff) entered into between Cinergy and Northern States Power Company (Northern).

Cinergy and Northern are requesting an effective date of May 12, 1998.

Comment date: June 2, 1998, in accordance with Standard Paragraph E at the end of this notice.

21. Tucson Electric Power Company

[Docket No. ER98–2983–000]

Take notice that on May 13, 1998, Tucson Electric Power Company (TEP), tendered for filing a short-term umbrella service agreement with Morenci Water and Electric for sales under TEP's Market-Based Power Sales Tariff, FERC Electric Tariff Original Volume No. 3.

Comment date: June 2, 1998, in accordance with Standard Paragraph E at the end of this notice.

22. Tucson Electric Power Company

[Docket No. ER98–2984–000]

Take notice that on May 13, 1998, Tucson Electric Power Company (TEP), tendered for filing one (1) non-firm umbrella transmission service agreement pursuant to Part II of TEP's Open Access Transmission Tariff, which was filed in Docket No. OA96–140–000].

The details of the service agreement are as follows: Service Agreement for Non-Firm Point-to-Point Transmission Service with Western Resources dated April 27, 1998. TEP has not yet provided transmission service under this service agreement.

Comment date: June 2, 1998, in accordance with Standard Paragraph E at the end of this notice.

23. Consolidated Edison Company of New York, Inc.

[Docket No. ER98–2985–000]

Take notice that on May 13, 1998 Consolidated Edison Company of New York, Inc. (Con Edison), tendered for filing a Supplement to its Rate Schedule FERC No. 102, an agreement to provide transmission service for the New York Power Authority (the Authority). The Supplement provides for an increase in the annual revenues under the Rate Schedule of $7,528.23. Con Edison has requested that the increase take effect on July 1, 1998.

Con Edison states that a copy of this filing has been served by mail upon the Authority.

Comment date: June 2, 1998, in accordance with Standard Paragraph E at the end of this notice.

24. Consolidated Edison Company of New York, Inc.

[Docket No. ER98–2986–000]

Take notice that on May 13, 1998, Consolidated Edison Company of New

York, Inc. (Con Edison), tendered for filing a Supplement to its Rate Schedule FERC No. 66, an agreement to provide transmission service for the Power Authority of the State of New York (the Authority). Con Edison has requested that the increase take effect on July 1, 1998.

Con Edison states that a copy of this filing has been served by mail upon the Authority.

Comment date: June 2, 1998, in accordance with Standard Paragraph E at the end of this notice.

25. Orange and Rockland Utilities, Inc.

[Docket No. ER98–2987–000]

Take notice that on May 13, 1998, Orange and Rockland Utilities, Inc. (O&R), tendered for filing pursuant to Part 35 of the Federal Energy Regulatory Commission's Rules of Practice and Procedure, 18 CFR 35, a service agreement under which O&R will provide capacity and/or energy to VTEC Energy, Inc. (VTEC Energy).

O&R requests waiver of the notice requirement so that the service agreement with VTEC Energy becomes effective as of May 5, 1998.

O&R has served copies of the filing on The New York State Public Service Commission and VTEC Energy.

Comment date: June 2, 1998, in accordance with Standard Paragraph E at the end of this notice.

26. Cinergy Services, Inc.

[Docket No. ER98–2988–000]

Take notice that on May 11, 1998, Cinergy Services, Inc. (Cinergy), tendered for filing a service agreement under Cinergy's Open Access Transmission Service Tariff (the Tariff), entered into between Cinergy and Northern States Power Company (Northern).

Cinergy and Northern are requesting an effective date of May 12, 1998.

Comment date: June 2, 1998, in accordance with Standard Paragraph E at the end of this notice.

27. Cinergy Services, Inc.

[Docket No. ER98–2989–000]

Take notice that on May 13, 1998, Cinergy Services, Inc. (Cinergy), tendered for filing a service agreement under Cinergy's Open Access Transmission Service Tariff (the Tariff), entered into between Cinergy and PP&L, Inc., (PP&L).

Cinergy and PP&L are requesting an effective date of May 12, 1998.

Comment date: June 2, 1998, in accordance with Standard Paragraph E at the end of this notice.

28. Oklahoma Gas and Electric Company

[Docket No. ER98–2990–000]

Take notice that on May 13, 1998, Oklahoma Gas and Electric Company (OG&E), tendered for filing service agreements for parties to take service under its short-term power sales agreement.

Copies of this filing have been served on each of the affected parties, the Oklahoma Corporation Commission and the Arkansas Public Service Commission.

Comment date: June 2, 1998, in accordance with Standard Paragraph E at the end of this notice.

29. Wisconsin Electric Power Company

[Docket No. ER98–2991–000]

Take notice that on May 13, 1998, Wisconsin Electric Power Company (Wisconsin Electric), tendered for filing an electric service agreement under its Coordination Sales Tariff (FERC Electric Tariff, Original Volume No. 2). Wisconsin Electric respectfully requests an effective date May 13, 1998. Wisconsin Electric is authorized to state that Northern/AES Energy, LLC joins in the requested effective date.

Copies of the filing have been served on Northern/AES Energy, LLC, the Michigan Public Service Commission, and the Public Service Commission of Wisconsin.

Comment date: June 2, 1998, in accordance with Standard Paragraph E at the end of this notice.

30. Consolidated Edison Company of New York, Inc.

[Docket No. ER98–2993–000]

Take notice that on May 12, 1998, Consolidated Edison Company of New York, Inc. (Con Edison), tendered for filing a Supplement to its Rate Schedule FERC No. 117, an agreement to provide transmission and interconnection service to Long Island Lighting Company (LILCO). The Supplement provides for an increase in annual revenues under the Rate Schedule of $105,531.88. Con Edison has requested that this increase take effect on July 1, 1998.

Con Edison states that a copy of this filing has been served by mail upon LILCO.

Comment date: June 1, 1998, in accordance with Standard Paragraph E at the end of this notice.

31. Central Vermont Public Service Corporation

[Docket No. ER98–2994–000]

Take notice that on May 12, 1998, Central Vermont Public Service Corporation tendered for filing revisions to its open access transmission tariff to include penalty provisions for failure to curtail and/or interrupt transmission service and for taking service in excess of reserved capacity.

Comment date: June 1, 1998, in accordance with Standard Paragraph E at the end of this notice.

32. Consolidated Edison Company of New York, Inc.

[Docket No. ER98–3008–000]

Take notice that on May 13, 1998 Consolidated Edison Company of New York, Inc. (Con Edison), tendered for filing a service agreement to provide non-firm transmission service pursuant to its Open Access Transmission Tariff to Scana Energy Marketing, Inc., (Scana).

Con Edison states that a copy of this filing has been served by mail upon Scana.

Comment date: June 2, 1998, in accordance with Standard Paragraph E at the end of this notice.

33. Northern States Power Company (Minnesota) and Northern States Power Company (Wisconsin)

[Docket No. ER98–3009–000]

Take notice that on May 13, 1998, Northern States Power Company (Minnesota) and Northern States Power Company (Wisconsin) (jointly NSP), tendered for filing a Non-Firm Point-to-Point Transmission Service Agreement and a Short-Term Firm Transmission Service Agreement between NSP and Cargill-Alliant, LLC.

NSP requests that the Commission accept both the agreements effective April 15, 1998, and requests waiver of the Commission's notice requirements in order for the agreements to be accepted for filing on the date requested.

Comment date: June 2, 1998, in accordance with Standard Paragraph E at the end of this notice.

34. Cinergy Services, Inc.

[Docket No. ER98–2976–000]

Take notice that on May 13, 1998, Cinergy Services, Inc., (Cinergy), tendered for filing an Interchange Agreement among the Cinergy Operating Companies and Southern Illinois Power Cooperative in the above-referenced docket. The Interchange Agreement provides for voluntary sales transactions between the parties.

Copies of the filing have been served upon Southern Illinois Power Cooperative.

Comment date: June 2, 1998, in accordance with Standard Paragraph E at the end of this notice.

Standard Paragraph

E. Any person desiring to be heard or to protest said filing should file a motion to intervene or protest with the Federal Energy Regulatory Commission, 888 First Street, N.E., Washington, D.C. 20426, in accordance with Rules 211 and 214 of the Commission's Rules of Practice and Procedure (18 CFR 385.211 and 18 CFR 385.214). All such motions or protests should be filed on or before the comment date. Protests will be considered by the Commission in determining the appropriate action to be taken, but will not serve to make protestants parties to the proceeding. Any person wishing to become a party must file a motion to intervene. Copies of these filings are on file with the Commission and are available for public inspection.

David P. Boergers,

Acting Secretary.

[FR Doc. 98–13936 Filed 5–26–98; 8:45 am]

BILLING CODE 6717–01–P

ENVIRONMENTAL PROTECTION AGENCY

[FRL–6103–2]

Agency Information Collection Activities: Proposed Collection; Comment Request; 1999 Drinking Water Infrastructure Needs Survey

AGENCY: Environmental Protection Agency (EPA).

ACTION: Notice.

SUMMARY: In compliance with the Paperwork Reduction Act (44 U.S.C. 3501 *et seq.*), this document announces that EPA is planning to submit the following proposed Information Collection Request (ICR) to the Office of Management and Budget (OMB): 1999 Drinking Water Infrastructure Needs Survey, EPA ICR # 1708.02. Before submitting the ICR to OMB for review and approval, EPA is soliciting comments on specific aspects of the proposed information collection as described below.

DATES: Comments must be submitted on or before July 27, 1998.

ADDRESSES: To obtain a copy of the ICR without charge please contact the Safe Drinking Water Hotline, (800) 426–4791. Hours of operation are 9:00 a.m. to 5:30 p.m. (ET), Monday—Friday, excluding Federal holidays. Copies are also available from the Office of Water Resource Center (RC4100), U.S. EPA Headquarters, 401 M Street SW, Washington, DC 20460.

FOR FURTHER INFORMATION CONTACT: Safe Drinking Water Hotline, (800) 426–4791, e-mail: hotline-sdwa-group@epamail.epa.gov; or Richard Naylor, (202) 260–5135, fax (202) 260–0732, e-mail: naylor.richard@epamail.epa.gov.

SUPPLEMENTARY INFORMATION: Affected entities: Entities potentially affected by this action are those which own, operate or regulate community water systems but not limited to: Owners/operators of community water systems, State Environmental Water Quality Agencies, and State Departments of Health.

Title: 1999 Drinking Water Infrastructure Needs Survey, EPA ICR # 1708.02.

Abstract: The purpose of this information collection is to identify the current and future infrastructure needs of community and nonprofit noncommunity public water systems for the 20-year period from January 1999 through December 2018. The collection will be conducted by EPA's Office of Ground Water and Drinking Water (OGWDW) in order to comply with Sections 1452(h) and 1452 (i)(4) of the Safe Drinking Water Act (SDWA) (Public Law 104–182).

The collection will involve two methods. A questionnaire will be used to collect information from large and medium community water systems. For small systems and nonprofit noncommunity water systems, data will be collected through a site visit by the EPA contractor. Questionnaires and site visit reports will be reviewed by State Needs Survey Coordinators before submission to EPA.

The data from the questionnaires and the site visits will provide EPA with a basis for estimating the drinking water infrastructure needs of community water systems for the 20-year period, January 1999 through December 2018. Furthermore, under section 1452 (a)(1)(D) of SDWA, the results of the needs survey must be used as the basis for allocating Drinking Water State Revolving Loan Fund capitalization grant funds among the States. Responses to the collection of information are voluntary.

An agency may not conduct or sponsor, and a person is not required to respond to, a collection of information unless it displays a currently valid OMB control number. The OMB control numbers for EPA's regulations are listed in 40 CFR part 9 and 48 CFR Chapter 15.

The EPA would like to solicit comments to:

(i) Evaluate whether the proposed collection of information is necessary for the proper performance of the functions of the agency, including whether the information will have practical utility;

(ii) Evaluate the accuracy of the agency's estimate of the burden of the proposed collection of information, including the validity of the methodology and assumptions used;

(iii) Enhance the quality, utility, and clarity of the information to be collected; and

(iv) Minimize the burden of the collection of information on those who are to respond, including through the use of appropriate automated electronic, mechanical, or other technological collection techniques or other forms of information technology, e.g., permitting electronic submission of responses.

Burden Statement: It is estimated that this information collection will involve a total cost burden to the Respondents of $1,533,029 and a total hour burden to the Respondents of 44,096 hours. There will be no capital, start-up or operation and maintenance costs but the collection will involve a one time response, from 4,670 respondents, of approximately 9.4 hours per respondent. Burden means the total time, effort, or financial resources expended by persons to generate, maintain, retain, or disclose or provide information to or for a Federal agency. This includes the time needed to review instructions; develop, acquire, install, and utilize technology and systems for the purposes of collecting, validating, and verifying information, processing and maintaining information, and disclosing and providing information; adjust the existing ways to comply with any previously applicable instructions and requirements; train personnel to be able to respond to a collection of information; search data sources; complete and review the collection of information; and transmit or otherwise disclose the information.

Dated: May 21, 1998.

Cynthia Dougherty,

Director, Office of Ground Water and Drinking Water.

[FR Doc. 98–13985 Filed 5–26–98; 8:45 am]

BILLING CODE 6560–50–P

ENVIRONMENTAL PROTECTION AGENCY

[FRL–6102–6]

Agency Information Collection Activities: Submission for OMB Review; Comment Request; Underground Injection Control Program

AGENCY: Environmental Protection Agency (EPA).

ACTION: Notice.

SUMMARY: In compliance with the Paperwork Reduction Act (44 U.S.C. 3501 *et seq.*), this document announces that the following Information Collection Request (ICR) has been forwarded to the Office of Management and Budget (OMB) for review and approval: Information Collection Request for the Underground Injection Control Program (OMB Control No. 2040–0042; EPA ICR No. 0370.16), expiring June 30, 1998. The ICR describes the nature of the information collection and its expected burden and cost; where appropriate, it includes the actual data collection instrument.

DATES: Comments must be submitted on or before June 26, 1998.

FOR FURTHER INFORMATION CONTACT: Contact Sandy Farmer at EPA by phone at (202) 260–2740, by E-mail at farmer.sandy@epamail.epa.gov, or download off the Internet at http://www.epa.gov/icr and refer to EPA ICR No. 370.16.

SUPPLEMENTARY INFORMATION:

Title: Information Collection Request for the Underground Injection Control Program (OMB Control No. 2040–0042; EPA ICR No. 370.16), expiring June 30, 1998. This is a request for extension of a currently approved collection.

Abstract: The Underground Injection Control (UIC) Program under the Safe Drinking Water Act established a Federal and State regulatory system to protect underground sources of drinking water from contamination by injected fluids. Owners and operators of underground injection wells must obtain permits, conduct environmental monitoring, maintain records, and report results to EPA or the State primacy Agency. States must report to EPA on permittee compliance and related information. The information is reported using standardized forms, and the regulations are codified at 40 CFR parts 144 through 148. The data is used to ensure the safety of underground sources of drinking water. An agency may not conduct or sponsor, and a person is not required to respond to, a collection of information unless it displays a currently valid OMB control number. The OMB control numbers for EPA's regulations are listed in 40 CFR part 9 and 48 CFR Chapter 15. An agency may not conduct or sponsor, and a person is not required to respond to, a collection of information unless it displays a currently valid OMB control number. The OMB control numbers for EPA's regulations are listed in 40 CFR part 9 and 48 CFR Chapter 15. The **Federal Register** document required under 5 CFR 1320.8(d), soliciting comments on this collection of information was published on February 19, 1998 (63 FR 8449). One comment was received by EPA.

Burden Statement: The annual public reporting and recordkeeping burden for this collection of information is estimated to average 2.59 hours per response. Burden means the total time, effort, or financial resources expended by persons to generate, maintain, retain, or disclose or provide information to or for a Federal agency. This includes the time needed to review instructions; develop, acquire, install, and utilize technology and systems for the purposes of collecting, validating, and verifying information, processing and maintaining information, and disclosing and providing information; adjust the existing ways to comply with any previously applicable instructions and requirements; train personnel to be able to respond to a collection of information; search data sources; complete and review the collection of information; and transmit or otherwise disclose the information.

Respondents/Affected Entities: Entities potentially affected by this action are owners and operators of underground injection wells and their States' Agencies including Puerto Rico, the U.S. Trust Territories, Indian Tribes, and Alaska's Native Villages.

Estimated Number of Respondents: 53,268.

Frequency of Response: Operators of Class I, III and some Class V wells must report monitoring results quarterly; Class II operators report annually.

Estimated Total Annual Hour Burden: 1,135,273 hours.

Estimated Total Annualized Cost Burden: $27,648,934.

Send comments on the Agency's need for this information, the accuracy of the provided burden estimates, and any suggested methods for minimizing respondent burden, including through the use of automated collection techniques to the following addresses. Please refer to EPA ICR No 2040–0042 and OMB Control No. 370.16 in any correspondence.

Ms. Sandy Farmer, U.S. Environmental Protection Agency, OPPE Regulatory Information Division (2137), 401 M Street, SW, Washington, DC 20460;

and

Office of Information and Regulatory Affairs, Office of Management and Budget, Attention: Desk Officer for EPA, 725 17th Street, NW, Washington, DC 20503.

Dated: May 20, 1998.

Richard T. Westlund,

Acting Director, Regulatory Information Division.

[FR Doc. 98–13990 Filed 5–26–98; 8:45 am]

BILLING CODE 6560–50–P

ENVIRONMENTAL PROTECTION AGENCY

[FRL–6102–7]

Science Advisory Board, Environmental Health Committee; Notification of Public Meeting, June 9–10, 1998

AGENCY: Environmental Protection Agency (EPA).

ACTION: Notice.

SUMMARY: Pursuant to the Federal Advisory Committee Act, Pub. L. 92–463, notification is hereby given that the Environmental Health Committee (EHC) (henceforth, the ''Committee'') of the Science Advisory Board (SAB) will meet on Tuesday June 9 and Wednesday June 10, 1998, beginning no earlier than 8:30 am and ending no later than 5:00 pm on each day. The meeting will be held in the Main Auditorium, U.S. EPA, Environmental Research Center, Route 54 and Alexander Drive, Research Triangle Park, North Carolina 27711. The meeting is open to the public, however, due to limited space, seating will be on a first-come basis.

The purpose of the meeting is for the Committee to review: (a) Case studies on the application of the Inhalation Reference Concentrations (RfC) Methods; and (b) the Acute Reference Exposure Methodology (ARE). Both the RfC Methods and the ARE Methods were developed by the U.S. EPA Office of Research and Development (ORD), National Center for Environmental Assessment (NCEA).

Charge for the RfC Methods Case Studies Review

The Methodology document provides the general conceptual framework for evaluation of inhalation toxicity, as well as the specifics and operational procedures for this evaluation. The procedures of the methodology will continue to develop as the state-of-science changes. The general charge to the Committee is to conduct a review on the utility of the conceptual framework through examination of case studies of chemicals across various types of agents (particle versus gas category) and data base (human versus laboratory animal; incomplete or comprehensively complete). The Committee is also charged to comment on specific aspects

of this framework, notably, consistency in the conceptual approach regarding: hazard identification; designation of effect levels; choice of critical effect; choice of principal study; duration and dosimetry adjustment; response modeling; application of UF; and characterization of uncertainty (confidence statements).

The Committee has also been asked to comment on the level of documentation used to support RfC estimates. In addition, the Committee has been asked to respond to the following specific questions: (a) Overall, are the concepts and applications of the RfC methodology clearly articulated in the documentation provided for the case studies? Do the decisions and choices in these files attain the Agency's goal of being ''transparent, clear, and reasonable''? If not, what are specific examples within these files that could be instituted to better attain this goal?; (b) In derivation of the RfC in the specific case studies, (1) are the study summaries presented in sufficient detail for reader evaluation?, (2) are the designations of the critical effect and effects levels (NOAEL/LOAEL/BMC) based on rationales that are clear and reasonable?, (3) of the studies presented in either the IRIS Summary or Toxicological Review of each chemical, has the Principal study/ies been selected in a consistent and rational manner? Does this choice reflect consideration on the current knowledge of potential human response?, (4) have the underlying assumptions of the duration and dosimetry adjustments been presented clearly?, (5) are the rationales presented for use of uncertainty factors clear, reasonable and consistent?, (6) do the confidence statements reflect the strengths and limitations (e.g., relevancy to humans, comprehensiveness of the data base) of the RfC assessment in a manner consistent with the Agency's goals?; and (c) In the IRIS Summaries for the specific cases, numerous studies are included under the heading ''Supporting/Additional Studies'' that are meant to provide further support for designation of the critical effect (e.g., mechanistic data, human data) or for the effect level chosen in the Principal study, or to establish the completeness of the data base. Is the depth of presentation in this section sufficiently comprehensive to provide information supportive of the decisions made in the assessment (such as uncertainty factors and confidence levels)?

Charge for the Acute Reference Exposure Methods Review

The Committee has been asked to respond to the following Charge questions for the Acute Reference Exposure Methodology review: (a) The ARE methodology recommends three approaches for deriving ARE values and describes the types and amount of data that should be used to support each approach. Are these approaches appropriate for deriving acute exposure values? Are the recommendations for types and amount of data appropriate?; (b) The ARE methodology recommends using dosimetric adjustments to derive human equivalent concentrations from animal exposures. The ARE methodology departs from the RfC methodology by recommending default dosimetric adjustment factors of one for all categories of gases. For particulates, the same adjustments used for developing RfCs are recommended. Does the documentation provide sufficient rationale for these recommendations? If not, please comment on the elements that are lacking. Are the recommended dosimetric adjustments applicable to acute exposure scenarios? If not, please recommend dosimetric adjustments that are more applicable to acute exposures; (c) The categorical regression option of the ARE methodology involves assigning ordinal severity categories to effect data from toxicity studies that use a variety of species, exposure concentrations and exposure durations. Regression analysis is then used to relate the severity of response to exposure concentration and duration for the entire array of data. For determining the severity category of acute health effects, the ARE methodology document recommends using toxicological judgment rather than a well-defined scheme as schemes are unlikely to be applicable to a variety of toxic endpoints. Is the expert system for categorizing severity sufficient? If not, how can it be improved?; (d) The ARE methodology recommends using severe effect data, including lethality, for the categorical regression approach, but advises against using lethality and other nonsensitive endpoints when using No-Observed-Adverse-Effect Level (NOAEL) and benchmark concentration approaches. The categorical regression model uses severe effect data to determine the slopes of the probability curves for each severity, the intercepts for the curves and the distance between the various severity curves. Is the guidance offered for including lethal and severe effect data for ARE derivation sufficient? Can the Committee suggest ways in which severe effect data could be better utilized?; (e) CatReg software allows individual data and data reported as group information to be combined in a single analysis. The *CatReg Software User Manual* offers three alternatives for placing group and individual data on ''equal footing'': the use of a scaling factor, g; converting individual data to group data; and estimating individual responses from group information. No alternative is described as preferred. Does the Committee have an opinion as to which alternative may be preferable?; (f) In categorical regression, the rules of probability constrain the probability curves for the various severities to be parallel. Although parallelism is a mathematical constraint, it implies the biological interpretation that similar mechanisms of action and kinetics are active in all severity categories. Does the Committee view this as a limitation to the categorical regression approach? If so, how should the use of categorical regression be constrained?; and (g) Of the approaches recommended for ARE derivation, categorical regression is the only approach for which duration extrapolation is not required. The NOAEL and benchmark dose/concentration methods (BMC) approaches can only be applied to exposure durations for which data are available. AREs for other exposure durations must be derived by duration extrapolations. AREs for other exposure durations must be derived by duration extrapolations. For extrapolation from short duration values to longer durations, a concentration x time adjustment is recommended. For extrapolations from long durations to shorter durations, use of the same concentration identified at the longer duration is recommended. These are conservative duration adjustments. Are these duration adjustments appropriate for the approaches to which they are applied? Can the Committee suggest other adjustments that may be more appropriate?

Background for RfC Methods Case Studies Review

The Clean Air Act Amendments (CAAA) of 1990 require sources to demonstrate negligible risk and lack of residual risk (after implementation of control technology) based on health risk estimates. Inhalation Reference Concentrations (RfCs) are developed as dose-response estimates for noncancer effects. The RfC is an estimate (with uncertainty spanning perhaps an order of magnitude) of a daily inhalation exposure to the human population (including sensitive subgroups) that is

likely to be without an appreciable risk of deleterious noncancer effects during a lifetime. It is anticipated that RfCs will be used for CAAA regulatory activities as a part of the determination of negligible and residual risk for noncancer health effects of air toxics. Additionally, Regional, State and local air pollution control offices utilize RfC values in risk management programs.

The inhalation RfC methodology was developed according to the oral reference dose (RfD) paradigm with an added emphasis on portal-of-entry considerations of comparative toxicity and inhalation dosimetry for particles and gases. Extrapolation modeling was added in which factors are derived for adjustment of exposure concentrations that account for dosimetric differences between experimental animal species and humans. The methodology is considered to be a ''living'' document. Previous versions have undergone external peer review, including an expert peer review in October 1987 and a Science Advisory Board review in 1990 (EPA-SAB-EC–91–008). The current version of the methodology *(Methods for Derivation of Inhalation Reference Concentrations and Application of Inhalation Dosimetry, EPA/600/8–90/066F, October 1994)* represents the Agency's response to comments made at the 1990 SAB review including revisions to allow flexibility in the methods employed for dosimetry adjustments that reflect the state-of-the-science such as substitution of ''optimal'' approaches (e.g., PB-PK) when validated models are available. The current version of the Methodology and a category scheme for gases was reviewed by two additional external workgroups in August and September 1993. Revisions are already underway in the dosimetry adjustments to allow for contemporary mechanistic data to inform the choice of alternative dose metrics across noncancer and cancer toxicities where appropriate.

At its review of the inhalation methodology, the SAB requested the opportunity to review case studies using the methods to demonstrate the application of the dosimetric adjustments and to illustrate the methodology applied to chemicals representative of the typical range of data available including those with human occupational or clinical information and those with databases considered to be insufficient for quantitative dose-response estimation (''not-verifiable''). The review requested by the SAB is not intended to be a review of the RfC methods themselves but rather one of the conceptual framework of the approach as applied to representative data. The accompanying documents and related references (Jarabek, 1994; 1995a,b) provide definitions of uncertainty factors and details on the RfC derivation procedures. Case studies will be presented in one of four groups: (1) Particle case studies, (2) category 1 gas case studies, (3) category 3 gas case studies, and (4) not-verifiable case studies.

Another concern that had been voiced in a 1990 EHC report to the Agency (EPA–SAB–EHC–90–005) regarding the RfD Methodology was the reliance on the NOAEL/LOAEL approach for designation of the effect levels used in the derivation. Since that time, the Agency has advocated the use of the benchmark dose/concentration (BMD/C) approach as preferred or at least complimentary to the NOAEL/LOAEL approach *(The Use of the Benchmark Dose Approach in Health Risk Assessment, EPA/630/R–94/007, February 1995)* when the data allow. Some of the case studies to be reviewed (MDI, phosphoric acid, antimony trioxide, carbon disulfide) present BMC analyses.

Background documentation describing the derivation of the RfC for each of the chemical files has been provided. In some cases this is embodied by the IRIS Summary (i.e., on-line IRIS file) alone. The newer files (1997 and 1998) are accompanied by a Toxicological Review from which the actual on-line IRIS assessments are derived in addition to the summary sheet. The complete IRIS file for the compounds reviewed (and any other compound on IRIS) is available at http://www.epa.gov/iris. The differences in level of documentation reflect changes made during a pilot program of the Integrated Risk Information System (IRIS) process which will be described at the meeting and is reviewed in Mills and Foureman (1998).

Background for Acute Reference Exposure Methods Review

Risk assessment for acute inhalation exposures has been hampered by the lack of acute toxicity values on which to base an evaluation of exposure. In an effort to provide toxicity values for acute noncancer risk assessment for inhalation exposures, the U.S. EPA National Center for Environmental Assessment has developed a methodology for Agency use to perform dose-response assessments for noncancer effects due to acute inhalation exposures. The methodology describes how to derive chemical-specific acute exposure benchmarks called acute reference exposures (AREs). These estimates, applicable to single continuous exposures for up to 24 hours, will have wide applicability in assessing potential health risks due to short-term exposures to airborne chemicals in the environment. As they are developed and reviewed, AREs will be available to the public in chemical-specific files found in U.S. EPA's Integrated Risk Information System (IRIS) database.

The methodology document, *Methods for Exposure-Response Analysis for Acute Inhalation Exposure to Chemicals, Development of Acute Reference Exposure,* has undergone both internal and external peer review and was revised accordingly. The supplementary documents, *CatReg Software Documentation* and *CatReg Software User Manual,* were developed subsequent to the external peer review and have undergone internal peer review and revision.

For Further Information

Copies of the review document and any background materials for the review (with the exception of the SAB reports) are not available from the SAB. Copies of SAB prepared reports mentioned in this FR Notice may be obtained from the SAB's Committee Evaluation and Support Staff at (202) 260–4126, or via fax at (202) 260–1889. Please provide the SAB report number when making a request.

Requests for individual copies of the background material for the RfC Methods Case Studies review should be directed to Ms. Annie Jarabek by telephone (919) 541–4847, by fax (919) 541–1818 or via Email at: jarabek.annie@epa.gov. Technical questions about the RfC Methods Case Studies review should also be directed to Ms. Annie Jarabek, National Center for Environmental Assessment-RTP, Mail Drop 52, U.S. EPA, Research Triangle Park, NC 27711.

Requests for individual copies of the background material for the Acute Reference Exposure review should be directed to Dr. Judy Strickland by telephone (919) 541–4930, by fax (919) 541–0245 or via Email at: strickland.judy@epa.gov. Technical questions about the Acute Reference Exposure Methods should also be directed to Dr. Judy Strickland, National Center for Environmental Assessment-RTP, Mail Drop 52, U.S. EPA, Research Triangle Park, NC 27711.

Members of the public desiring additional information about the meeting, including an agenda, should contact Ms. Mary Winston, Committee Operations Staff, Science Advisory Board (1400), U.S. EPA, 401 M Street,

SW, Washington DC 20460, by telephone (202) 260–4126; fax (202) 260–7118; or via Email at: winston.mary@epa.gov

Anyone wishing to make an oral presentation at the meeting must contact Ms. Roslyn Edson, Acting Designated Federal Officer for the EHC, in writing, no later than 5:00 p.m. Eastern Time on June 4, 1998, by fax (202) 260–7118, or via Email at: edson.roslyn@epa.gov The request should identify the name of the individual who will make the presentation and an outline of the issues to be addressed. At least 35 copies of any written comments to the Committee are to be given to Ms. Edson no later than the time of the presentation for distribution to the Committee and the interested public. For questions concerning the review, Ms. Edson can be contacted at (202) 260–3823.

Providing Oral or Written Comments at SAB Meetings

The Science Advisory Board expects that public statements presented at its meetings will not repeat previously submitted oral or written statements. In general, each individual or group making an oral presentation will be limited to a total time of ten minutes. This time may be reduced at the discretion of the SAB, depending on meeting circumstances. Oral presentations at teleconferences will normally be limited to three minutes per speaker or organization. Written comments (at least 35 copies) received in the SAB Staff Office sufficiently prior to a meeting date, may be mailed to the relevant SAB committee or subcommittee prior to its meeting; comments received too close to the meeting date will normally be provided to the committee at its meeting. Written comments, which may be of any length, may be provided to the relevant committee or subcommittee up until the time of the meeting.

Individuals requiring special accommodation, including wheelchair access, should contact Ms. Edson at least five business days prior to the meeting so that appropriate arrangements can be made.

Dated: May 15, 1998.

Donald G. Barnes,

Staff Director, Science Advisory Board.

[FR Doc. 98–13993 Filed 5–26–98; 8:45 am]

BILLING CODE 6560–50–P

ENVIRONMENTAL PROTECTION AGENCY

[FRL–6102–5]

Changes to the May 8, 1998 Federal Register Notice Regarding Salt River Municipal Solid Waste Landfill Tentative Approval; Address Correction to Public Hearing Location; Date Changes to Public Hearing and Public Comment Period

AGENCY: Environmental Protection Agency (EPA).

ACTION: Notice; correction.

SUMMARY: EPA's tentative approval of an alternative liner system design and use of an alternative daily cover material for the Salt River Municipal Solid Waste Landfill was published in the May 8, 1998, **Federal Register** (63 FR 25476–25479). The following information is an update to the May 8, 1998, **Federal Register** document.

Address Correction: the address for the public hearing was incorrect and printed as 1005 E. Osborne Road. The correct address is 10005 Osborne Road.

Public Hearing Date: has been rescheduled from June 10, 1998, to July 29, 1998.

Public Comment Period: has been extended from June 10, 1998, to August 5, 1998.

Please note that public hearing is scheduled for July 29, 1998, from 5–7 pm at Salt River Pima-Maricopa Indian Reservation, Community Development Conference Room, 10005 E. Osborne Road, Scottsdale, Arizona 85256. For further information, contact Steve Parker at (602) 850–8024. At the hearing, EPA may limit oral testimony to five minutes per speaker, depending on the number of commentors. The hearing may adjourn earlier than 7:00 pm if all of the speakers deliver their comments before that hour. Representatives of the Salt River Pima-Maricopa Indian Community and the Salt River MSWLF will be present at the public hearing.

Copies of the Salt River Pima-Maricopa Indian Community's applications for site-specific flexibility are available for inspection and copying at: Salt River Pima-Maricopa Indian Reservation Administration Building, 10005 E. Osborne Road, Scottsdale, Arizona 85256. Contact: Lonita Jim, Tribal Secretary (602) 850–8000, or the US EPA Region 9 Library, 75 Hawthorne Street 13th Floor, San Francisco, California, 94105, telephone (415) 744–1510, from 9 am to 5 pm Monday through Friday.

All comments on the Salt River Pima-Maricopa Indian Community's applications for approval of site-specific flexibility must be received by August 5, 1998. Written comments should be sent to Ms. Susanna Trujillo, Mail Code WST–7, US EPA Region 9, 75 Hawthorne Street, San Francisco, California 94105.

Dated: May 15, 1998.

Lawrence J. Bowerman,

Acting Director, Waste Management Division.

[FR Doc. 98–13991 Filed 5–26–98; 8:45 am]

BILLING CODE 6560–50–P

FEDERAL COMMUNICATIONS COMMISSION

Notice of Public Information Collection(s) Being Reviewed by the Federal Communications Commission

May 19, 1998.

SUMMARY: The Federal Communications Commission, as part of its continuing effort to reduce paperwork burden invites the general public and other Federal agencies to take this opportunity to comment on the following information collection(s), as required by the Paperwork Reduction Act of 1995, Public Law 104–13. An agency may not conduct or sponsor a collection of information unless it displays a currently valid control number. No person shall be subject to any penalty for failing to comply with a collection of information subject to the Paperwork Reduction Act (PRA) that does not display a valid control number. Comments are requested concerning (a) whether the proposed collection of information is necessary for the proper performance of the functions of the Commission, including whether the information shall have practical utility; (b) the accuracy of the Commission's burden estimate; (c) ways to enhance the quality, utility, and clarity of the information collected; and (d) ways to minimize the burden of the collection of information on the respondents, including the use of automated collection techniques or other forms of information technology.

DATES: Written comments should be submitted on or before July 27, 1998. If you anticipate that you will be submitting comments, but find it difficult to do so within the period of time allowed by this notice, you should advise the contact listed below as soon as possible.

ADDRESSES: Direct all comments to Judy Boley, Federal Communications Commission, Room 234, 1919 M St., N.W., Washington, DC 20554 or via internet to jboley@fcc.gov.

FOR FURTHER INFORMATION CONTACT: For additional information or copies of the

information collection(s), contact Judy Boley at 202–418–0214 or via internet at jboley@fcc.gov.

SUPPLEMENTARY INFORMATION:

OMB Control No.: 3060–0653.

Title: Consumer Information—Posting by Aggregators, Section 64.703(b).

Form No.: N/A.

Type of Review: Extension of a currently approved collection.

Respondents: Business or other for-profit entities.

Number of Respondents: 56,200 respondents.

Estimated Time Per Response: 3.57 hours per response (avg.).

Total Annual Burden: 202,566 hours.

Estimated Annual Reporting and Recordkeeping Cost Burden: $0.

Frequency of Response: On occasion reporting requirement; Third party disclosure.

Needs and Uses: As required by 47 U.S.C. Section 226(c)(1)(A), Section 64.703(b) of the Commission's rules provides that aggregators (providers of telephones to the public or transient users) must post in writing, on or near such phones, information about presubscribed operator services, rates, carrier access, and the FCC address to which consumers may direct complaints.

OMB Control No.: 3060–0149.

Title: Application and Supplemental Information Requirements—Part 63, Section 214, Sections 63.01–63.601.

Form No.: N/A.

Type of Review: Extension of a currently approved collection.

Respondents: Businesses or other for profit entities.

Number of Respondents: 255 respondents.

Estimated Time Per Response: 10 hours per response (avg.).

Total Annual Burden: 2550 hours.

Estimated Annual Reporting and Recordkeeping Cost Burden: $0.

Frequency of Response: On occasion reporting requirement.

Needs and Uses: Section 214 of the Communications Act of 1934, as amended, 47 U.S.C. Section 214, requires that a carrier must first obtain FCC authorization either to (1) construct, operate, or engage in transmission over a line of communication, or (2) discontinue, reduce, or impair service over a line of communication. 47 CFR Part 63 implements Section 214. In a NPRM issued in CC Docket No. 97–11, the Commission proposed to modify 47 CFR Part 63 to eliminate information submission requirements entirely for some categories of communications carriers and to reduce the submissions requirements for other categories. The Commission proposed entirely eliminating the requirement for carriers to file applications for line ''extensions'' because Congress has exempted line ''extensions'' for the requirements of 47 U.S.C. 214, under Section 402(b)(2)(A) of the Telecommunications Act of 1996. The Commission also proposed eliminating the requirement for reports submitted by carriers identified by the Commission as domestic non-dominant carriers, small carriers, and carriers proposing small projects. For carriers identified by the Commission as domestic dominant rate-of-return carriers, the Commission proposed reducing (but not entirely eliminating) the information submission requirements in applications for ''new'' lines, because the information is collected elsewhere, is unnecessary, is confusing in light of the provisions of section 402(b)(2)(A), or is no longer of decisional significance to the Commission. The information received in applications from dominant carriers (not proposed to be reduced) has been used by the Commission to determine if the facilities are needed. The information contained in reports from nondominant carriers (not proposed to be eliminated) has been used to monitor the growth of the networks and the availability of common carrier services in this segment of the telecommunications market, to relieve these carriers and the Commission of a before-the-fact review of each subsequent facility addition. These collections of information were deemed necessary to enable the Commission to comply with its mandate. Because Congress has changed the Commission's mandate in the Telecommunications Act of 1996, the information proposed to be reduced or eliminated may no longer be warranted.

OMB Control No.: 3060–0815.

Title: North American Numbering Plan Funding Worksheet.

Form No.: FCC Form 496.

Type of Review: Extension of a currently approved collection.

Respondents: Business or other for profit.

Number of Respondents: 3700 respondents.

Estimated Time Per Response: .50 hours per response (avg.).

Total Annual Burden: 1850 hours.

Estimated Reporting and Recordkeeping Cost Burden: $0.

Frequency of Response: On occasion reporting requirement.

Needs and Uses: Pursuant to Congress' directive in the Telecommunications Act of 1996 that the Commission establish an independent entity to administer telecommunications numbering, the Commission determined on July 13, 1995, that the costs associated with administering numbering duties should be based on each telecommunications carrier's gross revenues less payments made to other carriers. We authorized the North American Numbering Plan Administrator's (NANPA) billing and collections agent to send FCC Form 496 requesting that telecommunications carriers provide information regarding their yearly gross revenues less payments made to other telecommunications carriers. The worksheet, FCC form 496, seeks financial data, and payment from telecommunications carriers to fund NANPA. All common carriers providing telecommunications service between U.S. and foreign points must file this worksheet. The Commission and the NANPA will use the information collected in the worksheet to determine the total revenue received from telecommunications carriers in order to arrive at an amount that each carrier must pay to fund the NANPA.

OMB Control No.: 3060–0613.

Title: Expanded Interconnection with Local Telephone Company Facilities, CC Docket No. 91–141, Transport Phase II (Third R&O).

Form No.: N/A.

Type of Review: Extension of a currently approved collection.

Respondents: Business or other for profit.

Number of Respondents: 64 respondents.

Estimated Time Per Response: 13 hours per response (avg.).

Total Annual Burden: 832 hours.

Estimated Annual Reporting and Recordkeeping: $0.

Frequency of Response: On occasion reporting requirement.

Needs and Uses: Tier 1 local exchange carriers (except NECA members) are required to make tariff filings to provide certain signalling information to interested parties so that those parties can provide tandem switching services. Tandem switching providers are required to provide certain billing information to those Tier 1 local exchange carriers.

Federal Communications Commission.

Magalie Roman Salas,

Secretary.

[FR Doc. 98–13948 Filed 5–26–98; 8:45 am]

BILLING CODE 6712–01–P

FEDERAL MARITIME COMMISSION

Ocean Freight Forwarder License; Applicants

Notice is hereby given that the following applicants have filed with the Federal Maritime Commission applications for licenses as ocean freight forwarders pursuant to section 19 of the Shipping Act of 1984 (46 U.S.C. app. 1718 and 46 CFR 510).

Persons knowing of any reason why any of the following applicants should not receive a license are requested to contact the Office of Freight Forwarders, Federal Maritime Commission, Washington, D.C. 20573.

Florida International Forwarders, Inc., 12900 SW 111 Ave., Miami, FL 33176, Officer: Joe A. Caballero, President

Baytop Container Co., 2214 Torrance Blvd., #102, Torrance, CA 90501, Kevin Ahn, Sole Proprietor

Auto Shipping International, 3859 Park Avenue, Edison, NJ 08820, Ronald A. Pfeiffer, Sole Proprietor

ACD Cargo, Inc., 1521 N.W. 82 Avenue, Miami, FL 33134, Officer: Maria Flores, President

J C Shipping Inc., 802 Spring Lake Court, P.O. Box 128, Morrow, GA 30260, Officer: Joseph Chong, Director

Gene International Inc., 2125 Center Avenue, Suite 300A, Ft. Lee, NJ 07024, Officers: Ae S. Park, President, Yoon S. Park, Secretary.

Dated: May 20, 1998.

Joseph C. Polking,

Secretary.

[FR Doc. 98–13927 Filed 5–26–98; 8:45 am]

BILLING CODE 6730–01–M

FEDERAL RESERVE SYSTEM

Formations of, Acquisitions by, and Mergers of Bank Holding Companies

The companies listed in this notice have applied to the Board for approval, pursuant to the Bank Holding Company Act of 1956 (12 U.S.C. 1841 *et seq.*) (BHC Act), Regulation Y (12 CFR Part 225), and all other applicable statutes and regulations to become a bank holding company and/or to acquire the assets or the ownership of, control of, or the power to vote shares of a bank or bank holding company and all of the banks and nonbanking companies owned by the bank holding company, including the companies listed below.

The applications listed below, as well as other related filings required by the Board, are available for immediate inspection at the Federal Reserve Bank indicated. The application also will be available for inspection at the offices of the Board of Governors. Interested persons may express their views in writing on the standards enumerated in the BHC Act (12 U.S.C. 1842(c)). If the proposal also involves the acquisition of a nonbanking company, the review also includes whether the acquisition of the nonbanking company complies with the standards in section 4 of the BHC Act. Unless otherwise noted, nonbanking activities will be conducted throughout the United States.

Unless otherwise noted, comments regarding each of these applications must be received at the Reserve Bank indicated or the offices of the Board of Governors not later than June 19, 1998.

A. Federal Reserve Bank of Cleveland (Paul Kaboth, Banking Supervisor) 1455 East Sixth Street, Cleveland, Ohio 44101-2566:

1. Citizens Bancshares, Inc., Salineville, Ohio; to acquire 10 percent of the voting shares of NSD Bancorp, Inc., Pittsburgh, Pennsylvania, and thereby indirectly acquire Northside Deposit Bank, Pittsburgh, Pennsylvania.

2. Premier Financial Bancorp, Inc., Georgetown, Kentucky; to acquire 100 percent of the voting shares of The Bank of Philippi, Inc., Philippi, West Virginia (in organization).

B. Federal Reserve Bank of Minneapolis (Karen L. Grandstrand, Vice President) 90 Hennepin Avenue, P.O. Box 291, Minneapolis, Minnesota 55480-0291:

1. Frandsen Financial Corporation, Forest Lake, Minnesota; to merge with Taylor Bancshares, Inc., North Mankato, Minnesota, and thereby indirectly acquire Fidelity State Bank of Fairfax, Fairfax, Minnesota; Fidelity State Bank of Hector, Hector, Minnesota; Valley Bank Minnesota, Jordan, Minnesota; Farmers Bank, Minnesota Lake, Minnesota; State Bank & Trust Company of New Ulm, New Ulm, Minnesota; and Valley Bank, North Mankato, Minnesota.

C. Federal Reserve Bank of San Francisco (Maria Villanueva, Manager of Analytical Support, Consumer Regulation Group) 101 Market Street, San Francisco, California 94105-1579:

1. United Security Bancorporation, Spokane, Washington; to acquire 100 percent of the voting shares of Grant National Bank, Ephrata, Washington.

Board of Governors of the Federal Reserve System, May 20, 1998.

Jennifer J. Johnson,

Deputy Secretary of the Board.

[FR Doc. 98–13914 Filed 5–26–98; 8:45 am]

BILLING CODE 6210–01–F

FEDERAL RESERVE SYSTEM

Sunshine Act Meeting

AGENCY HOLDING THE MEETING: Board of Governors of the Federal Reserve System.

TIME AND DATE: 11:00 a.m., Monday, June 1, 1998.

PLACE: Marriner S. Eccles Federal Reserve Board Building, 20th and C Streets, NW., Washington, DC 20551.

STATUS: Closed.

MATTERS TO BE CONSIDERED:

1. Personnel actions (appointments, promotions, assignments, reassignments, and salary actions) involving individual Federal Reserve System employees.

2. Any items carried forward from a previously announced meeting.

CONTACT PERSON FOR MORE INFORMATION: Joseph R. Coyne, Assistant to the Board; 202–452–3204.

SUPPLEMENTARY INFORMATION: You may call 202–452–3206 beginning at approximately 5 p.m. two business days before the meeting for a recorded announcement of bank and bank holding company applications scheduled for the meeting; or you may contact the Board's Web site at http://www.bog.frb.fed.us for an electronic announcement that not only lists applications, but also indicates procedural and other information about the meeting.

Dated: May 22, 1998.

Jennifer J. Johnson,

Deputy Secretary of the Board.

[FR Doc. 98–14089 Filed 5–22–98; 10:25 am]

BILLING CODE 6210–01–P

GENERAL ACCOUNTING OFFICE

Advisory Council on Government Auditing Standards; Sunshine Act Meeting

The Advisory Council on Government Auditing Standards will meet on Monday, June 8, 1998, from 9:00 a.m. to 4:30 p.m., in room 7C13 of the General Accounting Office building, 441 G St., NW., Washington, DC.

The Advisory Council on Government Auditing Standards will hold a meeting to discuss issues that may impact Government Auditing Standards. Any interested person may attend the meeting as an observer. Council discussions and reviews are open to the public.

FOR FURTHER INFORMATION CONTACT: Marcia Buchanan, Assistant Director, Government Auditing Standards, AIMD, (202) 512–9321.

Dated: May 22, 1998.

Marcia B. Buchanan,

Assistant Director.

[FR Doc. 98–14133 Filed 5–22–98; 12:49 pm]

BILLING CODE 1610–02–M

DEPARTMENT OF HEALTH AND HUMAN SERVICES

Administration on Aging

Public Information Collection Requirement Submitted to the Office of Management and Budget for Clearance

AGENCY: Administration on Aging.

SUMMARY: The Administration on Aging (AoA), Department of Health and Human Services, in compliance with the Paperwork Reduction Act (Pubic Law 95–511), is submitting to the Office of Management and Budget for clearance and approval an information collection instrument, namely Performance (Progress) Reports for Title IV Grantees.

Type of Request: Extension of currently approved collection.

Use: Consistent with 45 CFR Part 74, Subpart J, the AoA requires grantees funded under Title IV of the Older Americans Act to report on the performance of their projects. The report is used by the AoA to review and monitor the grantee's progress in achieving project objectives, provide advice and assistance, and to take corrective action as necessary.

Frequency: Semiannually.

Respondent: Title IV grantees.

Estimated number of respondents: 60

Estimated burden hours: 20 hours for each semiannual report.

Additional Information: Each progress report, typically 5 pages in length, is expected to cover the following subjects: recent major activities and accomplishments; problems encountered; significant findings and events; dissemination activities; and; activities planned for the next 6 months.

OMB Comment: OMB is required to make a decision concerning this collection of information between 30 and 60 days after publication of this document in the **Federal Register**. Therefore, a comment is best assured of having its full effect if OMB receives it as soon as possible after its publication. Written comments and recommendations for the proposed information collection should be sent to the following address within 30 days of the publication of this notice: Office of Information and Regulatory Affairs, Attention: Allison Eydt, OMB Desk Officer, Office of Management and Budget, Washington, DC 20503.

Diane Justice,

Deputy Assistant Secretary for Aging.

[FR Doc. 98–14005 Filed 5–26–98; 8:45 am]

BILLING CODE 4150–40–M

DEPARTMENT OF HEALTH AND HUMAN SERVICES

Centers for Disease Control and Prevention

[INFO–98–19]

Proposed Data Collections Submitted for Public Comment and Recommendations

In compliance with the requirement of Section 3506(c)(2)(A) of the Paperwork Reduction Act of 1995 for opportunity for public comment on proposed data collection projects, the Centers for Disease Control and Prevention (CDC) will publish periodic summaries of proposed projects. To request more information on the proposed projects or to obtain a copy of the data collection plans and instruments, call the CDC Reports Clearance Officer on (404) 639–7090.

Comments are invited on: (a) Whether the proposed collection of information is necessary for the proper performance of the functions of the agency, including whether the information shall have practical utility; (b) the accuracy of the agency's estimate of the burden of the proposed collection of information; (c) ways to enhance the quality, utility, and clarity of the information to be collected; and (d) ways to minimize the burden of the collection of information on respondents, including through the use of automated collection techniques for other forms of information technology. Send comments to Seleda Perryman, CDC Assistant Reports Clearance Officer, 1600 Clifton Road, MS–D24, Atlanta, GA 30333. Written comments should be received within 60 days of this notice.

Proposed Projects

1. Surveillance for Bloodstream and Vascular Access Infections in Outpatient Hemodialysis Centers—New—National Center for Infectious Diseases (NCID). The Hospital Infections Program, NCID is proposing a study of bloodstream infections, vascular access infections, hospitalizations, and antimicrobial starts at U.S. outpatient hemodialysis centers. Although bloodstream and vascular access infections are common in hemodialysis patients, there is no existing system to record and track these complications. Participation in the proposed project is voluntary; it is estimated that 100 of the approximately 3,000 U.S. outpatient hemodialysis centers will participate. Participating centers may collect data continuously, or may discontinue participation at any time; we estimate that the average center will participate for six months. Each month, participating centers will record the number of hemodialysis patients they treat and maintain a log of all hospitalizations and intravenous (IV) antimicrobial starts. For each hospitalization or IV antimicrobial start, further information (e.g., type of vascular access, clinical symptoms, presence of a vascular access infection, and blood culture results) will be collected. A computer program will be developed to allow dialysis center personnel to enter and analyze their own data; they will also transmit the data to CDC with all patient identifiers removed. CDC will aggregate this data and generate reports which will be sent to participating dialysis centers. Rates of bloodstream infection, vascular access infection, and antimicrobial use per 1000 patient-days will be calculated. Also, the percentage of antimicrobial starts for which a blood culture is performed will be calculated. Through use of these data, dialysis centers will be able to track rates of key infectious complications of hemodialysis. This will facilitate quality control improvements to reduce the incidence of infections, and clinical practice guidelines to improve use of antimicrobials. The total cost to the respondents is $78,000.

Form	Number of respondents	Number of responses/respondent	Average burden/response (in hours)	Total burden (in hours)
Agreement to Participate	100	1	1	100
Census Form	100	1	1	100
Log	100	[1] 10	1	1,000
Incident Form	100	[1] 200	0.2	4,000

Form	Number of respondents	Number of responses/respondent	Average burden/response (in hours)	Total burden (in hours)
Total				5,200

[1] Estimated mean.

2. Pulmonary Function Testing Course Approval Program, 29 CFR 1910.1043 (0920–0138)—Extension—The National Institute for Occupational Safety and Health (NIOSH) has responsibility under the Cotton Dust Standard, 29 CFR 1910.1043, for approving courses to train technicians to perform pulmonary function testing. Successful completion of a NIOSH approved course is mandatory under the Standard. To carry out its responsibility, NIOSH maintains a Pulmonary Function Testing Course Approval Program. The program consists of an application submitted by potential sponsors who seek NIOSH approval to conduct courses, and if approved, notification to NIOSH of any course or faculty changes during the period of approval. The application form and addended materials including agenda, vitae and course materials are reviewed by NIOSH to determine if the applicant has developed a program which adheres to the criteria required in the Standard. The letter seeking approval for subsequent changes is reviewed to assure that changes in faculty or course content continue to meet course requirements. Applications to be a course sponsor and carry out training are submitted voluntarily by institutions and organizations from throughout the country. If an application is not submitted for review, NIOSH is unable to evaluate a course to determine whether it meets the criteria in the Cotton Dust Standard and whether technicians will be adequately trained as mandated under the Standard. The total cost to respondents for the three year period is $1,851.00.

Respondents	Number of respondents	Number of responses/respondent	Average burden/response (in hours)	Total burden (in hours)
Sponsoring organizations	66	1	.614	40.5
Total				40.5

3. Measurement of Stress and Stressful Life Events in Black Women of Reproductive Age (0920–0356)—Reinstatement—National Center for Chronic Disease Prevention and Health Promotion. A review of studies of psycho-social factors and adverse pregnancy outcome supports the hypothesis that high levels of exposure to stressful life experiences put black women at increased risk for adverse reproductive outcome, particularly Pre-term Delivery (PTD) and Very Low Birth Weight (VLBW). The purpose of this study is to evaluate the reliability and validity of existing instruments that measure stress and stressful life events in black women of reproductive age. Eligible subjects will be black women who live in the Atlanta metropolitan area. Subjects will be recruited from flyers, newspaper announcements, hospitals and clinics in the metropolitan Atlanta area. Subjects will be screened and selected based on age (18–30 or 31–45 years), years of education (12, 13–15, 16 or more), and pregnancy status (pregnant, not pregnant). A maximum of thirty women will be selected for each combination of age, education and pregnancy status. The minimum age for participation will be 18 to avoid the complications due to requirement of parental consent. Women will be excluded if they use illicit drugs, such as heroin, cocaine and marijuana because these substances may alter the metabolism of cortisol. The contact, timing and spacing of the interviews and laboratory collection are based on the methodology developed and used for conducting reliability and validity tests. Approximately one half of the women will be pregnant at the time of data collection.

Women enrolled in the study respond to a series of face-to-face and self-administered demographic and psycho-social questionnaires. Women are also asked to provide a saliva sample so that we can correlate reported levels of stress with biological measures of stress.

Participation in this study is voluntary and participants will receive compensation for their time. A written informed consent will be obtained and oversight will be provided by local institutional review board.

This project should take two years. One hundred fifteen (115) women will participate only in the validity study and thirty-nine (39) women will participate in the validity and reliability study. The validity study requires one interview and one salivary sample. The reliability study requires a second interview and a second salivary specimen, approximately two weeks after the first interview.

During the first three months of the study, the Project Director will set up the office, hire staff and student assistants and provide interviewer and data entry training. The Project Director will also make contacts and explore potential sites for recruiting women for the study. During the next nine months, all of the interviews (approximately 115 validity subjects and 39 reliability subjects remaining) will be conducted and data entry of the quantitative instruments (i.e Demographic Lifestyle Questionnaire, Cohen Perceived Stress Scale, Life Experience Survey (LES), ARIC/BAECKE Questionnaire of Habitual Physical Activity, Center for Epidemiologic Studies Depression Scale (CES–D), Profile of Mood States, Multiple Affect Adjustive Checklist, Speilberger Trait Anxiety Inventory—Self Evaluation Questionnaire) will be completed. Scoring for the qualitative instruments (i.e. Structured Event Probe and Narrative Rating Method (SEPRATE) and Life Events and Difficulties Schedule (LEDS) will be initiated during year 1, but the bulk of the qualitative scoring will be completed during Year 2. The data entry of the qualitative date will be completed during Year 2. Preliminary analyzes will be conducted during Year 2, with the technical assistance of CDC. The total estimated cost to respondents is $6,755.

Respondents	Number of respondents	Number of responses/respondent	Average burden/response (in hours)	Total burden (in hours)
Reliability Study Group	39	2	3	234
Validity Study Group	115	1	3	345
Total				579

4. The National Death Index (NDI) (0920–0215)—Extension—A service of the National Center for Health Statistics (NCHS), that assists health and medical researchers to determine the vital status of their study subjects. The NDI is a national data base containing *identifying* death record information submitted annually to NCHS by all the state vital statistics offices, beginning with deaths in 1979. Searches against the NDI file provide the states and dates of death and the death certificate numbers of deceased study subjects. With the recent implementation of the NDI Plus service, researchers now have the option of also receiving cause of death information for deceased subjects, thus reducing the need to request copies of death certificates from the states. The NDI Plus option currently provides the ICD–9 codes for the underlying and multiple causes of death for the years 1979–1996. The five administrative forms are completed by health researchers in government, universities, and private industry in order to apply for NDI services and to submit records of study subjects for computer matching against the NDI file. The total cost to respondents is estimated at $5,685.

Respondents	Number of respondents	Number of responses/respondents	Average burden/response (in hours)	Total burden (in hours)
Government researchers	48	1	1.89	90.8
University researchers	60	1	1.89	113.5
Private industry researchers	12	1	1.89	22.7
Total				227.0

Charles W. Gollmar,

Acting Associate Director for Policy, Planning and Evaluation, Centers for Disease Control and Prevention (CDC).

[FR Doc. 98–13952 Filed 5–26–98; 8:45 am]

BILLING CODE 4163–18–P

DEPARTMENT OF HEALTH AND HUMAN SERVICES

Food and Drug Administration

Food Safety Research: Availability of Cooperative Agreements; Request for Applications

AGENCY: Food and Drug Administration, HHS.

ACTION: Notice.

SUMMARY: The Food and Drug Administration (FDA), Center for Food Safety and Applied Nutrition (CFSAN) is announcing the availability of research funds for fiscal year (FY) 1998 to conduct research to support the reduction of the incidence of foodborne illness, specifically to support: The development of sampling methods to enhance the detection, and more specifically the enumeration, of low levels of pathogens in foods; the development of intervention strategies for consumers to improve food safety in the home; and total genome sequence analyses of the pathogen *Escherichia coli* O157:H7, towards a molecular definition of microbial virulence and pathogenicity. Approximately $700,000 will be available in FY 1998. FDA anticipates making three to five awards at $100,000 to $200,000 (direct and indirect costs) per award per year. Support of these agreements may be up to 3 years. The number of agreements funded will depend on the quality of the applications received and the availability of Federal funds to support the project. After the first year, additional years of noncompetitive support are predicated upon performance and the availability of Federal FY funds. FDA is mandated by the President's Food Safety Initiatiative (FSI) to reduce the incidence of foodborne illness to the greatest extent feasible.

DATES: Submit applications by July 13, 1998. If the closing date falls on a weekend, it will be extended to Monday; if the date falls on a holiday, it will be extended to the following workday.

ADDRESSES: Application forms are available from, and completed applications should be submitted to: Robert L. Robins, Division of Contracts and Procurement Management (HFA–520), Food and Drug Administration, 5600 Fishers Lane, Rockville, MD 20857, 301–443–6170. (Applications hand-carried or commercially delivered should be addressed to 5630 Fishers Lane, rm. 2129, Rockville, MD 20852.)

FOR FURTHER INFORMATION CONTACT: Regarding the administrative and financial management aspects of this notice: Robert L. Robins (address above).

Regarding the programmatic aspects of this notice: Robert L. Buchanan, Center for Food Safety and Applied Nutrition, Food and Drug Administration (HFS–500), 200 C St. SW., Washington DC 20204, 202–205–5053.

SUPPLEMENTARY INFORMATION: FDA will support the research studies covered by this notice under section 301 of the Public Health Service Act (the PHS Act) (42 U.S.C. 241). FDA's research program is described in the Catalog of Federal Domestic Assistance, No. 93.103.

The Public Health Service (PHS) strongly encourages all award recipients to provide a smoke-free workplace and to discourage the use of all tobacco products. This is consistent with the PHS mission to protect and advance the physical and mental health of the American people.

PHS urges applicants to submit work plans that address specific objectives of ''Healthy People 2000.'' Potential applicants may obtain a copy of ''Healthy People 2000 (Full Report, stock No. 017–00100474–0) through the Superintendent of Documents, Government Printing Office, Washington, DC 20402–9325, 202–512–1800.

I. Background

FDA is mandated by the President's Food Safety Initiative (FSI) to reduce the incidence of foodborne illness to the greatest extent feasible. Even though the American food supply is among the safest in the world, millions of Americans are stricken by illness each year caused by the food they consume, and some 9,000 a year, primarily the very young and elderly, die as a result. Research in food safety seeks to reduce the incidence of foodborne illness by improving our ability to detect and enumerate pathogens in the food supply and to find new ways to control them. The President's FSI requires that 1998 funds be used to develop rapid cost effective tests for the presence in foods of pathogens and to develop technologies for preventing foodborne illness through the control of pathogens.

FDA has continually sponsored research to improve the detection of pathogens in foods. One area that may now be addressed is the problem of detecting sporadically-occuring low-level pathogens in foods. A caveat to employing existing detection regimens is the need to develop effective sampling strategies. Therefore, one objective of this funding initiative is the development of new approaches to sampling that will allow the use of existing detection regimens for screening larger sample volumes, thereby increasing the probability of detecting the presence of low levels of a pathogen. The ideal sampling method would: (1) Be nondestructive, (2) enhance the detection of multiple target microorganisms at or below current regulatory limits, (3) provide quantitative data of the level of the target pathogen to aid microbial risk assessment, and (4) be capable of being automated.

FDA has continually sponsored research in intervention strategies to mitigate the risk of foodborne illness. The initiative provides an opportunity to expand the range of research questions addressed by FDA in intervention strategies. The development of specific intervention strategies that may be used by consumers or food service providers is a priority need. A substantial number of disease outbreaks are associated with food consumption in the home or food service facilities, and in many of these incidences faulty food handling practices are identified as contributing factors. Some of these practices may be addressed by education. However, even with the strict adherence to recommended food handling practices, there is a risk of pathogenic microorganisms entering the home kitchen. Such hazards have traditionally been controlled by cooking, but this is not an option for many foods (e.g., lettuce, fresh fruit). New methods or technologies are needed that can empower the consumer and food service providers by providing them a means to actively reduce the incidence and prevalence of pathogens on foods that are not amenable to cooking. An effective intervention is one that can consistently reduce the levels of target pathogens (i.e, *Salmonella typhimurium*, *Listeria monocytogenes*, *E. coli* O157:H7, *Cyclospora cayetenensis*, *Cryptosporidium parvum*) by at least 1,000-fold under standardized test conditions. The funding initiative seeks to develop these new methods or technologies.

FDA has continually sponsored research for characterization of microbial virulence factors and the evolution of microbial survival and growth, especially as it impacts pathogenesis. The initiative provides an opportunity to expand the range of research questions addressed by FDA in the virulence and evolution of *E. coli* O157:H7. This pathogen is of special interest because of its virulence and resistance to traditional methods of food preservation. FDA needs to better understand the mechanisms of the pathogen's survival, growth, and evolution, with respect to the factors associated with its pathogenesis. An important tool for acquiring this information is the sequence of the genome of the pathogen. It is expected that sequence information of *E. coli* O157:H7 will provide unique insights into the evolution of the pathogen, particularly in comparison with nonpathogenic *E. coli* sequences. Further insights are anticipated with respect to identifying sequences of deoxyribonucleic acid from other organisms and deducing the mechanism of transfer based upon collateral sequences. Proposed research should initiate a pathway to the eventual development of rapid and sensitive methods for detection, identification, and enumeration of this important pathogen.

II. Research Goals and Objectives

The specific objectives of this program will be: (1) The development of sampling methods or strategies to facilitate existing detection methods towards detecting, and more importantly enumerating, low-level microbial pathogens in food; (2) the development of intervention strategies for use by consumers in the home and by food service providers that will reduce the incidence of food borne illness, particularly that associated with fresh or minimally processed produce; and (3) the expansion of knowledge of the genome of *E. coli* O157:H7, towards a molecular definition of pathogen emergence and resistance to traditional food processing/preservation practices.

Projects that fulfill any one of the following specific objectives will be considered for funding. Applications may address only one project objective; however, applicants may submit more than one application for any of the following project objectives:

A. Project Objective 1

Project objective 1 is intended to develop sampling and statistical methods that facilitate existing pathogen detection regimens to allow the detection, and more importantly enumeration, of low-levels of pathogens in or on foods, particularly fresh or minimally processed produce. Projects will be considered that seek to develop new ways of sampling large volumes of foods in a nondestructive or contaminating manner and provide quantitative estimates of the level of the pathogen to aid microbial risk assessment. Proposals may include any of a variety of potential isolation, recovery, and/or concentration systems, as long as they are suitable for use in food production, processing, or preparation facilities. An ideal sampling plan should also consider not only occurrence of pathogen(s), but also dispersion or distribution of the pathogen in the food. These pathogen enumeration and distribution data would aid reconstructing the estimated ingested dose that caused illness, lending support to development of dose-response models in microbial risk assessment. A plan for demonstrating the feasibility of the developed methodology in contaminated foods collected under ''field conditions'' should be included.

B. Project Objective 2

Project objective 2 is intended to develop intervention methods or technologies other than cooking that can be used by consumers in the home or by operators of food service facilities. Proposed approaches should provide consumers with new tools and methods that can enhance the microbiological safety of foods, particularly fresh or minimally processed produce, that is prepared in the home or food service facilities by decreasing the level of pathogens in or on the food. The proposed intervention strategy can be at any point between the consumer's, or food service proprietor's, purchase of a

food or food ingredient and its consumption. The proposed intervention strategy must be affordable and easy enough to perform so as to be adopted by consumers. The estimated performance characteristics of the proposed strategy, with respect to added safety, must be carefully detailed in the proposal and validated during the research if the grant is awarded. Validation will include testing with a variety of fresh vegetables and fruit with at least two of the five pathogens mentioned previously.

C. Project Objective 3

Project objective 3 is intended to provide genomic sequence data on *E. coli* O157:H7. Preference will be given to applicants demonstrating documented success of other genomic sequencing projects and well-developed sequencing plans for areas of the genome that have special relevance to food safety. Applicants must demonstrate that they can apply the most recent technology cost-effectively to the production of sequence data and show that they can adequately and efficiently accumulate, store, and disseminate those data for future interpretation and application. A commitment to and a plan for making the sequence data publicly available by deposition into an accessible sequence data base (GenBank and GSDB) within 3 months of data acquisition and annotation, must be included in the project description.

D. Protection of Human Research Subjects

Some activities carried out by a recipient under this announcement may be governed by Department of Health and Human Services (DHHS) regulations for the protection of human research subjects (45 CFR 46). These regulations require recipients to establish procedures for the protection of subjects involved in any research activities. Prior to funding and upon request of the Office for Protection from Research Risks (OPRR), prospective recipients must have on file with OPRR an assurance to comply with 45 CFR 46. This assurance to comply is called an assurance document. It includes the designated Institutional Review Board (IRB) for review and approval of procedures for carrying out any research activities occurring in conjunction with this award. If an applicable assurance document for the applicant is not already on file with OPRR, a formal request for the required assurance will be issued by OPRR at an appropriate point in the review process, prior to award, and examples of required materials will be supplied at that time. No applicant or performance site, without an approved and applicable assurance on file with OPRR, may spend funds on human subject activities or accrue subjects. No performance site, even with an OPRR-approved and applicable assurance, may proceed without approval by OPRR of an applicable assurance for the recipients. Applicants may wish to contacting OPRR by facsimile (301–402–0527) to obtain preliminary guidance on human subjects issues. When contacting OPRR, applicants should provide their institutional affiliation, geographic location, and all available request for application (RFA) citation information.

III. Reporting Requirements

A Program Progress Report and a Financial Status Report (FSR) (SF–269) are required. An original FSR and two copies shall be submitted to FDA's Grants Management Officer within 90 days of the budget expiration date of the cooperative agreement. Failure to file the FSR (SF–269) on time may be grounds for suspension or termination of the agreement. Progress reports will be required quarterly within 30 days following each Federal fiscal quarter (January 31, April 30, July 30, and October 31), except that the fourth report will serve as the annual report and will be due 90 days after the budget expiration date. CFSAN program staff will advise the recipient of the suggested format for the Program Progress Report at the appropriate time. A final FSR (SF–269), Program Progress Report and Invention Statement, must be submitted within 90 days after the expiration of the project period, as noted on the Notice of Grant Award.

Program monitoring of recipients will be conducted on an ongoing basis and written reports will be reviewed and evaluated at least quarterly by the project officer and the project advisory group. Project monitoring may also be in the form of telephone conversations between the project officer/grants management specialist and the principal investigator and/or a site visit with appropriate officials of the recipient organization. The results of these monitoring activities will be duly recorded in the official file and may be available to the recipient upon request.

IV. Mechanism of Support

A. Award Instrument

Support for this program will be in the form of cooperative agreements. These cooperative agreements will be subject to all policies and requirements that govern the research grant programs of the PHS, including the provisions of 42 CFR part 52 and 45 CFR parts 74 and 92. The regulations issued under Executive Order 12372 do not apply to this program.

B. Eligibility

These cooperative agreements are available to any public or private nonprofit entity (including State and local units of government) and any for-profit entity. For-profit entities must exclude fees or profit from their request for support to receive grant awards. Organizations described in section 501(c)(4) of the Internal Revenue Code of 1968 that engage in lobbying are not eligible to receive awards.

C. Length of Support

This agreement is planned for up to 3 years. Funding beyond the first year will be noncompetitive and will depend on: (1) Satisfactory performance during the preceding year, and/or (2) the availability of Federal fiscal year funds.

V. Delineation of Substantive Involvement

Inherent in the cooperative agreement award is substantive involvement by the awarding agency. Accordingly, FDA will have a substantive involvement in the programmatic activities of all the projects funded under this RFA. Substantive involvement includes but is not limited to the following:

1. FDA will appoint project officers who will actively monitor the FDA supported program under each award.
2. FDA will establish a project advisory group which will provide guidance and direction to the project officer with regard to the scientific approaches and methodology that may be used by the investigator.
3. FDA scientists will collaborate with the recipient and have final approval on experimental protocols. This collaboration may include protocol design, data analysis, interpretation of findings, co-authorship of publications and the development and filing of patents.

VI. Review Procedure and Criteria

A. Review Method

All applications submitted in response to this RFA will first be reviewed by grants management and program staff for responsiveness. If applications are found to be nonresponsive, they will be returned to the applicant without further consideration.

Responsive applications will be reviewed and evaluated for scientific and technical merit by an ad hoc panel of experts in the subject field of the

specific application. Responsive applications will also be subject to a second level of review by a National Advisory Council for concurrence with the recommendations made by the first level reviewers. Final funding decisions will be made by the Commissioner of Food and Drugs or his designee.

B. Review Criteria

The funding priority categories are as follows:

Project Objective 1–first priority

Project Objective 2–second priority

Project Objective 3–third priority

All comments received on these funding priority categories will be taken into consideration and will receive a written response.

Applicants must clearly state in their applications which of the previously listed established funding priority categories is relevant to their proposed project. Applications will be grouped, reviewed, and ranked within each funding priority category. Funding priority will start with the highest ranked applications under each of the three objectives, then the second highest, etc., until available funds have been exhausted. All applications will be evaluated by program and grants management staff for responsiveness. Applications considered nonresponsive will be returned to the applicant, without being reviewed. Applicants are strongly encouraged to contact FDA to resolve any questions regarding criteria prior to the submission of their application. All questions of a technical or scientific nature must be directed to the CFSAN program staff and all questions of an administrative or financial nature must be directed to the grants management staff. (See **FOR FURTHER INFORMATION CONTACT** caption at the beginning of this document.) Applications will be reviewed and scored on the following criteria:

1. Research should be proposed on microbiological sampling or intervention strategies that is within one of the three objectives listed in section II of this document;

2. Whether the proposed study is within the budget and costs have been adequately justified and fully documented;

3. Soundness of the rationale for the proposed study and appropriateness of the study design to address the objectives of the RFA;

4. Availability and adequacy of laboratory facilities and equipment;

5. Availability and adequacy of support services (e.g., biostatistical computer, data bases, etc.,); and

6. Research experience, training, and competence of the principal investigator and support staff.

VII. Submission Requirements

The original and five copies of the completed Grant Application Form PHS 398 (Rev. 5/95) or the original and two copies of Form PHS 5161 (Rev. 7/92) for State and local governments, with copies of the appendices for each of the copies, should be delivered to Robert L. Robins (address above). State and local governments may choose to use Form PHS 398 in lieu of the Form PHS 5161. The application closing date is July 13, 1998. If the receipt date falls on a weekend, it will be extended to Monday; if the date falls on a holiday, it will be extended to the following work day. No supplemental or addendum material will be accepted after the closing date. The outside of the mailing package and item 2 of the application face page should be labeled, ''Response to RFA FDA CFSAN–98–2, Project Objective 1 (2 or 3).''

VIII. Method of Application

A. Submission Instructions

Applications will be accepted during normal working hours, 8 a.m. to 4:30 p.m., Monday through Friday, on or before the established closing date. Applications will be considered received on time if sent or mailed on or before the closing date as evidenced by a legible U.S. Postal Service dated postmark or a legible date receipt from a commercial carrier, unless they arrive too late for orderly processing. Private metered postmarks shall not be acceptable as proof of timely mailing. Applications not received on time will not be considered for review and will be returned to the applicant. (Applicants should note that the U.S. Postal Service does not uniformly provide dated postmarks. Before relying on this method, applicants should check with their local post office.)

Do not send applications to the Center for Scientific Research (CSR), National Institutes of Health (NIH). Any application that is sent to NIH, that is then forwarded to FDA and not received in time for orderly processing, will be deemed unresponsive and returned to the applicant. Instructions for completing the application forms can be found on NIH home page on the Internet (address: ''http://www.nih.gov.grants/funding/phs398/phs398.html''; the forms can be found at ''http://www.nih.gov/grants/funding/phs398/forms-toc.html''). However, as noted previously, applications are not to be mailed to NIH. Applicants are advised that FDA does not adhere to the page limitations or the type size and line spacing requirements imposed by NIH on its applications. Applications must be submitted via mail delivery as stated previously. FDA is unable to receive applications via the Internet.

B. Format for Application

Submission of the application must be on Grant Application Form PHS 398 (Rev. 5/95). All ''General Instructions'' and ''Specific Instructions'' in the application kit should be followed with the exception of the closing dates and the mailing label address. Do not send applications to the CSR, NIH. Applications from State and local governments may be submitted on Form PHS 5161 (Rev. 7/92) or Form PHS 398 (Rev. 5/95).

The face page of the application should reflect the RFA number RFA–FDA–CFSAN–98–2, Project Objective 1 (2 or 3).

Data included in the application, if restricted with the legend specified below, may be entitled to confidential treatment as trade secret or confidential commercial information within the meaning of the Freedom of Information Act (FOIA) (5 U.S.C. 552(b)(4)) and FDA's implementing regulations (21 CFR 20.61).

Information collection requirements requested on Form PHS 398 and the instructions have been submitted by PHS to the Office of Management and Budget (OMB) and were approved and assigned OMB control number 0925–0001.

C. Legend

Unless disclosure is required by FOIA as amended (5 U.S.C. 552) as determined by the freedom of information officials of DHHS or by a court, data contained in the portions of this application which have been specifically identified by page number, paragraph, etc., by the applicant as containing restricted information shall not be used or disclosed except for evaluation purposes.

Dated: May 18, 1998.

William B. Schultz,

Deputy Commissioner for Policy.

[FR Doc. 98–13918 Filed 5–26–98; 8:45 am]

BILLING CODE 4160–01–F

DEPARTMENT OF HEALTH AND HUMAN SERVICES

Food and Drug Administration

Research Studies To Support Microbial Risk Assessment Modeling; Availability of Cooperative Agreements; Request for Applications; Correction

AGENCY: Food and Drug Administration, HHS.

ACTION: Notice; correction.

SUMMARY: The Food and Drug Administration (FDA), Center for Food Safety and Applied Nutrition (CFSAN) is correcting a document that appeared in the **Federal Register** of May 4, 1998 (63 FR 24553). The document announced the availability of approximately $800,000 for research funds for fiscal year (FY) 1998 to conduct research to support the development of risk assessment dose-response models for microbiological hazards associated with food. The document was published with an inadvertent error. This document corrects that error.

DATES: Submit applications by June 18, 1998. If the closing date falls on a weekend, it will be extended to Monday; if the date falls on a holiday, it will be extended to the following workday.

FOR FURTHER INFORMATION CONTACT: Wes R. Long, Center for Food Safety and Applied Nutrition, Food and Drug Administration (HFS–301), 200 C St. SW., Washington, DC 20204, 202–205–4064.

SUPPLEMENTARY INFORMATION: In FR Doc. 98–11743, appearing on page 24553 in the **Federal Register** of Monday, May 4, 1998, the following correction is made:

1. On page 24555, in the third column, in the first full paragraph beginning in the fourth line, ''Shiga-like toxin-producing *Cryptosporidium parvum*, pathogenic *Escherichia coli*, *Listeria monocytogenes*, Norwalk virus, *Salmonella* spp., *Shigella* spp., *Vibrio* spp., and *Staphyloccocus* spp. enterotoxin. * * *'' is corrected to read ''*Cryptosporidium parvum*, Shiga-like toxin producing pathogenic *Escherichia coli*, *Listeria monocytogenes*, Norwalk virus, *Salmonella* spp., *Shigella* spp., *Vibrio* spp., and *Staphyloccocus* spp. enterotoxin.* * *''

Dated: May 14, 1998.

William K. Hubbard,

Deputy Commissioner for Policy Coordination.

[FR Doc. 98–13916 Filed 5–26–98; 8:45 am]

BILLING CODE 4160–01–F

DEPARTMENT OF HEALTH AND HUMAN SERVICES

Substance Abuse and Mental Health Services Administration

Extension of Receipt Date for Applications

AGENCY: Substance Abuse and Mental Health Services Administration (SAMHSA).

ACTION: Notice of Extension of Receipt Date for Applications for SAMHSA's Center for Substance Abuse Treatment (CSAT) Cooperative Agreements for State Treatment Outcomes and Performance Pilot Studies Enhancement Program (Short Title: TOPPS II; GFA No. TI 98–005).

A Notice of Funding Availability for seven SAMHSA programs was published in the **Federal Register** on April 8, 1998 (Vol. 63, No. 67; pages 17197–17203). The receipt date for applications for the seven programs listed was June 8, 1998. Subsequently, a decision was made to extend the deadline for the receipt of applications from June 8, 1998 to June 19, 1998 for the Cooperative Agreements for State Treatment Outcomes and Performance Pilot Studies Enhancement (TOPPS II) program *only*. The June 8, 1998 receipt date for the other six programs remains the same.

The programmatic contact for the TOPPS II program is: Sheila Harmison, D.S.W., Division of State and Community Assistance, CSAT, SAMHSA, Rockwall II Building, Suite 880, 5600 Fishers Lane, Rockville, MD 20857; telephone (301) 443–7524.

Dated: May 19, 1998.

Richard Kopanda,

Executive Officer, SAMHSA.

[FR Doc. 98–13915 Filed 5–26–98; 8:45 am]

BILLING CODE 4162–20–P

INTERNATIONAL BOUNDARY AND WATER COMMISSION NOTICE

Border Environment Cooperation Commission (BECC); Public Meeting

SUMMARY: This notice announces the XVI public meeting of the BECC Board of Directors on Wednesday, June 24, 1998, from 10:00 a.m.–2:00 p.m. in Saltillo, Coahuila, Mexico, at the Universidad Autonoma de Coahuila, located on Blvd. Venustiano Carranza y Gonzalez Lobo.

FOR FURTHER INFORMATION CONTACT: M.R. Ybarra, Secretary, United States Section, International Boundary and Water Commission, telephone: (915) 832–4105; or Angeles Villarreal, Public Participation Officer, Border Environment Cooperation Commission, P.O. Box 221648, El Paso, Texas 79913, telephone: (011–52–16) 25–91–60; fax: (011–52–16) 25–26–99; e-mail: becc@cocef.org.

SUPPLEMENTARY INFORMATION: The U.S. Section, International Boundary and Water Commission, on behalf of the Border Environment Cooperation Commission (BECC), cordially invites the public to attend the XVI Public Meeting of the Board of Directors on Wednesday, June 24, 1998, from 10:00 a.m.–2:00 p.m., at the Universidad Autonoma de Coahuila, located on Blvd. Venustiano Carranza y Gonzalez Lobo in Saltillo, Coahuila, Mexico. Proposed Agenda, 10:00 a.m.–2:00 p.m.

1. Approval of Agenda (Action)
2. Approval of Minutes of Meeting of March 30, 1998 (Action)
3. General Manager's Report (Information)
4. Review of Projects for Certification (Action)
   * Calexico, CA
   * Lower Valley, TX
   * Donna, TX
   * Public Comments
5. Approval of Technical Assistance Grants (Action)
6. Update on Technical Assistance Program (Information)
7. Other Matters (Information)
   * Report on Sustainable Development Committee
8. General Public Comments

Anyone interested in submitting written comments to the Board of Directors on any agenda item should send them to the BECC 15 days prior to the public meeting. Anyone interested in making a brief statement to the Board may do so during the public meeting.

Dated: May 20, 1998.

M.R. Ybarra,

Secretary, U.S. IBWC.

[FR Doc. 98–13962 Filed 5–26–98; 8:45 am]

BILLING CODE 4710–03–P

DEPARTMENT OF THE INTERIOR

Fish and Wildlife Service

Permit Amendment for the Natomas Basin Habitat Conservation Plan, Sacramento and Sutter Counties, CA

AGENCY: Fish and Wildlife Service, Interior.

ACTION: Notice of permit amendment.

SUMMARY: On December 31, 1997, the Service issued an incidental take permit pursuant to section 10(a)(1)(B) of the

Endangered Species Act of 1973, as amended, to the City of Sacramento, California, for the Natomas Basin Habitat Conservation Plan (Plan). The assigned permit number is PRT–823773. Prior to issuance of the incidental take permit, the Service had agreed, in settlement of pending court litigation *Spirit of the Sage Council* v. *Babbitt* (D.D.C.), to request public comment on the appropriateness of including the Department of the Interior's and Department of Commerce's joint Habitat Conservation Plan Assurances (''No Surprises Assurances'') in all incidental take permit applications noticed for public comment in the **Federal Register** after March 18, 1997, pending a final determination by the agencies regarding the policy. In the **Federal Register** notice of June 18, 1997 (62 FR 33400), the Service specifically requested public comment on the No Surprises assurances in the Plan. In a subsequent stipulation in the litigation, the Service agreed not to issue any incidental take permits after December 29, 1997, that contained No Surprises Assurances until making a final determination on the proposed No Surprises rule. Because the Plan had been completed and the permit applicant wished to proceed with activities under the Plan, the Service issued the permit on December 31, 1997, without the ''No Surprises'' assurances that otherwise would have accompanied the permit. This was accomplished by adding term and condition K. to the permit which rendered inoperative the No Surprises assurances contained in the Plan and Implementing Agreement. On February 23, 1998, the Department of the Interior (Fish and Wildlife Service) and Department of Commerce (National Marine Fisheries Service) published the Habitat Conservation Plan Assurances (''No Surprises'') final rule (63 FR 35), thus fulfilling the final condition of the court settlement.

The purpose of the proposed permit amendment is to reinstate the ''No Surprises'' assurances into the City of Sacramento's incidental take permit for the Natomas Basin Plan, as described in condition K. of the permit and as outlined in sections 6.9.2–6.9.4 of the Plan's Implementing Agreement. This permit amendment would result in no substantive changes to the Natomas Basin Plan or any of its supporting documents.

DATES: Written comments on the addition of No Surprises Assurances to the incidental take permit should be received on or before June 26, 1998.

ADDRESSES: Comments should be addressed to the Fish and Wildlife Service, Sacramento Fish and Wildlife Office, 3310 El Camino, Suite 130, Sacramento, California 95821–6340. Please refer to permit number PRT–823773 when submitting comments on this provision. Individuals wishing copies of the Plan or Implementing Agreement for review should immediately contact the above office. Documents also will be available for public inspection, by appointment, during normal business hours at the above address.

FOR FURTHER INFORMATION CONTACT: Mr. William Lehman, Sacramento Fish and Wildlife Office, telephone (916) 979–2129.

Dated: May 18, 1998.

Thomas J. Dwyer,

Acting Regional Director, Region 1, Portland, Oregon.

[FR Doc. 98–13950 Filed 5–26–98; 8:45 am]

BILLING CODE 4310–55–P

DEPARTMENT OF THE INTERIOR

Fish and Wildlife Service

Availability of an Environmental Assessment and Receipt of an Application for an Incidental Take Permit for the Quail Hollow Quarry, Santa Cruz County, CA

AGENCY: Fish and Wildlife Service, Interior.

ACTION: Notice of availability.

SUMMARY: Graniterock Company of Watsonville, California, has applied to the Fish and Wildlife Service for an amendment to an incidental take permit pursuant to the Endangered Species Act of 1973, as amended (Act). The Service proposes to issue an amendment to Graniterock's incidental take permit (PRT–830417) for the federally listed endangered Mount Hermon June beetle (*Polyphylla barbata*), Zayante band-winged grasshopper (*Trimerotropis infantilis*), Ben Lomond wallflower (*Erysimum teretifolium*), and Ben Lomond spineflower (*Chorizanthe pungens* var. *hartwegiana*) in the future mining area at the Quail Hollow Quarry, located in Santa Cruz County, California. This notice announces the availability of the permit application and the Environmental Assessment for public review and comment. The permit application includes the Habitat Conservation Plan for the Quail Hollow Quarry and an Implementation Agreement. All comments received, including names and addresses, will become part of the administrative record and may be made available to the public.

DATES: Written comments should be received on or before June 26, 1998.

ADDRESSES: Comments should be addressed to Diane K. Noda, Field Supervisor, Fish and Wildlife Service, 2493 Portola Road, Suite B, Ventura, California 93003. Written comments may also be sent by facsimile to (805) 644–3958.

FOR FURTHER INFORMATION CONTACT: David Pereksta, Fish and Wildlife Biologist, at the above address (telephone: 805–644–1766).

SUPPLEMENTARY INFORMATION:

Availability of Documents

Individuals wishing copies of the documents should immediately contact the Service's Ventura Fish and Wildlife Office at the above referenced address or telephone. Documents will also be available for public inspection, by appointment, during normal business hours at the above address.

Background Information

Graniterock Company (Applicant) currently has authorization from the County of Santa Cruz to mine sand in areas A, B, and C of the Quail Hollow Quarry (known as the current mining area). Mining would be conducted in two phases. The Applicant has completed mining in area A and presently is mining in areas B and C of the current mining area (phase one) where populations of the endangered Mount Hermon June beetle, Zayante band-winged grasshopper, Ben Lomond wallflower, and Ben Lomond spineflower occur. The Applicant received an incidental take permit from the Service for phase one on August 1, 1997. The sand source in the current mining area is expected to last for only a few years. During phase two, the Applicant intends to expand mining into an area known as the future mining area. The Applicant has applied to the Service to amend the initial 3-year incidental take permit to a 100-year permit. For context, the Habitat Conservation Plan covers both the current and future mining areas.

The Applicant needs an incidental take permit from the Service because listed wildlife species are protected against ''take'' pursuant to section 9 of the Act. That is, no one may harass, harm, pursue, hunt, shoot, wound, kill, trap, capture or collect listed animal species, or attempt to engage in such conduct (16 U.S.C. 1538). The Service, however, may issue permits to take listed animal species if such taking is incidental to, and not the purpose of, otherwise lawful activities. Regulations

governing permits for endangered species are at 50 CFR 17.22.

Section 9 of the Act generally does not prohibit take of federally listed plants on private lands unless the take or action resulting in take would violate State law. The Applicants have requested a permit for plants to the extent that their take would be a violation of the Act. Impacts to listed plants also must be addressed in the intra-Service consultation required pursuant to section 7(a) of the Act.

The Service proposes to issue a 100-year permit to the Applicant for incidental take of four listed species during phase two of proposed mining activities in the future mining area of Quail Hollow Quarry. The proposed action would result in the loss of habitat for, and individuals of, the Mount Hermon June beetle, Zayante band-winged grasshopper, Ben Lomond wallflower, and Ben Lomond spineflower in the future mining area as the natural vegetation communities in which they are found are removed during mining operations. This action could directly and indirectly affect the species described above (the Plan Species).

The proposed action would authorize the incidental take of all Mount Hermon June beetles and Zayante band-winged grasshoppers in the future mining area on approximately 83 acres of the 220-acre quarry site. The future mining area contains approximately 27 acres of suitable habitat for these listed wildlife species. In addition, 5 acres of habitat occupied by the Ben Lomond wallflower and 5.5 acres of habitat occupied by the Ben Lomond spineflower would be lost from the future mining area.

The Applicant developed a Habitat Conservation Plan as part of a settlement agreement for litigation it had filed seeking a vested right to mine the entire quarry. This agreement set out to resolve all of the endangered species and habitat protection issues on the property. Under this agreement, the Applicant, Santa Cruz County, Sierra Club, California Native Plant Society, and the South Ridge Watershed Association established the minimum mitigation requirements under which continued sand mining in Quail Hollow Quarry would be allowed. The agreement is in the form of a stipulation for entry of judgment (Stipulation Agreement).

Consistent with this Stipulation Agreement, the Habitat Conservation Plan proposes the following minimization and mitigation measures for phase two mining. At the time the Applicant receives authorization to commence mining in the future mining area, and prior to habitat disturbance within the future mining area, it will: (1) grant a conservation easement in perpetuity to Santa Cruz County for the 20.6-acre West Ridge Habitat Set Aside and provide for protection and long-term management of the area; (2) provide funding for and carry-out long-term management of the 32.6-acre South Ridge Habitat Set Aside which the County of Santa Cruz is legally entitled and committed to purchase at the agreed upon fair market value; (3) implement all provisions of the Habitat Conservation Plan in order to avoid disturbing Plan Species in all areas of the quarry property except for areas within the current and future mining areas, overburden and stockpile areas, and existing access road, as shown in Map 2 of the Habitat Conservation Plan; (4) provide written agreement to protect in perpetuity from any and all disturbance all areas of the project site (except for areas within the current and future mining areas, overburden and stockpile areas, and existing access road as shown in Map 2) containing the Plan Species, State listed species, and County-defined rare, endangered, or threatened species and sensitive habitats; (5) enhance 3 acres of disturbed sand parkland and 5.2 acres of disturbed maritime chaparral on the project site in a location satisfactory to the County of Santa Cruz, the Service and the California Department of Fish and Game; (6) protect and provide long term management of the on-site restoration areas, along with the 32.2-acre North and West Ridge habitat set asides; and (7) revegetate slopes within the future mining area with the goal of reestablishing habitat for the Plan Species.

Environmental Assessment

The Environmental Assessment considers the environmental consequences of the proposed action and no action alternatives. A no take alternative was not feasible due to the widespread distribution of the Plan Species on-site. Under the proposed action, the Applicant would implement phase two of their Habitat Conservation Plan consistent with the Stipulation Agreement (see Background for a description of the proposed action).

Under the no action alternative, the Service would not issue an incidental take permit to the Applicant and a Habitat Conservation Plan would not be implemented. The Applicant would continue to mine areas B and C until the sand supply was exhausted. The Applicant would then reclaim all previously disturbed areas of the quarry consistent with their reclamation plan as required by the Surface Mining and Reclamation Act. The Applicant would be prevented from legally carrying out mining in other areas of the quarry due to the presence of listed animal species in the area. The no action alternative would negate the terms of the Stipulation Agreement and could result in continued and lengthy litigation. In the meantime, the absence of the Habitat Conservation Plan would effectively preclude the sale of the South Ridge property to Santa Cruz County and the establishment of the West Ridge conservation easement.

This notice is provided pursuant to section 10 (a) of the Endangered Species Act and Service regulations for implementing the National Environmental Policy Act of 1969 (40 CFR 1506.6). The Service will evaluate the application, associated documents, and comments submitted thereon to determine whether the application meets the requirements of law. If the Service determines that the requirements are met, a permit will be issued for the incidental take of the listed species. A final decision on permit issuance will be made no sooner than 30 days from the date of this notice.

Dated: May 19, 1998.

David L. McMullen,

Acting Regional Director, Region 1, Portland, Oregon.

[FR Doc. 98–13953 Filed 5–26–98; 8:45 am]

BILLING CODE 4310–55–P

DEPARTMENT OF THE INTERIOR

Bureau of Indian Affairs

Information Collection Submitted to the Office of Management and Budget for Review Under the Paperwork Reduction Act

AGENCY: Bureau of Indian Affairs, Interior.

ACTION: Notice.

SUMMARY: This notice announces that the Bureau of Indian Affairs (BIA) has submitted the proposed renewal of the information collection request for the Housing Assistance Application, codified at 25 CFR Part 256.5, to the Office of Management and Budget (OMB) for approval under the paperwork Reduction Act (44 U.S.C. 3501 *et seq.*). On February 19, 1997, BIA published a notice in the **Federal Register** (62 FR 7469–7470) requesting comments on the proposed information collection. The regulations for the Housing Improvement Program (HIP)

have been modified for the purpose of simplifying administrative guidelines, presenting the regulations in a clear and unambiguous manner (plain English) and making the program more flexible and responsive to the needs of Tribes. The final rule was published in the **Federal Register** (FR 10124–10139) on March 2, 1998. One comment regarding this information collection was received after the close of the prescribed time period published in the **Federal Register**. The OMB requested that the BIA more fully demonstrate compliance with the Privacy Act and that respondents be informed of the legal significance of the displayed OMB control number. The BIA has complied with OMB's request. The BIA is requesting OMB approval of the collection of information on a regular basis, within 30 days.

FOR FURTHER INFORMATION CONTACT: Copies of the collection of information form may be obtained by contacting June Henkel, Bureau of Indian Affairs, Department of the Interior, 1849 C Street NW, MS–4603–MIB, Washington, DC 20240. Telephone: (202) 208–3667.

DATES: OMB is required to respond to this request within 60 days after publication of this notice in the **Federal Register**, but may respond after 30 days; therefore, your comments should be submitted to OMB within 30 days of publication to assure maximum consideration.

ADDRESSES: Your comments and suggestions on the requirements should be made directly to the attention: Desk Officer for the Department of the Interior, Office of Information and Regulatory Affairs, Office of Management and Budget, Room 10102, 725 17th Street NW, Washington DC 20503. Telephone: (202) 395–7340. Please provide a copy to June Henkel, Bureau of Indian Affairs, Department of the Interior, 1849 C Street NW, MS–4603–MIB, Washington, DC 20240. Telephone: (202) 208–3667.

SUPPLEMENTARY INFORMATION:

I. Abstract

The information is needed to establish an applicant's eligibility to receive services under the Housing Improvement Program and to establish the priority order in which eligible applicants may receive services under the program. An agency may not conduct or sponsor, and a person is not required to respond to a collection of information unless it displays a currently valid OMB control number.

II. Request for Comments

We specifically request your comments be submitted to OMB at the address provided above with a copy to the Bureau of Indian Affairs within 30 days concerning the following:

1. Whether the collection of information is necessary for the proper performance of the functions of the BIA, including whether the information will have practical utility;
2. The accuracy of the BIA's estimate of the burden to collect the information, including the validity of the methodology and assumptions used;
3. The quality, utility and clarity of the information to be collected; and,
4. How to minimize the burden of the information collection on those who are to respond, including the use of appropriate automated electronic, mechanical or other forms of information technology.

III. Data

Title of the Collection of Information: Department of the Interior, Bureau of Indian Affairs, Housing Assistance Application.

OMB Number: 1076–0084.

Affected Entities: Individual members of Indian tribes who are living on or near a tribally or legally defined service area.

Frequency of Response: At least annually.

Estimated Number of Annual Responses: 3500.

Estimated Time per Application: ½ hour.

Estimated Total Annual Burden Hours: 1,750 hours.

Dated: April 23, 1998.

Kevin Gover,

Assistant Secretary—Indian Affairs.

[FR Doc. 98–13949 Filed 5–26–98; 8:45 am]

BILLING CODE 4310–02–P

DEPARTMENT OF THE INTERIOR

Minerals Management Service

Extension of Post-Sale Evaluation Period for Central Gulf of Mexico Lease Sale 169

AGENCY: Minerals Management Service, Interior.

ACTION: Notice to extend post-sale evaluation period for Central Gulf of Mexico Lease Sale 169.

SUMMARY: This notice extends by 30 days, the post-sale evaluation period for Central Gulf of Mexico Lease Sale 169. Minerals Management Service (MMS) will complete the evaluation of all bids received in this sale by July 15, 1998. This action is necessary due to the unusually high number of bids received in response to this lease sale.

DATES: The post-sale evaluation period ends on July 15, 1998.

FOR FURTHER INFORMATION CONTACT: Gary L. Lore, Regional Supervisor, Resource Evaluation, Gulf of Mexico Region, telephone (504) 736–2710.

SUPPLEMENTARY INFORMATION: In the Central Gulf of Mexico Sale 169, held March 18, 1998, MMS received 1,188 bids on 794 tracts, 512 of which passed to a second phase required for detailed evaluations. This continued aggressive bidding activity is, in part, due to the enactment of the Outer Continental Shelf Deep Water Royalty Relief Act (Pub. L. 104–58) but is also influenced by other factors, such as the high number of quality prospects on recently expired unexplored tracts in newly established deepwater hydrocarbon plays and by the unprecedented cost-saving technological advances related to hydrocarbon development and production in the Gulf of Mexico's deepwater environment. Consequently, MMS is unable to conduct and complete a comprehensive evaluation and bid review process within the scheduled 90 days, i.e., by June 15, 1998. Under provisions of § 256.47(e)(2), MMS is extending the bid evaluation period until July 15, 1997.

Dated: May 19, 1998.

Chris C. Oynes,

Regional Director.

[FR Doc. 98–13939 Filed 5–26–98; 8:45 am]

BILLING CODE 4310–MR–M

OVERSEAS PRIVATE INVESTMENT CORPORATION

Sunshine Act Meeting

June 9, 1998.

TIME AND DATE: Tuesday, June 9, 1998, 1:00 PM (OPEN Portion), 1:30 PM (CLOSED Portion).

PLACE: Offices of the Corporation, Twelfth Floor Board Room, 1100 New York Avenue, N.W., Washington, D.C.

STATUS: Meeting OPEN to the Public from 1:00 PM to 1:30 PM. Closed portion will commence at 1:30 PM (approx.).

MATTERS TO BE CONSIDERED:

1. President's Report.
2. Approval of March 10, 1998 Minutes (Open Portion).
3. Meeting schedule through March, 1999.

FURTHER MATTERS TO BE CONSIDERED: (Closed to the Public 1:30 PM).

1. Insurance Project in Philippines.

2. Insurance Project in Turkey.
3. Approval of March 10, 1998 Minutes (Closed Portion).
4. Pending Major Projects.
5. Report on OPIC's Small Business Initiative.

CONTACT PERSON FOR INFORMATION: Information on the meeting may be obtained from Connie M. Downs at (202) 336–8438.

Connie M. Downs,

OPIC Corporate Secretary.

[FR Doc. 98–14088 Filed 5–22–98; 10:25 am]

BILLING CODE 3210–01–M

UNITED STATES INTERNATIONAL TRADE COMMISSION

[USITC SE–98–008]

Sunshine Act Meeting

AGENCY HOLDING THE MEETING: United States International Trade Commission.

TIME AND DATE: June 4, 1998 at 11:30 a.m.

PLACE: Room 101, 500 E Street S.W., Washington, DC 20436.

STATUS: Open to the public.

MATTERS TO BE CONSIDERED:

1. Agenda for future meeting: None.
2. Minutes.
3. Ratification List.
4. Inv. Nos. 731–TA–781–786 (Preliminary) (Stainless Steel Round Wire from Canada, India, Japan, Korea, Spain, and Taiwan)—briefing and vote.
5. Outstanding action jackets: None.

In accordance with Commission policy, subject matter listed above, not disposed of at the scheduled meeting, may be carried over to the agenda of the following meeting.

By order of the Commission.

Issued: May 21, 1998.

Donna R. Koehnke,

Secretary.

[FR Doc. 98–14143 Filed 5–22–98; 2:43 pm]

BILLING CODE 7020–02–P

UNITED STATES INTERNATIONAL TRADE COMMISSION

[USITC SE–98–009]

Sunshine Act Meeting

AGENCY HOLDING THE MEETING: United States International Trade Commission.

TIME AND DATE: June 11, 1998 at 11:00 a.m.

PLACE: Room 101, 500 E Street S.W., Washington, DC 20436.

STATUS: Open to the public.

MATTERS TO BE CONSIDERED:

1. Agenda for future meeting: None.
2. Minutes.
3. Ratification List.
4. Inv. No. 753–TA–34 (Extruded Rubber Thread from Malaysia)—briefing and vote.
5. Outstanding action jackets: None.

In accordance with Commission policy, subject matter listed above, not disposed of at the scheduled meeting, may be carried over to the agenda of the following meeting.

By order of the Commission.

Issued: May 21, 1998.

Donna R. Koehnke,

Secretary.

[FR Doc. 98–14144 Filed 5–22–98; 2:43 pm]

BILLING CODE 7020–02–P

FOREIGN CLAIMS SETTLEMENT COMMISSION

[F.C.S.C. Meeting Notice No. 11–98]

Sunshine Act Meeting

The Foreign Claims Settlement Commission, pursuant to its regulations (45 CFR Part 504) and the Government in the Sunshine Act (5 U.S.C. 552b), hereby gives notice in regard to the scheduling of meetings and oral hearings for the transaction of Commission business and other matters specified, as follows:

Date and Time: Monday, June 15, 1998, 10:00 a.m.

Subject Matter: A. Oral Hearings on Objections to Proposed Decisions on claims against Albania, as follows:

10:00 a.m. Claim No. ALB–247 Stephen J. Pantos
10:30 a.m. Claim No. ALB–117 James Elias
11:00 a.m. Claim No. ALB–146 Connie Zotos
11:30 a.m. Claim No. ALB–178 Hariklia Zoto, et al.

B. Hearings on the Record on Objections to Proposed Decisions on claims against Albania, as follows:

1. Claim No. ALB–042 Xhani Femera, et al.
2. Claim No. ALB–072 Thomas M. Toma
3. Claim No. ALB–092 Thanas A. Laske
4. Claim Nos. ALB–137, Klementina Sevo ALB–138 Marianthi Fili
5. Claim No. ALB–153 Bibi Xhemal Bejleri
6. Claim No. ALB–173 Marigo Vasiliades, et al.
7. Claim No. ALB–187 Helena Liolin
8. Claim No. ALB–203 Stavri G. Buri
9. Claim No. ALB–220 Gjergji Gjeli
10. Claim No. ALB–293 Jorgo Stoli

Status: Open.

All meetings are held at the Foreign claims Settlement Commission, 600 E Street, N.W., Washington, DC. Requests for information, or advance notices of intention to observe an open meeting, may be directed to: Administrative Officer, Foreign Claims Settlement Commission, 600 E Street, NW., Room 6002, Washington, DC 20579. Telephone: (202) 616–6988.

Dated at Washington, DC, May 22, 1998.

Judith H. Lock,

Administrative Officer.

[FR Doc. 98–14177 Filed 5–22–98; 2:43 pm]

BILLING CODE 4410–BA–P

DEPARTMENT OF JUSTICE

Immigration and Naturalization Service

Agency Information Collection Activities: Proposed Collection; Comment Request; New Information Collection

ACTION: Notice of information collection; new collection; public charge bond in pilot program.

The Department of Justice, Immigration and Naturalization Service has submitted the following information collection request for review and clearance in accordance with the Paperwork Reduction Act of 1995. The proposed information collection is published to obtain comments from the public and affected agencies. Comments are encouraged and will be accepted for ''sixty days'' until July 27, 1998.

Written comments and suggestions from the public and affected agencies concerning the proposed collection of information should address one or more of the following four points:

(1) Evaluate whether the proposed collection of information is necessary for the proper performance of the functions of the agency, including whether the information will have practical utility;

(2) Evaluate the accuracy of the agencies estimate of the burden of the proposed collection of information, including the validity of the methodology and assumptions used;

(3) Enhance the quality, utility, and clarity of the information to be collected; and

(4) Minimize the burden of the collection of information on those who are to respond, including through the use of appropriate automated, electronic, mechanical, or other technological collection techniques or other forms of information technology, e.g., permitting electronic submission of responses.

Overview of this information collection.

(1) *Type of Information Collection: new information collection.*

(2) *Title of the Form/Collection:* Public Charge Bond in Pilot Program.

(3) *Agency form number, if any, and the applicable component of the Department of Justice sponsoring the collection:* No agency form number. Office of Examinations, Adjudications Division, Immigration and Naturalization Service.

(4) *Affected public who will be asked or required to respond, as well as a brief abstract:* Primary: Individuals or Households. This information collection, contained in a proposed rule, will be used by the Service to determine which districts will be selected to participate in the Bond Pilot Program, as well as what dollar amount of the bond would be for each immigrant in that State, depending on the dollar amount of means-tested benefits available.

(5) *An estimate of the total number of respondents and the amount of time estimated for an average respondent to respond:* 20 responses at 6 hours per response.

(6) *An estimate of the total public burden (in hours) associated with the collection:* 120 annual burden hours.

If you have additional comments, suggestions, or need a copy of the proposed information collection instrument with instructions, or additional information, please contact Richard A. Sloan 202–514–3291, Director, Policy Directives and Instructions Branch, Immigration and Naturalization Service, U.S. Department of Justice, Room 5307, 425 I Street, NW., Washington, DC 20536. Additionally, comments and/or suggestions regarding the item(s) contained in this notice, especially regarding the estimated public burden and associated response time may also be directed to Mr. Richard A. Sloan.

If additional information is required contact: Mr. Robert B. Briggs, Clearance Officer, United States Department of Justice, Information Management and Security Staff, Justice Management Division, Suite 850, Washington Center, 1001 G Street, NW, Washington, DC 20530.

Dated: May 20, 1998.

Robert B. Briggs,

Department Clearance Officer, United States Department of Justice.

[FR Doc. 98–13926 Filed 5–26–98; 8:45 am]

BILLING CODE 4410–18–M

DEPARTMENT OF JUSTICE

Office of Justice Programs

Bureau of Justice Statistics; National Criminal History Improvement Program (NCHIP)

[OJP(BJS)–1175]

RIN 1121–ZA95

AGENCY: Office of Justice Programs, Bureau of Justice Statistics (BJS), Justice.

ACTION: Notice of program plan.

SUMMARY: The Bureau of Justice Statistics (BJS) is publishing this notice to announce the continuation of the National Criminal History Improvement Program (NCHIP) in Fiscal Year 1998. Copies of this announcement can also be found on the Internet at http://www.ojp.usdoj.gov/bjs/.

FOR FURTHER INFORMATION CONTACT: Carol G. Kaplan at (202) 307–0759 (this is not a toll free number).

SUPPLEMENTARY INFORMATION:

The program implements the grant provisions of—

* the Brady Handgun Violence Prevention Act (Brady Act), Pub. L. No. 103159, 107 Stat. 1536 (1993), codified as amended at 18 U.S.C. Sections 921 *et seq.*;

* the National Child Protection Act of 1993 (NCPA), Pub. L. No. 103209, 107 Stat. 2490 (1993), codified as amended at 42 U.S.C. Sections 3759, 5101 note, 5119, 5119a, 5119b, 5119c;

* those provisions of the Omnibus Crime Control and Safe Streets Act of 1968 (Omnibus Act), Pub. L. No. 90–351, 82 Stat. 197 (1968), codified as amended at 42 U.S.C. Sections 3711 *et seq.*, as amended; and the Violent Crime Control and Law Enforcement Act of 1994 (Violent Crime Control Act), Pub. L. No. 103–322, 108 Stat. 1796 (1994), codified as amended at 42 U.S.C. Sections 13701 *et seq.*, which pertain to the establishment, maintenance, analysis, or use of criminal history records and criminal record systems; and,

* related laws pertaining to the identification, collection, analysis and interstate exchange of records relating to domestic violence and stalking (including protection orders) and to the establishment of sexual offender registries and exchange of data between them.

The NCHIP Program to date. The NCHIP program was initiated in 1995, under the administration of the Bureau of Justice Statistics. During Fiscal Years 1995, 1996, and 1997, from the total appropriation of $178.25 million, direct awards were made to all States and eligible territories in an amount totaling over $160 million. Six million dollars was also transferred to the FBI for implementation of the National Instant Criminal Background Check System (NICS), which will provide instant interstate access to records prohibiting the sale of a firearm. About $5 million was awarded to provide direct technical assistance to States, to evaluate the program, and to collect statistics and research data on presale firearm programs.

To date, under the NCHIP program, all States have received funds to upgrade criminal record systems (including establishing and upgrading Automated Fingerprint Identification Systems (AFIS)) and to support efforts to participate in the FBI's Interstate Identification Index (III), which permits instant exchange of criminal records among the States. Eighteen States also received additional funding under the Advanced State Award Program to initiate efforts to identify persons other than felons who are prohibited from purchasing firearms.

Beginning in FY 1996, NCHIP program funds have also been available to States to upgrade record systems to identify and flag persons convicted of abusing children, the elderly, and the disabled, or to defray costs of providing rapid and reliable background checks on individuals who wish to work with these sensitive populations.

Also since 1996, NCHIP program funds have been available to develop and implement procedures for classifying and entering data regarding stalking and domestic violence (including protection orders) into local, State, and national crime information databases consistent with the provisions of the Violence Against Women Act (VAWA).

To date, approximately $10 million has been awarded to States for purposes relating to offenses against children, the elderly and the disabled, and for collection of data on stalking and domestic abuse, including protection orders and violations thereof.

The FY 1998 program. Consistent with the FY 1998 appropriation, funds awarded under the 1998 NCHIP program may be used to improve criminal record systems, to support interstate exchange of records through the FBI, to implement procedures designed to permit participation in the NICS, and for authorized purposes consistent with the NCPA and the identified sections of the VAWA, as described above, and, more fully, in later sections of this announcement.

The FY 1998 NCHIP program also includes the National Sex Offender

Registry Assistance Program (NSOR–AP) under which $25 million was appropriated for grants to assist States in upgrading sex offender registries and providing data to the FBI Sex Offender Registry. The NSOR–AP program is a component of NCHIP but is funded separately pursuant to a separate application.

Commitment to full implementation of the National Instant Criminal Background Check System (NICS). The Brady Act in Section 103(b) requires the establishment of a national system to provide instant background checks to determine if a potential firearm purchaser is a felon or otherwise prohibited from purchase of a firearm under Federal or State statute. Consistent with the statutory requirement, the National Instant Criminal Background Check System (NICS), which will be operated by the FBI, will become operational in November 1998, and Federal waiting period requirements will no longer be applicable.

The effectiveness of NICS will depend on the extent to which the most accurate and complete records of Federal and State criminal offenses and records in other prohibiting categories are instantly available in response to inquiries from firearms dealers.

Under the NICS configuration, States are encouraged to serve as a ''Point of Contact'' (POC) interfacing between firearm dealers and the FBI's national record system. Where the State is a POC, firearm dealers will receive instant access to (1) the most complete and up-to-date State criminal records, (2) State-held records of noncriminal factors that prohibit firearm purchase, and (3) State personnel who can best interpret records and their modifications. BJS supports States that will be facilitating background checks in this way by allowing NCHIP funds to be used to cover costs associated with the purchase of equipment, development of software, training, and other listed costs associated with the NICS (for details, see ''Allowable Costs,'' below). Considering that the NICS is to become operational in November 1998, requests for funds in this category will receive priority consideration.

In States not opting to serve as a POC, inquiries will be made directly from the firearm dealers to the FBI.

The Brady Act also allows States to meet their presale firearm check requirements through an ATF-approved permit system. To assist States following this procedure, NCHIP funds may be used to cover costs associated with development and implementation of procedures that will meet ATF requirements for a permit system to be approved as an alternative to instant checks at the time of sale.

Commitment to participation in the Interstate Identification Index (III). Participation by all States in the Interstate Identification Index (III) is critical to ensuring that the most accurate and complete criminal records are available instantly not only for NICS presale firearm checks, but also for background check inquiries regarding persons seeking positions involving national security; persons with responsibility for children, the elderly or the disabled, and other authorized purposes. Instant interstate availability of complete records is also vital to supporting effective law enforcement strategies involving pretrial release, determinate sentencing, and correctional assignment. At present, 36 States participate in III.

The NCHIP FY 1997 program announcement emphasized the BJS commitment to full State participation in the FBI's Interstate Identification Index (III). In light of the importance of III participation, BJS has again identified III participation as a priority goal of the NCHIP program and requires States that are not currently III members to specify whether funding already committed is adequate to assure III participation and, if not, to focus 1998 NCHIP funds on activities that further this goal.

Commitment to support court efforts relating to development of record systems. Recent laws establishing requirements for background checks for firearms sales and in connection with positions of responsibility with children, the elderly and the disabled have emphasized the importance of records being complete with dispositions. Moreover, other statutes have highlighted the importance of immediate statewide and interstate access to protection orders related to domestic violence. These requirements can only be met if information initially developed by the courts is available on a complete and immediate basis. BJS is committed to recognizing the importance of the courts in all of these efforts, and applicants should ensure that in developing NCHIP operational and funding plans, adequate attention is directed at the role and needs of the courts.

Program Goals. The goal of the NCHIP grant program is to improve the Nation's public safety by—

* Facilitating the accurate and timely identification of persons who are ineligible to purchase a firearm;

* Ensuring that persons with responsibility for child care, elder care, or care of the disabled do not have disqualifying criminal records;

* Improving access to protection orders and records of people wanted for stalking and domestic violence; and

* Enhancing the quality, completeness and accessibility of the Nation's criminal history record systems and the extent to which such records can be used and analyzed for criminal justice related purposes.

More specifically, NCHIP is designed to assist States—

* To expand and enhance participation in the FBI's Interstate Identification Index (III) and the National Instant Criminal Background Check System (NICS);

*To meet timetables for criminal history record completeness and participation in the III, as established for each State by the Attorney General;

*To improve the level of criminal history record automation, accuracy, completeness, and flagging;

*To develop and implement procedures for accessing records of persons other than felons who are ineligible to purchase firearms;

*To identify (through interface with the National Incident-Based Reporting System [NIBRS] where necessary) records of crimes involving use of a handgun and/or abuse of children, the elderly, or disabled persons;

* To identify, classify, collect, and maintain (through interface with the National Crime Information Center [NCIC] and the III where necessary) protection orders, warrants, arrests, and convictions of persons violating protection orders intended to protect victims of stalking and domestic violence and to support the development of State sex offender registries and the interface with a national sex offender registry; and,

* To ensure that States develop the capability to monitor and assess State progress in meeting legislative and programmatic goals.

To ensure that all NCHIP-funded efforts support the development of the national criminal record system, the program is closely coordinated with the FBI, the Bureau of Justice Assistance, and the Bureau of Alcohol, Tobacco and Firearms (ATF).

Legislative Background. Section 106 (b) of the Brady Act provides that—

> The Attorney General, through the Bureau of Justice Statistics, shall, subject to appropriations and with preference to States that as of the date of enactment of this Act have the lowest percent currency of case dispositions in computerized criminal history files, make a grant to each State to be used (A) for the creation of a computerized criminal history record system or

improvement of an existing system; (B) to improve accessibility to the national instant criminal background system; and (C) upon establishment of the national system, to assist the State in the transmittal of criminal records to the national system.

The provisions of 18 U.S.C. Sections 922 (g) and (n), as amended by the Violent Crime Control Act and the ''Lautenberg amendment,'' prohibit the sale of firearms to an individual who—

(1) Is under indictment for, or has been convicted in any court, of a crime punishable by imprisonment for a term exceeding 1 year;

(2) Is a fugitive from justice;

(3) Is an unlawful user of, or addicted to, any controlled substance;

(4) Has been adjudicated as a mental defective or been committed to a mental institution;

(5) Is an alien who is illegally or unlawfully in the United States;

(6) Was discharged from the Armed Forces under dishonorable conditions;

(7) Has renounced United States citizenship;

(8) Is subject to a court order restraining them from harassing, stalking, or threatening an intimate partner or child; or

(9) Has been convicted in any court of a misdemeanor crime of domestic violence.

Category 9, included as the ''Lautenberg amendment'' in the Omnibus Consolidated Appropriations Act of 1997, P.L. 104–208, 110 Stat 3009, became effective on October 1, 1996. See Appendix A of this announcement for text of the amendment, which includes applicable definitions.

The Brady Act, enacted in November 1993 and effective in February 1994, established interim provisions that are applicable until the NICS is operational. Under the interim provisions, licensed firearm dealers request a presale check on all potential handgun purchasers by the chief law enforcement officer in the purchaser's residence community to determine, based on available records, if the individual is legally prohibited from purchase of the firearm under the provisions of the Gun Control Act (18 U.S.C. Section 922) or State law. The sale may not be completed for 5 days unless the dealer receives an approval before that time. The interim provisions, including the Federal imposition of a 5-day waiting period, terminate when the NICS becomes operational. Section 103 of the Brady Act provides that NICS will supply information on ''whether receipt of a firearm * * * would violate (18 U.S.C. Section 922) or State law.'' As noted above, Section 106(b) of the Brady Act establishes a grant program that not only assists States in upgrading criminal record systems, but also assists States in improving access to and interface with the NICS.

In addition, Section 106(a) of the Brady Act amended Section 509(d) of the Omnibus Crime Control and Safe Streets Act to specifically provide that funds from the 5% set-aside under the Byrne Formula grant program may be spent for ''the improvement of State record systems and the sharing * * * of records * * * for the purposes of implementing * * * (the Brady Act).''

The Child Protection Act, as amended by the Violent Crime Control Act, requires that records of abuse against children be transmitted to the FBI's national record system. The Child Protection Act also encourages States to adopt laws requiring background checks on individuals prior to assuming responsibility for care of children, the elderly, or the disabled.

Section 4 of the Act establishes a grant program to assist States in upgrading records to meet the requirements of the Act. Under the definition set forth in Section 5(3) of the Act, ''child abuse crimes'' include crimes under any law of the State and are not limited to felonies.

Both the Brady and Child Protection Acts required the Attorney General to survey the status of State criminal history records and develop timetables for States to achieve complete and automated records. The survey was conducted during March 1994, and State governors were advised of timetables by the Attorney General in letters of May and June 1994. The letters indicated that compliance with timetable goals and the ability to join III by November 1998 was to be contingent upon availability of grant funds under each Act.

The National Stalker and Domestic Violence Reduction program (Stalker Reduction), (Section 40602 of the Violence Against Women Act (VAWA), Pub. L. No. 103–322) authorized a program to assist States in entering data on stalking and domestic violence into local, State, and national databases. The Act emphasizes the importance of ensuring that data on convictions for these crimes are included in databases being developed with Federal funds. Section 40606 of VAWA authorized technical assistance and training in furtherance of the purposes of the Stalker Reduction program. This section also allows for the evaluation of programs that receive funds under this provision.

Section 40602(b) of the Violent Crime Control Act further provides that in order to be eligible to receive funds for Domestic Violence/Stalker Reduction program activities, a State shall certify that it has or intends to establish a program that enters into the National Crime Information Center the following records:

* Warrants for the arrest of persons violating protection orders intended to protect victims from stalking or domestic violence;

* Arrests or convictions of persons violating protection or domestic violence orders; and

* Protection orders for the protection of persons from stalking or domestic violence.

The NCHIP program implements the requirements of the programs established in the Brady Act, Child Protection Act, and the Domestic Violence/Stalker Reduction provisions of VAWA.

Appropriation. Section 106 (b) of the Brady Act authorized $200 million for the grant program; the Child Protection Act authorized $20 million; Section 40603 of the Violent Crime Control Act authorized a total of $6 million over 3 years for the Domestic Violence/Stalker Reduction program included in VAWA. Pursuant to these authorizations, the Brady, Child Protection, and Domestic Violence/Stalker Reduction Acts are combined under the NCHIP program.

FY 1995: An appropriation of $100 million was made to implement Section 106 (b) of the Brady Act for FY 1995, to be available until expended. No appropriation was made for activities authorized under the Child Protection Act or the Domestic Violence/Stalker Reduction provisions of VAWA in FY 1995.

FY 1996: An appropriation of $25 million was made in FY 1996 to continue implementation of Section 106 (b) of the Brady Act and to implement Section 4 (b) of the Child Protection Act. In addition an appropriation of $1.5 million was made in FY 1996 for the Domestic Violence/Stalker Reduction component of the program.

FY 1997: In FY 1997, an appropriation of $50 million was made to further the implementation of Section 106 (b) of the Brady Act and Section 4 (b) of the Child Protection Act. $1.75 million was appropriated for Domestic Violence/Stalker Reduction activities.

FY 1998: The FY 1998 appropriation for criminal record improvement was $45 million. For purposes relating to Domestic Violence/Stalker Reduction, an appropriation of $2.75 million was also made in FY 1998.

To date, approximately $10 million has been awarded for purposes authorized under the NCPA and the Domestic Violence/Stalker Reduction

provisions of the VAWA. In recognition of the importance of these issues, up to $16 million of the 1998 appropriation will be available to be awarded for these purposes. Of this amount, the full $2.75 million appropriated to BJS for Domestic Violence/Stalker Reduction activities under VAWA in 1998 will be allocated for purposes associated with development/enhancement of protection order files, including interface with the FBI's national protection order file.

The FY 1998 NCHIP program also includes the National Sex Offender Registry Assistance Program (NSOR–AP) under which $25 million was appropriated for grants to assist States in upgrading sex offender registries and providing data to the FBI Sex Offender Registry. The NSOR–AP program is a component of NCHIP but is funded separately pursuant to a separate application.

Application and Award Process. Eligibility requirements. Only one application will be accepted from each State. The application must be submitted by the agency designated by the State Governor. A State may, however, choose to submit its application as part of a multistate consortium or other entity. In such case, the application should include a statement of commitment from each State and be signed by an individual designated by the Governor of each participating State. The application should also indicate specific responsibilities and include a separate budget for each State.

A grant will be made to each eligible applicant State with funds from the 1998 appropriation. All States, including States previously designated as ''priority States,'' are eligible to receive funds for activities relating to criminal records improvement and NICS participation, as well as the additional purposes authorized under the Child Protection Act and the Domestic Violence/Stalker Reduction legislation, as described in this announcement.

States may submit an application even though funds remain unexpended under the previous NCHIP awards. In such a case, the application should describe the efforts undertaken to date, the specific reasons that funds remain unexpended, and the anticipated time when funds will be expended.

FY 1998 projects may overlap with FY 1997 projects or the projects may run consecutively.

Program narrative. In addition to the requirements set forth in Appendix A, the NCHIP application should include the following four parts. States may, at their option, satisfy requirements noted below by referencing or summarizing previous applications. Additionally, States in which the applicant agency is the same under the BJS NCHIP and Bureau of Justice Assistance (BJA) State Identification Systems (SIS) program may also choose to submit duplicate material to BJS and BJA under Part I (Background) and Part II (Identification of Needs), below.

Part I. Background

This section should include a short update of current efforts relating to criminal history record improvement funded under the BJS NCHIP, Advanced State Award Program (ASAP), Criminal History Record Improvements (CHRI) programs, and the BJA Byrne 5% set-aside, or with State funds during the past year. Where applicable, the section should also include a reference to projects that are, or may be, funded under the State Identification Systems (SIS) Formula Grant program administered by BJA. The discussion should also specify total funds awarded to the State under NCHIP, Byrne, and SIS programs (if SIS funding is used for criminal history record improvements) and the funds in each category remaining at the time of application.

Part II. Identification of Needs

This part should discuss any evaluative efforts undertaken to identify the key areas of weakness in the State's criminal record system since submission of the last NCHIP application. The application should also indicate those areas that must be addressed in order to enable the State to identify ineligible firearm purchasers, persons ineligible to hold positions involving children, the elderly, or the disabled, and people wanted, arrested, or convicted of stalking and/or domestic violence offenses, including violations of protection orders.

States that are not members of III at the time of application must include a section identifying the tasks remaining to permit III participation. This section must specifically state whether funding already available is adequate for the State to participate in III and the planned month and year of participation in III. If funding already available is not adequate, the State is expected to apply for NCHIP funding that will permit the State to participate in III.

Part III. NCHIP Effort

This section should describe the activities to be undertaken with NCHIP funds over the 12-month period. Specifically, each application should indicate the activities proposed, how these activities relate to efforts funded under the previous NCHIP awards, and the results that will be achieved from FY 1998 funding. In order to permit assessment of State progress in meeting grant goals, this section should also set forth measurable benchmarks or goals for each proposed activity.

States that are not members of III must include a description and timetable for activities that are specifically designed to permit such participation.

Part III of the application should also describe any efforts to be supported to monitor State compliance with legislative or programmatic goals through ongoing audits or other means such as statistical analysis or comparison between Computerized Criminal History (CCH) records and National Incident-Based Reporting System (NIBRS) or Uniform Crime Reporting (UCR) data. Studies relating to handgun use or sales approval, if proposed, should be described in this section.

In addition, to ensure program continuity and emphasize the importance of judicial efforts in meeting newly established record requirements, the application should indicate the level of funds that will be made directly available to the courts, where the courts are the appropriate source for data on dispositions or other record data.

The Bureau of Justice Statistics will coordinate the Domestic Violence/Stalker Reduction portion of NCHIP with the Violence Against Women Office (VAWA) at the Department of Justice.

Part IV. Coordination

Byrne Formula Funds: Funds under the Byrne Formula 5% set-aside program are available to support the improvement of record systems and to meet the goals of the Brady and Child Protection Acts.

The Bureau of Justice Statistics and the Bureau of Justice Assistance have jointly agreed that close and continuing coordination between the NCHIP and Byrne 5% set-aside program is critical to meeting the goals of the Brady Act and the National Child Protection Act. Such coordinated efforts are also necessary to ensure the development of an effective interstate criminal history record system to meet the needs of law enforcement, the criminal justice community, and the increasing number of noncriminal justice users of criminal history record information. To achieve this goal, BJS and BJA prepared guidelines governing use of the Byrne 5% set-aside funds. The guidelines were issued February 23, 1995 to State administrative agencies that receive and distribute Byrne formula grant funds.

To avoid overlap and maximize funding effectiveness, BJS expects that program plans for projects to be funded under NCHIP and the Byrne 5% set-aside will be coordinated by the State agencies responsible for these programs. Where costs of a proposed activity exceed NCHIP available funds or are unallowable under NCHIP, the State might, for example, use Byrne funds to fill remaining needs. This joint effort will maximize the effectiveness of these programs.

State Identification Systems (SIS) Program: In May 1997, BJA announced the State Identification Systems (SIS) Formula Grant Program, under which States are eligible to apply for funds to ''establish, develop, update or upgrade—

(A) computerized identification systems that are compatible and integrated with the databases of the National Crime Information Center (NCIC) of the FBI;

(B) the capability to analyze DNA in a forensic laboratory in ways that are compatible and integrated with the combined DNA Identification System (CODIS) of the FBI; and

(C) automated fingerprint identification systems that are compatible and integrated with the Integrated Automated Fingerprint Identification System (IAFIS) of the FBI.''

NCHIP applications should insure that efforts under these programs will be coordinated. Information copies of the proposed activities to be funded under the SIS program will be provided to BJS for inclusion as part of the State's NCHIP file.

Other Federal funding: To ensure coordination of Federal funding efforts, the application should include information on other current awards or pending applications for Federal funding to support activities for which funds are being requested in the current NCHIP application. Where relevant, such information should indicate the amount of the other award, the grantor agency, and the program purpose.

Award Period and Budget. Awards may be for up to 12 months. Since the FY 1998 NCHIP program builds on the long-term NCHIP activity, States will have the flexibility to begin FY 1998 funded activities immediately upon award or as late as the summer of 1999. Activities must be completed by June 1, 2000. Applicants are also encouraged to incorporate or reference pages of previously submitted materials, when appropriate.

The budget should provide details for expenses in required categories and by individual task (see Appendix A, Application content). The application should identify those agencies to receive direct funding and indicate the fiscal arrangements to accomplish fund transfer.

Application Submission and Due Dates. Applications may be submitted at any time after publication of this announcement. Applications must be received by June 30, 1998, to be eligible for funding from the FY 1998 appropriation.

To minimize administrative burdens, States may resubmit parts of previous proposals that did not receive funds under previous NCHIP awards, accompanied by a current budget.

Review Criteria. States should understand that full funding may not be possible for all proposed activities. Allocation of funds will be based on the amount requested and the following factors:

(1) The extent to which funds will support participation in NICS, State efforts to become a III participant, and meet the timetables established for the State by the Attorney General;

(2) The extent to which improvements in the State system, by virtue of record numbers, levels of technical development, or operating procedures, will have a major impact on availability of records throughout the national system;

(3) The proposed use or enhancement of innovative procedures which may be of value to other jurisdictions;

(4) The technical feasibility of the proposal and the extent to which the proposal appears reasonable in light of the State's current level of system development and statutory framework;

(5) The total amount already awarded under previous NCHIP program announcements;

(6) The extent to which the State has fulfilled goals of previous NCHIP grants, expended funds awarded in previous grants, and demonstrated a commitment to criminal history record improvement through activities under the NCHIP program;

(7) State commitment to the national record system as evidenced by membership in III, participation in the FBI's National Fingerprint File (NFF) and Felon Identification in Firearms Sales (FIFS) programs, etc., and the current status of development of its CCH;

(8) Reasonableness of the budget;

(9) Evidence of State progress in meeting record improvement and background check goals as measured in terms of audits, and meeting data collection goals relating to presale firearm checks and background checks on persons seeking positions involving children, the aged and the disabled;

(10) Appropriate focus on criminal history data improvement regarding protection orders and crimes against children, the elderly, and the disabled;

(11) Nature of the proposed expenditures;

(12) The extent to which the plan reflects constructive interface between relevant components of the State organization and/or multistate systems;

(13) The reasonableness of the relationship between the proposed activities and the current status of the State system, in terms of technical development, legislation, current fiscal demands, and future operating costs.

The program does not require either ''hard'' (cash) or ''soft'' (in-kind) match. Indications of State support, however, may be interpreted as expressions of commitment by the State to the program.

All applicants must agree to participate in evaluations sponsored by the Federal Government. Applicants must also agree to provide data relating to Brady Act activity to the Firearm Inquiry Statistics Program (FIST) in the format designated by the FIST.

Allowable Costs. Allowable expenses are detailed below. All expenses are allowable only to the extent that they directly relate to programs described in the application's program narrative.

(1) Participation in III. This is a key goal. Covered costs include, but are not limited to, costs associated with automation of the database, synchronization of records between the State and the FBI, and development of necessary software and hardware enabling electronic access on an intrastate or interstate basis.

(2) Database enhancement. Improving the quality, completeness, and accuracy of criminal history records is a key goal of the NCHIP effort. Allowable costs include the costs associated with implementing improved record capture procedures, establishing more effective accuracy controls, and ensuring that records of all criminal events that start with an arrest or indictment are included in the database.

In addition to felony records, funds may be used to capture data on domestic violence misdemeanors and to ensure that data on persons convicted of abuse of children, the elderly, and the disabled and/or stalking and domestic violence offenses (including protection orders and violations thereof) are included in the database.

States that currently participate in III may also use limited funds to identify and develop access to data on other categories of persons prohibited from

firearm purchase under recent amendments to the Gun Control Act (18 U.S.C. Section 922), as incorporated in the Brady Act. States proposing use of funds for these purposes must demonstrate in the application that results of applicable pilot efforts supported under the NCHIP Advanced State Award Program (ASAP) have been considered and that necessary protections for individual privacy will be incorporated in the proposed procedures. Information about current NCHIP-supported efforts in these areas and relevant State contacts is available through the BJS Internet site.

(3) Improved capture of case disposition. Automated interface between the criminal history repository and the courts, prosecutors, and/or corrections agencies is encouraged. Funds provided to courts or prosecutors for these purposes are allowable only to the extent that the function to be supported is related to the capture of disposition or other data relating to the offender record (for example, full costs associated with establishment of court Management Information Systems (MIS) are not allowable under the NCHIP program).

(4) Flagging of records. Upgrading the accessibility of records through flagging for presale and preemployment checks is an important activity. Allowable costs include costs of flagging or algorithms used for flagging of felony records and records of persons with convictions for crimes involving children, the elderly, and/or the disabled, as well as records of persons convicted of crimes involving domestic violence and/or stalking. Costs may include the cost of technical record flagging and the costs associated with identification of records to be flagged (see [12] below regarding interface with NIBRS).

(5) Participation in the NICS. NCHIP funds may be used to enable the State to participate in the NICS consistent with the provisions of 18 U.S.C. Section 922 (t). Allowable expenditures include, but are not limited to costs necessary to enable the State to serve as a Point of Contact under the FBI's NICS system, and include costs of equipment, software, personnel training, and development and implementation of related operating and administrative procedures. Funds may not be used to conduct presale firearm background checks.

(6) Firearm permits. NCHIP funds may be used to comply with Brady Act provisions pursuant to an ATF-approved firearm permit system and to develop and implement procedures to review the currency of firearm permits and/or to provide appropriate notification when permits are revoked.

(7) Protection order file. Establishment of a protection order file to enhance the cross-jurisdictional enforcement of protective orders, and to support the FBI's National Protection Order File is an important goal of the NCHIP program. Costs (including equipment, software, training and procedural development) associated with development and enhancement of such files and with interface with the FBI's National Protection Order File are covered. Protection order files supported with NCHIP funds must be compatible with the FBI file, and the application must indicate that records are presently being submitted to the FBI or indicate the date upon which that submission will commence. Funds are only allowable to support development of local protection order files where data in such files is or will become directly accessible throughout the State and available to the FBI's national system.

(8) Interface between criminal history records, sex offender registry, and civil protection order files. To ensure that, consistent with State law, a complete data review is possible in connection with background checks for child care or other authorized purposes, funds may be used to develop software to establish protocols to permit interface between the criminal history record system, the State sex offender registry, and related protection order files including files of civil protection orders.

(9) Uniform RAP sheet format. The FBI has recently endorsed a format and standards for transmission of a uniform RAP sheet (text version of a person's criminal history record) among States. The format reflects efforts initiated under the BJS/SEARCH Task Force on Uniform RAP Sheet Standards. Funds are available to assist States in converting State criminal history records to the FBI standard interstate RAP sheet format or for developing electronic interchange capabilities related thereto.

(10) Record automation. These are allowable costs only with respect to records where the subject has been arrested, indicted, convicted, or released from confinement within 5 years of the date of automation. As appropriate, allowable costs also include costs associated with system design in States with nonautomated systems or in States proposing to enhance system operation to include access to non-CCH databases.

(11) AFIS/livescan. Automated Fingerprint Identification System (AFIS)/livescan equipment for local law enforcement agencies is allowable to improve the level of arrest and disposition reporting, but only where—

(a) the State repository system is automated, is participating in, or is planning to participate in III, and has in place the technical capability to accept AFIS transmissions, and

(b) sufficient traffic can be demonstrated to justify the cost, possibly through the use of regional systems.

Funding of AFIS/livescan in squad cars is not allowable, since field inquiries are not a factor in checks under either the Brady Act or the Child Protection Act. Additionally, since data are not generally input to the system by the field unit, AFIS in the squad car would not support record improvement or completeness. AFIS/livescan for use in courts is allowable, to support record completeness. The same conditions regarding repository capability and levels of traffic are also applicable to costs in this category. Costs associated with AFIS/livescan communication from the repository to the FBI national system (IAFIS) are allowable but only where the State can demonstrate adequate levels of record completeness (both arrest and disposition) and current membership in III.

States should understand that Byrne 5% set-aside funds are available for AFIS/livescan, and that, accordingly, use of NCHIP funds for AFIS or livescan will only be allowable when justified as appropriate given the overall status of the State system, its participation in the national system and its planned use of Byrne 5% set-aside funds. This is particularly relevant with respect to State proposals to use NCHIP funds to cover costs of local livescan equipment.

(12) Interface with NIBRS. Funds may be used to interface with any State data system that is compatible with NIBRS for purposes of identifying persons convicted of crimes against children, the elderly, or the disabled; crimes involving domestic violence and/or stalking; and/or identification of records involving firearm crimes for operational or research purposes. NCHIP funds are not available, however, to develop the NIBRS database.

(13) Research, evaluation, monitoring, and audits. Costs associated with research or evaluation efforts are allowable to the extent that they are directly associated with a project approved in the application. Costs associated with monitoring State compliance with legislative or programmatic goals through ongoing or periodic audits or other procedures are allowable and encouraged. The purchase of equipment such as modems and the necessary communications and

data software for storing and transmitting evaluative data between States and to BJS or other designated Federal agencies is an allowable expense.

(14) Conversion of juvenile records to the adult system. Federal regulations allow the FBI to accept juvenile records if submitted by the State or local arresting agency. Expenditures to interface juvenile and adult records are allowable if consistent with relevant State law and undertaken to further the goals of the NCHIP program.

(15) Missing dispositions backlog reduction. These costs are allowable to improve the level of disposition reporting but only where limited to records with arrests within the past 5 years. States must also propose a strategy to prevent future backlogs from developing.

(16) Equipment upgrades. Upgrade costs are allowable where related to improving availability of data and where appropriate given the level of data completeness, participation in III, etc. Replacement costs will be considered, but States are encouraged to contribute some portion of the total costs.

(17) Training, participation in seminars and meetings. Limited funds may be used to cover costs of training and participation in State, regional, or national seminars or conferences (including travel, where necessary).

(18) Reducing cost of background checks. States may use funds to develop and implement technologies that lower costs of conducting background checks. These funds may also be used to pay all or part of the State's cost of conducting background checks on persons who are employed by or volunteer with a public, not-for-profit, or other voluntary organization to reduce the amount of fees charged for such background checks, consistent with the provisions of 42 USC 5119(b).

(19) Allowable activities relating to implementation of the Child Protection Act and the Domestic Violence and Stalker Reduction provisions of the VAWA. Allowable activities include—

* capturing domestic violence and/or stalking protection orders;
* flagging of records concerning child abuse, crimes against children, the elderly and the disabled; convictions for domestic violence and/or stalking; and domestic violence protection orders;
* incorporating serious misdemeanor offenses against children, the elderly and the disabled into existing criminal history records;
* offsetting the cost of certain background checks, including development and implementation of technological and procedural advances; and
* improving processes for entering data regarding stalking and domestic violence into local, State, and national crime information databases.

Text of ''Lautenberg Amendment.'' The ''Lautenberg Amendment'' amends the Federal Gun Control Act (18 U.S.C. Section 922) to prohibit the transfer of firearms to a person convicted of a ''misdemeanor crime of domestic violence.'' The text of the amendment is set forth below.

Sec. 668. GUN BAN FOR INDIVIDUALS CONVICTED OF A MISDEMEANOR CRIME OF DOMESTIC VIOLENCE

(a) Definition—Section 921 (a) of title 18, United States Code, is amended by adding at the end of the following:

''(33)(A) Except as provided in subparagraph (C), the term 'misdemeanor crime of domestic violence' means an offense that—

''(i) is a misdemeanor under Federal or State law; and

''(ii) has, as an element, the use or attempted use of physical force, or the threatened use of a deadly weapon, committed by a current or former spouse, parent, or guardian of the victim, by a person who is cohabiting with or has cohabited with the victim as a spouse, parent, or guardian, or by a person similarly situated to a spouse, parent, or guardian of the victim.

''(B)(i) A person shall not be considered to have been convicted of such an offense for purposes of this chapter, unless—

''(I) the person was represented by counsel in the case, or knowingly and intelligently waived the right to counsel in the case; and

(II) in the case of a prosecution for an offense described in this paragraph for which a person was entitled to a jury trial in the jurisdiction in which the case was tried, either

(aa) the case was tried by a jury, or

(bb) the person knowingly and intelligently waived the right to have the case tried by a jury, by guilty plea or otherwise.

''(ii) A person shall not be considered to have been convicted of such an offense for purposes of this chapter if the conviction has been expunged or set aside, or is an offense for which the person has been pardoned or has had civil rights restored (if the law of the applicable jurisdiction provides for the loss of civil rights under such an offense) unless the pardon, expungement, or restoration of civil rights expressly provides that the person may not ship, transport, possess, or receive firearms.''

(b) PROHIBITIONS—

(1) Section 922(d) of such title is amended

(A) by striking ''or'' at the end of paragraph (7);

(B) by striking the period at the end of paragraph (8) and inserting ''; or''; and

(C) by inserting after paragraph (8) the following:

(9) has been convicted in any court of a misdemeanor crime of domestic violence''.

(2) Section 922(g) of such title is amended—

(A) by striking ''or'' at the end of paragraph (7);

(B) by striking the period at the end of paragraph (8) and inserting ''; or''; and

(C) by inserting after paragraph (8) the following:

''(9) has been convicted in any court of a misdemeanor crime of domestic violence.''

(3) Section 922(s)(3)(B)(I) of such title is amended by inserting, ''and has not been convicted in any court of a misdemeanor crime of domestic violence'' before this semicolon.

(c) GOVERNMENT ENTITIES NOT EXCEPTED—Section 925(a)(1) of such title is amended by inserting ''sections 922(d)(9) and 922(g)(9) and'' after ''except for''.

Application and administrative requirements. Application content. All applicants must submit:

* Standard Form 424, Application for Federal Assistance.
* Budget Detail Worksheet (replaced the SF 424A, Budget Information).
* OJP Form 4000/3 (Rev. 1–93), Program Narrative and Assurances.
* OJP Form 4061/6 Certification Regarding Lobbying, Debarment, Suspension, and Other Responsibility Matters; Drug-Free Workplace Requirements.

Applicants are requested to submit an original and two copies of the application and certifications to the following address: Application Coordinator, Bureau of Justice Statistics, 810 Seventh Street, NW, Washington DC 20531, *Telephone:* (202) 616–3500.

Standard Form 424 (SF–424). The SF–424, a one-page sheet with 18 items, serves as a cover sheet for the entire application. This form is required for every application for Federal assistance. NO APPLICATION CAN BE ACCEPTED WITHOUT A COMPLETED, SIGNED ORIGINAL SF–424. Directions to complete each item are included on the back of the form.

Budget Detail Worksheet. Applications must provide a detailed justification for all costs, including the basis for computation of these costs. For example, the detailed budget would include the salaries of staff involved in the project and the portion of those salaries to be paid from the award; fringe benefits paid to each staff person; travel costs related to the project; equipment to be purchased with the award funds; and supplies required to complete the project.

Budget narrative. The budget narrative should detail costs included in each budget category for the Federal and the non-Federal (in-kind and cash) share. The purpose of the budget narrative is to relate items budgeted to project activities and to provide justification and explanation for budget items, including criteria and data used to arrive at the estimates for each budget category. The budget narrative should also indicate amounts to be made available to subrecipient agencies (under Contractual/Contracts category) other than the direct grant recipient. The following information is provided

to assist the applicant in developing the budget narrative:

a. Personnel category. List each position by title (and name of employee if available), show annual salary rate and percentage of time to be devoted to the project by the employee. Compensation paid for employees engaged in federally assisted activities must be consistent with that paid for similar work in other activities of the applicant.

b. Fringe benefits category. Indicate each type of benefit included and explain how the total cost allowable for employees assigned to the project is computed.

c. Travel category. Itemize travel expenses of project personnel by purpose (e.g., faculty to training site, field interviews, advisory group meetings, etc.) and show basis or computation (e.g., ''Five trips for x purpose at $80 average cost—$50 transportation and two days per diem at $15'' or ''Six people to 3-day meeting at $70 transportation and $45 subsistence.'') In training projects where travel and subsistence for trainees is included, this should be separately listed indicating the number of trainees and the unit costs involved.

(1) Identify the tentative location of all training sessions, meetings, and other travel.

(2) Travel costs are allowable as expenses by employees who are in travel status on official business. These costs must be in accordance with the Federal or an organizationally-approved travel policy.

(3) Recipients may follow their own established travel rates. If a recipient does not have an established travel policy, the recipient must abide by the Federal travel policy. Subrecipients of States must follow their State's established travel policy. If a State does not have an established travel policy, the subrecipient must abide by the Federal travel rates.

d. Equipment. List each type of equipment to be purchased or rented with unit or monthly costs.

e. Supplies. List items within this category by major type (office supplies, training materials, research forms, postage) and show basis for computation. Provide unit or monthly estimates.

f. Contractual category. State the selection basis for any contract, subcontract, prospective contract or prospective subcontract (including construction services and equipment). Please note, applications that include noncompetitive contracts for the provision of specific services must contain a sole source justification for any procurement in excess of $100,000.

For individuals to be reimbursed for personal services on a fee basis, list by name or type of consultant or service, the proposed fee (by day, week, or hour) and the amounts of time to be devoted to such services. For construction contracts and organization (including professional associations and education institutions performing professional services), indicate the type of service to be performed and the estimated contract cost data.

g. Construction category. Describe construction or renovation which will be accomplished using grant funds and the method used to calculate cost.

h. Other category. Include under ''other'' such items as rent, reproduction, telephone, and janitorial or security services. List items by major type with basis of computation shown. (Provide square footage and cost per square foot for rent. Provide local and long distance telephone charges separately.)

i. Indirect charges category. The Agency may accept an indirect cost rate previously approved for an applicant by a Federal agency. Applicants must enclose a copy of the approved rate agreement with the grant application.

j. Program income. If applicable, provide a detailed estimate of the amount of program income to be generated during the grant period and its proposed application (to reduce the cost of the project or to increase the scope of the project). Also, describe the source of program income, listing the rental rates to be obtained, sale prices of publications supported by grant funds, and registration fees charged for particular sessions. If scholarships (covering, for example, registration fees) are awarded by the organization to certain conference attendees, the application should identify the percentage of all attendees that are projected as ''scholarship'' cases and the precise criteria for their selection.

Program narrative. All applications must include a program narrative that fully describes the expected design and implementation of the proposed program. OJP Form 4000/3 (Rev. 1–93) provides additional detailed instructions for preparing the program narrative.

The narrative should include a time line of activities indicating, for each proposed activity, the projected duration of the activity, expected completion date, and any products expected. The application should include a description of the roles and responsibilities of key organizational and/or functional components involved in project activities; and a list of key personnel responsible for managing and implementing the major elements of the program.

Assurances. OJP Form 4000/3 (Rev. 1–93) must be included in the application submission. If submitting this form separately from the SF–424, the applicant must sign and date the form to certify compliance with the Federal statutes, regulations, and requirements as cited.

Certification Regarding Lobbying; Debarment, Suspension, and Other Responsibility Matters; and Drug-Free Workplace. Applicants should refer to the regulations cited in OJP Form, 4061/6 to determine the certification to which they are required to attest. A copy of OJP Form 4061/6 can be obtained from the BJS Application Coordinator. Applicants should also review the instructions for certification included in the regulations before completing this form. Signature of this form provides for compliance with certification requirements under 28 C.F.R. Part 69, ''New Restrictions on Lobbying,'' and 28 C.F.R. Part 67, ''Government-wide Debarment and Suspension (Nonprocurement) and Government-wide Requirements for Drug-Free Workplace (Grants).'' The certifications shall be treated as a material representation of fact upon which reliance will be placed when the U.S. Department of Justice determines to award the covered transaction, grant, or cooperative agreement.

Financial and administrative requirements. Discretionary grants are governed by the provisions of OMB Circulars applicable to financial assistance. The circulars, in addition to the OJP Financial Guide, are available from the Office of Justice Programs. This guideline manual is intended to assist grantees in the administration of funds and includes information on allowable costs, methods of payment, Federal rights of access to records, audit requirements, accounting systems, and financial records.

Complete and accurate information is required relative to the application, expenditure of funds, and program performance. The consequences of failure to comply with program guidelines and requirements will be determined at the discretion of the Department.

Civil rights obligations. All applicants for Federal financial assistance must sign Certified Assurances that they are in compliance with the Federal laws and regulations which prohibit discrimination in any program or activity that receives such Federal funds. Section 809(c), Omnibus Crime

Control & Safe Streets Act of 1968, provides that:

No person in any State shall on the ground of race, color, religion, national origin, or sex be excluded from participation in, be denied the benefits of, or be subjected to discrimination under, or denied employment in connection with any program or activity funded in whole or in part with funds made available under this title.

Section 504 of the Rehabilitation Act of 1973, and Title II of the Americans With Disabilities Act prohibit discrimination on the basis of disability.

The applicant agency must discuss how it will ensure nondiscriminatory practices as they relate to:

(1) Delivery of services or benefits—to ensure that individuals will not be denied access to services or benefits under the program or activity on the basis of race, color, religion, national origin, gender, age, or disability;

(2) Employment practices—to ensure that its personnel in the program or activity are selected for employment without regard to race, color, religion, national origin, gender, age, or disability; and

(3) Program participation—to ensure members of any planning, steering or advisory board, which is an integral part of the program or activity, are not excluded from participation on the basis of race, color, religion, national origin, gender, age or disability; and to encourage the selection of such members who are reflective of the diversity in the community to be served.

Audit requirement. On June 30, 1997, the Office of Management and Budget issued Circular A–133, ''Audits of States, Local Governments, and Non-Profit Organizations,'' which establishes regulations to implement the Single Audit Act of 1996. This Circular A–133 outlines the requirements for organizational audits which apply to BJS grantees.

Intergovernmental review of Federal programs. Federal Executive Order 12372, ''Intergovernmental Review of Federal Programs,'' allows States to establish a process for reviewing Federal programs in the State, to choose which programs they wish to review, to conduct such reviews, and to make their views known to the funding Federal agency through a State ''single point of contact.''

If the State has established a ''single point of contact,'' and if the State has selected this program to be included in its review process, the applicant must send a copy of its letter or application to the State ''single point of contact'' at the same time that it is submitted to BJS. The letter or application submitted to BJS must indicate that this has been done. The State must complete its review within 60 days. The review period will begin on the date that the letter or application is officially received by BJS. If BJS does not receive comments from the State's ''single point of contact'' by the end of the review period, this will be interpreted as a ''no comment'' response.

If the State has not established a ''single point of contact,'' or if it has not selected the BJS statistics development or criminal history improvement programs in its review process, this must be stated in the letter or application.

Jan M. Chaiken,

Director, Bureau of Justice Statistics.

[FR Doc. 98–13965 Filed 5–26–98; 8:45 am]

BILLING CODE 4410–18–P

DEPARTMENT OF LABOR

Office of the Secretary

Submission for OMB review; comment request

May 21, 1998.

The Department of Labor (DOL) has submitted the following public information collection requests (ICRs) to the Office of Management and Budget (OMB) for review and approval in accordance with the Paperwork Reduction Act of 1995 (Pub. L. 104–13, 44 U.S.C. Chapter 35). A copy of each individual ICR, with applicable supporting documentation, may be obtained by calling the Department of Labor, Departmental Clearance Officer, Todd R. Owen ((202) 219–5096 ext. 143) or by E-Mail to Owen-Todd@dol.gov. Individuals who use a telecommunications device for the deaf (TTY/TDD) may call (202) 219–4720 between 1:00 p.m. and 4:00 p.m. Eastern time, Monday-Friday.

Comments should be sent to Office of Information and Regulatory Affairs, *Attn:* OMB Desk Officer for BLS, DM, ESA, ETA, MSHA, OSHA, PWBA, or VETS, Office of Management and Budget, Room 10235, Washington, DC 20503 ((202) 395–7316), by June 26, 1998.

The OMB is particularly interested in comments which:

* Evaluate whether the proposed collection of information is necessary for the proper performance of the functions of the agency, including whether the information will have practical utility;

* Evaluate the accuracy of the agency's estimate of the burden of the proposed collection of information, including the validity of the methodology and assumptions used;

* Enhance the quality, utility, and clarity of the information to be collected; and

* Minimize the burden of the collection of information on those who are to respond, including through the use of appropriate automated, electronic, mechanical, or other technological collection techniques or other forms of information technology, e.g., permitting electronic submission of responses.

Agency: Occupational Safety and Health Administration.

Title: Gear Certification (29 CFR part 1919).

OMB Number: 1218–0003 (Extension).

Form Number: OSHA 70, OSHA 71, and OSHA 72.

Frequency: Quadrennially; Annually.

Affected Public: Business or other for-profit; Not-for-profit institutions; State, Local and Tribal Government.

Number of Respondents: 278.

Total Responses: 6443.

Estimated Time per Respondent: 55 minutes.

Total Burden Hours: 93.

Total annualized capital/startup costs: $0.

Total annual costs (operating/maintaining systems or purchasing services): $476,406.

Description: 29 CFR part 1919 (Gear Certification), requires the gathering of information to complete three forms, the OSHA 70, OSHA 71, and OSHA 72. The OSHA 70 Form is used by applicants seeking accreditation from OSHA to be able to test or examine certain equipment and material handling devices, as required under the maritime regulations, part 1917 (Marine Terminals), and part 1918 (Long shoring). The OSHA 70 Form application for accreditation provides an easy means for companies to apply for accreditation. The OSHA 71 Form is required to be issued by those accredited by OSHA to make known to employers in the maritime industry that certain equipment and material handling devices are safe to use or operate.

The OSHA 72 Form is required to be used by those accredited by OSHA to employers in maritime industry when the equipment or material handling device is found to be unsafe to use.

Agency: Occupational Safety and Health Administration.

Title: Course Evaluation Form.

OMB Number: 1218–0173 (Extension).

Frequency: Once (at the end of the training course).

Affected Public: Individuals.

Number of Respondents: 11,500.
Total Responses: 11,500.
Estimated Time per Respondent: 10 minutes.
Total annualized capital/startup costs: $0.
Total annual costs (operating/maintaining systems or purchasing services): $0.
Description: Information collected on the Course Evaluation Form from the students completing OSHA Training Institute and Education Center training courses is used to evaluate course usefulness, effectiveness, quality, and content and to make course improvements.

Agency: Occupational Safety and Health Administration.
Title: Voluntary Protection Program (VPP).
OMB Number: 1218–0NEW.
Frequency: On occasion.
Affected Public: Applicants to the Voluntary Protection Program.
Number of Respondents: 90 to 100 a year.
Estimated Time per Respondent: 200 hours.
Total Burden Hours: 18,000.
Total annualized capital/startup costs: $0.
Total annual costs (operating/maintaining systems or purchasing services): $0.
Description: The information collection is necessary to determine if the applicant has a safety and health program that should qualify for participation in one of OSHA's Voluntary Protection Programs.

Todd R. Owen,
Departmental Clearance Officer.
[FR Doc. 98–13975 Filed 5–26–98; 8:45 am]
BILLING CODE 4510–26–M

DEPARTMENT OF LABOR

Mine Safety and Health Administration

Petitions for Modification

The following parties have filed petitions to modify the application of mandatory safety standards under section 101(c) of the Federal Mine Safety and Health Act of 1977.

1. Lodestar Energy

[Docket No. M–98–28–C]

Lodestar Energy, Inc., P.O. Box 448, Clay, Kentucky 42404 has filed a petition to modify the application of 30 CFR 75.503 (permissible electric face equipment; maintenance) to its Baker Mine (I.D. No. 15–14492) located in Webster County, Kentucky. The petitioner proposes to use 750 feet of No. 6 cable on Fletcher single boom roof bolters. The petitioner states that the proposed alternative method will not result in diminution of safety to the miners. In addition, the petitioner asserts that the proposed alternative method would provide at least the same measure of protection as would the mandatory standard.

2. Joliett Coal Company

[Docket No. M–98–29–C]

Joliett Coal Company, 837 East Grand Avenue, Tower City, Pennsylvania 17980 has filed a petition to modify the application of 30 CFR 75.1400 (hoisting equipment; general) to its No. 3 Vein Slope (I.D. No. 36–08702) located in Schuylkill County, Pennsylvania. The petitioner proposes to use a slope conveyance (gunboat) in transporting persons without installing safety catches or other no less effective devices but instead using an increased rope strength/safety factor and secondary safety rope connection in place of such devices. The petitioner asserts that the proposed alternative method would provide at least the same measure of protection as would the mandatory standard.

3. Lone Mountain Processing, Inc.

[Docket No. M–98–30–C]

Lone Mountain Processing, Inc., P.O. Box 40, Pennington Gap, Virginia 24277 has filed a petition to modify the application of 30 CFR 75.1103–4 (automatic fire sensor and warning device systems; installation; minimum requirements) to its Darby Fork Mine No. 1 (I.D. No. 15–02263), and its Huff Creek Mine No. 1 (I.D. No. 15–17234) both located in Harlan County, Kentucky. The petitioner proposes to use belt air to ventilate active working places. The petitioner proposes to install a low-level carbon monoxide detection system in belt entries as an early warning fire detection system. The petitioner asserts that the proposed alternative method would provide at least the same measure of protection as would the mandatory standard.

4. Freeman United Coal Mining Co.

[Docket No. M–98–31–C]

Freeman United Coal Mining Company, 1999 Wabash Avenue, Suite 200B, Springfield, Illinois 62704–5364 has filed a petition to modify the application of 30 CFR 75.1002 (location of trolley wires, trolley feeder wires, high-voltage cables and transformers) to its Crown II Mine (I.D. No. 11–02236) located in Macoupin County, Illinois. The petitioner proposes to use 2,400 volt A.C. cables and equipment inby the last open crosscut within 150 feet of gob areas so that they can be used to power continuous mining equipment. The petitioner asserts that the proposed alternative method would provide at least the same measure of protection as would the mandatory standard.

5. Mettiki Coal Corporation

[Docket No. M–98–32–C]

Mettiki Coal Corporation, 293 Table Rock Road, Oakland, Maryland 21550 has filed a petition to modify the application of 30 CFR 75.1002 (location of trolley wires, trolley feeder wires, high-voltage cables and transformers) to its Mettiki Mine (I.D. No. 18–00621) located in Garrett County, Maryland. The petitioner proposes to use 4,300 volt cables on high-voltage longwall electric equipment used within 150 feet from pillar workings (longwall gob). The petitioner asserts that the proposed alternative method would provide at least the same measure of protection as would the mandatory standard.

6. Sea "B" Mining Company

[Docket No. M–98–33–C]

Sea "B" Mining Company, P.O. Box 7, Dante, Virginia 24237 has filed a petition to modify the application of 30 CFR 1710–1(a) (canopies or cabs; self-propelled diesel-powered and electric face equipment; installation requirements) to its Silver Creek Mine (I.D. No. 44–16895) located in Tazewell County, Virginia. The petitioner proposes to operate self-propelled electric face equipment without canopies because of the mining heights less than 46 inches at the Silver Creek Mine. The petitioner asserts that application of the standard would result in a diminution of safety to the miners.

7. Mettiki Coal Corporation

[Docket No. M–98–34–C]

Mettiki Coal Corporation, 293 Table Rock Road, Oakland, Maryland has filed a petition to modify the application of 30 CFR 75.1726(a) (performing work from a raised position; safeguards) to its Mettiki Mine (I.D. No. 18–00621) located in Garrett County, Maryland. The petitioner proposes to use a specially modified scoop as an elevated mobile work platform. The petitioner asserts that application of the standard would result in a diminution of safety to the miners. In addition, the petitioner asserts that the proposed alternative method would provide at least the same measure of protection as would the mandatory standard.

8. Lone Mountain Processing, Inc.

[Docket No. M–98–35–C]

Lone Mountain Processing, Inc., P.O. Box 40, Pennington Gap, Virginia 24277 has filed a petition to modify the application of 30 CFR 75.350 (air courses and belt haulage entries) to its Huff Creek No. 1 Mine (I.D. No. 15–17234), and its Darby Fork Mine No. 1 (I.D. No. 15–02263) both located in Harlan County, Kentucky. The petitioner proposes to use belt air to ventilate working sections. The petitioner proposes to install a low-level carbon monoxide detection system as an early warning fire detection system in belt entries. The petitioner asserts that the proposed alternative method would provide at least the same measure of protection as would the mandatory standard.

9. Performance Coal Company

[Docket No. M–98–36–C]

Performance Coal Company, P.O. Box 69, Naoma, West Virginia 25140 has filed a petition to modify the application of 30 CFR 75.350 (air courses and belt haulage entries) to its Upper Big Branch Mine-South (I.D. No. 46–08436) located in Raleigh County, West Virginia. The petitioner proposes to use an alternative method of ventilation that would not separate the belt haulage entry from the intake air course, nor limit the velocity of the air coursed through the belt haulage entry, nor prohibit the use of such air for ventilation of active working places. The petitioner proposes to install a low-level carbon monoxide detection system in all belt entries used as intake air courses. The petitioner asserts that the proposed alternative method would provide at least the same measure of protection as would the mandatory standard.

10. CONSOL of Kentucky, Inc.

[Docket No. M–98–37–C]

CONSOL of Kentucky, Inc., Consol Plaza, 1800 Washington Road, Pittsburgh, Pennsylvania 15241–1421 has filed a petition to modify the application of 30 CFR 75.1101–8 (water sprinkler systems; arrangement of sprinklers) to its Motts Branch Mine (I.D. No. 15–18012) located in Knott County, Kentucky. The petitioner proposes to use a single line of automatic sprinklers for its fire protection system on the main and secondary belt conveyors at the Motts Branch Mine. The petitioner asserts that the proposed alternative method would provide at least the same measure of protection as would the mandatory standard.

Request for Comments

Persons interested in these petitions are encouraged to submit comments via e-mail to ''comments@msha.gov'', or on a computer disk along with an original hard copy to the Office of Standards, Regulations, and Variances, Mine Safety and Health Administration, 4015 Wilson Boulevard, Room 627, Arlington, Virginia 22203. All comments must be postmarked or received in that office on or before June 26, 1998. Copies of these petitions are available for inspection at that address.

Dated: May 18, 1998.

Patricia W. Silvey,

Director, Office of Standards, Regulations, and Variances.

[FR Doc. 98–14003 Filed 5–26–98; 8:45 am]

BILLING CODE 4510–43–P

DEPARTMENT OF LABOR

Occupational Safety and Health Administration

Notice of Meeting

AGENCY: Occupational Safety and Health Administration (OSHA), Labor.

ACTION: Notice of a technical workshop; controlling environmental tobacco smoke exposure in the hospitality industry.

SUMMARY: The Occupational Safety and Health Administration (OSHA) is sponsoring a technical panel to discuss ventilation engineering controls for environmental tobacco smoke (ETS) in the hospitality sector. This meeting, which is in the form of a workshop, will be moderated by the American Conference of Governmental Industrial Hygienists (ACGIH). The workshop proceedings on recommended and feasible ventilation engineering controls for the reduction of occupational ETS exposures in the hospitality industry will be published by ACGIH for the public.

DATES: The workshop will be held on June 7, 8, and 9, 1998, beginning at 8:30 a.m. each day and ending at approximately 5:00 p.m.

ADDRESSES: The workshop will be held at the Drawbridge Inn, I–75 at Buttermilk Pike, Fort Mitchell, Kentucky 41017 (Phone 606–341–2800). The conference contact is Alexis Callender, American Conference of Governmental Industrial Hygienists, 1330 Kemper Meadow Dr., Suite 600, Cincinnati, Ohio 45240; Phone: 513–742–2020.

FOR FURTHER INFORMATION CONTACT: The conference contact is Alexis Callender, American Conference of Governmental Industrial Hygienists, 1330 Kemper Meadow Dr., Suite 600, Cincinnati, Ohio 45240; Phone: 513–742–2020.

SUPPLEMENTARY INFORMATION:

Background

On April 5, 1994, OSHA published a Notice of Proposed Rulemaking on Indoor Air Quality (59 FR 15968). The proposal included a comprehensive standard that would mandate the proper operation and maintenance of building systems, require control of point sources of pollutants, and require control of exposures from air pollutants generated by renovation and remodeling activities. The proposal also indicated the conditions under which smoking could be allowed in the workplace. For example, if smoking were allowed in a workplace, the employer would be required to establish designated smoking areas and permit smoking only in such areas. The areas would have to be enclosed and exhausted directly to the outside and maintained under negative pressure sufficient to contain tobacco smoke. In addition, employees could not be required to enter the designated smoking areas as part of their normal work activities [59 FR at 16037].

The ETS provisions of the proposal received a substantial number of comments. Information submitted to OSHA during the comment period and public hearing indicated that the ETS provisions were feasible for many employers. However, it became apparent to OSHA that in businesses where there is substantial contact between customers who smoke and workers (e.g., food, beverage and gaming industries), this provision was not easily applied as written. During the hearing, OSHA asked representatives of the hospitality industry for information on engineering and administrative controls that could be used to protect workers. Little information on feasible engineering and work practice controls for this industry was submitted to the Agency in response to these requests.

OSHA needs more information on this issue and is therefore sponsoring a workshop on ventilation engineering controls for reducing ETS exposure in the hospitality industry, which will be run under the auspices of the ACGIH. The ACGIH will assemble a panel of experts to identify issues and obtain information to help OSHA resolve feasibility issues raised by the application of the proposal to the hospitality industry. It is the intent of OSHA that the workshop results will be published for the use of professionals who have responsibility for reducing

occupational exposures to ETS in these sectors.

Public Attendance

Interested persons are invited to attend the ventilation workshop. The ACGIH has indicated that 50 seats will be available for observers. Because of the limited amount of seating available, space will be assigned on a first come, first served basis. However, if there are more requests to attend than space available, the ACGIH will give preference to technical experts. No organization will be permitted more than one observer unless there is space available after all admissions requests are filled. All individuals who wish to attend must contact Alexis Callender, American Conference of Governmental Industrial Hygienists, no later than May 28, 1998 to register for this workshop. Admittance to the workshop will be limited to those duly registered.

Individuals with disabilities wishing to attend should contact Alexis Callender, no later than May 28, 1998 to obtain appropriate accommodations.

The Workshop

The panel will consist of ventilation engineers experienced in various aspects of ventilation engineering controls currently used in general industry, and facility management representatives from the restaurant, bar, and gambling establishments. The panel discussions will be chaired by a member of the ACGIH's Committee on Industrial Ventilation. Panel participants were chosen for their technical expertise and experience in this area. This workshop is technical in nature. The public is invited to observe the proceedings, but participation in the discussion is limited to panel members.

Workshop Agenda

On the first day, each panelist will deliver a 15 minute presentation. These presentations will cover various topics, including historical perspectives of ACGIH's Industrial Ventilation Guide; local source capture vs. general dilution ventilation; make up air (e.g., supply air islands); ventilation performance monitoring; displacement ventilation systems; particulate and gas phase removal; and current practice for design, operations, and maintenance of Heating Ventilation, and Air-Conditioning (HVAC) systems in gaming, restaurant, and beverage (bars) facilities. On the second day of the workshop, working groups will be formed from the panel to explore the technological and economic feasibility of applying current prudent practice for the application of ventilation engineering controls to the hospitality sector. The third day will involve the summarization of the work completed by the working groups and discussion of how ACGIH plans to incorporate the information into a ventilation guide for the hospitality industry.

Authority and Signature

This document was prepared under the direction of Charles N. Jeffress, Assistant Secretary of Labor for Occupational Safety and Health, U.S. Department of Labor, 200 Constitution Avenue, NW, Washington, DC, 20210. It is issued pursuant to section 6(b) of the Occupational Safety and Health Act of 1970 (84 Stat. 1594, 29 U.S.C. 655).

Signed at Washington, D.C. this 19th day of May 1998.

Charles N. Jeffress,

Assistant Secretary of Labor.

[FR Doc. 98–13970 Filed 5–26–98; 8:45 am]

BILLING CODE 4510–26–P

NATIONAL ARCHIVES AND RECORDS ADMINISTRATION

Agency Information Collection Activities: Proposed Collection; Comment Request

AGENCY: National Archives and Records Administration (NARA).

ACTION: Notice.

SUMMARY: NARA is giving public notice that the agency proposes to request extension of currently approved information collections used by researchers for submitting requests for copies of pages of Ship Passenger Arrival Records, Federal population census schedules through the 1920 census, and Eastern Cherokee Applications of the U.S. Court of Claims, 1906–1909, that are in the National Archives of the United States. The public is invited to comment on the proposed information collections pursuant to the Paperwork Reduction Act of 1995.

DATES: Written comments must be received on or before July 27, 1998 to be assured of consideration.

ADDRESSES: Comments should be sent to: Paperwork Reduction Act Comments (NHP), Room 3200, National Archives and Records Administration, 8601 Adelphi Rd, College Park, MD 20740–6001; or faxed to 301–713–6913; or electronically mailed to tamee.fechhelm@arch2.nara.gov.

FOR FURTHER INFORMATION CONTACT: Requests for additional information or copies of the proposed information collections and supporting statements should be directed to Tamee Fechhelm at telephone number 301–713–6730, ext. 226, or fax number 301–713–6913.

SUPPLEMENTARY INFORMATION: Pursuant to the Paperwork Reduction Act of 1995 (Public Law 104–13), NARA invites the general public and other Federal agencies to comment on proposed information collections. The comments and suggestions should address one or more of the following points: (a) whether the proposed information collections are necessary for the proper performance of the functions of NARA; (b) the accuracy of NARA's estimate of the burden of the proposed information collections; (c) ways to enhance the quality, utility, and clarity of the information to be collected; and (d) ways to minimize the burden of the collection of information on respondents, including the use of information technology. The comments that are submitted will be summarized and included in the NARA request for Office of Management and Budget (OMB) approval. All comments will become a matter of public record. In this notice, NARA is soliciting comments concerning the following information collections:

Title: National Archives Order for Copies of Ship Passenger Arrival Records, National Archives Order for Copies of Census Records, and National Archives Order for Copies of Eastern Cherokee Applications.

OMB number: 3095–0027.

Agency form numbers: NATF Forms 81, 82, and 83.

Type of review: Regular.

Affected public: Individuals who wish to order copies of Ship Passenger Arrival Records, Federal population census schedules through the 1920 census, and Eastern Cherokee Applications of the U.S. Court of Claims, 1906–1909, in the National Archives of the United States.

Estimated number of respondents: 12,000.

Estimated time per response: 10 minutes.

Frequency of response: On occasion (when respondent wishes to search for or order copies of Ship Passenger Arrival Records, Federal population census schedules through the 1920 census, and Eastern Cherokee Applications from the U.S. Court of Claims, 1906–1909).

Estimated total annual burden hours: 2,000.

Abstract: The NATF form 81 will be used by researchers to request that NARA search for and make copies of pages from passenger arrival lists in the custody of the National Archives. The

NATF form 82 will be used by researchers to request that NARA search for and make copies of pages of Federal population census schedules through the 1920 census. The NATF form 83 will be used by researchers to request that NARA search for and make copies of Eastern Cherokee applications of the U.S. Court of Claims, 1906–1909. Submission of requests on a form is necessary to handle in a timely fashion the volume of requests received for these records (approximately 10,000 per year for the NATF 81, approximately 1,400 per year for the NATF 82, and approximately 600 per year for the NATF 83) and the need to obtain specific information from the researcher to search for the records sought. The form will be printed on carbonless paper as a multi-part form to allow the researcher to retain a copy of his request and NARA to respond to the researcher on the results of the search or to bill for copies if the researcher wishes to order the copies. As a convenience, the form will allow researchers to provide credit card information to authorize billing and expedited mailing of the copies. NARA is not able at present to accept electronic submission of requests; however, we intend to address security of financial information and other issues as we continue our efforts to increase electronic access to NARA and its holdings.

Dated: May 21, 1998.

L. Reynolds Cahoon,

Assistant Archivist for Human Resources and Information Services.

[FR Doc. 98–14000 Filed 5–26–98; 8:45 am]

BILLING CODE 7515–01–P

NATIONAL CREDIT UNION ADMINISTRATION

Sunshine Act Meeting; Notice of Meetings

TIME AND DATE: 10:00 a.m., Thursday, May 28, 1998.

PLACE: Board Room, 7th Floor, Room 7047, 1775 Duke Street, Alexandria, VA 22314–3428.

STATUS: Open.

MATTERS TO BE CONSIDERED:

1. Requests from Two (2) Federal Credit Unions to Convert to Community Charters.
2. Request for a Corporate Federal Credit Union for a Field of Membership Amendment.

RECESS: 11:00 a.m.

TIME AND DATE: 11:30 a.m., Thursday, May 28, 1998.

PLACE: Board Room, 7th Floor, Room 7047, 1775 Duke Street, Alexandria, VA 22314–3428.

STATUS: Closed.

MATTERS TO BE CONSIDERED:

1. Administrative Action under Part 704 of NCUA's Rules and Regulations. Closed pursuant to exemption (8).
2. Corporate Credit Union Risk Rating system (CCURRS). Closed pursuant to exemption (8).
3. Administrative Action under Section 206 of the Federal Credit Union Act. Closed pursuant to exemptions (4), (5), (6), (7) and (8).
4. Six (6) Personnel Actions. Closed pursuant to exemptions (2) and (6).
5. Human Resources Delegations of Authority. Closed pursuant to exemptions (2) and (6).

FOR FURTHER INFORMATION CONTACT: Becky Baker, Secretary of the Board, Telephone (703) 518–6304.

Becky Baker,

Secretary of the Board.

[FR Doc. 98–14077 Filed 5–22–98; 9:31 am]

BILLING CODE 7535–01–M

NUCLEAR REGULATORY COMMISSION

[Docket No. 50–220]

Niagara Mohawk Power Corporation; Notice of Consideration of Issuance of Amendment to Facility Operating License, Proposed No Significant Hazards Consideration Determination, and Opportunity for a Hearing; Correction

AGENCY: Nuclear Regulatory Commission.

ACTION: Notice; correction.

SUMMARY: This document corrects a notice appearing in the **Federal Register** on May 19, 1998 (63 FR 27601), that would change Technical Specifications 3/4.6.2, ''Protective Instrumentation,'' to reflect modifications to the initiation instrumentation for the Control Room Air Treatment System. This action is necessary to correct an erroneous date.

FOR FURTHER INFORMATION CONTACT: David L. Meyer, Chief, Rules and Directives Branch, Division of Administrative Services, Office of Administration, telephone (301) 415–7162.

SUPPLEMENTARY INFORMATION: On page 27604, in the first column, in the third complete paragraph, on the first line, the date ''June 1, 1998,'' should be corrected to read ''June 18, 1998.''

Dated at Rockville, Maryland, this 20th day of May 1998.

For the Nuclear Regulatory Commission.

David L. Meyer,

Chief, Rules and Directives Branch, Division of Administrative Services, Office of Administration.

[FR Doc. 98–13972 Filed 5–26–98; 8:45 am]

BILLING CODE 7590–01–P

NUCLEAR REGULATORY COMMISSION

[Docket Nos. 50–277 and 50–278]

PECO Energy Company, Peach Bottom Atomic Power Station (Units 2 & 3); Confirmatory Order Modifying Licenses; Effective Immediately

I

PECO Energy Company, (PECO or the Licensee) is the holder of Facility Operating Licenses Nos. DPR–44 and DPR–56, which authorize operation of Peach Bottom Atomic Power Station, Units 2 and 3, located in York County, Pennsylvania.

II

The staff of the U.S. Nuclear Regulatory Commission (NRC) has been concerned that Thermo-Lag 330–1 fire barrier systems installed by licensees may not provide the level of fire endurance intended and that licensees that use Thermo-Lag 330–1 fire barriers may not be meeting regulatory requirements. During the 1992 to 1994 time frame, the NRC staff issued Generic Letter (GL) 92–08, ''Thermo-Lag 330–1 Fire Barriers'' and subsequent requests for additional information that requested licensees to submit plans and schedules for resolving the Thermo-Lag issue. The NRC staff has obtained and reviewed all licensees' corrective plans and implementation schedules. The staff is concerned that some licensees may not be making adequate progress toward resolving the plant-specific issues, and that some implementation schedules may be either too tenuous or too protracted. For example, several licensees informed the NRC staff that their completion dates had slipped by 6 months to as much as 3 years. For plants that have completion action scheduled beyond 1997, the NRC staff has met with the licensees to discuss the progress of the licensees' corrective actions and the extent of licensee management attention regarding completion of Thermo-Lag corrective actions.

PECO Energy Company was one of the licensees with which the NRC staff held meetings. At these meetings, the NRC staff reviewed with PECO Energy Company the schedule of Thermo-Lag

corrective actions described in the PECO Energy Company's submittals to the NRC dated April 16 and December 29, 1993; February 4 and December 19, 1994; March 29 and August 2, 1995; May 2, 1996; March 24, 1997; and January 14, 1998. Based on the information submitted by PECO Energy Company, the NRC staff has concluded that the schedules presented by PECO Energy Company are reasonable. This conclusion is based on the (1) amount of installed Thermo-Lag, (2) the complexity of the plant-specific fire barrier configurations and issues, and (3) the need to perform certain plant modifications during outages as opposed to those that can be performed while the plant is at power. In order to remove compensatory measures such as fire watches, it has been determined that resolution of the Thermo-Lag corrective actions by PECO Energy Company must be completed in accordance with current PECO Energy Company's schedules. By letter dated April 16, 1998, the NRC staff notified PECO Energy Company of its plan to incorporate PECO Energy Company's schedule commitment into a requirement by issuance of an Order and requested consent from the Licensee. By letter dated April 27, 1998, the Licensee provided its consent to issuance of a Confirmatory Order.

III

The Licensee's commitment as set forth in its letter of April 27, 1998, is acceptable and is necessary for the NRC to conclude that public health and safety are reasonably assured. To preclude any schedule slippage and to assure public health and safety, the NRC staff has determined that the Licensee's commitment in its April 27, 1998, letter be confirmed by this Order. The Licensee has agreed to this action. Based on the above, and the Licensee's consent, this Order is immediately effective upon issuance.

IV

Accordingly, pursuant to sections 103, 161b, 161i, 161o, 182, and 186 of the Atomic Energy Act of 1954, as amended, and the Commission's regulations in 10 CFR 2.202 and 10 CFR Part 50, IT IS HEREBY ORDERED, effective immediately, that:

PECO Energy Company shall complete final implementation of Thermo-Lag 330–1 fire barrier corrective actions at Peach Bottom Atomic Power Station, Units 2 and 3, described in the PECO Energy Company's submittals to the NRC dated April 16 and December 29, 1993; February 4 and December 19, 1994; March 29 and August 2, 1995; May 2, 1996; March 24, 1997; and January 14, 1998, prior to restart from 3R12 refueling outage of Peach Bottom Atomic Power Station, Unit 3, scheduled for October 1999.

The Director, Office of Nuclear Reactor Regulation, may relax or rescind, in writing, any provisions of this Confirmatory Order upon a showing by the Licensee of good cause.

V

Any person adversely affected by this Confirmatory Order, other than the Licensee, may request a hearing within 20 days of its issuance. Where good cause is shown, consideration will be given to extending the time to request a hearing. A request for extension of time must be made in writing to the Director, Office of Nuclear Reactor Regulation, U.S. Nuclear Regulatory Commission, Washington, D.C. 20555, and include a statement of good cause for the extension. Any request for a hearing shall be submitted to the Secretary, U.S. Nuclear Regulatory Commission, Attention: Chief, Rulemaking and Adjudications Staff, Washington, D.C. 20555. Copies of the hearing request shall also be sent to the Director, Office of Nuclear Reactor Regulation, U. S. Nuclear Regulatory Commission, Washington, DC 20555, to the Deputy Assistant General Counsel for Enforcement at the same address, to the Regional Administrator, NRC Region I, 475 Allendale Road, King of Prussia, Pennsylvania 19406–1415 and to the Licensee. If such a person requests a hearing, that person shall set forth with particularity the manner in which his/her interest is adversely affected by this Order and shall address criteria set forth in 10 CFR 2.714(d).

If a hearing is requested by a person whose interest is adversely affected, the Commission will issue an Order designating the time and place of any such hearing. If a hearing is held, the issue to be considered at such hearing shall be whether this Confirmatory Order should be sustained.

In the absence of any request for hearing, or written approval of an extension of time in which to request a hearing, the provisions specified in Section IV above shall be final 20 days from the date of this Order without further order or proceedings. If an extension of time for requesting a hearing has been approved, the provisions specified in Section IV shall be final when the extension expires if a hearing request has not been received. An answer or a request for hearing shall not stay the immediate effectiveness of this Order.

Dated at Rockville, Maryland this 19th day of May 1998.

For the Nuclear Regulatory Commission.

Samuel J. Collins,

Director, Office of Nuclear Reactor Regulation.

[FR Doc. 98–13973 Filed 5–26–98; 8:45 am]

BILLING CODE 7590–01–P

NUCLEAR REGULATORY COMMISSION

[Docket Nos. 50–352 and 50–353]

Philadelphia Electric Company, Limerick Generating Station, (Units 1 and 2); Confirmatory Order Modifying Licenses; Effective Immediately

I

Philadelphia Electric Company (the Licensee) is the holder of Facility Operating Licenses Nos. NPF–39 and NPF–85, which authorize operation of Limerick Generating Station (LGS), Units 1 and 2, located in Montgomery and Chester Counties, Pennsylvania.

II

The staff of the U.S. Nuclear Regulatory Commission (NRC) has been concerned that Thermo-Lag 330–1 fire barrier systems installed by licensees may not provide the level of fire endurance intended and that licensees that use Thermo-Lag 330–1 fire barriers may not be meeting regulatory requirements. During the 1992 to 1994 timeframe, the NRC staff issued Generic Letter (GL) 92–08, ''Thermo-Lag 330–1 Fire Barriers'' and subsequent requests for additional information that requested licensees to submit plans and schedules for resolving the Thermo-Lag issue. The NRC staff has obtained and reviewed all licensees' corrective plans and schedules. The staff is concerned that some licensees may not be making adequate progress toward resolving the plant-specific issues, and that some implementation schedules may be either too tenuous or too protracted. For example, several licensees informed the NRC staff that their completion dates had slipped by 6 months to as much as 3 years. For plants that have completion action scheduled beyond 1997, the NRC staff has met with these licensees to discuss the progress of the licensees' corrective actions and the extent of licensee management attention regarding completion of Thermo-Lag corrective actions. In addition, the NRC staff discussed with licensees the possibility of accelerating their completion schedules.

Philadelphia Electric Company was one of the licensees with which the NRC staff held meetings. At these meetings, the NRC staff reviewed with

Philadelphia Electric Company the schedule of Thermo-Lag corrective actions described in the Philadelphia Electric Company submittals to the NRC dated April 16 and December 29, 1993, February 4 and December 19, 1994, March 29 and August 2, 1995, May 2, 1996, and March 24, 1997. Based on the information submitted by Philadelphia Electric Company and provided during the meetings, the NRC staff has concluded that the schedules presented by Philadelphia Electric Company are reasonable. This conclusion is based on the (1) amount of installed Thermo-Lag, (2) the complexity of the plant-specific fire barrier configurations and issues, (3) the need to perform certain plant modifications during outages as opposed to those that can be performed while the plant is at power, and (4) integration with other significant, but unrelated issues that Philadelphia Electric Company is addressing at its plant. In order to remove compensatory measures such as fire watches, it has been determined that resolution of the Thermo-Lag corrective actions by Philadelphia Electric Company must be completed in accordance with current Philadelphia Electric Company schedules. By letter dated April 16, 1998, the NRC staff notified Philadelphia Electric Company of its plan to incorporate Philadelphia Electric Company's schedule commitment into a requirement by issuance of an order and requested consent from the Licensee. By letter dated April 27, 1998, the Licensee provided its consent to issuance of a Confirmatory Order.

III

The Licensee's commitment as set forth in its letter of April 27, 1998, is acceptable and is necessary for the NRC to conclude that public health and safety are reasonably assured. To preclude any schedule slippage and to assure public health and safety, the NRC staff has determined that the Licensee's commitment in its April 27, 1998, letter be confirmed by this Order. The Licensee has agreed to this action. Based on the above, and the Licensee's consent, this Order is immediately effective upon issuance.

IV

Accordingly, pursuant to sections 103, 161b, 161i, 161o, 182, and 186 of the Atomic Energy Act of 1954, as amended, and the Commission's regulations in 10 CFR 2.202 and 10 CFR Part 50, IT IS HEREBY ORDERED, effective immediately, that:

Philadelphia Electric Company shall complete final implementation of Thermo-Lag 330–1 fire barrier corrective actions at LGS, Units 1 and 2, described in the Philadelphia Electric Company's submittals to the NRC dated April 16 and December 29, 1993, February 4 and December 19, 1994, March 29 and August 2, 1995, May 2, 1996, March 24, 1997, and January 14, 1998, by completion of the April 1999 refueling outage for LGS, Unit 2.

The Director, Office of Nuclear Reactor Regulation, may relax or rescind, in writing, any provisions of this Confirmatory Order upon a showing by the Licensee of good cause.

V

Any person adversely affected by this Confirmatory Order, other than the Licensee, may request a hearing within 20 days of its issuance. Where good cause is shown, consideration will be given to extending the time to request a hearing. A request for extension of time must be made in writing to the Director, Office of Nuclear Reactor Regulation, U.S. Nuclear Regulatory Commission, Washington, D.C. 20555, and include a statement of good cause for the extension. Any request for a hearing shall be submitted to the Secretary, U.S. Nuclear Regulatory Commission, Attention: Chief, Rulemakings and Adjudications Staff, Washington, D.C. 20555. Copies of the hearing request shall also be sent to the Director, Office of Nuclear Reactor Regulation, U. S. Nuclear Regulatory Commission, Washington, D.C. 20555, to the Deputy Assistant General Counsel for Enforcement at the same address, to the Regional Administrator, NRC Region I, 475 Allendale Road, King of Prussia, Pennsylvania 19406–1415, and to the Licensee. If such a person requests a hearing, that person shall set forth with particularity the manner in which his/her interest is adversely affected by this Order and shall address criteria set forth in 10 CFR 2.714(d).

If a hearing is requested by a person whose interest is adversely affected, the Commission will issue an Order designating the time and place of any such hearing. If a hearing is held, the issue to be considered at such hearing shall be whether this Confirmatory Order should be sustained.

In the absence of any request for hearing, or written approval of an extension of time in which to request a hearing, the provisions specified in Section IV above shall be final 20 days from the date of this Order without further order or proceedings. If an extension of time for requesting a hearing has been approved, the provisions specified in Section IV shall be final when the extension expires if a hearing request has not been received.

An answer or a request for hearing shall not stay the immediate effectiveness of this Order.

Dated at Rockville, Maryland this 19 day of May 1998.

For the Nuclear Regulatory Commission.

Samuel J. Collins,

Director, Office of Nuclear Reactor Regulation.

[FR Doc. 98–13971 Filed 5–26–98; 8:45 am]

BILLING CODE 7590–01–P

NUCLEAR REGULATORY COMMISSION

[Docket No. 50–325 and 50–324]

Carolina Power & Light Company; Brunswick Steam Electric Plant, Units No. 1 and 2 Environmental Assessment and Finding of No Significant Impact

Introduction

The U. S. Nuclear Regulatory Commission (the Commission) is considering issuance of amendments to Facility Operating License Nos. DPR–71 and DPR–62 issued to the Carolina Power & Light Company (CP&L or the licensee) for operation of the Brunswick Steam Electric Plant, Units No. 1 and 2 (BSEP 1 & 2), respectively, located at the licensee's site in Brunswick County, North Carolina.

Environmental Assessment

Identification of the Proposed Action

This Environmental Assessment has been prepared to address potential environmental issues related to the licensee's application dated November 1, 1996, as supplemented by letters dated October 13, 1997, February 26, 1998, March 13, 1998, April 24, 1998, and May 22, 1998. The proposed amendments will replace the current BSEP 1 & 2 Technical Specifications (CTS) in their entirety with Improved Technical Specifications (ITS) based on Revison 1 to NUREG–1433, ''Standard Technical Specifications General Electric Plants BWR/4'' dated April 1995, and the CTS for BSEP 1 & 2.

The Need for the Proposed Action

It has been recognized that nuclear safety in all plants would benefit from improvement and standardization of TS. The Commission's ''NRC Interim Policy Statement on Technical Specification Improvements for Nuclear Power Reactors,'' (52 Fed. Reg. 3788, February 6, 1987), and later the Commission's ''Final Policy Statement on Technical Specification Improvements for Nuclear Power Reactors,'' 58 FR 39132 (July 22, 1993), formalized this need. To facilitate

the development of individual improved TS, each reactor vendor owners group (OG) and the NRC staff developed standard TS (STS). For General Electric plants, the STS are published as NUREG–1433, and this document was the basis for the new BSEP 1 & 2 TS. The NRC Committee to Review Generic Requirements (CRGR) reviewed the STS and made note of the safety merits of the STS and indicated its support of conversion to the STS by operating plants.

Description of the Proposed Change

The proposed revision to the TS is based on NUREG–1433 and on guidance provided in the Final Policy Statement. Its objective is to completely rewrite, reformat, and streamline the existing TS. Emphasis is placed on human factors principles to improve clarity and understanding. The Bases section has been significantly expanded to clarify and better explain the purpose and foundation of each specification. In addition to NUREG–1433, portions of the existing TS were also used as the basis for the ITS. Plant-specific issues (unique design features, requirements, and operating practices) were discussed at length with the licensee, and generic matters with the OG.

The proposed changes from the existing TS can be grouped into four general categories, as follows:

1. Non-technical (administrative) changes, which were intended to make the ITS easier to use for plant operations personnel. They are purely editorial in nature or involve the movement or reformatting of requirements without affecting technical content. Every section of the BSEP 1 & 2 TS has undergone these types of changes. In order to ensure consistency, the NRC staff and the licensee have used NUREG–1433 as guidance to reformat and make other administrative changes.

2. Relocation of requirements, which includes items that were in the existing BSEP 1 & 2 TS. The TS that are being relocated to licensee-controlled documents are not required to be in the TS under 10 CFR 50.36 and do not meet any of the four criteria in the Commission's Final Policy Statement for inclusion in the TS. They are not needed to obviate the possibility that an abnormal situation or event will give rise to an immediate threat to the public health and safety. The NRC staff has concluded that appropriate controls have been established for all of the current specifications, information, and requirements that are being moved to licensee-controlled documents. In general, the proposed relocation of items in the BSEP 1 & 2 TS to the Final Safety Analysis Report (FSAR), appropriate plant-specific programs, procedures and ITS Bases follows the guidance of the General Electric STS (NUREG–1433). Once these items have been relocated by removing them from the TS to licensee-controlled documents, the licensee may revise them under the provisions of 10 CFR 50.59 or other NRC staff-approved control mechanisms, which provide appropriate procedural means to control changes.

3. More restrictive requirements, which consist of proposed BSEP 1 & 2 ITS items that are either more conservative than corresponding requirements in the existing BSEP 1 & 2 TS, or are additional restrictions that are not in the existing BSEP 1 & 2 TS but are contained in NUREG–1433. Examples of more restrictive requirements include: placing a Limiting Condition of Operation (LCO) on plant equipment that is not required by the present TS to be operable; more restrictive requirements to restore inoperable equipment; and more restrictive surveillance requirements.

4. Less restrictive requirements are relaxations of corresponding requirements in the existing BSEP 1 & 2 TS that provide little or no safety benefit and place unnecessary burdens on the licensee. These relaxations were the result of generic NRC actions or other analyses. They have been justified on a case-by-case basis for BSEP 1 & 2, as will be described in the staff's Safety Evaluation to be issued with the license amendment, which will be noticed in the **Federal Register**.

In addition to the changes described above, the licensee proposed certain changes to the existing TS that deviated from the STS in NUREG–1433. These additional proposed changes are described in the licensee's application and in the staff's Notice of Consideration of Issuance of Amendment to Facility Operating License and Opportunity for a Hearing (62 FR 3719). Where these changes represent a change to the current licensing basis for BSEP 1 & 2, they have been justified on a case-by-case basis and will be described in the staff's Safety Evaluation to be issued with the license amendment.

Environmental Impacts of the Proposed Action

The Commission has completed its evaluation of the proposed action and concludes that the proposed TS conversion would not increase the probability or consequences of accidents previously analyzed and would not affect facility radiation levels or facility radiological effluents.

Changes that are adminstrative in nature would have no effect on the technical content of the TS, and are acceptable. The increased clarity and understanding these changes bring to the TS are expected to improve the operator's control of the plant in normal and accident conditions.

Relocation of requirements to licensee-controlled documents would not change the requirements themselves. Future changes to these requirements may be made by the licensee under 10 CFR 50.59 or other NRC-approved control mechanisms, which ensures continued maintenance of adequate requirements. All such relocations have been found to be in conformance with the guidelines of NUREG–1433 and the Final Policy Statement, and, therefore, are acceptable.

Changes involving more restrictive requirements would be likely to enhance the safety of plant operations and are acceptable.

Changes involving less restrictive requirements have been reviewed individually. When requirements have been shown to provide little or no safety benefit or to place unnecessary burdens on the licensee, their removal from the TS is justified. In most cases, relaxations previously granted to individual plants on a plant-specific basis were the result of a generic NRC action, or of agreements reached during discussions with the OG and are acceptable for BSEP 1 & 2. Generic relaxations contained in NUREG–1433 as well as proposed deviations from NUREG–1433 have also been reviewed by the NRC staff and are acceptable for BSEP 1 & 2.

In summary, the proposed revisions to the TS were found to provide control of plant operations such that reasonable assurance will be provided so that the health and safety of the public will be adequately protected.

These TS changes will not increase the probability or consequences of accidents, no changes are being made in the types of any effluent that may be released offsite, and there is no significant increase in the allowable public or occupational radiation exposure.

With regard to potential nonradiological impacts, the proposed action does not affect nonradiological plant effluents and has no other environmental impact.

Accordingly, the Commission concludes that there are no significant environmental impacts associated with the proposed action.

Alternatives to the Proposed Action

Since the Commission has concluded there is no significant environmental impact associated with the proposed amendments, any alternatives with equal or greater environmental impact need not be evaluated. The principal alternative to this action would be to deny the request for the amendment. Such action would not reduce the environmental impacts of plant operations.

Alternative Use of Resources

This action did not involve the use of any resources not previously considered in the Final Environmental Statement related to the operation of the BSEP 1 & 2 Electric Generating Plants.

Agencies and Persons Consulted

In accordance with its stated policy, on May 22, 1998, the staff consulted with the North Carolina State official, Mr. M. Fry, of the North Carolina Department of Environment and Natural Resources, Division of Radiation Protection. The State official had no comments.

Finding of No Significant Impact

Based upon the environmental assessment, the Commission concludes that the proposed action will not have a significant effect on the quality of the human environment. Accordingly, the Commission has determined not to prepare an environmental impact statement for the proposed amendment.

For further details with respect to this action, see the licensee's letter dated November 1, 1996, as supplemented on October 13, 1997, February 26, 1998, March 13, 1998, April 24, 1998, and May 22, 1998, which are available for public inspection at the Commission's Public Document Room, The Gelman Building, 2120 L Street, NW., Washington, DC, and at the local public document room located at the University of North Carolina at Wilmington, William Madison Randall Library, 601 College Road, Wilmington, North Carolina 28403–3297.

Dated at Rockville, Maryland this 22nd day of May 1998.

For the Nuclear Regulatory Commission.

Gordon E. Edison,

Acting Director, Project Directorate II–1, Division of Reactor Projects—I/II, Office of Nuclear Reactor Regulation.

[FR Doc. 98–14098 Filed 5–26–98; 8:45 am]

BILLING CODE 7590–01–P

OFFICE OF PERSONNEL MANAGEMENT

Proposed Collection; Comment Request for 1998 Presidential Management Intern Program Application

AGENCY: Office of Personnel Management.

ACTION: Notice.

SUMMARY: In accordance with the Paperwork Reduction Act of 1995 (Pub. L. 104–13, May 22, 1995), this notice announces that OPM intends to submit a request to the Office of Management and Budget (OMB) for renewal of authority to publish the 1998 Presidential Management Intern Program Application. The information contained in the PMI application is used by OPM's Employment Service to obtain nominations, and to screen and establish a nationwide competitive selection process. Applications are mailed to educational institutions at the beginning of each academic year. Students are nominated by their deans and chairpersons to compete in the PMI Program. The application is completed by the student (nominee) and submitted to the school official for review and nomination. After the initial review process, nominees are invited to participate in a structured assessment center process. Selection as a PMI Finalist is based on a review of the nominee's application, and participation in a structured assessment center process.

It is anticipated that 2000 applications will be received and processed in 1998. Number of hours required for completing PMI application forms by graduate programs deans or chairpersons is 1 hour per application=2000. Number of hours required per graduate student for completing application form is 1 hour=2000.

Comments are particularly invited on:

—Whether this collection of information is necessary for the proper performance of functions of the Office of Personnel Management, and whether it will have practical utility;

—Whether our estimate of the public burden of this collection of information is accurate, and based on valid assumptions and methodology; and

—Ways in which we can minimize the burden of the collection of information on those who are to respond, through the use of appropriate technological collection techniques or other forms of information technology.

For copies of the clearance package, call James M. Farron, Reports and Forms Manager, on (202) 418–3208, or by e-mail to jmfarron@opm.gov.

DATES: Comments on this proposal should be received on or before July 27, 1998.

ADDRESSES: Send or deliver comments to: Kathleen A. Keeney, Presidential Management Intern Program, William J. Green Jr., Federal Building, Room 3400, 600 Arch Street, Philadelphia, PA 19106.

FOR FURTHER INFORMATION CONTACT: Kathleen A. Keeney (215) 597–1920.

Janice R. Lachance,

Director, U.S. Office of Personnel Management.

[FR Doc. 98–13919 Filed 5–26–98; 8:45 am]

BILLING CODE 6325–01–M

OFFICE OF PERSONNEL MANAGEMENT

Federal Prevailing Rate Advisory Committee; Open Committee Meeting

According to the provisions of section 10 of the Federal Advisory Committee Act (Pub. L. 92–463), notice is hereby given that a meeting of the Federal Prevailing Rate Advisory Committee will be held on Thursday, June 11, 1998.

The meeting will start at 10:00 a.m. and will be held in Room 5A06A, Office of Personnel Management Building, 1900 E Street, NW., Washington, DC.

The Federal Prevailing Rate Advisory Committee is composed of a Chair, five representatives from labor unions holding exclusive bargaining rights for Federal blue-collar employees, and five representatives from Federal agencies. Entitlement to membership on the Committee is provided for in 5 U.S.C. 5347.

The Committee's primary responsibility is to review the Prevailing Rate System and other matters pertinent to establishing prevailing rates under subchapter IV, chapter 53, 5 U.S.C., as amended, and from time to time advise the Office of Personnel Management.

This scheduled meeting will start in open session with both labor and management representatives attending. During the meeting either the labor members or the management members may caucus separately with the Chair to devise strategy and formulate positions. Premature disclosure of the matters discussed in these caucuses would unacceptably impair the ability of the Committee to reach a consensus on the matters being considered and would disrupt substantially the disposition of its business. Therefore, these caucuses will be closed to the public because of

a determination made by the Director of the Office of Personnel Management under the provisions of section 10(d) of the Federal Advisory Committee Act (Pub. L. 92–463) and 5 U.S.C. 552b(c)(9)(B). These caucuses may, depending on the issues involved, constitute a substantial portion of a meeting.

Annually, the Chair compiles a report of pay issues discussed and concluded recommendations. These reports are available to the public, upon written request to the Committee's Secretary.

The public is invited to submit material in writing to the Chair on Federal Wage System pay matters felt to be deserving of the Committee's attention. Additional information on this meeting may be obtained by contacting the Committee's Secretary, Office of Personnel Management, Federal Prevailing Rate Advisory Committee, Room 5559, 1900 E Street, NW., Washington, DC 20415 (202) 606–1500.

Dated: May 13, 1998.

Phyllis G. Heuerman,

Acting Chair, Federal Prevailing Rate Advisory Committee.

[FR Doc. 98–13921 Filed 5–26–98; 8:45 am]

BILLING CODE 6325–01–P

RAILROAD RETIREMENT BOARD

Agency Forms Submitted for OMB Review

SUMMARY: In accordance with the Paperwork Reduction Act of 1995 (44 U.S.C. Chapter 35), the Railroad Retirement Board (RRB) has submitted the following proposal(s) for the collection of information to the Office of Management and Budget for review and approval.

Summary of Proposal(s).

(1) *Collection title:* Application for Search of Census Records.

(2) *Form(s) submitted:* G–256.

(3) *OMB Number:* 3220–0106.

(4) *Expiration date of current OMB clearance:* 7/31/1998.

(5) *Type of request:* Revision of a currently approved collection.

(6) *Respondents:* Individuals or households.

(7) *Estimated annual number of respondents:* 75.

(8) *Total annual responses:* 75.

(9) *Total annual reporting hours:* 13.

(10) *Collection description:* Under the Railroad Retirement Act, an applicant for benefits based on age must be supported by proof of age claimed. The application obtains proof of an applicant's age from the Bureau of the Census when other evidence is unavailable.

Additional Information or Comments

Copies of the form and supporting documents can be obtained from Chuck Mierzwa, the agency clearance officer (312–751–3363). Comments regarding the information collection should be addressed to Ronald J. Hodapp, Railroad Retirement Board, 844 North Rush Street, Chicago, Illinois 60611–2092 and the OMB reviewer, Laura Oliven (202–395–7316), Office of Management and Budget, Room 10230, New Executive Office Building, Washington, D.C. 20503.

Chuck Mierzwa,

Clearance Officer.

[FR Doc. 98–13937 Filed 5–26–98; 8:45 am]

BILLING CODE 7905–01–M

RAILROAD RETIREMENT BOARD

Agency Forms Submitted for OMB Review

SUMMARY: In accordance with the Paperwork Reduction Act of 1995 (44 U.S.C. Chapter 35), the Railroad Retirement Board (RRB) has submitted the following proposal(s) for the collection of information to the Office of Management and Budget for review and approval.

Summary of Proposal(s)

(1) *Collection title:* Representative Payee Monitoring.

(2) *Form(s) submitted:* G–99a, G–99c.

(3) *OMB Number:* 3220–0151.

(4) *Expiration date of current OMB clearance:* 7/31/1998.

(5) *Type of request:* Extension of a currently approved collection.

(6) *Respondents:* Individuals or households.

(7) *Estimated annual number of respondents:* 6,000.

(8) *Total annual responses:* 6,535.

(9) *Total annual reporting hours:* 2,032.

(10) *Collection description.* Under Section 12(a) of the Railroad Retirement Act, the RRB is authorized to select, make payments to, and conduct transactions with an annuitant's relative or some other person willing to act on behalf of the annuitant as a representative payee. The collection obtains information needed to determine if a representative payee is handling benefit payments in the best interest of the annuitant.

Additional Information or Comments

Copies of the form and supporting documents can be obtained from Chuck Mierzwa, the agency clearance officer (312–751–3363). Comments regarding the information collection should be addressed to Ronald J. Hodapp, Railroad Retirement Board, 844 North Rush Street, Chicago, Illinois 60611–2092 and the OMB reviewer, Laura Oliven (202–395–7316), Office of Management and Budget, Room 10230, New Executive Office Building, Washington, D.C. 20503.

Chuck Mierzwa,

Clearance Officer.

[FR Doc. 98–13938 Filed 5–26–98; 8:45 am]

BILLING CODE 7905–01–M

SECURITIES AND EXCHANGE COMMISSION

[Investment Company Act Release No. 23193; 812–11088]

Cowen & Co., et al.; Notice of Application

May 19, 1998.

AGENCY: Securities and Exchange Commission (''Commission'').

ACTION: Notice of application under section 6(c) of the Investment Company Act of 1940 (''Act'') for an exemption from section 15(a) of the Act.

SUMMARY OF THE APPLICATION: Applicants seek an order to permit the implementation, without prior shareholder approval, of new investment advisory agreements (''New Advisory Agreements'') following the acquisition by Societe Generale (''SG'') of certain assets, including current investment advisory agreements (''Existing Advisory Agreements''), from Cowen & Co. (''Current Adviser'') and Cowen Incorporated (together with the Current Adviser, ''Cowen''). The order would cover a period beginning at the later of the date the acquisition is completed (''Closing Date'') or the date on which the requested order is issued, and continue for a period of up to 150 days (but in no event later than December 31, 1998) (''Interim Period''). If shareholders approve the New Advisory Agreements, the order also would permit the payment of fees earned under the New Advisory Agreements during the Interim Period.

APPLICANTS: The Current Adviser and Societe Generale Securities Corporation (''SGSC'').

FILING DATES: The application was filed on March 24, 1998, and amended on May 8, 1998.

HEARING OR NOTIFICATION OF HEARING: An order granting the application will be issued unless the Commission orders a hearing. Interested persons may request

a hearing by writing to the Commission's Secretary and serving applicants with a copy of the request, personally or by mail. Hearing requests should be received by the Commission by 5:30 p.m. on June 15, 1998, and should be accompanied by proof of service on applicants in the form of an affidavit or, for lawyers, a certificate of service. Hearing requests should state the nature of the writer's interest, the reason for the request, and the issues contested. Persons who wish to be notified of a hearing may request notification by writing to the Commission's Secretary.

ADDRESSES: Secretary, Commission, 450 Fifth Street, N.W., Washington, D.C. 20549. Current Adviser, Financial Square, New York, New York 10005; SGSC, 1221 Avenue of The Americas, New York, New York 10020.

FOR FURTHER INFORMATION CONTACT: Michael W. Mundt, Staff Attorney, at (202) 942–0578, or George J. Zornada, Branch Chief, at (202) 942–0564 (Office of Investment Company Regulation, Division of Investment Management).

SUPPLEMENTARY INFORMATION: The following is a summary of the application. The complete application may be obtained for a fee at the Commission's Public Reference Branch, 450 Fifth St., NW., Washington, DC 20549, (202) 942–8090.

Applicants' Representations

1. The Current Adviser is a New York limited partnership registered under the Investment Advisers Act of 1940 (''Advisers Act'') whose general partner is Cowen Incorporated. Pursuant to separate investment advisory agreements, the Current Adviser serves as investment adviser to Cowen Income + Growth Fund, Inc., Cowen Standby Reserve Fund, Inc., Cowen Standby Tax-Exempt Reserve Fund, Inc., Cowen Large Cap Value Fund (a series of Cowen Series Funds, Inc.), Cowen Intermediate Fixed Income Fund, Cowen Government Securities Fund and Cowen Opportunity Fund (the latter three funds, each a series of Cowen Funds, Inc.) (each a ''Fund,'' and collectively, the ''Funds'').

2. On February 22, 1998, Cowen entered into an agreement with SG, a banking corporation organized under the laws of France, under which SG will acquire certain assets and assume certain liabilities of Cowen (the ''Acquisition''). In the Acquisition, the Current Adviser's advisory business will be transferred to SGSC, a subsidiary of SG. SGSC will be renamed SG Cowen Securities Corporation (''SG Cowen'') after the Acquisition, and a division or affiliate of SG Cowen will serve as the new investment adviser to each of the Funds (the ''New Adviser''). Applicants represent that the New Adviser either will have filed a form ADV with the Commission that becomes effective on or before the Closing Date or, as successor to the business of the Current Adviser, will have filed a form ADV with the Commission in reliance on section 203(g) of the Advisers Act. Applicants anticipate that the Closing Date will occur within the next three months and could occur as early as June 1, 1998.[1]

3. Applicants state that the Acquisition will result in an assignment and thus automatic termination of the Existing Advisory Agreements between the Funds and the Current Adviser under the Act and the Existing Advisory Agreements. Applicants request an exemption (i) to permit the implementation of New Advisory Agreements during the Interim Period without prior shareholder approval, and (ii) to permit the New Adviser to receive all fees earned under the New Advisory Agreements during the Interim Period upon approval of the New Advisory Agreements by shareholders of the Funds. Applicants assert that the New Advisory Agreements will contain substantially the same terms and conditions as the Existing Advisory Agreements, except for the identification of the New Adviser and the effective and termination dates.

4. Prior to the Closing Date, the board of directors of each Fund (each a ''Board,'' and collectively, the ''Boards''), including a majority of directors who are not interested persons of the Funds under section 2(a)(19) of the Act (''Disinterested Directors''), will meet in person, in accordance with section 15(c) of the Act, to evaluate whether the terms of the New Advisory Agreements are in the best interests of the Funds and their respective shareholders.[2] The Boards currently intend to meet on or around May 21, 1998.

5. The New Adviser and the Funds propose to enter into an escrow arrangement with an unaffiliated financial institution (''Escrow Agent''). The portion of the investment advisory fees earned by the New Adviser during the Interim Period under the New Advisory Agreements would be paid into an interest-bearing escrow account maintained by the Escrow Agent. The amounts in the escrow account (including interest earned on such paid fees) would be paid to the New Adviser only upon approval of each New Advisory Agreement by the applicable Fund's shareholders. In the absence of such approval, the amounts will be paid to the applicable Fund. The Board of the applicable Fund will be notified before any amounts are released from the escrow account.

Applicant's Legal Analysis

1. Section 15(a) of the Act provides, in pertinent part, that it shall be unlawful for any person to serve or act as an investment adviser of a registered investment company, except pursuant to a written contract that has been approved by the vote of a majority of the outstanding voting securities of such registered investment company. Section 15(a) of the Act further requires that such written contract provide for automatic termination in the event of its ''assignment.'' Section 2(a)(4) of the Act defines ''assignment'' to include any direct or indirect transfer of a contract by the assignor.

2. Applicants state that the acquisition by SG of certain assets including the Existing Advisory Agreements from Cowen will result in an ''assignment'' of the Existing Advisory Agreements, terminating such agreements according to the Act and their respective terms.

3. Rule 15a–4 under the Act provides, in pertinent part, that if an investment advisory contract with a registered investment company is terminated by assignment, the adviser may continue to serve for 120 days under a written contract that has not been approved by the company's shareholders, provided that: (i) the new contract is approved by that company's board of directors (including a majority of non-interested directors); (ii) the compensation to be paid under the new contract does not exceed the compensation that would have been paid under the contract most recently approved by the company's shareholders: and (iii) neither the adviser nor any controlling person of the adviser ''directly or indirectly receives money or other benefit'' in

[1] Applicants state that if the Closing Date precedes the issuance of an order, the New Adviser will serve as investment adviser after the Closing Date and prior to the issuance of the order in a manner consistent with its fiduciary duty to provide investment advisory services to the Funds, even though approval of the New Advisory Agreements has not yet been secured from the Funds' respective shareholders. Applicants also submit that in such event, the New Adviser will be entitled to receive from the Funds, with respect to the period from the Closing Date until the receipt of the order, no more than the actual out-of-pocket cost to the New Adviser for providing investment advisory services to the Funds.

[2] To the extent that the Boards cannot meet prior to the Closing Date, applicants acknowledge that the Funds may not rely on the exemptive relief requested in the application.

connection with the assignment. Applicants state that they may not be entitled to rely on rule 15a–4 because of the benefits that Cowen will receive as a result of the Acquisition.

4. Section 6(c) of the Act provides that the Commission may exempt any person, security, or transaction from any provision of the Act, if and to the extent that such exemption is necessary or appropriate in the public interest and consistent with the protection of investors and the purposes fairly intended by the policy and provisions of the Act. Applicants believe that the requested relief meets this standard.

5. Applicants submit that the terms and timing of the Acquisition were determined in response to a number of factors substantially unrelated to the Funds and that the Existing Advisory Agreements constitute a relatively small part of the Acquisition. Applicants state that the Closing Data does not allow a sufficient time to secure prior shareholder approval of the New Advisory Agreements. Applicants state that the requested relief will permit continuity of investment management of the Funds during the period following the Acquisition so that advisory services will not be disrupted. Applicants represent that the Funds will receive the same scope and quality of investment advisory services provided by essentially the same investment management personnel under the New Advisory Agreements as they receive under the Existing Advisory Agreements. If the investment management personnel changes materially, the New Adviser will apprise and consult with the Boards to ensure that the Boards, including a majority of the Disinterested Directors, are satisfied that the services provided by the New Adviser will not be diminished in scope and quality.

6. Applicants contend that to deprive the New Adviser of investment advisory fees during the Interim Period would be an unduly harsh and unreasonable penalty to attach to the Acquisition and would serve no useful purpose. Applicants note that the fees will not be released to the New Adviser by the Escrow Agent without an appropriate certification that the New Advisory Agreements have been approved by the Funds' respective shareholders.

Applicants' Conditions

Applicants agree as conditions to the issuance of the exemptive order requested by the application that:

1. The New Advisory Agreements will contain substantially the same terms and conditions as the Existing Advisory Agreements, except for the identification of the New Adviser and the dates of execution and termination.

2. The portion of the investment advisory fee earned by the New Adviser during the Interim Period will be maintained in an interest-bearing escrow account, and amounts in the account (including interest earned on such amounts) will be paid to the New Adviser only upon approval of each New Advisory Agreement by the applicable Fund's shareholders or in the absence of such approval, to the Fund.

3. Each Fund will promptly schedule a meeting of shareholders to vote on the approval of the New Agreements to be held within 150 days following the commencement of the Interim Period (but in no event later than December 31, 1998).

4. The Current Adviser will pay the costs of preparing and filing the application and the costs relating to the solicitation and approval of Fund shareholders of the New Advisory Agreements necessitated by the Acquisition.

5. Cowen and SG will take all appropriate actions to ensure that the scope and quality of investment advisory and other services to be provided to the Funds by the New Adviser during the Interim Period will be at least equivalent, in the judgment of the Boards, including a majority of the Disinterested Directors, to the scope and quality of services provided by the Current Adviser. In the event of any material change in investment management personnel providing advisory services pursuant to the New Advisory Agreements, the New Adviser will apprise and consult with the Boards to ensure that the Boards, including a majority of the Disinterested Directors, are satisfied that the services provided will not be diminished in scope or quality.

For the Commission, by the Division of Investment Management, under delegated authority.

Margaret H. McFarland,

Deputy Secretary.

[FR Doc. 98–13958 Filed 5–26–98; 8:45 am]

BILLING CODE 8010–01–M

SECURITIES AND EXCHANGE COMMISSION

[Investment Company Act Release No. 23197; File No. 812–10974]

Mitchell Hutchins Portfolios, et al.; Notice of Application

May 20, 1998.

AGENCY: Securities and Exchange Commission (''Commission'').

ACTION: Notice of application for an order under section 17(d) of the Investment Company Act of 1940 (the ''Act'') and rule 17d–1 under the Act.

SUMMARY OF APPLICATION: Applicants request an order that would permit certain registered open-end management investment companies relying on section 12(d)(1)(G) of the Act to enter into a special servicing agreement.

APPLICANTS: Mitchell Hutchins Portfolios (the ''Trust''); PaineWebber America Fund, PaineWebber Cashfund, Inc. (''Cashfund''), PaineWebber Investment Series, PaineWebber Investment Trust, PaineWebber Managed Investments Trust, PaineWebber Olympus Fund, PaineWebber Securities Trust, (the ''PaineWebber Investment Companies,'' and together with the Trust, the ''PaineWebber Mutual Funds''), Mitchell Hutchins Asset Management Inc. (''Mitchell Hutchins''), and PaineWebber Incorporated (''PaineWebber''). Applicant also request relief for each existing or future registered open-end management investment company and series thereof that is part of the same group of investment companies as the PaineWebber Mutual Funds under section 12(d)(1)(G)(ii) of the Act, and which is, or will be, advised by Mitchell Hutchins or PaineWebber or any entity controlling, controlled by, or under common control with Mitchell Hutchins or PaineWebber, or for which Mitchell Hutchins or PaineWebber or any entity controlling, controlled by, or under common control with Mitchell Hutchins or PaineWebber serves, or will serve as principal underwriter (collectively, the ''PaineWebber Family of Funds'').

FILING DATES: The application was filed on January 26, 1998. Applicants have agreed to file an amendment during the notice period, the substance of which is reflected in this notice.

HEARING OR NOTIFICATION OF HEARING: An order granting the application will be issued unless the Commission orders a hearing. Interested persons may request a hearing by writing to the Commission's Secretary and serving applicants with a copy of the request, personally or by mail. Hearing requests should be received by the Commission by 5:30 p.m. on June 15, 1998, and should be accompanied by proof of service on applicants, in the form of an affidavit or, for lawyers, a certificate of service. Hearing requests should state the nature of the writer's interest, the reason for the request, and the issues contested. Persons who wish to be notified of a hearing may request

notification by writing to the Commission's Secretary.

ADDRESSES: Secretary, Securities and Exchange Commission, 450 Fifth Street, NW., Washington, D.C. 20549. Applicants, 1285 Avenue of the Americas, New York, NY 10019.

FOR FURTHER INFORMATION CONTACT: Kathleen L. Knisely, Staff Attorney, at (202) 942–0517, or Nadya B. Roytblat, Assistant Director, at (202) 942–0564 (Division of Investment Management, Office of Investment Company Regulation).

SUPPLEMENTARY INFORMATION: The following is a summary of the application. The complete application may be obtained for a fee at the Commission's Public Reference Branch, 450 Fifth Street, NW, Washington, DC 20549 (tel. 202–942–8090).

Applicants' Representations

1. The Trust, a Delaware business trust, is an open-end management investment company registered under the Act. The Trust currently offers three portfolios (the ''Portfolios'') which will invest all, or substantially all, of their assets in shares of other investment companies in the PaineWebber Family of Funds (''Underlying Funds''),[1] in reliance on section 12(d)(1)(G) of the Act and thereby operate as a fund of funds. The Portfolios will allocate their assets among the following Underlying Funds: PaineWebber Global Equity Fund, PaineWebber Global Income Fund, PaineWebber Growth Fund, PaineWebber Growth and Income Fund, PaineWebber Small Cap Fund, PaineWebber High Income Fund, PaineWebber Investment Grade Income Fund, PaineWebber Low Duration U.S. Government Income Fund, PaineWebber U.S. Government Income Fund, and Cashfund. In the future, other registered open-end management investment companies in the PaineWebber Family of Funds may be added as Underlying Funds. Each Portfolio and each Underlying Fund is authorized to issue multiple classes of shares in accordance with rule 18f–3 under the Act.

2. Mitchell Hutchins and PaineWebber (collectively, the ''Advisers'') are registered as investment advisers under the Investment Advisers Act of 1940. Mitchell Hutchins is a subsidiary of PaineWebber, which is wholly owned by Paine Webber Group, Inc., a publicly owned financial services holding company. Mitchell Hutchins serves as investment adviser and administrator to the Portfolios. Mitchell Hutchins also serves as the principal underwriter of each Portfolios's shares and each Underlying Fund's shares (other than Cashfund, for which PaineWebber serves as principal underwriter). Mitchell Hutchins or PaineWebber serves as investment adviser to the Underlying Funds.

3. Applicants propose to enter into a special servicing agreement (''Servicing Agreement'') among each Portfolio, the Underlying Funds and the Adviser. Under the Servicing Agreement, the Underlying Funds would bear the expenses of the Portfolio (other than advisory fees and rule 12b–1 fees) in proportion to the average daily value of the Underlying Fund's shares owned by the Portfolio. Payments by an Underlying Fund under the Servicing Agreement would be a fund-wide expense of the Underlying Fund.

4. Applicants believe that each Portfolio creates savings to the Underlying Funds primarily due to a reduction in the administrative expenses incurred by the Underlying Funds as a result of the avoidance of numerous shareholder accounts which would have been established if investors in the Portfolios had invested directly in the Underlying Funds. No Underlying Fund would bear any expenses of a Portfolio that exceed Net Benefits as defined in the condition below, to the Underlying Fund from the arrangement.

Applicants' Legal Analysis

1. Section 17(d) of the Act and rule 17d–1 under the Act provide that an affiliated person of, or a principal underwriter for, a registered investment company, or an affiliate of such person or principal underwriter, acting as principal, shall not participate in, or effect any transaction in connection with, any joint enterprise or other joint arrangement in which the registered investment company is a participant unless the Commission has issued an order approving the arrangement. Because the Adviser is an affiliated person of each Portfolio and each Underlying Fund and because the Portfolios and Underlying Funds share a common board of directors/trustees (''Board''), each of the Portfolios and Underlying Funds advised by the Adviser could be deemed to be under common control with all the other Portfolios and Underlying Funds, and therefore, an affiliated person of those Funds. Consequently, the Servicing Agreement could be deemed to be a joint transaction.

2. Rule 17d–1 under the Act provides that, in passing upon exemptive requests under the rule, the Commission considers whether the investment company's participation in the joint enterprise is consistent with the provision, policies and purposes of the Act, and the extent to which such participation is on a basis different from, or less advantageous than that of other participants.

3. Applicants request relief under section 17(d) and rule 17d–1 to permit them to enter into the Service Agreement. Applicants contend that each Underlying Fund will pay a Portfolio's expenses only in direct proportion to the average daily value of each Underlying Fund's shares held by each Portfolio to ensure that expenses of the Portfolios will be borne proportionately and fairly. Applicants also state that prior to an Underlying Fund's entering into a Service Agreement, and at least annually thereafter, the Board of the Underlying Fund, including a majority of directors who are not interested persons under section 2(a)(19) of the Act (''Disinterested Directors''), must determine that the Servicing Agreement will result in Net Benefit, as defined in the condition below, to the Underlying Fund. In making the annual determination, one of the factors the Board must consider is the amount of Net Benefits actually experienced by each class of shareholders of the Underlying Fund and the Underlying Fund as a whole during the preceding year. For these reasons, the applicants believe the requested relief meets the standards of section 17(d) of the Act and rule 17d–1 under the Act.

Applicants' Condition

Applicants agree that any order granting the requested relief will be subject to the following condition:

Prior to the Underlying Fund's entering into a Servicing Agreement, and at least annually thereafter, the Board of the Underlying Fund, including a majority of Disinterested Directors of the Underlying Fund, must determine that the Servicing Agreement will result in quantifiable benefits to each class of shareholders of the Underlying Fund and to the Underlying Fund as a whole that will exceed the costs of the Servicing Agreement borne by each class of shareholders of the Underlying Fund and by the Underlying Fund as a whole (''Net Benefits''). In making the annual determination, one of the factors the Board must consider is the amount of Net Benefits actually experienced by each class of shareholders of the Underlying Fund and the Underlying Fund as a whole during the preceding year. The Underlying Fund will preserve for a period of not less than six years from

[1] The Portfolios may not be Underlying Funds and no Portfolio will invest in another Portfolio.

the date of a determination of the Board, the first two years in an easily accessible place, a record of the determination and the basis and information upon which the determination was made. This record will be subject at all times to examination by the Commission and its staff.

For the Commission, by the Division of Investment Management, under delegated authority.

Margaret H. McFarland,

Deputy Secretary.

[FR Doc. 98–13956 Filed 5–26–98; 8:45 am]

BILLING CODE 8010–01–M

SECURITIES AND EXCHANGE COMMISSION

[Investment Company Act Release No. 23192; 812–10596]

Stein Roe Income Trust, et al.; Notice of Application

May 19, 1998.

AGENCY: Securities and Exchange Commission (''SEC'').

ACTION: Notice of application for an order under section 17(d) of the Investment Company Act of 1940 (the ''Act'') and rule 17d–1.

SUMMARY OF THE APPLICATION: Applicants request an order to permit certain registered investment companies to deposit uninvested cash balances in a joint account to be used to enter into short-term investments.

APPLICANTS: Stein Roe Income Trust, Stein Roe Investment Trust, Stein Roe Municipal Trust, Stein Roe Institutional Trust, Stein Roe Advisor Trust, Stein Roe Trust, SR&F Base Trust (each a ''Trust,'' and collectively, the ''Trusts''), and Stein Roe & Farnham Incorporated (the ''Adviser'').

FILING DATES: The application was filed on March 26, 1997 and amended on August 5, 1997 and April 17, 1998.

HEARING OR NOTIFICATION OF HEARING. An order granting the application will be issued unless the SEC orders a hearing. Interested persons may request a hearing by writing to the SEC's Secretary and serving applicants with a copy of the request, personally or by mail. Hearing requests should be received by the SEC by 5:30 p.m. on June 15, 1998, and should be accompanied by proof of service on applicants in the form of an affidavit or, for lawyers, a certificate of service. Hearing requests should state the nature of the writer's interest, the reason for the request, and the issues contested. Persons who wish to be notified of a hearing may request notification by writing to the SEC's Secretary.

ADDRESSES: Secretary, SEC, 450 Fifth Street, N.W., Washington, D.C. 20549. Applicants, c/o Cameron S. Avery, Bell, Boyd & Lloyd, Three First National Plaza, Suite 3300, Chicago, IL 60602.

FOR FURTHER INFORMATION CONTACT: Michael W. Mundt, Staff Attorney, at (202) 942–0578, or Nadya B. Roytblat, Assistant Director, at (202) 942–0564 (Office of Investment Company Regulation, Division of Investment Management).

SUPPLEMENTARY INFORMATION: The following is a summary of the application. The complete application may be obtained for a fee at the SEC's Public Reference Branch, 450 Fifth Street, NW., Washington, DC 20549 (tel. 202–942–8090).

Applicant's Representations

1. Each Trust, other than SR&F Base Trust (''Base Trust''), is organized as a business trust under the laws of Massachusetts. Base Trust is organized as a common law trust under the laws of Massachusetts. Each Trust is registered under the Act as an open-end management investment company and has, or intends to have, multiple series (''Funds''). Base Trust was organized so that its various series could serve as master funds in a master-feeder structure. Currently, each series of Stein Roe Advisor Trust, Stein Roe Institutional Trust, Stein Roe Trust, Stein Roe Investment Trust (other than Stein Roe Emerging Markets Fund and Stein Roe Capital Opportunities Fund), Stein Roe Municipal Money Market Fund (a series of Stein Roe Municipal Trust), and Stein Roe High Yield Fund (a series of Stein Roe Income Trust) operate as feeder funds.

2. The Adviser, a wholly-owned indirect subsidiary of Liberty Financial Companies, Inc., is registered as an investment adviser under the Investment Advisers Act of 1940 and provides investment advisory services to the respective series of the Base Trust and to each of the Funds that are not feeder funds. The Adviser also provides administrative, accounting and bookkeeping services to certain of the Funds. The Adviser has discretion to purchase and sell securities for each Fund in accordance with that Fund's investment objectives, policies and restrictions.

3. Applicants request that any relief granted pursuant to the application also apply to any other registered open-end management investment company and series thereof for which the Adviser may serve as investment adviser in the future (''Future Funds''). Any Future Fund relying on the requested relief will do so only in compliance with the terms and conditions of the application.

4. The assets of the Funds are held by State Street Bank and Trust Company (''State Street''). On each trading day, some or all of the Funds generally have uninvested cash balances in their accounts. Each Fund is authorized to invest its uninvested cash assets in repurchase agreements and certain short-term money market instruments. Currently, such cash balance of each Fund is used on an individual basis to invest in short-term instruments, including individual issues of commercial paper or United States Government agency paper. Applicants assert that these separate purchases result in certain inefficiencies that limit a Fund's return on its cash balances. In addition, the assets of some Funds are too small or become available too late on a given day to be invested effectively on an individual basis.

5. Applicants propose to deposit all or a portion of their uninvested cash balances into a single joint account (''Joint Account'') to enter into one or more short-term investment transactions, including repurchase agreements ''collateralized fully'' as defined in rule 2a–7 under the Act and other short-term money market instruments that constitute ''eligible securities'' as defined in rule 2a–7 under the Act. All counterparties to repurchase agreements entered into through the Joint Account are expected to be banks and broker-dealers. Repurchase agreements will be entered into on a ''hold-in-custody'' basis (i.e., repurchase agreements where the counterparty or one of its affiliated persons may have possession of, or control over, the collateral subject of the agreement) only where cash is received very late in the business day and otherwise would be unavailable for investment. Purchases of short-term money market instruments will be made from dealers in the open market or directly from issuers and will include investments in various taxable and tax-exempt short-term money market instruments with overnight, over-the-weekend or over-the-holiday maturities.

6. Any repurchase agreements entered into through the Joint Accounts will comply with the terms of Investment Company Act Release No. 13005 (February 2, 1983) and interpretations of the staff of the SEC. Applicants acknowledge that they have a continuing obligation to monitor the SEC's published statements on repurchase agreements and represent that the repurchase agreement transactions entered into through a Joint Account will comply with future

positions of the SEC to the extent that such positions set forth different or additional requirements regarding repurchase agreements. In the event that the SEC sets forth guidelines with respect to other short-term investments, all such investments made through any Joint Account will comply with those guidelines.

7. The proposed Joint Account would not be distinguishable from any other account maintained by State Street or a Fund, except that monies from multiple Funds would be deposited on a commingled basis. The sole function of the Joint Account would be to provide a convenient means of aggregating what otherwise would be two or more daily transactions for each Fund necessary to manage its respective daily uninvested cash balance. Each Fund will participate in the Joint Account and in any given investment made by the Joint Account on the same voluntary basis as every other participant in the Joint Account and in conformity with that Fund's investment objectives, policies and restrictions. If a tax-exempt money market fund contributes cash to the Joint Account, the cash will only be invested in securities that qualify for purchase by a tax-exempt money market fund under rule 2a–7 as it may be amended from time to time. Participants will not be required either to invest a minimum amount or to maintain a minimum balance in the Joint Account. Each participant will retain the sole ownership rights to any of its assets invested in the Joint Account, including income payable on the invested assets.

8. The applicants anticipate that, under certain circumstances, the Joint Account may invest in more than one repurchase agreement or short-term money market instrument on a given day and that, under such circumstances, each participant in the Joint Account would not necessarily have its cash invested in every repurchase agreement entered into and/or short-term money market instrument purchased through the Joint Account. Such a situation could occur for a variety of reasons, including a Fund's investment restrictions, the unavailability of a Fund's cash until after repurchase agreements have been negotiated on a given day, or a Fund's determination to invest its cash individually. The Adviser believes that no conflict of interest or potential for favoring one Fund over another arises merely as a result of the fact that the participating Funds may not always be allocated a pro rata portion of every investment made through the Joint Account.

9. The Adviser will have no monetary participation in the Joint Account, but will be responsible for investing assets in the Joint Account, establishing accounting and control procedures, and fairly allocating investment opportunities among the Funds. The recordkeeping system for the proposed Joint Account will be substantively identical to that which would be used if several joint accounts were established, with each investing in only a specific type of instrument. Among other recordkeeping and accounting control mechanisms, the Adviser will document each participant's pro rata portion of each joint investment, including investment amounts and the proportionate income to be received by each participant.

Applicant's Legal Analysis

1. Section 17(d) of the Act and rule 17d–1 under the Act prohibit an affiliated person of a registered investment company, or an affiliated person of such person, from participating in any joint enterprise or other joint arrangement in which such investment company is a participant, without an SEC order. Rule 17d–1 provides that in passing upon such applications, the SEC may consider the extent to which an entity's participation in a joint arrangement or enterprise is on a basis different or less advantageous than that of other participants.

2. The Funds, by participating in the Joint Account, and the Adviser, by managing the Joint Account, could be deemed to be ''joint participants'' in a ''transaction'' within the meaning of section 17(d) of the Act. In addition, the proposed Joint Account could be deemed to be a ''joint enterprise or other joint arrangement'' within the meaning of rule 17d–1 under the Act.

3. Applicants assert that participants in the Joint Account could save significant amounts in yearly transaction fees by reducing the total number of transactions, thereby increasing the rate of return on investments. Because the Joint Account could invest larger amounts than the individual Funds, the rate of return for investments in the Joint Account may also be higher than could be negotiated by the Funds individually. The existence of a Joint Account could increase the number of dealers willing to enter into investment transactions with the participants, enhancing flexibility in the management of cash balances and reducing the possibility that any participant would have an uninvested cash balance overnight. The use of a single Joint Account could result in savings of the costs of establishing and maintaining several different accounts. By reducing the number of trade tickets that each repurchase agreement and/or short-term money market instrument counterparty has to write, the Joint Account also could simplify transactions and reduce opportunity for errors.

4. Applicants submit that the participation by the respective Funds in the Joint Account would be consistent with the provisions, policies and purposes of the Act, and would be on a basis that is no different from or less advantageous than that of other participating Funds. Although the Adviser might gain some benefit through administrative convenience and possible reduction in clerical costs, the participating Funds and their shareholders will be the primary beneficiaries of the Joint Account because the Joint Account is likely to permit a greater return on short-term investments.

Applicants' Conditions

Applicants will comply with the following as conditions to any order granted by the SEC:

1. A separate Joint Account will be established with State Street. Each Fund will be permitted to deposit its uninvested net cash balances into the Joint Account on a daily basis. The Joint Account will not be distinguishable from any other accounts maintained by the participants except that monies will be deposited in the Joint Account on a commingled basis. The Joint Account will not have a separate existence and will not have any indicia of a separate legal entity. The sole function of the Joint Account will be to provide a convenient way of aggregating individual transactions which would otherwise require daily management by the Adviser of uninvested cash balances.

2. Cash in the Joint Account will be invested by the Adviser in one or more (a) repurchase agreements ''Collateralized Fully'' as defined in rule 2a–7 under the Act, and/or (b) short-term money market instruments that constitute ''Eligible Securities'' (as defined in rule 2a–7 under the Act) with overnight, over-the-weekend or over-the-holiday maturities. Any repurchase agreements will have a remaining maturity of 60 days or less and other short-term investments will have a remaining maturity of 90 days or less, each as calculated in accordance with rule 2a–7 under the Act.

3. All investments held by the Joint Account will be valued on an amortized cost basis to the extent permitted by applicable SEC releases, rules or orders.

4. Each participating Fund valuing its net assets in reliance upon rule 2a–7

under the Act will use the average maturity of the instrument(s) in the Joint Account in which such Fund has an interest (determined on a dollar weighted basis) for the purpose of computing the Fund's average portfolio maturity with respect to the portion of its assets held in the Joint Account for that day.

5. In order to ensure that there will be no opportunity for one participant to use any part of a balance of the Joint Account credited to another participant, no participant will be allowed to create a negative balance in the Joint Account for any reason, although each Fund will be permitted to draw down its entire balance at any time. Each Fund's decision to invest in the Joint Account will be solely at its option, and no Fund will be obligated either to invest in the Joint Account or to maintain any minimum balance in the Joint Account. In addition, each Fund will retain the sole rights of ownership to any of its assets invested in the Joint Account, including interest payable on such assets in the Joint Account.

6. Not every participant in the Joint Account will necessarily have its cash invested in every short-term investment entered into through the Joint Account. However, to the extent that a participant's cash is applied to a particular short-term investment made through the Joint Account, the participant will participate in and own a proportionate share of such short-term investment, and any income earned or accrued thereon, based upon the percentage of such investment purchased with monies contributed by the participant.

7. The Adviser will administer the investment of cash balances in and operations of the Joint Account as part of its general duties under its existing or any future investment advisory contracts will the Funds and the Adviser will not collect any additional or separate fees from any Fund for advising the Joint Account.

8. The administration of the Joint Account will be within the fidelity bond coverage required by section 17(g) of the Act and rule 17g–1 thereunder.

9. The Board of Trustees of each Trust that has Funds and/or Future Funds participating in the Joint Account will adopt procedures pursuant to which the Joint Account will operate, which will be reasonably designed to provide that the requirements of this application will be met. The Board of Trustees of each Trust that has Funds and/or Future Funds participating in the Joint Account will make and approve such changes as each deems necessary to ensure that such procedures are followed. In addition, each of such Board of Trustees will determine, no less frequently than annually, that the Joint Account has been operated in accordance with the proposed procedures and will permit continued participation by those Funds in the Joint Account only if it determines that there is a reasonable likelihood that the Fund and its shareholders will benefit from the Joint Account.

10. Any short-term investments made through the Joint Account will satisfy the investment criteria of all participants in that investment.

11. The Adviser and State Street will maintain records documenting, for any given day, each participant's aggregate investment in the Joint Account and its pro rata share of each investment made through the Joint Account. The records will be maintained in conformity with section 31 of the Act and the rules and regulations thereunder.

12. Short-term investments held in the Joint Account generally will not be sold prior to maturity unless: (a) The Adviser believes the investment no longer presents minimal credit risks; (b) the investment no longer satisfies the investment criteria of all participants in the investment because of downgrading or otherwise; or (c) in the case of a repurchase agreement, the counterparty defaults. The Adviser may, however, sell any short-term investment (or any fractional portion thereof) on behalf of some or all participants prior to the maturity of the investment if the cost of such transactions will be borne solely by the selling participants and the transactions will not adversely affect other participants participating in the Joint Account. In no case would an early termination by less than all participants be permitted if it would reduce the principal amount or yield received by other participants in the Joint Account or otherwise adversely affect the other participants. Each participant in the Joint Account will be deemed to have consented to such sale and partition of the investments in the Joint Account.

13. Short-term investments held through the Joint Account with a remaining maturity of more than seven days, as calculated pursuant to rule 2a–7 under the Act, would be considered illiquid and would be subject to the restriction that a Fund may not invest more than 15% or, in the case of a money market fund, more than 10% (or, in either such case, such other percentage as set forth by the SEC from time to time) of its net assets in illiquid securities, if the Adviser cannot sell the instruments, or the Fund's fractional interest in such instrument, pursuant to the preceding condition.

14. Future Funds will be permitted to participate in the Joint Account arrangement only on the same terms and conditions as the Funds have set forth herein.

For the SEC, by the Division of Investment Management, pursuant to delegated authority.

Margaret H. McFarland,

Deputy Secretary.

[FR Doc. 98–13959 Filed 5–26–98; 8:45 am]

BILLING CODE 8010–01–M

SECURITIES AND EXCHANGE COMMISSION

[Rel No. IC–23194; 812–11114]

UBS Investor Portfolios Trust, et al.; Notice of Application

May 20, 1998.

AGENCY: Securities and Exchange Commission (''SEC'').

ACTION: Notice of application under section 6(c) of the Investment Company Act of 1940 (the ''Act'') for an exemption from section 15(a) of the Act.

SUMMARY OF APPLICATION: Applicants seek an order to permit the implementation, without prior shareholder approval, of new investment advisory and sub-advisory agreements (''New Advisory Agreements'') in connection with the merger of Union Bank of Switzerland (''UBS'') and Swiss Bank Corporation (''SBC''). The order would cover a period of up to 150 days following the later of: (i) date on which the transactions contemplated by the merger agreement are consummated (the ''Closing Date''), or (ii) the date upon which the requested order is issued (but in no event later than December 31, 1998) (the ''Interim Period''). The order also would permit UBS-New York Branch (''UBS–NY Branch''), UBS Asset Management (New York) Inc. (''UBSAM–NY''), and UBS International Investment London Limited (UBSII) (collectively, the ''Advisers''), following shareholder approval, to receive all fees earned under the New Advisory Agreements during the Interim Period.

Applicants: UBS Investor Portfolios Trust (''UBS Investor Portfolios''), UBS, UBSAM–NY, and UBSIL.

Filing Dates: The application was filed on April 20, 1998. Applicants have agreed to file an amendment during the notice period, the substance of which is included in this notice.

Hearing or Notification of Hearing: An order granting the application will be issued unless the SEC orders a hearing. Interested persons may request a

hearing by writing to the SEC's Secretary and serving applicants with a copy of the request, personally or by mail. Hearing requests should be received by the SEC by 5:30 p.m. on June 15, 1998, and should be accompanied by proof of service on applicants, in the form of an affidavit or, for lawyers, a certificate of service. Hearing requests should state the nature of the writer's interest, the reason for the request, and the issues contested. Persons may request notification of a hearing by writing to the SEC's Secretary.

ADDRESSES: Secretary, SEC, 450 Fifth Street, NW, Washington, DC 20549. Applicants, c/o Naomi Friedland-Wechsler, Esq., Union Bank of Switzerland, 1345 Avenue of the Americas, New York, New York 10105.

FOR FURTHER INFORMATION CONTACT: J. Amanda Machen, Senior Counsel, at (202) 942–7120, or Mary Kay Frech, Branch Chief, at (202) 942–0564 (Division of Investment Management, Office of Investment Company Regulation).

SUPPLEMENTARY INFORMATION: The following is a summary of the application. The complete application may be obtained for a fee at the SEC's Public Reference Branch, 450 Fifth Street, NW, Washington, DC 20549 (tel. 202–942–8090).

Applicants' Representations

1. UBS, directly and through its subsidiaries, offers a wide range of financial services worldwide, including asset management and investment advisory services. UBS conducts its asset management business in the United States through its branch located in New York, UBS–NY Branch, and through its wholly-owned indirect subsidiaries, UBSAM–NY and UBSIL. UBSAM–NY and UBSII are both registered under the Investment Advisers Act of 1940 (''Advisers Act''). UBS–NY Branch is not so registered, in reliance on section 202(a)(11)(A) of the Advisers Act. UBS–NY Branch serves as investment adviser to UBS Investor Portfolios, and open-end management investment company registered under the Act, which organized in a master-feeder structure with six active portfolios and one in registration (each portfolio, a ''Fund,'' and collectively, the ''Funds'').[1] UBSAM–NY and UBSII serve as investment sub-advisers to certain of the Funds.[2]

2. UBS and SBC have agreed to merge into a newly created entity (''New UBS'') under the terms of a merger agreement dated December 5/6, 1997 (''Merger Agreement''). Upon consummation of the transactions contemplated by the Merger Agreement (''Merger''), New UBS will be owned approximately 60% by former UBS stockholders and 40% by former SBC stockholders. Upon completion of the Merger, UBS and SBC will both cease to exist and all of their assets, including the stock of the Adviser subsidiaries, will become assets of New UBS.

3. Applicants state that the Merger may result in an assignment and termination of the existing advisory and sub-advisory agreements of UBS–NY Branch and UBSAM–NY. Because the existing advisory agreement of UBSII with UBS Investor Portfolios terminates by its terms when the related UBS–NY Branch advisory agreement terminates, applicants state that Merger also may result in termination of this agreement (together with the existing advisory agreements of UBS–NY Branch and UBSAM–NY, the ''Existing Advisory Agreements''). Applicants request an exemption to permit the implementation, without prior shareholder approval, of the New Advisory Agreements. The requested exemption will cover the Interim Period of not more than 150 days, beginning on the later of (i) the Closing Date or (ii) the date on which the order requested by this application is issued and continuing with respect to each Fund through the date on which each New Advisory Agreement is approved or disapproved by the Fund's shareholders, but in no event after December 31, 1998. Applicants state that the terms and conditions of the corresponding Existing and New Advisory Agreements will be the same in all material respects, except for the dates of execution and termination. The Closing Date may occur as early as June 1, 1998.[3]

4. The board of directors of each Fund (the ''Boards'') met on May 12, 1998, in accordance with section 15(c) of the Act, to consider and evaluate the New Advisory Agreements and determined that the New Advisory Agreements were in the best interests of the Funds and their respective shareholders. The Boards also voted to recommend that the Funds' respective shareholders approve the New Advisory Agreements.

5. Applicants propose to enter into an escrow arrangement with an unaffiliated financial institution (''Escrow Agent''). The fees earned by the Advisers under the New Advisory Agreements during the Interim Period will be paid into an account maintained by the Escrow Agent. The Escrow Agent will release the amounts held in the escrow account (including any interest earned): (a) to the Advisers only upon receipt of certification that the New Advisory Agreements have been approved by the shareholders of the relevant Fund; or (b) to the relevant Fund in the absence of approval by its shareholders. Before any certification is released, the relevant Board will be notified.

Applicants' Legal Analysis

1. Section 15(a) of the Act provides, in pertinent part, that it shall be unlawful for any person to serve or act as an investment adviser of a registered investment company, except pursuant to a written contract that has been approved by the vote of a majority of the outstanding voting securities of the registered investment company. Section 15(a) of the Act further requires that the written contract provide for automatic termination in the event of its ''assignment.'' Section 2(a)(4) of the Act defines ''assignment'' to include any direct or indirect transfer of a contract by the assignor, or of a controlling block of the assignor's outstanding voting securities by a security holder of the assignor.

2. Applicants believe that the Merger will not result in a transfer of a controlling block of UBS under section 2(a)(4) of the Act. Applicants state, however, that under the terms of the Merger and the current business plan of New UBS, certain changes in portfolio management personnel, structure and process are expected at UBS–NY Branch and UBSAM–NY. Applicants assert that these changes could result in a change of the actual control or management of UBS–NY Branch and UBSAM–NY. Applicants state that there may therefore be an assignment, and thus

[1] The six portfolios include: UBS Bond Portfolio, UBS High Yield Bond Portfolio, UBS Value Equity Portfolio, UBS Large Cap Growth Portfolio, UBS Small Cap Portfolio, and UBS International Equity Portfolio.

[2] UBSAM–NY serves as sub-adviser to UBS High Yield Bond Portfolio, UBS Large Cap Growth Portfolio, and UBS Small Cap Portfolio; UBSII serves as sub-adviser to UBS International Equity Portfolio.

[3] Applicants state that if the Closing Date precedes the issuance of the requested order, the Advisers will serve as investment advisers after the Closing Date and prior to the issuance of the order in a manner consistent with their fiduciary duty to provide investment advisory services to the Funds even though appoval of the New Advisory Agreements has not yet been secured from the Funds' respective shareholders. Applicants also state that in such event the Advisers will be entitled to receive from the Funds, from the Closing Date until receipt of the requested order, no more than the actual out-of-pocket costs to the Advisers for providing investment advisory services to the Funds.

automatic termination, of their Existing Advisory Agreements. In addition, applicants state that the Existing Advisory Agreement of UBSII with UBS Investor Portfolios will terminate in accordance with its terms.

3. Rule 15a–4 under the Act provides, in pertinent part, that if an investment advisory contract with an investment company is terminated by an assignment in which the adviser does not directly receive a benefit, the adviser may continue to serve for 120 days under a written contract that has not been approved by the company's shareholders, provided that: (a) the new contract is approved by the company's board of directors (including a majority of the non-interested directors); (b) the compensation to be paid under the new contract does not exceed the compensation that would have been paid under the contract most recently approved by the company's shareholders; and (c) neither the adviser nor any controlling person of the adviser ''directly or indirectly receives money or other benefit'' in connection with the assignment. Applicants state that they cannot rely on rule 15a–4 because UBS–NY Branch, UBSAM–NY or UBSII, or UBS as their controlling person, may be deemed to receive a benefit in connection with consummation of the Merger.

4. Section 6(c) provides that the SEC may exempt any person, security, or transaction from any provision of the Act, if and to the extent that such exemption is necessary or appropriate in the public interest and consistent with the protection of investors and the purposes fairly intended by the policy and provisions of the Act. Applicants assert that the requested relief meets this standard.

5. Applicants submit that the terms and timing of the Merger were determined by UBS and SBC in response to a number of factors beyond the scope of the Act and substantially unrelated to the Funds. Applicants state that there is insufficient time to obtain shareholder approval of the New Advisory Agreements before the Closing Date. Applicants assert that the requested relief would permit continuity of investment management of the Funds, without interruption, during the period following consummation of the Merger.

6. UBS represents that the Funds will receive the same scope and quality of investment advisory services during the Interim Period. The relevant Adviser will render investment advisory services to the Funds under the New Advisory Agreements, which will be the same as the Existing Advisory Agreements, except for the dates of execution and termination. Applicants assert that during the Interim Period, investment advisory services will be provided by investment management personnel with the same or comparable skills, experience and responsibilities, in the same manner and at the same fee levels. Applicants state that, in the event of any material change in personnel, the relevant Adviser will apprise and consult the Boards to assure that the Boards, including a majority of the non-interested directors, are satisfied that the services provided by the Adviser will not be diminished in scope or quality.

7. Applicants note that the fees payable to the Advisers during the Interim Period under the New Advisory Agreements will be at the same rate as the fees currently payable by each Fund under the Existing Advisory Agreements and have been approved by the appropriate Fund's Board and respective shareholders. Applicants also state that the fees will not be released to the Adviser by the Escrow Agent without an appropriate certification that the New Advisory Agreements have been approved by the Fund's respective shareholders.

Applicants' Conditions

Applicants agree that any order of the SEC granting the requested relief will be subject to the following conditions:

1. The New Advisory Agreements will contain the same terms and conditions as the Existing Advisory Agreements, except for the dates of execution and termination.

2. The portion of the investment advisory fees earned by an Adviser during the Interim Period will be maintained in an interest-bearing escrow account, and amounts in the account (including interest earned on such amounts) will be paid (a) to the Adviser only upon approval of each New Advisory Agreement by the applicable Fund's shareholders, or (b) in the absence of shareholder approval prior to the expiration of the Interim Period, to the Fund.

3. Each Fund will promptly schedule a meeting of shareholders to vote on approval of the New Advisory Agreements to be held within 150 days following the commencement of the Interim Period (but in no event after December 31, 1998).

4. UBS, UBSAM–NY and UBSII will pay the costs of preparing and filing the application, and the costs relating to the solicitation of approval of Fund shareholders of the New Advisory Agreements necessitated by the Merger.

5. UBS will take all appropriate actions to ensure that the scope and quality of investment advisory and other services provided to the Funds by the Advisers during the Interim Period will be at least equivalent, in the judgment of the Boards, including a majority of the non-interested Board members, to the scope and quality of services currently provided by the Adviser. In the event of any material change in the personnel providing services pursuant to the New Advisory Agreements, the Adviser will apprise and consult with the Boards to ensure that the Boards, including a majority of the non-interested Board members, are satisfied that the services provided will not be diminished in scope or quality.

For the SEC, by the Division of Investment Management, under delegated authority.

Margaret H. McFarland,

Deputy Secretary.

[FR Doc. 98–13957 Filed 5–26–98; 8:45 am]

BILLING CODE 8010–01–M

SECURITIES AND EXCHANGE COMMISSION

[Release No. 34–40005; File No. SR–NASD–98–18]

Self-Regulatory Organizations; National Association of Securities Dealers, Inc.; Notice of Extension of Comment Period for Proposal Relating to Qualified Immunity in Arbitration Proceedings for Statements Made on Forms U–4 and U–5

May 19, 1998.

On April 21, 1998, the NASD Regulations, Inc. (''NASD Regulation'') filed a proposed rule change with the Securities and Exchange Commission (''SEC'' or ''Commission'') pursuant to Section 19(b)(1) of the Securities Exchange Act of 1934.[1] NASD Regulation proposes to provide members of the NASD with qualified immunity in arbitration proceedings for statements made in good faith in certain disclosures filed with the NASD on Forms U–4 and U–5, the uniform registration and termination notices for registered persons.

Notice of the proposed rule change was provided by the issuance of Securities Exchange Act Release No. 39892 (April 21, 1998) and by publication in the **Federal Register** on April 28, 1998 (63 FR 23321). The Commission has received requests for an extension of time for public comment

[1] 15 U.S.C. 78s(b)(1).

on the proposed rule change.[2] The Commission hereby extends the period for public comment on the proposed rule change until June 19, 1998.

For the Commission, by the Division of Market Regulation, pursuant to delegated authority.[3]

[FR Doc. 98–13955 Filed 5–26–98; 8:45 am]

BILLING CODE 8010–01–M

UNITED STATES SENTENCING COMMISSION

Sentencing Guidelines for the United States Courts

AGENCY: United States Sentencing Commission.

ACTION: Notice of preliminary priority areas for Commission study. Request for public comment.

SUMMARY: As part of its statutory authority and responsibility to analyze sentencing issues, including operation of the federal sentencing guidelines, and in accordance with Rules 3.5 and 5.2 of its Rules of Practice and Procedure, the Commission has preliminarily identified certain priorities as the principal focus of its policy development work in the coming year. The Commission invites comment on these tentatively identified priority areas and on any other sentencing issues that it should address during the coming year. The Commission has tentatively scheduled a hearing to receive public comment on these matters.

DATES: A hearing to receive public comment on future policy development priorities has been set for June 17, 1998, in the Commission's offices. Public comment and written testimony for the public hearing should be received on or before June 11, 1998.

ADDRESSES: Send comments to: United States Sentencing Commission, One Columbus Circle, NE, Suite 2–500 South, Washington, DC 20002–8002, Attention: Public Information-Priorities Comment. For Further Information Contact: Michael Courlander, Public Affairs Officer, at (202) 273–7731.

SUPPLEMENTARY INFORMATION: Policy development priorities preliminarily identified by the Commission for continuing work during the 1998–1999 amendment cycle are:

1. Revisions of the fraud, theft, and tax guidelines (including the monetary tables used in these guidelines and other guidelines that reference those tables, consolidation of the theft, fraud, and property destruction guidelines, and the definition of ''loss'' in the theft and fraud guidelines).

2. Review and assessment of the criminal history guidelines.

3. Review and assessment of the guidelines and sentences imposed for homicide offenses.

In addition, the Commission expects to address recent legislative enactments, such as: (1) the Wireless Telephone Protection Act, relating to cloning cellular telephones; (2) the No Electronic Theft Act; (3) and any other legislation affecting sentencing policy that may be enacted in the remainder of this congressional session.

Obviously, the subject matter, scope, and duration of the Commission's policy development work during the coming year will be influenced considerably by the appointment of new commissioners and the timing of those appointments. Thus, at this time, the Commission has tentatively identified only a few areas in which its work is ongoing.

The Commission invites comment on whether and how it should further investigate these tentative priorities. Additionally, the Commission invites comment on any other sentencing issues that persons believe should be addressed in the coming year, including research issues that the Commission should address. To the extent practicable, comments submitted on additional issues should include the following: (1) a statement of the issue, including the scope and manner of study, particular problem areas and possible solutions, and any other matters relevant to an identified or proposed priority; (2) citations to applicable sentencing guidelines, statutes, case law, and constitutional provisions; and (3) a direct and concise statement of why the Commission should make the issue a priority.

Authority: 28 U.S.C. 994(a), (o).

Richard P. Conaboy,

Chairman.

[FR Doc. 98–13947 Filed 5–26–98; 8:45 am]

BILLING CODE 2211–01–P

SOCIAL SECURITY ADMINISTRATION

Information Collection Activities: Proposed Collection Requests and Comment Requests

This notice lists information collection packages that will require submission to the Office of Management and Budget (OMB), as well as information collection packages submitted to OMB for clearance, in compliance with Pub. L. 104–13 effective October 1, 1995, The Paperwork Reduction Act of 1995.

I. The information collection(s) listed below require(s) extension(s) of the current OMB approval(s) or are proposed new collection(s):

1. Medical Report (General)—0960–0052. The information on Form SSA–3826 is used by the Social Security Administration (SSA) to determine the claimant's physical status prior to making a disability determination and to document disability claims folders with the medical evidence. The respondents are physicians, hospitals, directors and medical records librarians.

Number of Respondents: 750,000.

Frequency of Response: 1.

Average Burden Per Response: 30 minutes.

Estimated Annual Burden: 375,000 hours.

2. Payment of Certain Travel Expenses—0960–0434. SSA uses the information required by 20 CFR, sections 404.999(d) and 416.1499 to reimburse a claimant who has been required to travel over 75 miles to appear at a medical examination or a disability hearing. The respondents are claimants who travel more than 75 miles in order to attend a medical examination or a disability hearing.

Number of Respondents: 50,000.

Frequency of Response: 1.

Average Burden Per Response: 10 minutes.

Estimated Annual Burden: 8,333 hours.

3. Social Security Request for Information—0960–0531. The information on Form SSA–6231 is used by SSA to complete or to clarify data on Forms SSA–623 or SSA–6230, previously provided by representative payees. The respondents are representative payees who furnished incomplete or unclear information.

Number of Respondents: 100,000.

Frequency of Response: 1.

Average Burden Per Response: 15 minutes.

Estimated Annual Burden: 25,000 hours.

4. Statement Regarding Student's Attendance—0960–0113. The information on Form SSA–2434 is used to determine student entitlement status for the children of coal miners, the children of their widows or the brothers of deceased coal miners eligible for black lung benefits. The respondents are dependents of deceased coal miners as cited above, who are attending school and about to attain age 18.

[2] By letter dated May 15, 1998 NASD Regulation has consented to an extension of the comment period. *See* letter from Jean I. Feeney, NASD Regulation, Inc., to Katherine A. England, Assistant Director, Division of Market Regulation, Commission.

[3] 17 CFR 200.30–3)a)(12).

Number of Respondents: 50.

Frequency of Response: 1.

Average Burden Per Response: 10 minutes.

Estimated Annual Burden: 8 hours.

5. Request for the Correction of Earning Records— 0960–0029. Form SSA–7008 is used by individual wage earners to request SSA for review, and if necessary, correction of the Agency's master record of their earnings. The respondents are individuals who question SSA's record of their earnings.

Number of Respondents: 375,000.

Frequency of Response: 1.

Average Burden Per Response: 10 minutes.

Estimated Annual Burden: 62,500 hours.

6. Plan for Achieving Self Support—0960–0559. The information on form SSA–545 is collected by SSA when a Supplemental Security Income (SSI) applicant/recipient desires to use available income and resources to obtain education and/or training in order to become self-supportive. The information is used to evaluate the recipient's plan for achieving self-support to determine whether the plan may be approved under the provisions of the SSI program. The respondents are SSI applicants/recipients who are blind or disabled.

Number of Responses: 7,000.

Frequency of Response: Varies per individual.

Average Burden Per Response: 2 hours.

Estimated Annual Burden: 14,000 hours.

Written comments and recommendations regarding the information collection(s) should be sent within 60 days from the date of this publication, directly to the SSA Reports Clearance Officer at the following address: Social Security Administration, DCFAM, *Attn:* Nicholas E. Tagliareni, 6401 Security Blvd., 1–A–21 Operations Bldg., Baltimore, MD 21235.

In addition to your comments on the accuracy of the agency's burden estimate, we are soliciting comments on the need for the information; its practical utility; ways to enhance its quality, utility and clarity; and on ways to minimize burden on respondents, including the use of automated collection techniques or other forms of information technology.

II. The information collection(s) listed below have been submitted to OMB:

1. Statement of Agricultural Employer (Years prior to 1988); Statement of Agricultural Employer (1988 and Later)—0960–0036. The information on Forms SSA–1002 and SSA–1003 is used by the Social Security Administration (SSA) to resolve discrepancies when farm workers have alleged that their employers did not report their wages or reported them incorrectly. The respondents are agricultural employers.

	SSA–1002	SSA–1003
Number of Respondents	75,000	50,000.
Frequency of Response	1	1.
Average Burden Per Response	10 minutes	30 minutes.
Estimated Annual Burden	12,500 hrs	25,000 hrs.

2. Beneficiary Recontact Report—0960–0502. The information on Form SSA–1588–OCR–SM is used by SSA to recontact mothers, fathers or children ages 15–17, who receive their benefits directly, to determine if they are still entitled to benefits. The respondents are beneficiaries who are in the ''high risk'' area and, therefore, are most prone to overpayments.

Number of Respondents: 163,000.

Frequency of Response: 1.

Average Burden Per Response: 5 minutes.

Estimated Annual Burden: 13,583 hours.

3. Information About Joint Checking/Savings Account—0960–0461. The information collected on Form SSA–2574 is used by SSA to determine whether a joint bank account should be counted as a resource of a Supplemental Security Income (SSI) claimant or applicant in determining eligibility for SSI. The respondents are applicants for and recipients of SSI payments and individuals who are joint owners of financial accounts with SSI applicants/recipients.

Number of Respondents: 200,000.

Frequency of Response: 1.

Average Burden Per Response: 7 minutes.

Estimated Annual Burden: 23,333 hours.

4. Agency/Employer GPO Questionnaire—0960–0470. The information on Form SSA–4163 is used by SSA to determine the need for and the amount of any offset of benefits for certain individuals receiving Government pensions and receiving or applying for Social Security benefits. The respondents are State governments or their political subdivisions.

Number of Respondents: 1,000.

Frequency of Response: 1.

Average Burden Per Response: 3 minutes.

Estimated Annual Burden: 50 hours.

5. Authorization for the Social Security Administration to Obtain Records from a Financial Institution and Request for Records—0960–0293. The information on Form SSA–4641 is used by SSA to determine whether an applicant meets the resource eligibility requirements for SSI and Aid to Families with Dependent Children (AFDC). This information is only used as part of the quality review of the AFDC program. The respondents are financial institutions.

Number of Respondents: 500,000.

Frequency of Response: 1.

Average Burden Per Response: 6 minutes.

Estimated Annual Burden: 50,000 hours.

6. Statement of Household Expenses and Contributions—0960–0456. The information on Form SSA–8011–F3 is used by SSA to obtain or corroborate contributions made by the claimant/recipient toward household expenses. SSA uses the information to correctly determine the amount of unearned income received by the claimant/recipient in order to determine the individual's eligibility and payment amount under the SSI program. The respondents are household members of SSI claimants/recipients.

Number of Respondents: 400,000.

Frequency of Response: 1.

Average Burden Per Response: 15 minutes.

Estimated Annual Burden: 100,000 hours.

Written comments and recommendations regarding the information collection(s) should be directed within 30 days to the OMB Desk Officer and SSA Reports Clearance Officer at the following addresses:

(OMB) Office of Management and Budget, OIRA, Attn: Laura Oliven, New Executive Office Building, Room 10230, 725 17th St., NW, Washington, D.C. 20503.

(SSA) Social Security Administration, DCFAM, Attn: Nicholas E. Tagliareni, 1–A–21 Operations Bldg., 6401 Security Blvd., Baltimore, MD 21235.

To receive a copy of any of the forms or clearance packages, call the SSA Reports Clearance Officer on (410) 965–4125 or write to him at the address listed above.

Dated: May 19, 1998.

Nicholas E. Tagliareni,

Reports Clearance Officer, Social Security Administration.

[FR Doc. 98–13964 Filed 5–26–98; 8:45 am]

BILLING CODE 4190–29–P

OFFICE OF THE UNITED STATES TRADE REPRESENTATIVE

[Docket No. 301–106]

Determination Under Section 304 of the Trade Act of 1974: Practices of the Government of India Regarding Patent Protection for Pharmaceuticals and Agricultural Chemicals

AGENCY: Office of the United States Trade Representative.

ACTION: Notice of determination, termination and monitoring.

SUMMARY: The United States Trade Representative (USTR) has determined that certain acts, policies and practices of India violate, or otherwise deny benefits to which the United States is entitled under, the Agreement on Trade-Related Aspects of Intellectual Property Rights (TRIPS Agreement). This determination is based on the report of a dispute settlement panel convened under the auspices of the World Trade Organization (WTO) at the request of the United States, and the report of the WTO Appellate Body reviewing the panel report. The Appellate Body report and the panel report (as modified by the Appellate Body report) were adopted by the WTO Dispute Settlement Body (DSB) on January 16, 1998 (''the WTO reports''). On February 13, 1998, India stated its intention to comply with its WTO obligations with respect to this matter and, on April 22, 1998, stated that it would amend its law no later than April 19, 1999. In light of he foregoing, the USTR will not take action under section 301 of the Trade Act of 1974 (''the Trade Act'') at this time and has terminated this investigation. However, the USTR will monitor India's implementation of the WTO reports, and will take action under section 301(a) of the Trade Act if India does not come into compliance.

EFFECTIVE DATE: May 8, 1998.

ADDRESSES: 600 17th Street, N.W., Washington, D.C. 20508.

FOR FURTHER INFORMATION CONTACT: Claude Burcky, Director of Intellectual Property (202) 395–6864; Geralyn S. Ritter, Assistant General Counsel (202) 395–6800.

SUPPLEMENTARY INFORMATION: On July 2, 1996, the USTR initiated an investigation under section 302(b) of the Trade Act (19 U.S.C. 2412(b)) regarding India's provision of patent protection for pharmaceutical and agricultural chemical products, and requested public comment on the issues raised in the investigation and the determinations to be made under section 304 of the Trade Act. (61 FR 35857 of July 8, 1996). This investigation specifically concerned India's failure to comply with its obligations under Articles 70.8 and 70.9 of the TRIPS Agreement to establish a ''mailbox'' mechanism for filing product patent applications for pharmaceuticals and agricultural chemicals, and to provide a system of exclusive marketing rights for these products. As required under section 303(a) of the Trade Act, the United States held consultations with India under the procedures of the WTO Understanding on Rules and Procedures Governing the Settlement of Disputes (DSU) on July 27, 1996. A dispute settlement panel was established on November 20, 1996.

Pursuant to Section 304(a)(1)(A) of the Trade Act (19 U.S.C. 2414(a)(1)(A)), the USTR must determine in this case whether any act, policy or practice of India violates, or otherwise denies benefits to which the United States is entitled under any trade agreement. If that determination is affirmative, the USTR must take action under section 301 of the Trade Act (19 U.S.C. 2411), subject to the specific direction of the President, if any. However, pursuant to section 301(a)(2)(B), the USTR is not required to take action under section 301 if the USTR finds, *inter alia*, that the foreign country is taking satisfactory measures to grant the rights of the United States under the trade agreement.

Reasons for Determinations

(1) India's Acts, Policies and Practices

The WTO panel in this case released its report on September 5, 1997, and found that India had failed to comply with its obligations under Articles 70.8 and 70.9 of the TRIPS Agreement. India appealed all of the panel's adverse findings. On December 19, 1997, the Appellate Body issued its report confirming all the major panel findings against India, and reversing the panel report on a procedural issue regarding the panel's jurisdiction to consider claims outside its terms of reference. On January 16, 1998, the DSB adopted the Appellate Body and the panel report (as modified by the Appellate Body report). The WTO reports include findings that India has failed to comply with Article 70.8 of the TRIPS Agreement because it has failed to establish a legally secure mailbox system for filing patent applications for pharmaceutical and agricultural chemical products that preserves the novelty and priority of those applications. The WTO reports also include findings that India was obligated as of January 1, 1995, to have established a system for granting exclusive marketing rights for certain products that are the subject of mailbox application, and that India had failed to establish such a system in violation of Article 70.9 of the TRIPS Agreement.

Thus, based on the results of the WTO dispute settlement proceedings, the public comments received and appropriate consultations, the USTR has determined that certain acts, policies and practices of India violate, or otherwise deny benefits to which the United States is entitled under, the TRIPS Agreement.

(2) U.S. Action

At a meeting of the DSB on February 13, 1998, India stated its intention to ''meet it obligations under the WTO with respect to this matter'' and ''to comply with the recommendations and rulings of the DSB.'' At the DSB meeting on April 22, 1998, India committed to amend its law to meet its TRIPS obligations ''as early as possible,'' and no later than April 19, 1999. In light of India's commitment to implement its WTO obligations, pursuant to section 301(a)(2)(B)(i) of the Trade Act, the USTR will not take action at this time under section 301(a) of the Trade Act and has terminated this investigation. However, pursuant to section 306 of the Trade Act, the USTR will monitor India's implementation of the WTO reports and will take action under section 301(a) of the Trade Act if India does not come into compliance.

Irving A. Williamson,

Chairman, Section 301 Committee.

[FR Doc. 98–13977 Filed 5–26–98; 8:45 am]

BILLING CODE 3190–01–M

DEPARTMENT OF TRANSPORTATION

Office of the Secretary

Reports, Forms and Recordkeeping Requirements; Agency Information Collection Activity Under OMB Review

AGENCY: Office of the Secretary, DOT.

ACTION: Notice.

SUMMARY: In compliance with the Paperwork Reduction Act of 1995 (44 U.S.C. 3501 *et seq.*), this notice announces that the Information Collection Requests (ICRs) abstracted below have been forwarded to the Office of Management and Budget (OMB) for review and approval. The ICRs describe the nature of the information collections and their expected burden. The **Federal Register** Notice with a 60-day comment period soliciting comments on (1) Fatal Accident Reporting System (FARS) was published on February 19, 1998 [63 FR 8519–8520] and(2) 49 CFR Part 583, Motor Vehicle Content Labeling was published on February 26, 1998 [63 FR 9897] and (3) A Survey of Drivers Experiences and Expectations of Light Vehicle Brake System Performance: ABS vs Non-ABS was published in the **Federal Register** on February 23, 1998 [63 FR 9042].

DATES: Comments must be submitted on or before June 26, 1998.

FOR FURTHER INFORMATION CONTACT: Michael Robinson, NHTSA Information Collection Clearance Officer at (202) 366–9456.

SUPPLEMENTARY INFORMATION:

National Highway Traffic Safety Administration (NHTSA).

(1) Title: Fatal Accident Reporting System (FARS)

OMB Control Number: 2127–0006.

Type of Request: Extension of a currently approved collection.

Affected Public: State, Local or Tribal Government.

Abstract: Under both the Highway Safety Act of 1966 and the National Traffic and Motor Vehicle Safety Act of 1966, Traffic Safety Administration (NHTSA) has the responsibility to collect accident data that support the establishment and enforcement of motor vehicle regulations and highway safety programs. These regulations and programs are developed to reduce the severity of injury and the property damage associated with motor vehicle accidents. The Fatal Accident Reporting System (FARS) is in its twenty-third year of operation as a major system that acquires national fatality information directly from existing State files and documents. Since FARS is an on-going data acquisition system, reviews are conducted yearly to determine whether the data acquired are responsive to the total user population needs. The total user population includes Federal and State agencies and the private sector. Two data items, Death Certificate Number and Fatal Injury At Work, are not recorded on any FARS form but are electronically transmitted to the central FARS file.

Estimated Annual Burden: 77,400 hours.

(2) Title: 49 CFR 583 Automobile Parts Content Labeling

OMB Control Number: 2127–0573.

Type of Request: Extension of currently approved collection.

Affected Public: Individuals or households.

Abstract: The American Automobile Labeling Act (AALA) or Section 210 of the Motor Vehicle Information and Cost Savings Act mandates this information collection. The Act requires all new passenger motor vehicles (including passenger cars, certain small buses, all trucks and multipurpose passenger vehicles with a gross vehicle weight rating of 8,500 pounds or Less), beginning on October 1, 1994, to bear labels providing information about the domestic and foreign content of their equipment. The following information must appear on the label:

(a) The percentage (by Value) of the equipment in the vehicles that originated in the United States and Canada;

(b) Names of the countries, other than the U.S. or Canada, if any, that contributed the two highest Percentages (15 percent or more) to the total value of the equipment that comprises the vehicle and the percentage those countries contributed;

(c) The city, state and country of final assembly of the vehicle;

(d) The country of origin for the transmission of the vehicle (i.e., the country that contributed the greatest percentage to the total value of the equipment in that engine); and

(e) The country of origin for the transmission of the vehicle (i.e., the country that contributed the greatest percentage to the total value of the equipment in the transmission).

The information submitted under this collection provides the justifying rational for labeling content affixation to each new passenger motor.

Estimated Annual Burden: 7080 hours.

(3) Title: A Survey of Drivers Experiences and Expectations of Light Vehicle Brake System Performance: ABS vs Non-ABS

OMB Clearance Number: 2127–0594.

Type of Request: New collection.

Affected Public: Individuals, households.

Abstract: Data collection will be accomplished through the use of Computer Assisted Telephone Interviewing (CATI). The CATI system allows a computer to perform a number of functions prone to error when done manually by interviewers, including:

A. Providing correct question sequence;

B. Automatically executing skip patterns based on responses to prior questions (which decreases overall interview time and consequentially the burden on respondents);

C. Recalling answers to prior questions and displaying the information in the test of later questions;

D. Providing random rotation of specified questions or response categories (to avoid bias);

E. Ensuring that questions cannot be skipped; and

F. Rejecting invalid responses or data entries.

The CATI system lists questions and corresponding response categories automatically on the screen, eliminating the need for interviewers to track slip patterns and flip pages. Moreover, the interviewers enter responses directly from their keyboards, and the information is automatically recorded in the computer's memory.

The CATI system includes safeguards to reduce interviewer error in direct key-entry of survey responses. It has a double check method to eliminate the problem of key entry error as a result of accidentally hitting the wrong key. Unlike some systems, when the interviewer enters the code for the respondent reply, the code is not immediately accepted and the interview moved to the next screen. Rather, the screen remains on the question and response categories for the item, and the code and category entered by the interviewer are displayed at the bottom of the screen. The interviewer must confirm the initial entry before it is accepted by the computer as final. If, despite these safeguards, the wrong answer is entered or a respondent changes his/her reply, the interviewer can correct the entry before moving on to the next question.

Description of the need for the information and proposed use of the information: Antilock brake systems (ABS) have been increasingly prevalent on passenger car and light trucks in recent years. Brake experts anticipated that the introduction of ABS on these vehicles would reduce the number and severity of crashes. A number of statistical analyses of crash databases have been performed over the past three years, and suggest that the introduction of ABS does not appear to have reduced the number of automobile crashes where they were expected to be effective. Included in these analyses is a

significant increase of single-vehicle, run-off-road crashes for vehicles equipped with ABS as compared to cars without ABS. It is unknown to what extent, if any, this increase is due to incorrect driver usage of ABS, incorrect driver responses to their ABS, or unrealistic driver expectations of an ABS braking ability.

Estimate of Total Annual Burden: 1375 hours.

Address: Send comments, within 30 days, to the Office of Information and Regulatory Affairs, Office of Management and Budget, 725–17th Street, NW., Washington, DC 20503, Attention DOT Desk Officer. Comments are invited on: whether the proposed collection of information is necessary for the proper performance of the functions of the Department, including whether the information will have practical utility; the accuracy of the Department's estimate of the burden of the proposed information collection; ways to enhance the quality, utility and clarity of the information to be collected; and ways to minimize the burden of the collection of information on respondents, including the use of automated collection techniques or other forms of information technology.

A comment to OMB is best assured of having its full effect if OMB receives it within 30 days of publication.

Issued in Washington, DC, on May 21, 1998.

Vanester M. Williams,

Clearance Officer, United States Department of Transportation.

[FR Doc. 98–13982 Filed 5–26–98; 8:45 am]

BILLING CODE 4910–62–P

DEPARTMENT OF TRANSPORTATION

Federal Aviation Administration

Notice of Opportunity To Participate, Criteria Requirements and Change of Application Procedure for Participation in the Fiscal Year 1998 Military Airport Program (MAP)

AGENCY: Federal Aviation Administration (FAA), Department of Transportation (DOT).

ACTION: Notice of criteria for application and designation, redesignation, or continued participation, in the Fiscal Year 1998 Military Airport Program (MAP).

SUMMARY: This notice announces the criteria, application procedures and schedule to be applied by the Secretary of Transportation in designating, redesignating, and funding capital development for up to 12 airports in the 1998 MAP.

The 1998 MAP allows the Secretary to consider current or former military airports: (1) that were realigned or closed under Base Realignment and Closure (BRAC) procedures or 10 USC 2687 (property normally reported to the General Services Administration for disposal); or (2) current or former military airports at which grants would reduce delays at airports that have 20,000 hours of annual delay in passenger aircraft takeoffs and landings; or (3) at current or former military airports which grants would enhance airport and air traffic control system capacity in a metropolitan area.

DATES: Airport sponsors should address written applications for designation, redesignation, or continued participation, in the fiscal year 1998 Military Airport Program to the Federal Aviation Administration Regional Airports Division or Airports District Office that serves the airport. Applications must be received by that office of the FAA on or before June 26, 1998.

ADDRESSES: Send an original and two copies of Standard Form 424, ''Application for Federal Assistance,'' and supporting and justifying documentation, specifically requesting to be considered for designation, redesignation to participate, or continue, in the fiscal year 1998 Military Airport Program, to the Regional FAA Airports Division or Airports District Office that serves the airport.

FOR FURTHER INFORMATION CONTACT: Mr. James V. Mottley or Leonard C. Sandelli, Military Airport Program Branch (APP–420), Office of Airport Planning and Programming, Federal Aviation Administration (FAA), 800 Independence Avenue, SW, Washington, DC 20591, (202) 267–8780, or (202) 267–8785, respectively.

SUPPLEMENTARY INFORMATION:

General Description of the Program

The Military Airport Program provides assistance to current or former military airports in converting them to civil use, thereby contributing to the capacity of the national air transportation system and/or reducing congestion. Airports designated under the program may obtain funds from a set-aside of four percent of Airport Improvement Program (AIP) discretionary funds to undertake eligible airport development, including certain types of projects not otherwise eligible for AIP assistance.

Number of Airports

A maximum of 12 airports can participate in the 1998 MAP. There are eight airports currently designated and the Secretary can designate up to four more. The current participating airports are: Millington Municipal Airport, Millington, Tennessee; Myrtle Beach International Airport, Myrtle Beach, South Carolina; Williams Gateway Airport, Chandler, Arizona; Austin Bergstrom International Airport, Austin, Texas; Homestead Regional Airport, Homestead, Florida; Rickenbacker Airport, Columbus, Ohio; San Bernardino International Airport, San Bernardino, California; Saywer Airport, Marquette, Michigan; and Alexandria International Airport, Alexandria, Louisana.

Amount of MAP funds

The Secretary of Transportation shall allocate at least 4.0 percent of the Discretionary Airport Improvement Program grant funds available to airports designated under the 1998 MAP. However, for FY 1998 the amount is limited to $26,000,000.

Term of Designation

Five years is the maximum period of eligibility for any airport to participate in the MAP unless an airport sponsor reapplies and is redesignated for another five year period.

Reapplication

Section 124 of the Federal Aviation Reauthorization Act of 1996 permits previously designated airports to apply for an additional five-year period. The airport must have satisfactory MAP eligible projects and must continue to satisfy the designation criteria for the MAP.

Eligible Projects

In addition to other eligible AIP projects, terminals, fuel farms and utility systems and surface parking lots and hangars are eligible to be funded from the MAP.

New Designation and Redesignation Considerations

In making designations of new candidate airports, the Secretary of Transportation will consider the following general requirements:

1. The airport is a Base Realignment and Closure Commission (BRAC) or 10 USC 2687 closure or realignment, classified as a commercial service or reliever airport in the National Plan of Integrated Airport Systems (NPIAS); or

2. The airport and grants issued for projects at the airport would reduce delays at an airport with more than

20,000 hours of annual delays in commercial passenger aircraft takeoffs and landings. Airports with 20,000 or more hours of delay and their associated metropolitan areas are identified in the FAA's Aviation Capacity Enhancement Plan DOT/FAA, Office of System Capacity, 1997 Aviation Capacity Enhancement Plan; or

3. The airport would enhance airport and air traffic control system capacity in a metropolitan area or reduce current or projected flight delays.

The application will be evaluated on how the proposed airport and associated projects would make these contributions to conversion and congestion relief and/or how the airport would enhance air traffic or airport system capacity.

Project Evaluation

The FAA will evaluate the need for the projects in the candidate airport's five year Capital Improvement Plan (CIP), and whether these projects are related to conversion or capacity of that airport or the airport and/or air traffic system. It is the intent of the Secretary of Transportation to fund those airports that have the greatest conversion needs and/or where the benefits to the capacity of the air traffic control or airport system can be maximized, and/or the contribution to reducing congestion can be maximized. Generally, the recently approved BRAC or Title 10 Section 2678 closing or realigned bases or active bases with new joint use agreements will be the locations with the greatest conversion needs.

1. The FAA will evaluate the candidate airports and/or the airports such candidates would relieve based on the following factors:

- Compatibility of airport roles;
- The capability of the candidate airport and its airside and landside complex to serve aircraft that otherwise must use the relieved airport;
- Landside surface access;
- Airport operational capability, including peak hour and annual throughput capacities of the candidate airport;
- Potential of other metropolitan area airports to relieve the congested airport;
- Ability to satisfy or meet air cargo demand within the metropolitan area;
- Forecasted aircraft and passenger levels, type of air carrier service anticipated, i.e., scheduled and/or charter air carrier service;
- Type of aircraft projected to serve the airport and level of operation at the relieved airport and the candidate airport;
- The potential for the candidate airport to be served by aircraft or users, including the airlines, serving the congested airport;
- Ability to replace an existing commercial service or reliever airport serving the area; and
- Any other documentation to support the FAA designation of the candidate airport.

2. The FAA will evaluate the conversion and capacity related needs which, if funded would make the airport a more viable civil airport.

This procedure conforms with FAA procedures for administering the Airport Improvement Program (AIP), the requirements of 49 U.S.C. 47118, as amended by Section 116 of Public Law 103–305 (August 23, 1994), and the Federal Aviation Reauthorization Act of 1996.

Application Procedures

Airport sponsors applying for consideration for inclusion (''candidate airports'' or ''Redesignation'') or continuation in the MAP (''current airports applying for continuation'') must complete a Standard Form 424, ''Application for Federal Assistance,'' and submit documentation to the appropriate FAA office as outlined below. Each sponsor must specifically state in the Standard Form 424, or in its transmittal, that the airport is: (1) applying in response to this notice for consideration as a new candidate for the MAP; (2) if designated in 1994 or thereafter, that the airport is applying as a continuing participant in the MAP; or (3) applying for redesignation. The additional information and data required to support the MAP criteria must be attached to the Application.

Application Procedures and Required Documentation

New Candidate Airports and Airports Applying for Redesignation for Another Five-Year Term

Submit an Application for Federal Assistance, Standard Form 424, along with the documentation and justification indicated below to request designation by the Secretary of Transportation to participate in the Military Airport Program. This should identify the airport as either a current or former military airport and identify whether it was closed or realigned under Public Law 100–526, Public Law 101–510 (Installations Approved for Closure by the Defense Base Realignment and Closure Commissions), 10 U.S.C. 2687 (bases closed by DOD and reported to the General Services Administration) or a joint use of an active military airfield.

A. Qualifications for Additional Candidates

For (1) through (6) below the applicant does not need to resubmit any documentation that has been previously submitted to the regional Airports division or Airports district office. There is no need to submit duplicate information in response to this notice.

(1) Documentation that the airport meets the definition of a ''public airport'' as defined in 49 U.S.C. Section 47102(16).

(2) Documentation that the required environmental review process for civil reuse or joint-use of the military airfield has been completed. (This is not the environmental review for the projects under this program, but the environmental review necessary for title transfer, a long term lease, or a joint use agreement). The environmental reviews and approvals must indicate that the airport would be able to receive grants during the five years in the program.

(3) In the case of a former military airport, documentation that the local or State airport sponsor holds or will hold satisfactory title, a long term lease in furtherance of conveyance of property for airport purposes, or a long term interim lease for 22 years or more, to the property on which the civil airport is being located. The capital development project needs to be in place for 20 years. In the case of a current military airport, documentation that the airport sponsor has an existing joint-use agreement with the military department having jurisdiction over the airport. This is necessary so the FAA can legally issue grants to the sponsor.

(4) Documentation that the service level the airport is expected to provide is a ''commercial service airport'' or a ''reliever airport'' as defined in 49 U.S.C. 47102(7) and 47102(18), respectively, and is included in the current National Plan of Integrated Airport Systems.

(5) Documentation that the airport has an eligible airport ''sponsor'' as defined in 49 U.S.C. 47102(19).

(6) Documentation that the airport has an approved airport layout plan (ALP) and a five year capital improvement plan indicating all eligible grant projects either seeking to be funded from the MAP or other portions of the Airport Improvement Program. The five year plan must also specifically identify the capacity and conversion related projects, associated costs and projected five year schedule of project construction, including those requested for consideration for 1998 MAP funding.

(7) Information identifying the existing and potential levels of visual or

instrument operations and aeronautical activity at the current or former military airport and, if applicable, the relieved airport. Also, if applicable, information on how the airport contributes to air traffic system or airport system capacity. If served by commercial air carriers, the revenue passenger and cargo levels should be provided.

(8) A description of the projected civil role and development needs for transitioning from use as a military airfield to a civil airport, as appropriate, and how development projects would serve to convert the airport to civil use and/or reduce delays at an airport with more than 20,000 hours of annual delay in commercial passenger aircraft takeoffs and landings and/or how the projects would contribute to the airport and air traffic control system capacity in a metropolitan area or reduce current or projected flight delays.

(9) A description of the existing airspace capacity. Describe how anticipated new operations would affect the surrounding airspace and air traffic flow patterns in the metropolitan area in or near which a current or former military airport is located. Include a discussion of the level to which operations at this airport create airspace conflicts that may cause congestion or whether air traffic works into the flow of other air traffic in the area.

(10) A description of the five year capital improvement plan (CIP), including a discussion of major projects, their priorities, projected schedule for project accomplishment, and estimated costs. Capacity related and/or conversion related projects should be specifically identified, especially those that the airport sponsor proposes to fund under the MAP. A copy of the CIP should also be submitted.

(11) A description of projects that are consistent with the role of the airport and effectively contribute to converting the airfield to a civil airport. Projects can be related to various improvement categories depending on the need to convert from military to civil airport use, to meet required civil airport standards, and/or required to provide capacity to the airport and/or airport system. The projects selected, i.e., safety related, conversion-related, and capacity-related, must be identified and fully explained based on the airport's planned use. The sponsor needs to submit the airport layout plan (ALP) and other maps or charts that clearly identify and help clarify the eligible projects and designate them as conversion-related, or capacity-related. It should be cross referenced with the project costs and project descriptions. Projects that could be eligible under MAP if needed for conversion-related or capacity-related purposes include:

Airside

- Modification of airport or military airfield for safety purposes or airport pavements (including widths), marking, lighting or strengthening, and of structures or other features in the airport environs to meet civil standards for airport imaginary surfaces.
- Facilities or support facilities such as passenger terminal gates, aprons for passenger terminals, taxiways to new terminal facilities, aircraft parking, and cargo facilities to accommodate civil use.
- Modification of airport or military utilities (electrical distribution systems, communications lines, water, sewer, drainage) to meet civil standards. Also, modifications that allow civil airport utilities to operate independently if other portions of the base are to parties other than the airport. (This is important where portions of the base are being transferred to an entity different from the airport sponsor.)
- Purchase, rehabilitation, or modification of airport and support facilities, including aircraft rescue and fire fighting buildings and equipment, airport security requirements, lighting vaults, and reconfiguration or relocation of buildings for more efficient civil airport operations, and snow removal equipment.
- Modification of airport or military airfield fuel systems and fuel farms to accommodate civil aviation activities.
- Acquisition of additional land for runway protection zones, other approach protection, or airport development.

Landside

- Construction of surface parking areas and access roads to accommodate automobiles in the airport terminal area and provide an adequate level of access to the airport.
- Construction or relocation of access roads to provide efficient and convenient movement of vehicular traffic to, on and from the airport, including access to passenger, air cargo, fixed base operations, and aircraft maintenance areas.
- Modification or construction of facilities such as passenger terminals, surface automobile parking, hangars, and access to cargo facilities to accommodate civil use.

(12) An evaluation of the ability of surface transportation facilities (road, rail, high speed rail, maritime) to provide intermodal connections.

(13) A description of the type and level of aviation and community interest in the civil use of a current or former military airport.

(14) One copy of the FAA approved ALP for each copy of the application. The ALP or supporting information should clearly show capacity and conversion related projects. Also, other information such as project costs, schedule, project justification, other maps and drawings showing the project locations, and any other supporting documentation that would make the application easier to understand should be included.

Current Airports Applying for Continuation

B. Airports with less than five years in the MAP need to submit the following in order to respond to this notice and remain in the program.

(1) An Application for Federal Assistance, Standard Form 424, along with the documentation and justification indicated below to request participation in the Military Airport Program. Identify the airport as one with less than five years in the MAP applying for continuation.

(2) Identify the existing and potential levels of visual or instrument operations and aeronautical activity at the current or former military airport and the relieved airport if there is any change from the previous information submitted.

(3) Provide a detailed discussion of the projected civil role and continuing development needs for converting a military airfield to a civil airport, and/or how development projects would reduce delays at an airport with more than 20,000 hours of annual delay in commercial passenger aircraft takeoffs and landings, if applicable.

(4) Describe the five year CIP, including a discussion of major projects, their priorities, projected schedule for project accomplishment, and estimated costs, annotated and identified as capacity related, and/or conversion related purposes.

(5) Submit one copy of the FAA approved ALP for each copy of the application. The ALP should clearly show the CIP projects. Also include any other information or drawings that would show and/or clarify the five year plan identifying capacity, and conversion related projects, associated costs, schedule, and project justification.

Airports that have already submitted this information for the 1997 Military Airport Program and have been continued only need to submit updated information and changes in order to continue receiving grants under this program.

Redesignation of Airports Previously Designated and Applying for Another Five-Year Term in the Program

C. Airports applying for another five years in the Military Airport Program need to submit the information required by new candidate airports applying for a new designation. They need to explain in their application why another five-year term is needed to accomplish the conversion to the civil role of the airport.

This notice is issued pursuant to section 49 U.S.C. 47118.

Issued at Washington, DC, on May 20, 1998.

Paul L. Galis,

Director, Office of Airport Planning and Programming.

[FR Doc. 98–13998 Filed 5–26–98; 8:45 am]

BILLING CODE 4910–13–P

DEPARTMENT OF TRANSPORTATION

Federal Aviation Administration

RTCA; Special Committee 189/Eurocae Working Group 53; Air Traffic Services (ATS) Safety and Interoperability Requirements

Pursuant to section 10(a)(2) of the Federal Advisory Committee Act (P.L. 92–463, 5 U.S.C., Appendix 2), notice is hereby given for a joint Special Committee (SC)–189/EUROCAE Working Group (WG)–53 meeting to be held June 15–19, 1998, starting at 9:00 a.m. on June 15. The meeting will be held at Eurocontrol, 96 Rue de la Fusee, Brussels, Belgium (phone +32 2 729 90 11, fax +32 2 729 90 44).

The agenda will be as follows: Monday, June 15: Opening Plenary Session Convenes at 9:00 a.m.: (1) Introductory Remarks; (2) Review and Approval of the Agenda (Monday); (3) Review and Approval of Summary of the Previous Meeting; (4) Sub-Group and Related Reports; (5) Position Papers Planned for Plenary Agreement; (6) SC–189/WG–53 Co-chair Progress Report. Tuesday, June 16–Thursday, June 18: (7) Sub-group Meetings. Friday, June 19: Closing Plenary Session: (8) Introductory Remarks; (9) Review and Approval of Agenda (Friday); (10) Review of Preliminary Meeting Minutes; (11) Sub-group and Related Reports; (12) Position Papers Planned for Plenary Agreement; (13) SC–189/WG–53 Co-chair Progress Report and Wrap-up.

Attendance is open to the interested public but limited to space availability. With the approval of the chairman, members of the public may present oral statements at the meeting.

Persons wishing to present statements or obtain information should contact the RTCA Secretariat, 1140 Connecticut Avenue, NW., Suite 1020, Washington, DC 20036; (202) 833–9339 (phone); (202) 833–9434 (fax); or http://www.rtca.org (web site). Members of the public may present a written statement to the committee at any time.

Issued in Washington, DC, on May 19, 1998.

Janice L. Peters,

Designated Official.

[FR Doc. 98–13997 Filed 5–26–98; 8:45 am]

BILLING CODE 4910–13–M

DEPARTMENT OF TRANSPORTATION

Federal Aviation Administration

Notice of Intent To Rule on Application To Impose and Use the Revenue From a Passenger Facility Charge (PFC) at Manchester Airport

AGENCY: Federal Aviation Administration (FAA), DOT.

ACTION: Notice of intent to rule on application.

SUMMARY: The FAA proposes to rule and invites public comment on the application to impose and use the revenue from a Passenger Facility Charge at Manchester Airport under the provisions of the Aviation Safety and Capacity Expansion Act of 1990 (Title IX of the Omnibus Budget Reconciliation Act of 1990) (Pub. L. 101–508) and Part 158 of the Federal Aviation Regulations (14 CFR Part 158).

DATES: Comments must be received on or before June 26, 1998.

ADDRESSES: Comments on this application may be mailed or delivered in triplicate to the FAA at the following address: Federal Aviation Administration, Airport Division, 12 New England Executive Park, Burlington, Massachusetts 01803.

In addition, one copy of any comments submitted to the FAA must be mailed or delivered to Mr. Alfred Testa, Jr., Airport Director for Manchester Airport at the following address: Manchester Airport, One Airport Road, Suite 300, Manchester, New Hampshire, 03103.

Air carriers and foreign air carriers may submit copies of written comments previously provided to the City of Manchester under section 158.23 of Part 158 of the Federal Aviation Regulations.

FOR FURTHER INFORMATION CONTACT: Priscilla A. Scott, PFC Program Manager, Federal Aviation Administration, Airports Division, 12 New England Executive Park, Burlington, Massachusetts 01803, (781) 238–7614. The application may be reviewed in person at 16 New England Executive Park, Burlington, Massachusetts.

SUPPLEMENTARY INFORMATION: The FAA proposes to rule and invites public comment on the application to impose and use the revenue from a Passenger Facility Charge (PFC) at Manchester Airport under the provisions of the Aviation Safety and Capacity Expansion act of 1990 (Title IX of the Omnibus Budget Reconciliation Act of 1990) (Pub. L. 101–508) and Part 158 of the Federal Aviation Regulations (14 CFR Part 158).

On May 5, 1998, the FAA determined that the application to impose and use the revenue from a PFC submitted by the City of Manchester was substantially complete within the requirements of section 158.25 of Part 158 of the Federal Aviation Regulations. The FAA will approve or disapprove the application, in whole or in part, no later than August 3, 1998.

The following is a brief overview of the use application.

PFC Project#: 98–07–C–00–MHT.

Level of the proposed PFC: $3.00.

Charge effective date: October 1, 1998.

Estimated charge expiration date: October 1, 2016.

Estimated total net PFC revenue: $84,643,00.

Brief description of project: Runway 6/24 System, Construct Two Remote Parking Aprons, Acquire Stead Aviation.

Class or classes of air carriers which the public agency has requested not be required to collect PFCs: Air Taxi/Commercial Operators (ATCO).

Any person may inspect the application in person at the FAA office listed above under **FOR FURTHER INFORMATION CONTACT**.

In addition, any person may, upon request, inspect the application, notice and other documents germane to the application in person at the Manchester Airport, One Airport Road, Suite 300, Manchester, New Hampshire 03103.

Issued in Burlington, Massachusetts on May 13, 1998.

Vincent A. Scarano,

Manager, Airports Division, New England Region.

[FR Doc. 98–13996 Filed 5–26–98; 8:45 am]

BILLING CODE 4910–13–M

DEPARTMENT OF TRANSPORTATION

Federal Highway Administration

Environmental Impact Statement: Gasconade and Montgomery Counties, MO

AGENCY: Federal Highway Administration (FHWA), DOT.

ACTION: Notice of intent.

SUMMARY: The FHWA is issuing this notice to advise the public that an Environmental Impact Statement (EIS) will be prepared for proposed replacement of the Missouri Route 19 bridge and appurtenant roadways/structures over the Missouri River at Hermann in Gasconade and Montgomery Counties, Missouri.

FOR FURTHER INFORMATION CONTACT: Donald Neumann, Programs Engineer, FHWA Division Office, 209 Adams St., Jefferson City, MO 65101, Telephone: (573) 636–7104 or Phil Broyles, District Engineer, Missouri Department of Transportation, P.O. Box 1067, Hannibal, MO 63401, Telephone: (573) 248–2490.

SUPPLEMENTARY INFORMATION: The FHWA, in cooperation with the Missouri Department of Transportation (MoDOT), will prepare an EIS on a proposal to reconstruct the Missouri Route 19 bridge and appurtenant roadways/structures over the Missouri River at Hermann in Gasconade and Montgomery Counties, Missouri. The United States Army Corps of Engineers and the United States Coast Guard are expected to be cooperating agencies on this project.

The study area is roughly bounded by Missouri Route 94 one mile north of the existing bridge, a point two miles south of the bridge, and 1.5 miles east and west of the bridge.

Reconstructing the Missouri Route 19 bridge is being considered to provide a safe and efficient crossing of the Missouri River. The existing bridge, which was constructed in 1922, is considered structurally deficient. It has a sufficiency rating of 18 on a scale of 100. MoDOT considers bridges with sufficiency ratings below 50 as candidates for replacement. Alternatives under consideration include (1) no build; (2) build adjacent to the existing bridge; (3) build a new bridge east or west of the existing structure.

Information describing the proposed action and solicitation for comments will be sent to appropriate federal, state, and local agencies, and to private organizations and citizens who have previously expressed or are known to have interest in this proposal. As part of the scoping process, an interagency coordination meeting will be held. Agencies having an interest in, or jurisdiction regarding the proposed action will be contacted regarding the date and location of the meeting. Public meetings, information centers and advisory committee meetings will be held to solicit public and agency input on the reasonable range of alternatives. In addition, a public hearing will be held to present the findings of the draft EIS (DEIS). Public notice will be given announcing the time and place of the public meetings and hearing. The DEIS will be available for public and agency review and comment prior to the public hearing.

To ensure that the full range of issues related to this proposed action are addressed and all significant issues identified, comments and suggestions are invited from all interested parties. Comments or questions concerning this proposed action and the EIS should be directed to the FHWA or MoDot at the addresses provided above.

(Catalog of Federal Domestic Assistance Program Number 20.205, Highway Planning and Construction. The regulations implementing Executive Order 12373 regarding intergovernmental consultation on Federal programs and activities apply to this program.)

Issued: May 15, 1998.

Donald L. Neumann,

Programs Engineer, Jefferson City.

[FR Doc. 98–13974 Filed 5–26–98; 8:45 am]

BILLING CODE 4910–22–M

DEPARTMENT OF TRANSPORTATION

National Highway Traffic Safety Administration

[Docket No. NHTSA–97–3154]

Cooper Tire & Rubber Company; Grant of Application for Decision of Inconsequential Noncompliance

Cooper Tire & Rubber Company (Cooper) of Findlay, Ohio has determined that some of its tires fail to comply with the labeling requirements of 49 CFR Part 574 ''Tire Identification and Recordkeeping,'' and has filed an appropriate report pursuant to 49 CFR Part 573, ''Defect and Noncompliance Reports.'' Cooper has also applied to be exempted from the notification and remedy requirements of 49 U.S.C. Chapter 301—''Motor Vehicle Safety'' on the basis that the noncompliance is inconsequential to motor vehicle safety.

Although the applicant expresses noncompliance with Part 574, NHTSA considers this to be a noncompliance with Federal Motor Vehicle Safety Standard (FMVSS) No. 119, New pneumatic tires for vehicles other than passenger cars. Paragraph S6.5(b) of FMVSS No. 119 requires each tire to be marked with a ''tire identification number'' required by Part 574 of this chapter. If a tire lacks this number, it fails to comply with FMVSS No. 119 and is subject to notification and remedy.

Notice of receipt of the application was published, with a 30-day comment period, on December 17, 1997, in the **Federal Register** (62 FR 66176). NHTSA received no comments on this application during the 30-day comment period.

In § 574.5(d) Fourth Grouping, the manufacturer is required to identify the week and year of manufacture of tires using three symbols. The first two symbols identify the week of the year using ''01'' for the first full calendar week in each year. The third symbol identifies the year. The purpose of this information is to facilitate the notification of dealers, distributors, and purchasers regarding defective or non-conforming tires, pursuant to Sections 30118 and 30119 of Title 49, United States Code, so that the appropriate remedial action can be taken in the interest of public safety.

During the thirty-second week of 1997, Cooper produced and inadvertently shipped twenty-eight (28) tires without the date code. This occurred after the tires originally were labeled with the correct date code upside-down; Cooper removed the improperly oriented date code by buffing. The tires were then inadvertently shipped with only the identification of ''DOT UPOP''—where ''UP'' is the identification code for Cooper's Findlay plant and ''OP'' is the identification of the tire size. The subject tires are Cooper SRM Radial LT 215/85R16, Load Range D.

Cooper supports its application for inconsequential noncompliance with the following:

> ''The incomplete DOT identification code on each tire does not present a safety-related defect.''
>
> ''The involved tires are capable of being registered with UPOP. They have a unique DOT identification which would permit Cooper to notify the purchasers of these tires, if properly registered, should they be recalled for other reasons.''
>
> ''The involved tires produced from this mold during the aforementioned production period comply with all other requirements of 49 CFR 571.119 and 574.5.''

The agency has reviewed Cooper's application and believes this labeling noncompliance is inconsequential to motor vehicle safety. This mislabeling

involves an inadvertently omitted date code containing the week and year of manufacture designation.

The agency believes that in the case of a tire mislabeling noncompliance, such as this, the true measure of its inconsequentiality to motor vehicle safety is, if the tires were to be recalled for a performance-related noncompliance, that was consequential to safety, whether the mislabeling would affect the manufacturers's ability to locate them. Cooper states that in the event of recall, the non-complying tires have a unique DOT identification (i.e., the lack of a date code) that would allow Cooper to notify the purchasers, if the tires have been properly registered by the retailer or the purchaser. Therefore, if the need arises, identifying the subject tires for any future recalls should not present a problem.

In consideration of the foregoing, NHTSA has decided that the applicant has met its burden of persuasion that the noncompliance it describes is inconsequential to safety. Accordingly, its application is granted, and the applicant is exempted from providing the notification of the noncompliance that is required by 49 U.S.C. 30118, and from remedying the noncompliance, as required by 49 U.S.C. 30120.

(49 U.S.C. 30118, 30120; delegations of authority at 49 CFR 1.50 and 501.8)

Issued on: May 20, 1998.

L. Robert Shelton,

Associate Administrator for Safety Performance Standards.

[FR Doc. 98–14002 Filed 5–26–98; 8:45 am[

BILLING CODE 4910–59–M

DEPARTMENT OF TRANSPORTATION

Surface Transportation Board

[STB Finance Docket No. 33596]

Capital Metropolitan Transportation Authority—Acquisition Exemption—City of Austin, TX

Capital Metropolitan Transportation Authority (Capital Metro),[1] a noncarrier, has filed a notice of exemption under 49 CFR 1150.31 to acquire the City of Austin's Giddings-Llano line, a 162 mile continuous railroad right-of-way (including spurs), extending from SPTC milepost 57.00/AUNW milepost 0, near Giddings, TX, to SPTC milepost 99.04/AUNW milepost 154.07, near Llano, TX, including the Marble Falls Branch from milepost 6.2/AUNW milepost 61.2, near Marble Falls, TX, to SPTC milepost 0.0/AUNW milepost 124.7, near Fairland, TX.[2]

The transaction is expected to be consummated on May 22, 1998.

If the verified notice contains false or misleading information, the exemption is void *ab initio.* Petitions to reopen the proceeding to revoke the exemption under 49 U.S.C. 10502(d) may be filed at any time. The filing of a petition to revoke will not automatically stay the transaction.

An original and 10 copies of all pleadings, referring to STB Finance Docket No. 33596, must be filed with the Surface Transportation Board, Office of the Secretary, Case Control Unit, 1925 K Street, N.W., Washington, DC 20423–0001. In addition, a copy of each pleading must be served on Monica J. Palko, Esq., Bracewell & Patterson, L.L.P., 2000 K Street, N.W., Suite 500, Washington, D.C. 20006.

Board decisions and notices are available on our website at ''WWW.STB.DOT.GOV.''

Decided: May 20, 1998.

By the Board, Joseph H. Dettmar, Acting Director, Office of Proceedings.

Vernon A. Williams,

Secretary.

[FR Doc. 98–13963 Filed 5–26–98; 8:45 am]

BILLING CODE 4915–00–P

[1] Capital Metro is the Austin, TX, regional transit authority, a body corporate and political subdivision of the State of Texas.

[2] Capital Metro states that the line will continue to be operated by the Central of Tennessee Railway & Navigation Company, Inc. d/b/a the Longhorn Railway.

Corrections

Federal Register
Vol. 63, No. 101
Wednesday, May 27, 1998

This section of the FEDERAL REGISTER contains editorial corrections of previously published Presidential, Rule, Proposed Rule, and Notice documents. These corrections are prepared by the Office of the Federal Register. Agency prepared corrections are issued as signed documents and appear in the appropriate document categories elsewhere in the issue.

DEPARTMENT OF AGRICULTURE

Animal and Plant Health Inspection Service

9 CFR Part 130

[Docket No. 94–115–1]

RIN 0579–AA70

Veterinary Diagnostic Services User Fees

Correction

In proposed rule document 98–11776 beginning on page 24473, in the issue of Monday, May 4, 1998, make the following corrections:

§ 130.18 [Corrected]

1. On page 24497, in the second table, in the second column, in the first line, ''$41.502'' should read ''$41.50''. In the third column, in the first line ''ml'' should read ''2 ml''.

2. On the same page, in the second table, in the third column, in the last line ''ml'' should read ''1 ml''.

BILLING CODE 1505-01-D

DEPARTMENT OF DEFENSE

48 CFR Part 252

[Defense Acquisition Circular 91–13]

Defense Federal Acquisition Regulation Supplement; Miscellaneous Amendments

Correction

In rule document 98–5272 beginning on page 11522, in the issue of Monday, March 9, 1998, make the following correction:

252.225–7021 [Corrected]

On page 11545, in the third column, in section 252.225–7021(a)(5)(i), in the second line, after ''country;'' insert ''or (ii) In the case of an article that consists in whole or in part of materials from another country or instrumentality, has been substanially transformed in a designated country''.

BILLING CODE 1505-01-D

DEPARTMENT OF TRANSPORTATION

Coast Guard

33 CFR Part 165

[CGD01–98–015]

RIN 2115–AA97

Safety Zone; Greenwood Lake Powerboat Classic, Greenwood Lake, New Jersey

Correction

In rule document 98–12139 beginning on page 25164, in the issue of Thursday, May 7, 1998, make the following corrections:

1. On page 25164, in the third column, the docket line should read as set forth above.

2. On page 25165, in the first column, under ''**Regulatory History**'' in the first line, ''Purusant'' should read ''Pursuant''.

3. On the same page, in the second column, under ''**Regulatory Evaluation**'' in the 10th line from the bottom, ''of'' should read ''on''.

BILLING CODE 1505-01-D

DEPARTMENT OF TRANSPORTATION

Federal Aviation Administration

14 CFR Parts 91 and 150

[Docket No. 29231]

Compatible Land Use Planning Initiative

Correction

In proposed rule document 98–13577 beginning on page 27876, in the issue of Thursday, May 21, 1998, make the following correction:

On page 27876, in the second column, the docket line is corrected to read as set forth above.

BILLING CODE 1505-01-D

DEPARTMENT OF TRANSPORTATION

Federal Aviation Administration

14 CFR Part 71

[Airspace Docket No. 98-ACE-15]

Proposed Amendment to Class E Airspace; Garden City, KS; Liberal, KS; Fort Dodge, IA; Fort Madison, IA; Columbus, NE; Grand Island, NE

Correction

In proposed rule document 98–8142 beginning on page 15108, in the issue of Monday, March 30, 1998, make the following correction:

On page 15110, in the first column, under the heading **ACE IA E5 Fort Dodge, IA [Revised]**, in the fourth line, ''fee'' should read ''feet''.

BILLING CODE 1505-01-D

federal register

Wednesday
May 27, 1998

Part II

Department of Education

Applications Invitation for New Awards for Fiscal Year 1998; Notices

DEPARTMENT OF EDUCATION

Notice Inviting Applications for New Awards for Fiscal Year 1998

SUMMARY: On June 4, 1997, the President signed into law Pub. L. 105–17, the Individuals with Disabilities Education Act Amendments of 1997, amending the Individuals with Disabilities Education Act (IDEA).

This notice provides closing dates and other information regarding the transmittal of applications for fiscal year 1998 competitions under two programs authorized by IDEA, as amended. The two programs are: (1) Special Education—Personnel Preparation to Improve Services and Results for Children with Disabilities (two priorities); and (2) Special Education—Training and Information for Parents of Children with Disabilities (one priority).

This notice supports the National Education Goals by helping to improve results for children with disabilities.

Waiver of Rulemaking

It is generally the practice of the Secretary to offer interested parties the opportunity to comment on proposed priorities. However, section 661(e)(2) of IDEA makes the Administrative Procedure Act (5 U.S.C. 553) inapplicable to the priorities in this notice. In order to make awards on a timely basis, the Secretary has decided to publish these priorities in final under the authority of section 661(e)(2).

General Requirements

(a) Projects funded under this notice must make positive efforts to employ and advance in employment qualified individuals with disabilities in project activities (see Section 606 of IDEA);

(b) Applicants and grant recipients funded under this notice must involve individuals with disabilities or parents of individuals with disabilities in planning, implementing, and evaluating the projects (see Section 661(f)(1)(A) of IDEA); and

(c) Projects funded under these priorities must budget for a two-day Project Directors' meeting in Washington, D.C. during each year of the project.

Note: The Department of Education is not bound by any estimates in this notice.

Special Education—Personnel Preparation To Improve Services and Results for Children With Disabilities [CFDA 84.325]

Purpose of Program: The purposes of this program are to (1) help address State-identified needs for qualified personnel in special education, related services, early intervention, and regular education, to work with children with disabilities; and (2) to ensure that those personnel have the skills and knowledge, derived from practices that have been determined through research and experience to be successful, that are needed to serve those children.

Eligible Applicants: State and local educational agencies; institutions of higher education; other public agencies; private nonprofit organizations; outlying areas; freely associated States; and Indian tribes or tribal organizations.

Applicable Regulations: (a) The Education Department General Administrative Regulations (EDGAR) in 34 CFR parts 74, 75, 77, 79, 80, 81, 82, 85, and 86; (b) The selection criteria included in regulations in 34 CFR 318.23; and (c) 34 CFR 318.31–318.33.

Note: The regulations in 34 CFR part 86 apply to institutions of higher education only.

Priority: Under section 673 and 34 CFR 75.105(c)(3), the Secretary gives an absolute preference to applications that meet the following priorities. The Secretary funds under this competition only those applications that meet these absolute priorities:

Absolute Priority 1—Projects of National Significance (84.325N)

The Secretary establishes an absolute priority to support projects that address issues of national significance and have broad applicability. Projects supported under this priority must develop, implement, and evaluate innovative models that will serve as blueprints for improving the preparation and ongoing development of early intervention personnel, general and special education teachers, administrators, related service personnel, and paraprofessionals who have responsibility for ensuring that children with disabilities achieve to high standards and become independent, productive citizens.

Priority: A project of national significance must:

(a) Include a detailed description of a personnel preparation model, including descriptions of: the population(s) that the model is designed to serve; the content and expected outcomes of the model; the processes for, and costs involved with, implementation and ongoing evaluation; and the organizational and contextual factors that may either facilitate or impede implementation of the model. The model must—

(1) Be guided by a conceptual framework that integrates all proposed model components; and

(2) Incorporate relevant, research-based curricular content and pedagogical practice;

(b) Provide substantial evidence that the proposed model will serve a broad-based need;

(c) Establish an advisory panel of relevant stakeholders and potential users to provide guidance that will help to assure that the model developed has broad applicability;

(d) Conduct ongoing formative evaluations of project activities, and a final evaluation to assess the success of the model in enhancing the skills, knowledge, and practices of professional personnel that will lead to improved results for children with disabilities;

(e) Produce a model ''blueprint'' or case study that would permit others to replicate the model and includes comprehensive information related to paragraphs (a) and (b), and comprehensive outcomes of the final evaluation required under paragraph (d); and

(f) In addition to the annual two day Project Directors' meeting in Washington, D.C. mentioned in the General Requirements section of this notice, budget for another annual two-day trip to Washington, D.C. to collaborate with the Federal project officer and other projects funded under this priority by sharing information and discussing model development, implementation, evaluation and dissemination issues, including the carrying out of cross-project dissemination activities.

Invitational Priorities

Within this absolute priority, the Secretary is particularly interested in applications that meet one of the following invitational priorities. However, under 34 CFR 75.105(c)(1) an application that meets one or more of these invitational priorities does not receive competitive or absolute preference over other applications:

(a) Projects that improve the ability of school principals and other local educational agency administrators to provide leadership in meeting the needs of children with disabilities through:

(1) Model preservice programs for the training and certification of school administrators (including principals and other instructional leaders) that incorporate relevant special education content and provide for trainees to apply special education knowledge in field-based practice opportunities; or,

(2) Model projects that provide ongoing training for practicing school principals, LEA administrators, local school board members, and other local

decision makers in order to improve the ability of such individuals to make informed instructional and policy-related decisions regarding the provision of appropriate, beneficial services and supports for children with disabilities.

(b) Projects that improve the training of paraprofessionals to meet the needs of children, K through age 21, with high- or low-incidence disabilities, in general education classrooms through:

(1) Model preservice programs for the training and certification of paraprofessionals that incorporate relevant special and regular education content and provide opportunities for trainees to apply their knowledge and skills in field-based practice;

(2) Model inservice programs for current paraprofessionals to improve their knowledge, skills, and practices; or,

(3) Model pre- or inservice programs that incorporate content for teachers to supervise and work more effectively with paraprofessionals.

Project Period: Up to 36 months.

Maximum Award: The Secretary rejects and does not consider an application that proposes a budget exceeding $200,000 for any single budget period of 12 months. The Secretary may change the maximum amount through a notice published in the **Federal Register**.

Page Limits: Part III of the application, the application narrative, is where an applicant addresses the selection criteria that are used by reviewers in evaluating an application. An applicant must limit Part III to the equivalent of no more than 40 double-spaced pages, using the following standards: (1) A ''page'' is 8½″ x 11″ (on one side only) with one-inch margins (top, bottom, and sides). (2) All text in the application narrative, including titles, headings, footnotes, quotations, references, and captions, as well as all text in charts, tables, figures, and graphs, must be double-spaced (no more than 3 lines per vertical inch). If using a proportional computer font, use no smaller than a 12-point font, and an average character density no greater than 18 characters per inch. If using a nonproportional font or a typewriter, do not use more than 12 characters to the inch.

The page limit does not apply to Part I—the cover sheet; Part II—the budget section (including the narrative budget justification); Part IV—the assurances and certifications; or the one-page abstract, resumes, bibliography, and letters of support. However, all of the application narrative must be included in Part III. If an application narrative uses a smaller print size, spacing, or margin that would make the narrative exceed the equivalent of the page limit, the application will not be considered for funding.

Program Authority: Section 673 of the Act.

Absolute Priority 2—Partnerships to Link Personnel Training and School Practice [84.325P]

Background

Teachers need to be prepared to provide effective instruction across the full range of student abilities. More than 90 percent of all students with disabilities spend at least a portion of their school day in a general education classroom. The movement toward inclusive education in today's schools requires that general and special education teachers work together to meet the needs of students with disabilities. However, extensive data indicate that general education teachers do not feel that they have the knowledge and skills necessary to meet the educational needs of these students in their classrooms and that special education teachers are required to assume roles (e.g., consulting with general education teachers, co-teaching in general education classrooms, and supervising paraprofessional staff) for which they are insufficiently prepared.

In order to meet the challenge of preparing general and special education teachers to be effective in addressing the needs, and improving the results, of students with disabilities in inclusive schools, teacher preparation programs must be grounded in the structural, organizational, and instructional realities of schools, while schools must facilitate continuous improvement of teacher knowledge and skills. Institutions that prepare teachers and the schools in which teachers work both have a responsibility to ensure that teachers (special and regular education) can effectively fulfill their roles in working with children with disabilities. Too often the sole relationship between preparation programs and local schools is limited to setting up practicum settings for trainees. Faculty members at Institutions of Higher Education (IHEs) are often minimally involved in practicum supervision. Universities and schools can no longer afford to work in isolation. Similarly, training regular and special education teachers can no longer be viewed as separate functions. The following priority is intended to develop models for building and enhancing partnerships between training institutions and local schools in order to strengthen the quality and effectiveness of preservice preparation programs and ongoing professional development activities for teachers and instructional leaders (both special and regular education) who serve children with disabilities.

The power of the partnerships supported through this priority should not be underestimated. The Secretary expects projects to develop models that intersect between preservice and inservice development for professional personnel and will have a significant impact on the improvement of educational practices that will lead to better results for children. It is intended that these models will provide a means by which local schools and IHEs can simultaneously improve their work and effectiveness.

Priority: The Secretary establishes an absolute priority to support projects that develop, implement, and evaluate innovative models for engaging general education and special education faculty in IHEs and general education and special education teachers and instructional leaders in local schools and districts in a dynamic and enduring partnership to enhance and simultaneously improve the quality of preservice preparation and ongoing professional development of teachers and instructional leaders. Partnership activities must be designed to ensure that both special education and regular education professionals have the knowledge and skills necessary to improve results for children with disabilities.

Projects funded under this priority must:

(a) Develop a partnership model for linking IHE personnel training programs with local school practice that is guided by a conceptual framework incorporating relevant, research-based knowledge and practice. The partnership model must include the following features:

(1) A systematic approach to professional development at all stages of the training continuum by focusing on continuous learning by teachers, instructional leaders, and faculties of IHE education programs;

(2) The integration of theory and practice to produce more practical, contextualized theory and more theoretically grounded, broadly informed practice;

(3) A strong commitment to research-based change that is continually responsive to personnel needs and to advances in the knowledge base; and

(4) A description of the benefits that will accrue to all stakeholders, including, but not limited to, IHE faculty, teachers in training, practicing professionals in local schools, and students with disabilities, as a result of

the implementation of the proposed partnership model.

(b) Provide substantial evidence that the proposed model will serve a broad-based need.

(c) Establish an advisory panel of relevant stakeholders and potential users to provide guidance that will help to assure the model developed has broad applicability.

(d) Include the following partnerships activities:

(1) Identification of a common core of knowledge and skills that are appropriate for all prospective general and special education teachers, are aligned with critical teaching standards and with high student content and performance standards, and for which there is broad based support among all stakeholders;

(2) Clarification of the current and emerging roles and responsibilities of special educators in inclusive schools, including identification of the specialized knowledge and skill competencies that these educators must perform effectively, and for which there is broad based support among all stakeholders;

(3) Modification of curricula and materials used for preservice preparation of general and special education teachers that is consistent with the requirements under paragraph (a) and is conducted through collaboration between IHEs and schools or districts; and

(4) Development of an approach for providing intensive, ongoing professional development that will advance the career-long learning of school and IHE personnel and ensure that children with disabilities achieve to high standards.

(e) Conduct ongoing formative evaluations of project activities, and a final evaluation to assess the success of the partnership model in enhancing the skills, knowledge, and practices of professional personnel that will lead to improved results for children with disabilities.

(f) Develop a plan for sustaining implementation of the model beyond the period of Federal funding for this project.

(g) Produce a model ''blueprint'' or case study that would permit others to replicate or implement the model and includes comprehensive information related to paragraphs (a) through (d) and comprehensive outcomes of the final evaluation required under paragraph (e).

(h) In addition to the annual two day Project Directors' meeting in Washington, DC, mentioned in the General Requirements section of this notice, budget for another annual two-day trip to Washington, DC, to collaborate with the Federal project officer and other projects funded under this priority by sharing information and discussing model development, implementation, and dissemination issues, including the carrying out of cross-project dissemination activities.

Under this priority, the project period is up to 60 months subject to the requirements of 34 CFR 75.253(a) for continuation awards. In determining whether to continue the project for the fourth and fifth years of the project period, the Secretary, in addition to the requirements of 34 CFR 75.253(a), will consider—

(a) The recommendation of a review team consisting of three experts selected by the Secretary. The services of the review team, including a two-day site visit to the project, are to be performed during the last half of the project's second year and may be included in that year's evaluation required under 34 CFR 75.590. Costs associated with the services to be performed by the review team must also be included in the project's budget for year two. These costs are estimated to be approximately $4,000;

(b) The timeliness and effectiveness with which all requirements of the grant have been or are being met by the project; and

(c) The degree to which the project's design and methodology demonstrates the potential for advancing significant new knowledge.

Project Period: Up to 60 months.

Maximum Award: The Secretary rejects and does not consider an application that proposes a budget exceeding $300,000 for any single budget period of 12 months. The Secretary may change the maximum amount through a notice published in the **Federal Register**.

Page Limits: Part III of the application, the application narrative, is where an applicant addresses the selection criteria that are used by reviewers in evaluating an application. An applicant must limit Part III to the equivalent of no more than 50 double-spaced pages, using the following standards: (1) A ''page'' is 8″ x 11″ (on one side only) with one-inch margins (top, bottom, and sides). (2) All text in the application narrative, including titles, headings, footnotes, quotations, references, and captions, as well as all text in charts, tables, figures, and graphs, must be double-spaced (no more than 3 lines per vertical inch). If using a proportional computer font, use no smaller than a 12-point font, and an average character density no greater than 18 characters per inch. If using a nonproportional font or a typewriter, do not use more than 12 characters to the inch.

The page limit does not apply to Part I—the cover sheet; Part II—the budget section (including the narrative budget justification); Part IV—the assurances and certifications; or the one-page abstract, resumes, bibliography, and letters of support. However, all of the application narrative must be included in Part III. If an application narrative uses a smaller print size, spacing, or margin that would make the narrative exceed the equivalent of the page limit, the application will not be considered for funding.

Program Authority: Section 673 of IDEA.

Special Education—Training and Information for Parents of Children With Disabilities [CFDA 84.328C]

Purpose of Program: The purpose of this program is to support local parent organizations to help ensure that underserved parents of children with disabilities, including low-income parents, parents of children with limited English proficiency, and parents with disabilities, have the training and information they need to enable them to participate effectively in helping their children with disabilities.

Eligible Applicants: Local parent organizations must meet the criteria in section 682(g) of the Act, and also must meet one of the following criteria—

(a) Have a board of directors the majority of whom are from the community to be served; or

(b) Have as part of its mission, serving the interests of individuals with disabilities from such community; and have a special governing committee to administer the project, a majority of the members of which are individuals from such community; examples of administrative responsibilities include controlling the use of the project funds, and hiring and managing project personnel.

Applicable Regulations: (a) The Education Department General Administrative Regulations (EDGAR) in 34 CFR parts 74, 75, 77, 79, 80, 81, 82, and 85; and (b) the selection criteria included in 34 CFR 316.22.

Priority: Under sections 661(e)(2) and 683 of the Act, and 34 CFR 75.105(c)(3), the Secretary gives an absolute preference to applications that meet the following priority. The Secretary funds under this competition only those applications that meet this absolute priority:

Absolute Priority—Community Parent Resource Centers (84.029C)

The purpose of this statutory priority is to support local parent training and

information centers that will help ensure that underserved parents of children with disabilities, including low-income parents, parents of children with limited English proficiency, and parents with disabilities, have the training and information they need to enable them to participate effectively in helping their children with disabilities to—

(a) Meet developmental goals and, to the maximum extent possible, those challenging standards that have been established for all children; and

(b) Be prepared to lead productive independent adult lives, to the maximum extent possible.

Each community parent training and information center supported under this priority must—

(a) Provide training and information that meets the training and information needs of parents of children with disabilities proposed to be served by the project;

(b) Assist parents to understand the availability of, and how to effectively use, procedural safeguards under Section 615 of the Act, including encouraging the use, and explaining the benefits, of alternative methods of dispute resolution, such as the mediation process described in the Act;

(c) Serve the parents of infants, toddlers, and children with the full range of disabilities by assisting parents to—

(1) Better understand the nature of their children's disabilities and their educational and developmental needs;

(2) Communicate effectively with personnel responsible for providing special education, early intervention, and related services;

(3) Participate in decision making processes and the development of individualized education programs and individualized family service plans;

(4) Obtain appropriate information about the range of options, programs, services, and resources available to assist children with disabilities and their families;

(5) Understand the provisions of the Act for the education of, and the provision of early intervention services to, children with disabilities; and

(6) Participate in school reform activities;

(d) Contract with the State education agencies, if the State elects to contract with the community parent resource centers, for the purpose of meeting with parents who choose not to use the mediation process, to encourage the use and explain the benefits of mediation, consistent with Sections 615(e)(2)(B) and (D) of the Act;

(e) In order to serve parents and families of children with the full range of disabilities, network with appropriate clearinghouses, including organizations conducting national dissemination activities under section 685(d) of the Act, and with other national, State, and local organizations and agencies, such as protection and advocacy agencies;

(f) Establish cooperative partnerships with the parent training and information centers funded under Section 682 of the Act;

(g) Be designed to meet the specific needs of families who experience significant isolation from available sources of information and support; and

(h) Annually report to the Secretary on—

(1) The number of parents to whom it provided information and training in the most recently concluded fiscal year, and

(2) The effectiveness of strategies used to reach and serve parents, including underserved parents of children with disabilities.

Competitive Priorities: Within this Absolute Priority, the Secretary, under 34 CFR 75.105(c)(2)(i), gives preference to applications that meet one or both of the following competitive priorities:

The Secretary awards 20 points to an application submitted by a local parent organization that has a board of directors, the majority of whom are parents of children with disabilities, from the community to be served. These points are in addition to any points the application earns under the selection criteria for the program.

The Secretary awards 10 points to an application that provides parent training and information in one or more Empowerment Zones or Enterprise Communities in a manner that meets the competitive priority relating to Empowerment Zones or Enterprise Communities published in the **Federal Register** on November 7, 1994 (59 FR 55534). A list of areas that have been selected as Empowerment Zones or Enterprise Communities is included in the application package. These points are in addition to any points the application earns under the selection criteria for the program.

Project Period: Up to 36 months.

Project Award: Projects will not be funded in excess of $100,000 for any single budget period of 12 months.

Program Authority: Section 683 of the Act.

For Applications and General Information Contact: Requests for applications and general information should be addressed to the Grants and Contracts Services Team, 600 Independence Avenue, S.W., room 3317, Switzer Building, Washington, D.C. 20202–2641. The preferred method for requesting information is to FAX your request to: (202) 205–8717. Telephone: (202) 260–9182.

Individuals who use a telecommunications device for the deaf (TDD) may call the TDD number: (202) 205–8953.

Individuals with disabilities may obtain a copy of this notice or the application packages referred to in this notice in an alternate format (e.g. Braille, large print, audiotape, or computer diskette) by contacting the Department as listed above. However, the Department is not able to reproduce in an alternate format the standard forms included in the application package.

Intergovernmental Review

These programs are subject to the requirements of Executive Order 12372 and the regulations in 34 CFR Part 79. The objective of the Executive order is to foster an inter-governmental partnership and a strengthened federalism by relying on processes developed by State and local governments for coordination and review of proposed Federal financial assistance.

In accordance with the order, this document is intended to provide early notification of the Department's specific plans and actions for those program.

INDIVIDUALS WITH DISABILITIES EDUCATION ACT APPLICATION NOTICE FOR FISCAL YEAR 1998

CFDA No. and name	Applications available	Application deadline date	Deadline for intergovernmental review	Maximum award (per year)*	Page limit*	Estimated number of awards
84.325N Professional Development—Projects of National Significance	5/27/98	7/10/98	9/08/98	$200,000	40	15

INDIVIDUALS WITH DISABILITIES EDUCATION ACT APPLICATION NOTICE FOR FISCAL YEAR 1998—Continued

CFDA No. and name	Applications available	Application deadline date	Deadline for intergovernmental review	Maximum award (per year)*	Page limit*	Estimated number of awards
84.325P Professional Development—Partnerships to Link Personnel Training and School Practice	5/27/98	7/10/98	9/08/98	300,000	50	4
84.328C Community Parent Resource Centers	5//27/98	7/17/98	9/15/98	100,000	NONE	10

*The Secretary rejects and does not consider an application that proposes a budget exceeding the amount listed for each priority for any single budget period of 12 months, except 84.328C, Community Parent Resource Centers.

**Applicants must limit the Application Narrative, Part III of the Application, to the page limits noted above. Please refer to the ''Page Limit'' section of this notice for the specific requirements. The Secretary rejects and does not consider an application that does not adhere to this requirement.

Electronic Access to This Document

Anyone may view this document, as well as all other Department of Education documents published in the **Federal Register**, in text or portable document format (pdf) on the World Wide Web at either of the following sites:

http://ocfo.ed.gov/fedreg.htm
http://www.ed.gov/news.html

To use the pdf you must have the Adobe Acrobat Reader Program with Search, which is available free at either of the previous sites. If you have questions about using the pdf, call the U.S. Government Printing Office toll free at 1–888–293–6498.

Anyone may also view these documents in text copy only on an electronic bulletin board of the Department. Telephone: (202) 219–1511 or, toll free, 1–800–222–4922. The documents are located under Option G—Files/Announcements, Bulletins, and Press Releases.

Note: The official version of a document is the document published in the **Federal Register**.

Dated: May 13, 1998.

Judith E. Heumann,

Assistant Secretary for Special Education and Rehabilitative Services.

[FR Doc. 98–13940 Filed 5–26–98; 8:45 am]

BILLING CODE 4000–01–P

federal register

Wednesday
May 27, 1998

Part III

Department of Transportation

Federal Aviation Administration

14 CFR Part 25
Braked Roll Conditions; Final Rule

DEPARTMENT OF TRANSPORTATION

Federal Aviation Administration

14 CFR Part 25

[Docket No. 28643; Amdt. No. 25–97]

RIN 2120–AF83

Braked Roll Conditions

AGENCY: Federal Aviation Administration (FAA), DOT.

ACTION: Final rule.

SUMMARY: This amendment to the airworthiness standards for transport category airplanes adds a new design standard that requires that the airplane be designed to withstand main landing gear maximum braking forces during ground operations. This amendment will ensure that the landing gear and fuselage are capable of withstanding the dynamic loads associated with the maximum dynamic braking condition. It also relieves a burden on industry by eliminating differences between the Federal Aviation Regulations (FAR) and European Joint Aviation Requirements (JAR), while maintaining a level of safety provided by the current regulations and industry practices.

EFFECTIVE DATE: June 26, 1998.

FOR FURTHER INFORMATION CONTACT: Jim Haynes, FAA, Airframe and Airworthiness Branch (ANM–115), Transport Airplane Directorate, Aircraft Certification Service, 1601 Lind Avenue SW., Renton, Washington 98055–4056; telephone (425) 227–2131; facsimile (425) 227–1320.

SUPPLEMENTARY INFORMATION:

Availability of Final Rule

An electronic copy of this document may be downloaded using a modem and suitable communications software from the FAA regulations section of the FedWorld electronic bulletin board service (telephone: 202–512–1661) or the FAA's Aviation Rulemaking Advisory Committee Bulletin Board service (telephone: 800–FAA–ARAC).

Internet users may reach the FAA's web page at http://www.faa.gov or the **Federal Register**'s webpage at http://www.access.gpo.gov/su—docs for access to recently published rulemaking documents.

Any person may obtain a copy of this final rule by submitting a request to the Federal Aviation Administration, Office of Rulemaking, ARM–1, 800 Independence Avenue, SW., Washington, DC 20591, or by calling (202) 267–9680. Communications must identify the amendment number or document number of this final rule.

Persons interested in being placed on the mailing list for future notices of proposed rulemaking and final rules should request from the above office a copy of Advisory Circular (AC) No. 11–2A, Notice of Proposed Rulemaking Distribution System, which describes the application procedure.

Small Entity Inquiries

The Small Business Regulatory Enforcement Fairness Act of 1996 (SBREFA) requires the FAA to report inquiries from small entities concerning information on, and advice about, compliance with statutes and regulations within the FAA's jurisdiction, including interpretation and application of the law to specific sets of facts supplied by a small entity.

The FAA's definitions of small entities may be accessed through the FAA's web page (http://www.faa.gov.avr/arm/sbrefa.htm), by contacting a local FAA official, or by contacting the FAA's Small Entity Contact listed below.

If you are a small entity and have a question, contact your local FAA official. If you do not know how to contact your local FAA official, you may contact Charlene Brown, Program Analyst Staff, Office of Rulemaking, ARM–27, Federal Aviation Administration, 800 Independence Avenue, SW, Washington, DC 20591, 1–888–551–1594. Internet users can find additional information on SBREFA in the ''Quick Jump'' section of the FAA's web page at http://www.faa.gov and may send electronic inquiries to the following internet address: 9–AWA–SBREFA@faa.dot.gov.

Background

This amendment is based on Notice of Proposed Rulemaking (NPRM) 96–10, which was published in the **Federal Register** on August 5, 1996 (61 FR 40710). The notice was based on a need to protect the airframe structure from damage during hard application of the brakes.

The current 14 CFR part 25 airworthiness standards, § 25.493, and its predecessor rule, § 4b.235(b) of the Civil Air Regulations (CAR), prescribe braked roll conditions that the airplane structure and landing gear must be designed to withstand during airplane taxiing with a constant (steady) application of brakes (''braked roll'' condition). The taxi condition is generally the most critical condition regarding nose gear and forward fuselage loading during the braking event, due to the increased braking coefficient of friction at low speeds and the lack of lift on the wings and lack of aerodynamic damping. Both rules treat the braked roll condition as a static equilibrium condition. Neither rule accounts for the dynamic loads on the nose gear and fuselage associated with pitch inertia of the airplane due to rapid application of main landing gear brakes. Adequate strength has been achieved on existing airplanes by application of other part 25 design requirements and by the manufacturers' need to comply with the more stringent British Civil Airworthiness Requirements (BCAR).

For many years the BCAR have included a dynamic braking condition that requires that consideration be given to the maximum likely combination of dynamic vertical reaction and sudden increase in drag load that could occur on the nose gear as a result of sudden main gear braking while encountering obstacles. The BCAR address obstacles such as overruns onto semi-prepared surfaces during rejected takeoffs, running off the edge then back on to the runway during avoidance maneuvers, running over displaced or lowered edges of runway paving, and inadvertent use of runways under repair. In application of the BCAR requirement, it was found that U.S. designed airplanes generally have had adequate strength to meet this condition without requiring any modifications. However, this may not always be the case, especially if new airplane designs are significantly different from past conventional configurations in vertical and longitudinal mass distributions of fuel, payload, engine location, etc. As the takeoff weight increases with respect to landing weight, the dynamic braked roll condition can become more critical for the nose gear and fuselage. This amendment will ensure that all future airplanes will be provided with adequate strength in the fuselage and nose landing gear to carry these loads.

In 1988, the FAA, in cooperation with the JAA and other organizations representing the American and European aerospace industries, began a process to harmonize the airworthiness requirements of the United States and the airworthiness requirements of Europe. The objective was to achieve common requirements for the certification of transport airplanes without a substantive change in the level of safety provided by the regulations. Other airworthiness authorities such as Transport Canada also participated in this process.

In 1992, the harmonization effort was undertaken by the Aviation Rulemaking Advisory Committee (ARAC). A working group of industry and government structural loads specialists of Europe, the United States, and

Canada was chartered by notice in the **Federal Register** (58 FR 13819, March 15, 1993) to harmonize the design loads sections of Subpart C of part 25. The harmonization effort on the braked roll rule was accomplished and a specific proposal was recommended to the FAA by letter dated November 6, 1995. The FAA concurred with the recommendation, and published Notice 96–10 in the **Federal Register** on August 5, 1996, for public comment.

Interested persons have been given an opportunity to participate in this rulemaking and due consideration has been given to all matters presented. Comments received in response to Notice 96–10 are discussed below.

Discussion of Comments

The FAA received three comments in response to Notice 96–10. Two of these commenters support the proposal, one with comment, while the third commenter objects to the proposal.

One commenter, representing the aviation industry, supports the proposal but expresses concern about possible interpretation of the rule. This commenter states that it is industry's belief that the proposed rule represented a harmonized position on both the rule and the interpretative advisory material; specifically, the commenter supports JAA interpretation and advisory material which allows use of a coefficient of friction less than 0.80, when substantiated, in the formula of § 25.493(c). The commenter requests that this interpretation be clarified. The coefficient of friction of 0.80 between the tire and ground surface has been used for structural design of the landing gear and structure since it was codified in the Civil Air Regulations (CAR Part 4b). The FAA has allowed a lower drag reaction in those cases where it can be substantiated that an effective drag force of 0.80 times the vertical reaction cannot be attained under any likely loading condition. This has generally been interpreted to mean that a lower drag force may be used where maximum brake torque is the limiting factor. This allowance is provided in the current regulation and is unchanged by this amendment. A value of 0.80 remains as the value of the coefficient of friction in the regulatory formula of § 25.493(e).

One commenter, an aircraft manufacturer, believes the proposed regulation is unnecessary because the braked roll condition is not the loading condition that determines the design of the nose gear and fuselage. The commenter states that a three point landing is typically the load condition which determines the design of the landing gear structure, which is far more severe than the braked roll conditions addressed in the notice. The FAA agrees that this may be true for most airplane designs; however, it is not always the case. The FAA considers the rule necessary to ensure proper landing gear designs for those airplanes that are affected by the braked roll condition.

In view of the above, part 25 is amended as proposed in Notice 96–10.

Regulatory Evaluation, Regulatory Flexibility Determination, International Trade Impact Assessment, and Unfunded Mandates Assessment

Changes to Federal regulations must undergo several economic analyses. First, Executive Order 12866 directs that each Federal agency shall propose or adopt a regulation only upon a reasoned determination that the benefits of the intended regulation justify its costs. Second, the Regulatory Flexibility Act of 1980 requires agencies to analyze the economic effects of regulatory changes on small entities. Third, the Office of Management and Budget directs agencies to assess the effects of regulatory changes on international trade. Fourth, the Unfunded Mandates Reform Act of 1995 (Pub. L. 104–4) requires agencies to prepare a written assessment of the costs, benefits and other effects of proposed or final rules that include a Federal mandate likely to result in the expenditure by State, local or tribal governments, in the aggregate, or by the private sector, of $100 million or more annually (adjusted for inflation). In conducting these analyses, which are summarized below (and available in the docket), the FAA has determined that this rule is not ''a significant regulatory action'' under section 3(f) of Executive Order 12866 and therefore was not reviewed by the Office of Management and Budget. The rule is not considered significant under Department of Transportation Regulatory Policies and Procedures (44 FR 11034, February 26, 1979). In addition, for the reasons stated under the ''Regulatory Flexibility Determination,'' the ''International Trade Impact Assessment,'' and the ''Unfunded Mandates Assessment,'' the FAA certifies that this rule will not have a significant economic impact on a substantial number of small entities, will not constitute a barrier to international trade, and will not result in the expenditure by State, local, or tribal governments, in the aggregate, or by the private sector, of $100 million or more annually.

Regulatory Evaluation Summary

As stated in the preamble to the notice, the rule change will codify current industry practice (thus maintaining at least the current level of safety) and will not impose additional costs on manufacturers of transport category airplanes. Adequate strength has been achieved on existing airplanes by application of other part 25 design requirements and by manufacturers' needs to comply with the more stringent BCAR in order to sell airplanes overseas. Moreover, by conforming § 25.493 of the FAR with § 25.493 of the JAR, the new amendment will increase harmonization between American and European airworthiness standards and potentially reduce duplicate certification costs.

Regulatory Flexibility Determination

The Regulatory Flexibility Act of 1980 (RFA) was enacted by Congress to ensure that small entities are not unnecessarily or disproportionately burdened by Government regulations. The RFA requires a Regulatory Flexibility Analysis, in which alternatives are identified and evaluated, if a rule is expected to have ''a significant economic impact on a substantial number of small entities.'' The Small Business Administration (SBA) has established standards for complying with RFA review requirements in Federal rulemaking actions; the standards specify small entity size by Standard Industrial Classification (SIC). The rule change will affect manufacturers of transport category airplanes produced under new type certificates. The SBA specifies a size threshold for classification as a small entity as 1,500 or fewer employees. Since the rule will impose no incremental costs on airplane manufacturers (and, additionally, no part 25 airplane manufacturer has 1,500 or fewer employees), the rule change will not have a significant economic impact on a substantial number of small entities.

International Trade Impact Assessment

Consistent with the Administration's belief in the general superiority, desirability, and efficacy of free trade, it is the policy of the Administrator to remove or diminish, to the extent feasible, barriers to international trade, including barriers affecting the export of American goods and services to foreign countries and barriers affecting the import of foreign goods and services into the United States.

In accordance with that policy, the FAA is committed to develop as much as possible its aviation standards and practices in harmony with its trading partners. Significant cost savings can result from this, both to United States

companies doing business in foreign markets, and foreign companies doing business in the United States.

This rule is a direct action to respond to this policy by increasing the harmonization of the U.S. Federal Aviation Regulations with the European Joint Aviation Requirements. The result will be a positive step toward removing impediments to international trade.

Unfunded Mandates Assessment

Title II of the Unfunded Mandates Reform Act of 1995 (the Act), enacted as Pub. L. 104–4 on March 22, 1995, requires each Federal agency, to the extent permitted by law, to prepare a written assessment of the effects of any Federal mandate in a proposed or final agency rule that may result in the expenditure by State, local, and tribal governments, in the aggregate, or by the private sector, of $100 million or more (adjusted annually for inflation) in any one year. Section 204(a) of the Act, 2 U.S.C. 1534(a), requires the Federal agency to develop an effective process to permit timely input by elected officers (or their designees) of State, local, and tribal governments on a proposed ''significant intergovernmental mandate.'' A ''significant intergovernmental mandate'' under the Act is any provision in a Federal agency regulation that will impose an enforceable duty upon State, local, and tribal governments, in the aggregate, of $100 million (adjusted annually for inflation) in any one year. Section 203 of the Act, 2 U.S.C. 1533, which supplements section 204(a), provides that before establishing any regulatory requirements that might significantly or uniquely affect small governments, the agency shall have developed a plan that, among other things, provides for notice to potentially affected small governments, if any, and for a meaningful and timely opportunity to provide input in the development of regulatory proposals.

The FAA has determined that this rule does not contain a significant intergovernmental or private sector mandate as defined by the Act.

Federalism Implications

The regulation amended herein will not have substantial direct effects on the states, on the relationship between the national government and the states, or on the distribution of power and responsibilities among the various levels of government. Therefore, in accordance with Executive Order 12612, it is determined that this regulation will not have sufficient federalism implications to warrant the preparation of a Federalism Assessment.

International Civil Aviation Organization (ICAO) and Joint Aviation Regulations

In keeping with U.S. obligations under the Convention on International Civil Aviation, it is FAA policy to comply with ICAO Standards and Recommended Practices to the maximum extent practicable. The FAA has determined that this rule does not conflict with any international agreement of the United States.

Paperwork Reduction Act

In accordance with the Paperwork Reduction Act of 1995 (44 U.S.C. 3507(d)), there are no reporting or recordkeeping requirements associated with this rule.

Regulations Affecting Intrastate Aviation in Alaska

Section 1205 of the FAA Reauthorization Act of 1996 (110 Stat. 3213) requires the Administrator, when modifying regulations in Title 14 of the CFR in a manner affecting intrastate aviation in Alaska, to consider the extent to which Alaska is not served by transportation modes other than aviation, and to establish such regulatory distinctions as he or she considers appropriate. Because this final rule applies to the certification of future designs of transport category airplanes and their subsequent operation, it could affect intrastate aviation in Alaska. The Administrator has considered the extent to which Alaska is not served by transportation modes other than aviation, and how the final rule could have been applied differently to intrastate operations in Alaska. However, the Administrator has determined that airplanes operated solely in Alaska would present the same safety concerns as all other affected airplanes; therefore, it would be inappropriate to establish a regulatory distinction for the intrastate operation of affected airplanes in Alaska.

List of Subjects in 14 CFR Part 25

Aircraft, Aviation safety, Reporting and recordkeeping requirements.

Adoption of the Amendment

In consideration of the foregoing, the Federal Aviation Administration (FAA) amends 14 CFR part 25 of the Federal Aviation Regulations (FAR) as follows:

PART 25—AIRWORTHINESS STANDARDS: TRANSPORT CATEGORY AIRPLANES

1. The authority citation for part 25 continues to read:

Authority: 49 U.S.C. 106(g), 40113, 44701, 44702, and 44704.

2. Section 25.493 is amended by revising paragraph (c) and by adding new paragraphs (d) and (e) to read as follows:

§ 25.493 Braked roll conditions.

* * * * *

(c) A drag reaction lower than that prescribed in this section may be used if it is substantiated that an effective drag force of 0.8 times the vertical reaction cannot be attained under any likely loading condition.

(d) An airplane equipped with a nose gear must be designed to withstand the loads arising from the dynamic pitching motion of the airplane due to sudden application of maximum braking force. The airplane is considered to be at design takeoff weight with the nose and main gears in contact with the ground, and with a steady-state vertical load factor of 1.0. The steady-state nose gear reaction must be combined with the maximum incremental nose gear vertical reaction caused by the sudden application of maximum braking force as described in paragraphs (b) and (c) of this section.

(e) In the absence of a more rational analysis, the nose gear vertical reaction prescribed in paragraph (d) of this section must be calculated according to the following formula:

$$V_N = \frac{W_T}{A+B}\left[B + \frac{f\mu AE}{A+B+\mu E}\right]$$

Where:

V_N=Nose gear vertical reaction.

W_T=Design takeoff weight.

A=Horizontal distance between the c.g. of the airplane and the nose wheel.

B=Horizontal distance between the c.g. of the airplane and the line joining the centers of the main wheels.

E=Vertical height of the c.g. of the airplane above the ground in the 1.0 g static condition.

μ=Coefficient of friction of 0.80.

f=Dynamic response factor; 2.0 is to be used unless a lower factor is substantiated. In the absence of other information, the dynamic response factor f may be defined by the equation:

$$f = 1 + \exp\left(\frac{-\pi\xi}{\sqrt{1-\xi^2}}\right)$$

Where:

ξ is the effective critical damping ratio of the rigid body pitching mode about the main landing gear effective ground contact point.

Issued in Washington, DC, on May 18, 1998.

Jane F. Garvey,

Administrator.

[FR Doc. 98–13999 Filed 5–26–98; 8:45 am]

BILLING CODE 4910–13–P

federal register

Wednesday
May 27, 1998

Part IV

Department of Commerce

National Telecommunications and Information Administration

Public Telecommunications Facilities Program (PTFP) and PEACESAT Program; Notice

DEPARTMENT OF COMMERCE

National Telecommunications and Information Administration

[Docket Number: 960205021–A133–08]

RIN 0660–ZA01

Public Telecommunications Facilities Program (PTFP) and PEACESAT Program

AGENCY: National Telecommunications and Information Administration, Commerce.

ACTION: Notice of applications received.

SUMMARY: The National Telecommunications and Information Administration (NTIA) previously announced the solicitation of grant applications for two programs funded from the Public Broadcasting, Facilities, Planning and Construction Funds account. This notice announces the list of applications received and notifies any interested party that it may file comments with the Agency supporting or opposing an application.

FOR FURTHER INFORMATION CONTACT: Dennis Connors, Director, Public Telecommunications Facilities Program, telephone: (202) 482–5802; fax: (202) 482–2156. Information about the PTFP can also be obtained electronically via Internet (send inquiries to http://www.ntia.doc.gov).

SUPPLEMENTARY INFORMATION:

By **Federal Register** notice dated January 5, 1998, the NTIA, within the Department of Commerce, announced that it was soliciting grant applications for the Public Telecommunications Facilities Program (PTFP). NTIA announced that the closing date for receipt of PTFP applications was 8 p.m. EST, February 12, 1998.

In all, the PTFP received 245 applications from 45 states. The total amount of funds requested by the applicants is $66.4 million.

By **Federal Register** notice dated March 19, 1998, the NTIA also announced that it was soliciting grant applications for the Pan-Pacific Education and Communications by Satellite (PEACESAT) Program. NTIA announced that the closing date for receipt of PEACESAT applications was close of business, April 20, 1998.

In all, the PEACESAT Program received one application. The total amount of funds requested is $445,745.

Notice is hereby given that the PTFP received applications from the following organizations. The list includes all applications received. Identification of any application only indicates its receipt. It does not indicate that it has been accepted for review, has been determined to be eligible for funding, or that an application will receive an award.

Any interested party may file comments with the Agency supporting or opposing an application and setting forth the grounds for support or opposition. PTFP will forward a copy of any opposing comments to the applicant. Comments must be sent to PTFP at the following address: NTIA/PTFP, Room 4625, 1401 Constitution Ave., N.W., Washington, D.C. 20230.

The Agency will incorporate all comments from the public and any replies from the applicant in the applicant's official file.

Public Telecommunications Facilities Program Applications

Alaska

File No. 98023CRB Alaska Public Radio Network, 810 East 9th Ave Anchorage, AK 99501. Contact: Ms. Tammy Gilstrap, Business Manager. Funds Requested: $32,250. Total Project Cost: $ 43,300. To replace satellite upconverter equipment for the Alaska Public Radio Network (APRN), Anchorage.

File No. 98010CTB Bethel Broadcasting, Inc., KYUK–TV 640 Radio Street Pouch 468 Bethel, AK 99559. Contact: Ms. Jude Andrews, General Manager. Funds Requested: $254,349. Total Project Cost: $339,133. To purchase a video server and master control support equipment.

File No. 98028PTB Capital Community Broadcasting, Inc., Station KTOO–TV 360 Egan Drive Juneau, AK 998011748. Contact: Mr. Bill Legere, President & General Manager. Funds Requested: $594,830. Total Project Cost: $594,830. To plan for the conversion of public television translators to digital technologies.

File No. 98027CRB CoastAlaska, Inc., 360 Egan Drive, Suite 216 Juneau, AK 99801. Contact: Mr. Jon Newstrom, System Coordinator. Funds Requested: $126,129. Total Project Cost: $168,172. To place digital storage equipment and standardize the air chains at five public radio stations, KTOO–FM, Juneau; KCAW–FM, Sitka; KSFK–FM, Petersburg; KSTK–FM, Wrangell; and KRBD–FM, Ketchikan which cooperate as CoastAlaska, Inc. The project would also replace KRBD's Black Mountain translator with two translators.

File No. 98159CRB 97205 Kotzebue Broadcasting Inc., Station KOTZ–AM 396 Lagoon Drive P.O. Box 78 Kotzebue, AK 99752. Contact: Mr. Pierre Lonewolf, General Manager/Chief Engineer. Funds Requested: $107,401. Total Project Cost: $147,401. To provide digital audio storage and editing equipment.

File No. 98019CRB Silakkuagvik Communications, Inc., Station KBRW–AM P.O. Box 109 1695 Okpik St. Barrow, AK 99723. Contact: Mr. Donovan Rinker, Vice President & Gen. Mgr. Funds Requested: $ 39,814. Total Project Cost: $53,085. To replace studio production and operations equipment.

File No. 98232CRB Unalaska Community Broadcasting, Station KIAL–AM, 5th and Broadway P.O. Box 181 Unalaska, AK 99685. Contact: Mrs. Joy Mendoza, Acting General Manager. Funds Requested: $ 57,757. Total Project Cost: $77,010. To purchase uninterruptible power equipment.

File No. 98135CTB University of Alaska/Fairbanks, Station KUAC–TV 201 Theatre Building 312 Tanana Drive Fairbanks, AK 99775–5620. Contact: Mr. Jerry Brigham, General Manager. Funds Requested: $ 62,832. Total Project Cost: $ 95,200. To purchase five video recorders.

Alabama

File No. 98043CTB Alabama Public Television, 2112 11th Avenue South Suite 400 Birmingham, AL 35205–2884. Contact: Mr. Philip Hutcheson, Deputy Director/CFO. Funds Requested: $610,597. Total Project Cost: $1,221,194. To improve network interconnection by replacing 60% of its microwave transmission equipment and strengthening four towers; to improve its program origination capability by replacing a character generator and video editing equipment; and acquire closed-captioning equipment.

Arkansas

File No. 98080CTB Arkansas ETV Commission (AETN), 350 S. Donaghey Conway, AR 72032. Contact: Ms. Susan Howarth, Executive Director. Funds Requested: $292,924. Total Project Cost: $585,849. To replace origination equipment including prompters, lighting system, editors and monitors.

File No. 98096CTB Arkansas ETV Commission (AETN), 350 S. Donaghey Conway, AR 72032. Contact: Ms. Susan Howarth, Executive Director. Funds Requested: $559,577. Total Project Cost: $1,119,154. To replace the analog microwave system with a digital system.

File No. 98176ICTNO City Of Little Rock, City Manager's Office City Hall, Room 203, 500 West Markham, Little Rock, AR 72201. Contact: Ms. Darlene Garrett, Neighborhood Resource Ctr Coor. Funds Requested: $288,056. Total Project Cost: $576,112. To establish a distance learning center by purchasing a satellite receive-only earth station, and two-way teleconferencing equipment.

Arizona

File No. 98018CTB Arizona State University, KAET–TV, Box 871405, Tempe, AZ 85287–4505. Contact: Mr. Larry Fallis, Sponsored Projects Officer. Funds Requested: $295,000. Total Project Cost: $590,000. To replace studio and handheld cameras, monitoring and test equipment.

File No. 98105CTN City Of Bullhead City, CITY–TV, 1255 Marina Blvd., Bullhead City, AZ 86442. Contact: Mr. Pete Reeves, Economic Devel. Coordinator. Funds Requested: $18,750. Total Project Cost: $25,000. To activate a cable television access channel.

File No. 98055PTB Museum of Contemporary Art, 142 W. 20th St., Tucson, AZ 85701. Contact: Mr. Peter Grodach, Project Director. Funds Requested: $10,000. Total Project Cost: $10,000. To plan for the establishment of a Low Power Television Station.

File No. 98031CRB Northern Arizona University, KNAU–FM, Building 16, Room 219, Corner of Osborne and Tormey, Flagstaff, AZ 86011. Contact: Mr. John Stark, General Manager. Funds Requested: $75,873. Total Project Cost: $151,746. To replace transmitter, antenna and transmission line.

File No. 98034ICTN Northern Arizona University, Statewide Programs, Old Main, Bldg 10, Room 209, McMullen Circle, Flagstaff, AZ 86011. Contact: Mr. Edward Groenhout, Vice Provost. Funds Requested: $794,353. Total Project Cost: $1,059,138. To extend the Northern Arizona University Network (NAUNet) duplex microwave system distance learning network to the following: the Hualapai Family Resources Center in Peach Springs, the Whiteriver Unified School District on the White Mountain Apache Indian Reservation; and the Dine' College and the Ganado Unified School District both on the Navajo Indian Reservation.

File No. 98005CTB University of Arizona, KUAT–TV, University of Arizona, Tucson, AZ 85721. Contact: Mr. Ronald Stewart, Associate Director. Funds Requested: $254,000. Total Project Cost: $508,000. To replace cameras, video cassette recorders (VCR's) and the master control VCR with a video server.

File No. 98122CRB White Mountain Apache Tribe, KNNB, 88.1 FM, Apache Radio Executive Office Building, SR 73, Whiteriver, AZ 85941. Contact: Mr. Connor Murphy, Grant Writer. Funds Requested: $17,050. Total Project Cost: $34,100. To replace origination equipment.

California

File No. 98199PTB Alderwood Communications, 230 Fernwood Avenue, Oroville, CA 95966. Contact: Ms. Annette D'Brotherton, Executive Director. Funds Requested: $142,571. Total Project Cost: $142,571. To plan for a repeater radio station in Butte County, California.

File No. 98172ICTN Butte-Glenn Community College District, 3536 Butte Campus Drive, Oroville, CA 95965. Contact: Mr. Robert Ellworth, Media and DI Coordinator. Funds Requested: $25,708. Total Project Cost: $51,417. To replace transmitters for an ITFS system.

File No. 98061ICTN 97200 CSU-Fresno Foundation, Central Valley Technology Center, 4910 N. Chestnut Avenue, Fresno, CA 93726. Contact: Dr. Thomas McClanahan, Assoc VP/Grants & Res/CSU. Funds Requested: $690,943. Total Project Cost: $1,460,244. To activate a distance learning system consisting initially of 22 sites located throughout Fresno, Madera, Kings, and Tulare Counties.

File No. 98095CTB Coast Community College District, KOCE–TV, 15751 Gothard Street, Huntington Beach, CA 92647. Contact: Mr Mel Rogers, President. Funds Requested: $244,470. Total Project Cost: $488,940. To replace ten broadcast videotape machines with DVCPro format units.

File No. 98193CTB Community Television of Southern CA, 4401 Sunset Boulevard, Los Angeles, CA 90027. Contact: Mr. Donald Youpa, Executive Vice President & COO. Funds Requested: $76,229. Total Project Cost: $152,459. To support the conversion to digital of KCET–TV, Channel 28 in Los Angeles, CA, by replacing a manual on-air system with a new digital automation system.

File No. 98073CTB Community Television of Southern CA, 4401 Sunset Boulevard, Los Angeles, CA 90027. Contact: Mr. Donald Youpa, Executive Vice President & COO. Funds Requested: $1,440,685. Total Project Cost: $1,920,914. To complete the digital conversion of KCET–TV, Channel 59 (or Channel 32) in Los Angeles by installing a digital transmitter, encoders, antenna, transmission line, and STL.

File No. 98212CRB KQED Inc., 2601 Mariposa Street, San Francisco, CA 94110. Contact: Ms. Jo Anne Wallace, VP/KQED–FM General Manager. Funds Requested: $20,002. Total Project Cost: $40,005. To activate a translator that will serve Monterey, Carmel, Pacific Grove and Pebble Beach, California.

File No. 98104CTB KQED, Inc., 2601 Mariposa Street San Francisco, CA 94110. Contact: Ms. Jayme Burke, Development Associate. Funds Requested: $289,353. Total Project Cost: $578,706. To replace one-inch videotape machines, a video production switcher, and a audio console.

File No. 98119CTB KQED, Inc., 2601 Mariposa Street San Francisco, CA 94110. Contact: Ms. Jayme Burke, Development Associate. Funds Requested: $1,209,495. Total Project Cost: $2,418,990. To complete the digital conversion of KQED–TV, Channel 34 in San Francisco by replacing the transmitter, STL, the compression and multiplexing system and the master control switcher. The station will provide Standard Definition TV (SDTV) signals from its analog plant and multiple (four) SDTV channels via the DTV transmitter.

File No. 98224CTB 97101 KTEH Foundation, 1585 Schallenberger Road San Jose, CA 95131. Contact: Mr. Gary Martinez, Grants Associate. Funds Requested: $931,820. Total Project Cost: $1,242,427. To extend the station's signal by relocating the tower and replacing the transmitter, the antenna, the STL system and the transmission line.

File No. 98143ICTN Kern Educational T/C Consortium, 1300—17th Street, City Centre Bakersfield, CA 933014533. Contact: Dr. William Cochran, VP/Instruc/Porterville College. Funds Requested: $822,304. Total Project Cost: $1,823,838. To extend the microwave-based distance learning system to northern Kern County and southeastern Tulare County.

File No. 98240ICTN Monterey County Office of Education, Instructional Resources & Tech 910 Blanco Circle Salinas, CA 93901. Contact: Mr. Michael Mellon, Dir/Instr. Resources & Tech.. Funds Requested: $408,982. Total Project Cost: $968,842. To extend the ITFS-based distance learning system to San Benito and San Luis Obispo Counties and to expand the already-existing system in Monterey and Santa Cruz Counties to presently-unserved audiences.

File No. 98162PRB Radio Bilingue, 5005 E. Belmont Avenue Fresno, CA 93727. Contact: Mr. Hugo Morales, Executive Director. Funds Requested: $48,900. Total Project Cost: $65,200. To plan for the distribution of Radio Bilingue's Spanish-language service in the top ten Hispanic markets in the United States.

File No. 98187PRB Radio Bilingue, 5005 E. Belmont Avenue Fresno, CA 93727. Contact: Mr. Hugo Morales, Executive Director. Funds Requested: $50,400. Total Project Cost: $67,200. To plan for the establishment of a public radio station serving the Spanish-speaking residents of southwestern Texas.

File No. 98127PRB Round Valley Unified School Dist., Howard & High School District Covelo, CA 95428. Contact: Ms. Andrea Harris, Superintendent. Funds Requested: $10,745. Total Project Cost: $13,595. To plan for the activation of a public radio station in Round Valley, California.

File No. 98103CRB Rural California Broadcasting Corp., 5850 Labath Avenue Rohnert Park, CA 94928. Contact: Ms. Nancy Dobbs, President & CEO. Funds Requested: $ 11,715. Total Project Cost: $15,621. To expand the signal of KRCB–FM, operating on 91.1 MHz in Rohnert Park, California, by activating a translator in Santa Rosa, operating on 90.9 MHz.

File No. 98113CTB Rural California Broadcasting Corp., 5850 Labath Avenue Rohnert Park, CA 94928. Contact: Ms. Nancy Dobbs, President & CEO. Funds Requested: $78,015. Total Project Cost: $104,020. To improve the facilities of KRCB–TV, Channel 22 in Rohnert Park, California, by replacing VTRs in master control, production control and edit rooms with digital DVCPro units.

File No. 98116CTB San Diego State University Found., KPBS Television 5200 Campanile Drive San Diego, CA 92182. Contact: Ms. Susan Holloway, Director, Administrative Serv. Funds Requested: $687,400. Total Project Cost: $1,374,800. To construct a new tower and purchase a new antenna for the KPBS DTV assignment on UHF Channel 30. The project will also include replacement of the station's four studio cameras.

File No. 98156CRB Santa Monica Comm College District, 1900 Pico Boulevard Santa Monica, CA 90405. Contact: Ms. Ruth Seymour, General Manager. Funds Requested: $138,366. Total Project Cost: $184,488. To expand the signal of KCRW–FM by activating a repeater station in Mojave, KCRI–FM, 88.1 MHz.

File No. 98158IPTBN The Education Coalition, 2862 Millbridge Place San Ramon, CA 94583. Contact: Dr. Carla Lane, Executive Director. Funds Requested: $186,330. Total Project Cost: $365,930. To conduct a technology assessment of its affiliates in 17 states to determine how best to interconnect schools of education, K–12 districts, and other institutions involved in educational technology through existing and emerging technologies.

File No. 98223IPTN The National Hispanic University, 14271 Story Road San Jose, CA 95127. Contact: Dr. B. Roberto Cruz, President. Funds Requested: $98,500. Total Project Cost: $131,333. To design a Distance Learning Center focused on training teachers in bilingual education (Spanish/English) and to plan a delivery system that would disseminate its courses throughout California and nationally. The project involves San Jose State University, the Santa Clara Office of Education, and the Hispanic Educational Telecommunications System (HETS).

File No. 98090ICRTN Visible Light, Inc., The RAIN Network 1562 Cougar Ridge Road Buellton, CA 93427. Contact: Mr. Timothy Tyndall, Director. Funds Requested: $567,000. Total Project Cost: $756,000. To extend the services of the Regional Alliance for Information Networking (RAIN) system through the use of Internet and satellite technologies. The project will permit extension of service to 75 additional communities.

File No. 98091ICTN Visible Light, Inc., The RAIN Network 1562 Cougar Ridge Road Buellton, CA 93427. Contact: Mr. Timothy Tyndall, Director. Funds Requested: $319,500. Total Project Cost: $426,000. To extend the services of the Regional Alliance for Information Networking (RAIN) system through the use of Internet and satellite technologies. The project will permit extension of service to 250,000 additional people.

Colorado

File No. 98138CRB Colorado State Board of Agriculture, KDUR–FM 1000 Rim Drive Durango, CO 81301. Contact: Ms. Wynn Harris, Station Manager. Funds Requested: $15,872. Total Project Cost: $31,745. To replace transmission as well as production equipment.

File No. 98179CRB Denver Educ. Broadcasting, Inc., KUVO 2900 Welton Suite 200 Denver, CO 80205. Contact: Ms. Florence Hernandez-Ramos, President & CEO. Funds Requested: $47,342. Total Project Cost: $94,684. To replace transmitter, master control and production boards.

File No. 98152CTB Front Range Educational Media Corp., KBDI–TV 2900 Welton St., 1st Floor Denver, CO 80205. Contact: Mr. Theodore Krichels, General Manager. Funds Requested: $400,000. Total Project Cost: $800,000. To acquire a new automated master control system that will serve the needs of KBDI–TV and KRMA–TV, Ch. 6, in Denver. The equipment will be used under a joint operating agreement and will assist both stations as they begin their transition to digital technology by the year 2003.

File No. 98130CRB 97201 KUTE, Inc., KSUT–FM Public Radio P.O. Box 737 Ignacio, CO 81137. Contact: Mr. Carlos Sena, General Manager, KSUT–FM. Funds Requested: $55,989. Total Project Cost: $74,655. To acquire local origination equipment for a new studio to serve the Southern Ute Indian Tribe. In addition, project will acquire a studio-to-transmitter link (STL) to permit a new, second station, KUTE–FM on 90.1 MHz, located on Missionary Ridge to be programmed with a different public radio signal.

File No. 98216ICTN National Technological University, 700 Centre Avenue Fort Collins, CO 80526. Contact: Dr. Lionel Baldwin, President. Funds Requested: $201,960. Total Project Cost: $336,600. To purchase eight digital encoders and a disk storage system to permit the distribution via satellite of additional channels of instruction to home based PC's via the NTU Home Learner system.

File No. 98195CTB 97035 Rocky Mountain Public Broadcasting, KRMA–TV 1089 Bannock Street Denver, CO 80204. Contact: Mr. James Morgese, President/General Manager. Funds Requested: $205,653. Total Project Cost: $616,960. To interconnect the facilities of public television stations KRMA–TV, Ch. 6, in Denver and KTSC–TV, Ch. 8, in Pueblo by installing a two-way microwave interconnection. KRMA–TV will also acquire computer automation equipment to provide a distinct program feed to Pueblo.

File No. 98114CTB Rocky Mountain Public Broadcasting, KRMA–TV 1089 Bannock Street Denver, CO 80204. Contact: Mr. James Morgese, President/General Manager. Funds Requested: $62,000. Total Project Cost: $124,000. To replace analog videotape machines with digital machines. The project will also benefit KRMJ–TV, Ch. 18, in Grand Junction.

File No. 98076IPTN San Juan Basin Technical School, P.O. Box 970 33057 Highway 160 Cortez, CO 81321. Contact: Mr. William Lewis, Executive Director. Funds Requested: $146,100. Total Project Cost: $196,100. To help the Four Corners Distance Learning Planning Committee, acting through the San Juan Basin Technical School, Cortez, CO, to plan how to establish a distance learning infrastructure throughout southwest Colorado and southeast Utah.

File No. 98203CRB San Miguel Educational Fund, KOTO–FM 207 N. Pine St. Telluride, CO 81435. Contact: Mr. Ben Kerr, General Manager. Funds Requested: $47,940. Total Project Cost: $63,920. To install a repeater/satellite station on Gray Head.

File No. 98177CRB University of Northern Colorado, Radio KUNC, Greeley, CO 80639. Contact: Mr. Neil Best, Station Manager. Funds Requested: $61,350. Total Project Cost:

$89,300. To activate a repeater station on 88.3 MHz in Leadville and a translator on 89.5 in Yampa. In addition, KUNC–FM will replace its exciter, processor and related dissemination equipment.

Connecticut

File No. 98233CTB Connecticut Public Broadcasting, 240 New Britain Avenue Hartford, CT 06106. Contact: Mr James Whitsett, VP Operations and Engineering. Funds Requested: $388,726. Total Project Cost: $777,453. To improve the facilities of WEDW–TV, Channel 49 in Bridgeport, CT, by replacing the transmitter, the microwave link and monitoring equipment.

Florida

File No. 98041CTB Barry Telecommunications, Inc., WXEL–TV 3401 S. Congress Avenue Boynton Beach, FL 33426. Contact: Mr. Philip Dicomo, VP of Development. Funds Requested: $280,366. Total Project Cost: $560,733. To replace basic origination equipment including tape machines, the editing system and a field recorder.

File No. 98040CTB Community Communications, Inc., 11510 East Colonial Drive Orlando, FL 32817. Contact: Mr. Jose Fajardo, Vice President For Programming. Funds Requested: $3,072,398. Total Project Cost: $4,096,531. To improve the facilities of WMFE–TV, Channel 24 in Orlando, FL, by replacing the tower, the antenna and the transmission line.

File No. 98032CTB Florida State University, WFSU–TV 1600 Red Barber Plaza Tallahassee, FL 32310. Contact: Mrs. Donna Landrum, Business Manager. Funds Requested: $82,068. Total Project Cost: $164,136. To replace master control switcher with analog/digital-ready switcher and purchase a digital video disc record and playback system.

File No. 98133CRB Florida State University, WFSQ 1600 Red Barber Plaza Tallahassee, FL 32310. Contact: Mr. Andrew Hanus, Chief Engineer. Funds Requested: $16,305. Total Project Cost: $32,610. To replace STL system, audio processor and transmitter modulation monitors.

File No. 98178CTB Florida West Coast Public Brdcstg, WEDU 1300 North Boulevard Tampa, FL 33607. Contact: Ms. Elsie Garner, Sr. Vice President & COO. Funds Requested: $342,407. Total Project Cost: $684,814. To replace studio cameras with digitally capable units.

File No. 98165CRB Indian River Community College, WQCS Radio Reading Service 3209 Virginia Avenue Indian River Community College Fort Pierce, FL 34981.Contact: Mr. H. James Holmes, Station Manager. Funds Requested: $22,500. Total Project Cost: $30,000. To make WQCS's Radio Reading Service more accessible to people in the community by distributing 300 SCA receivers.

File No. 98085CRB Nathan B. Stubblefield Foundation, WMNF–FM 1210 East Dr. Martin Luther King Tampa, FL 33603. Contact: Mr. Richard Eiswerth, Station Manager. Funds Requested: $24,125. Total Project Cost: $48,250. To replace master control and studio equipment.

File No. 98128ICTN Palm Beach County Commission, WPY38/channel 20 301 N. Olive Ave., Suite 104 West Palm Beach, FL 33401. Contact: Ms. Julie Brechbill, TV Station Manager. Funds Requested: $44,272. Total Project Cost: $88,545. To construct a satellite downlink to improve MDS television facility WPY38, to provide national and government programing. WPY38 is available on cable Ch. 20 on most cable systems in Palm Beach County.

File No. 98072CTB Pensacola Junior College, WSRE–TV 1000 College Boulevard Pensacola, FL 32504. Contact: Mr. Allan Pizzato, General Manager. Funds Requested: $71,000. Total Project Cost: $142,000. To replace the studio audio board, audio cart machines and the production character generator.

File No. 98225ICTN Santa Fe Community College, 3000 NW 83rd Street Gainesville, FL 32606. Contact: Mr. W. Harvey Sharron, Dean for Development. Funds Requested: $280,272. Total Project Cost: $430,272. To establish an Interactive Video Classroom Distance Learning Network with facilities in Archer, Alachua/High Springs, and Hawthorne.

File No. 98222CTB The School Board of Miami-Dade Co., WLRN–TV 172 N. E. 15 Street Miami, FL 33132. Contact: Mrs. Laurel Long, Director of Finance and Admin. Funds Requested: $1,423,379. Total Project Cost: $2,846,758. To complete the conversion of WLRN–TV, Channel 20 in Miami to a digital broadcast facility by construction of a 1019 feet tower, and installation of a circular polarized antenna system, a digital transmitter, and a digital microwave system. WLRN will also purchase a multi-channel digital encoder system.

File No. 98144ICTN University Of Central Florida, College Of Arts & Sciences Communications Bldg., Suite 190F 4000 Central Florida Blvd. Orlando, FL 32816–1990. Contact: Dr. Haven Sweet, Assoc Dean, Arts & Sciences. Funds Requested: $93,783. Total Project Cost: $187,566. To purchase CODECS and equipment for an additional video classroom on the University's main campus and video classrooms at Lake Sumpter Community College in Sumpter County and the University's South Orlando campus.

File No. 98020CRB University Of Florida, WUFT–FM 2208 Weimer Hall, Gainesville, FL 32611. Contact: Mr. Henri Pensis, Station Manager. Funds Requested: $26,185. Total Project Cost: $52,370. To replace audio console, recording machines and cart machines.

File No. 98106CTB University Of Florida, WUFT–TV Weimer Hall, Gainesville, FL 32611. Contact: Mr. Richard Lehner, General Manager. Funds Requested: $90,365. Total Project Cost: $180,730. To replace origination and production equipment through the purchase of DVC-Pro videotape recorders and players.

File No. 98208CRB University of Central Florida, WUCF–FM Radio Suite 162 Library Building 4000 Central Florida Boulevard Orlando, FL 32816. Contact: Ms. Kayonne Riley, Manager. Funds Requested: $146,720. Total Project Cost: $293,440. To construct a new tower and install a new antenna system. These improvements will alleviate radio frequency interference and will permit the station to comply with radiation standards required by the FCC.

File No. 98053CTB WJCT, Inc., 100 Festival Park Avenue Jacksonville, FL 32202. Contact: Mr. Rick Johnson, Senior Vice President, Broadcast. Funds Requested: $384,350. Total Project Cost: $768,701. To replace studio cameras, video switcher, audio console, dual channel digital character generator, stillstore, frame synchronizer and tape machines.

File No. 98098CRB WJCT, Inc., 100 Festival Park Avenue Jacksonville, FL 32202. Contact: Mr. Rick Johnson, Sr. Vice President, Broadcasting. Funds Requested: $34,895. Total Project Cost: $69,790. To replace remote production and distribution equipment including the audio mixer, digital audio record and playback units, and a digital remote program link. The station will also replace the STL with a digital multi-channel system.

Georgia

File No. 98173CRB Okefenokee Educational Foundation, 205 Rose Avenue Folkston, GA 31537. Contact: Mr. Jack Mays, President. Funds Requested: $34,295. Total Project Cost: $45,727. To construct a new noncommercial radio station to operate on 91.3 MHz in Folkston, GA.

Hawaii

File No. 98062IPTBN Hawaii Department Of Education, Teleschool Branch 1112 Mapunapuna Street, Suite 20 Honolulu, HI 96819. Contact: Mrs. Geriann Hong, Director, Teleschool Branch. Funds Requested: $121,222. Total Project Cost: $189,122. To plan for the establishment of a broadcast television facility and evaluate alternative transmission technologies for distance learning services.

File No. 98066CRB Kauai Community Radio, 4520–D Hanaki Plantation Rd. Princeville, HI 96722. Contact: Mr. Jon Scott, General Manager. Funds Requested: $10,100. Total Project Cost: $13,470. To extend station KAQA(FM) operating on 91.9 MHz by constructing a booster station operating on 91.9 MHz to serve Kilauea Town.

File No. 98188IPRTN University of Hawaii, Social Science Research Institute, 2530 Dole St., Honolulu, HI 96822. Contact: Dr. Norman H. Okamura. Funds Requested: $428,213. Total Project Cost: $556,688. To enable the PEACESAT Program to support public service and development communications to the Pacific Islands including the expansion of new digital services and distance learning via satellite.

Iowa

File No. 98148CTB Iowa Public Broadcasting Board, Iowa Public Television 6450 Corporate Drive Johnston, IA 50131. Contact: Mr. Dennis Malloy, Director Community Relations. Funds Requested: $2,249,719. Total Project Cost: $2,999,626. To convert public television station KIIN, ch. 12, Iowa City, IA, to digital broadcasting on channel 45.

File No. 98184CRB Iowa Western Community College, KIWR (FM) 2700 College Road Council Bluffs, IA 51503. Contact: Ms. Vicki Ratliff, General Manager. Funds Requested: $187,921. Total Project Cost: $375,842. To replace the transmitter, transmission line, STL, audio consoles, digital work stations, and other audio equipment.

File No. 98050CRB University of Northern Iowa, KUNI (FM) 324 Communication Arts Center Cedar Falls, IA 50614. Contact: Ms Barbara Reid, Administrative Assistant. Funds Requested: $697,200. Total Project Cost: $1,743,000. To construct a transmitter tower to take the place of one the station must vacate because its owner requires the tower capacity for converting itself to DTV.

Idaho

File No. 98084CRB Boise State University, BSU Radio Network 1910 University Drive Boise, ID 83725. Contact: Dr. James Paluzzi, General Manager. Funds Requested: $46,024. Total Project Cost: $61,366. To replace the transmission antenna of KBSU–FM, 90.3 MHz, which was damaged by ice storms.

File No. 98016CTB Idaho Public Television, 1455 North Orchard Boise, ID 83706. Contact: Mr. Phillip Kottraba, Fiscal Officer. Funds Requested: $715,026. Total Project Cost: $953,368. To improve operation of the Idaho Public Television network by replacing microwave equipment.

File No. 98142PRB Mackay School District, 400 East Spruce P.O. Box 390 Mackay, ID 83251. Contact: Mrs. Colleen Cox, Economic Development Coord. Funds Requested: $33,392. Total Project Cost: $33,392. To plan for the activation of a public radio station in Mackay, ID.

File No. 98074ICTN North Idaho College, 1000 West Garden Avenue Coeur d'Alene, ID 83814. Contact: Ms. Janet Benoit, Grants Coordinator. Funds Requested: $100,000. Total Project Cost: $210,000. To extend distance learning system to Priest River High School, Lake City High School, and Timberlake High School, near Spirit Lake.

Illinois

File No. 98140CTB CONVOCOM, WSEC–TV c/o University of Illinois/ Springfield Shepherd Rd., Bldg. K, Rm. 64 Springfield, IL 62707. Contact: Mr. Terrance Kenny, Special Projects Coordinator. Funds Requested: $681,111. Total Project Cost: $1,047,863. To replace master control equipment, including video and routing switchers and associated equipment, video recording/playback equipment, a still store, digital/analog converters, and test equipment. CONVOCOM operates public television stations WSEC–TV, WMEC–TV, and WQEC–TV.

File No. 98150PTB Illinois Valley Public TV, 1501 W. Bradley Avenue Peoria, IL 61625. Contact: Mr. Chester Tomczyk, President. Funds Requested: $135,000. Total Project Cost: $180,000. WTVP will examine—on behalf of nine members of the Illinois Public Broadcasting Council—operational, technical, and logistical issues related to the conversion to digital television (DTV) and its impact on the stations' ability to continue cooperative program services to the citizens of Illinois. In addition to WTVP, the members of the Council are WTTW, WYCC, WILL–TV, WEIU–TV, WQPT, WSIU–TV, WSEC and WUSI–TV.

File No. 98202CTB University of Illinois, WILL–TV 801 South Wright Street Champaign, IL 61820. Contact: Mr. J. J. Kamerer, Director-Grants & Contracts. Funds Requested: $111,000. Total Project Cost: $222,000. To replace an editing system, a character generator, video recorders, a still store, and audio cartridge recorders.

File No. 98186CTB Window to the World Communications, WTTW 5400 North St. Louis Ave. Chicago, IL 16062. Contact: Mr. Martin McLaughlin, V. President, Corporate Affairs. Funds Requested: $337,757. Total Project Cost: $675,514. To replace production equipment, including video recorders, a character generator, a still store, and a video server.

Indiana

File No. 98111CTB Ball State University, WIPB (TV) E. F. Ball Building 2000 University Avenue Muncie, IN 47306. Contact: Mr. Robert Smith, Station Manager. Funds Requested: $62,250. Total Project Cost: $124,500. To replace tape recorders and acquire a disk-based local insertion system.

File No. 98124CTB Indiana University, Radio & TV Services, WTIU P.O. Box 1847 Bloomington, IN 47402. Contact: Mr. Barrie Zimmerman, Operations & Dir, Engineering. Funds Requested: $110,258. Total Project Cost: $220,516. To replace a video tape editing system and three field cameras and associated equipment items.

File No. 98012CTB Michiana Public Broadcasting, WNIT 2300 Charger Boulevard Elkhart, IN 46514. Contact: Ms. Trina Cutter, President/General Manager. Funds Requested: $84,687. Total Project Cost: $169,375. To replace character generators, an audio console, video and audio monitors, and distribution amplifiers.

File No. 98029CTB Tri-State Public Teleplex, WNIN–TV 405 Carpenter Street Evansville, IN 47708. Contact: Mr. David Dial, President & General Manager. Funds Requested: $64,346. Total Project Cost: $128,692. To replace a character generator, a video recorder, camera pedestals, and studio lighting instruments and by acquiring a non-linear editing system.

File No. 98241CRB Veedee Co., 807 E. Broadway, Kokomo, IN 46901. Contact: Ms. Vicky Tyler, President. Funds Requested: $82,000. Total Project Cost: $107,000. To construct a television facility.

Kansas

File No. 98025CTB Kansas Public Telecom. Serv., Inc., 320 West 21st Street North Wichita, KS 67203. Contact: Mr. David McClintock, Director of Engineering. Funds Requested: $64,931. Total Project Cost: $129,862. To replace the film system at KPTS–TV

and to interconnect with a cable company in order to provide a second channel and a distance learning service to the area schools.

File No. 98083CRB Kanza Society, Inc., c/o: High Plains Public Radio 210 North 7th Street Garden City, KS 67846. Contact: Mr. Quentin Hope, President, Board of Directors. Funds Requested: $18,366. Total Project Cost: $36,733. To acquire a digital audio management and automation system for KANZ–FM.

File No. 98082CRB Kanza Society, Inc., c/o: High Plains Public Radio 210 North 7th Street Garden City, KS 67846. Contact: Mr. Quentin Hope, President, Board of Directors. Funds Requested: $359,034. Total Project Cost: $478,713. To construct two satellite/repeater FM stations in Vega, TX (91.5 MHz) and Pampa, TX (89.5 MHz).

File No. 98017CRB University of Kansas, KANU–FM Broadcasting Hall Lawrence, KS 66045. Contact: Mrs. Janet Campbell, Interim Director. Funds Requested: $27,736. Total Project Cost: $55,472. To replace transmitter and related transmission equipment and 50 SCA radio receivers.

File No. 98021CTB Washburn University of Topeka, KTWU–TV 1700 SW College Ave. Topeka, KS 66621. Contact: Mr. Robert Fidler, Director of Operations. Funds Requested: $27,320. Total Project Cost: $54,640. To replace ¾'' u-matic tape machines in master control.

Kentucky

File No. 98071CRB Appalshop, WMMT 306 Madison Street Whitesburg, KY 41858. Contact: Mr. R. Raymond Moore, Administrative Director. Funds Requested: $75,982. Total Project Cost: $101,310. To replace origination and interconnection equipment, including audio consoles, DAT recorders, microphones, CD players, telephone interface, STL, and remote control.

File No. 98117CTB Kentucky Educational Television, WKMU (TV) 600 Cooper Drive Lexington, KY 40502. Contact: Mrs. Virginia Fox, Executive Director. Funds Requested: $469,750. Total Project Cost: $939,500. To replace the transmitter at WKMU, ch. 51, Murray/Mayfield, KY.

File No. 98056CRB Kentucky Public Radio, d.b.a. Public Radio Partnership 301 York Street Louisville, KY 40203. Contact: Ms. Kathi Ellis, Grant Writer. Funds Requested: $200,435. Total Project Cost: $400,870. To augment the operational capability of Kentucky Public Radio, which operates WFPL 89.3 MHz, WUOL 90.5 MHz, and WFPK 91.8 MHz, in Louisville, KY, by acquiring equipment for its new building, including an STL interface, fiber satellite connection, audio consoles, a production console, CD equipment and 12 digital audio work stations.

File No. 98075IPTBN The Center For Rural Development, 2292 South Highway 27, Suite 30 Somerset, KY 42501. Contact: Ms. Hilda Legg, Executive Director & CEO. Funds Requested: $47,875. Total Project Cost: $191,309. To plan for a new video production facility to produce distance learning programming for statewide distribution.

Louisiana

File No. 98209CTB Greater New Orleans ETV Fdn., WYES–TV 916 Navarre Ave. New Orleans, LA 70124. Contact: Mr. Randall Feldman, President & Gen. Mgr. Funds Requested: $265,000. Total Project Cost: $530,000. To replace transmission line, video cassette recorders and acquire a digital video effects machine.

File No. 98045CTB LA Educational Television Authority, 7733 Perkins Road Baton Rouge, LA 70810. Contact: Ms. Cynthia Rougeou, CAO. Funds Requested: $107,187. Total Project Cost: $214,375. To replace transmission line at KLTL–TV, Ch. 18, in Lake Charles.

File No. 98154CTB LA Educational Television Authority, 7733 Perkins Road Baton Rouge, LA 70810. Contact: Ms. Cynthia Rougeou, CAO. Funds Requested: $150,000. Total Project Cost: $300,000. To replace the network's master control transports with a digital storage and retrieval system at public television station WLPB–TV, Ch. 27, in Baton Rouge.

File No. 98242CRB Louisiana State Univ. in Shreveport, Red River Public Radio Net—KBSA One University Place Shreveport, LA 71115. Contact: Ms. Catherine Fraser, General Manager. Funds Requested: $43,822. Total Project Cost: $58,430. To return public radio station KBSA–FM, 90.9 MHz, in El Dorado, AR to full service after its antenna and transmission line were destroyed when the tower collapsed during a severe storm on 2/10/98.

File No. 98160ICTN NOETC, Inc., 2929 S. Carollton Avenue New Orleans, LA 70118. Contact: Dr. Gordon Mueller, Member, Exec. Committee. Funds Requested: $62,319. Total Project Cost: $124,638. To extend the ITFS distance learning system of the New Orleans Educational Telecommunications Consortium to the Lakefront Campus of the University of New Orleans and to the Stennis Space Center, Biloxi, MS. The project would also enable Nunez Community College in New Orleans to reach an unserved population in rural Plaquemine Parish.

File No. 98107ICTN New Orleans Public Schools, 3510 General DeGaulle Drive New Orleans, LA 70114. Contact: Dr. James Lloyd, Compliance Officer. Funds Requested: $92,440. Total Project Cost: $184,880. To establish an ITFS distance learning system in 95 schools. New Orleans Public Schools is conducting this project in cooperation with public television station WLAE–TV, New Orleans and the schools districts of six Parishes in greater New Orleans.

Massachusetts

File No. 98129CRB Emerson College, WERS–FM 100 Beacon Street Boston, MA 02116. Contact: Mr. Arthur Singer, GM Television, Film & Radio. Funds Requested: $198,375. Total Project Cost: $264,500. To replace the studio console and purchase a server-based digital audio network and a computerized traffic and billing system.

File No. 98046CTB WGBH Educational Foundation, Production Services Division 125 Western Avenue Boston, MA 02134. Contact: Mr. Andrew Griffiths, VP Finance and Administration. Funds Requested: $370,355. Total Project Cost: $740,710. To replace production equipment with six D–5 and four D-Beta VTRs.

Maryland

File No. 98092PTB Enchanted Communications, 3 Brookebury Drive # 2b Reistertown, MD 21136. Contact: Mr. Caleb Crump, CEO. Funds Requested: $150,000. Total Project Cost: $150,000. To improve the applicant's production capabilities by purchasing cameras, monitors, playback machines and lights, plus an editing system and a microphone system.

File No. 98126CTB Maryland Public Television, 11767 Owings Mills Boulevard Owings Mills, MD 21117. Contact: Mr. Robert Sestili, Senior Vice President/COO. Funds Requested: $430,000. Total Project Cost: $860,000. To replace master control equipment with digital state-of-the-art units, including the routing switcher and tape machines. The project also includes an automation system and a digital audio/video server system.

File No. 98134CTN Telecommunications Access of Maryland, 301 West Preston Street, Suite 1, Baltimore, MD 21117. Contact: Mr. Gilbert L. Becker, Assistant Director. Funds Requested: $125,000. Total Project Cost: $250,000. To provide video conferencing equipment which would be used only to allow the hearing-impaired access to regular telephone service.

File No. 98003ICTN University of Maryland, Eastern Shore, Department Of English Wilson Hall University Of Maryland Eastern S Princess Anne, MD 21853. Contact: Dr. Chester Hedgepeth, Assoc. Professor. Funds Requested: $92,201. Total Project Cost: $122,935. To construct a Ku-band analog satellite uplink to provide distance learning throughout the DELMARVA peninsula.

Michigan

File No. 98006CTB Grand Valley State University, d.b.a. West Michigan Pub Bdctng 301 West Fulton Street Grand Rapids, MI 49504. Contact: Mr. Robert Lumbert, Director of Engineering. Funds Requested: $516,085. Total Project Cost: $1,032,170. To replace video recorders, a video file server, monitors, and amplifiers.

File No. 98226ICTN Lansing Community College, Extension & Community Education 28 N. Capital Lansing, MI 48933. Contact: Ms. Jean Morciglio, Director/Ext. & Commun. Educ. Funds Requested: $320,000. Total Project Cost: $640,000. To extend distance learning by purchasing video classroom equipment for the College's campus and four area school districts.

File No. 98099CRTB Northern Michigan University, WNMU–TV & WNMU–FM Learning Resources Division Elizabeth Harden Drive Marquette, MI 49855. Contact: Mr. Scott Seaman, General Manager. Funds Requested: $65,150. Total Project Cost: $130,300. To replace production equipment for the applicant's television and radio facilities.

File No. 98047ICTN R.E.M.C. #10, Thumb Area Television (TATV) 4415 S. Seeger Street Cass City, MI 48726. Contact: Mr. Timothy von Hoff, Director. Funds Requested: $215,471. Total Project Cost: $391,756. To purchase a video bridge and to install video classrooms in two hospitals in rural areas of ''The Thumb'' section of eastern Michigan.

File No. 98149ICTN St. Clair County ISD, 499 Range Road P.O. Box 5001 Port Huron, MI 48061–5001. Contact: Ms. Cynthia Banach, Assistant Superintendent. Funds Requested: $438,340. Total Project Cost: $875,380. To establish a distance learning system via video classrooms in nine high schools and five additional sites.

File No. 98057CRB University of Michigan, WUOM (FM) 5000 LSA Building 500 South State Street Ann Arbor, MI 48109–1382. Contact: Mr. Donovan Reynolds, Director of Broadcasting. Funds Requested: $206,136. Total Project Cost: $412,272. To replace production equipment, including mixers, digital work stations, and routing switchers

Minnesota

File No. 98146CRB Mankato State University, KMSU (FM) 1536 Warren Street MSU 153/P.O. Box 8400 Mankato, MN 56002. Contact: Ms. Marilee Rickard, Station Manager. Funds Requested: $27,170. Total Project Cost: $54,341. To replace the transmitter.

File No. 98227CRB Minnesota Public Radio, KCCM 45 East 7th Street Saint Paul, MN 55101. Contact: Mr. Ron Hall, Research Assistant. Funds Requested: $244,470. Total Project Cost: $488,940. To replace a transmitter at station KCCM, 91.1 MHz, Moorehead, MN, and replace production equipment at network headquarters, including production equipment used for national productions.

File No. 98007CTB Northern Minnesota PTV, KAWE (TV) BSU, Box 9 1500 Birchmont Drive, N.E. Bemidji, MN 56601–2699. Contact: Mr. William Sanford, Director of Engineering. Funds Requested: $498,375. Total Project Cost: $664,500. To replace a transmitter and associated equipment items.

File No. 98131CTB Pioneer Public Television, 120 West Schlieman Appleton, MN 56208. Contact: Mr. Ansel Doll, General Manager. Funds Requested: $210,450. Total Project Cost: $420,900. To equip a remote production van at KWCM, ch. 10, Appleton, MN.

File No. 98008CRB Saint Cloud State University, KVSC Stewart Hall #27, 720 4th Ave. South St. Cloud, MN 56301. Contact: Mr. Richard Hill, General Manager. Funds Requested: $6,221. Total Project Cost: $12,443. To purchase a satellite downlink.

File No. 98054CTB Twin Cities Public Television, KTCA 172 East 4th Street Saint Paul, MN 55101. Contact: Mr. Daniel Thomas, VP Operations. Funds Requested: $1,439,600. Total Project Cost: $2,879,200. To convert public television station KTCA, ch. 2, St. Paul, MN, to digital broadcasting on channel 34.

File No. 98051CRB University of Minnesota-Duluth, KUMD (FM) 130 Humanities Building 10 University Drive Duluth, MN 55812. Contact: Mr. Paul Schmitz, Station Manager. Funds Requested: $31,773. Total Project Cost: $63,547. To replace and upgrade an audio hard disk and production equipment.

Mississippi

File No. 98001CTB Mississippi Authority For Educational Television, 3825 Ridgewood Road, Jackson, MS, 39211. Contact: Mrs. Willie Tucker, Grants Administrator. Funds Requested: $1,043,392. Total Project Cost: $2,086,785. To purchase a tall tower as well as an antenna, a transmission line, and emergency auxiliary transmission equipment for public television station WMPN, Ch. 29, Jackson, MS. These purchases were made necessary on an emergency basis by the October 23, 1997 collapse of the tower on which WMPN–TV's antenna was located.

Missouri

File No. 98183CRB Double Helix Corporation, KDHX (FM) 3504 Magnolia Ave. St. Louis, MO 63118. Contact: Ms. Beverly Hacker, Interim Station Manager. Funds Requested: $55,717. Total Project Cost: $74,290. To replace a transmitter.

File No. 98174CRB 97114 New Wave Corporation, KOPN (FM) 915 East Broadway Columbia, MO 65201. Contact: Mr. Steve Spencer, General Manager. Funds Requested: $65,686. Total Project Cost: $131,373. To replace the transmitter, STL, and production equipment.

File No. 98145CTB Public Television 19, Inc., KCPT 125 East 31st Street Kansas City, MO 64108. Contact: Ms. Brenda Williams, Grant Coordinator. Funds Requested: $271,225. Total Project Cost: $542,450. To replace master control equipment..

File No. 98220CRB Southeast Missouri State University, KRCU/ Southeast Public Radio One University Plaza Cape Girardeau, MO 63701. Contact: Mr. Greg Petrowich, General Manager. Funds Requested: $141,495. Total Project Cost: $188,661. To activate a repeater station on 88.7 MHz in Poplar Bluff, MO.

File No. 98219CRB Southeast Missouri State University, KRCU/ Southeast Public Radio One University Plaza Cape Girardeau, MO 63701–4799. Contact: Mr. Greg Petrowich, General Manager. Funds Requested: $238,403. Total Project Cost: $317,871. To activate a repeater station on 88.9 MHz in Farmington, MO.

File No. 98064CRB University of Missouri-St. Louis, KWMU 8001 Natural Bridge Road St. Louis, MO 63121–4499. Contact: Ms. Patricia Bennett, Director & General Manager. Funds Requested: $31,640. Total Project Cost: $63,280. To replace production equipment in the station's news booth, including audio consoles, DAT recorders, cassette recorders, CD players, telephone hybrids, microphones, and appropriate cabinetry.

File No. 98181ICTN University of Missouri-St. Louis, Instructional Technology Center 113 Lucas Hall 8001 Natural Bridge St. Louis, MO 63121. Contact: Mrs. Jahna Kahrhoff, Asst. Dir/

Instr. Tech. Center. Funds Requested: $89,985. Total Project Cost: $179,970. To interconnect the applicant's St. Louis EdNet distance learning network with the Mid-America Aquacenter, the St. Louis Science Center, and the St. Louis Symphony.

Montana

File No. 98015CTB Montana State University-Bozeman, College Of Arts & Architecture P.O. Box 173340 172 Visual Communications Building Bozeman, MT 59717. Contact: Mr. Jack Hyyppa, Station Manager. Funds Requested: $364,760. Total Project Cost: $729,520. To replace studio cameras, and other production equipment.

File No. 98204PRB Northern Cheyenne Tribe, Box 140 Lame Deer, MT 59043. Contact: Mr. John Grinsell, Tribal Council Member. Funds Requested: $48,282. Total Project Cost: $55,479. To plan for the first public radio station to serve the Northern Cheyenne Reservation.

North Carolina

File No. 98038CTB Charlotte-Mecklenburg Pub Brdctg, WTVI–TV 3242 Commonwealth Avenue Charlotte, NC 28205. Contact: Mr. Harold Bouton, President & CEO. Funds Requested: $52,846. Total Project Cost: $105,692. To purchase a digital video server to replace videotape machines.

File No. 98147CRB Friends Of Public Radio, Inc., WHQR–FM 254 North Front Street Wilmington, NC 28401. Contact: Mr. Daniel Campbell, Gen. Mgr. Funds Requested: $127,500. Total Project Cost: $170,000. To increase the station's power, increase the antenna height and use a directional antenna to provide first public radio service to about 69,000 people.

File No. 98139CTB 97164, 96231 University of North Carolina Ctr. for Public TV, 10 TW Alexander Drive Research Triangle Park, NC 27709. Contact: Ms. Meg Lu, Director of Administration. Funds Requested: $1,574,523. Total Project Cost: $4,890,000. To replace transmission equipment and construct a taller tower at WUND–TV, Channel 2, in Columbia, thereby extending coverage area to the state's northeast region.

File No. 98231CRB University Of North Carolina, WUNC Radio CB#0915 Room 105 Swain Hall Cameron Avenue Chapel Hill, NC 27599–9015. Contact: Mr. Thomas Davis, General Manager. Funds Requested: $453,375. Total Project Cost: $604,500. To extend public radio service to the Outer Banks area of North Carolina by constructing an FM station with a local studio in Manteo, operating on 88.9 MHz; and translator stations in Buxton, operating on 91.1 MHz and in Waves, operating on 90.1 MHz.

North Dakota

File No. 98215CTB., Prairie Public Broadcasting, Inc., 207 North 5th Street P.O. Box 3240, Fargo, ND 58102. Contact: Ms. Kathleen Pavelko, President & CEO. Funds Requested: $1,126,619. Total Project Cost: $1,502,159. To construct a new digital public television station, Ch. 22, in Bismarck.

File No. 98214CTB Prairie Public Broadcasting, Inc., 207 North 5th Street, P.O. Box 3240, Fargo, ND 58102. Contact: Ms. Kathleen Pavelko, President & CEO. Funds Requested: $32,535. Total Project Cost: $43,380. To replace an audio-video switcher.

Nebraska

File No. 98093CTN ADEC Corporation, C218 Animal Science Building, University of Nebraska-Lincoln, Lincoln, NE 68583. Contact: Dr. Janet Poley, President/CEO. Funds Requested: $278,800. Total Project Cost: $557,600. To expand services by purchasing a multi-channel digital encoder for A*DEC's satellite hub at Colorado State University in Ft. Collins, CO and a single channel digital encoder for Penn State University's satellite uplink in State College, PA.

File No. 98087ICTN Little Priest Tribal College, Box 270, Winnebago, NE 68071. Contact: Mr. Ben Kitto, VP Academic Services. Funds Requested: $142,839. Total Project Cost: $192,310. To construct a VSAT satellite facility for distance learning services to the Winnebago Indian Reservation and to exchange programing with other tribal colleges affiliated with the American Indian Higher Education Consortium.

File No. 98230PTB Nebraska Educ. T/C Commission, 1800 N 33 Street, P.O. Box 83111, Lincoln, NE 68501–3111. Contact: Mr. Rod Bates, Secretary. Funds Requested: $150,000. Total Project Cost: $300,000. To plan the conversion of the state's public television network to digital television (DTV).

File No. 98210CRB Nebraska Educational T/C Commission, 1800 N 33 Street, P.O. Box 83001, Lincoln, NE 68501. Contact: Mr. Rod Bates, Secretary. Funds Requested: $62,728. Total Project Cost: $125,456. To replace transmission system, change frequency to 91.1 MHz and re-orient the antenna of KUCV–FM in Lincoln in order to improve coverage to about 70,000 people.

File No. 98221CTB Nebraska Educational T/C Commission, 1800 N. 33 Street, P.O. Box 83111, Lincoln, NE 685013111. Contact: Mr. Rod Bates, Secretary. Funds Requested: $714,122. Total Project Cost: $1,428,245. To replace the transmitter at KXNE–TV, Norfolk and acquire a Hard Disk Server System, a master control switcher, a non-linear edit system, four studio camera pedestals and studio lighting system for the Network Operations Center.

File No. 98011CRB Univ. of Nebraska at Omaha, KVNO, 60th & Dodge Street Engineering Bldg. #200, Omaha, NE 68182. Contact: Ms Debra Aliano, General Manager. Funds Requested: $40,000. Total Project Cost: $83,000. To replace transmitter, antenna, line and associated equipment.

File No. 98009CTB Univ. of Nebraska at Omaha, UNO, 60th & Dodge Street Engineering Bldg. #200, Omaha, NE 68182. Contact: Ms. Debra Aliano, General Manager. Funds Requested: $42,480. Total Project Cost: $88,500. To acquire a master control switching system for KYNE–TV.

New Hampshire

File No. 98002CTB University of New Hampshire, New Hampshire Public Television, 268 Mast Road Durham, NH 03824. Contact: Mr. Robert Ross, Director of Engineering. Funds Requested: $187,500. Total Project Cost: $375,000. To replace video tape recorders, ENG equipment and test equipment with digital units at WENH–TV, Durham.

New Jersey

File No. 98059CRB 97136 Burlington County College, County Route 530, Pemberton-Browns Mills Road, Pemberton, NJ 08068. Contact: Mr. Drew Jacobs, Program Operations Manager. Funds Requested: $29,753. Total Project Cost: $59,507. To extend the service of WBZC–FM, by activating two translators, one in Burlington/Beverly, operating on 95.1 MHz, and one in Palmyra/Riverton, operating on 107.5 MHz.

File No. 98136CRB New Jersey Public Broadcasting Auth, 25 South Stockton Street, P.O. Box 777, Trenton, NJ 08625. Contact: Mr. William Schnorbus, Assistant Director of Engineer. Funds Requested: $114,787. Total Project Cost: $153,050. To construct repeater FM transmitters WNJM(FM), 88.9 MHz, in Manahawkin and WNJZ(FM), 90.3 MHz.,in Cape May Courthouse.

File No. 98068CTB Thomas Edison State College, NJ Library For The Blind, 2300 Stuyvesant Avenue Trenton, NJ 08618. Contact: Ms. Donna Bensen, Director, Audiovision. Funds Requested: $53,750. Total Project Cost:

$135,020. To expand the Audiovision reading service for the visually impaired and the illiterate. The project will fund satellite receive and production equipment and will provide for the purchase of 500 SAP receivers. The reading service will be carried on the audio channels of NJ Public Broadcasting Authority's WNJT, Trenton and WNJS, Camden.

New Mexico

File No. 98243CRB Eastern New Mexico University, KENW–FM Station 52 Portales, NM 88130. Contact: Mr. Duane Ryan, Director of Broadcasting. Funds Requested: $22,175. Total Project Cost: $32,900. To construct new translators at Fort Sumner (91.7 MHz) and Conchas Lake (88.3 MHz).

File No. 98052CTB Eastern New Mexico University, KENW–TV Station 52 Portales, NM 88130. Contact: Mr. Duane Ryan, Director of Broadcasting. Funds Requested: $178,500. Total Project Cost: $357,000. To replace three studio cameras and related equipment.

File No. 98101CTB New Mexico State University, KRWG–TV, Room 100 Milton Hall Jordan Street, NMSU Las Cruces, NM 88003. Contact: Mr. Ronald Salak, General Manager. Funds Requested: $474,430. Total Project Cost: $948,860. To replace five TV translators in Cliff/Gilla, Ch.2, Hillsboro, Ch. 13, Lordsboro, Ch. 2, Hatch, Ch. 65, and Truth or Consequences, Ch. 59. The project will also replace a studio-to-transmitter link, and obsolete production, master control and test equipment.

File No. 98236CRB Self Reliance Foundation, 121 Sandoval Street, 3rd Floor, Santa Fe, NM 87501. Contact: Mr. Roberto Salazar, Chief of Staff. Funds Requested: $398,000. Total Project Cost: $798,600. To equip fifty affiliated Spanish-language stations in the United States with satellite downlinks.

File No. 98132CTB University of New Mexico, KNME–TV, 1130 University Blvd. NE, Albuquerque, NM 87102. Contact: Mr. Jon Cooper, General Manager. Funds Requested: $150,000. Total Project Cost: $300,000. To replace record playback videotape system with a video file server.

File No. 98110CTB University of New Mexico, KNME–TV, 1130 University Blvd. NE, Albuquerque, NM 87102. Contact: Mr. Jon Cooper, General Manager. Funds Requested: $102,375. Total Project Cost: $188,800. To replace 8 TV translators at Sunetha, CO, Pagosa Springs, CO, Mora, NM, Carrizozo, NM, Capulin/Des Moines, NM, Eagle Nest, NM, Gallina, NM, and Noolan/Wooton, NM.

File No. 98206PTB University of New Mexico, KNME–TV, 1130 University Boulevard NE, Albuquerque, NM 87102. Contact: Mr. Jon Cooper, General Manager. Funds Requested: $130,000. Total Project Cost: $237,868. To plan for the conversion to digital broadcasting of KNME–TV, Albuquerque; KENW–TV, Portales and KRWG–TV, Las Cruces.

Nevada

File No. 98063ICTBN Clark County School District, Station KLVX–TV, 4210 Channel 10 Drive, Las Vegas, NV 89119. Contact: Mr. Thomas Axtell, General Manager. Funds Requested: $432,500. Total Project Cost: $666,028. To add four channels to its present eight-channel ITFS system. The project would also replace camera pedestals, heads, and color monitors for the station's broadcast operation.

File No. 98237CRB Nevada Public Radio Corporation, KNPR–FM, 5151 Boulder Highway, Las Vegas, NV 89122. Contact: Mr. Lamar Marchese, Pres./ Gen. Mgr. Funds Requested: $157,188. Total Project Cost: $209,585. To construct a new station in Lund, 88.7 MHz, which will repeat KNPR–FM but will have local origination capacity and an FM translator in Ely, 89.5 MHz.

File No. 98194CRB Shoshone-Paiute Tribes/Duck Valley, P.O. Box 219, Idaho/Nevada, Highway #51, Owyhee, NV 89832. Contact: Mr. Herman Atkins, Tribal Administrator. Funds Requested: $311,426. Total Project Cost: $415,235. To activate a new noncommercial FM radio station on 88.3 MHz, in Owyhee. The station will carry the signal of KNBA–FM, Anchorage, Alaska (provided by satellite) and will have 4 hours/day of local programming.

File No. 98013CRB University of Nevada, Reno, Mail Stop 294, Reno, NV 89557. Contact: Ms. Mary Husemoller, Director of Sponsored Projects. Funds Requested: $72,339. Total Project Cost: $96,452. To construct FM translators operating on 90.7 MHz in Ely, NV, 88.3 MHz, in Lund, NV, 88.3 MHz in Cedarville, CA, and 89.5 MHz in Quincy, CA and relocate existing FM translator K210AK from Incline Village, NV to Tahoe City, CA. The translators will rebroadcast programming from KUNR(FM).

New York

File No. 98022CTB Long Island Educational TV Council, WLIW–21, Channel 21 Drive, Plainview, NY 11803. Contact: Mr. Terrel Cass, President & General Manager. Funds Requested: $415,127. Total Project Cost: $830,255. To replace the transmitter and associated testing equipment.

File No. 98201CTB Mountain Lake Public T/C Council, One Sesame Street, Plattsburgh, NY 12901. Contact: Mr. Howard Lowe, President and General Manager. Funds Requested: $142,188. Total Project Cost: $189,585. To replace a transmitter remote control system, and 10 videotape machines with digital units.

File No. 98042CRB Niagara Frontier Radio Readg Servic, 15 Industrial Parkway, Cheektowaga, NY 14227. Contact: Mr. Robert Sikorski, President. Funds Requested: $50,032. Total Project Cost: $100,065. To replace studio equipment, including a control console, tape decks and CD players and purchase 350 SCA and TV SAP radio reading receivers.

File No. 98100CRB Northeast Public Radio, WAMC, 318 Central Avenue, Albany, NY 122062522. Contact: Mr. David Galletly, Assistant Executive Director. Funds Requested: $94,852. Total Project Cost: $189,705. To replace production and master control equipment, including a digital hard-drive system, cassette decks, cart machines and a work station.

File No. 98118ICTN Oswego County BOCES, 179 County Route 64, Mexico, NY 13114. Contact: Mr. Frank House, Ex. Dir./ Instr Support Srvs. Funds Requested: $513,900. Total Project Cost: $685,200. To install video classrooms at 12 sites located throughout Oswego and Fulton Counties.

File No. 98026CTB Pub Bdcstg Council of Central NY, 506 Old Liverpool Road P.O. Box 2400, Syracuse, NY 13220. Contact: Mr. John Duffy, Chief Engineer. Funds Requested: $75,000. Total Project Cost: $150,000. To replace a video server.

File No. 98079CTB St. Lawrence Valley, Ed. TV Council, 1056 Arsenal Street, Watertown, NY 13601. Contact: Mr. Thomas Hanley, President and General Manager. Funds Requested: $54,950. Total Project Cost: $109,900. To replace four 1-inch VTR's with digital units.

File No. 98112CRB The Pacifica Foundation, WBAI Radio, 505 Eighth Avenue 19th Floor, New York City, NY 10018. Contact: Ms. Valerie van Isler, Station Manager. Funds Requested: $71,975. Total Project Cost: $143,949. To replace a mixing console, digital cart system, DAT recorders, router/switcher, CD players and a digital audio work station.

File No. 98190CTB WMHT Educational Telecommunications, P.O Box 17 17 Fern Avenue Schenectady, NY 12301. Contact: Ms. Elizabeth Hood, Director of Administration. Funds Requested: $381,600. Total Project Cost:

$763,200. To construct a Ku-band digital satellite uplink.

File No. 98189CRB WMHT Educational Telecommunications, P.O. Box 17, 17 Fern Avenue Schenectady, NY 12301. Contact: Ms. Elizabeth Hood, Director of Administration. Funds Requested: $53,875. Total Project Cost: $107,750. To replace audio record/play equipment with an audio server system to be used by WMHT–FM and by RISE, the station's radio reading service.

File No. 98155CRB WNYC Radio, WNYC AM 820 and 93.9 FM, One Centre Street, 24th Floor New York, NY 10007. Contact: Mr. Ken Dinitz, Manager For External Relations. Funds Requested: $75,349. Total Project Cost: $150,698. To replace analog cart machines with a hard-drive based digital audio system.

File No. 98153CTB WXXI Public Broadcasting Council, WXXI–TV 280 State Street Rochester, NY 14614. Contact: Mr. Norm Silverstein, President & CEO. Funds Requested: $200,000. Total Project Cost: $400,000. To replace master control equipment by purchasing a digital routing switcher, a video server and a transmitter remote control system.

Ohio

File No. 98123CTB Bowling Green State University, WBGU–TV 245 Troup St. Bowling Green, OH 43403. Contact: Mr. Patrick Fitzgerald, General Manager. Funds Requested: $243,446. Total Project Cost: $486,893. To replace three cameras and associated equipment.

File No. 98037CRB Cincinnati Classical Public Radio, 1223 Central Parkway Cincinnati, OH 45214. Contact: Ms. Cathy Beltz-Williams, Business Manager. Funds Requested: $10,480. Total Project Cost: $20,960. To replace the stations fiber optic STL with a wireless system.

File No. 98036CRB Cincinnati Classical Public Radio, 1223 Central Parkway Cincinnati, OH 45214–2889. Contact: Ms. Cathy Beltz-Williams, Business Manager. Funds Requested: $13,050. Total Project Cost: $26,100. To replace selected items of master control equipment, including patchbays and an audio routing system.

File No. 98035CRB Cincinnati Classical Public Radio, WGUC (FM) 1223 Central Parkway Cincinnati, OH 45214–2889. Contact: Ms. Cathy Beltz-Williams, Business Manager. Funds Requested: $35,981. Total Project Cost: $71,963. To replace a transmitter and support equipment.

File No. 98163CTN Columbus Community Cable Access, Inc. 394 Oak Street, Columbus, OH 43215. Contact: Ms. Patricia N. Williamsen, Executive Director. Funds Requested: $51,180. Total Project Cost: $102,360. To replace cameras at a cable access facility.

File No. 98069CTB ETV Assn of Metropolitan Cleveland, WVIZ 4300 Brookpark Rd., Cleveland, OH 44134. Contact: Mr. Jerry Wareham, President/CEO. Funds Requested: $477,280. Total Project Cost: $1,193,200. To replace studio and field cameras and an off-line editing system.

File No. 98182CTB Greater Dayton Public Television, WPTD 110 South Jefferson Street Dayton, OH 45402–2415. Contact: Mr. David Fogarty, President and General Manager. Funds Requested: $358,363. Total Project Cost: $716,727. To replace three camera systems, a routing switcher, a character generator, and a hard disk video server system.

File No. 98115CRB Miami University, WMUB Williams Hall— Second Floor, Spring and Oak Streets Oxford, OH 45056. Contact: Dr. Cleve Callison, General Manager. Funds Requested: $51,800. Total Project Cost: $103,600. To replace an STL and purchase a networked hard disc audio recording and editing system, an audio console, CD players, and microphone processors.

File No. 98211CTB NE Educational Television of Ohio, WNEO/WEAO 1750 Campus Center Drive Kent, OH 44240. Contact: Mr. William Glaeser, President and General Mgr. Funds Requested: $435,549. Total Project Cost: $871,099. To replace a transmitter, remote control, and monitoring equipment.

File No. 98213CTB Ohio State University, WOSU Stations 2400 Olentangy River Road Columbus, OH 43210. Contact: Mr. Thomas Lahr, Engineering Manager. Funds Requested: $68,073. Total Project Cost: $136,146. To replace a video switcher and video tape machines and acquire a small automation system.

File No. 98229CRB Ohio State University, WOSU Stations 2400 Olentangy River Road Columbus, OH 43210. Contact: Mr. Sam Eiler, Radio Station Manager. Funds Requested: $37,950. Total Project Cost: $75,900. To replace an audio console and associated equipment and the remote control and antenna monitor to improve WOSU–AM's nighttime signal.

File No. 98014CTB Ohio University, WOUB–TV Telecommunication Center 9 South College Street Athens, OH 45701. Contact: Mr. Paul Witkowski, Associate Director. Funds Requested: $257,400. Total Project Cost: $514,800. To replace video recording, playback, and storage systems, and acquire test equipment.

File No. 98089CTB Public Bdcstng Fndn of NW Ohio, WGTE–TV 136 Huron Street Toledo, OH 43604. Contact: Mr. Daniel Niedzwiecki, Director Of Engineering. Funds Requested: $90,000. Total Project Cost: $180,000. To replace a studio lighting system and microwave relay system that connects the station's satellite receiving dish with its studio facilities.

File No. 98088CRB Public Bdcstng Fndn of NW Ohio, WGTE–FM 136 Huron Street Toledo, OH 43604. Contact: Mr. Daniel Niedzwiecki, Director of Engineering. Funds Requested: $85,000. Total Project Cost: $170,000. To activate a repeater on 91.9 MHz in Defiance, OH.

File No. 98039CRB Xavier University, WVXU 3800 Victory Parkway Cincinnati, OH 45207. Contact: Dr. James King, Executive Director/GM. Funds Requested: $99,555. Total Project Cost: $132,740. To replace the tower, antenna, and transmission line of WMLQ, 96.7 MHz, Rogers City, MI, which is licensed to WVXU and repeats *is* programming.

Oklahoma

File No. 98121CTB Oklahoma Educational TV Authority, 7403 North Kelley Avenue Post Office Box 14190 Oklahoma City, OK 73113. Contact: Mr. Malcolm Wall, Assoc. Executive Director. Funds Requested: $452,833. Total Project Cost: $905,666. To replace 700 miles of microwave interconnection with a digital Ku-band satellite delivery system to provide dual channel service to the 4 full-power stations and 15 translator stations in the state system.

File No. 98081ICTN Oklahoma State University, Educational Television Services 100 Telecommunications Center, Stillwater, OK 74078. Contact: Dr. Glade Presnal, Senior Project Manager. Funds Requested: $234,481. Total Project Cost: $468,962. To install a video bridge and video server on the main campus of Oklahoma State University, Stillwater to support additional course offerings via compressed video and the Internet.

File No. 98157PRB University of Oklahoma, KGOU Radio 780 Van Vleet Oval Norman, OK 73019. Contact: Ms. Karen Holp, General Manager. Funds Requested: $9,800. Total Project Cost: $13,291. To plan for a new public radio station which will provide first service to western Oklahoma.

Oregon

File No. 98185PTN Oregon ED–NET, 6720 SW Macadam Ave., Suite 290 Portland, OR 97219. Contact: Ms. Andrea LaFayette, Client Communications. Funds Requested: $74,870. Total Project Cost: $251,559. To digitize an uplink at Eastern Oregon University, La Grande, OR, purchase 56

digital receivers, and fund network control equipment in Portland which will extend ED–NET services to eastern Oregon.

File No. 98207CTB Oregon Public Broadcasting, 7140 SW Macadam Avenue Portland, OR 97219. Contact: Ms. Deborah Hinton, Sr. Vice President. Funds Requested: $499,750. Total Project Cost: $999,500. To improve the facilities of KOPB–TV, Portland, by purchasing a video server, digital routing switcher, 4 channel SDTV encoder and automation system.

File No. 98102CTB Southern Oregon Public Television, 34 South Fir Street Medford, OR 97501. Contact: Mr. William Campbell, President/CEO. Funds Requested: $313,755. Total Project Cost: $627,510. To upgrade master control through the installation of an automation/video server system and new character generator.

File No. 98044CRB Tillicum Foundation, KMUN–FM P.O. Box 269 1445 Exchange Astoria, OR 97103. Contact: Mr. Charles Sweet, Station Manager. Funds Requested: $84,918. Total Project Cost: $113,224. To replace the station's transmitter, antenna, studio-transmitter link, audio consoles, and routing switcher.

Pennsylvania

File No. 98086ICTN Crawford Co. Development Corp., 18257 Industrial Drive Meadville, PA 16335. Contact: Mrs. Maryann Martin, Director, Grant Administration. Funds Requested: $200,000. Total Project Cost: $423,339. To establish a distance learning system.

File No. 98108CRB Duquesne University, WDUQ (FM) Duquesne University Pittsburgh, PA 15282. Contact: Mr. Scott Hanley, Director/General Manager. Funds Requested: $105,292. Total Project Cost: $215,292. To replace the station's transmitter.

File No. 98067CTB Independence Public Media, WYBE–TV 6070 Ridge Avenue Philadelphia, PA 19128. Contact: Ms. Sherri Culver, General Manager. Funds Requested: $467,400. Total Project Cost: $623,200. To replace videotape recorders, video switchers and a character generator.

File No. 98049CTB Penn State, WPSX (TV) 102 Wagner Building University Park, PA 168023899. Contact: Mr. Mark Erstling, General Manager. Funds Requested: $44,111. Total Project Cost: $88,223. To replace four 1″ videotape recorders with digital recorders.

File No. 98197CTB WITF, Inc., Station WITF–TV 1982 Locust Lane P.O. Box 2954 Harrisburg, PA 17105. Contact: Mr. Gregory Poland, Sr. VP & CFO. Funds Requested: $1,235,992. Total Project Cost: $1,647,990. To purchase transmission, studio, local insertion, and test equipment that would allow the station to commence digital television operations.

File No. 98048CTB WQED Pittsburgh, WQED–TV 4802 Fifth Avenue Pittsburgh, PA 15213. Contact: Mr. Jeffrey Rutkowski, Director of Administration. Funds Requested: $105,998. Total Project Cost: $211,997. To replace 1″ videotape recorders with digital recorders, as well as purchase digital camcorders and field audio and lighting packages.

South Dakota

File No. 98151IPTN Black Hills State University, Office of Extended Services 1200 University Spearfish, SD 57799. Contact: Ms. Amy Jennings, Instruct'l Technology Support. Funds Requested: $88,983. Total Project Cost: $127,828. To plan the establishment of a telecommunications infrastructure for the delivery of higher education instruction and services.

File No. 98030ICTN Montrose School District 43–2, 112 Church Street Montrose, SD 57048. Contact: Ms. Connie Colwill, Chief Executive Officer. Funds Requested: $663,295. Total Project Cost: $1,149,745. To purchase a Multipoint Control Unit and a CODEC to interconnect 10 high schools in eastern South Dakota and the Earth Resources Observations Systems, a unit of the U.S. Geological Survey, Sioux Falls.

File No. 98200CRB Sisseton Wahpeton Community College, Agency Village, Box 689 Sisseton, SD 57262–0689. Contact: Mr. Elden Lawrence, President. Funds Requested: $57,112. Total Project Cost: $76,150. To locate a tower on a higher, more advantageous site.

Tennessee

File No. 98094CTB East Tennessee Public Communications, WSJK–TV 1611 E. Magnolia Ave. Knoxville, TN 37917. Contact: Mr. Jim Tindell, President/CEO. Funds Requested: $54,734. Total Project Cost: $109,468. To replace a transmitter remote control system, parallel transmitter exciter system and a power amplifier refurbishment kit.

File No. 98164PRB Fisk University, WFSK/Humanities And Fine Arts 1000 17th Avenue North Nashville, TN 37208. Contact: Mrs. Delores London, Director, Budgets & Grants. Funds Requested: $20,973. Total Project Cost: $26,198. To plan for the use of commercial quality high technology and more efficient methods of programming and marketing.

File No. 98235ICTN Memphis City Schools, 2597 Avery Avenue, Room 208 Memphis, TN 38112. Contact: Ms. Mary Korff, Interim Grant Writer. Funds Requested: $600,000. Total Project Cost: $1,353,356. To establish a distance learning system for the City of Memphis, TN, by interconnecting seven elementary schools. The system would use ATM/AMX technology.

File No. 98169CRB 97072, 96120 Memphis/Shelby Cty Public Library, WYPL–FM 1850 Peabody Avenue Memphis, TN 38104. Contact: Mr. Steven Terry, General Manager/CE. Funds Requested: $160,717. Total Project Cost: $401,792. To extend the signal of public radio station WYPL–FM, by relocating the transmitter and increasing the station's power.

File No. 98137CTB Mid-South Pub. Comm. Fdtn., WKNO–TV 900 Getwell Road Memphis, TN 38111. Contact: Mr. Michael LaBonia, President & CEO. Funds Requested: $301,880. Total Project Cost: $603,760. To replace three studio cameras with digital cameras.

File No. 98168CRB University of Tennessee/Chattanooga, WUTC–FM 104 Cadek Hall 615 McCallie Avenue Chattanooga, TN 37343. Contact: Dr. John McCormack, Director. Funds Requested: $14,342. Total Project Cost: $28,685. To purchase a propane backup electric generator.

Texas

File No. 98033CTB Alamo Public T/C Council, KLRN 501 Broadway San Antonio, TX 78215. Contact: Mr. Charles Vaughn, Sr. VP Telecommunications. Funds Requested: $88,555. Total Project Cost: $177,111. To replace video monitors and two field production cameras and related equipment.

File No. 98004CTB Capital of Texas Public T/C Council, KLRU–TV 2504–B Whitis Street Austin, TX 78705. Contact: Mr. Bill Arhos, President. Funds Requested: $397,567. Total Project Cost: $795,135. To replace origination equipment with a digital video routing/master control switcher and associated equipment and two digital portable/studio cameras.

File No. 98170CTB Central Texas College, 6200 W. Central Texas Expressway Killeen, TX 76542. Contact: Mr. L. Max Rudolph, General Manager. Funds Requested: $476,250. Total Project Cost: $635,000. To replace analog video tape machines and tube-type studio cameras at KNCT with 3 digital cameras, triax cable, digital video recording equipment and other related origination equipment.

File No. 98198CTB North Texas Public Broadcasting, 3000 Harry Hines

Boulevard Dallas, TX 75201. Contact: Ms. Cheryl Craigie, President & CEO. Funds Requested: $497,333. Total Project Cost: $994,666. To permit KETA–TV to remain on its existing tower through the sharing of the cost of a new digital television (DTV) antenna with a commercial broadcaster.

File No. 98161CRB Texas Southern University, KTSU–FM 3100 Cleburne Avenue Houston, TX 77004. Contact: Mr. George Thomas, Station Manager. Funds Requested: $25,107. Total Project Cost: $33,476. To replace the station's antenna, coax line and associated equipment.

File No. 98239ICTN United Star Dist. Learn. Consortium, 3305 N. 3rd., #307 Abilene, TX 79603. Contact: Ms. Glenda Mathis, Executive Director. Funds Requested: $509,929. Total Project Cost: $2,039,717. To expand the StarNet distance learning network via purchase of: digital satellite downlinks for 671 schools in over 40 states; a satellite uplink for Education Service Center Region 20 in San Antonio, TX; digital encoders for Western Illinois University in Macomb, IL, and the Agency for Public Telecommunications in Raleigh, NC.

File No. 98060CRB University of Houston, KUHF–FM Radio 3801 Cullen Blvd. Communications Bldg. Room 101 Houston, TX 77004. Contact: Mr. John Proffitt, General Manager & CEO. Funds Requested: $221,193. Total Project Cost: $442,387. To relocate the station to a different tower because it is being displaced due to the digital television conversion by the commercial licensee who owns the existing tower. Project will acquire a new transmitter, remote control, and related dissemination equipment.

File No. 98192CTB University of Houston, Houston Public Television 4513 Cullen Blvd. Houston, TX 77004. Contact: Mr. Jeff Clarke, CEO & General Manager. Funds Requested: $421,238. Total Project Cost: $1,053,094. To purchase a digital fiber link, digital master control switcher and encoding equipment, 3 digital camera packages, and digital test equipment.

File No. 98196CRB University of Texas at Austin, KUT Radio Communication Building B Austin, TX 78712. Contact: Mr. Dana Whitehair, Manager-Technical Operations. Funds Requested: $38,435. Total Project Cost: $76,870. To purchase an on-air phone system, master clock system, CD players, DAT recorders, desktop digital audio editors, digital audio recorders and other similar origination equipment as well as digital ready unit STL unit.

Utah

File No. 98238CRB Listeners Community Radio of Utah, KRCL–FM 208 West 800 South Salt Lake City, UT 84101. Contact: Mr. John Bortel, Pres. & General Manager. Funds Requested: $203,406. Total Project Cost: $271,209. To replace the station's transmitter, studio-to-transmitter link, a variety of origination equipment and acquire a new satellite dish and a spectrum analyzer.

File No. 98120CRB Utah State University, Utah Public Radio/KUSU–FM 8505 University Blvd. Logan, UT 84322. Contact: Mr. Bryan Earl, Director of Development. Funds Requested: $11,512. Total Project Cost: $15,350. To activate a new translator on 91.5 MHz in Vernal/Uintah.

Virginia

File No. 98065ICTN Franklin County Public Schools, 25 Bernard Road, Rocky Mount, VA 24151. Contact: Dr. Tammy McGraw, Coord. of Instr'l. Technology. Funds Requested: $167,325. Total Project Cost: $223,100. To construct an video classroom to be linked via ATM with Net.Work.Virginia, which links 200 educational institutions across Virginia.

File No. 98191CRB Greater Washington Ed. T/C Assoc., Station WETA–FM 2775 S. Quincy Street Arlington, VA 22206. Contact: Mr. John Hoehn, Chief Engineer. Funds Requested: $359,999. Total Project Cost: $479,999. To activate a repeater station in Leonardtown, Maryland, operating on 91.7 MHz.

File No. 98228CTB Greater Washington Ed. T/C Assoc., Station WETA–TV 2775 S. Quincy Street Arlington, VA 22206. Contact: Mr Lewis Zager, Director, Technical Services. Funds Requested: $468,750. Total Project Cost: $625,000. To purchase two digital encoders, one for the applicant station and one for public television station KCTS, Seattle, WA to conduct diverse tests and planning in the use of multicasted digital signals.

File No. 98218ICTN Old Dominion University, Academic Television Services Room 228 Education Building Norfolk, VA 23529. Contact: Dr. Anne Savage, Assoc. VP for Academic Affairs. Funds Requested: $464,486. Total Project Cost: $928,972. To expand the applicant's distance learning system using ATM and MPEG2 technology to three additional sites in the Hampton Roads Metropolitan area.

Vermont

File No. 98058CTB Vermont ETV, Inc., 88 Ethan Allen Avenue Colchester, VT 05446. Contact: Mr. Wayne Rosberg, Vice President. Funds Requested: $698,886. Total Project Cost: $1,397,774. To replace a statewide microwave system.

File No. 98245CRB Vermont Public Radio, 20 Troy Avenue Colchester, VT 05446. Contact: Ms. Cindy Shuman, Vice-President. Funds Requested: $215,723. Total Project Cost: $431,447. To relocate and replace the transmitter, antenna and STL of WVPS–FM, 107.9 MHz in Colchester. On its present tower, the station cannot meet new FCC Radio Frequency Radiation guidelines.

Washington

File No. 98234CTB 97056 Bates Technical College, 1101 Yakima Avenue South Tacoma, WA 98405. Contact: Ms. Debbie Emond, General Manager. Funds Requested: $437,829. Total Project Cost: $583,773. To activate a full power satellite station of KBTC–TV in Tacoma, in Bellingham, operating on Channel 34.

File No. 98141ICTN City of Tacoma, Communications Division 747 Market Street Tacoma, WA 98402. Contact: Ms. Leslie Rowen, General Services Director. Funds Requested: $1,906,101. Total Project Cost: $3,491,482. To assist the City of Takoma in constructing a fiber-optic infrastructure needed to develop a city-wide Institutional Network (I-Net).

File No. 98078CTB KCTS Television, Channel 9/Channel 41 401 Mercer Street Seattle, WA 98101. Contact: Mr. Burnill Clark, President & CEO. Funds Requested: $1,354,295. Total Project Cost: $2,083,530. To convert KCTS to digital broadcasts by purchasing a DTV transmitter, converting its existing microwave path to digital to carry both the NTSC and DTV feeds to the transmitter; replacing the antenna and the transmission line; purchasing a combiner and splitter with digital capability and purchasing encoders for both SDTV and HDTV.

File No. 98077CRB KSER Foundation, 14920 Highway 99, #150 Lynnwood, WA 98037. Contact: Mr. Edward Bremer, Station Manager. Funds Requested: $52,992. Total Project Cost: $70,657. To relocate the station transmitter and antenna, install an STL, and increase station power from 1000 to 5750 watts.

File No. 98070CRB Northwest Communities' Ed. Center, 121 Sunnyside Avenue P.O. Box 800 Granger, WA 98932. Contact: Mr. Ricardo Garcia, Executive Director. Funds Requested: $38,194. Total Project Cost: $50,925. To replace the station transmitter.

File No. 98180IPTN Northwest Indian College, 2522 Kwina Road Bellingham, WA 98226. Contact: Dr. Robert Lorence,

President. Funds Requested: $74,568. Total Project Cost: $94,132. To conduct a programming and equipment needs analysis centered on the delivery of post-secondary educational services to all interested American Indian Reservations in Washington, Oregon, Idaho and Southeast Alaska.

File No. 98024CRB, 97073 Washington State University, Educational T/C & Technology 382 Murrow Center PO Box 642530 Pullman, WA 991642530. Contact: Mr. Dennis Haarsager, Associate VP & General Manager. Funds Requested: $119,280. Total Project Cost: $159,040. To activate two repeater stations one in Chehalis, operating on 88.9 MHz and one in Mt. Vernon, operating on 91.7 MHz.

File No. 98205PRB Yakama Indian Nation, Economic Development 401 Fort Road Toppenish, WA 98948. Contact: Mr. Lawrence SpottedBird, Economic Development Director. Funds Requested: $60,280. Total Project Cost: $72,669. To plan for the construction of a radio station.

Wisconsin

File No. 98166CRB Backporch Radio Broadcasting, WORT (FM) 118 South Bedford Street Madison, WI 53703. Contact: Ms. Cindy Fesemyer, Business & Fdn. Development. Funds Requested: $25,000. Total Project Cost: $50,759. To replace an analog STL system with a digital system and a remote pick up unit with new equipment.

File No. 98217CRB Educational Communications Board, 3319 West Beltline Highway Madison, WI 53713–4296. Contact: Mr. Thomas Fletemeyer, Executive Director. Funds Requested: $204,188. Total Project Cost: $272,251. To extend Wisconsin Public Radio to Ashland by constructing translators operating on 102.9 MHz and 104.7 MHz. One facility will broadcast programming from the Wisconsin Ideas Network, the other from the NPR News and Classical Music Network. The applicant intends to upgrade both translators to Class A stations in the future.

File No. 98125CTB Milwaukee Area Technical College, WMVS/WMVT 1036 North 8th Street Milwaukee, WI 53233. Contact: Mr. W. Bryce Combs, General Manager. Funds Requested: $788,894. Total Project Cost: $1,577,788. To replace the transmitter, antenna and transmission line.

File No. 98097CTB University of Wisconsin, WHA Television—Green Bay 821 University Avenue Madison, WI 53706. Contact: Mr. Larry Dickerson, Director, Comm & Info Technolo. Funds Requested: $40,450. Total Project Cost: $80,900. To replace VHS editing equipment with digital workstations.

File No. 98175IPTN Wisconsin Educ. Comm. Board, 3319 West Beltline Highway Madison, WI 53713–4296. Contact: Mr. Thomas Fletemeyer, Executive Director. Funds Requested: $55,452. Total Project Cost: $81,366. To plan how best to deliver instructional video programs and segments of programs to classrooms on demand.

West Virginia

File No. 98171ICTN 97047 Bluefield State College, 219 Rock Street Bluefield, WV 24701. Contact: Ms Annette Osborne, Dir./ Instit. Advanc. & Plng. Funds Requested: $153,768. Total Project Cost: $205,025. To purchase video classroom equipment and CODECs to allow the applicant to extend its distance learning system.

File No. 98167CRB Clay County Communications, Ltd., 15 Falling Rock Road Clendenin, WV 25045. Contact: Mr. Delbert Davis, President. Funds Requested: $139,432. Total Project Cost: $185,910. To activate a community radio station in Clendenin, operating on 89.3 MHz.

File No. 98109CTB WV Ed Broadcasting Authority, Station WPBY–TV 600 Capitol Street Charleston, WV 25301. Contact: Mr. Bill Acker, General Manager. Funds Requested: $518,327. Total Project Cost: $1,036,654. To replace a studio lighting system, two production switchers, production character generators, video servers and nonlinear editors at studios in Nitro, Morgantown, Beckley and Huntington.

Pan-Pacific Education and Communications Experiments by Satellite (PEACESAT) applications.

File No. 98244 University of Hawaii, Social Science Research Institute, 2530 Dole St., Honolulu, HI 96822. Contact: Dr. Norman H. Okamura. Funds Requested: $445,745. Total Project Cost: $574,220. To support continued operations of the PEACESAT network headquarters to operate the satellite and provide program service to the 22 Pacific Island nations/entities participating in the PEACESAT Project. The project would also secure use of the GOES–7 satellite to ensure continued satellite services for the next decade.

Bernadette McGuire-Rivera,

Associate Administrator, Office of Telecommunications and Information Applications.

[FR Doc. 98–13983 Filed 5–26–98; 8:45 am]

BILLING CODE 3510–60–P

Reader Aids

Federal Register

Vol. 63, No. 101

Wednesday, May 27, 1998

CUSTOMER SERVICE AND INFORMATION

Federal Register/Code of Federal Regulations

General Information, indexes and other finding aids	**202–523–5227**
Laws	**523–5227**
Presidential Documents	
Executive orders and proclamations	**523–5227**
The United States Government Manual	**523–5227**
Other Services	
Electronic and on-line services (voice)	**523–4534**
Privacy Act Compilation	**523–3187**
Public Laws Update Service (numbers, dates, etc.)	**523–6641**
TTY for the deaf-and-hard-of-hearing	**523–5229**

ELECTRONIC RESEARCH

World Wide Web

Full text of the daily Federal Register, CFR and other publications:

http://www.access.gpo.gov/nara

Federal Register information and research tools, including Public Inspection List, indexes, and links to GPO Access:

http://www.nara.gov/fedreg

E-mail

PENS (Public Law Electronic Notification Service) is an E-mail service that delivers information about recently enacted Public Laws. To subscribe, send E-mail to

listproc@lucky.fed.gov

with the text message:

subscribe publaws-l <firstname> <lastname>

Use listproc@lucky.fed.gov only to subscribe or unsubscribe to PENS. We cannot respond to specific inquiries at that address.

Reference questions. Send questions and comments about the Federal Register system to:

info@fedreg.nara.gov

The Federal Register staff cannot interpret specific documents or regulations.

FEDERAL REGISTER PAGES AND DATES, MAY

24097–24382 1
24383–24738 4
24739–24910 5
24911–25152 6
25153–25386 7
25387–25746 8
25747–26062 11
26063–26420 12
26421–26710 13
26711–26954 14
26955–27192 15
27193–27438 18
27439–27662 19
27663–27814 20
27815–28216 21
28217–28474 22
28475–28888 26
28889–29088 27

CFR PARTS AFFECTED DURING MAY

At the end of each month, the Office of the Federal Register publishes separately a List of CFR Sections Affected (LSA), which lists parts and sections affected by documents published since the revision date of each title.

3 CFR

Proclamations:
7088 24383
7089 25145
7090 25147
7091 25149
7092 25151
7093 26415
7094 26711
7095 27191
7096 27663
7097 27813
7098 28887
7099 28889

Executive Orders:
9080 (Amended by EO 13082) 26709
10692 (See EO 13082) 26709
12377 (See EO 13082) 26709
13081 24385
13082 26709
13083 27651
13084 27655

Administrative Orders:
Notices:
Notice of May 18, 1998 27661
Presidential Determinations:
No. 98–21 of April 28, 1998 26419
No. 98–22 of May 13, 1998 27665

5 CFR

351 26421
630 26421
890 28891
1605 24380

Proposed Rules:
351 26531

7 CFR

301 .....25153, 25747, 25748, 27439
723 26713
925 28475
944 28475
979 25387
982 27815
1205 27818
3017 27667

Proposed Rules:
1 24467
59 27502
210 .....24686, 25569, 27162
220 .....24686, 25569, 27162
271 .....24985, 26250
273 27511
274 27511
278 .....24985, 26250
279 .....24985, 26250
735 28488
958 26999
1160 28292
1710 24995
1714 24995
3015 28294
3016 28294
3019 28294

8 CFR

3 .....27441, 27823
213 27193
236 27441
240 27823
245 27823
274a 27823
299 27823

9 CFR

Proposed Rules:
93 26099
130 .....24473, 29061

10 CFR

11 25156
25 25156
60 26955
72 26955
73 26955
74 26955
75 26955
430 25996
1703 27667

Proposed Rules:
70 27870
835 28495

12 CFR

Ch. III 25157
330 25750
Ch. VII 24097
703 24103
704 24103
960 27668
1720 26063

Proposed Rules:
922 26532
931 26532
933 26532
934 26532
935 25718
938 25718
941 26532
970 25718

13 CFR

120 24739

Proposed Rules:
120 .....24753, 27219

14 CFR

11 25572

21 26422
25 29070
27 26422
36 26063
39 ....24210, 24387, 24389, 24740, 24742, 24911, 24913, 24914, 24915, 25158, 25389, 26063, 26425, 26426, 26427, 26429, 26439, 26714, 26964, 26966, 26968, 27195, 27197, 27450, 27452, 27455, 27465, 27674, 27676, 27834, 28217, 28218, 28481, 28482, 28484
71 ....24389, 24390, 24744, 24745, 26445, 26446, 26447, 26448, 26449, 26450, 26451, 26969, 26970, 26971, 26972, 26973, 26974, 26975, 26976, 26977, 26978, 27199, 27474, 27476, 27477, 27478, 27479, 27480, 28891
91 26684
95 27205
97 ....25160, 25161, 28220, 28222, 28224
135 25572
207 28225
208 28225
212 28225
380 28225

Proposed Rules:
39 ....24136, 24138, 24756, 24758, 24760, 24762, 25179, 25180, 25182, 25781, 25787, 26100, 26102, 26104, 26106, 26107, 26109, 26111, 26112, 26742, 27001, 27002, 27011, 27514, 27516, 27685, 27687, 27688, 27690, 27692, 27694, 27696, 27870, 27872, 28294, 28299
71 ....24140, 24500, 24764, 24995, 27012, 27013, 27014, 27015, 27160, 27519, 29061
91 ....27876, 29061
108 26706
150 ....27876, 29061

15 CFR

270 24917
902 ....27481, 27485
911 24917
921 26716

16 CFR

260 24240

Proposed Rules:
Ch. I 24996
1615 ....27877, 27885
1616 ....27877, 27885

17 CFR

4 24390

Proposed Rules:
1 24142
34 26114
35 26114
423 25417

18 CFR

Proposed Rules:
161 27526
385 27529

19 CFR

101 24746
191 27489
351 24391
354 24391

Proposed Rules:
123 27533

20 CFR

404 24927
416 24927

21 CFR

3 26690
5 ....26690, 27207
10 26690
16 26690
25 26690
50 26690
56 26690
58 26690
71 26690
101 ....26717, 26978
165 25764
178 27835
184 ....24416, 28893
200 26690
201 ....26690, 27836
207 26690
210 26690
211 26690
310 26690
312 26690
314 26690
315 28301
369 26690
430 26066
431 26066
432 26066
433 26066
436 26066
440 26066
441 26066
442 26066
443 26066
444 26066
446 26066
448 26066
449 26066
450 26066
452 26066
453 26066
455 26066
460 26066
510 ....24105, 25163, 26981, 27844
520 26981
522 ....24106, 24420, 26981
524 26981
529 ....24105, 25163
556 24106
558 ....24420, 26719, 27844
601 28301
800 26690
801 24934
803 26069
804 26069
812 26690
1240 26077

Proposed Rules:
3 26694
5 26694
10 26694
16 26694
25 26694
50 26694
56 26694
58 26694
71 26694
100 27502
101 ....24253, 24593, 27016
120 24253
165 25789
200 26694
201 26694
207 ....26694, 26744
210 26694
211 26694
310 26694
312 26694
314 26694
334 27886
369 26694
429 26694
430 26127
431 26127
432 26127
433 26127
436 26127
440 26127
441 26127
442 26127
443 26127
444 26127
446 26127
449 26127
450 26127
452 26127
453 26127
455 26127
460 26127
800 26694
803 26129
804 26129
807 26744
812 26694
874 25794
1271 26744

22 CFR

41 24107

23 CFR

Proposed Rules:
658 27228

24 CFR

982 27434
3280 26386

Proposed Rules:
6 26022
180 26022
200 26702
203 24736
207 26702
570 26022
888 24846
3280 26392

26 CFR

Proposed Rules:
1 ....24765, 25796, 27534, 28958

27 CFR

Proposed Rules:
4 27017

28 CFR

2 ....25769, 25770, 25771
51 24108

29 CFR

4044 26982
4231 24421

Proposed Rules:
1910 24501
Ch. XVII 27698
2700 25183

30 CFR

56 28485
57 28485
75 28485
100 26719
202 ....26362, 27677, 28453
203 24747
216 ....26362, 27677, 28453
250 ....26362, 27677, 28453
918 25391
920 26451

Proposed Rules:
56 ....26756, 28496
57 ....26756, 28496
62 ....26756, 28496
70 ....26756, 28496
71 ....26756, 28496
218 25187
250 25187
256 25187
917 ....27229, 27698
934 25428

31 CFR

285 25136
Ch. V 28896
515 ....27348, 27349
537 27846

Proposed Rules:
103 27230
208 26561

32 CFR

199 27677
323 25772
507 27208
701 25773
706 24747
2101 25736

33 CFR

100 ....24109, 24425, 27454
117 ....24426, 26983, 27679
165 ....24109, 24425, 25164, 27680, 27852, 29061
207 24427

Proposed Rules:
Ch. I 26756
20 27700
100 25187
117 ....27240, 27241
165 ....25189, 27019, 27243, 27893

36 CFR

223 24110

Proposed Rules:
211 27245

37 CFR

260 25394

Proposed Rules:
201 26756
256 26756

38 CFR

21 ....26455, 27853

Proposed Rules:
20 27534

21 27701

39 CFR

3 28485
241 25166

40 CFR

9 26719
51 24429
52 ....24114, 24115, 24434, 24435, 24748, 24935, 25167, 25415, 25773, 26455, 26460, 26462, 26720, 27489, 27492, 28898, 28905
60 ....24436, 27854
61 27854
62 ....24841, 27494
63 ....24116, 24436, 24749, 26078, 26463, 27212, 28906
76 24116
80 24117
81 ....24445, 24748
82 ....26983, 28251
85 24429
86 24446
148 ....24596, 28556
156 25168
180 ....24118, 24119, 24450, 24451, 24452, 24936, 24939, 24941, 24949, 24955, 25775, 26082, 26089, 26097, 26466, 26472, 26473, 26481, 26986, 28253, 28258, 28909
194 27354
261 ....24976, 24963, 28556
266 28556
268 ....24596, 28556
271 ....24453, 28556
279 24963
281 24453
300 ....25169, 27855
302 24596
721 24120

Proposed Rules:

22 25006
51 25902
52 ....25191, 25796, 26561, 26562, 26564, 27541, 27895, 27897, 28958, 28960
59 25006
60 24515
62 27542
63 ....24515, 24765, 26561, 27247, 28960
72 28032
75 28032
76 25902
81 27247
89 28309
96 25092
131 26565
136 28868
141 ....25430, 26137, 27020
142 ....25430, 27020
194 27901
258 25430
260 25430
261 ....25006, 25430, 25796
264 25430
265 25430
266 25430
270 25430
279 ....25006, 25430
300 ....28317, 28961

41 CFR

101-35 27682
Ch. 301 26488

42 CFR

60 25777
409 26252
410 ....26252, 26318
411 26252
412 26318
413 ....26252, 26318
415 26318
422 25360
424 26252
483 26252
485 26318
489 26252
493 722

Proposed Rules:

405 ....25576, 26565
412 ....25576, 26565
413 ....25576, 26565, 27251

44 CFR

64 27496
65 ....27856, 28261, 28265, 28267, 28268
67 ....28273, 28280
206 24969

Proposed Rules:

67 ....28323, 28331
206 ....24143, 25010

45 CFR

1215 26488
2507 26488

Proposed Rules:

46 27794
142 25272

46 CFR

360 28911

Proposed Rules:

Ch. I 26756
1 26566
5 27700
10 26566

47 CFR

0 ....24121, 25778
1 ....24121, 24126, 26992
43 24120
54 27857
63 24120
64 24120
68 25170
69 ....26495, 26497
73 ....24454, 24970, 26992, 26993, 27212, 27498, 27857, 27858, 27859, 28486
101 ....26502, 27625

Proposed Rules:

Ch. 1 ....26758, 27021
0 26758
1 ....26758, 28456
13 26758
22 ....26138, 26758
24 26758
26 26758
27 26758
28 26758
54 ....27542, 28339
61 25811
64 26138
73 ....24517, 24518, 27544, 27902
76 ....24145, 27545
80 26758
87 26758
90 26758
95 26758
97 26758
101 26758

48 CFR

225 28284
232 27682
252 ....27682, 28284, 28486, 29061
401 26993
402 26993
403 26993
407 26993
408 26993
409 26993
411 26993
416 26993
419 26993
422 26993
424 26993
425 26993
426 26996
432 26993
434 26993
436 26993
452 26993
970 25779
1816 28285
1842 27859
1853 27859
2802 26738
2846 26738
5243 24129
5252 24129

Proposed Rules:

1 25382
4 25382
12 25382
14 25382
19 25382
26 25382
27 25382
32 25382
41 25382
52 25382
204 25438
208 25438
213 25438
216 25438
217 25438
219 25438
223 25438
225 25438
237 25438
242 25438
246 25438
247 25438
253 25438
1609 27902

49 CFR

223 24630
232 ....24130, 27212
239 24630
365 28286
372 28286
373 28286
374 28286
375 27126
377 ....27126, 28286
393 24454
553 26508
571 ....28912, 28922
1152 28287
1155 28287

Proposed Rules:

195 27903
216 28496
223 28496
229 28496
231 28496
232 28496
238 28496
393 26759
544 24519
575 27911
1146 27253

50 CFR

17 ....25177, 26517
23 26739
229 27860
285 27862
600 ....24212, 24970, 26250, 27213
622 ....27485, 27499
648 ....25415, 27481, 27866
660 ....24970, 24973, 26250
679 ....24984, 27869

Proposed Rules:

17 ....26764, 27255, 28343, 28963
20 ....27548, 28343
217 24148
300 24751
600 ....24522, 26570
622 24522
648 ....25442, 27256, 27550
654 26765
660 27035

REMINDERS

The items in this list were editorially compiled as an aid to Federal Register users. Inclusion or exclusion from this list has no legal significance.

RULES GOING INTO EFFECT MAY 27, 1998

COMMERCE DEPARTMENT

National Oceanic and Atmospheric Administration

Fishery conservation and management:

West Coast States and Western Pacific fisheries—

Western Pacific crustacean; published 4-27-98

HEALTH AND HUMAN SERVICES DEPARTMENT

Food and Drug Administration

Color additives:

D&C Violet No. 2; published 4-23-98

GRAS or prior-sanctioned ingredients:

Sheanut oil; published 5-27-98

OFFICE OF MANAGEMENT AND BUDGET

Management and Budget Office

Freedom of Information Act; implementation; published 4-27-98

TRANSPORTATION DEPARTMENT

Marine equipment on board vessels in National Defense Reserve Fleet; transfer to U.S.-flag merchant ships operators and shipyards; CFR part removed; published 5-27-98

TRANSPORTATION DEPARTMENT

Federal Aviation Administration

Airworthiness directives:

Boeing; published 5-12-98

COMMENTS DUE NEXT WEEK

AGRICULTURE DEPARTMENT

Agricultural Marketing Service

Nectarines and peaches grown in California; comments due by 6-1-98; published 4-1-98

Onions grown in—

Idaho and Oregon; comments due by 6-1-98; published 5-15-98

AGRICULTURE DEPARTMENT

Animal and Plant Health Inspection Service

Livestock and poultry disease control:

Brucellosis; increased indemnity for cattle and bison; comments due by 6-1-98; published 3-31-98

Plant-related quarantine, foreign:

Rhododendron established in growing media; importation; comments due by 6-1-98; published 4-30-98

AGRICULTURE DEPARTMENT

Commodity Credit Corporation

Loan and purchase programs:

Conservation farm option program; comments due by 6-1-98; published 4-2-98

AGRICULTURE DEPARTMENT

Food Safety and Inspection Service

Meat and poultry inspection:

Pathogen reduction; hazard analysis and critical control point (HACCP) systems—

Product processing categories; policy clarification; comments due by 6-1-98; published 4-1-98

AGRICULTURE DEPARTMENT

Freedom of Information Act; implementation; comments due by 6-3-98; published 5-4-98

COMMERCE DEPARTMENT

National Oceanic and Atmospheric Administration

Endangered and threatened species:

Johnson's seagrass; comments due by 6-4-98; published 4-20-98

Fishery conservation and management:

Alaska; fisheries of Exclusive Economic Zone—

Scallop; comments due by 6-1-98; published 3-31-98

Scallop; comments due by 6-1-98; published 4-16-98

Shortraker/rougheye rockfish; comments due by 6-1-98; published 4-2-98

Highly migratory species fisheries—

Vessel monitoring systems requirements; implementation options; comments due by 6-1-98; published 4-17-98

West Coast States and Western Pacific fisheries—

Pacific Coast groundfish; comments due by 6-5-98; published 5-15-98

COMMODITY FUTURES TRADING COMMISSION

Practice and procedure:

Miscellaneous amendments; comments due by 6-2-98; published 4-3-98

CONSUMER PRODUCT SAFETY COMMISSION

Poison prevention packaging:

Child-resistant packaging requirements—

Minoxidil preparations with more than 14 mg of minoxidil per package; comments due by 6-1-98; published 3-17-98

DEFENSE DEPARTMENT

Vocational rehabilitation and education:

Reservists education—

Monthly verification of enrollment and other reports; comments due by 6-1-98; published 3-31-98

DEFENSE DEPARTMENT

Navy Department

Acquisition regulations:

Shipbuilding contracts; price adjustments; comments due by 6-1-98; published 5-1-98

EDUCATION DEPARTMENT

Elementary and secondary education:

Elementary and Secondary Education Act; implementation—

Helping disadvanaged children meet high standards; comments due by 6-1-98; published 3-31-98

ENVIRONMENTAL PROTECTION AGENCY

Air pollutants, hazardous; national emission standards:

Halogenated solvent cleaning; temporary stay extension; comments due by 6-4-98; published 5-5-98

Air pollution; standards of performance for new stationary sources:

Dupont test program for hydrogen-fueled flares; comments due by 6-3-98; published 5-4-98

Air programs:

Accidental release prevention—

Risk management programs; comments due by 6-1-98; published 4-17-98

Air quality implementation plans; approval and promulgation; various States:

California; comments due by 6-1-98; published 4-30-98

Connecticut et al.; comments due by 6-1-98; published 4-30-98

New York; comments due by 6-1-98; published 4-30-98

Hazardous waste program authorization:

Oklahoma; comments due by 6-1-98; published 4-30-98

Hazardous waste program authorizations:

Oklahoma; comments due by 6-1-98; published 4-30-98

Hazardous waste:

Identification and listing—

Exclusions; comments due by 6-1-98; published 4-15-98

Recycled used oil management standards; comments due by 6-5-98; published 5-6-98

Recycled used oil management standards; comments due by 6-5-98; published 5-6-98

Pesticides; tolerances in food, animal feeds, and raw agricultural commodities:

Propiconazole; comments due by 6-2-98; published 4-3-98

Practice and procedure:

Civil penalties administrative assessment, compliance or corrective action orders issuance, and permits revocation, termination, or suspension; comments due by 6-5-98; published 5-6-98

Water pollution control:

Water quality standards—

Alabama; comments due by 6-3-98; published 5-13-98

Polychlorinated biphenyls (PCBs); priority toxic pollutants numeric criteria; States' compliance; comments

due by 6-1-98; published 4-2-98

FEDERAL COMMUNICATIONS COMMISSION

Common carrier services:

Operations support systems, interconnection, and operator services and directory assistance; performance measurements and reporting requirements; comments due by 6-1-98; published 5-15-98

Radio stations; table of assignments:

Idaho; comments due by 6-1-98; published 4-21-98

New Mexico; comments due by 6-1-98; published 4-21-98

New York; comments due by 6-1-98; published 4-21-98

Oklahoma et al.; comments due by 6-1-98; published 4-21-98

HEALTH AND HUMAN SERVICES DEPARTMENT

Children and Families Administration

Child support enforcement program:

Grants to states for access and visitation programs; monitoring, evaluation, and reporting; comments due by 6-1-98; published 3-31-98

HEALTH AND HUMAN SERVICES DEPARTMENT

Food and Drug Administration

Human drugs:

New drug applicants; patent holder notification requirements; clarification; comments due by 6-4-98; published 3-6-98

HEALTH AND HUMAN SERVICES DEPARTMENT

Health Care Financing Administration

Medicare:

End-stage renal disease—

Home health agency costs for cost reporting periods beginning on or after October 1, 1997; schedule of per-beneficiary limitations; comments due by 6-1-98; published 3-31-98

HEALTH AND HUMAN SERVICES DEPARTMENT

Health resources development:

Organ procurement and transplantation network; operation and performance goals; comments due by 6-1-98; published 4-2-98

INTERIOR DEPARTMENT

Fish and Wildlife Service

Endangered and threatened species:

Flatwoods salamander; comments due by 6-1-98; published 3-25-98

Pecos or puzzle sunflower; comments due by 6-1-98; published 4-1-98

Yreka phlox from Northern California; comments due by 6-1-98; published 4-1-98

Migratory bird hunting:

Annual hunting regulations and Indian tribal seasons requests; comments due by 6-2-98; published 3-20-98

Canada goose; special permit; comments due by 6-1-98; published 3-31-98

INTERIOR DEPARTMENT

National Park Service

National Park System:

Glacier Bay National Park, AK; commercial fishing activities; comments due by 6-1-98; published 4-30-98

INTERIOR DEPARTMENT

Surface Mining Reclamation and Enforcement Office

Permanent program and abandoned mine land reclamation plan submissions:

Kentucky; comments due by 6-2-98; published 5-18-98

LABOR DEPARTMENT

Employment and Training Administration

Indian and Native American welfare-to-work grants program; governing provisions; comments due by 6-1-98; published 4-1-98

LABOR DEPARTMENT

Occupational Safety and Health Administration

Safety and health standards:

Methylene chloride; occupational exposure; comments due by 6-3-98; published 5-4-98

PENSION BENEFIT GUARANTY CORPORATION

Multiemployer and single-employer plans:

Valuation and payment of lump sum benefits; comments due by 6-1-98; published 4-30-98

PERSONNEL MANAGEMENT OFFICE

Employment:

Personnel records and training; comments due by 6-1-98; published 4-1-98

TRANSPORTATION DEPARTMENT

Coast Guard

Ports and waterways safety:

Copper Canyon, Lake Havasu, Colorado River; regulated navigation area; comments due by 6-1-98; published 4-2-98

Savannah River, GA; safety zone; comments due by 6-1-98; published 4-30-98

Vocational rehabilitation and education:

Reservists education—

Monthly verification of enrollment and other reports; comments due by 6-1-98; published 3-31-98

TRANSPORTATION DEPARTMENT

Federal Aviation Administration

Airworthiness directives:

Agusta S.p.A.; comments due by 6-1-98; published 4-1-98

Airbus; comments due by 6-1-98; published 4-30-98

Bell; comments due by 6-1-98; published 4-1-98

Boeing; comments due by 6-1-98; published 4-15-98

British Aerospace; comments due by 6-1-98; published 4-1-98

Class E airspace; comments due by 6-5-98; published 5-6-98

Dassault; comments due by 6-1-98; published 4-30-98

Dornier; comments due by 6-4-98; published 5-5-98

Eurocopter France; comments due by 6-1-98; published 4-2-98

GKN Westland Helicopters Ltd.; comments due by 6-1-98; published 4-1-98

Glaser-Dirks Flugzeugbau GmbH; comments due by 6-1-98; published 4-27-98

McDonnell Douglas; comments due by 6-4-98; published 4-20-98

Raytheon; comments due by 6-4-98; published 4-27-98

Rolls-Royce, plc; comments due by 6-1-98; published 4-30-98

Class E airspace; comments due by 6-1-98; published 3-25-98

VOR Federal airways; comments due by 6-4-98; published 5-5-98

TRANSPORTATION DEPARTMENT

Federal Transit Administration

Prohibited drug use and alcohol misuse prevention in transit operations:

Safety-sensitive functions in drug and alcohol rules; ≥maintenance≥ definition; comments due by 6-1-98; published 3-2-98

TREASURY DEPARTMENT

Comptroller of the Currency

International banking activities:

International loans; accounting fee treatment; comments due by 6-5-98; published 4-6-98

TREASURY DEPARTMENT

Fiscal Service

Bonds and notes, U.S. Treasury:

U.S. savings bonds; creation of new categories of issuing agents and expansion of means of sales, including electronic sales; comments due by 6-1-98; published 4-30-98

TREASURY DEPARTMENT

Internal Revenue Service

Income taxes:

Allocation and sourcing of income and deductions among taxpapers engaged in global dealing operation; comments due by 6-4-98; published 3-6-98

Foreign sales corporation transfer pricing; source and grouping rules; comments due by 6-1-98; published 3-3-98

VETERANS AFFAIRS DEPARTMENT

Vocational rehabilitation and education:

Reservists education—

Monthly verification of enrollment and other reports; comments due by 6-1-98; published 3-31-98