6–29–98
Vol. 63 No. 124
Pages 35117–35498

federal register

Monday
June 29, 1998

Briefings on how to use the Federal Register
For information on briefing in Washington, DC, see announcement on the inside cover of this issue.

Now Available Online via
GPO Access

Free online access to the official editions of the *Federal Register, the Code of Federal Regulations* and other Federal Register publications is available on *GPO Access*, a service of the U.S. Government Printing Office at:

http://www.access.gpo.gov/nara/index.html

For additional information on ***GPO Access*** products, services and access methods, see page II or contact the *GPO Access* User Support Team via:

★ Phone: toll-free: 1-888-293-6498

★ Email: gpoaccess@gpo.gov

The **FEDERAL REGISTER** is published daily, Monday through Friday, except official holidays, by the Office of the Federal Register, National Archives and Records Administration, Washington, DC 20408, under the Federal Register Act (44 U.S.C. Ch. 15) and the regulations of the Administrative Committee of the Federal Register (1 CFR Ch. I). The Superintendent of Documents, U.S. Government Printing Office, Washington, DC 20402 is the exclusive distributor of the official edition.

The **Federal Register** provides a uniform system for making available to the public regulations and legal notices issued by Federal agencies. These include Presidential proclamations and Executive Orders, Federal agency documents having general applicability and legal effect, documents required to be published by act of Congress, and other Federal agency documents of public interest.

Documents are on file for public inspection in the Office of the Federal Register the day before they are published, unless the issuing agency requests earlier filing. For a list of documents currently on file for public inspection, see http://www.nara.gov/fedreg.

The seal of the National Archives and Records Administration authenticates the Federal Register as the official serial publication established under the Federal Register Act. Under 44 U.S.C. 1507, the contents of the **Federal Register** shall be judicially noticed.

The **Federal Register** is published in paper and on 24x microfiche. It is also available online at no charge as one of the databases on GPO Access, a service of the U.S. Government Printing Office.

The online edition of the **Federal Register** is issued under the authority of the Administrative Committee of the Federal Register as the official legal equivalent of the paper and microfiche editions (44 U.S.C. 4101 and 1 CFR 5.10). It is updated by 6 a.m. each day the **Federal Register** is published and it includes both text and graphics from Volume 59, Number 1 (January 2, 1994) forward.

GPO Access users can choose to retrieve online **Federal Register** documents as TEXT (ASCII text, graphics omitted), PDF (Adobe Portable Document Format, including full text and all graphics), or SUMMARY (abbreviated text) files. Users should carefully check retrieved material to ensure that documents were properly downloaded.

On the World Wide Web, connect to the **Federal Register** at http://www.access.gpo.gov/nara. Those without World Wide Web access can also connect with a local WAIS client, by Telnet to swais.access.gpo.gov, or by dialing (202) 512-1661 with a computer and modem. When using Telnet or modem, type swais, then log in as guest with no password.

For more information about GPO Access, contact the GPO Access User Support Team by E-mail at gpoaccess@gpo.gov; by fax at (202) 512–1262; or call (202) 512–1530 or 1–888–293–6498 (toll free) between 7 a.m. and 5 p.m. Eastern time, Monday–Friday, except Federal holidays.

The annual subscription price for the **Federal Register** paper edition is $555, or $607 for a combined **Federal Register,** Federal Register Index and List of CFR Sections Affected (LSA) subscription; the microfiche edition of the **Federal Register** including the Federal Register Index and LSA is $220. Six month subscriptions are available for one-half the annual rate. The charge for individual copies in paper form is $8.00 for each issue, or $8.00 for each group of pages as actually bound; or $1.50 for each issue in microfiche form. All prices include regular domestic postage and handling. International customers please add 25% for foreign handling. Remit check or money order, made payable to the Superintendent of Documents, or charge to your GPO Deposit Account, VISA, MasterCard or Discover. Mail to: New Orders, Superintendent of Documents, P.O. Box 371954, Pittsburgh, PA 15250–7954.

There are no restrictions on the republication of material appearing in the **Federal Register.**

How To Cite This Publication: Use the volume number and the page number. Example: 63 FR 12345.

SUBSCRIPTIONS AND COPIES

PUBLIC	
Subscriptions:	
Paper or fiche	**202–512–1800**
Assistance with public subscriptions	**512–1806**
General online information	**202–512–1530; 1–888–293–6498**
Single copies/back copies:	
Paper or fiche	**512–1800**
Assistance with public single copies	**512–1803**
FEDERAL AGENCIES	
Subscriptions:	
Paper or fiche	**523–5243**
Assistance with Federal agency subscriptions	**523–5243**

FEDERAL REGISTER WORKSHOP

THE FEDERAL REGISTER: WHAT IT IS AND HOW TO USE IT

FOR: Any person who uses the Federal Register and Code of Federal Regulations.

WHO: Sponsored by the Office of the Federal Register.

WHAT: Free public briefings (approximately 3 hours) to present:

1. The regulatory process, with a focus on the Federal Register system and the public's role in the development regulations.
2. The relationship between the Federal Register and Code of Federal Regulations.
3. The important elements of typical Federal Register documents.
4. An introduction to the finding aids of the FR/CFR system.

WHY: To provide the public with access to information necessary to research Federal agency regulations which directly affect them. There will be no discussion of specific agency regulations.

WASHINGTON, DC

WHEN: July 14, 1998 at 9:00 am

WHERE: Office of the Federal Register
Conference Room
800 North Capitol Street, NW.
Washington, DC
(3 blocks north of Union Station Metro)

RESERVATIONS: 202–523–4538

Printed on recycled paper containing 100% post consumer waste

Contents

Federal Register

Vol. 63, No. 124

Monday, June 29, 1998

Agency for International Development
NOTICES
Meetings:
Malaria Vaccine Development Program Federal Advisory Committee, 35279

Agricultural Marketing Service
PROPOSED RULES
Papayas grown in—
Hawaii, 35164–35166

Agriculture Department
See Agricultural Marketing Service
See Farm Service Agency
See Forest Service
See Grain Inspection, Packers and Stockyards Administration
See Rural Utilities Service

Assassination Records Review Board
NOTICES
Meetings; Sunshine Act, 35188

Centers for Disease Control and Prevention
NOTICES
Grants and cooperative agreements; availability, etc.:
Diabetes control within managed-care settings; translational research centers, 35231–35237
Meetings:
National Center for Infectious Diseases, 35237–35238

Children and Families Administration
See Refugee Resettlement Office

Civil Rights Commission
NOTICES
Meetings; State advisory committees:
Maryland, 35188

Coast Guard
RULES
Great Lakes pilotage regulations:
Reorganization, 35138–35140

Commerce Department
See International Trade Administration
See National Oceanic and Atmospheric Administration

Comptroller of the Currency
RULES
Municipal securities dealers; reporting and recordkeeping requirements
Correction, 35309

Defense Department
NOTICES
Agency information collection activities:
Submission for OMB review; comment request, 35201–35202
Meetings:
Science Board task forces, 35202–35203

Education Department
NOTICES
Agency information collection activities:
Proposed collection; comment request, 35203–35204
Grants and cooperative agreements; availability, etc.:
National Institute on Disability and Rehabilitation Research—
Rehabilitation research and training centers, 35476–35498
Meetings:
Postsecondary Education Improvement Fund National Board; correction, 35204

Energy Department
See Federal Energy Regulatory Commission

Environmental Protection Agency
RULES
Air quality implementation plans; approval and promulgation; various States:
Indiana, 35141–35145
Pennsylvania, 35145–35147
Hazardous waste:
Identification and listing—
Organobromine production wastes, 35147–35150
Toxic substances:
Polychlorinated Biphenyls (PCBs)—
Disposal, 35384–35474
PROPOSED RULES
Air quality implementation plans; approval and promulgation; various States:
Indiana, 35167
Pennsylvania, 35167–35168
NOTICES
Meetings:
Gulf of Mexico Program Citizens Advisory Committee, 35212
Gulf of Mexico Program Management Committee, 35212
Project XL (excellence and leadership) innovative technologies projects:
Lucent Technologies, Inc.; umbrella final project agreement and related documents, 35212–35213

Farm Service Agency
NOTICES
Warehouse Act fees:
Cotton, etc., 35186–35187

Federal Aviation Administration
RULES
Airworthiness directives:
Eurocopter France, 35128–35129
Class E airspace; correction, 35129–35130, 35309
PROPOSED RULES
Class E airspace, 35166–35167
NOTICES
Meetings:
Aviation Rulemaking Advisory Committee, 35306–35307

Federal Bureau of Investigation
NOTICES
Meetings:
DNA Advisory Board, 35280–35281

Federal Communications Commission
RULES
Common carrier services:
Telephone number portability—
Long-term number portability cost distribution, 35150–35161
PROPOSED RULES
Common carrier services:
Advanced telecommunications technology, regulations regarding experiments; comment request, 35168–35170
NOTICES
Radio services, special:
Phase II 220 MHz service licenses auction; minimum opening bids and other procedural issues, 35213–35224

Federal Emergency Management Agency
NOTICES
Agency information collection activities:
Proposed collection; comment request, 35224–35225
Disaster and emergency areas:
American Samoa, 35225
Florida, 35225
Kansas, 35225–35226
New York, 35226
North Dakota, 35226
Northern Mariana Islands, 35226–35227
Pennsylvania, 35227
South Dakota, 35227–35228
Tennessee, 35228

Federal Energy Regulatory Commission
NOTICES
Agency information collection activities:
Proposed collection; comment request, 35204–35205
Environmental statements; availability, etc.:
International Paper Co. et al., 35208
Wisconsin River Power Co. et al., 35208–35209
Environmental statements; notice of intent:
Etowah LNG Co., L.L.C., 35209–35211
Hydroelectric applications, 35211
Meetings; Sunshine Act, 35211
Refund reports:
Algonquin Gas Transmission Co., 35211
Iroquois Gas Transmission System, L.P., 35212
Applications, hearings, determinations, etc.:
Denver, CO, 35205–35206
Gulf States Transmission Corp., 35206
Koch Gateway Pipeline Co., 35206
National Fuel Gas Supply Corp., 35206–35207
NorAm Gas Transmission Co., 35207
Williston Basin Interstate Pipeline Co., 35207
Wilson, Charles B., Jr., Inc., et al., 35208

Federal Housing Finance Board
RULES
Federal home loan bank system:
Membership and advances eligibility, 35117–35128

Federal Maritime Commission
NOTICES
Freight forwarder licenses:
Wilson, Damon Lavelle, et al., 35228
Investigations, hearings, petitions, etc.:
Kin Bridge Express, Inc., et al., 35228–35229

Federal Reserve System
NOTICES
Banks and bank holding companies:
Formations, acquisitions, and mergers—, 35229–35231
Correction, 35231

Federal Trade Commission
RULES
Conflict of interests, 35130

Fish and Wildlife Service
RULES
Alaska National Interest Lands Conservation Act; Title VIII Implementation (subsistence priority):
Fish and wildlife; subsistence taking, 35332–35381
PROPOSED RULES
Endangered and threatened species:
Northern goshawk, 35183–35184
NOTICES
Endangered and threatened species:
Recovery plans—
Mobile River Basin aquatic ecosystem; 15 freshwater species, 35277–35278

Food and Drug Administration
RULES
Clinical investigators financial disclosure
Correction, 35134
Food additives:
Adjuvants, production aids, and sanitizers—
1,6-hexanediamine, N,N'-bis(2,2,6,6-tetramethyl-4-piperidinyl)-, polymers wit h morpholine-2,4,6-trichloro-1,3,5-triazine reaction products, 35134–35135
NOTICES
Meetings:
Antiviral Drugs Advisory Committee, 35238
Biological Response Modifiers Advisory Committee, 35238

Forest Service
RULES
Alaska National Interest Lands Conservation Act; Title VIII implementation (subsistence priority):
Fish and wildlife; subsistence taking, 35332–35381
NOTICES
Meetings:
Olympic Provincial Interagency Executive Committee Advisory Committee, 35187

Grain Inspection, Packers and Stockyards Administration
NOTICES
Central filing systems; State certifications:
Oklahoma, 35187–35188

Health and Human Services Department
See Centers for Disease Control and Prevention
See Food and Drug Administration
See Health Care Financing Administration
See Health Resources and Services Administration
See National Institutes of Health
See Refugee Resettlement Office

Health Care Financing Administration
NOTICES
Agency information collection activities:
Submission for OMB review; comment request, 35239

Health Resources and Services Administration
NOTICES
Veterans Health Care Act of 1992:
Rebate option, 35239–35242

Housing and Urban Development Department
RULES
Disaster recovery initiative; use of grant funds; clarification, 35135–35137
NOTICES
Agency information collection activities:
Proposed collection; comment request, 35250–35276
Reporting and recordkeeping requirements, 35277

Immigration and Naturalization Service
RULES
Immigration:
Nicaraguan and Cuban nationals; status adjustment
Correction, 35309

Interior Department
See Fish and Wildlife Service
See Land Management Bureau
See National Park Service

International Development Cooperation Agency
See Agency for International Development
See Overseas Private Investment Corporation

International Trade Administration
NOTICES
Antidumping:
Welded carbon steel pipe and tube from—
Turkey, 35190–35200
Antidumping and countervailing duties:
Administrative review requests, 35188–35190

Justice Department
See Federal Bureau of Investigation
See Immigration and Naturalization Service
RULES
Executive Office for Immigration Review:
Aliens who are nationals of Guatemala, El Salvador, and former Soviet bloc countries; deportation suspension and removal cancellation; motion to open
Correction, 35117
NOTICES
Pollution control; consent judgments:
Keystone Sanitation Co., Inc., et al., 35280

Labor Department
See Occupational Safety and Health Administration
See Pension and Welfare Benefits Administration

Land Management Bureau
NOTICES
Minerals management:
Conveyance of federally owned mineral interests—
Arizona, 35278
Realty actions; sales, leases, etc.:
Nevada, 35278

National Archives and Records Administration
NOTICES
Agency information collection activities:
Submission for OMB review; comment request, 35291–35292
Meetings:
NARA space planning initiative; objectives and planning process, 35292

National Credit Union Administration
NOTICES
Meetings; Sunshine Act, 35292

National Highway Traffic Safety Administration
PROPOSED RULES
Motor vehicle safety standards:
Occupant crash protection—
Hybrid III test dummy; 6-year old child dummy design and performance specifications, 35170–35182

National Institutes of Health
NOTICES
Committees; establishment, renewal, termination, etc.:
Genetic Testing Advisory Committee, 35242
Meetings:
National Cancer Institute, 35242–35244
National Eye Institute, 35244
National Institute of Arthritis and Musculoskeletal and Skin Diseases, 35244
National Institute of General Medical Sciences, 35244–35245
Scientific Review Center Advisory Committee, 35245

National Oceanic and Atmospheric Administration
RULES
Fishery conservation and management:
Atlantic bluefin tuna, 35161–35162
West Coast States and Western Pacific fisheries—
Western Pacific bottomfish, 35162–35163
PROPOSED RULES
Fishery conservation and management:
West Coast States and Western Pacific fisheries—
Precious corals, 35184–35185
NOTICES
Coastal zone management programs and estaurine sanctuaries:
Padilla Bay National Estaurine Research Reserve, WA; boundary expansion, 35200–35201

National Park Service
NOTICES
National Register of Historic Places:
Pending nominations, 35278–35279

Nuclear Regulatory Commission
NOTICES
Environmental statements; availability, etc.:
Commonwealth Edison Co., 35294–35295
Maine Yankee Atomic Power Co., 35295–35296
Gaseous diffusion plants; ''backfitting'' requirements; staff implementation criteria; availability and inquiry, 35296
Meetings:
Reactor Safeguards Advisory Committee, 35296–35297
Applications, hearings, determinations, etc.:
Duke Energy Corp., 35293–35294

Occupational Safety and Health Administration
RULES
Shipyard employment safety and health standards and construction safety and health standards:
Asbestos; occupational exposure, 35137–35138

Overseas Private Investment Corporation
NOTICES
Agency information collection activities:
Submission for OMB review; comment request, 35279–35280

Pension and Welfare Benefits Administration
NOTICES
Employee benefit plans; prohibited transaction exemption:
Van Ness Plastic Molding Co., Inc., et al., 35281–35291

Postal Rate Commission
RULES
Practice and procedure:
Domestic mail classification schedule—
Barcoded small parcel experiment, 35140–35141
NOTICES
Visits to facilities, 35297

Public Health Service
See Centers for Disease Control and Prevention
See Food and Drug Administration
See Health Resources and Services Administration
See National Institutes of Health

Railroad Retirement Board
NOTICES
Agency information collection activities:
Submission for OMB review; comment request, 35297–35298

Refugee Resettlement Office
NOTICES
Grants and cooperative agreements; availability, etc.:
Refugee resettlement program—
Social services fund; State allocation, 35245–35250

Rural Utilities Service
RULES
Electric loans:
Electric engineering, architectural services, and design policies and procedures, 35312–35330

Securities and Exchange Commission
NOTICES
Agency information collection activities:
Proposed collection; comment request, 35298
Self-regulatory organizations; proposed rule changes:
Chicago Board Options Exchange, Inc., correction, 35309
Delta Clearing Corp., 35298–35299
National Association of Securities Dealers, Inc., 35299–35303
Pacific Exchange, Inc., 35303–35304

Social Security Administration
RULES
Freedom of Information Act; implementation, 35130–35134

State Department
NOTICES
Privacy Act:
Systems of records, 35305–35306

Surface Transportation Board
NOTICES
Railroad services abandonment:
Knox & Kane Railroad Co., 35307–35308

Transportation Department
See Coast Guard
See Federal Aviation Administration
See National Highway Traffic Safety Administration
See Surface Transportation Board
NOTICES
Aviation proceedings:
Certificates of public convenience and necessity and foreign air carrier permits; weekly applications, 35306
Aviation proceedings:
Agreements filed; weekly receipts, 35306

Treasury Department
See Comptroller of the Currency
NOTICES
Boycotts, international:
Countries requiring cooperation; list, 35308

Separate Parts In This Issue

Part II
Department of Agriculture, Rural Utilities Service, 35312–35330

Part III
Department of Agriculture, Forest Service, 35309–35381

Part IV
Environmental Protection Agency, 35384–35474

Part V
Department of Education, 35476–35498

Reader Aids
Consult the Reader Aids section at the end of this issue for phone numbers, online resources, finding aids, reminders, and notice of recently enacted public laws.

CFR PARTS AFFECTED IN THIS ISSUE

A cumulative list of the parts affected this month can be found in the Reader Aids section at the end of this issue.

7 CFR
1724 35312
Proposed Rules:
928 35164
8 CFR
3 (2 documents) 35117, 35309
240 35309
245 35309
274a 35309
299 35309
12 CFR
10 35309
933 35117
935 35117
14 CFR
39 35128
71 (2 documents) 35129, 35309
Proposed Rules:
71 35166
16 CFR
5 35130
20 CFR
402 35130
21 CFR
54 35134
178 35134
24 CFR
Ch. V 35135
29 CFR
1915 35137
1926 35137
33 CFR
404 35138
405 35138
406 35138
407 35138
36 CFR
242 35322
39 CFR
3001 35140
40 CFR
52 (2 documents) 35141, 35145
148 35147
268 35147
271 35147
750 35381
761 35381
Proposed Rules:
52 (2 documents) 35167
46 CFR
401 35138
402 35138
403 35138
404 35138
47 CFR
52 35150
Proposed Rules:
Ch. I 35168
49 CFR
Proposed Rules:
572 35170
50 CFR
100 35332
285 35161
660 35162
Proposed Rules:
17 35183
660 35184

Rules and Regulations

Federal Register
Vol. 63, No. 124
Monday, June 29, 1998

This section of the FEDERAL REGISTER contains regulatory documents having general applicability and legal effect, most of which are keyed to and codified in the Code of Federal Regulations, which is published under 50 titles pursuant to 44 U.S.C. 1510.

The Code of Federal Regulations is sold by the Superintendent of Documents. Prices of new books are listed in the first FEDERAL REGISTER issue of each week.

DEPARTMENT OF JUSTICE

8 CFR Part 3

[EOIR No. 121P; AG Order No. 2162–98]

RIN 1125–AA23

Executive Office for Immigration Review; Motion To Reopen: Suspension of Deportation and Cancellation of Removal; Corrections

AGENCY: Executive Office for Immigration Review, Justice.

ACTION: Interim rule; Corrections.

SUMMARY: The Department of Justice published in the **Federal Register** of June 11, 1998 (63 FR 31890) a document which amended the regulations of the Executive Office for Immigration Review by establishing a new procedure for the filing and adjudication of motions to reopen to apply for suspension of deportation and cancellation of removal pursuant to the Nicaraguan Adjustment and Central American Relief Act. That document, which is an interim rule, contains technical errors that are corrected in this document.

EFFECTIVE DATES: June 29, 1998.

FOR FURTHER INFORMATION CONTACT: Rosemary Hart, Senior Counsel, Office of Legal Counsel, U.S. Department of Justice, 950 Pennsylvania Avenue, NW., Washington, DC 20530, (202) 514–2027 (not a toll-free call).

SUPPLEMENTARY INFORMATION:

Need for Correction

As published in the **Federal Register** on June 11, 1998 (63 FR 31890), the interim rule amending part 3 of title 8, Code of Federal Regulation contains technical errors that are in need of correction.

Correction of Publication

Accordingly, the publication on June 11, 1998 (63 FR 31890) of the interim rule that was the subject of FR Doc. 98–15588 is corrected as follows:

PART 3—EXECUTIVE OFFICE FOR IMMIGRATION REVIEW

§ 3.43 [Corrected]

1. On page 31894, in the third column, in § 3.43(b), the paragraph designated as (b)(4)(iv)(c) is correctly redesignated as paragraph (b)(4)(iv)(C).

2. On page 31895, in the first column, in § 3.43, the paragraphs designated as (c) and (d) are correctly redesignated as paragraphs (d) and (e), respectively.

Rosemary Hart,

Federal Register Liaison Officer.

[FR Doc. 98–17108 Filed 6–26–98; 8:45 am]

BILLING CODE 4410–30–M

FEDERAL HOUSING FINANCE BOARD

12 CFR Parts 933 and 935

[No. 98–15]

[RIN 3069–AA69]

Eligibility for Membership and Advances

AGENCY: Federal Housing Finance Board.

ACTION: Final rule.

SUMMARY: The Federal Housing Finance Board (Finance Board) is amending the definitions in its membership and advances regulations relating to combination business or farm properties on which a residence is located. For institutions with total assets of $500,000,000 or less, the amendments eliminate the requirement that at least 50 percent of the value of such properties be attributable to the residential portion of the property, and require instead that the residence constitute an integral part of the property. The amendments are intended to assist smaller depository institutions, particularly those located in rural areas, that have combination farm or business property loans in their portfolios, to qualify for Federal Home Loan Bank (FHLBank) membership and, once admitted, to provide the collateral necessary to obtain FHLBank advances. For those institutions with assets in excess of $500,000,000, the amendments retain the existing 50 percent of value requirement. The amendments also allow loans that would satisfy the statutory and regulatory requirements under the Community Investment Program, or under the community investment cash advance provisions, of the Federal Home Loan Bank Act (Bank Act), to qualify for membership eligibility purposes.

DATES: Effective July 29, 1998.

FOR FURTHER INFORMATION CONTACT: Julie Paller, Senior Financial Analyst, Office of Policy, (202) 408–2842; Neil R. Crowley, Associate General Counsel, (202) 408–2990, Sharon B. Like, Senior Attorney-Adviser, (202) 408–2930, Office of General Counsel; Federal Housing Finance Board, 1777 F Street, N.W., Washington D.C. 20006.

SUPPLEMENTARY INFORMATION:

I. FHLBank System and Finance Board Roles and Responsibilities

Under the Bank Act, the Finance Board is responsible for the supervision and regulation of the 12 FHLBanks. *See* 12 U.S.C. 1422a(a), 1422b(a)(1). Specifically, the Finance Board is responsible for ensuring that the FHLBanks operate in a financially safe and sound manner and carry out their housing finance and community investment mission, and that they remain adequately capitalized and able to raise funds in the capital markets. *See id.* section 1422a(a)(3). The Bank Act also empowers the Finance Board to promulgate and enforce such regulations and orders as are necessary from time to time to carry out the provisions of the Bank Act, including regulations on FHLBank membership eligibility and advances collateral requirements. *See id.* section 1422b(a)(1).

II. Current 50 Percent Test For Loans Secured By Combination Property Under the Membership and Advances Regulations

The regulations of the Finance Board allow certain types of mortgage loans to be used in determining an institution's eligibility to become a FHLBank member and its ability to borrow from the FHLBank, after becoming a member. As described below, loans secured by combination properties can be used for these purposes only if at least 50 percent of the total appraised value of the combined property is attributable to the residential portion of the property (50 percent test). *See* 12 CFR

933.1(n)(1)(iii), 935.1. For both purposes, that test is the same.

A. Membership Eligibility

Section 4(a) of the Bank Act establishes the eligibility criteria for institutions to become members of the FHLBank System. *See* 12 U.S.C. 1424(a). Section 4(a)(2)(A) of the Bank Act requires, in part, that an insured depository institution have ''at least 10 percent of its total assets in *residential mortgage loans*'' in order to be eligible for FHLBank membership (10 percent requirement). *See id.* section 1424(a)(2)(A) (emphasis added). The Bank Act does not define the term ''residential mortgage loan.'' The Finance Board's current membership regulation defines ''residential mortgage loan'' to include, among other things, a ''home mortgage loan.'' *See* 12 CFR 933.1(bb)(1). The Bank Act defines a ''home mortgage loan'' as ''a loan made by a member or a nonmember borrower upon the security of a home mortgage.'' *See* 12 U.S.C. 1422(5). The Bank Act defines a ''home mortgage'' generally as a mortgage upon real estate ''upon which is located, or which comprises or includes, one or more homes or other dwelling units, all of which may be defined by the [Finance] Board.'' *See id.* section 1422(6). The membership regulation implements these statutory provisions by defining ''home mortgage loan'' to include, in part, a loan secured by a first lien on ''[c]ombination business or farm property where at least 50 percent of the total appraised value of the combined property is attributable to the residential portion of the property.'' *See* 12 CFR 933.1(n)(1)(iii). The term ''combination business or farm property'' means ''real property for which the total appraised value is attributable to residential, and business or farm uses.'' *Id.* § 933.1(i).

B. Eligible Collateral for Advances

Section 10(a) of the Bank Act authorizes a FHLBank to make secured advances to its members and specifies the types of collateral that a FHLBank may accept when originating or renewing an advance. *See* 12 U.S.C. 1430(a). Section 10(a)(1) of the Bank Act requires a FHLBank making or renewing an advance to its members to obtain and maintain a security interest in certain specified types of collateral, among which are ''[f]ully disbursed, whole first mortgages on *improved residential property* (not more than 90 days delinquent).'' *See id.* section 1430(a)(1) (emphasis added). The Bank Act does not define ''residential property'' or ''improved residential property.'' The Finance Board's current advances regulation defines ''improved residential real property'' to mean ''residential real property excluding real property to be improved, or in the process of being improved, by the construction of dwelling units.'' 12 CFR 935.1. The advances regulation defines ''residential real property'' to include, among other things, ''combination business or farm property, provided that at least 50 percent of the total appraised value of the combined property is attributable to the residential portion of the property.'' *See id.* The term ''combination business or farm property'' means ''real property for which the total appraised value is attributable to the combination of residential, and business or farm uses.'' *Id.*

Thus, in order for a combination farm or business loan to qualify as a ''residential mortgage loan'' for purposes of satisfying the 10 percent requirement under the current membership regulation, or to qualify for purposes of satisfying advance collateral requirements under the current advances regulation, the combination farm or business property securing the loan must meet the 50 percent test.

III. Proposed Rulemaking

A. Derivation and Description of Proposed Rule

In early 1997, the Finance Board was approached by representatives of community depository institutions, particularly those located in rural areas, who advised that they have a need for alternative funding sources to meet credit demands in their communities, which they believed the FHLBank System was well-suited to provide. As discussed in the preamble to the proposed rule, they indicated that community depository institutions, particularly those in rural areas, often are essential to the housing finance activities and the broader economic well being of the communities they serve. Such institutions have less demand for conventional single family and multifamily mortgage credit and their service areas often are characterized by low population density and a low level of economic activity. In such circumstances, those institutions have not been able to originate a substantial number of residential first mortgage loans. Moreover, many loans originated by rural banks are made on the security of family farms, which are in part residential but which often do not meet the 50 percent test. They stated that the 50 percent test thus hinders the ability of rural banks to become FHLBank System members or to take full advantage, as FHLBank members, of the opportunity to obtain advances and thereby serve the credit needs of their communities.

In response to these concerns, the Finance Board had reason to believe that the 50 percent test may operate to exclude some number of residential properties beyond what was intended when the Finance Board adopted the test. Accordingly, the Finance Board reviewed the relevant statutory and regulatory provisions governing membership eligibility and advances collateral and determined, as discussed in greater detail below, that the statute affords sufficient latitude to address the issues by making changes to the current regulations.

In order to confirm whether the concerns raised by the community institutions were well-founded, the Finance Board issued the proposed rule, which would have eliminated the 50 percent test in both the membership and advances regulations, and replaced it with a provision permitting a loan to be eligible if it is secured by ''combination business or farm property, on which is located a permanent structure actually used as a residence, other than for temporary or seasonal housing.'' *See* 62 FR 53251—53 (Oct. 14, 1997). The objective of the proposal was to ease the burdens of the 50 percent test, within the parameters of the statute. Doing so would allow more institutions with combination family farm/residential loans or combination family business/residential loans (such as loans secured by businesses where the family owns and lives in a residential unit above the store) to be eligible for FHLBank membership and borrowing from the FHLBanks. The requirement that any eligible combination property must have a permanent structure actually used as a residence was intended to ensure that the property retained the requisite residential character required by the statute, which was one reason why the Finance Board adopted the 50 percent test. The proposal was not intended to allow large agribusiness or other large commercial loans to be used for membership eligibility and advances collateral purposes.

In addition, the proposed rule defined ''residential mortgage loan,'' for membership eligibility purposes, to include ''[l]oans that finance properties or activities that, if made by a member, would satisfy the statutory requirements for the Community Investment Program [(CIP)] established under section 10(i) of the Bank Act, or the regulatory requirements established for any community investment cash advance program authorized by section 10(j)(10)

of the Bank Act.'' *See* 62 FR 53251—53; 12 U.S.C. 1430(i), (j)(10). The intent of this proposed amendment was to allow such community investment loans to be considered for purposes of eligibility for membership, and to conform the membership regulation more closely to the advances regulation, which already includes loans financed by section 10(i) or section 10(j)(10) advances within the definition of ''residential housing finance assets.'' *See* 12 CFR 935.1.

B. General Discussion of Comments on Proposed Rule

The Finance Board received over 290 comment letters on the proposed rule, which were split relatively evenly between those supporting and those opposing the proposal. The commenters supporting the proposal included five FHLBanks, FHLBank members, prospective members, banking trade associations, and state finance departments. The overwhelming majority of the letters supporting the proposal came from small community banks and thrifts, predominantly in rural areas. The remaining letters supporting the proposal followed closely a comment letter submitted by a banking trade association.

All but one of the comment letters opposing the proposal were from persons or entities associated with the Farm Credit System, a nationwide network of federally chartered, borrower-owned cooperative financial institutions and related service organizations specializing in agricultural loans. The Farm Credit System institutions are major competitors of commercial banks and other farm and rural housing lenders within agricultural credit markets. *See* USDA Economic Research Service Agricultural Economic Report Number 749, ''Credit in Rural America'' (April 1997) at 42–43 (USDA Report). The trade association for the Farm Credit System submitted a detailed comment letter opposing the proposed rule. Nearly all of the remaining comment letters opposing the proposed rule raised substantially the same issues, and many of them were identical.

Commenters supporting the proposal confirmed the views expressed in the proposed rule that there is a need for additional funding sources in rural markets and that the proposal would further the FHLBank System's housing finance mission by making available such funding for combination farm/residential loans, which are important to rural communities. Commenters confirmed that the 50 percent test is under-inclusive, allowing only those combination loans secured by very small farms to be used for membership eligibility and advances collateral purposes. No commenter contended that the 50 percent test adequately captures all of the family farms or businesses that make up combination properties.

Commenters also stated that the 50 percent test may discriminate against lower income individuals, who can afford only a modest residence on their farm, in favor of more affluent persons, who can place a more expensive residence on the same acreage. They contended that the rule has the effect, in practice, of encouraging the FHLBanks and their members to ignore the housing finance needs of the lower income segments of their communities in favor of more wealthy individuals, which is inconsistent with the FHLBanks' housing finance mission. A banking trade association also emphasized that the 50 percent test may be unworkable in practice because even family farms often are appraised based on their ability to generate income, using the ''capitalization approach.'' Under that approach, the residential portion rarely would be valued at a level approaching the 50 percent test, notwithstanding that the residential portion of the property is integral to the success of the farm on which it is located.

Representatives of the Farm Credit System contended, however, that the proposal goes too far in the opposite direction and is apt to be over-inclusive by allowing the use of loans secured by a combination farm or business property with little or no residential value. They argued that eliminating the 50 percent test is inconsistent with the housing finance mission of the FHLBank System, that the test does not hinder rural banks' ability to become FHLBank members, and that rural banks do not have less demand for conventional single family and multifamily mortgages. They also argued that the Finance Board failed to consider the practical consequences and safety and soundness risks of the proposal.

IV. Adoption of Revised Standard in the Final Rule

After considering the information received in the comment letters, as well as its own resources, the Finance Board has decided to adopt the final rule with one substantive change from the proposed rule, and to limit the applicability of that change to community financial institutions, which are defined as those of a certain asset size or less. Each of those actions is intended to address concerns raised by commenters about the possible overbreadth of the proposed rule. The changes will apply to both the membership and advances collateral provisions, and are intended to limit qualifying loans to combination farm/residence and combination business/residence loans that have the requisite residential nexus, and to exclude large agribusiness and other large commercial loans, which do not. Specifically, the final rule amends the definition of ''home mortgage loan'' in § 933.1(n)(1)(iii) of the membership regulation to include a loan secured by ''combination business or farm property, on which is located a permanent structure actually used as a residence (other than for temporary or seasonal housing), *where the residence constitutes an integral part of the property.*'' *See* § 933.1(n)(1)(iii) (emphasis added). That revision would apply only to ''community financial institutions,'' which the final rule defines as institutions with average total assets of $500,000,000 or less, based on the average of total assets over the prior three years. For larger institutions, the current 50 percent test would continue to apply. The definition of ''residential mortgage loan'' in § 933.1(bb)(1) of the membership regulation, because it already includes ''home mortgage loans,'' as defined by these amendments, need not be specifically amended. *See* 12 CFR 933.1(bb)(1). The final rule amends the definition of ''residential real property'' in § 935.1 of the advances regulation in the same manner. Thus, eligible collateral will include loans secured by ''combination business or farm property, on which is located a permanent structure actually used as a residence (other than for temporary or seasonal housing), *where the residence constitutes an integral part of the property.*'' *See* § 935.1 (emphasis added). As with the membership provisions, this amendment would apply only for institutions with average total assets of $500,000,000 or less over the prior three years; larger institutions would remain subject to the 50 percent test.

V. Authority and Reasons for Changing the 50 Percent Test

A. Finance Board's General Statutory Authority

Congress has offered no guidance on how the Finance Board should deal with combination properties. The Bank Act provides no definition of ''residential mortgage loan,'' which is the operative term for purposes of the 10 percent requirement, nor does it speak to what combination properties may be encompassed by the term. *See* 12 U.S.C. 1424(a)(2)(A). The Bank Act does define a ''home mortgage loan'' as ''a loan

made by a member or a nonmember borrower upon the security of a home mortgage.'' *See id.* section 1422(5). The Bank Act also defines a ''home mortgage'' generally as a mortgage upon real estate ''upon which is located, or which comprises or includes, one or more homes or other dwelling units, all of which may be defined by the [Finance] Board.'' *See id.* section 1422(6). The statute does not speak directly to the issue of what constitutes a combination property for purposes of these definitions, nor does the language used by Congress (''upon which is located, or which comprises or includes'') suggest that the residential portion of a combination property must meet any specified threshold in order for a mortgage on such property to qualify as a ''home mortgage.'' Indeed, the only statutory mandate, with respect to eligibility for membership, is that the loan must be secured by real estate on which there is located, or which comprises or includes, a home or dwelling unit. *See id.* Moreover, the statute expressly authorizes the Finance Board to define all of those terms.

Congress has offered no more guidance in the context of eligible collateral for advances. Section 10(a) of the Bank Act authorizes each FHLBank to make secured advances to its members upon collateral sufficient, in the judgment of the FHLBank, to fully secure the advances. *See id.* section 1430(a). The Bank Act sets forth the types of collateral that may secure an advance, including ''[f]ully disbursed, whole first mortgages on *improved residential property* (not more than 90 days delinquent).'' *See id.* section 1430(a)(1) (emphasis added). Again, with regard to what is encompassed by ''residential property'' or ''improved residential property,'' Congress has opted to remain silent and has not defined the terms. Thus, with respect to the use of whole first mortgages as collateral for advances, the only statutory mandate is that they attach to real property that previously has been improved by the construction of a residence. *See id.*

In considering the comments and determining the terms of the final rule, the Finance Board has been mindful of the requirement that it is bound ultimately by the ''unambiguously expressed intent of Congress.'' *See Chevron U.S.A., Inc.* v. *Natural Resources Defense Council, Inc.*, 467 U.S. 837, 842–43 (1984) (*Chevron*); *Independent Banks Association of America, and American Bankers Association* v. *Farm Credit Administration*, Civil Action No. 97–00695 (Memorandum Opinion) (Nov. 24, 1997) at 8 (*IBAA*). As noted previously, Congress has opted not to define ''residential mortgage loan'' and ''improved residential property,'' which are the operative terms in the Bank Act underlying these amendments to the membership and advances regulations. Moreover, the only terms that Congress has defined, ''home mortgage'' and ''home mortgage loan,'' are not implicated in the statutory provisions here at issue. Even if they were, Congress has defined them in such a way that does not address combination properties, and Congress has expressly authorized the Finance Board to define the terms of the definitions. Because there is nothing in the plain language of the Bank Act that mandates that the residential portion of combination properties constitute a specified percentage of the property's total appraised value, the Finance Board, in the exercise of its informed discretion, must interpret ''residential mortgage loan'' and ''improved residential property'' for this purpose and must do so in a manner that is ''permissible'' in light of the statute's structure and purpose. *See Chevron*, 467 U.S. at 843–45; *IBAA* at 8.

B. Reasons for Changing the 50 Percent Test

1. Bank Act and Legislative History Do Not Provide Particular Direction

Just as there is nothing in the plain language of the Bank Act that suggests how to define ''residential mortgage loan'' and ''improved residential property,'' there is nothing in the legislative history of the Bank Act that indicates an intent of Congress about how to define these terms, both of which were adopted by the Financial Institutions Reform, Recovery, and Enforcement Act of 1989 (FIRREA), Pub. Law 101–73, 108 Stat. 183 (August 9, 1989). *See* FIRREA, §§ 704(a), 714(a). FIRREA added the 10 percent ''residential mortgage loans'' requirement to section 4 of the Bank Act. *See* FIRREA, § 704(a). The Conference Report accompanying FIRREA states that, in order to qualify for membership in a FHLBank, insured depository institutions ''must have at least 10 percent of their assets in residential mortgage loans, including 1–4 family, multifamily and funded residential construction loans, to qualify for membership.'' *See* Joint Explanatory Statement of the Committee of Conference, H.R. Conf. Rep. 101–222, 101st Cong., 1st Sess. at 424 (1989) (FIRREA Conference Report). That statement is not particularly helpful because the use of the term ''including'' indicates that it is at best a non-exclusive illustrative list of some types of loans that Congress viewed as qualifying as ''residential mortgage loans.''

The legislative history also indicates that the 10 percent requirement was the product of a legislative compromise. The Senate bill would have required a commercial bank to meet the Qualified Thrift Lender (QTL) test, as revised by the Senate bill, in order to be eligible for FHLBank membership. The QTL test, both before and after FIRREA, required a savings association to maintain a certain percentage of its assets in ''qualified thrift investments'' (QTIs), which FIRREA defined in some detail. The FIRREA Conference Report describes QTIs as ''housing finance and related activities.'' *See id.* at 407. The House bill would not have required commercial banks to meet any quantitative assets test to be eligible for FHLBank membership. In conference, the agreed upon compromise was to replace the Senate's QTL threshold test with the 10 percent residential mortgage loans requirement.

The understanding of the Congress in reaching this compromise is not evident from the legislative history. What is evident from the statutes, however, is that Congress chose diametrically opposed approaches for dealing with the concepts of QTIs and ''residential mortgage loans'' or ''improved residential property,'' respectively. Congress took great care to define by statute the categories of assets that could be considered to be QTIs. *See* FIRREA, § 303(a). Moreover, Congress quite clearly expressed its intent that the QTI categories established by statute were not to be modified, stating that the QTI assets ''are specifically defined so as to prevent the inclusion of other assets by regulatory interpretation.'' *See* FIRREA Conference Report at 407. In contrast, Congress did not define what may be included in ''residential mortgage loans'' for purposes of the 10 percent requirement, nor did it include any comparable language in the FIRREA Conference Report. If any inference can be drawn from this meager legislative history, it is that Congress must have intended to leave the implementation of these terms to the informed judgment of the Finance Board. Had it intended otherwise, it could have defined the terms by statute or unequivocally expressed its intent as to how the provisions are to be applied, both of which it did, in the same law, for the QTL test.

Regarding eligible collateral for advances, prior to FIRREA each FHLBank was authorized to make

secured advances to its members upon such security as the Federal Home Loan Bank Board (FHLBB) may prescribe. *See* 12 U.S.C. 1430(a) (1989). FIRREA amended section 10(a) to establish specific categories of eligible collateral that a FHLBank may accept as security for advances to members. *See* FIRREA, § 714(a). Section 10(a)(1) eligible collateral includes ''fully disbursed, whole first mortgages on *improved residential property* (not more than 90 days delinquent). *See* 12 U.S.C. 1430(a)(1) (emphasis added). The FIRREA Conference Report refers to the eligible collateral as ''low risk assets'' and describes the section 10(a)(1) collateral generally as ''current first residential mortgage loans.'' *See* FIRREA Conference Report at 427. The FIRREA Conference Report does not further define ''improved residential property'' or ''residential mortgage loans'' for advances collateral purposes. For the reasons described for membership purposes, it appears as well that Congress intended to allow the Finance Board to further define these terms.

2. The 50 Percent Test Is Purely a Regulatory Creation That Can Be Changed for Good Reason

The 50 percent test was purely a regulatory creation of the Finance Board, adopted on the assumption that requiring at least half of the value of the combination property to be attributable to a residence would ensure that such properties possess the residential nexus required by the statute and still meet the housing finance needs of rural and other communities. In retrospect, it appears that the decision to rely on the 50 percent test in all cases was unduly restrictive, because properties not meeting the test still might possess substantial residential characteristics that could be recognized for membership and advances collateral purposes, consistent with the statute. After considering the comments in favor of the proposal, the Finance Board is persuaded that the 50 percent test is not operating in practice to serve the purposes intended. Indeed, it appears more likely that the test operates in some cases to frustrate the mission of the FHLBank System by excluding important elements of both rural and urban housing finance markets. The Finance Board is particularly concerned about comments indicating that the test discriminates against lower income persons, effectively precluding current and prospective FHLBank members from using FHLBank services to address the housing finance needs of that segment of the population.

As a general matter, an agency is free to change its interpretation of its statute so long as its actions are rational, reasonable, not arbitrary and capricious, involve no clear error of judgment, and a satisfactory explanation for its actions is included in the record. *See, e.g.,* 5 U.S.C. 706(2)(A); *Motor Vehicle Mfrs. Ass'n of United States, Inc.* v. *State Farm Mutual Auto. Ins. Co.,* 463 U.S. 29, 41–43 (1983); *Camp* v. *Pitts,* 411 U.S. 138, 142 (1973) (per curiam); *IBAA,* at 8–9. This test is ''not particularly demanding,'' even when the agency action consists of a change in a long-standing regulatory position on a particular issue. *See, e.g., Republican Nat. Committee* v. *Federal Election Com'n.,* 76 F.3d 400, 407 (D.C. Cir. 1996), *cert. denied,* 117 S.Ct. 682 (1997); *IBAA* at 9. In fact, an agency is charged with the responsibility of continually evaluating the appropriateness of its regulatory policy, even regulatory policy already adopted. *See Chevron,* 467 U.S. at 863–64; *IBAA* at 9.

3. Specific Reasons for Changing the 50 Percent Test

Commenters supporting the proposal confirmed that it would further the FHLBank System's housing finance mission by making available a needed source of funding for combination farm/residential loans, which are important to rural communities. Commenters also confirmed that the 50 percent test is under-inclusive, allowing only those combination loans secured by very small farms to be used for membership eligibility and advances collateral purposes. No commenter contended that the 50 percent test precisely captures all of the family farms or businesses that make up combination properties having a sufficient residential nexus. The Finance Board is of the view that the 50 percent test is unnecessarily severe in excluding bona fide residences simply because the non-residential portion may have a greater value than the residential portion.

One difficulty in relying exclusively on an objective test, such as the 50 percent test, is that it is apt to be over- or under-inclusive because of geographic variations. Another difficulty with the 50 percent test is that it may discriminate against lower income individuals, who can afford only a modest residence on their farm, in favor of more affluent persons, who can place a more expensive residence on the same acreage. One commenter raised precisely that issue, providing examples of the value of certain types of residences in relation to given acreage of farmland. A rule that encourages the FHLBanks and their members to ignore the housing finance needs of the lower income segments of their communities in favor of more wealthy individuals is not consistent with carrying out the housing finance and community investment mission of the FHLBanks, which relates to all segments of the market.

Farm Credit System commenters contended, however, that the proposal to eliminate the 50 percent test without providing a substitute standard went too far in the opposite direction and is apt to be over-inclusive by allowing the use of loans secured by a combination business or farm property, even if the property were to possess only the barest of residential characteristics. The Finance Board believes that there may be merit in that argument, at least on the point that the proposed rule might be construed by some as allowing properties with only the slightest residential component to be included as residential property. The proposal was not intended to be applied in the manner suggested by the commenters. Nor was it intended to allow a FHLBank to characterize large agribusiness and other large commercial loans as residential loans. Instead, it was intended to make the definitions recognize and conform to the practical realities of the residential housing finance markets in rural communities. The Finance Board agrees that the final rule should incorporate some further standard that more clearly expresses the Finance Board's intention to preclude the use of loans having only minimal residential characteristics.

Therefore, the Finance Board is revising the definitions of ''home mortgage loan'' and ''residential real property'' in the final rule to include a standard that would limit qualifying loans to combination farm/residence and combination business/residence loans with a sufficient residential nexus. The final rule also limits the application of the revised definition to institutions with assets of $500,000,000 or less. By narrowing the substance of the definition and by limiting its applicability, the Finance Board intends to target the benefits of the rule change more precisely on the housing finance and community investment mission of the FHLBank System, and to exclude the types of large agribusiness and other large commercial loans that were of concern to some commenters. Specifically, the final rule amends the definition of ''home mortgage loan'' in § 933.1(n)(1)(iii) of the membership regulation to include a loan secured by ''combination business or farm property, on which is located a permanent structure actually used as a residence

(other than for temporary or seasonal housing), *where the residence constitutes an integral part of the property.*'' *See* § 933.1(n)(1)(iii) (emphasis added). The amended rule would apply only to institutions with average total assets of $500,000,000 or less, determined over a three-year period; for larger institutions, the current 50 percent test would remain in effect. The definition of ''residential mortgage loan'' in § 933.1(bb)(1) of the membership regulation includes the term ''home mortgage loans,'' as defined in § 933.1(n)(1)(iii), and therefore, need not be specifically amended in order to include these revisions. *See* 12 CFR 933.1(bb)(1). The final rule amends the definition of ''residential real property'' in § 935.1 of the advances regulation in a similar manner. *See* § 935.1.

The intent of the Finance Board in adding the ''integral'' requirement is to create a standard that will include only those combination properties where the residence is inextricably linked to the non-residential portion, such as in what is commonly understood as a family farm or a family business with a residence ''above the store.'' What constitutes such a property will vary from region to region across the country; what constitutes a family farm in the western states, for example, might well be larger in size than what constitutes a family farm in New England, although the residential portion of each property may be of comparable size. The Finance Board believes adding the ''integral'' requirement will allow additional latitude for the FHLBanks by providing for the inclusion of loans secured by property containing a residence whose value cannot be inconsequential in relation to the overall value of the property, while excluding the types of large agribusiness and other large commercial loans that concerned the commenters.

By adopting a more subjective standard, the Finance Board intends to allow the FHLBanks, which are in a better position to know what constitutes a family farm or business within their districts, to determine for themselves which combination properties include a residence that is so inextricably linked to the remainder of the property as to be integral to the property as a whole. That is a particularly fact-specific determination. For example, the ''integral'' standard would not necessarily preclude non-contiguous farm parcels that secure the same loan, so long as, in the judgment of the FHLBank, all of the parcels satisfy the ''integral'' standard. Clearly, a parcel's proximity to the residence is apt to be a principal consideration in determining whether the two properties are ''inextricably linked'' for these purposes. In any event, these would be matters for the FHLBank to address. Likewise, the FHLBank must determine how much documentation shall be provided by prospective and current members in order to show that particular loans and their collateral satisfy the standard. The Finance Board expects to review the FHLBanks' implementation of the standard as part of the annual examination process and will monitor compliance with this provision.

Limiting the applicability of the revised definitions to institutions with assets of $500,000,000 or less would further address the concerns of some commenters that the proposed rule could be manipulated to allow very large commercial and large agribusiness loans to be considered as ''residential'' simply by including a residence on the underlying property. The Finance Board never intended the proposed rule to encompass purely commercial or business loans, and has incorporated the ''integral'' standard into the final rule in order to ensure that any combination loan used for membership or collateral purposes would have the requisite residential nexus. Nonetheless, the Finance Board also believes that the inclusion of an additional safeguard against the concerns expressed by the commenters would be consistent with its goals and with the Bank Act.

One means of lessening the likelihood that an institution could mischaracterize large commercial or large agribusiness loans as ''residential'' is to limit the maximum size of the loans that may qualify under the ''integral'' standard. That result may be achieved indirectly by limiting the size of the institutions that may take advantage of the amended rule, because the maximum dollar amount of loans that a depository institution may make is tied to its capital levels, which in turn are a function of its size. As a general matter, depository institutions are barred from extending credit to any one borrower in an amount exceeding 15 percent of their capital and surplus. 12 U.S.C. 84(a)(1). That lending limit applies to the aggregate amount of all loans made to a single ''borrower,'' which term may encompass other related persons and entities. *See* 12 CFR 32.5.

Although the dollar amount of the lending limit will vary from institution to institution, the approximate cap for institutions with assets of $500,000,000 or less should be sufficiently small to preclude the type of large commercial and large agribusiness loans cited by the commenters. For example, a depository institution must maintain minimum total capital equal to 8 percent of its ''risk-weighted assets.'' *Id.* Part 3, App. A, Sec. 4(b). Using that as a proxy for actual capital, and assuming a 100 percent risk-weighting (which in practice is unlikely to be the case), an institution with assets of $500,000,000 might have capital of approximately $40,000,000, with a lending limit of approximately $6,000,000. An institution with $100,000,000 in assets might have a lending limit of approximately $1,200,000. Those limits would apply to the total amount of all loans made to a single borrower, and thus would encompass both residential loans of the type permitted under these amendments, as well as any commercial or personal loans. Moreover, as a matter of sound banking practice, depository institutions do not generally lend to the full amount permitted under their lending limit, so the Finance Board anticipates that the dollar amounts of loans made are apt to be considerably smaller than these rough estimates. The Finance Board believes that effectively placing the qualifying loans within the lending limits of members and prospective members should help ensure that the loan amounts, and hence their purposes, are more likely to be for bona fide residential combination properties and not for large commercial or large agribusiness loans.

4. Other Alternatives Considered

In attempting to reconcile the competing interests of commenters, the Finance Board considered various other options for defining qualifying ''residential mortgage loans'' and ''residential real property.'' As discussed further below, in the Finance Board's view, none of these alternatives would satisfactorily achieve the goal of including true combination family farm and business loans, both of which have the residential nexus required by the Bank Act, while excluding large agribusiness and other large commercial loans, which do not.

For example, the Finance Board considered adopting a specific percentage test other than the 50 percent test. Such a test would ensure that the property securing the loan has a greater residential component than under the proposal, while continuing to qualify more loans that now fail the 50 percent test. However, such a test would establish a national standard that likely would remain under-inclusive, that could not reflect differences in local real estate values, and would continue to exclude from membership and borrowing any rural institutions with combination farm or business loans that

could not meet the reduced percentage test, regardless of whether the underlying properties included bona fide residences. For example, as a commenter pointed out, even such a modified test likely would exclude family ranches in areas where the land is very valuable relative to the residence. The test also would create operational difficulties where the existing appraisals held by the members originating the loan do not separate the value of the residence from the value of the entire property.

The Finance Board also considered adopting a specific acreage limit or dollar limit as a proxy for identifying a family farm or business, *i.e.*, the combined farm property securing the loan could not exceed a specific acreage limit, or the combination farm or business loan could not exceed a specific dollar amount. If the acreage limit or dollar limit were set low enough, the standard likely would qualify small combination family farm or business loans, while excluding large agricultural and other business loans. However, as pointed out by a commenter, such limits once again would establish national standards that cannot reflect differences in local business operations and real estate values. The acreage size limit likely would be under-inclusive, excluding some large-acreage farms that would be considered to be family farms in certain locales, such as ranching areas. The dollar limit likely would have the same problem, effectively requiring the establishment of a nationwide standard that would not necessarily reflect local market differences. In addition, an acreage limit or dollar limit, by itself, would not necessarily guarantee an adequate residential nexus, which the statute requires.

One FHLBank commenter suggested that the Finance Board adopt an employee-based or ownership-based standard as a surrogate for small combination family farm and business loans. Such an approach would limit a qualifying farm or business obtaining the loan to no more than a specific number of full-time equivalent employees. The commenter suggested using 100 employees as an appropriate level. The commenter also proposed limiting a farm or business corporation obtaining the loan to no more than a specific number of shareholders, such as 10 shareholders. Such standards likely would encompass many of the type of loans intended by the Finance Board, while excluding large agricultural and other large business loans. However, again, this approach would establish a national standard that would not work in all locales. It also would be very difficult for the Finance Board to ascertain how many employees or shareholders are typical for a family farm or business throughout the country, and then craft a regulation based on that information. In addition, an employee or shareholder test, by itself, would not necessarily guarantee an adequate residential nexus, which the statute requires.

Another option considered was to require that the combination farm or business property securing the loan be owner-occupied. Such a standard would exclude loans secured by large farms with only a caretaker's residence located on the property. However, a commenter indicated that this standard would be under-inclusive because it would exclude a significant number of combination family farm or business loans where a family member lives in the residence on the property but the residence is owned in the name of another family member or a family-owned corporation. Defining ownership also could create problems in implementation of the standard, and possible conflicts with state laws.

Another option presented was to limit the farm or business obtaining the loan to family partnerships or proprietorships, *i.e.*, not corporations, on the theory that this would serve as a surrogate for small combination family farm and business loans. However, as a commenter pointed out, such a standard also would be under-inclusive because it would eliminate many small family farms that are incorporated for tax or other reasons.

The Finance Board also considered an option supported by a FHLBank commenter to establish a ''materiality'' standard for the residential portion of the combination property, with each FHLBank adopting its own criteria for determining ''materiality'' based on local conditions. Such a standard could be an independent requirement or combined with a reduced percentage test. The standard would ensure that the property securing the loan has a ''material'' residential component, and would reflect differences in local combination farm or business properties, which a national standard cannot do, thereby qualifying more combination farm or business loans held by rural institutions that might otherwise fail the 50 percent test or a reduced percentage test. However, the term ''material'' is a term of art in other areas of the law, such as the federal securities laws, and its use here might prompt unintended and undue reliance on a standard established under a body of law unrelated to the FHLBanks.

C. Comments on Finance Board's Authority to Change the 50 Percent Test

1. Mission and Goals of the FHLBank System

The Farm Credit System commenters contended that the proposed rule would be inconsistent with the housing finance mission of the FHLBank System, principally because it would have allowed the use of loans for membership and collateral purposes that are not predominantly residential in nature. As described previously, the final rule requires not only that any eligible combination property must include a bona fide permanent residence, but that the residential component of the property must be ''integral'' to, or inextricably linked with, the overall parcel.

The Finance Board believes that the ''integral'' standard will ensure that any loan secured by such combination property will have the necessary residential nexus required by the Bank Act, and thus will be consistent with the FHLBanks' housing finance mission. The ''integral'' standard may well allow the use of some loans secured by combination properties even if the value of the residential portion of the property does not predominate, but the Bank Act clearly permits that possibility, for reasons discussed previously. Moreover, the housing finance mission of the FHLBanks includes a community investment component, and the final rule is consistent with that aspect of the mission as well. In 1989, the Congress mandated that each FHLBank must establish a Community Investment Program (CIP); Congress also expressly permitted the FHLBanks to establish additional community investment cash advance programs (Section 10(j)(10) programs). *See* 12 U.S.C. 1430(i), (j)(10).

Under the CIP, ''community-oriented mortgage lending'' includes loans to finance commercial and economic development activities that benefit low- and moderate-income families or activities that are located in low- and moderate-income neighborhoods. *Id.* at 1430(j)(2). The Finance Board previously has determined that such targeted commercial and economic development lending constitutes ''residential housing finance,'' for purposes of allowing long-term CIP advances. *See* CIP Policy Statement, Board Resolution No. 92–533 (July 17, 1992); 12 CFR 935.1, 935.14(b)(2). The section 10(j)(10) provisions do not specify any targeting requirements, which suggests that Congress contemplated that Section 10(j)(10) programs need not have the same targeting or other eligibility

requirements as are required under the CIP.

It is possible under these provisions for a FHLBank to fund targeted commercial or economic development that has no ''residential'' component, at least in the sense contemplated by the Farm Credit System commenters. Yet, the Finance Board has determined that such funding would be part of the FHLBank's housing finance mission, as described above. It would be anomalous to find that a targeted loan for wholly commercial or economic development purposes is so clearly within the mission of the FHLBanks, but that a combination loan, even if similarly targeted, would somehow be beyond the housing finance mission because it may be in part related to a commercial business or farm property. The Finance Board believes that some number of rural and urban combination properties will necessarily be located in low-and moderate-income neighborhoods. Further, limiting the size of the institutions eligible to use the revised standard, and thereby limiting the size of the combination loans to be made by these institutions, is itself a method of targeting the use of this standard to the communities and uses most in need of the relief. To accept the reasoning of the Farm Credit System commenters and conclude otherwise would require the Finance Board to ignore the community investment aspect of the housing finance mission, which it is not prepared to do. In the view of the Finance Board, the final rule is consistent with both the historical concept of residential housing finance, as well as the more broadly defined concept incorporated by Congress into the Bank Act in 1989.

2. ''Rational'' Basis for Changing Prior Agency Statutory Interpretation

Some of the commenters opposing the proposed rule contended that the proposal should be withdrawn as inconsistent with the Finance Board's prior interpretations of the statutory provisions, suggesting that the Finance Board has ignored those interpretations and is obliged to adhere to them. The commenters noted, for example, that in the original rulemaking when the 50 percent test for advances collateral purposes was adopted, the Finance Board rejected a commenter's suggestion to set the limit at 10 percent, explaining that the higher percentage better reflected the FHLBanks' focus on housing finance. *See* 58 FR 29456, 29462 (May 20, 1993). Opposing commenters now question the authority of the Finance Board to take what they believe is a conflicting position.

The Finance Board by no means has ignored its prior positions and interpretations relating to the 50 percent test. To the contrary, the Finance Board has carefully and thoroughly considered its past approaches to this issue, all of the comments and suggestions received in response to the proposed rule, and various alternative approaches. The Finance Board has elected now to adopt an approach that is consistent with its prior intentions yet, at the same time, better accomplishes its intentions, is more flexible and allows for more subjective analysis in lieu of rigid adherence to a fixed percentage test.

As previously noted, an agency is free to change its interpretation of its statute so long as its actions are rational, reasonable, not arbitrary and capricious, involve no clear error of judgment, and a satisfactory explanation for its actions is included within the record. *See, e.g.,* 5 U.S.C. 706(2)(A); *Motor Vehicle Mfrs. Ass'n,* 463 U.S. at 41–43; *Camp,* 411 U.S. at 142; *IBAA,* at 8–9.

Nothing in the Bank Act or in the Administrative Procedure Act alters the agency's authority in this regard. In fact, deference is given to the administering agency's construction of an ambiguous statute if it is ''permissible'' or ''reasonable'' in light of the statute's overall structure and goals. *Chevron,* 467 U.S. at 843–45. Deference to the Finance Board's policy judgments is particularly appropriate given its expertise and the broad discretion Congress has conferred upon it. The Finance Board regulates in an area—the financial services context where courts have customarily deferred to evolving administrative interpretations of statutory language as a means of accommodating changes in the market place and customers' service needs. *See, e.g., Clarke* v. *Securities Industry Ass'n,* 479 U.S. 388, 403–09 (1987); *Board of Governors of Federal Reserve System* v. *Investment Company Institute,* 450 U.S. 46, 56–58, 68 (1981). A notable example of such deference is *IBAA* v. *Clarke,* where the court, deferring to a statutory construction by a federal banking regulatory agency that recognized ''the realities of banking in the nineties'' and that ''the financial industry is complex and changing,'' concluded that ''[t]his kind of regulatory and competitive environment is especially suited to the expert judgment of regulators accustomed to dealing with the industry day to day.'' 917 F.2d 1126, 1129 (8th Cir. 1990). Thus, it is firmly established that the Finance Board is entitled to deference as the agency charged with administering the Bank Act. *See Rust* v. *Sullivan,* 500 U.S. 173, 184, 186–187 (1991).

Change in statutory interpretation is not a problem ''since the whole point of *Chevron* is to leave the discretion provided by the ambiguities of a statute with the implementing agency.'' *Smiley* v. *Citibank (South Dakota), N.A.,* 116 S.Ct. 1730, 1734 (1996). As the U.S. Supreme Court emphasized in *Chevron,* ''an initial agency interpretation is not instantly carved in stone. On the contrary, the agency, to engage in informed rulemaking, must consider varying interpretations and the wisdom of its policy on a continuing basis.'' 467 U.S. at 863–64. That is what the Finance Board is doing through this rulemaking.

3. Ability of Rural Banks to Become FHLBank Members; Need for FHLBank Credit

Some commenters argued that the Finance Board offered no reasoned explanation or empirical data to support its departure from prior practice. The Farm Credit System trade association argued that the 50 percent test should be retained because it does not hinder rural banks' ability to become FHLBank members, and rural banks do not have less demand for conventional single family and multifamily mortgages.

As an initial matter, there is nothing that requires the Finance Board to conduct empirical studies as a prerequisite to conducting a rulemaking proceeding. Indeed, there are any number of issues on which an agency may regulate, such as interpretations of a statute, where empirical analysis would have little relevance or benefit. An empirical study of rural credit and housing markets might better inform the Finance Board about certain aspects of those markets. It would be of no use, however, in determining what minimum residential characteristics are required by Congress in order for loans on combination properties to be eligible for membership and advances collateral purposes, which is the issue addressed by this rule.

That said, in adopting this final rule, the Finance Board has considered studies prepared by other parties as sources of information about the need for alternative funding sources for rural banks and the state of rural credit markets. *See* USDA Report; ''Second Annual Community Bank Competitiveness Study,'' ABA/ABA Banking Journal (Feb. 1998); Farm Credit Situation Survey Report 1997 (American Bankers Association 1997). The Finance Board also has taken into consideration its initial discussions with industry representatives about the shortcomings of the 50 percent test, as well as the comments supporting the proposal, which confirm the need for

alternative funding sources for rural banks and the likelihood that the proposal would address that need. The Finance Board does not believe that it is required to undertake further independent empirical research of the rural credit and housing markets in order to exercise its rulemaking authority.

The Farm Credit System trade association cited to a statement in the USDA Report that, ''[n]ationwide, rural-headquartered commercial banks are as likely to be members of the [FHLBank System] as are other banks'' to support its views. *See* USDA Report at 48 n.19. However, the commenter also acknowledged in a footnote that, ''[n]otwithstanding this conclusion, the [USDA] Report noted that 'rural access' to FHLBank membership was of 'some concern' in three isolated markets.'' What the commenter characterizes as three ''isolated markets'' are in fact three FHLBank districts—Des Moines, Dallas and Topeka—which encompass 14 states. Moreover, the USDA Report indicates that there are a total of 900 ineligible rural banks in these districts. *See id.* The purpose of the Finance Board's rule is to assist some of these 900 rural banks in joining and borrowing from the FHLBank System, as well as to assist current members in increasing their borrowing capacity. Two of the FHLBanks cited in the USDA Report, Des Moines and Topeka, submitted comment letters strongly supporting the proposal. The Des Moines letter stated that eliminating the current 50 percent test will enable over 600 of the FHLBank's current small community bank members with assets under $100 million to fully use FHLBank funding. In addition, the FHLBank estimated that the expansion of the membership eligibility criteria to include these combination loans will enable approximately 700 more financial institutions to join the Des Moines FHLBank. (The USDA Report estimated 322 ineligible rural banks in the Des Moines district, *see id.;* therefore, it is assumed that the estimate of 700 ineligible institutions provided by the Des Moines FHLBank covers non-rural as well as rural institutions.)

In addition, the USDA Report states that there are concerns about whether rural offices of large urban banks effectively serve their rural customers. *See id.* at 63. The USDA Report also states that rural FHLBank members are larger and hold a greater ratio of mortgage-related assets than other rural banks that are not FHLBank members. *See id.* at 48 n.19. This suggests that smaller banks and their rural customers may be underserved at present and that increased FHLBank access by small rural banks is needed. Notwithstanding the arguments of the Farm Credit System commenters, it appears that the information in the USDA Report actually supports the Finance Board's view that the 50 percent test operates in practice to hinder the ability of rural banks to become FHLBank members.

In addition, in a subsequent comment letter the Farm Credit System trade association suggested that it is concerned with commercial bank competition in the agricultural markets and indicated that there are already two government sponsored enterprises (GSEs) serving the credit needs of agriculture—the Farm Credit System and the Federal Agricultural Mortgage Corporation (Farmer Mac). As previously stated, many family farm/residential loans, while not meeting the 50 percent test, have a sufficient residential nexus to ensure consistency with the FHLBank System's housing finance and community investment mission. Because it is within the missions of the Farm Credit System and Farmer Mac, as well as the FHLBank System, to support the rural housing markets, there is clearly some overlap in the markets served by different GSEs. Such overlap can result in competition among GSEs.

The primary benefit afforded to GSEs is the ability to borrow at rates only slightly higher than Treasury borrowing rates. The Farm Credit System, Farmer Mac and the FHLBanks all receive this benefit by virtue of their GSE status. In return for this benefit, GSEs have a responsibility to fulfill a public policy mission. One of the ways that GSEs fulfill their mission is by passing along their funding advantage to the end user. The FHLBank System's housing finance and community investment mission requires the FHLBanks to provide funds to financial institutions in all markets, including rural markets that also may receive some assistance from one or more other GSEs. To the extent that other GSEs also provide government subsidized assistance to certain rural markets, the revisions to the FHLBanks' membership and collateral provisions do not result in an introduction of a new subsidy to these markets, but rather provide another source of government-subsidized funding. In fact, competition among GSEs can be viewed as a positive development because it helps ensure that government subsidies flow to the end user and not to the GSE's managers and shareholders.

The Farm Credit System trade association also argued that its analysis of the likely membership effects of the proposed rule does not suggest that rural banks would uniquely benefit from elimination of the 50 percent test. The commenter indicated that, based on its own analysis of the loan portfolios of non-metropolitan and metropolitan banks, membership eligibility for non-metropolitan banks would increase approximately 10.5 percent, while membership eligibility for metropolitan banks would similarly increase by more than 8 percent.

Although the proposed rule was issued in response to concerns raised by rural banks, and is intended specifically to assist rural banks in accessing the FHLBank System, the Finance Board did not intend that such benefits accrue solely to rural banks. These amendments apply as well to combination properties involving a non-farm business and a residence, and it is anticipated that loans secured by such properties located in urban areas also will be used by members and prospective members as a result of this rule. The mission of the FHLBank System includes the provision of funds to financial institutions located in all areas of the country, and to the extent the rule assists non-rural, as well as rural, banks, it is entirely consistent with the FHLBank System's mission.

The Farm Credit System trade association also claimed that statements made in support of the proposed rule contradict and must be reconciled with past Finance Board statements to Congress. Specifically, the Finance Board has stated that ''[e]ligible [other real estate related] collateral for [FHLBank] System advances is already very broad,'' and ''[t]here is no evidence that advance demand is constrained by a lack of eligible collateral.'' *See* Finance Board *Report on the Structure and Role of the Federal Home Loan Bank System* at 167 (March 19, 1993).

The advantages of expanding the scope of that category of eligible collateral were not considered to be significant at that time. *See id.* However, as acknowledged by the commenter, the Finance Board separately recommended that Congress permit the FHLBanks to accept a broader range of collateral to secure advances in order to carry out the FHLBank System's mission as defined by the Finance Board. *See id.* In addition, as explained in the proposed rule, since adoption of the 50 percent test, the Finance Board has received new information from members and nonmembers of the FHLBank System indicating that the 50 percent test has proven to be under-inclusive and, consequently, is constraining advance demand in certain markets. This was confirmed by a significant number of commenters, many of whom contend

that eliminating the 50 percent test would further the FHLBank System's housing finance mission by making available a needed source of funding for combination farm/residential loans.

4. Practical Consequences of Changing the 50 Percent Test

The Farm Credit System trade association also argued that the Finance Board failed to consider the practical consequences of the proposal. For instance, the commenter stated that the proposed rule did not indicate how, with a substantial increase of eligible collateral, the Finance Board would reconcile the credit demand in rural markets with the potential impact on credit supply. The commenter estimated that more than $18 billion in loans held by non-metropolitan banks could be newly pledged as collateral for FHLBank advances. The commenter argued that such an analysis is one essential predicate to deciding whether the proposed rule is appropriately tailored to the Finance Board's statutory housing mission.

The most likely practical consequences resulting from the final rule are that some number of rural institutions will become eligible to become members of the FHLBank System, will do so, and will borrow from their FHLBank to finance residential housing within their communities. Obviously, if the rule has the desired effect, there should be some corresponding increase in the aggregate amount of advances outstanding, which currently total approximately $208 billion System-wide. The Finance Board has no reason to believe that an additional $18 billion of collateral, assuming for the sake of argument that $18 billion is an accurate figure, will overwhelm the credit markets. For one thing, some portion of that amount will be owned by institutions that choose not to become members, and some will be owned by members who will not borrow to their full potential. Additionally, the FHLBanks all have credit policies that establish discounts for various types of collateral. Given the circumstances and the prudent underwriting by the FHLBanks, the Finance Board would expect that any FHLBank accepting newly-authorized loans on combination properties would significantly discount those loans pledged as collateral. This discounting, or overcollateralization, would further diminish the amount of credit that the newly-authorized collateral could support. Moreover, the insured depository institutions that presumably would be borrowing against this collateral are regulated by other agencies, which require the institutions they regulate to limit asset growth to what is prudent. *See* 12 CFR Part 30, App. A, § II.F. The Finance Board believes that those operational and regulatory checks will preclude any undue consequences in the rural credit markets as a result of this rule.

5. Safety and Soundness Risks of Changing the 50 Percent Test

The Farm Credit System trade association also stated that the Finance Board did not indicate how it will address the fact that a mortgage on a combination property may be less liquid and marketable than a conventional home mortgage. The commenter stated that a safety and soundness issue may arise where a prospective member lender lacks the necessary understanding of the agricultural lending process, which may result in compromised underwriting practices and poor credit decisions in pursuing loans on newly eligible combination properties, increasing the likelihood of loan losses incurred by the FHLBanks.

In fact, the proposed rule discussed at length the fact that any additional risks that might arise if such mortgage loans are used as collateral for advances should be adequately managed in accordance with the current provisions of the advances regulation and FHLBank credit policies. The FHLBanks already accept combination loans, and have expertise in underwriting advances secured by such loans. The final rule, like the current advances regulation, does not mandate that the FHLBanks accept combination farm or business loans as collateral for advances. It merely includes such loans in the category of loans eligible to be accepted by a FHLBank to secure advances.

The FHLBanks already are permitted to accept as collateral for advances to members ''other real estate related collateral'' (provided aggregate outstanding advances secured by such collateral do not exceed 30 percent of the member's capital). *See* 12 U.S.C. 1430(a)(4); 12 CFR 935.9(a)(4). Included in this category of permissible collateral are loans on farms and other agricultural property, commercial mortgage loans, construction loans, land development loans, and second mortgage loans including home equity loans. *See* 12 CFR 935.9(a)(4)(ii). The FHLBanks also may accept multifamily loans as eligible collateral, without being subject to the 30 percent member capital limit. *See* 12 U.S.C. 1430(a)(1); 12 CFR 935.9(a)(1)(i). With respect to each of those types of collateral, the FHLBanks already manage the credit, liquidity, and marketability risks cited by the commenter, as well as other risks, associated with non-one-to-four family residential mortgage collateral. There is no evidence that these revisions will subject the FHLBanks to underwriting tasks that are beyond their ability to manage.

The Finance Board requires that the FHLBanks have such underwriting expertise and credit policies before accepting such loans as collateral. Specifically, the advances regulation requires, among other things, that the FHLBanks establish written procedures for determining the value of collateral securing advances, and that the FHLBanks follow those procedures in ascertaining the value of particular assets offered as collateral. *See* 12 CFR 935.12. The regulation also permits the FHLBanks to require a member to support the valuation of any collateral with an appraisal or other investigation of the collateral as the FHLBank deems necessary. *See id.*

Rural lending often requires collateral valuation practices that may differ significantly from those typically employed in lending on the security of one-to-four family homes. The Finance Board expects each FHLBank to review its collateral valuation procedures, and amend them as necessary to reflect the changes made in the final rule, before accepting as collateral any newly authorized combination properties. The Finance Board also expects that the FHLBanks, as a matter of practice, will conduct careful review and, if necessary, require an appraisal of such collateral, taking into account the additional risks inherent in rural lending and each FHLBank's own capability to evaluate those risks. In addition, the FHLBanks generally require that members pledge additional collateral if the value of their original collateral declines.

Finally, as the regulator of the FHLBanks, the Finance Board's primary responsibility is to ensure that the FHLBanks operate in a financially safe and sound manner. *See* 12 U.S.C. 1422a(a)(3)(A). The Finance Board's oversight of the FHLBanks includes annual on-site examinations and regular off-site review of FHLBank operations. Emphasis is placed on areas of FHLBank operation that could potentially expose the FHLBank and the FHLBank System to risk. As part of the examination process, the Finance Board reviews and evaluates the FHLBanks' management of collateral. Examiners review valuation methodology, discounts applied to collateral, and frequency of review or re-valuation for various types of collateral. Moreover, the loan quality and underwriting practices of the individual members are reviewed regularly by the

primary banking regulators through periodic examinations.

In short, the above-described FHLBank practices, regulatory requirements, and Finance Board examination oversight, do not encourage FHLBank members to approve unsafe or unsound loans that could be pledged to the FHLBanks to secure advances.

In addition, increasing access to the FHLBank System would provide current and prospective members with enhanced risk management options. The USDA Report states that access to funds from GSEs, such as the FHLBanks, enhances liquidity and can improve profitability and risk management of depository financial intermediaries, including commercial banks, credit unions, and thrifts. *See* USDA Report at 97. Risk management is enhanced because GSE funds are available with longer maturities than are usually available on deposits at commercial banks. *See id.* at 98. Advances can be used to control interest rate risk by allowing member banks to match the funding to the maturity, payment structure, prepayment options, and other features of the loans they make. *See id.*

The Finance Board specifically requested comment on whether elimination of the 50 percent test might expose the FHLBanks to any undue risk of loss should a FHLBank need to liquidate the combination mortgage loans it holds as collateral for an advance. *See* 62 FR 53252. Many commenters stated that the proposal would not present safety or soundness risks for the FHLBanks because, as discussed above, the FHLBanks do not lend against the full value of collateral, but rather apply discounts depending on the riskiness of the collateral and the difficulties in valuing it. Commenters also pointed out that the FHLBanks obtain appraisals of collateral from members, and can require additional collateral if necessary.

In addition, commenters noted that combination loans at rural banks are solidly performing and generally exceed the loan quality of the rest of the banking industry, with 1996 net charge-offs on average loans at rural banks at 0.32 percent, while net charge-offs for banks overall were 0.61 percent. One FHLBank commenter noted that the experience of lenders in Iowa during the 1980s ''agricultural crisis'' was that, while there was a substantial decline in value of both one-to-four family properties in rural areas and combination farm/residence properties, the decline was not greater for the combination properties than it was for those that were solely residential. In fact, the combination properties were more likely to be sold since there remained buyers interested in the agricultural portion of the land. Based on this experience, the commenter did not believe that combination property is more volatile than solely residential property located in rural areas. The commenter stated that it planned to hire additional experienced personnel to ensure that, through proper due diligence, its practices are prudent and will not expose the FHLBank to undue risks of loss.

Accordingly, the Finance Board believes that through due diligence, overcollateralization, and prudent credit and collateral risk management procedures and practices, the FHLBanks can adequately prevent undue risk of loss on advances secured by combination loans. Therefore, the Finance Board does not believe that there are undue safety and soundness risks that would suggest that the Finance Board lacks the ''rational'' basis for changing the 50 percent test in the final rule.

VI. Definition of ''Residential Mortgage Loan'' in § 933.1(bb)(8) of the Final Rule

Consistent with the proposed rule, ''residential mortgage loan'' is defined in § 933.1(bb)(8) of the final rule to include, for membership eligibility purposes, loans that finance properties or activities that, if made by a member, would satisfy the statutory requirements for the CIP established under section 10(i) of the Bank Act, or the regulatory requirements established for any community investment cash advance program authorized by section 10(j)(10) of the Bank Act. *See* 12 U.S.C. 1430(i), (j)(10).

The intent of this amendment is to allow such community investment loans to be considered for purposes of eligibility for membership, and to conform the membership regulation more closely to the advances regulation, which already includes loans financed by section 10(i) or section 10(j)(10) advances within the definition of ''residential housing finance assets.'' *See* 12 CFR 935.1. A banking trade association specifically supported the proposed definition.

VII. Regulatory Flexibility Act

The final rule does not impose any additional reporting, recordkeeping, or compliance requirements on prospective or current FHLBank members. Although the Finance Board anticipates that the final rule will be of benefit primarily to small depository institutions, it will not have a disproportionate impact on small entities. Therefore, in accordance with the Regulatory Flexibility Act, the Finance Board hereby certifies that this final rule will not have a significant economic impact on a substantial number of small entities. 5 U.S.C. 605(b).

VIII. Paperwork Reduction Act

The final rule does not contain any collections of information, as defined by the Paperwork Reduction Act of 1995. *See* 44 U.S.C. 3501 *et seq.* Consequently, the Finance Board has not submitted any information to the Office of Management and Budget for review.

List of Subjects

12 CFR Part 933

Federal home loan banks, Reporting and recordkeeping requirements.

12 CFR Part 935

Credit, Federal home loan banks, Reporting and recordkeeping requirements.

Accordingly, the Federal Housing Finance Board hereby amends title 12, chapter IX, parts 933 and 935 of the Code of Federal Regulations as follows:

PART 933–MEMBERS OF THE BANKS

1. The authority citation for part 933 continues to read as follows:

Authority: 12 U.S.C. 1422, 1422a, 1422b, 1423, 1424, 1426, 1430, 1442.

2. Amend § 933.1 by revising paragraph (n)(1)(iii), removing ''or'' at the end of paragraph (bb)(6)(iii), removing the period at the end of paragraph (bb)(7) and adding ''; or'' in its place, and adding paragraph (bb)(8) to read as follows:

§ 933.1 Definitions.

* * * * *

(n) Home mortgage loan * * *

(1) * * *

(iii) Combination business or farm property where at least 50 percent of the total appraised value of the combined property is attributable to the residential portion of the property or, in the case of any community financial institution, combination business or farm property, on which is located a permanent structure actually used as a residence (other than for temporary or seasonal housing), where the residence constitutes an integral part of the property. For purposes of this subparagraph, the term ''community financial institution'' means an institution that has average total assets of $500,000,000 or less, based on an average of total assets over the three preceding years. The Board shall adjust the limit annually based on the annual

increase, if any, in the Consumer Price Index for all urban consumers, as published by the Department of Labor; or

* * * * *

(bb) Residential mortgage loan * * *

(8) Loans that finance properties or activities that, if made by a member, would satisfy the statutory requirements for the Community Investment Program established under section 10(i) of the Act, or the regulatory requirements established for any community investment cash advance program authorized by section 10(j)(10) of the Act.

* * * * *

PART 935—ADVANCES

1. The authority citation for part 935 continues to read as follows:

Authority: 12 U.S.C. 1422a(a)(3), 1422b(a)(1), 1426, 1429, 1430, 1430b, 1431.

2. Amend § 935.1 by revising paragraph (1)(v) in the definition of ''Residential real property'' to read as follows:

§ 935.1 Definitions.

* * * * *

Residential real property * * *

(1) * * *

(v) Combination business or farm property where at least 50 percent of the total appraised value of the combined property is attributable to the residential portion of the property or, in the case of any community financial institution, combination business or farm property, on which is located a permanent structure actually used as a residence (other than for temporary or seasonal housing), where the residence constitutes an integral part of the property. For purposes of this subparagraph, the term ''community financial institution'' means an institution that has average total assets of $500,000,000 or less, based on an average of total assets over the three preceding years. The Board shall adjust the limit annually based on the annual increase, if any, in the Consumer Price Index for all urban consumers, as published by the Department of Labor.

* * * * *

Dated: April 14, 1998.

By the Board of Directors of the Federal Housing Finance Board.

Bruce A. Morrison,

Chairperson.

[FR Doc. 98–17163 Filed 6–26–98; 8:45 am]

BILLING CODE 6725–01–P

DEPARTMENT OF TRANSPORTATION

Federal Aviation Administration

14 CFR Part 39

[Docket No. 97–SW–25–AD; Amendment 39–10635; AD 98–14–01]

RIN 2120–AA64

Airworthiness Directives; Eurocopter France Model AS–350B, BA, B1, B2, and D, and Model AS–355E, F, F1, F2, and N Helicopters

AGENCY: Federal Aviation Administration, DOT.

ACTION: Final rule.

SUMMARY: This amendment adopts a new airworthiness directive (AD), applicable to Model AS–350B, BA, B1, B2, and D, and Model AS–355E, F, F1, F2, and N helicopters, that requires inspections of the main gearbox suspension bi-directional cross-beam (cross-beam) for cracks, and replacement of the cross-beam if a crack is found. This amendment is prompted by several reports of cracks in the cross-beam. The actions specified by this AD are intended to provide a terminating action to prevent failure of the cross-beam that could cause the main gearbox to pivot, resulting in severe vibrations and a subsequent forced landing.

DATES: Effective August 3, 1998.

The incorporation by reference of certain publications listed in the regulations is approved by the Director of the Federal Register as of August 3, 1998.

ADDRESSES: The service information referenced in this AD may be obtained from American Eurocopter Corporation, 2701 Forum Drive, Grand Prairie, Texas 75053–4005, telephone (972) 641–3460, fax (972) 641–3527. This information may be examined at the FAA, Office of the Regional Counsel, Southwest Region, 2601 Meacham Blvd., Room 663, Fort Worth, Texas; or at the Office of the Federal Register, 800 North Capitol Street, NW., suite 700, Washington, DC.

FOR FURTHER INFORMATION CONTACT: Mr. Mike Mathias, Aerospace Engineer, FAA, Rotorcraft Directorate, ASW–111, 2601 Meacham Blvd., Fort Worth, Texas 76137, telephone (817) 222–5123, fax (817) 222–5961.

SUPPLEMENTARY INFORMATION: A proposal to amend part 39 of the Federal Aviation Regulations (14 CFR part 39) to include an airworthiness directive (AD) that is applicable to Model AS–355E, F, F1, F2, and N helicopters was published in the **Federal Register** on March 3, 1998 (63 FR 10349). That action proposed to require visual and dye-penetrant inspections of the cross-beam for cracks, and replacement with an airworthy cross-beam if a crack is found.

Interested persons have been afforded an opportunity to participate in the making of this amendment. Due consideration has been given to the comment received.

The commenter states that the applicability of the AD should exclude helicopters that have been modified in accordance with Eurocopter Service Bulletin No. 63.00.07, applicable to Model AS–350B, BA, B1, B2, and D helicopters, and Eurocopter Service Bulletin No. 63.00.13, applicable to Model AS–355E, F, F1, F2, and N helicopters, both dated April 7, 1997. The FAA agrees that helicopters having the modifications need not be inspected as prescribed in this AD, and that is why the applicability is limited to those model helicopters that have cross-beam, P/N 350A38–1018-all dash numbers, installed. However, a paragraph has been added stating that installation of cross-beams that have the modifications constitutes terminating action for the requirements of this AD.

After careful review of the available data, including the comment noted above, the FAA has determined that air safety and the public interest require the adoption of the rule as proposed with the change described previously. The FAA has determined that this change will neither increase the economic burden on any operator nor increase the scope of the AD.

The FAA estimates that 454 helicopters of U.S. registry will be affected by this AD, that it will take approximately 0.5 work hour per helicopter to accomplish each visual inspection with an estimated average of 150 visual inspections per helicopter, 3 work hours per helicopter to accomplish the dye-penetrant inspection, and 6 work hours per helicopter to replace the cross-beam, if necessary, and that the average labor rate is $60 per work hour. Parts costs will be approximately $6,000 per cross-beam. Based on these figures, the total cost impact of the proposed AD on U.S. operators is estimated to be $5,012,160 to perform an average of 150 visual inspections and one dye-penetrant inspection per helicopter, and to replace the cross-beam on all 454 helicopters.

The regulations adopted herein will not have substantial direct effects on the States, on the relationship between the national government and the States, or on the distribution of power and responsibilities among the various levels of government. Therefore, in accordance with Executive Order 12612,

it is determined that this final rule does not have sufficient federalism implications to warrant the preparation of a Federalism Assessment.

For the reasons discussed above, I certify that this action (1) Is not a ''significant regulatory action'' under Executive Order 12866; (2) is not a ''significant rule'' under DOT Regulatory Policies and Procedures (44 FR 11034, February 26, 1979); and (3) will not have a significant economic impact, positive or negative, on a substantial number of small entities under the criteria of the Regulatory Flexibility Act. A final evaluation has been prepared for this action and it is contained in the Rules Docket. A copy of it may be obtained from the Rules Docket at the location provided under the caption **ADDRESSES.**

List of Subjects in 14 CFR Part 39

Air transportation, Aircraft, Aviation safety, Incorporation by reference, Safety.

Adoption of the Amendment

Accordingly, pursuant to the authority delegated to me by the Administrator, the Federal Aviation Administration amends part 39 of the Federal Aviation Regulations (14 CFR part 39) as follows:

PART 39—AIRWORTHINESS DIRECTIVES

1. The authority citation for part 39 continues to read as follows:

Authority: 49 U.S.C. 106(g), 40113, 44701.

§ 39.13 [Amended]

2. Section 39.13 is amended by adding a new airworthiness directive to read as follows:

AD 98–14–01 Eurocopter France: Amendment 39–10635. Docket No. 97–SW–25–AD.

Applicability: Model AS–350B, BA, B1, B2, and D, and Model AS–355E, F, F1, F2, and N helicopters, with main gearbox suspension bi-directional cross-beam (cross-beam), part number (P/N) 350A38–1018-all dash numbers, installed, certificated in any category.

Note 1: This AD applies to each helicopter identified in the preceding applicability provision, regardless of whether it has been modified, altered, or repaired in the area subject to the requirements of this AD. For helicopters that have been modified, altered, or repaired so that the performance of the requirements of this AD is affected, the owner/operator must use the authority provided in paragraph (e) to request approval from the FAA. This approval may address either no action, if the current configuration eliminates the unsafe condition, or different actions necessary to address the unsafe condition described in this AD. Such a request should include an assessment of the effect of the changed configuration on the unsafe condition addressed by this AD. In no case does the presence of any modification, alteration, or repair remove any helicopter from the applicability of this AD.

Compliance: Required as indicated, unless accomplished previously.

To prevent failure of the cross-beam that could lead to rotation of the main gearbox, resulting in severe vibrations and a subsequent forced landing, accomplish the following:

(a) For cross-beams having 2,000 or more hours time-in-service (TIS) or 10,000 or more operating cycles:

Note 2: The Master Service Recommendations and the flight log contain accepted procedures that are used to determine the cumulative operating cycles on the rotorcraft.

(1) Within 30 hours TIS, and thereafter at intervals not to exceed 30 hours TIS or 150 operating cycles, visually inspect the cross-beam for cracks in accordance with paragraph 2.B.1) of Eurocopter France Service Bulletin No. 05.00.28, applicable to Model AS–350 helicopters, or Eurocopter France Service Bulletin No. 05.00.29, applicable to Model AS–355 helicopters, both dated May 26, 1997.

(2) If a crack is found as a result of the inspections required by paragraph (a)(1) of this AD, remove the cross-beam and replace it with an airworthy cross-beam.

(b) For cross-beams having 5,000 or more hours TIS:

(1) Within 550 hours TIS or 2,750 operating cycles, whichever occurs first, after compliance with paragraph (a)(1) of this AD, perform a dye-penetrant inspection in accordance with paragraph 2.B.2) of Eurocopter France Service Bulletin No. 05.00.28, applicable to Model AS–350 helicopters, or Eurocopter Service Bulletin No. 05.00.29, applicable to Model AS–355 helicopters, both dated May 26, 1996.

(2) If a crack is found as a result of the inspections required by paragraphs (b)(1) of this AD, remove the cross-beam and replace it with an airworthy cross-beam.

(c) Prior to installing any replacement cross-beams, regardless of TIS, inspect the replacement cross-beam in accordance with paragraph (b)(1) of this AD.

(d) Accomplishment of the modifications in accordance with paragraph 2.B of the Accomplishment Instructions in Eurocopter Service Bulletin No. 63.00.07, applicable to Model AS–350B, BA, B1, B2, and D helicopters, or Eurocopter Service Bulletin No. 63.00.13, applicable to Model AS–355E, F, F1, F2, and N helicopters, both dated April 7, 1997, constitutes terminating action for the requirements of this AD.

(e) An alternative method of compliance or adjustment of the compliance time that provides an acceptable level of safety may be used if approved by the Manager, Rotorcraft Standards Staff, FAA, Rotorcraft Directorate. Operators shall submit their requests through an FAA Principal Maintenance Inspector, who may concur or comment and then send it to the Manager, Rotorcraft Certification Office.

Note 3: Information concerning the existence of approved alternative methods of compliance with this AD, if any, may be obtained from the Rotorcraft Certification Office.

(f) Special flight permits may be issued in accordance with §§ 21.197 and 21.199 of the Federal Aviation Regulations (14 CFR 21.197 and 21.199) to operate the helicopter to a location where the requirements of this AD can be accomplished.

(g) The inspections and replacements, if necessary, shall be done in accordance with Eurocopter France Service Bulletin No. 05.00.28, applicable to Model AS–350 helicopters, and Eurocopter France Service Bulletin No. 05.00.29, applicable to Model AS–355 helicopters, both dated May 26, 1997. This incorporation by reference was approved by the Director of the Federal Register in accordance with 5 U.S.C. 552(a) and 1 CFR part 51. Copies may be obtained from American Eurocopter Corporation, 2701 Forum Drive, Grand Prairie, Texas 75053–4005, telephone (972) 641–3460, fax (972) 641–3527. Copies may be inspected at the FAA, Office of the Regional Counsel, Southwest Region, 2601 Meacham Blvd., Room 663, Fort Worth, Texas; or at the Office of the Federal Register, 800 North Capitol Street, NW., suite 700, Washington, DC.

(h) This amendment becomes effective on August 3, 1998.

Note 4: The subject of this AD is addressed in Direction Generale De L'Aviation Civile (France) AD 96–156–071(B)R1 and AD 96–155–053(B)R1, both dated June 4, 1997.

Issued in Fort Worth, Texas, on June 19, 1998.

Eric Bries,

Acting Manager, Rotorcraft Directorate, Aircraft Certification Service.

[FR Doc. 98–17178 Filed 6–26–98; 8:45 am]

BILLING CODE 4910–13–P

DEPARTMENT OF TRANSPORTATION

14 CFR Part 71

[Airspace Docket No. 98–AGL–20]

Modification of Class E Airspace; Marion, OH; Correction

AGENCY: Federal Aviation Administration (FAA), DOT.

ACTION: Final rule; correction.

SUMMARY: This action corrects one error in the legal description of a final rule that was published in the **Federal Register** on June 5, 1998 (63 FR 30594), Airspace Docket No. 98–AGL–20. The final rule modified Class E Airspace at Marion, OH.

EFFECTIVE DATE: 0901 UTC August 13, 1998.

FOR FURTHER INFORMATION CONTACT: Michelle M. Behm, Air Traffic Division, Airspace Branch, AGL–520, Federal Aviation Administration, 2300 East

Devon Avenue, Des Plaines, IL 60018, telephone: (847) 294–7477.

SUPPLEMENTARY INFORMATION:

History

Federal Register Document 98–15039, Airspace Docket No. 98–AGL–20, published on June 5, 1998 (63 FR 30594) rule modified Class E Airspace at Marion, OH. One error was discovered in the legal description for the Class E airspace for Marion, OH. This action corrects that error. Correction to Final Rule.

Accordingly, pursuant to the authority delegated to me, the legal description for the Class E airspace Marion, OH, as published in the **Federal Register** June 5, 1998 (63 FR 30594), (FR Doc. 98–15039), is corrected as follows:

PART 71—[CORRECTED]

§ 71.1 [Corrected]

AGL OH E5 Marion, OH [Corrected]

On page 30594, Column 3, first line from the top of the column, in the Class E airspace designation for Marion, OH, incorporated by reference in § 71.1, correct the word ''Buckyrus'' to read ''Bucyrus''.

Issued in Des Plaines, IL on June 10, 1998.

David B. Johnson,

Acting Manager, Air Traffic Division, Great Lakes Region.

[FR Doc. 98–16637 Filed 6–16–98; 8:45 am]

BILLING CODE 4910–13–M

FEDERAL TRADE COMMISSION

16 CFR Part 5

Exemption of Insubstantial Financial Conflicts.

AGENCY: Federal Trade Commission (FTC).

ACTION: Final rule.

SUMMARY: The Commission is amending a Commission Rule to make it consistent with the Office of Government Ethics' regulation establishing regulatory waivers of certain financial conflicts of interest.

EFFECTIVE DATE: This amendment is effective on June 29, 1998.

FOR FURTHER INFORMATION CONTACT: Ira S. Kaye, Attorney, Federal Trade Commission, Room 594, 6th Street and Pennsylvania Ave., NW., Washington DC 20580. 202–326–2426.

SUPPLEMENTARY INFORMATION: When the Standards of Ethical Conduct for Employees of the Executive Branch (''Standards''), 5 CFR Part 2635, became effective on February 3, 1993, they superseded most of the Commission's own standards of conduct, 16 CFR Part 5. The Commission rescinded its superseded standards on February 8, 1993. *See* 58 FR 15763 (March 24, 1993). The Commission retained Rule 5.8 because it had not been superseded by the new Standards, but renumbered it as Rule 5.2.

Rule 5.2(a)–(c) provides the requirements and procedures for seeking a waiver of a financial conflict of interest. In addition, Rule 5.2(d) notes that a financial interest in ''[s]tocks and bonds of a diversified mutual fund or investment company'' is waived automatically, pursuant to 18 U.S.C. 208(a), provided that the employee does not own more than one percent of the value of the fund's reported assets.

The U.S. Office of Government Ethics issued a final rule, 5 CFR Part 2640, effective on January 17, 1997, describing a number of additional circumstances under which a financial conflict of interest is waived automatically. For example, an employee may participate in a particular matter, despite holding a financial interest that would be affected by the matter, if the interest arises from the ownership of publicly traded securities and is valued at no more than $5000. 5 CFR 2640.202(a). Thus, the reference to an automatic waiver in Commission Rule 5.2(d) should be amended to reflect the existence of these additional regulatory waivers.

This rule amendment relates solely to agency practice, and, thus, is not subject to the notice and comment requirements of the Administrative Procedure Act, 5 U.S.C. 553(a)(2), or to the requirements of the Regulatory Flexibility Act, 5 U.S.C. 601(2).

The amended rule does not involve the ''collection of information'' as that term is defined by the Paperwork Reduction Act (''PRA''), 44 U.S.C. 3501–3520.

List of Subjects in 16 CFR Part 5

Standards of conduct.

For the reasons set forth in the preamble, the Federal Trade Commission amends Title 16, Chapter I, subchapter A, of the Code of Federal Regulations as follows:

PART 5—STANDARDS OF CONDUCT

1. The authorities citation for Part 5 continues to read as follows:

Authority: 5 U.S.C. 7301; 5 U.S.C. App. (Ethics in Government Act of 1978); 15 U.S.C. 46(g); E.O. 12674, 54 FR 15159, 3 CFR, 1989 Comp. p. 215, as modified by E.O. 12731, 55 FR 42547, 3 CFR, 1990 Comp., p. 306, 5 CFR part 2635, unless otherwise noted.

2. Section 5.2 is amended by revising paragraph (d) to read as follows:

§ 5.2 Exemption of insubstantial financial conflicts.

* * * * *

(d) Pursuant to 5 CFR Part 2640, certain financial interests are exempted from the provisions of 18 U.S.C. 208(a) as being too remote to too inconsequential to affect the integrity of an employee's services.

By direction of the Commission.

Benjamin I. Berman,

Acting Secretary.

[FR Doc. 98–17232 Filed 6–26–98; 8:45 am]

BILLING CODE 6750–01–M

SOCIAL SECURITY ADMINISTRATION

20 CFR Part 402

RIN 0960–AE68

Electronic Freedom of Information Act Amendments of 1996

AGENCY: Social Security Administration.

ACTION: Final rules.

SUMMARY: These rules reflect the changes made by the Electronic Freedom of Information Act Amendments (EFOIA) of 1996 that give the public access to government information and records maintained in an electronic format, provide for expedited processing of certain requests, establish ''electronic reading rooms,'' eliminate an agency backlog of work as a justification for delay in processing requests, require redacted material to be estimated or indicated in an agency's response, and require an agency reference guide on FOIA to be made available.

EFFECTIVE DATE: These rules are effective July 29, 1998.

FOR FURTHER INFORMATION CONTACT: Ron Martorana, Social Insurance Specialist, 3–A–6 Operations Building, 6401 Security Boulevard, Baltimore, MD 21235, (410) 965–1745 for information about these rules. For information on eligibility on claiming benefits, call our national toll-free number, 1–800–772–1213.

SUPPLEMENTARY INFORMATION: These rules revise our existing regulations to reflect the provisions of Pub. L. 104–231, the Electronic Freedom of Information Act Amendments of 1996. Pub. L. No. 104–231 amended 5 U.S.C. 552, popularly known as the Freedom of Information Act (FOIA), to provide public access to information in an electronic format, provide for expedited processing of certain requests, establish

''electronic reading rooms,'' eliminate an agency backlog of work as a justification for delay in processing requests, require redacted material to be estimated or indicated in an agency's response, and require an agency reference guide on FOIA to be made available. The rules also make technical changes to related rules.

According to the new law, the term ''record'' encompasses information, subject to the requirements of the FOIA, when maintained in any format, including an electronic format. The category of ''reading room'' records, at 5 U.S.C. 552(a)(2), is expanded to include records that the agency discloses in response to a FOIA request that have become, or are likely to become, the subject of future requests. An index of those records that are subject to multiple requests must be prepared and made available by computer telecommunications by December 31, 1999. Furthermore, agencies must create an ''electronic reading room'' to contain records created after November 1, 1996 that are required to be made available under 5 U.S.C. 552(a)(2). Additionally, agencies must make reasonable efforts to search for records, even when information is maintained in an electronic database, unless such efforts would significantly interfere with the operation of the agency's automated information system. If a requester requests a record in a particular format, agencies must attempt to provide the record in that format if the record is readily reproducible in such format.

The general period for responding to requests has been changed from 10 days to 20 days. Moreover, multi-track processing may be offered as a way to provide more timely responses. Agencies and requesters may discuss alternative time frames to process requests, or modifications to the requests, when the general 20-day time for responding cannot be met. Expedited processing of requests must be done when there is a compelling need for the records. ''Compelling need'' means that the failure to obtain the records on an expedited basis could reasonably be expected to pose an imminent threat to the life or physical safety of an individual, or when a request is made by a person primarily engaged in disseminating information (e.g., the news media), and there is an urgency to inform the public concerning actual or alleged Federal Government activity.

The amount of information deleted on a record must be indicated, unless doing so would harm an interest protected by an exemption; and, if technically feasible, the indication shall be at the place in the record where the deletion is made. If whole pages or documents are withheld, an estimate of the volume of material withheld must be provided to the requester, unless doing so would harm an interest protected by an exemption. Furthermore, a guide for requesting records, to include an index and description of major record systems, must be made available to the public.

The definition of ''record'' in § 402.30 is revised to reflect the provisions of section 3 of Pub. L. No. 104–231 to include information stored in an electronic format, and the meaning of ''record'' in the Records Disposal Act, 44 U.S.C. 3301, as well as the Supreme Court's decision in *U.S. Dept. of Justice* v. *Tax Analysts*, 492 U.S. 136 (1989).

Section 402.35 is revised to reflect the provisions of section 4 of Pub. L. No. 104–231 concerning availability of records, extent of deletions, and a general index of records.

Section 402.40 is revised to indicate that SSA Publications on CD–ROM are available for purchase.

Section 402.45 is revised to add a new category to reading room records. These are records which ''the agency determines have become or are likely to become the subject of subsequent requests for substantially the same records.'' Also, we have provided an electronic index for this category of records as reflected in section 4 of the EFOIA amendments.

Section 402.100(b) is revised to reflect the decision in *Dept. of Justice* v. *Reporters Committee for Freedom of the Press*, 489 U.S. 749 (1989) concerning whether personal information may be released. In that case, the Court stated that the only public interest to be considered is whether disclosure would shed light on how an agency performs its statutory duties, and that the identity of the requester or purpose for which the information is requested is not relevant.

Section 402.110, entitled ''Exemption seven for withholding records: Law enforcement'', in 20 CFR 400–499 as revised as of April 1, 1997 is incorrectly designated. It should be designated as § 402.105.

Section 402.115, which explains the deletion of personally identifying details in requested records, and § 402.120, which explains the creation of records, has been moved for ease of reference to § 402.145, which explains what we are required to do when responding to a request for information.

Section 402.130 is revised by adding language about the electronic availability of a guide/handbook on how to request information from the Social Security Administration (SSA). We also describe how the public can request FOIA records.

Section 402.140 is revised to include multi-track processing, requests for expedited processing and the changes in time limits as provided in sections 7 and 8 of the EFOIA amendments. The EFOIA amendments extended the general period of 10 days for determining whether to comply with a request to 20 days.

The EFOIA amendments encourage agencies which experience difficulties in meeting FOIA's time limits to experiment with multi-track processing. Before the enactment of the EFOIA amendments, due to increased volumes of FOIA requests and staff losses, we experimented with various processes to reduce backlogs, among them multi-tracking. The results are encouraging and we plan to institute multi-tracking procedures. We have established four tracks depending on the ease of providing an answer:

(1) Track 1—Requests that can be answered with readily available records or information. These are the fastest to process.

(2) Track 2—Requests where we need records or information from other offices throughout the Agency, but we do not expect that the decision on disclosure will be as time consuming as for requests in Track 3.

(3) Track 3—Requests which require a substantive decision or input from another office or agency and a considerable amount of time will be needed for that, or the request is complicated or involves a large number of records. Usually, these cases will take the longest to process.

(4) Track 4—Requests that will be expedited.

The EFOIA requires agencies to promulgate regulations providing expedited access for requesters who show a ''compelling need'' for a speedy response. The EFOIA describes compelling need as when there is ''an imminent threat to the life or physical safety of an individual,'' or when it is a request from a member of the media, and there is an ''urgency to inform the public concerning actual or alleged Federal Government activity.''

Section 402.145 is revised to include new provisions on searching for, retrieving, and furnishing records in electronic formats, and describes how deletions on records will be indicated.

Section 402.150 is revised to cross-refer to § 402.45 to describe the indexing of records for the new category of reading room records. This describes our procedures for releasing records for which we receive multiple requests or expect to receive multiple requests.

Section 402.160 is revised to correct the reference to § 402.145(b) and (c) and to clarify these paragraphs. These

references should read § 402.155(b) and (c).

Comments on Notice of Proposed Rulemaking

These regulations were published in the **Federal Register** (62 FR 43489) as a notice of proposed rulemaking on August 14, 1997. Interested parties were given 30 days to submit comments. No public comments were received. We are, therefore, publishing these final rules with no substantive changes from the proposed rules.

Regulatory Procedures

Executive Order No. 12866

We have consulted with the Office of Management and Budget (OMB) and determined that these rules do not meet the criteria for a significant regulatory action under Executive Order 12866. Thus, they were not subject to mandatory OMB review.

Regulatory Flexibility Act

We certify that these rules do not have a significant economic impact on a substantial number of small entities since these rules affect only individuals. Therefore, a regulatory flexibility analysis as provided in the Regulatory Flexibility Act, as amended, is not required.

Paperwork Reduction Act

These regulations impose no additional reporting and recordkeeping requirements subject to OMB clearance.

(Catalog of Federal Domestic Assistance Program Nos. 96.001 Social Security-Disability Insurance; 96.002 Social Security-Retirement Insurance; 96.004 Social Security-Survivors Insurance; 96.006 Supplemental Security Income)

List of Subjects in 20 CFR 402

Administrative practice and procedure, Freedom of information, Reporting and recordkeeping.

Dated: June 18, 1998.

Kenneth S. Apfel,

Commissioner of Social Security.

For the reasons set out in the preamble, we are amending part 402 of 20 CFR chapter III as follows:

PART 402—AVAILABILITY OF INFORMATION AND RECORDS TO THE PUBLIC

1. The authority citation for 20 CFR part 402 continues to read as follows:

Authority: Secs. 205, 702(a)(5), and 1106 of the Social Security Act; (42 U.S.C. 405, 902(a)(5), and 1306); Section 413(b) of the Federal Mine Safety and Health Act of 1977 (30 U.S.C. 923b), 5 U.S.C. 552 and 552a; 8 U.S.C. 1360; 18 U.S.C. 1905; 26 U.S.C. 6103; 31 U.S.C. 9701; E.O. 12600, 52 FR 23781, 3 CFR, 1987 Comp., p. 235.

2. Section 402.30 is amended by revising the definition of ''records'' to read as follows:

§ 402.30 Definitions.

* * * * *

Records means any information maintained by an agency, regardless of forms or characteristics, that is made or received in connection with official business. This includes handwritten, typed, or printed documents (such as memoranda, books, brochures, studies, writings, drafts, letters, transcripts, and minutes) and material in other forms, such as punchcards; magnetic tapes; cards; computer discs or other electronic formats; paper tapes; audio or video recordings; maps; photographs; slides; microfilm; and motion pictures. It does not include objects or articles such as exhibits, models, equipment, and duplication machines, audiovisual processing materials, or computer software. It does not include personal records of an employee, or books, magazines, pamphlets, or other reference material in formally organized and officially designated SSA libraries, where such materials are available under the rules of the particular library.

* * * * *

3. Section 402.35 is amended by adding new paragraph (d) to read as follows:

§ 402.35 Publication.

* * * * *

(d) *Availability by Telecommunications.* To the extent practicable, we will make available by means of computer telecommunications the indices and other records that are available for inspection.

4. Section 402.40 is amended by adding new paragraph (h) to read as follows:

§ 402.40 Publications for sale.

* * * * *

(h) SSA Publications on CD–ROM.

5. Section 402.45 is amended by adding new paragraph (d) to read as follows:

§ 402.45 Availability of records.

* * * * *

(d) *Electronic Reading Room.* We will prepare an index of records which have become or are likely to become the subject of subsequent requests. The index, and, to the extent practicable, the records will be made available on the Internet or by other computer telecommunications means.

6. Section 402.100 is amended by revising the heading and paragraph (b) to read as follows:

§ 402.100 Exemption six: Clearly unwarranted invasion of personal privacy.

* * * * *

(b) *Balancing test.* In deciding whether to release records to you that contain personal or private information about someone else, we weigh the foreseeable harm of invading a person's privacy against the public interest in disclosure. In determining whether disclosure would be in the public interest, we will consider whether disclosure of the requested information would shed light on how a Government agency performs its statutory duties. However, in our evaluation of requests for records we attempt to guard against the release of information that might involve a violation of personal privacy because of a requester being able to ''read between the lines'' or piece together items that would constitute information that normally would be exempt from mandatory disclosure under Exemption Six.

* * * * *

7. The first § 402.110 entitled ''Exemption seven for withholding records: Law enforcement'' is amended by correctly designating the section number to read § 402.105.

§ 402.115 [Removed]

8. Section 402.115 is removed.

§ 402.120 [Removed]

9. Section 402.120 is removed.

10. Section 402.130 is revised to read as follows:

§ 402.130 How to request a record.

You may request a record in person or by mail or by electronic telecommunications. To the extent practicable, and in the future, we will attempt to provide access for requests by telephone, fax, Internet, and e-mail. Any request should reasonably describe the record you want. If you have detailed information which would assist us in identifying that record, please submit it with your request. We may charge fees for some requests (§§ 402.145–402.175 explain our fees). You should identify the request as a Freedom of Information Act request and mark the outside of any envelope used to submit your request as a ''Freedom of Information Request.'' The staff at any Social Security office can help you prepare this request.

11. Section 402.140 is revised to read as follows:

§ 402.140 How a request for a record is processed.

(a) In general, we will make a determination as to whether a requested record will be provided within 20 days (excepting Saturdays, Sundays, and legal public holidays) after receipt of a request by the appropriate official (see § 402.135). This 20-day period may be extended in unusual circumstances by written notice to you, explaining why we need additional time, and the extension may be for up to 10 additional working days when one or more of the following situations exist:

(1) The office processing the request needs to locate and then obtain the record from another facility;

(2) We need to locate, obtain, and appropriately examine a large number of records which are requested in a single request; or

(3) The office processing the request needs to consult with another agency which has a substantial interest in the subject matter of the request. This consultation shall be conducted with all practicable speed.

(b) If we cannot process your request within 10 additional days, we will notify you and provide you an opportunity to limit the scope of the request so that it may be processed within the additional 10 days, or we will provide you with an opportunity to arrange with us an alternative time frame for processing the request, or for processing a modified request.

(c) *Multi-tracking procedures.* We will establish four tracks for handling requests and the track to which a request is assigned will depend on the nature of the request and the estimated processing time:

(1) Track 1—Requests that can be answered with readily available records or information. These are the fastest to process.

(2) Track 2—Requests where we need records or information from other offices throughout the Agency but we do not expect that the decision on disclosure will be as time consuming as for requests in Track 3.

(3) Track 3—Requests which require a decision or input from another office or agency and a considerable amount of time will be needed for that, or the request is complicated or involves a large number of records. Usually, these cases will take the longest to process.

(4) Track 4—Requests that will be expedited.

(d) We will provide for expedited access for requesters who show a ''compelling need'' for a speedy response. The EFOIA describes compelling need as when the failure to obtain the records on an expedited basis could reasonably be expected to pose ''an imminent threat to the life or physical safety of an individual,'' or when the request is from a person primarily engaged in disseminating information (such as a member of the news media), and there is an ''urgency to inform the public concerning actual or alleged Federal Government activity.'' We also will expedite processing of a request if the requester explains in detail to our satisfaction that a prompt response is needed because the requester may be denied a legal right, benefit, or remedy without the requested information, and that it cannot be obtained elsewhere in a reasonable amount of time. We will respond within 10 days to a request for expedited processing and, if we decide to grant expedited processing, we will then notify you of our decision whether or not to disclose the records requested as soon as practicable.

12. Section 402.145 is revised to read as follows:

§ 402.145 Responding to your request.

(a) *Retrieving records.* We are required to furnish copies of records only when they are in our possession or we can retrieve them from storage. We will make reasonable efforts to search for records manually or by automated means, including any information stored in an electronic form or format, except when such efforts would significantly interfere with the operation of our automated information system. If we have stored the records you want in the National Archives or another storage center, we will retrieve and review them for possible disclosure. However, the Federal Government destroys many old records, so sometimes it is impossible to fill requests. Various laws, regulations, and manuals give the time periods for keeping records before they may be destroyed. For example, there is information about retention of records in the Records Disposal Act of 1944, 44 U.S.C. 3301 through 3314; the Federal Property Management Regulations, 41 CFR 101–11.4; and the General Records Schedules of the National Archives and Records Administration.

(b) *Furnishing records.* We will furnish copies only of records that we have or can retrieve. We are not required to create new records or to perform research for you. We may decide to conserve Government resources and at the same time supply the records you need by consolidating information from various records rather than copying them all. For instance, we could extract sections from various similar records instead of providing repetitious information. We generally will furnish only one copy of a record. We will make reasonable efforts to provide the records in the form or format you request if the record is readily reproducible in that form or format.

(c) *Deletions.* When we publish or otherwise make available any record, we may delete information that is exempt from disclosure. For example, in an opinion or order, statement of policy, or other record which relates to a private party or parties, the name or names and other identifying details may be deleted. When technically feasible, we will indicate the extent of deletions on the portion of the record that is released or published at the place of the deletion unless including that indication would harm an interest protected by an exemption. If we deny a request, in whole or in part, we will make a reasonable effort to estimate the volume of any requested matter that is not disclosed, unless such an estimate would harm an interest protected by an exemption.

(d) *Creation of records.* We are not required to create new records merely to satisfy a request. However, we will search manually or by automated means to locate information that is responsive to the request. If extensive computer programming is needed to respond to a request, we may decline to commit such resources, or if we agree to do so, we may charge you for the reasonable cost of doing so. We do not mean that we will never help you get information that does not already exist in our records. However, diverting staff and equipment from our other responsibilities may not always be possible.

13. Section 402.150 is amended by revising paragraph (a), removing paragraph (b), and redesignating paragraph (c) as new paragraph (b) to read as follows:

§ 402.150 Release of records.

(a) *Records previously released.* If we have released a record, or a part of a record, to others in the past, we will ordinarily release it to you also. However, we will not release it to you if a statute forbids this disclosure, and we will not necessarily release it to you if an exemption applies in your situation and it did not apply, or applied differently, in the previous situation(s) or if the previous release was unauthorized. See § 402.45(d) regarding records in electronic reading rooms.

* * * * *

14. Section 402.160 is amended by revising paragraphs (b) and (c) to read as follows:

§ 402.160 Fees to be charged—general provisions.

* * * * *

(b) If we are not charging you for the first two hours of search time, under paragraph (c) of § 402.155, and those two hours are spent on a computer search, then the two free hours are the first two hours of the time needed to access the information in the computer.

(c) If we are not charging you for the first 100 pages of duplication, under paragraph (b) or (c) of § 402.155, then those 100 pages are the first 100 pages of photocopies of standard size pages, or the first 100 pages of computer printout.

* * * * *

[FR Doc. 98–17104 Filed 6–26–98; 8:45 am]

BILLING CODE 4190–29–P

DEPARTMENT OF HEALTH AND HUMAN SERVICES

Food and Drug Administration

21 CFR Part 54

[Docket No. 93N–0445]

Financial Disclosure by Clinical Investigators; Correction

AGENCY: Food and Drug Administration, HHS.

ACTION: Final rule; correction.

SUMMARY: The Food and Drug Administration (FDA) is correcting a final rule that appeared in the **Federal Register** of February 2, 1998 (63 FR 5233). The document issued regulations requiring the sponsor of any drug, including a biological product, or device marketing application (applicant), to submit certain information covering the compensation to, and financial interests of, any clinical investigator conducting certain clinical studies. The document was published with an error. This document corrects that error.

EFFECTIVE DATE: February 2, 1999.

FOR FURTHER INFORMATION CONTACT: Mary C. Gross, Office of External Affairs, Food and Drug Administration (HF–60), 5600 Fishers Lane, Rockville, MD 20857, 301–827–3440, FAX 301–594–0113.

SUPPLEMENTARY INFORMATION: In FR Doc. 98–2407 appearing on page 5233 in the **Federal Register** of February 2, 1998, the following correction is made:

§ 54.4 [Corrected]

On page 5251, in the first column, in § 54.4 *Certification and disclosure requirements*, paragraph (a), line 3, ''519(k)'' is corrected to read ''510(k)''.

Dated: June 19, 1998.

William K. Hubbard,

Associate Commissioner for Policy Coordination.

[FR Doc. 98–17145 Filed 6–26–98; 8:45 am]

BILLING CODE 4160–01–F

DEPARTMENT OF HEALTH AND HUMAN SERVICES

Food and Drug Administration

21 CFR Part 178

[Docket No. 97F–0440]

Indirect Food Additives: Adjuvants, Production Aids, and Sanitizers

AGENCY: Food and Drug Administration, HHS.

ACTION: Final rule.

SUMMARY: The Food and Drug Administration (FDA) is amending the food additive regulations to provide for the safe use of 1,6-hexanediamine, *N, N′*-bis(2,2,6,6-tetramethyl-4-piperidinyl)-, polymers with morpholine-2,4,6-trichloro-1,3,5-triazine reaction products, methylated, as a stabilizer for olefin polymers intended for use in contact with food. This action is in response to a petition filed by Cytec Industries, Inc.

DATES: The regulation is effective June 29, 1998; written objections and requests for a hearing by July 29, 1998.

ADDRESSES: Submit written objections to the Dockets Management Branch (HFA–305), Food and Drug Administration, 12420 Parklawn Dr., rm. 1–23, Rockville, MD 20857.

FOR FURTHER INFORMATION CONTACT: Vir D. Anand, Center for Food Safety and Applied Nutrition (HFS–215), Food and Drug Administration, 200 C St. SW., Washington, DC 20204, 202–418–3081.

SUPPLEMENTARY INFORMATION: In a notice published in the **Federal Register** of November 6, 1997 (62 FR 60095), FDA announced that a food additive petition (FAP 8B4562) had been filed by Cytec Industries, Inc., c/o Keller and Heckman, 1001 G St. NW., suite 500 West, Washington, DC 20001. The petition proposed to amend the food additive regulations in § 178.2010 *Antioxidants and/or stabilizers for polymers* (21 CFR 178.2010) to provide for the safe use of 1,6-hexanediamine, *N, N′*-bis(2,2,6,6-tetramethyl-4-piperidinyl)-, polymers with morpholine-2,4,6-trichloro-1,3,5-triazine reaction products, methylated, as a stabilizer for olefin polymers complying with 21 CFR 177.1520 intended for use in contact with food.

FDA has evaluated data in the petition and other relevant material. Based on this information, the agency concludes that the proposed use of the additive is safe and the additive will achieve its intended technical effect. Therefore, the regulations in § 178.2010 should be amended as set forth below.

FDA's review of this petition indicates that the additive may contain trace amounts of formaldehyde as an impurity. The potential carcinogenicity of formaldehyde was reviewed by the Cancer Assessment Committee (the Committee) of FDA's Center for Food Safety and Applied Nutrition. The Committee noted that for many years, formaldehyde has been known to be a carcinogen by the inhalation route, but the Committee concluded that these inhalation studies are not appropriate for assessing the potential carcinogenicity of formaldehyde in food. The Committee's conclusion was based on the fact that the route of administration (inhalation) is not relevant to the safety of formaldehyde residues in food and the fact that tumors were observed only locally at the portal of entry (nasal turbinates). In addition, the agency has received literature reports of two drinking water studies on formaldehyde: (1) A preliminary report of a carcinogenicity study purported to be positive by Soffritti et al. (1989), conducted in Bologna, Italy (Ref. 1); and (2) a negative study by Til et al. (1989), conducted in The Netherlands (Ref. 2). The Committee reviewed both studies and concluded, concerning the Soffritti study, '' * * * that data reported were unreliable and could not be used in the assessment of the oral carcinogenicity of formaldehyde'' (Ref. 3). This conclusion is based on a lack of critical detail in the study, questionable histopathological conclusions, and the use of unusual nomenclature to describe the tumors. Based on the Committee's evaluation, the agency has determined that there is no basis to conclude that formaldehyde is a carcinogen when ingested.

In accordance with § 171.1(h) (21 CFR 171.1(h)), the petition and the documents that FDA considered and relied upon in reaching its decision to approve the petition are available for inspection at the Center for Food Safety and Applied Nutrition by appointment with the information contact person listed above. As provided in § 171.1(h), the agency will delete from the documents any materials that are not available for public disclosure before making the documents available for inspection.

The agency has previously considered the environmental effects of this rule as announced in the notice of filing for

FAP 8B4562 (62 FR 60095, November 6, 1997). No new information or comments have been received that would affect the agency's previous determination that there is no significant impact on the human environment and that an environmental impact statement is not required.

Any person who will be adversely affected by this regulation may at any time on or before July 29, 1998, file with the Dockets Management Branch (address above) written objections thereto. Each objection shall be separately numbered, and each numbered objection shall specify with particularity the provisions of the regulation to which objection is made and the grounds for the objection. Each numbered objection on which a hearing is requested shall specifically so state. Failure to request a hearing for any particular objection shall constitute a waiver of the right to a hearing on that objection. Each numbered objection for which a hearing is requested shall include a detailed description and analysis of the specific factual information intended to be presented in support of the objection in the event that a hearing is held. Failure to include such a description and analysis for any particular objection shall constitute a waiver of the right to a hearing on the objection. Three copies of all documents shall be submitted and shall be identified with the docket number found in brackets in the heading of this document. Any objections received in response to the regulation may be seen in the Dockets Management Branch between 9 a.m. and 4 p.m., Monday through Friday.

This final rule contains no collections of information. Therefore, clearance by the Office of Management and Budget under the Paperwork Reduction Act of 1995 is not required.

References

The following references have been placed on display in the Dockets Management Branch (address above) and may be seen by interested persons between 9 a.m and 4 p.m., Monday through Friday.

1. Soffritti, M., C. Maltoni, F. Maffei, and R. Biaggi, ''Formaldehyde: An Experimental Multipotential Carcinogen,'' *Toxicology and Industrial Health*, vol. 5, No. 5: 699–730, 1989.

2. Til, H. P., R. A. Woutersen, V. J. Feron, V. H. M. Hollanders, H. E. Falke, and J. J. Clary, ''Two-Year Drinking Water Study of Formaldehyde in Rats,'' *Food Chemical Toxicology*, vol. 27, No. 2, pp. 77–87, 1989.

3. Memorandum of Conference concerning ''Formaldehyde;'' Meeting of the Cancer Assessment Committee, FDA, April 24, 1991, and March 4, 1993.

List of Subjects in 21 CFR Part 178

Food additives, Food packaging.

Therefore, under the Federal Food, Drug, and Cosmetic Act and under authority delegated to the Commissioner of Food and Drugs, 21 CFR part 178 is amended as follows:

PART 178—INDIRECT FOOD ADDITIVES: ADJUVANTS, PRODUCTION AIDS, AND SANITIZERS

1. The authority citation for 21 CFR part 178 continues to read as follows:

Authority: 21 U.S.C. 321, 342, 348, 379e.

2. Section 178.2010 is amended in the table in paragraph (b) by alphabetically adding a new entry under the headings ''Substances'' and ''Limitations'' to read as follows:

§ 178.2010 Antioxidants and/or stabilizers for polymers.

* * * * *

(b) * * *

Substances	Limitations
* * * *	* * *
1,6–Hexanediamine, *N, N'*-bis(2,2,6,6-tetramethyl-4-piperidinyl)-, polymers with morpholine-2,4,6-trichloro-1,3,5-triazine reaction products, methylated (CAS Reg. No. 193098–40–7).	For use only as a stabilizer at levels not to exceed 0.3 percent by weight of olefin polymers complying with § 177.1520(c) of this chapter. The finished polymers are to contact food only under conditions of use C, D, E, F, and G, as described in Table 2 of § 176.170(c) of this chapter. Provided that the finished food-contact articles have a volume of at least 18.9 liters (5 gallons).
* * * *	* * *

Dated: June 19, 1998.

William K. Hubbard,

Associate Commissioner for Policy Coordination.

[FR Doc. 98–17144 Filed 6–26–98; 8:45 am]

BILLING CODE 4160–01–P

DEPARTMENT OF HOUSING AND URBAN DEVELOPMENT

24 CFR Chapter V

[Docket No. FR–4254–N–03]

HUD Disaster Recovery Initiative

AGENCY: Office of Community Planning and Development, HUD.

ACTION: Notice of disaster recovery funds availability and waivers; clarification.

SUMMARY: The 1997 Emergency Supplemental Appropriations Act for Recovery from Natural Disasters required publication of a Notice governing use of such funds in conjunction with any program administered by the Federal Emergency Management Agency (FEMA) for buyouts of structures in disaster areas. HUD published a Notice on September 8, 1997 (62 FR 47344) that described the policies and procedures applicable to the HUD Disaster Recovery Initiative. This Notice clarifies the timing of the reports HUD expects to receive on the use of HUD Disaster Recovery Initiative grant funds. This Notice also clarifies the citizen participation certifications and notifies grantees of a statutory restriction on waivers related to funds used as the non-Federal cost-share for U.S. Army Corps of Engineers projects.

EFFECTIVE DATE: June 29, 1998.

FOR FURTHER INFORMATION CONTACT: Jan C. Opper, Senior Program Officer, Office of Block Grant Assistance, Department of Housing and Urban Development, Room 7286, 451 Seventh Street, SW, Washington, DC 20410; telephone number (202) 708–3587. Persons with hearing or speech impairments may access this number via TTY by calling the Federal Information Relay Service at (800) 877–8339. FAX inquiries may be sent to Mr. Opper at (202) 401–2044. (Except for the

''800'' number, these telephone numbers are not toll-free.)

SUPPLEMENTARY INFORMATION: On September 8, 1997 (62 FR 47344), HUD published a Notice describing the policies and procedures applicable to the HUD Disaster Recovery Initiative, in accordance with the requirements of the 1997 Emergency Supplemental Appropriations Act for Recovery from Natural Disasters, and for Overseas Peacekeeping Efforts, Including those in Bosnia (Pub. L. 105–18; approved June 12, 1997). HUD's Disaster Recovery Initiative helps communities that are affected by disasters and that receive Presidential declarations. When other agencies cannot assist, HUD steps in with funding for recovery activities—providing the glue that holds together the sometimes disconnected pieces of disaster recovery.

HUD is issuing this Notice to clarify the provisions of the September 8, 1997 Notice regarding the timing of the submission to HUD of necessary reports. The items included in this Notice replace the indicated portions in the September 8, 1997 Notice and add additional information. All other paragraphs of the September 8, 1997 Notice are unaffected. This Notice simplifies the requirement for an annual report and clarifies requirements for the statutorily required quarterly reports. HUD is retaining the annual financial reconciliation and benefit elements of the annual report, but is shifting them from a separate annual report into every fourth quarterly report. To the extent possible, HUD will automate the quarterly reports and the annual reconciliation and benefit calculation.

This Notice also clarifies the citizen participation requirements, eliminating an unintended source of confusion in the September 8, 1997 Notice, which required a grantee to certify it was following the citizen participation plan required at part 91, although it also stated slightly different requirements. This portion of the Notice may have resulted in a conflict or confusion for some grantees (especially those that included procedures in their citizen participation plan in case of a Federally declared disaster). This Notice changes the requirement from certifying to the part 91 citizen participation plan, to certifying to the plan required at section I.E.7.b. of the Notice.

This Notice also notifies grantees of a statutory restriction on waivers related to funds used as the non-Federal cost-share for U.S. Army Corps of Engineers projects.

Accordingly, FR Doc. 97–23752, the HUD Disaster Recovery Initiative Notice of disaster recovery funds availability and waivers, published in the **Federal Register** on September 8, 1997 (62 FR 47344), is amended as follows:

1. On page 47345, in column 3, in section I.E. entitled ''*Submission Requirements*'', paragraph 3.e. is revised to read as follows:

I. Empowering Communities for Recovery

* * * * *

E. Submission Requirements

* * * * *

3. The city or county grantee must describe monitoring standards and procedures pursuant to § 91.230 and include certifications pursuant to:

* * * * *

e. Section I.E.7.b. of this Notice (Citizen participation);

* * * * *

2. On page 47346, in column 1, in section I.E. entitled ''*Submission Requirements*'', paragraph 6.f. is revised to read as follows:

I. Empowering Communities for Recovery

* * * * *

E. Submission Requirements

* * * * *

6. The State grantee must describe monitoring standards and procedures pursuant to § 91.330 and include certifications pursuant to:

* * * * *

f. Section I.E.7.b. of this Notice (Citizen participation);

* * * * *

3. On page 47348, in column 3, in section I.H. entitled ''*Ineligible Activities*'', a new paragraph 3. is added at the end (after section I.H.2.c.), to read as follows:

I. Empowering Communities for Recovery

* * * * *

H. Ineligible Activities

* * * * *

3. The Departments of Veterans Affairs and Housing and Urban Development, and Independent Agencies Appropriations Act, 1998 (Pub. L. 105–65, approved October 27, 1997; 111 Stat. 1344, 1358) prohibits HUD from granting a waiver for the use of more than $100,000 in HUD Disaster Recovery funds for the non-Federal cost-share of a U.S. Army Corps of Engineers project, except for a levee project at Devils Lake, North Dakota. Thus, for funds in excess of $100,000, the proviso prohibits HUD from granting a waiver for relief from various program requirements, if the funds used for that activity will also be used to meet the non-federal cost-share for a Corps project. In contrast, the use of HUD Disaster Recovery funds for payment of the non-Federal cost-share required by a Federal grant-in-aid program has long been authorized by section 105(a)(9) of the Housing and Community Development Act of 1974, and therefore no waiver is required just to make matching eligible. This prohibition applies only to HUD Disaster Recovery funding in the foregoing appropriation law and such funding in prior appropriation laws.

* * * * *

4. On page 47351, in columns 2 and 3, section II.A. entitled ''*Program Administrative, Recordkeeping and Reporting Requirements*'' is revised to read as follows:

II. Ensuring the Public Trust

A. Program Administrative Recordkeeping and Reporting Requirements

The program administrative requirements at §§ 570.489–570.492 for States and at §§ 570.500–570.513 for cities and counties, which are not otherwise waived, shall apply, except that, with respect to reporting:

1. States must submit a Performance Evaluation Report (PER) pursuant to 24 CFR 91.520, separately for the HUD Disaster Recovery Initiative, similar in all other respects to that which is required for the CDBG program regulated at 24 CFR part 570. HUD will compile this PER for the HUD Disaster Recovery Initiative from the quarterly reports submitted under paragraph 3 below, except that, with the final quarterly report submitted prior to grant closeout, States must also include with the PER a special narrative that discusses how the States assured that activities met the requirements of this Notice with respect to the buyout of structures in a disaster area.

2. Cities and counties must submit a Performance Report for the HUD Disaster Recovery Initiative in accordance with 24 CFR 91.520. This Performance Report will be compiled by HUD from the quarterly reports submitted under paragraph 3 below. The final quarterly report submitted prior to grant closeout also must include a special narrative that discusses how the city or county assured that activities met the requirements of this Notice with respect to the buyout of structures in a disaster area.

3. Congress has required that quarterly reports be submitted on all disbursements and use of funds for or associated with buyouts. HUD must also receive reporting information for program management purposes.

Therefore, each grantee must submit a quarterly report, as HUD prescribes, no later than 30 days following each calendar quarter, beginning after the first full calendar quarter after grant award and continuing until all funds have been expended and that expenditure reported. Each quarterly report will include information on the project name, activity, location, national objective, funds budgeted and expended, non-HUD Disaster Recovery Initiative Federal source and funds, numbers of properties and housing units, and numbers of low- and moderate-income households. Annually (i.e., with every fourth submission), the report shall include a financial reconciliation of funds budgeted and expended, and calculation of the overall percent of benefit to low- and moderate-income persons (unless waived). HUD is seeking approval from OMB for any new information collection requirements in accordance with the Paperwork Reduction Act of 1995 (44 U.S.C. 3501–3520).

* * * * *

Dated: June 19, 1998.

Saul Ramirez,

Assistant Secretary for Community Planning and Development.

[FR Doc. 98–17273 Filed 6–26–98; 8:45 am]

BILLING CODE 4210–29–M

DEPARTMENT OF LABOR

Occupational Safety and Health Administration, Labor

29 CFR Parts 1915 and 1926

RIN 1218–AB25

Occupational Exposure to Asbestos

AGENCY: Occupational Safety and Health Administration, Labor.

ACTION: Final rule.

SUMMARY: This document revises the Construction and Shipyard standards regulating occupational exposure to asbestos to conform the standards to the Court of Appeals decision in *Asbestos Information Association/North America* v. *Reich,* 117 F. 3d 891 (5th Cir. July 24, 1997). The Court vacated the construction and shipyard standards insofar as they regulate asbestos-containing roof cements, mastics and coatings. The court's decision did not affect the general industry asbestos standard, and that standard is not being changed.

DATES: Effective on July 24, 1997.

FOR FURTHER INFORMATION CONTACT: John Martonik, Acting Director, Directorate of Safety Standards Programs, Room N–3605, U.S. Department of Labor, 200 Constitution Avenue, N.W., Washington, D.C. 20210; Telephone (202) 219–8061.

SUPPLEMENTARY INFORMATION:

Background

On August 10, 1994, the Occupational Safety and Health Administration published final standards (59 FR 40964, 29 CFR 1910.1001, 1915.1001, and 1926.1101), regarding occupational asbestos exposure. On June 29, 1995, OSHA issued amendments (60 FR 33974, 29 CFR 1915.1001 and 1926.1101) to correct and clarify various provisions of the construction and shipyard employment standards.

The Asbestos Information Association/North American (AIA/NA) petitioned for review of the construction and maritime standards' requirements for work practices, training, and hazard communication for asphalt roof cements, coatings and mastics which contain asbestos. In *Asbestos Information Association/North America* v. *Reich,* 117 F. 3d 891 (5th Cir. July 24, 1997), the court vacated the standards insofar as they regulate these materials.

Need for Correction

OSHA is amending sections 1915.1001 and 1926.1101 to conform the regulations to the court's decision. OSHA is adding a statement to paragraph (a) in both standards to state that the standard does not apply to asbestos-containing asphalt roof cements, coatings and mastics. In paragraph (g)(12) in the maritime standard and in paragraph (g)(11) of the construction standard covering alternative work practices, OSHA is deleting references to roofing cements, mastics and coatings. Section 1910.1001 remains unchanged.

OSHA is required to make these corrections to conform the standard to the court's decision. Because OSHA has no discretion in the matter, notice and opportunity for public comment are not necessary.

List of Subjects

29 CFR Part 1915

Asbestos, Hazardous substances, Longshore and harbor workers, Occupational safety and health, Vessels.

29 CFR Part 1926

Asbestos, Construction industry, Hazardous substances, Occupational safety and health.

Signed at Washington, D.C., this 22nd day of June, 1998.

Charles N. Jeffress,

Assistant Secretary of Labor for Occupational Safety and Health.

Accordingly, 29 CFR Parts 1915 and 1926 are corrected by making the following correcting amendments:

PART 1915—OCCUPATIONAL SAFETY AND HEALTH STANDARDS FOR SHIPYARD EMPLOYMENT

1. The authority citation for 29 CFR part 1915 is revised to read as follows:

Authority: Sec. 41, Longshore and Harbor Workers' Compensation Act (33 U.S.C. 941); secs. 4, 6, 8, Occupational Safety and Health Act of 1970 (29 U.S.C. 653, 655, 657); Secretary of Labor's Order No. 12–71 (36 FR 8754), 8–76 (41 FR 25059), 9–83 (48 FR 35736), 1–90 (55 FR 9033), or 6–96 (62 FR 111), as applicable; 29 CFR part 1911.

Section 1915.100 also issued under Section 29, Hazardous Materials Transportation Uniform Safety Act of 1990 (49 U.S.C. 1801–1819) and 5 U.S.C. 553.

Subpart Z—Toxic and Hazardous Substances

2. In § 1915.1001, add paragraph (a)(8) and revise paragraph (g)(12) introductory text to read as follows:

§ 1915.1001 Asbestos.

(a) *Scope and application.* * * *

* * * * *

(8) This section does not apply to asbestos-containing asphalt roof cements, coatings and mastics.

* * * * *

(g) *Methods of compliance* * * *

* * * * *

(12) *Alternative methods of compliance for installation, removal, repair, and maintenance of certain roofing and pipeline coating materials.* Notwithstanding any other provision of this section, an employer who complies with all provisions of this paragraph (g)(12) when installing, removing, repairing, or maintaining intact pipeline asphaltic wrap, or roof flashings which contain asbestos fibers encapsulated or coated by bituminous or resinous compounds shall be deemed to be in compliance with this section. If an employer does not comply with all provisions of this paragraph (g)(12) or if during the course of the job the material does not remain intact, the provisions of paragraph (g)(8) of this section apply instead of this paragraph (g)(12).

* * * * *

PART 1926—SAFETY AND HEALTH REGULATIONS FOR CONSTRUCTION

Subpart Z—Toxic and Hazardous Substances

3. The authority citation for Subpart Z of 29 CFR 1926 is revised to read as follows:

Authority: Sec. 107, Contract Work Hours and Safety Standards Act (40 U.S.C. 333); Secs. 4, 6, 8, Occupational Safety and Health Act of 1970 (29 U.S.C. 653, 655, 657); Secretary of Labor's Order Nos. 12–71 (36 FR 8754), 8–76 (41 FR 25059), 9–83 (48 FR 35736), 1–90 (55 FR 9033), or 6–96 (62 FR 111), as applicable; 29 CFR part 1911.

Section 1926.1102 not issued under 29 U.S.C. 655 or 29 CFR part 1911; also issued under 5 U.S.C. 553.

4. In § 1926.1101, add paragraph (a)(8) and revise paragraph (g)(11) introductory text to read as follows:

§ 1926.1101 Asbestos.

(a) *Scope and application.* * * *

* * * * *

(8) This section does not apply to asbestos-containing asphalt roof coatings, cements and mastics.

* * * * *

(g) *Methods of compliance* * * *

* * * * *

(11) *Alternative methods of compliance for installation, removal, repair, and maintenance of certain roofing and pipeline coating materials.* Notwithstanding any other provision of this section, an employer who complies with all provisions of this paragraph (g)(11) when installing, removing, repairing, or maintaining intact pipeline asphaltic wrap, or roof flashings which contain asbestos fibers encapsulated or coated by bituminous or resinous compounds shall be deemed to be in compliance with this section. If an employer does not comply with all provisions of this paragraph (g)(11) or if during the course of the job the material does not remain intact, the provisions of paragraph (g)(8) of this section apply instead of this paragraph (g)(11).

* * * * *

[FR Doc. 98–17091 Filed 6–26–98; 8:45 am]

BILLING CODE 4510–26–U

DEPARTMENT OF TRANSPORTATION

Coast Guard

33 CFR Parts 404, 405, 406, and 407

46 CFR Parts 401, 402, 403, and 404

[USCG–1998–3976]

Great Lakes Pilotage; Reorganization of Regulations

AGENCY: Coast Guard, DOT.

ACTION: Final rule.

SUMMARY: The Saint Lawrence Seaway Development Corporation's (SLSDC) responsibility for administering the Secretary's functions under the Great Lakes Pilotage Act, as amended, (GLPA) was transferred from the SLSDC to the U.S. Coast Guard on March 5, 1998. This rule relocates the Great Lakes Pilotage regulations from their current place in Title 33, Code of Federal Regulations, to their original place in Title 46, Code of Federal Regulations. Relocation of these regulations is necessary to position Great Lakes Pilotage rules with other U.S. Coast Guard regulations, and not with other SLSDC regulations. This rule also makes conforming amendments to the regulations to reflect U.S. Coast Guard responsibilities under the GPLA.

DATES: This final rule is effective June 30, 1998.

ADDRESSES: Documents as indicated in this preamble are available for inspection or copying at the Docket Management Facility, (USCG–1998–3976), U.S. Department of Transportation, room PL–401, 400 Seventh Street SW., Washington DC 20590–00001.

FOR FURTHER INFORMATION CONTACT: For questions on this rule, contact LTJG Mark A. Cunningham, U.S. Coast Guard, telephone 202–267–1534. For questions on viewing material in the docket, contact Dorothy Walker, Chief, Documents, Department of Transportation, telephone 202–366–9329.

SUPPLEMENTARY INFORMATION:

Regulatory History

This rulemaking relates to departmental management, organization, procedure, and practice. Under 5 U.S.C. 553(b)A, notice and public comment are unnecessary with respect to rules of this nature. Therefore, a notice of proposed rulemaking was not published prior to this rulemaking. For the same reason, good cause exists for making this rule effective less than 30 days after its publication date as is ordinarily required by 5 U.S.C. 553(d).

Background and Purpose

In 1994, the Secretary of Transportation (the Secretary) formed a study group to determine where to best locate the authority to execute the functions vested in him by the GPLA. Among other powers and duties, the GPLA authorizes the Secretary to examine pilots, register them, and set rates for their services. Because the study group recommended transferring these functions from the U.S. Coast Guard to the SLSDC, the Secretary withdrew the Coast Guard's authority in these matters and redelegated it to the SLSDC (December 11, 1995; 60 FR 63444). On November 12, 1997, the U.S. Court of Appeals for the District of Columbia Circuit, in *Halverson* v. *Slater*, 129 F.3d 180 (D.C. Cir, 1997), reversed a district court decision and held that the Secretary lacks the authority, under 49 U.S.C. 322(b), to delegate Great Lakes Pilotage Act powers and duties to the SLSDC. The court vacated the December 11, 1995 rule and determined that, under 46 U.S.C. 2104(a), the Secretary may delegate these functions only to the U.S Coast Guard. On March 5, 1998, the Secretary responded to the court's ruling by redelegating the authority to carry out functions under the GLPA to the U.S. Coast Guard (63 FR 10781–2).

This rulemaking relocates the Great Lakes Pilotage regulations from their current place in Title 33 to their original place in Title 46. Reorganization of the CFR is necessary to position Great Lakes Pilotage rules with other U.S. Coast Guard regulations, and not with other SLSDC regulations. This rule redesignates parts 404, 405, 406, and 407 of 33 CFR Chapter IV, as parts 401, 402, 403, and 404, respectively, of 46 CFR Chapter III.

This rule also makes conforming editorial changes to the redesignated sections that reflect the redelegation of Seaway responsibilities to the U.S. Coast Guard. For example, the word ''Administrator'' is changed to the word ''Commandant'' and the words ''Saint Lawrence Seaway Development Corporation'' are changed to the words ''U.S. Coast Guard.

This rule also revises the authority citations of each redesignated part to reflect the renewed delegation of responsibilities from the Secretary to the U.S. Coast Guard.

Small Entities

Under the Regulatory Flexibility Act (5 U.S.C. 601 *et seq.*), the Coast Guard considered whether this rule will have a significant economic impact on a substantial number of small entities.

''Small entities'' include small businesses, not-for-profit organizations that are independently owned and operated and are not dominant in their fields, and governmental jurisdictions with populations of less than 50,000. This rulemaking is an intra-departmental administrative that does nothing more than relocate certain sections of the U.S. Code of Federal Regulations. Therefore, the Coast Guard certifies under section 605(b) of the Regulatory Flexibility Act (5 U.S.C. 601 *et seq.*) that this final rule will not have a significant economic impact on a substantial number of small entities.

Collection of Information

This final rule does not provide for a collection of information under the Paperwork Reduction Act of 1995 (44 U.S.C. 3501 *et seq.).*

Federalism

The Coast Guard has analyzed this proposed rule under the principles and criteria contained in Executive Order 12612 and has determined that this proposed rule does not have sufficient implications for federalism to warrant the preparation of a Federalism Assessment.

Environment

The Coast Guard considered the environmental impact of this proposed rule and concluded that under figure 2–1, paragraph (34)(b), of Commandant Instruction M16475.1C, this proposed rule is categorically excluded from further environmental documentation. A ''Categorical Exclusion Determination'' is available in the docket for inspection or copying where indicated under **ADDRESSES**.

List of Subjects

33 CFR Part 404

Administrative practice and procedure, Coast Guard, Great Lakes, Navigation (water), Penalties, Reporting and recordkeeping requirements, Seamen, Waterways.

33 CFR Part 405

Administrative practice and procedure, Coast Guard, Great Lakes, Navigation (water), Penalties, Reporting and recordkeeping requirements, Seamen, Waterways.

33 CFR Part 406

Accounting, Administrative practice and procedure, Coast Guard, Great Lakes, Navigation (water), Penalties, Reporting and recordkeeping requirements, Seamen, Waterways.

46 CFR Part 407

Administrative practice and procedure, Coast Guard, Great Lakes, Navigation (water), Penalties, Reporting and recordkeeping requirements, Seamen, Waterways.

46 CFR Part 401

Administrative practice and procedure, Coast Guard, Great Lakes, Navigation (water), Penalties, Reporting and recordkeeping requirements, Seamen, Waterways.

46 CFR Part 402

Administrative practice and procedure, Coast Guard, Great Lakes, Navigation (water), Penalties, Reporting and recordkeeping requirements, Seamen, Waterways.

46 CFR Part 403

Accounting, Administrative practice and procedure, Coast Guard, Great Lakes, Navigation (water), Penalties, Reporting and recordkeeping requirements, Seamen, Waterways.

46 CFR Part 404

Administrative practice and procedure, Coast Guard, Great Lakes, Navigation (water), Penalties, Reporting and recordkeeping requirements, Seamen, Waterways.

For the reasons discussed in the preamble, and under the authority of 46 U.S.C. 2104(a) and 49 CFR 1.46 (mmm), the Coast Guard amends 33 CFR Chapter IV, and 46 CFR Chapter III as follows:

33 CFR CHAPTER IV

PARTS 404, 405, 406, AND 407 [REDESIGNATED AS 46 CFR CH. III (PARTS 401, 402, 403 AND 404)]

1. In 33 CFR Chapter IV, redesignate parts 404, 405, 406, and 407 as 46 CFR Chapter III, parts 401, 402, 403, and 404 respectively.

46 CFR CHAPTER III

2. Add a heading for 46 CFR Chapter III to read as follows:

CHAPTER III—COAST GUARD (GREAT LAKES PILOTAGE), DEPARTMENT OF TRANSPORTATION

PART 401—[AMENDED]

3. The authority citation for redesignated part 401, Title 46, Code of Federal Regulations is revised to read as follows:

Authority: 46 U.S.C. 2104(a), 6101, 7701, 8105, 9303, 9304; 49 CFR 1.45, 1.46 (mmm), 46 CFR 401.105 also issued under the authority of 44 U.S.C. 3507.

4. Revise the redesignated §§ 401.110 (a)(2) and (a)(9) to read as follows:

§ 401.110 Definitions.

* * * * *

(a) * * *

(2) *Commandant* means Commandant, U.S. Coast Guard, Washington, DC 20593–0001.

* * * * *

(9) *Director* means Director, Great Lakes Pilotage. Communications with the Director may be sent to the following address: Director, Great Lakes Pilotage (G–MO), 2100 Second Street, SW, Washington, DC 20593–0001.

* * * * *

§ 401.230 [Amended]

5. In the second sentence of § 401.230(b) remove the words ''Director or other official of the Saint Lawrence Seaway Development Corporation.'' and add, in its place, the word ''Director.''

6. Revise redesignated § 401.250(d) to read as follows:

§ 401.250 Suspension and revocation of certificates of registration.

* * * * *

(d) Every U.S. Registered Pilot shall, whenever his or her license is revoked or suspended under the provisions of Part 5 of this title, deliver his Certificate of Registration simultaneously with his or her license to the U.S. Coast Guard. If the license is suspended, the Certificate of Registration will be held with the suspended license and returned to the holder upon expiration of the suspension period.

§ 401.431 [Amended]

6. In redesignated § 401.431(e) remove the words ''Saint Lawrence Seaway Development Corporation'' and add, in its place, the word ''Administration.''

§ 401.510 [Amended]

7. In both sentences of redesignated § 401.510(b)(5) remove the words ''or the Director.''

PART 402—[AMENDED]

8. The authority citation for redesignated part 402, Title 46, Code of Federal Regulations is revised to read as follows:

Authority: 46 U.S.C. 2104(a), 8105, 9303, 9304; 49 CFR 1.46 (mmm).

PART 403—[AMENDED]

9. The authority citation for redesignated part 403, Title 46, Code of Federal Regulations is revised to read as follows:

Authority: 46 U.S.C. 2104(a), 8105, 9303, 9304; 49 CFR 1.46 (mmm).

PART 404—[AMENDED]

10. The authority citation for redesignated part 404, Title 46, Code of Federal Regulations is revised to read as follows:

Authority: 46 U.S.C. 2104(a), 8105, 9303, 9304; 49 CFR 1.46 (mmm).

11. In addition to the above amendments to Chapter III of Title 46, remove the word ''Director'' and add, in its place, the word ''Commandant'' in the following sections:

a. Section 401.210(a)(4);
b. Section 401.210(a)(7);
c. Section 401.220(b);
d. Section 401.240(d);
e. Section 401.320(d)(2);
f. Section 401.320(d)(3);
g. Section 401.510(b)(3), introductory text
h. Section 401.710(g); and
i. Section 401.100.

12. In addition to the above amendments to Chapter III of Title 46, remove the words ''Saint Lawrence Seaway Development Corporation'' and add, in their place, the words ''U.S. Coast Guard'' in the following sections:

a. Section 401.211(e);
b. Section 401.230(c);
c. Section 401.230(d);
d. Section 401.240(a);
e. Section 401.250(c);
f. Section 401.320(d)(4);
g. Section 401.425;
h. Section 401.510(b)(2);
i. Section 401.510(b)(3);
j. Section 401.600(a);
k. Section 401.615(b); and
l. Section 401.620(a).

13. In addition to the above amendments to Chapter III of Title 46, remove the word ''Administrator'' and add, in its place, the word ''Commandant'' in the following sections:

a. Section 401.615(b); and
b. Section 401.650.

14. In addition to the above amendments to Chapter III of Title 46, remove all references to ''404'' and add, in their place, ''401'' in the following sections:

a. 401.210(a)(8);
b. 401.210(b);
c. 401.211(a)(1), (b) and (3);
d. 401.230(e);
e. 401.240(b);
f. 401.320(b);
g. 401.330(a);
h. 401.335(a)(1);
i. 401.340(a) and (c);
j. 401.400(c);
k. 401.405 introductory text;
l. 401.410 introductory text;
m. 401.420(a);
n. 401.425;
o. 401.438;
p. 401.431(a), (f) and (g);
q. 401.451(a)(1);
r. 401.600(b);
s. 401.620(b);
t. 401.645;
u. 401.700(b);
v. 401.710(e);
w. 401.720(b);
x. 401.100;
y. 401.210(a);
z. 401.320(a) introductory text;
aa. 403.100;
bb. 403.400(c);
cc. 404.1(a);

15. In addition to the above amendments to Chapter III of Title 46, remove all references to ''405'' and add, in their place, ''402'' in the following sections:

a. 401.340(a);
b. 401.710.(d) and (e).

16. In addition to the above amendments to Chapter III of Title 46, remove all references to ''406'' and add, in their place, ''403'' in the following sections:

a. 401.320(d)(3);
b. Part 404, Appendix A. Step 1.A.

17. In addition to the above amendments to Chapter III of Title 46, remove all references to ''407'' and add, in their place, ''404'' in the following sections:

a. 403.120(b);
b. 404.1(b);
c. 404.10(a);
c. 404, Appendix A, Step 1.B;
d. 404, Appendix C, introductory text.

Dated: June 24, 1998.

J.P. High,

Acting Assistant Commandant for Marine Safety and Environmental Protection.

[FR Doc. 98–17269 Filed 6–26–98; 8:45 am]

BILLING CODE 4910–15–M

POSTAL RATE COMMISSION

39 CFR Part 3001

[Docket No. MC96–1; Order No. 1214]

Amendments to Domestic Mail Classification Schedule

AGENCY: Postal Rate Commission.

ACTION: Final rule.

SUMMARY: This final rule revises the Domestic Mail Classification Schedule (DMCS) by eliminating provisions related to a barcoded small parcel experiment. These provisions expired April 28, 1998. Given the status of the experiment and the Postal Service's intention not to request an extension or seek a permanent classification, elimination of these provisions will ensure that the DMCS accurately reflects current classifications and discounts.

DATES: This rule was effective April 28, 1998.

FOR FURTHER INFORMATION CONTACT: Stephen L. Sharfman, General Counsel, Postal Rate Commission, 1333 H Street NW, Suite 300, Washington, DC, 20268–0001, 202–789–6820.

SUPPLEMENTARY INFORMATION: One of the provisions recommended by the Commission and approved by the Governors in Docket No. MC96–1, Experimental First-Class and Priority Mail Small Parcel Automation Rate Category, specified that the experiment would be limited to a two-year period, ending April 28, 1998. Shortly before the expiration date, the Postal Service published a notice in the **Federal Register** stating its intention to allow the experiment to end on the scheduled expiration date without filing a request with the Commission to establish permanent classifications and discounts. The notice also briefly reviewed the basic objectives of the experiment and the reasons why the Service decided against pursuing a permanent classification. See generally 63 FR 19407–19408 (April 20, 1998).

For the reasons stated above, the Commission hereby adopts the following amendment to the DMCS, which is incorporated by reference in the Code of Federal Regulations (see 39 CFR part 3001, Appendix A to Subpart C—Postal Service Rates and Charges).

List of Subjects in 39 CFR Part 3001

Administrative practice and procedure, Postal Service.

For reasons set out in the preamble, the Commission amends 39 CFR part 3001 as follows:

PART 3001—RULES OF PRACTICE AND PROCEDURE

1. The authority citation for 39 CFR part 3001 continues to read as follows:

Authority: 39 U.S.C. 404(b), 3603, 3622–3624, 3661, 3662.

Subpart C—Rules Applicable to Requests for Establishing or Changing the Mail Classification Schedule

Appendix A to Subpart C—[Amended]

2. Appendix A to Subpart C—Postal Service Rates and Charges is amended as follows:

a. Remove 221.4.
b. Remove and reserve 223.4.
c. Remove ''Pre-barcoded parcels (experimental)'' and footnote 11 in First-Class Mail Rate Schedule 221, Letters and Sealed Parcels.

d. Remove note 5 in First-Class Mail Rate Schedule 223 Priority Mail Subclass.

Dated: June 23, 1998.

Margaret P. Crenshaw,

Secretary.

[FR Doc. 98–17249 Filed 6–26–98; 8:45 am]

BILLING CODE 7710–FW–P

ENVIRONMENTAL PROTECTION AGENCY

40 CFR Part 52

[IN85–1a; FRL–6115–7]

Approval and Promulgation of Implementation Plan; Indiana

AGENCY: Environmental Protection Agency (EPA).

ACTION: Direct final rule.

SUMMARY: On February 25, 1994, the State of Indiana submitted regulations as a revision to the ozone State Implementation Plan (SIP), governing the control of Volatile Organic Compound (VOC) emissions from graphic arts sources in Lake and Porter Counties. EPA approved these regulations on May 4, 1995, subject to the condition that the State adopt appropriate record keeping and reporting requirements. On July 24, 1997, the State of Indiana submitted a SIP revision request to the EPA containing, among other things, record keeping and reporting requirements for all graphic arts sources in Indiana. VOC is one of the air pollutants which combine on hot, sunny summer days with oxides of nitrogen to form ground-level ozone, commonly known as smog, in and downwind of significant source areas, such as large urban areas. Ozone pollution is of particular concern because of its harmful effects on lung tissue and breathing passages. The State's rule revisions are designed to meet the Clean Air Act (Act) requirement for States to adopt Reasonably Available Control Technology (RACT) rules for sources that are covered by Control Techniques Guideline (CTG) documents or that are major sources for VOC. This rulemaking action approves, through direct final action, the Indiana SIP revision request as it pertains to graphic arts sources.

DATES: The ''direct final'' rule is effective on August 28, 1998, unless EPA receives adverse or critical written comments by July 29, 1998. If adverse comments are received, EPA will publish a timely withdrawal of the rule in the **Federal Register** informing the public that the rule will not take effect.

ADDRESSES: Copies of the revision request are available for inspection at the following address: U.S. Environmental Protection Agency, Region 5, Air and Radiation Division, 77 West Jackson Boulevard, Chicago, Illinois 60604. (It is recommended that you telephone Mark J. Palermo at (312) 886–6082 before visiting the Region 5 Office.)

Written comments should be sent to: J. Elmer Bortzer, Chief, Regulation Development Section, Air Programs Branch (AR–18J), U.S. Environmental Protection Agency, 77 West Jackson Boulevard, Chicago, Illinois 60604.

FOR FURTHER INFORMATION CONTACT: Edward Doty, Environmental Scientist, at (312) 886–6057.

SUPPLEMENTARY INFORMATION:

I. Background

On November 15, 1990, Congress enacted amendments to the Clean Air Act; Pub. L. 101–549, 104 Stat. 2399, codified at 42 U.S.C. 7401–7671q.

Section 182(b)(2) of the Act requires all States with moderate and above ozone nonattainment areas to adopt RACT rules for VOC sources that are located within these ozone nonattainment areas and that are covered by CTG documents. One source category to be controlled by application of RACT rules is graphic arts.

In Indiana, VOC emission control requirements for graphic arts sources are contained in Indiana Administrative Code (IAC) rule 326 IAC 8–5–5. This rule applies to packaging rotogravure, publication rotogravure, and flexographic printing sources. On February 25, 1994, the State of Indiana submitted a revision request for its ozone SIP amending the graphic arts rule. This amendment functioned to reduce the source size applicability cut-off for graphic arts sources located in the severe ozone nonattainment area (Lake and Porter Counties) from 100 to 25 tons of VOC per year (potential to emit) as required by sections 182(b)(2) and 182(d) of the Act.

Based on a review of the February 25, 1994 submittal, the EPA proposed to conditionally approve the rule revision on January 10, 1995 (60 FR 2568), and completed final rulemaking to conditionally approve the SIP revision on May 4, 1995 (60 FR 22241). At that time, the EPA stated that, although the revised rule contained acceptable VOC emission control requirements for graphic arts sources, it did not include specific record keeping and reporting requirements needed to make the rule sufficiently enforceable. EPA's conditional approval was based on a December 14, 1994 commitment from the State to correct the rule to add appropriate record keeping and reporting requirements.

The rule revisions submitted by the Indiana Department of Environmental Management (IDEM) on July 24, 1997, were designed, in part, to provide the record keeping and reporting requirements for graphic arts sources. The submittal also includes additional revisions to rule 326 IAC 8–5–5. These rule revisions are addressed in this rulemaking.

IDEM's July 24, 1997 submittal also includes rule revisions for miscellaneous metal coating sources that employ the use of dip tanks or flow coating operations. These rule revisions will be addressed in a separate, future rulemaking.

II. Summary of Rule Revisions

In the discussion which follows, to remain consistent with definitions used by IDEM (these definitions differ in some respect from those used by other States and from those typically used by the EPA (EPA typically reverses the following definitions)), the following definitions are used in this rulemaking:

Facility means any one (1) structure, piece of equipment, installation, or operation which emits or has the potential to emit any air contaminant. Single pieces of equipment or single installations with multiple emission points shall be considered as a single facility.

Source means an aggregation of one (1) or more facilities which are located on one piece of property or on contiguous or adjacent properties, and which are owned or operated by the same person (or by persons under common control).

These definitions are found in Indiana's rules 326 IAC 1–2–27 and 326 IAC 1–2–72, respectively.

The following summarizes the contents of the newly adopted rules or the adopted revisions to the existing rules.

Rule 326 IAC 8–1–9

This rule has been adopted to cover general record keeping and reporting requirements for graphic arts sources subject to new rules 326 IAC 8–1–10 through 326 IAC 8–1–12. Rule 326 IAC 8-1–9 states that the applicable test methods and procedures specified in rule 326 IAC 8–1–4 (testing procedures) shall be used to determine: (1) the VOC content of each coating as applied; and (2) the efficiency of each emissions capture system and control device. Records required by this rule, including those used to demonstrate source exemption from applicable emission control requirements, must be submitted to IDEM or EPA upon request. All

applicable records are required to be maintained on-site in an accessible manner for three years and in a ''reasonably accessible'' manner for an additional two year period.

Rule 326 IAC 8–1–10

This rule has been adopted to cover compliance certification, record keeping, and reporting requirements for graphic arts sources that use compliant coatings (compliant with the requirements of rule 326 IAC 8–5–5). Upon startup of a facility, or upon changing the method of compliance to the use of compliant coatings, the owner or operator of the source must certify to IDEM that the source is in compliance with the requirements of this rule.

By May 1, 1997, or upon startup of a new coating facility, or upon changing the compliance method to the use of compliant coatings, the owner or operator of the facility shall for each coating facility and each coating used, collect and record each day and maintain all of the following information: (1) the name and identification number of each coating, as applied; and (2) the mass of VOC (excluding water and exempt compounds) per volume of coating, as applied, expressed in units necessary to determine compliance. As new coatings are added, the records for the facility must be updated to include the new coatings. If use of a coating is discontinued, the records for the discontinued coating must be maintained in compliance with rule 326 IAC 8–1–9.

Sources affected by this rule must notify IDEM if one of the following instances occurs:

(1) When noncompliant coatings are used, the owner or operator of the noncomplying facility must notify IDEM within 30 days following the use of the noncompliant coating, and must include the following information: (a) name and location of the coating facility; (b) time, date, and duration of the noncompliance; and (c) the corrective actions taken; or,

(2) At least 30 calendar days before changing the method of compliance from the use of compliant coatings to the use of daily-weighted averaging or to the use of control devices, the owner or operator shall comply with rule 326 IAC 8–1–11(b) or with rule 326 IAC 8–1–12(b). These rules require certification of the compliance of a facility with the applicable emission control requirements (see discussion of certification requirements below).

Rule 326 IAC 8–1–11

This rule applies to graphic arts sources for which compliance is based on the use of daily-weighted averaging. Upon startup of a new coating facility, or upon changing compliance to the use of daily-weighted averaging, the owner or operator of the coating facility must certify to IDEM that the coating facility is in compliance with the requirements of this rule. This certification must include:

(1) the name and location of the facility;

(2) the address and telephone number of the person responsible for the facility;

(3) the identification of each coating facility and identification of the applicable emission limit for each of these facilities;

(4) the name and identification number of each coating facility that will comply by means of daily-weighted averaging;

(5) the VOC content of each coating, as applied, each day for each coating facility, expressed in units necessary to determine compliance;

(6) the instrument or method that will be used to calculate the VOC content of each coating and the volume of each coating, as applied, used each day at each coating facility;

(7) the method by which the owner or the operator will create and maintain records each day;

(8) calculation of the daily-weighted average VOC emission rate/content level for a day representative of the current or projected maximum production levels; and,

(9) the time at which the coating facility's day begins if a time other than midnight local time is used to define a day.

For each coating facility and for each coating used, the owner or operator must record and maintain the following daily information:

(1) the name and identification number of each coating, as applied;

(2) the mass of VOC per volume (excluding water and exempt compounds) and the volume of each coating, as applied, in units necessary to determine compliance; and,

(3) the daily-weighted average VOC content of all coatings used in the coating facility.

On and after May 1, 1997, applicable sources must notify IDEM if one of the following instances occurs:

(1) When a record shows use of coatings with VOC contents exceeding a daily-weighted average limit, the owner or operator must submit a copy of the record to and notify IDEM within 30 days following the use of the noncompliant coatings, and must include the following information: (a) name and location of the coating facility; (b) date and duration of the noncompliance; and (c) the corrective actions taken; or,

(2) At least 30 calendar days before changing the method of compliance to the use of compliant coatings or to the use of emission control devices and away from the use of a daily-weighted average, the owner or operator shall comply with the requirements of 326 IAC 8–1–10(b) or with the requirements of 326 IAC 8–1–12(b) as appropriate.

Rule 326 IAC 8–1–12

This rule applies to graphic arts sources for which compliance is based on the use of emission control devices.

By May 1, 1997, or upon startup of a new coating facility, or upon changing the method of compliance for an existing coating facility to use of an emission control device, the owner or operator of the facility must comply with the following requirements:

(1) The control system operation, maintenance, and testing must meet the following requirements:

(a) The control system must be operated and maintained according to manufacturer recommendations, but may be modified based on compliance tests or upon written request of IDEM;

(b) A copy of the operating and maintenance procedures must be maintained at the facility for inspection by the control system operators and by IDEM;

(c) The control system must be tested initially, with follow-up compliance tests conducted no later than every 30 months after the initial control system test; and,

(d) Compliance tests must be conducted according to a protocol developed by IDEM at least 30 days before the test. The rule specifies the minimum information that must be contained in the protocol.

(2) The rule specifies the monitoring equipment requirements for each type of emission control equipment, covering the following emission control system types: thermal incinerators; catalytic incinerators; and carbon adsorbers.

On or after May 1, 1997, or after startup of a coating facility, or after switching the compliance method to use of an emission control device, the owner or operator must collect and record on a daily basis all of the following information for each coating facility:

(1) the name and identification number of each coating used;

(2) the mass of VOC per unit volume of coating solids, as applied, the volume solids content, as applied, and the

volume, as applied, of each coating, expressed in units necessary to determine compliance;

(3) the maximum VOC content (mass of VOC per unit volume of coating solids, as applied) or the daily-weighted average VOC content (mass of VOC per unit volume of coating solids, as applied) of the coatings used;

(4) the required overall emission reduction efficiency;

(5) the actual overall emission reduction efficiency achieved as determined during a compliance test conducted under rule 326 IAC 8–1–12(b)(1)(C);

(6) the control device monitoring data as specified in the rule for thermal incinerators, catalytic incinerators, or carbon adsorbers;

(7) a log of operating time for the capture system, control device, monitoring equipment, and associated coating facility; and,

(8) a maintenance log for the capture system, control device, and monitoring equipment detailing all routine and nonroutine maintenance performed, including dates and durations of any outages.

The owner or operator of a facility must notify IDEM within 30 calendar days of any noncompliance, identifying the control system for which noncompliance has occurred and the corrective actions taken. The owners or operators must also notify IDEM at least 30 calendar days in advance before switching to an alternative compliance method.

Rule 326 IAC 8–5–5

The source application portion of this rule has been modified to address (after October 1, 1993) sources located in Lake and Porter Counties as follows:

(1) Sources whose potential emissions of VOC are greater than or equal to 25 tons per year (22.7 megagrams per year) are subject to all requirements of this rule, as well as to the requirements of rules 326 IAC 8–1–9 through 326 IAC 8–1–12;

(2) Sources whose potential emissions of VOC are less than 25 tons per year but greater than or equal to 10 tons per year are exempt from the emission control requirements of the rule, but are subject to the certification, record keeping, and reporting requirements of rule 326 IAC 8–7–2(c) and rule 326 IAC 8–1–9(b); and,

(3) Sources whose potential emissions of VOC are less than 10 tons per year are subject to the record keeping and reporting requirements of rule 326 IAC 8–1–9(b) only. Rule 326 IAC 8–1–9(b) requires that records used to demonstrate that a source is exempt from emission control requirements be submitted to IDEM or to the EPA within 30 days of the receipt of a written request from either of these agencies.

Other changes in rule 326 IAC 8–5–5 are minor and cosmetic in nature and do not change the impact and basic requirements of the rule. These minor changes are acceptable and are not given further consideration here.

III. Technical Merits of Rule Revisions

Rules 326 IAC 8–1–9 through 326 IAC 8–1–12 have been added by IDEM to the VOC rules to cover record keeping and reporting requirements for graphic arts sources in Indiana. In developing these rules, IDEM followed the example graphic arts rule provided in EPA's June 25, 1992 model VOC rules. It is these model VOC rules that provide the primary guidance used here to judge the adequacy of Indiana's rule revisions.

Rule 326 8–5–5 was modified to refine the emission control, record keeping, and reporting requirements for graphic arts sources located in Lake and Porter Counties. This revision is needed given the lower emissions source cutoff for major VOC sources (25 tons per year) for sources in these counties, which are classified as ''severe'' nonattainment for ozone under section 181 of the Clean Air Act.

Rule 326 IAC 8–1–9

The general record keeping and reporting requirements contained in this new rule are acceptable and consistent with EPA's model VOC rules.

Rule 326 IAC 8–1–10

The record keeping and reporting requirements for the use of compliant coatings in graphic arts sources contained in this rule are generally acceptable. Two minor concerns, however, are noted in subdivisions (b)(5) and (c)(2) of this rule. Both of these rule subsections require the recording of the VOC mass content of coatings, as applied, excluding water and exempt compounds from the mass of VOC when determining the VOC content of the coating. The definition of VOC contained in 326 IAC 1–2–90, however, does not include water and exempt compounds. Therefore, the water and exempt compound exclusion clauses of subdivisions (b)(5) and (c)(2) have no meaning and no impacts. To be absolutely correct, these clauses should follow the references to ''volume'' in these subdivisions. These clauses should be relocated in the rule through technical corrections to the rule. However, taking into account that the misplaced clauses have no data recording and enforcement impacts, and noting that the remainder of these rule subdivisions agree with EPA's model VOC rules, EPA has concluded that rule 326 IAC 8–1–10 is approvable.

Rules 326 IAC 8–1–11 and 326 IAC 8–1–12

These rules are consistent with EPA's model VOC rules, and are acceptable.

Rule 326 IAC 8–5–5

The only changes in this rule of significance in this rulemaking are the changes made to subdivision (a)(3). These changes only affect graphic arts sources located in Lake and Porter Counties, where the Act requires (section 182(b)(2)) RACT for major sources (potential to emit VOC at a rate equal to or greater than 25 tons per year within Lake and Porter Counties as required by section 182(d) of the Act). For these sources, subdivision (a)(3)(A) of this rule requires full compliance with all requirements contained in rules 326 IAC 8–1–9 through 326 IAC 8–1–12, as well as with the emission control requirements of 326 IAC 8–5–5. This revised subdivision is acceptable.

New subdivision (a)(3)(B), which covers Lake and Porter Counties' graphic arts sources with potential VOC emissions less than 25 tons per year but greater than or equal to 10 tons per year, exempts these sources from the emission reduction requirements of rule 326 IAC 8–5–5, but requires these sources to submit data to confirm the appropriateness of source exemption and to make data available to IDEM or EPA upon request. These requirements are acceptable.

New subdivision (a)(3)(C), which covers the remainder of graphic arts sources in Lake and Porter Counties, those with potential VOC emissions below 10 tons per year, requires these sources to make records supporting source exemption available to IDEM or EPA within 30 days after receiving a data request. This rule is acceptable to the EPA.

IV. Final Rulemaking Action

EPA is approving the revisions of rules 326 IAC 8–1–9 through 326 IAC 8–1–12 and of rule 326 IAC 8–5–5 for graphic arts sources of VOC emissions as a revision to the Indiana State Implementation Plan as requested by the State of Indiana and as submitted to the EPA on July 24, 1997. The approval of these rules satisfies EPA's May 4, 1995 (60 FR 22240) conditional approval of 326 IAC 8–5–5, and supersedes EPA's earlier conditional approval.

It is noted that Indiana has indicated an intent to amend rules 326 IAC 8–1–

9 through 326 IAC 8–1–12 in the future to incorporate the record keeping and reporting requirements for all new coating VOC control rules. The approval given here is only applicable to the use of these rules for graphic arts sources. As these rule are amended in the future for other coating source categories, EPA will review the merits of these rules as they apply to those specific coating source categories. EPA is not approving these rules for generic application to all coating source categories.

The EPA is publishing this rule without prior proposal because EPA believes this is a noncontroversial revision and anticipates no adverse comments. However, in a separate document in this **Federal Register** publication, the EPA is proposing to approve the SIP revision should specified written adverse or critical written comments be filed. This rule will become effective without further notice unless EPA receives relevant adverse written comment on the parallel proposed rule (published in the proposed rules section of this **Federal Register**) by July 29, 1998. Should the EPA receive such comments, it will publish a rule informing the public that this rule did not take effect. Any parties interested in commenting on this rule should do so at this time. If no such comments are received, the public is advised that this rule will be effective on August 28, 1998.

Nothing in this rule should be construed as permitting, allowing or establishing a precedent for any future request for revision to any SIP. Each request for revision to the SIP shall be considered separately in light of specific technical, economic, and environmental factors and in relation to relevant statutory and regulatory requirements.

V. Administrative Requirements

A. Executive Order 12866

The Office of Management and Budget has exempted this regulatory action from Executive Order 12866 review.

B. Executive Order 13045

The final rule is not subject to Executive Order 13045, titled ''Protection of Children from Environmental Health Risks and Safety Risks,'' because it is not an ''economically significant'' action under Executive Order 12866.

C. Regulatory Flexibility

The Regulatory Flexibility Act (RFA) generally requires an agency to conduct a regulatory flexibility analysis of any rule subject to notice and comment rulemaking requirements unless the agency certifies that the rule will not have a significant economic impact on a substantial number of small entities. Small entities include small businesses, small not-for-profit enterprises, and small governmental jurisdictions.

This final rule will not have a significant impact on a substantial number of small entities because SIP approvals under section 110 and subchapter I, part D of the Clean Air Act do not create any new requirements but simply approve requirements that the State is already imposing. Therefore, because the Federal SIP approval does not create any new requirements, I certify that it does not have a significant economic impact on a substantial number of small entities. Moreover, due to the nature of the Federal-State relationship under the Clean Air Act, preparation of a flexibility analysis would constitute Federal inquiry into the economic reasonableness of the State action. The Clean Air Act forbids EPA to base its actions concerning SIPs on such grounds. *Union Electric Co.* v. *U.S. EPA*, 427 U.S. 246, 255–66 (1976); 42 U.S.C. 7410(a)(2).

D. Unfunded Mandates

Under section 202 of the Unfunded Mandates Reform Act of 1998, signed into law on March 22, 1995, EPA must undertake various actions in association with any proposed or final rule that includes a Federal mandate that may result in estimated costs to state, local, or tribal governments in the aggregate; or to the private sector, of $100 million or more. This Federal action approves pre-existing requirements under state or local law, and imposes no new requirements. Accordingly, no additional costs to state, local, or tribal governments, or the private sector result from this action.

E. Submission to Congress and the Comptroller General

The Congressional Review Act, 5 U.S.C. 801 *et seq.*, as added by the Small Business Regulatory Enforcement Fairness Act of 1996, generally provides that before a rule may take effect, the agency promulgating the rule must submit a rule report, which includes a copy of the rule, to each House of the Congress and to the Comptroller General of the United States. EPA will submit a report containing this rule and other required information to the U.S. Senate, the U.S. House of Representatives, and the Comptroller General of the United States prior to publication of the rule in the **Federal Register**. This rule is not a ''major rule'' as defined by 5 U.S.C. 804(2).

F. Petitions for Judicial Review

Under section 307(b)(1) of the Act, petitions for judicial review of this rule must be filed in the United States Court of Appeals for the appropriate circuit by August 28, 1998. Filing a petition for reconsideration by the Administrator of this final rule does not affect the finality of this rule for the purposes of judicial review nor does it extend the time within which a petition for judicial review may be filed, and shall not postpone the effectiveness of such rule or action. This rule may not be challenged later in proceedings to enforce its requirements. (See section 307(b)(2)).

List of Subjects in 40 CFR Part 52

Environmental protection, Air pollution control, Incorporation by reference, Intergovernmental relations, Reporting and recordkeeping requirements, Volatile organic compounds.

Dated: June 2, 1998.

David A. Ulrich,

Acting Regional Administrator, Region V.

For reasons stated in the preamble, part 52, chapter I, title 40 of the Code of Federal Regulations is amended as follows:

PART 52—[AMENDED]

1. The authority citation for Part 52 continues to read as follows:

Authority: 42 U.S.C. 7401 *et seq.*

2. Section 52.769 is amended by removing and reserving paragraph (b).

3. Section 52.770 is amended by adding paragraph (c)(122) to read as follows:

§ 52.770 Identification of plan.

* * * * *

(c) * * *

(122) On July 24, 1997, Indiana submitted rules requiring record keeping and reporting requirements for graphic arts sources of volatile organic compounds and amended source applicability requirements for graphic arts sources located in Lake and Porter Counties as a revision to the State Implementation Plan.

(i) Incorporation by reference.

(A) 326 IAC 8–1–9 General record keeping and reporting requirements. 326 IAC 8–1–10 Compliance certification, record keeping, and reporting requirements for certain coating facilities using compliant coatings. 326 IAC 8–1–11 Compliance certification, record keeping, and reporting requirements for certain coating facilities using daily weighted averaging. 326 IAC 8–1–12 Compliance

certification, record keeping, and reporting requirements for certain coating facilities using control devices. Adopted by the Indiana Air Pollution Control Board November 6, 1996. Filed with the Secretary of State April 22, 1997. Published at Indiana Register, Volume 20, Number 9, June 1, 1997. Effective May 22, 1997.

(B) 326 IAC 8–5–5 Graphic arts operations. Adopted by the Indiana Air Pollution Control Board November 6, 1996. Filed with the Secretary of State April 22, 1997. Published at Indiana Register, Volume 20, Number 9, June 1, 1997. Effective May 22, 1997.

[FR Doc. 98–17122 Filed 6–26–98; 8:45 am]

BILLING CODE 6560–50–P

ENVIRONMENTAL PROTECTION AGENCY

40 CFR Part 52

[PA–4071a; FRL–6104–4]

Approval and Promulgation of Air Quality Implementation Plans; Pennsylvania; Approval of VOC RACT Determinations for Individual Sources

AGENCY: Environmental Protection Agency (EPA).

ACTION: Direct final rule.

SUMMARY: EPA is approving a State Implementation Plan (SIP) revision submitted by the Commonwealth of Pennsylvania. This revision establishes and requires volatile organic compounds (VOC) reasonably available control technology (RACT) for eight (8) major sources located in Pennsylvania. The intended effect of this rule is to approve source-specific plan approvals and operating permits that establish the above-mentioned RACT requirements in accordance with the Clean Air Act. This action is being taken under section 110 of the Clean Air Act.

DATES: This final rule is effective August 28, 1998 unless the Agency receives adverse comment by July 29, 1998. Should the Agency receive adverse or critical comments it will publish a timely withdrawal in the **Federal Register** informing the public that this rule will not take effect.

ADDRESSES: Comments may be mailed to David Campbell, Air Protection Division, Mailcode 3AP11, U.S. Environmental Protection Agency, Region III, 841 Chestnut Building, Philadelphia, Pennsylvania 19107. Copies of the documents relevant to this action are available for public inspection during normal business hours at the Air Protection Division, U.S. Environmental Protection Agency, Region III, 841 Chestnut Building, Philadelphia, Pennsylvania 19107; the Air and Radiation Docket and Information Center, U.S. Environmental Protection Agency, 401 M Street, SW, Washington, DC 20460; Pennsylvania Department of Environmental Protection, Bureau of Air Quality Control, P.O. Box 8468, 400 Market Street, Harrisburg, Pennsylvania 17105.

FOR FURTHER INFORMATION CONTACT: David Campbell, (215) 566–2196, at the EPA Region III office or via e-mail at campbell.dave@epamail.epa.gov. While information may be requested via e-mail, any comments must be submitted in writing to the above Region III address.

SUPPLEMENTARY INFORMATION: On April 16, 1996 and March 24, 1998, the Commonwealth of Pennsylvania submitted formal revisions to its State Implementation Plan (SIP). Each source subject to this rulemaking will be identified and discussed below. Any plan approvals and operating permits submitted coincidentally with those being approved in this document, and not identified below, will be addressed in a separate rulemaking action.

Pursuant to sections 182(b)(2) and 182(f) of the Clean Air Act (CAA), Pennsylvania is required to implement RACT for all major VOC and NO_X sources by no later than May 31, 1995. The major source size is determined by its location, the classification of that area and whether it is located in the ozone transport region (OTR), which is established by the CAA. The Pennsylvania portion of the Philadelphia ozone nonattainment area consists of Bucks, Chester, Delaware, Montgomery, and Philadelphia Counties and is classified as severe. The remaining counties in Pennsylvania are classified as either moderate or marginal nonattainment areas or are designated attainment for ozone.

However, under section 184 of the CAA, at a minimum, moderate ozone nonattainment area requirements (including RACT as specified in sections 182(b)(2) and 182(f)) apply throughout the OTR. Therefore, RACT is applicable statewide in Pennsylvania. The Pennsylvania submittals that are the subject of this document are meant to satisfy the RACT requirements for eight (8) sources in Pennsylvania.

Summary of SIP Revision

The details of the RACT requirements for the source-specific plan approvals and operating permits can be found in the docket and accompanying technical support document (TSD) and will not be reiterated in this document. Briefly, EPA is approving a revision to the Pennsylvania SIP pertaining to the determination of RACT for eight (8) major sources. Several of the operating permits contain conditions irrelevant to the determination of VOC RACT. Consequently, these provisions are not being included in this approval for source-specific VOC RACT.

RACT Determinations

The following table identifies the individual operating permits EPA is approving. The specific emission limitations and other RACT requirements for these sources are summarized in the accompanying technical support document, which is available upon further request from the EPA Region III office listed in the **ADDRESSES** section of this document.

PENNSYLVANIA.—VOC AND NO_X RACT DETERMINATIONS FOR INDIVIDUAL SOURCES

Source	County	Plan approval (PA #) operating permit (OP #) compliance permit (CP #)	Source type	''Major source'' pollutant
The Fibre-Metal Products Company.	Delaware	23–0025	Miscellaneous manufacturing (safety products).	VOC
Finnaren & Haley, Inc	Montgomery	46–0070	Paint manufacturing	VOC
Fres-co System USA, Inc	Bucks	09–0027	Graphic arts	VOC
Graphic Packaging Corp	Chester	15–0013	Graphic arts	VOC

PENNSYLVANIA.—VOC AND NO_X RACT DETERMINATIONS FOR INDIVIDUAL SOURCES—Continued

Source	County	Plan approval (PA #) operating permit (OP #) compliance permit (CP #)	Source type	''Major source'' pollutant
Montour Oil Service Company	Lycoming	41–0013	Petroleum storage and distribution terminal.	VOC
Atlantic Refining and Marketing Corporation.	Northumberland	49–0015	Petroleum storage and distribution terminal.	VOC
Transwall Corp	Chester	15–0025	Graphic arts	VOC
Tavo Packaging, Inc	Bucks	09–0008	Miscellaneous manufacturing (office furniture).	VOC

EPA is approving this rule without prior proposal because the Agency views this as a noncontroversial amendment and anticipates no adverse comments. However, in the proposed rules section of this **Federal Register** publication, EPA is publishing a separate document that will serve as the proposal to approve the rule should adverse or critical comments be filed. This rule will be effective August 28, 1998 without further notice unless the Agency receives relevant adverse comments by July 29, 1998.

If EPA receives such comments, then EPA will publish a document withdrawing the final rule and informing the public that the rule did not take effect. All public comments received will then be addressed in a subsequent final rule based on the proposed rule. EPA will not institute a second comment period on the proposed rule. Only parties interested in commenting on this rule should do so at this time. If no such comments are received, the public is advised that this rule will be effective on August 28, 1998 and no further action will be taken on the proposed rule. If adverse comments are received that do not pertain to all paragraphs subject to this rule, those paragraphs not affected by the adverse comments will be finalized in the manner described here. Only those paragraphs that receive adverse comments will be withdrawn in the manner described here.

Final Action

EPA is approving eight (8) operating permits as VOC RACT for eight (8) individual sources.

Nothing in this action should be construed as permitting or allowing or establishing a precedent for any future request for revision to any state implementation plan. Each request for revision to the state implementation plan shall be considered separately in light of specific technical, economic, and environmental factors and in relation to relevant statutory and regulatory requirements.

Administrative Requirements

A. Executive Order 12866

The Office of Management and Budget (OMB) has exempted this regulatory action from E.O. 12866 review.

B. Regulatory Flexibility Act

Under the Regulatory Flexibility Act, 5 U.S.C. 600 *et seq.*, EPA must prepare a regulatory flexibility analysis assessing the impact of any proposed or final rule on small entities. 5 U.S.C. 603 and 604. Alternatively, EPA may certify that the rule will not have a significant impact on a substantial number of small entities. Small entities include small businesses, small not-for-profit enterprises, and government entities with jurisdiction over populations of less than 50,000.

SIP approvals under section 110 and subchapter I, part D of the Clean Air Act do not create any new requirements but simply approve requirements that the State is already imposing. Therefore, because the Federal SIP approval does not impose any new requirements, the Administrator certifies that it does not have a significant impact on any small entities affected. Moreover, due to the nature of the Federal-State relationship under the CAA, preparation of a flexibility analysis would constitute Federal inquiry into the economic reasonableness of state action. The Clean Air Act forbids EPA to base its actions concerning SIPs on such grounds. *Union Electric Co.* v. *U.S. EPA*, 427 U.S. 246, 255–66 (1976); 42 U.S.C. 7410(a)(2).

C. Unfunded Mandates Act

Under section 202 of the Unfunded Mandates Reform Act of 1995 (''Unfunded Mandates Act''), signed into law on March 22, 1995, EPA must prepare a budgetary impact statement to accompany any proposed or final rule that includes a Federal mandate that may result in estimated costs to State, local, or tribal governments in the aggregate; or to private sector, of $100 million or more. Under section 205, EPA must select the most cost-effective and least burdensome alternative that achieves the objectives of the rule and is consistent with statutory requirements. Section 203 requires EPA to establish a plan for informing and advising any small governments that may be significantly or uniquely impacted by the rule.

EPA has determined that the approval action promulgated does not include a Federal mandate that may result in estimated costs of $100 million or more to either State, local, or tribal governments in the aggregate, or to the private sector. This Federal action approves pre-existing requirements under State or local law, and imposes no new Federal requirements. Accordingly, no additional costs to State, local, or tribal governments, or to the private sector, result from this action.

D. Submission to Congress and the General Accounting Office

The Congressional Review Act, 5 U.S.C. 801 *et seq.*, as added by the Small Business Regulatory Enforcement Fairness Act of 1996, generally provides that before a rule may take effect, the agency promulgating the rule must submit a rule report, which includes a copy of the rule, to each House of the Congress and to the Comptroller General of the United States. Section 804, however, exempts from section 801 the following types of rules: rules of particular applicability; rules relating to agency management or personnel; and rules of agency organization, procedure, or practice that do not substantially affect the rights or obligations of non-agency parties. 5 U.S.C. 804(3). EPA is not required to submit a rule report

regarding today's action under section 801 because this is a rule of particular applicability.

E. Petitions for Judicial Review

Under section 307(b)(1) of the Clean Air Act, petitions for judicial review of this action must be filed in the United States Court of Appeals for the appropriate circuit by August 28, 1998. Filing a petition for reconsideration by the Regional Administrator of this final rule does not affect the finality of this rule for the purposes of judicial review nor does it extend the time within which a petition for judicial review may be filed, and shall not postpone the effectiveness of such rule or action. This action to approve VOC RACT determinations for a number of individual sources in Pennsylvania as a revision to the Commonwealth's SIP may not be challenged later in proceedings to enforce its requirements. (See section 307(b)(2).)

F. Executive Order 13045

Protection of Children from Environmental Health Risks and Safety Risks. Executive Order 13045 (62 FR 19885, April 23, 1997), applies to any rule that is (1) likely to be ''economically significant'' as defined under Executive Order 12866, and (2) the Agency has reason to believe that the environmental health or safety risk addressed by the rule may have a disproportionate effect on children. If a regulatory action meets both criteria, the Agency must evaluate the environmental health or safety effects of the planned rule on children, and explain why the planned regulation is preferable to other potentially effective and reasonably feasible alternatives considered by the Agency.

This rule is not subject to E.O. 13045, ''Protection of Children from Environmental Health Risks and Safety Risks'' because this is not an ''economically significant'' regulatory action as defined by E.O. 12866, and because it does not involve decisions on environmental health or safety risks that may disproportionately affect children.

List of Subjects in 40 CFR Part 52

Environmental protection, Air pollution control, Hydrocarbons, Incorporation by reference, Intergovernmental relations, Nitrogen dioxide, Ozone, Reporting and recordkeeping requirements.

Dated: May 13, 1998.

William Wisniewski,

Acting Regional Administrator, Region III.

40 CFR part 52, is amended as follows:

PART 52—[AMENDED]

1. The authority citation for part 52 continues to read as follows:

Authority: 42 U.S.C. 7401 et seq.

Subpart NN—Pennsylvania

2. Section 52.2020 is amended by adding paragraph (c)(132) to read as follows:

§ 52.2020 Identification of plan.

* * * * *

(c) * * *

(132) Revisions to the Pennsylvania Regulations, Chapter 129.91 pertaining to VOC RACT, submitted on April 16, 1996 and March 24, 1998 by the Pennsylvania Department of Environmental Protection.

(i) Incorporation by reference.

(A) Two (2) letters submitted by the Pennsylvania Department of Environmental Protection transmitting source-specific VOC RACT determinations in the form of operating permits on the following dates: April 16, 1996 and March 24, 1998.

(B) Operating permits (OP):

(*1*) The Fibre-Metal Products Company (Delaware County), OP 23–0025, effective February 20, 1998, except for the expiration date and conditions Nos. 16 and 17 relating to non-RACT provisions.

(*2*) Finnaren & Haley, Inc. (Montgomery County), OP 46–0070, effective March 5, 1998, except for the expiration date and conditions Nos. 13 and 15 relating to non-RACT provisions.

(*3*) Fres-co System USA, Inc. (Bucks County), OP 09–0027, effective March 5, 1998, except for the expiration date and conditions No. 22 relating to non-RACT provisions.

(*4*) Graphic Packaging Corporation (Chester County), OP 15–0013, effective February 28, 1998, except for the expiration date and conditions Nos. 19 and 20 relating to non-RACT provisions.

(*5*) Montour Oil Service Company (Lycoming County), OP 41–0013, effective March 19, 1998, except for the expiration date and conditions Nos. 7 and 9 relating to non-RACT provisions.

(*6*) Atlantic Refining and Marketing Corporation (Northumberland County), OP 49–0015, effective March 19, 1998, except for the expiration date and conditions Nos. 8 and 10 relating to non-RACT provisions.

(*7*) Transwall Corporation (Chester County), OP 15–0025, effective March 10, 1998, except for the expiration date and conditions Nos. 15, 19, and 21 relating to non-RACT provisions.

(*8*) Tavo Packaging, Inc. (Bucks County), OP 09–0008, effective November 8, 1995 except for the expiration date and condition No. 7 relating to non-RACT provisions.

(ii) Additional material.

(A) Remainder of the Commonwealth of Pennsylvania's April 16, 1996 and March 24, 1998 VOC and NO_X RACT SIP submittals for the relevant sources.

(B) Additional clarifying material submitted by Pennsylvania: Letter dated March 24, 1998 from James M. Seif, Secretary, Pennsylvania Department of Environmental Protection providing additional information on Tavo Packaging, Inc.

[FR Doc. 98–17117 Filed 6–26–98; 8:45 am]

BILLING CODE 6560–50–P

ENVIRONMENTAL PROTECTION AGENCY

40 CFR Parts 148, 268, and 271

[FRL–6115–4]

RIN 2050–AD79

Organobromine Production Wastes; Identification and Listing of Hazardous Waste; Land Disposal Restrictions: Listing of CERCLA Hazardous Substances, Reportable Quantities; Final Rule

AGENCY: Environmental Protection Agency (EPA).

ACTION: Technical amendment.

SUMMARY: On May 4, 1998, EPA published regulations listing two organobromine production wastes as hazardous. It also set land disposal restrictions prohibitions and treatment standards for those wastes. This document corrects purely technical errors in the final regulations.

EFFECTIVE DATE: This rule is effective on June 29, 1998.

ADDRESSES: Supporting materials for the final rule are available for viewing in the RCRA Information Center (RIC), located at Crystal Gateway One, 1235 Jefferson Davis Highway, First Floor, Arlington, VA. The Docket Identification Number is F–98–OBLF–FFFFF. The RCRA Docket is open from 9 a.m. to 4 p.m. Monday through Friday, except for Federal holidays. The public must make an appointment to review docket materials by calling (703) 603–9230. The public may copy a maximum of 100 pages from any regulatory document at no cost. Additional copies cost $0.15 per page.

FOR FURTHER INFORMATION CONTACT: For general information contact the RCRA Hotline at (800) 424–9346 (toll free) or (703) 920–9810 in the Washington, DC

metropolitan area. For information on this notice contact Rhonda Minnick (5302W), Office of Solid Waste, 401 M Street, S.W., Washington, DC 20460, (703) 308–8771.

SUPPLEMENTARY INFORMATION: This rule is available on the Internet. Please follow these instructions to access the rule electronically: From the World Wide Web (WWW), type http://www.epa.gov/epaoswer, then select option for Rules and Regulations.

The official record for this action is kept in a paper format, and is maintained at the address in the **ADDRESSES** section at the beginning of this document.

I. Reasons and Basis for Today's Amendment

The Agency has found a number of purely technical errors in the final rule. Today's amendment makes technical corrections where appropriate.

II. Amendments to the Final Rule

A. Section 148.18

Paragraph (f) of § 148.18 stated that the effective date of the prohibition for the underground injection of organobromine production wastes was August 3, 1998, the date 90 days from date of publication. This is in error. A waste cannot be prohibited from land disposal, including underground injection, before it is a hazardous waste. The wastes do not become hazardous until November 4, 1998, six months from the date of publication (63 FR 24596). Therefore, the effective date for § 148.18 is being amended to conform with the effective date of the listing, November 4, 1998.

B. Section 268.33

Paragraph (b) of § 268.33 is unnecessary and is thus being removed. The paragraph stated that the organobromine production wastes could be land disposed between May 4, 1998 and November 4, 1998 only in a unit meeting minimum technological requirements. Such a prohibition does not make sense, however, because the organobromine production wastes are not hazardous until November 4, 1998. To clarify that there is no prohibition on land disposal of these wastes between May 4, 1998 and November 4, 1998, paragraph (b) is omitted, paragraph (c) is designated as (b), and paragraph (d) is designated as (c).

Paragraph (c) (new paragraph (b)) is amended so that it no longer references paragraph (b), the paragraph being omitted as discussed above. Removal of this unneccesary cross-reference will make new paragraph (b) much easier to understand.

Paragraph (d) (new paragraph (c)) included language that applies only to wastes that display a hazardous characteristic. It stated: ''If the waste contains constituents (*including underlying hazardous constituents in characteristic wastes that have been diluted to remove the characteristic*) in excess of the applicable Universal Treatment Standard levels of § 268.48 of this Part, the waste is prohibited from land disposal, and all requirements of Part 268 are applicable, except as otherwise specified.'' The italicized phrase does not apply to organobromine production wastes because they are wastes that are listed as hazardous rather than ones that display a hazardous characteristic. The phrase is removed by this action.

C. Section 268.40

There was a mistake in the treatment standard table for K140. The table erroneously stated that the treatment standard for 2,4,6-Tribromophenol wastewaters was 0.35. The treatment standard is corrected to be 0.035, which conforms to the wastewater treatment standards for 2,4,6-Tribromophenol in U408, and in the Universal Treatment Standards table.

D. Section 271.1

There were two mistakes in § 271.1(j), Table 2. The effective dates in Table 2 appeared as August 3, 1998, and May 4, 2000. Both of these dates were incorrect. They are corrected by this amendment to be November 4, 1998.

III. Rationale for Immediate Effective Date

Today's notice does not create any new regulatory requirements; rather, it clarifies requirements by correcting a number of errors in the May 4, 1998 final rule. For these reasons, EPA finds that good cause exists under section 3010(b)(3) of RCRA, 42 U.S.C. 9903(b)(3), to provide for an immediate effective date. See generally 61 FR at 15662. For the same reasons, EPA finds that there is good cause under 5 U.S.C. 553(b)(3) to promulgate today's corrections in final form and that there is good cause under 5 U.S.C. 553(b)(3) to waive the requirement that regulations be published at least 30 days before they become effective.

IV. Analysis Under Executive Order 12866, the Unfunded Mandates Reform Act of 1995, the Regulatory Flexibility Act, the Paperwork Reduction Act, National Technology Transfer and Advancement Act of 1995, and Executive Order 13045

Under Executive Order 12866, this action is not a ''significant regulatory action'' and is therefore not subject to review by the Office of Management and Budget. In addition, this action does not impose annual costs of $100 million or more, will not significantly or uniquely affect small governments, and is not a significant federal intergovernmental mandate. The Agency thus has no obligations under sections 202, 203, 204 and 205 of the Unfunded Mandates Reform Act. Moreover, since this action is not subject to notice-and-comment requirements under the Administrative Procedure Act or any other statute, it is not subject to sections 603 or 604 of the Regulatory Flexibility Act, and it does not affect requirements under the Paperwork Reduction Act. Section 12(d) of the National Technology Transfer and Advancement Act of 1995 (NTTAA), Pub. L. No. 104–113, Section 12(d) (15 U.S.C. 272 note) directs EPA to use voluntary consensus standards in its regulatory activities unless to do so would be inconsistent with applicable law or otherwise impractical. Voluntary consensus standards are technical standards (e.g., materials specifications, test methods, sampling procedures, and business practices) that are developed or adopted by voluntary consensus standards bodies. The NTTAA directs EPA to provide Congress, through OMB, explanations when the Agency decides not to use available and applicable voluntary consensus standards. Neither this technical correction action nor the final rule involve technical standards. Therefore, EPA did not consider the use of any voluntary standards in this rulemaking. This final rule is not subject to E.O. 13045, entitled ''Protection of Children from Environmental Health Risks and Safety Risks'' (62 FR 19885, April 23, 1997), because this action is not an economically significant rule, and it does not involve decisions on environmental health risks or safety risks that may disproportionately affect children.

V. Submission to Congress and the General Accounting Office

The Congressional Review Act, 5 U.S.C. 801 *et seq.*, as added by the Small Business Regulatory Enforcement Fairness Act of 1996, generally provides that before a rule may take effect, the agency promulgating the rule must

submit a rule report, which includes a copy of the rule, to each House of the Congress and to the Comptroller General of the United States. Section 808 allows the issuing agency to make a good cause finding that notice and public procedure is impracticable, unnecessary or contrary to the public interest. This determination must be supported by a brief statement. 5 U.S.C. 808(2). As stated previously, EPA has made such a good cause finding, including the reasons therefore, and established an effective date of June 29, 1998. EPA will submit a report containing this rule and other required information to the U.S. Senate, the U.S. House of Representatives, and the Comptroller General of the United States prior to publication of the rule in the **Federal Register**. This action is [is not] a ''major rule'' as defined by 5 U.S.C. 804(2).

List of Subjects

40 CFR Part 148

Environmental protection, Administrative practice and procedure, Hazardous waste, Reporting and recordkeeping requirements, Water supply.

40 CFR Part 268

Hazardous waste, Reporting and recordkeeping requirements.

40 CFR Part 271

Environmental protection, Administrative practice and procedure, Confidential business information, Hazardous materials transportation, Hazardous waste, Indian lands, Intergovernmental relations, Penalties, Reporting and recordkeeping requirements, Water pollution control, Water supply.

Dated: June 18, 1998.

Timothy Fields, Jr.,

Acting Assistant Administrator, Office of Solid Waste and Emergency Response.

For the reasons set forth in the preamble, title 40, chapter I of the Code of Federal Regulations is amended as follows:

PART 148—HAZARDOUS WASTE INJECTION RESTRICTIONS

1. The authority citation for part 148 continues to read as follows:

Authority: Sec. 3004, Resource Conservation and Recovery Act, 42 U.S.C. 6901, *et seq.*

2. Section 148.18 is amended by revising paragraph (f) to read as follows:

§ 148.18 Hazardous waste injection restrictions.

* * * * *

(f) Effective November 4, 1998, the wastes specified in 40 CFR 261.32 as EPA Hazardous Waste number K140, and in 40 CFR 261.33(f) as EPA Hazardous Waste number U408 are prohibited from injection.

PART 268—LAND DISPOSAL RESTRICTIONS

3. The authority citation for Part 268 continues to read as follows:

Authority: 42 U.S.C. 6905, 6912(a), 6921, and 6924.

4. Section 268.33 is amended by removing paragraph (b), by redesignating paragraph (c) as (b), and paragraph (d) as (c), and revising redesignated paragraphs (b) introductory text, and (c) to read as follows:

§ 268.33 Waste-specific prohibitions—organobromine wastes.

* * * * *

(b) The requirements of paragraph (a) of this section do not apply if:

* * * * *

(c) To determine whether a hazardous waste identified in this section exceeds the applicable treatment standards specified in § 268.40, the initial generator must test a sample of the waste extract or the entire waste, depending on whether the treatment standards are expressed as concentrations in the waste extract or the waste, or the generator may use knowledge of the waste. If the waste contains constituents in excess of the applicable Universal Treatment Standard levels of § 268.48 of this part, the waste is prohibited from land disposal, and all requirements of part 268 are applicable, except as otherwise specified.

5. Section 268.40 is amended by revising in the table the entry for K140 to read as follows. The appropriate footnotes are republished without change.

§ 268.40 Applicability of treatment standards.

* * * * *

TREATMENT STANDARDS FOR HAZARDOUS WASTES

[Note: NA means not applicable.]

Waste code	Waste description and treatment/regulatory subcategory [1]	Regulated Hazardous Constituent		Waste-waters	Nonwaste-waters
		Common name	CAS [2] No.	Concentration in mg/l [3]; or technology code [4]	Concentration in mg/kg[5] unless noted as ''mg/l TCLP''; or technology code
*	*	*	*	*	*
K140	Floor sweepings, off-specification product, and spent filter media from the production of 2,4,6 tribromophenol..	2,4,6-Tribromophenol	118–79–6	0.035	7.4
*	*	*	*	*	*

Footnotes to Treatment Standard Table 268.40

[1] The waste descriptions provided in this table do not replace waste descriptions in 40 CFR 261. Descriptions of Treatment/Regulatory Subcategories are provided, as needed, to distinguish between applicability of different standards.

[2] CAS means Chemical Abstract Services. When the waste code and/or regulated constituents are described as a combination of a chemical with its salts and/or esters, the CAS number is given for the parent compound only.

[3] Concentration standards for wastewaters are expressed in mg/l and are based on analysis of composite samples.

[4] All treatment standards expressed as a Technology Code or combination of Technology Codes are explained in detail in 40 CFR 268.42 Table 1—Technology Codes and Descriptions of Technology-Based Standards.

[5] Except for Metals (EP or TCLP) and Cyanides (Total and Amenable) the nonwastewater treatment standards expressed as a concentration were established, in part, based upon incineration in units operated in accordance with the technical requirements of 40 CFR Part 264 Subpart O or Part 265 Subpart O, or based upon combustion in fuel substitution units operating in accordance with applicable technical requirements. A facility may comply with these treatment standards according to provisions in 40 CFR 268.40(d). All concentration standards for nonwastewaters are based on analysis of grab samples.

[6] Where an alternate treatment standard or set of alternate standards has been indicated, a facility may comply with this alternate standard, but only for the Treatment/Regulatory Subcategory or physical form (i.e., wastewater and/or nonwastewater) specified for that alternate standard.

[7] Both Cyanides (Total) and Cyanides (Amenable) for nonwastewaters are to be analyzed using Method 9010 or 9012, found in ''Test Methods for Evaluating Solid Waste, Physical/Chemical Methods,'' EPA Publication SW–846, as incorporated by reference in 40 CFR 260.11, with a sample size of 10 grams and a distillation time of one hour and 15 minutes.

[8] These wastes, when rendered nonhazardous and then subsequently managed in CWA, or CWA-equivalent systems, are not subject to treatment standards. (See § 268.1(c)(3)and (4)).

[9] These wastes, when rendered nonhazardous and then subsequently injected in a Class I SDWA well, are not subject to treatment standards. (See § 148.1(d)).

[10] Between August 26, 1996, and August 26, 1997, the treatment standard for this waste may be satisfied by either meeting the constituent concentrations in this table or by treating the waste by the specified technologies: combustion, as defined by the technology code CMBST at § 268.42 Table 1 of this Part, for nonwastewaters; and, biodegradation as defined by the technolgy code BIODG, carbon adsorption as defined by the technology code CARBN, chemical oxidation as defined by the technology code CHOXD, or combustion as defined as technology code CMBST at § 268.42 Table 1 of this Part, for wastewaters.

[11] For these wastes, the definition of CMBST is limited to: (1) combustion units operating under 40 CFR 266, (2) combustion units permitted under 40 CFR Part 264, Subpart O, or (3) combustion units operating under 40 CFR 265, Subpart O, which have obtained a determination of equivalent treatment under 268.42 (b).

PART 271—REQUIREMENTS FOR AUTHORIZATION OF STATE HAZARDOUS WASTE PROGRAMS

6. The authority citation for Part 271 continues to read as follows:

Authority: 42 U.S.C. 6905, 6912(a) and 6926.

Subpart A—Requirements for Final Authorization

7. Section 271.1(j) is amended by revising the entries in Table 2 for August 3, 1998 and for May 4, 2000 to read as follows:

§ 271.1 Purpose and scope.

* * * * *

(j) * * *

TABLE 2.—SELF-IMPLEMENTING PROVISIONS OF THE SOLID WASTE AMENDMENTS OF 1984

Effective date	Self-implementing provision	RCRA citation	Federal Register reference
*	* * *	* *	*
November 4, 1998	Prohibition on land disposal of newly listed and identified wastes..	3004(g)(4)(C) and 3004(m)	May 4, 1998; 63 FR 24596
November 4, 1998	Prohibition on land disposal of radioactive waste mixed with the newly listed and identified wastes, including soil and debris..	3004(m) 3004(g)(4)(C) and 3004(m)	Do.
*	* * *	* * *	*

* * * * *

[FR Doc. 98–17264 Filed 6–26–98; 8:45 am]

BILLING CODE 6560–50–P

FEDERAL COMMUNICATIONS COMMISSION

47 CFR Part 52

[CC Docket No. 95–116; FCC 98–82]

Telephone Number Portability

AGENCY: Federal Communications Commission.

ACTION: Final rule.

SUMMARY: On May 12, 1998, the Commission released a Third Report and Order in CC Docket No. 95–115, adopting measures to distribute the costs of long-term number portability among telecommunications carriers. In this order, the Commission decides that telecommunications carriers shall pay for the shared costs of the number portability regional databases based on each telecommunications carrier's end-user telecommunications revenues in each region, telecommunications carriers shall bear their own carrier-specific costs directly related to providing number portability, incumbent LECs have the option to recover their carrier-specific costs directly related to providing number portability through a five-year end user charge, as well as through number portability query charges to other carriers, and unregulated carriers may recover their carrier-specific costs directly related to providing number portability in any lawful manner. This Third Report and Order ensures that all telecommunications carriers bear the costs of number portability in a competitively neutral manner.

EFFECTIVE DATE: July 29, 1998, except for §§ 52.32(b) and 52.33(a)(1), which contain information collection requirements that are not effective until approved by the Office of Management and Budget. The Commission will publish a document in the **Federal Register** announcing the effective date for those sections.

FOR FURTHER INFORMATION CONTACT: Lloyd Collier at (202) 418–2712, or Neil Fried at (202) 418–1865, Competitive Pricing Division, Common Carrier Bureau.

SUPPLEMENTARY INFORMATION: This summarizes the Commission's Third Report and Order in CC Docket No. 95–116, In the Matter of Telephone Number Portability, FCC 98–82, RM 8535, adopted May 5, 1998, and released May 12, 1998. The file in its entirety is available for inspection and copying during the weekday hours of 9 a.m. to 4:30 p.m. in the Commission's Reference Center, room 239, 1919 M St., N.W., Washington D.C., or copies may be purchased from the Commission's duplicating contractor, ITS, Inc. 1231 20th St., N.W., Washington, D.C. 20036, phone (202) 857–3800.

ANALYSIS OF PROCEEDING

I. Background

A. The Provision of Long-Term Number Portability

The Telecommunications Act of 1996 amends the 1934 Act to provide for a pro-competitive, de-regulatory national policy framework designed to accelerate rapidly private sector deployment of advanced telecommunications and information technologies and services to all Americans by opening all telecommunications markets to competition. Congress added section 251(b)(2) to the 1934 Act, which requires all LECs, both incumbents and new entrants, ''to provide, to the extent technically feasible, number portability in accordance with requirements prescribed by the Commission.'' In light of Congress' number portability mandate, the Commission released a combined *First Report and Order* (Order) *& Further Notice of Proposed Rulemaking* (Further Notice) (61 FR 38605, July 25, 1996) in July 1996 to begin implementing number portability. Without number portability, customers ordinarily cannot change their local telephone companies unless they change telephone numbers. Under the existing network architecture and the North American Numbering Plan (NANP), a telephone number functions like an address: every number is associated with an individual switch operated by a particular local telephone company in a specific geographic area. The area code, also called the Numbering Plan Area (the NPA), identifies the general geographic area within which the switch provides service. The next three digits of the telephone number (the NXX) identify the switch that serves the customer. The last four digits identify the specific telephone line serving the customer's location. Carriers use this ten-digit number to connect a telephone call to the called party. Thus, if a customer changes local telephone companies and receives service at the same location from a different telephone company providing service from a different switch, the customer's new local telephone company typically must assign the customer a new seven-digit number (NXX code plus line number) associated with the new switch and new telephone line.

2. Number portability technology allows customers to retain their telephone numbers when changing local service providers. Although the Commission did not mandate a specific long-term number portability method, most carriers intend to provide long-term number portability through a location routing number (LRN) architecture. Under an LRN architecture, each switch is assigned a unique ten-digit LRN, the first six digits of which identify the location of that switch. Each customer's telephone number is matched in a regional database with the LRN for the switch that currently serves that telephone number. Each database serves an area that corresponds to one of the original regional Bell Operating Company (RBOC) service territories. Neutral third parties, called local number portability administrators (LNPAs), will administer these regional databases.

3. When a customer changes from one LEC to another, the carrier that wins the customer will ''port'' the customer's number from the former carrier by electronically transmitting (uploading) the new LRN to the administrator of the relevant regional database. This will pair the customer's original telephone number with the LRN for the switch of the new carrier, allowing the customer to retain the original telephone number. The regional database administrators will then electronically transmit (download) LRN updates to carrier-operated local service management systems (LSMSs). Each carrier will distribute this information to service control points (SCPs) or signal transfer points (STPs) that the carrier will use to store and process data for providing number portability.

4. For a carrier to route an interswitch telephone call to a location where number portability is available, the carrier must determine the LRN for the switch that serves the terminating telephone number of the call. Once number portability is available for an NXX, carriers must ''query'' all interswitch calls to that NXX to determine whether the terminating customer has ported the telephone number. Carriers will accomplish this by sending a signal over the SS7 network to retrieve from an SCP or STP the LRN associated with the called telephone number. The industry has proposed, and the Commission has endorsed, an ''N minus one'' (N–1) querying protocol. Under this protocol, the N–1 carrier will be responsible for the query, where ''N'' is the entity terminating the call to the end user, or a network provider contracted by the entity to provide tandem access. Thus the N–1 carrier (*i.e.* the last carrier before the terminating carrier) for a local call will usually be the calling customer's local service provider; the N–1 carrier for an interexchange call will usually be the calling customer's interexchange carrier (IXC). An N–1 carrier may perform its own querying, or it may arrange for other carriers or third parties to provide querying services on its behalf.

5. To route a local call under this system, the originating local service provider will examine the seven-digit number that its customer dialed, for example ''456–7890.'' If the called telephone number is on the originating switch (i.e. an intraswitch call), the originating local service provider will simply complete the call. If the call is interswitch, the originating local service provider will compare the NXX, ''456,'' with its table of NXXs for which number portability is available. If ''456'' is not such an NXX, the originating local service provider will treat the call the same as it did before the existence of long-term number portability. If it is an NXX for which portability is available, the originating local service provider will add the NPA, for instance ''123,'' to the dialed number and query ''(123) 456–7890'' to an SCP containing the LRNs downloaded from the relevant regional database. The SCP will return the LRN for ''(123) 456–7890'' (which would be ''(123) 456 XXXX'' if the customer has not changed carriers, or something like ''(123) 789-XXXX'' if the customer has changed carriers), and use the LRN to route the call to the appropriate switch with an SS7 message indicating that it has performed the query. The terminating carrier will then complete the call. To route an interexchange call, the originating local service provider will hand the call off to the IXC and the IXC will undertake the same procedure.

B. Prior Commission Decisions

6. The *Order*, as modified by the *First Memorandum Opinion and Order on Reconsideration* (First Reconsideration Order) (62 FR 18280, April 15, 1997), requires LECs to implement long-term number portability: (1) in Chicago, Philadelphia, Atlanta, New York, Los Angeles, Houston, and Minneapolis—the largest metropolitan statistical area (MSA) in each of the seven RBOC regions'between October 1, 1997, and March 31, 1998; (2) in the rest of the 100 largest MSAs in quarterly stages between January 1, 1998, and December 31, 1998; and (3) thereafter in switches outside the 100 largest MSAs, within six months of a request by a telecommunications carrier. A number of carriers have received extensions of the March 31, 1998, implementation deadline for certain areas ranging from two to five months.

7. The Commission explained that the statutory definition of number portability requires LECs to implement

number portability in such a way that LEC customers can keep their telephone numbers when they switch to any other telecommunications carrier, including, therefore, when they switch to a commercial mobile radio services (CMRS) provider. The Commission also required in the Order that certain types of CMRS providers be able by December 31, 1998, to route calls to any ported numbers and be able by June 30, 1999, to allow their own customers to take their telephone numbers to other carriers. By its language, section 251(b)(2) requires only that LECs provide number portability, and the 1934 Act, as amended, excludes from the definition of ''local exchange carrier'' those entities engaged in the provision of a commercial mobile service under section 332(c), except to the extent that the Commission finds that such service should be included in the definition of such term. Although the Commission declined in the *Order* to address whether CMRS providers are LECs, the Commission exercised authority under sections 1, 2, 4(i), and 332 to require three categories of CMRS providers'cellular providers, broadband personal communications service (PCS) providers, and covered specialized mobile radio (SMR) providers'to provide number portability. The Commission concluded that requiring these CMRS providers to provide number portability would serve the public interest by promoting competition between and among local wireless and wireline carriers, as well as among providers of interstate access service.

8. In the *Order*, the Commission exempted some CMRS providers from the obligation to provide number portability: paging and other messaging service providers, private paging service providers, business radio service providers, providers of land mobile service on 220–222 MHz, public coast stations, public land mobile service providers, 800 MHz air-ground radio-telephone service providers, offshore radio service providers, mobile satellite service providers, narrowband PCS service providers, local SMR licensees, and local multipoint distribution service (LMDS) providers. The Commission reasoned that such carriers currently have little impact on competition for local service.

9. In the *First Reconsideration Order*, the Commission concluded that within the 100 largest MSAs, LECs must provide number portability only in switches for which another carrier has specifically and reasonably requested the provision of number portability. The Commission reasoned that such an approach allows carriers to focus their resources where competitors plan to enter, which is where number portability is likely to have the most impact in the short run on the development of competition for local services. Structuring implementation in this fashion reduces costs, eases the demands on software vendors, and encourages efficient deployment, network planning, and testing. The Commission emphasized, however, that all carriers, even those operating portability-incapable switches, are still responsible for properly routing calls to telephone numbers in locations where number portability is available. Carriers can meet that responsibility either by routing the call to one of their switches that is capable of performing the necessary database query, or by arranging for another carrier or a third party to query the database or route the call.

10. In the *Second Report and Order* (62 FR 48774, September 17, 1997), the Commission determined that if an N–1 carrier arranges with another entity to perform queries on the carrier's behalf, that other entity may charge the N–1 carrier in accordance with requirements to be established in this *Third Report and Order*. The Commission also noted that when an N–1 carrier fails to ensure that a call is queried, the call might inadvertently be routed by default to the LEC that originally served the telephone number. If the number was ported, the LEC incurs costs in redirecting the call. This could happen, for example, if there is a technical failure in the N–1 carrier's ability to query, or if the N–1 carrier fails to ensure that its calls are queried, either through its own query capability or through an arrangement with another carrier or third-party. The Commission determined in the *Second Report and Order* that if a LEC performs queries on default-routed calls, the LEC may charge the N–1 carrier in accordance with requirements to be established in this *Third Report and Order*. The Commission determined further that it would allow LECs to block default-routed calls, but only in specific circumstances when failure to do so is likely to impair network reliability. The Commission also said that it would require LECs to apply this blocking standard to calls from all carriers on a nondiscriminatory basis.

II. The Statutory Framework

A. Federal/State Jurisdiction

11. We conclude that section 251(e)(2) requires the Commission to ensure that carriers bear the costs of providing long-term number portability on a competitively neutral basis for both interstate and intrastate calls. In reaching this conclusion, we note that section 251(e)(2) expressly and unconditionally grants the Commission authority to ensure that carriers bear the costs of providing number portability on a competitively neutral basis.

12. Consequently, we find that section 251(e)(2) authorizes the Commission to provide the distribution and recovery mechanism for all the costs of providing long-term number portability. We conclude that an exclusively federal recovery mechanism for long-term number portability will enable the Commission to satisfy most directly its competitive neutrality mandate, and will minimize the administrative and enforcement difficulties that might arise were jurisdiction over long-term number portability divided. Further, such an approach obviates the need for state allocation of the shared costs of the regional databases, a task that would likely be complicated by the databases' multistate nature. Under the exclusively federal number portability cost recovery mechanism, incumbent LECs' number portability costs will not be subject to jurisdictional separations. Instead, we will allow incumbent LECs to recover their costs pursuant to requirements we establish in this *Third Report and Order*.

B. Scope of Section 251(e)(2)

13. We interpret the terms of section 251(e)(2) in ways that will best implement its goals. The 1996 Act amended the 1934 Act to provide for a pro-competitive, de-regulatory national policy framework and to open all telecommunications markets to competition. Section 251(b)(2) furthers those congressional goals by requiring all LECs to provide number portability so that subscribers of local telephone service can retain their telephone numbers when changing carriers. At the same time, by requiring the Commission to ensure that all telecommunications carriers bear on a competitively neutral basis the costs of providing number portability, section 251(e)(2) seeks to prevent those costs from themselves undermining competition.

14. We conclude that ''the cost[s] of establishing '' number portability'' to be borne on a competitively neutral basis include the costs that LECs incur to meet the obligations imposed by section 251(b)(2), as well as the costs other telecommunications carriers'such as IXCs and CMRS providers'incur for the industry-wide solution to local number portability.[1] The Act defines number

[1] Under the N–1 protocol recommended by the industry under the auspices of the NANC, and the

portability as the ability of users of telecommunications services to retain, at the same location, existing telecommunications numbers without impairment of quality, reliability, or convenience when switching from one telecommunications carrier to another. Thus, ''the costs of number portability'' are the costs of enabling telecommunications users to keep their telephone numbers without degradation of service when they switch carriers. Such costs include the costs a carrier incurs to make it possible to transfer a telephone number to another carrier, as well as the costs involved in making it possible to route calls to customers who have switched carriers (i.e., the costs involved in making the N–1 querying protocol possible). IXCs and CMRS providers, as well as LECs, incur these costs.

15. We also adopt the tentative conclusion in the *Further Notice* that costs not directly related to providing number portability, as defined further below, are not costs of providing number portability. Consequently, such costs need not ''be borne by all telecommunications carriers on a competitively neutral basis'' under section 251(e)(2). Section 251(e)(2) requires that the costs of providing number portability be borne on a competitively neutral basis. Costs not directly related to providing number portability encompass a wide range of costs that carriers incur to provide telecommunications functions unrelated to number portability. We find no indication that Congress intended to place such costs within the scope of the competitive neutrality requirement of section 251(e)(2). Because costs not directly related to providing number portability are not subject to 251(e)(2), the Commission is not obligated under that section to create special provisions to ensure that they are borne on a competitively neutral basis.

16. We also conclude that section 251(e)(2) requires the Commission to ensure that number portability costs are distributed among, as well as recovered by, carriers on a competitively neutral basis. Despite the Commission's tentative conclusion that section 251(e)(2) only applies to the distribution of number portability costs, we now find ambiguous the scope of the language requiring that costs ''be borne * * * on a competitively neutral basis.'' We find further that reading section 251(e)(2) as applying to both distribution and recovery best achieves the congressional goal of ensuring that the costs of providing number portability do not restrict the local competition that number portability is intended to encourage. Because the manner in which carriers recover the costs of providing number portability could affect their ability to compete, we cannot ensure that number portability costs are ''borne by all telecommunications carriers on a competitively neutral basis'' unless we address both distribution and recovery. If the Commission ensured the competitive neutrality of only the distribution of costs, carriers could effectively undo this competitively neutral distribution by recovering from other carriers. For example, an incumbent LEC could redistribute its number portability costs to other carriers by seeking to recover them in increased access charges to IXCs. Therefore, we find that section 251(e)(2) requires the Commission to ensure that both the distribution and recovery of intrastate and interstate number portability costs occur on a competitively neutral basis.

C. Competitive Neutrality

17. We adopt the Commission's tentative conclusion to apply to long-term number portability the Order's definition of competitive neutrality as requiring that the cost of number portability borne by each carrier does not affect significantly any carrier's ability to compete with other carriers for customers in the marketplace. Applying this definition will ensure that the cost of implementing number portability does not undermine the goal of the 1996 Act to promote a competitive environment for the provision of local communications services.

18. We also adopt the Commission's tentative conclusion to apply to long-term number portability the two-part test the Commission developed to determine whether carriers will bear the interim costs of number portability on a competitively neutral basis. Under this test, the way carriers bear the costs of number portability: (1) must not give one service provider an appreciable, incremental cost advantage over another service provider when competing for a specific subscriber, and (2) must not disparately affect the ability of competing service providers to earn a normal return.

19. Accordingly, we adopt for purposes of long-term number portability the *Order's* definition of competitive neutrality as requiring that the cost of number portability borne by each carrier does not affect significantly any carrier's ability to compete with other carriers for customers in the marketplace. We also adopt the two-part test for determining whether this definition is met. We apply this interpretation of competitive neutrality to the shared costs of providing number portability below. We find it unnecessary to address whether to apply our competitive neutrality principles to states that opt out of the regional database plan because no state elected to opt out by the July 1, 1997, deadline. We apply the interpretation of competitive neutrality to the carrier-specific costs directly related to providing number portability below.

III. Categorization of Costs

20. We adopt the Commission's tentative conclusion to divide the costs raised by this proceeding into three categories: (1) shared costs; (2) carrier-specific costs directly related to providing number portability; and (3) carrier-specific costs not directly related to providing number portability. The division of costs between shared costs and carrier-specific costs directly related to providing number portability recognizes that some costs of providing number portability are incurred by regional database administrators, while others are incurred by carriers in the first instance. The division between carrier-specific costs directly related to providing number portability and carrier-specific costs not directly related to providing number portability recognizes that some component of the costs carriers incur will provide carriers with benefits unrelated to number portability.

21. We adopt the Commission's tentative definition of shared costs as costs incurred by the industry as a whole, such as those incurred by the third-party administrator to build, operate, and maintain the databases needed to provide number portability. We also conclude that once the shared costs are allocated they are attributable to specific carriers, at which point we will treat them as carrier-specific costs directly related to providing number portability.

22. We also adopt the Commission's tentative subcategorization of the shared costs into nonrecurring costs, recurring costs, upload costs, and download costs. We clarify, however, that the shared upload and download costs include only the costs that the database administrators incur to process uploads and downloads; the costs that the carriers incur individually to process uploads and downloads are carrier-specific costs directly related to providing number portability.

Commission's requirements for the provision of long-term number portability, almost all telecommunications carriers'including LECs, IXCs, and CMRS providers'will incur costs of number portability.

23. We further conclude that query costs are not shared costs initially incurred by the regional database administrators, but are carrier-specific costs directly related to providing number portability. At the time of the *Further Notice*, the Commission's understanding had been that the regional administrators might perform queries for carriers. In that case, query costs might have constituted shared costs because the database administrators would have incurred costs for the industry as a whole, and the costs would need to be allocated among individual carriers. The industry has chosen, however, not to adopt this approach to number portability. Instead, the N–1 carrier will incur all querying costs individually in the first instance, either by querying its own copy of data downloaded from the regional databases, or by arranging for the querying of such a database copy maintained by another carrier or other third party. Because the regional database administrators will not perform queries on behalf of carriers, query costs are more appropriately considered carrier-specific costs directly related to providing number portability.

24. We conclude that carrier-specific costs directly related to providing number portability are limited to costs carriers incur specifically in the provision of number portability services, such as for the querying of calls and the porting of telephone numbers from one carrier to another. Costs that carriers incur as an incidental consequence of number portability, however, are not costs directly related to providing number portability.

25. We reject the requests of some commenters that we classify the entire cost of an upgrade as a carrier-specific cost directly related to providing number portability just because some aspect of the upgrade relates to the provision of number portability. Carriers incur costs for software generics, switch hardware, and OSS, SS7 or AIN upgrades to provide a wide range of services and features. Consequently, only a portion of such joint costs are carrier-specific costs directly related to providing number portability. Thus, we will consider as subject to the competitive neutrality mandate of section 251(e)(2) all of a carrier's dedicated number portability costs, such as for number portability software and for the SCPs and STPs reserved exclusively for number portability. We will also consider as carrier-specific costs directly related to the provision of number portability that portion of a carrier's joint costs that is demonstrably an incremental cost carriers incur in the provision of long-term number portability. Apportioning costs in this way will further the goals of section 251(e)(2) by recognizing that providing number portability will cause some carriers, including small and rural LECs, to incur costs that they would not ordinarily have incurred in providing telecommunications service. At the same time, this approach recognizes that some upgrades will enhance carriers' services generally, and that at least some portion of such upgrade costs are not directly related to providing number portability.

26. Because carrier-specific costs directly related to providing number portability only include costs carriers incur specifically in the provision of number portability, carriers may not use general overhead loading factors in calculating such costs. Carriers already allocate general overhead costs to their rates for other services, and allowing general overhead loading factors for long-term number portability might lead to double recovery. Instead, carriers may identify as carrier-specific costs directly related to providing long-term number portability only those incremental overheads that they can demonstrate they incurred specifically in the provision of long-term number portability.

27. As discussed below, we are permitting incumbent LECs to recover their number portability costs in federally tariffed end-user charges and query services. To facilitate determination of the portion of joint costs carriers shall treat as carrier-specific costs directly related to providing number portability, and to facilitate evaluation of the cost support that carriers will file in their federal tariffs, we are requesting that carriers and interested parties file comments by August 3, 1998 proposing ways to apportion the different types of joint costs. Carriers and interested parties may file reply comments by September 16, 1998. We will delegate authority to the Chief, Common Carrier Bureau, to determine appropriate methods for apportioning joint costs among portability and nonportability services, and to issue any orders to provide guidance to carriers before they file their tariffs, which are to take effect no earlier than February 1, 1999.

28. We decline to create special cost categories for the number portability costs of small and rural carriers. The Commission's definitions of carrier-specific costs directly and not directly related to providing number portability will enable all carriers, including small and rural carriers, as well as carriers providing Extended Area Service, to identify the costs subject to section 251(e)(2). The three cost categories the Commission has created account for all potential number portability costs and provide workable distinctions for the purposes of implementing section 251(e)(2).

29. Creating unique cost categories for wireless carriers is also unnecessary at this time. The Commission's definitions are not tied to unique technological constraints of wireline communications, and nothing in the record leads us to conclude that the three cost categories are too narrow to apply to the number portability costs of wireless carriers. Wireless carriers, like wireline carriers, will depend upon the regional databases, and the record does not suggest that the costs of the regional databases are disproportionately affected by any one industry segment.

IV. Costs of the Regional Databases

A. Distribution of Shared Costs: Allocation v. Usage-Based Rates

30. We require telecommunications carriers to pay for the database administrators' nonrecurring, recurring, upload, and download costs pursuant to an allocator, which we select below, rather than on a usage-sensitive basis. We have used the two-prong competitive neutrality test to ensure that the allocator we choose distributes these costs on a competitively neutral basis. Once these shared costs are distributed to telecommunications carriers, we treat each carrier's portion of the costs as a carrier-specific cost directly related to providing number portability. Because telecommunications carriers will recover these costs as carrier-specific costs directly related to providing number portability, which we discuss below, we need not address their recovery here.

31. Distributing the shared costs among telecommunications carriers in proportion to database use would shift these costs to telecommunications carriers that win more customers because such carriers will perform more uploads. At the outset of number portability, these carriers are more likely to be competitive LECs. Consequently, usage-sensitive distribution of the shared costs could give one service provider an appreciable, incremental cost advantage over another service provider when competing for a specific subscriber, as well as disparately affect the ability of competing service providers to earn a normal return. Although the record does not show conclusively that usage-based charges would hamper materially a carrier's ability to compete for subscribers, we

believe it prudent at this early stage in the deployment of number portability to minimize such risk.

32. Moreover, assessing shared costs on a usage-sensitive basis could discourage carriers from performing uploads and downloads, or at least penalize those carriers that do so more frequently. The entire industry benefits from the maintenance of reliable regional databases for providing number portability: unless carriers download data, they will be unable to terminate traffic to the appropriate end-user; unless carriers upload ported numbers to the databases, the databases will be inaccurate, making downloads useless for current and future database participants alike. Thus, all carriers that port telephone numbers and all carriers that terminate calls to portability-capable NXXs depend on the timely uploading and downloading of information to and from the regional databases to ensure an accurate database and the proper routing of telephone calls. Furthermore, all telecommunications carriers that depend on the availability of telephone numbers will benefit from number portability because it allows subscribers to retain their telephone numbers when changing local service providers, and because it facilitates the conservation of telephone numbers through number pooling.

33. We will not adopt a separate distribution methodology for wireless carriers. The record indicates that wireless carriers will use the regional databases in the same manner as wireline carriers. Consequently, we see no reason to treat wireless carriers differently than wireline carriers with respect to the distribution of the shared costs.

B. The Allocator

34. As part of its management duties under § 52.26 of the Commission's Rules, the LNPA of each regional database must collect sufficient revenues to fund that database. We will require the LNPA of each regional database to do this by allocating the costs of each regional database among carriers in proportion to each carrier's intrastate, interstate, and international end-user telecommunications revenues attributable to that region. The Commission adopted end-user telecommunications revenues in the *Universal Service Order* (62 FR 32862, June 17, 1997) as the assessment base for determining contributions to universal support mechanisms. We will require carriers to include intrastate, interstate, and international revenues in calculating end-user revenues because number portability will affect all such services. An end-user telecommunications revenue allocator is similar to a retail-revenues allocator in that both are based on telecommunications revenues that carriers collect from end-users. Unlike retail-revenues, however, end-user telecommunications revenues includes revenues derived from subscriber line charges (SLCs).[2] End-user telecommunications revenues also include revenues collected from carriers that purchase telecommunications services for their own internal use.

35. The end-user telecommunications revenue allocator meets the two-prong competitive neutrality test. First, the allocator will not give one service provider an appreciable, incremental cost advantage when competing for a subscriber. Because the end-user telecommunications revenue allocator will distribute the shared costs of the regional databases to each carrier in proportion to that carrier's end-user revenues, it will cost carriers approximately the same increase in shared costs to win a specific subscriber. For example, if one of two LECs wins a third LEC's subscriber, whichever of the two LECs wins the subscriber will win the end-user revenue that subscriber generates, which will increase its allocated portion of the shared costs. Because the subscriber is likely to use approximately the same amount of local service regardless which of the two competing LECs provides service to the subscriber, the incremental shared cost one of the two LECs would experience if it had won the subscriber would be about the same as the incremental shared cost the other would experience if it won the subscriber. This increase would also approximately equal the decrease in shared costs the third carrier would experience, having lost the subscriber. These amounts may not be exactly the same because each of the three carriers may have different rates and may not collect exactly the same revenue from that subscriber. The difference, however, will not be significant enough to create an appreciable, incremental cost disadvantage. Furthermore, any difference will not be caused by providing number portability, but by differences in the underlying efficiency, services, and rates of each of the carriers. Thus we believe the allocator will not itself create an appreciable, incremental cost advantage that was not already present even absent number portability.

[2] The SLC is a flat monthly per-line rate that the end user pays.

36. Second, allocating shared costs in proportion to end-user revenues will prevent the shared costs from disparately affecting the ability of carriers to earn a normal return. Because carriers' allocations of the shared costs will vary directly with their end-user revenues, their share of the regional database costs will increase in proportion to their customer base. Thus, no carrier's portion of the shared costs will be excessive in relation to its expected revenues, and its allocated share will only increase as it increases its revenue stream. Consequently, the end-user revenues allocator will not disparately affect competing carriers' abilities to earn a normal return. An end-user revenues allocator will also be easy to administer because carriers already track their sales to end-users for billing purposes, and will be familiar with the end-user revenues allocator from its use for universal service support contributions. Although an end-user revenues allocator will relieve pure wholesalers, which have no end-user revenue, from directly bearing shared costs, the end-user method does not exclude wholesale revenues from the revenue base that determines carriers' shared costs. As the Commission explained in the *Universal Service Order,* wholesale charges are built into retail rates, and thus the allocator still reflects wholesale revenue. This is competitively neutral because it avoids double-counting revenues, and because wholesale carriers are not competing with retail carriers for end users in the marketplace.

C. Carriers Required To Share the Costs of the Regional Databases

37. We will require allocation of the shared costs among all telecommunications carriers because section 251(e)(2) states that ''[t]he cost of establishing * * * number portability shall be borne by all telecommunications carriers on a competitively neutral basis.'' Our end-user revenues allocator, by its nature, does not reach carriers, such as pure wholesalers, that do not have end-user revenues. Because section 251(e)(2) requires all carriers to bear the costs of number portability on a competitively neutral basis, we will require carriers that do not have end-user revenues to pay $100 per year per region as their statutory share of the shared costs. We believe that $100 represents a fair contribution for carriers that do not have end-user revenues, but can revisit this issue should it become necessary. This fee will not give any such carriers an appreciable, incremental cost advantage when competing for a

subscriber because such carriers do not compete for end-user customers. Moreover, this charge will be the same for all such carriers. Thus, it will not create any disadvantage to the extent these carriers are competing with each other. This fee is also not likely to disparately affect the ability of competing carriers to earn a normal return because such a nominal charge is unlikely to affect a carrier's return and, again, because all such carriers will face the same charge. Consequently, such a fee is competitively neutral.

D. Regional v. National Allocation of Regional Database Costs

38. We will require telecommunications carriers to bear the shared costs on a regional basis because such a plan is most consistent with the regional nature of the databases, and because a national approach would require designation of a national administrator. As part of its duties established in § 52.26 of the Commission's Rules,[3] each local number portability administrator of a regional database shall collect sufficient revenues from all telecommunications carriers providing telecommunications service in areas that regional database serves to fund the operation of that regional database. Thus, after subtracting the charges it collects from telecommunications carriers with no end-user revenues, each database administrator shall distribute the remaining shared costs based upon each remaining telecommunications carrier's proportion of the end-user revenues collected by all telecommunications carriers in that region. To apply the end-user revenues allocator, administrators may request regional end-user revenues data from telecommunications carriers once a year. We direct telecommunications carriers to comply with such requests. One of the objectives of the biennial review of our regulations required under the Communications Act is to consider ways to reduce filing burdens on carriers. The Commission may further consider in the biennial review or other proceedings how best to administer the allocation of the shared costs.

39. We are aware that some carriers have already begun paying their regional database administrators based on temporary agreements negotiated by the regional LLCs. We will permit, but not require, each regional administrator and LLC to adjust prospectively through a reasonable true-up mechanism the future bills of those carriers that participated in such agreements so that the shared costs each such carrier will have contributed approaches what those carriers would have paid had an end-user telecommunications revenue allocator been in place when carriers started paying the regional administrators. Permitting the regional administrators and LLCs to perform such true-ups ensures that costs are recovered from carriers in a manner consistent with our rules, while accounting for the period prior to the effective date of our rules and recognizing that agreements may have been reasonable mechanisms to recover regional database costs on a temporary basis pending this *Third Report and Order*.

V. Carrier-Specific Costs Directly Related to Providing Number Portability

40. We will allow but not require incumbent LECs subject to rate-of-return or price-cap regulation to recover their carrier-specific costs directly related to providing number portability through a federal charge assessed on end-users. As noted, we recognize consumers' sensitivity to end-user charges. Under the circumstances before us, however, we conclude that allowing carriers to recover number portability costs in this manner will best serve the goals of the statute. The Commission has only two sources from which it may allow carriers to recover costs in the federal jurisdiction: charges IXCs pay LECs for exchange access, and end-user charges. Because number portability is not an access-related service and IXCs will incur their own costs for the querying of long-distance calls, we will not allow LECs to recover long-term number portability costs in interstate access charges. Nor would it likely be competitively neutral to do so. We note further that, like long-term number portability, the advent of equal access and 800 number portability required carriers to incur significant costs to modify their networks, although these costs were not recovered in federal end-user charges. These improvements led to increased competition and substantial long-term benefits to consumers. We anticipate a similarly positive effect for consumers with respect to the impact of number portability, namely the increased choice and lower prices that result from the competition that number portability helps make possible. We also note that number portability will facilitate number pooling, which will help forestall telephone-number exhaust.[4]

41. Carriers not subject to rate regulation—such as competitive LECs, CMRS providers, and non-dominant IXCs—may recover their carrier-specific costs directly related to providing number portability in any lawful manner consistent with their obligations under the Communications Act.[5] Requiring incumbent LECs to bear their own carrier-specific costs of providing number portability and allowing them to recover those costs from their own customers, while leaving other carriers unregulated, meets our competitive neutrality standard that number portability cost distribution and recovery mechanisms: (1) not give one service provider an appreciable, incremental cost advantage over another service provider when competing for a specific subscriber, and (2) not disparately affect the ability of competing service providers to earn a normal return.

42. Requiring incumbent LECs to bear their own carrier-specific costs directly related to providing number portability will not disadvantage any telecommunications carrier because under an LRN implementation of long-term number portability a carrier's costs should vary directly with the number of customers that carrier serves. Our examination of the present record and cost data that some carriers have provided indicates that incumbent LECs, competitive LECs, and CMRS providers competing in the local service market are likely to have approximately the same long-run incremental number portability cost of winning a subscriber. Incumbent LECs will likely have large absolute costs because of their large networks, but they also will have a large customer base over which to spread those costs; competitive LECs and CMRS providers will likely incur fewer absolute costs because of their smaller networks, but they will also likely have smaller customer bases over which to spread those costs.

43. Some small LECs and CMRS providers may find that their smaller customer bases make adding number portability capability in their own

[3] These duties include all management tasks required to run the regional databases.

[4] Until now, local service providers had to be assigned entire NXXs, even if they did not need all 10,000 of the NXX's telephone numbers. With the advent of number portability, carriers can share NXXs and pool unused telephone numbers, which results in more efficient allocation of telephone numbers and reduces the need for measures such as area-code overlays to combat telephone number exhaust.

[5] Although generally not rate regulated, competitive LECs, CMRS providers, and IXCs—as telecommunications carriers—remain subject to the Communications Act and Commission rules.

networks uneconomical. Such carriers can benefit from economies of scale similar to those of incumbent LECs, however, by arranging for another carrier or third-party provider to provide number portability functionality for them, as it appears that a market for number portability services may develop. Similarly, they may enter into cooperative agreements with other small carriers. Conversely, such carriers might install number portability in their networks and sell any excess number portability capacity to other carriers. Because resellers will simply be reselling the number portability capability of a facilities-based carrier, we would expect that resellers will also have comparable incremental number portability costs. Similarly, we would expect that carriers competing for interexchange customers will bear the costs of providing number portability associated with N–1 queries in rough proportion to the number of interexchange customers they serve; the more customers they win, the more queries they must perform to terminate those customers' calls. IXCs and CMRS providers can either query interexchange calls themselves or arrange for other carriers or third-party providers to provide querying service for them.

44. Regulating the recovery of number portability costs by incumbent LECs, but not by competitive LECs, CMRS providers, and IXCs, also will not place any carrier at a competitive disadvantage. Creating an optional end-user charge for incumbent LECs ensures that such carriers have a reasonable opportunity to recover their costs and at the same time allows carriers to forego some or all of such charges if they deem it necessary to compete in the local service market. Similarly, unregulated carriers may recover their costs in end-user charges if they choose to do so. Regulating incumbent LEC recovery should not disadvantage incumbent LECs as compared to competitive LECs because competitive LECs also have number portability costs under LRN. If a customer does switch to a competitive LEC, that customer may have to pay end-user charges or service rates that recover the competitive LEC's portability costs. Thus, the customer's incentive to leave the incumbent LEC is offset by the fact that the customer would then have to pay charges that recover the competitive LEC's number portability costs. Therefore, incumbent LECs are unlikely to have a material disadvantage in competing for subscribers under our recovery mechanism.

45. We also observe that under LRN-based long-term number portability the LEC serving the customer who places a local call will generally be responsible for the query. Thus, winning a customer shifts responsibility for the queries needed to complete that customer's local calls from the original carrier to the acquiring carrier. Similarly, the IXC serving the customer who places an interexchange call will be responsible for any query needed. Consequently, under the LRN approach to number portability, query costs follow customers, and requiring each carrier to bear its own carrier-specific costs directly related to providing number portability is competitively neutral.

46. Under the requirements we adopt today, an incumbent LEC may recover its carrier-specific costs directly related to providing long-term number portability to end users by establishing a monthly, number portability charge in tariffs filed with the Commission. We determine, however, that recovery from end users should be designed so that end users generally receive the charges only when and where they are reasonably able to begin receiving the direct benefits of long-term number portability. To achieve this, we will allow the monthly number-portability charge to begin no earlier than February 1, 1999, on a date the incumbent LEC carrier selects, and to last no longer than five years. We choose this start date for the federal end-user charge because by the end of 1998, under the implementation schedule the Commission has mandated for number portability, a large proportion of customers will reside in areas where number portability is available: the largest 100 MSAs.[6] In contrast, if the end-user charge were permitted to start immediately, substantially fewer customers would be in areas where number portability is available. Thus, the February 1, 1999, start date will better tailor recovery to areas where customers can receive number portability than would an earlier start date for recovery. We choose February 1, 1999, rather than January 1, 1999, to provide a brief additional time-period to ensure that number portability has been implemented before customers incur charges, and because carriers will also be filing tariff revisions to take effect January 1, 1999, to implement PICC and SLC adjustments.

47. In addition, we will allow an incumbent LEC to assess the monthly charge only on end users it serves in the 100 largest MSAs, and end users it serves outside the 100 largest metropolitan statistical areas from a number-portability-capable switch. Because carriers may make any switch number-portability capable, this approach will encourage carriers to install number portability and help ensure that end-users are assessed number portability charges only where they are reasonably likely to be benefitting from number portability. If a carrier receives an extension past February 1, 1999, for one of the 100 largest MSAs, the carrier may not assess the monthly charge in that MSA until it begins providing long-term number portability in the MSA. The incumbent local exchange carrier shall levelize[7] the monthly number-portability charge over five years by setting a rate for each charge at which the present value of the revenue recovered by the charge equals the present value of the cost being recovered. The carriers shall use a discount rate equal to the rate of return on investment which the Commission has authorized for regulated interstate access services pursuant to Part 65 of the Commission's Rules. Currently, this rate is 11.25 percent. We require levelization of the monthly charge to protect consumers from varying rates. Incumbent LECs may collect less than the maximum allowable charge, or decline to collect the charge, from some or all of their customers so long as they do so in a reasonable and nondiscriminatory manner. Thus we will not, for example, allow incumbent LECs to offset such lower charges by collecting higher charges in areas where no competitive carriers are present.

48. We choose the five-year period for the end-user charge because it will enable incumbent LECs to recover their portability costs in a timely fashion, but will also help produce reasonable charges for customers and avoid imposing those charges for an unduly long period. A longer period would increase the total charges consumers pay because, as discussed, carriers' unrecovered capital investment will be subject to an 11.25 percent return, while a shorter period would increase the monthly charge to consumers. We find that a five-year period effectively balances these concerns. After a carrier

[6] The top 100 MSAs comprise approximately 61.1% of all subscriber lines, a conservative estimate, based on our calculation that approximately 61.1% of the United States population resides in the 100 largest MSAs. We calculated this percentage from population estimates of the United States Census Bureau.

[7] A levelized rate is one that is calculated to remain constant over a recovery period and is set at the level at which the discounted present value of the stream of payments is equal to the discounted present value of the stream of costs over the period.

establishes its levelized end-user charge in the tariff review process we do not anticipate that it may raise the charge during the five-year period unless it can show that the end-user charge was not reasonable based on the information available at the time it was initially set. Furthermore, once incumbent LECs have recovered their initial implementation costs, number portability will be a normal network feature, and a special end-user charge will no longer be necessary to ensure that incumbent LECs recover their number portability costs on a competitively neutral basis. Carriers can recover any remaining costs through existing mechanisms available for recovery of general costs of providing service.

49. We will allow incumbent LECs to assess one monthly number-portability charge per line, except that one PBX trunk shall receive nine monthly number-portability charges and one primary rate interface integrated services digital network line (PRI ISDN line) shall receive five monthly number-portability charges. As the Commission observed in the access charge reform proceeding, a PBX trunk provides on average the equivalent service capacity of nine Centrex lines. *See In re Access Charge Reform*, Second Order on Reconsideration and Memorandum Opinion and Order (62 FR 56120, October 29, 1997). We set the PBX charge at nine times the level of the ordinary charge because Centrex and PBX arrangements are functionally equivalent. To do otherwise could encourage a large customer to choose one of these arrangements over the other because of the number portability charge, and thus would not be competitively neutral. Similarly, the access charge reform proceeding set a five to one equivalency ratio for PRI ISDN lines, and we apply that equivalency ratio here. To further our goals for the Lifeline Assistance Program, carriers may not impose the monthly number-portability charge on customers in that program.

50. The incumbent LEC may assess the monthly charge on resellers of the incumbent LEC's local service, as well as on purchasers of switching ports as unbundled network elements under section 251 of the Communications Act, because the incumbent LEC will be providing the underlying number portability functionality even though the incumbent LEC will no longer have a direct relationship with the end user. Thus, it appears that the reseller and the purchaser of the unbundled switch port will receive all their number portability functionality through these arrangements. Consequently, allowing the incumbent LEC to assess the charge will be competitively neutral because the reseller and the purchaser of the switch port will incur the charge in lieu of costs they would otherwise incur in obtaining long-term number portability functionality elsewhere. The unregulated reseller and purchaser of the switch port may recover in any lawful manner the charges the incumbent LEC assesses on them. The incumbent local exchange carrier may not assess the monthly number-portability charge on carriers that purchase the incumbent local exchange carrier's local loops as unbundled network elements under section 251. We do not allow the incumbent LEC to assess such a charge because the unbundled loop does not contain the number portability functionality. The purchaser of the unbundled loop will still be responsible for providing such functionality, and thus incurring elsewhere the corresponding cost. Congress has directed the Commission to provide for the recovery of number portability costs. Because we have so provided in this proceeding, we presume that state commissions will not include the costs of number portability when pricing unbundled network elements.

51. Local service providers may query calls for other carriers by arrangement, or may receive unqueried, default-routed traffic when the N–1 carrier has not performed the query. Thus we also will allow incumbent LECs to recover from N–1 carriers in a federally tariffed query-service charge their carrier-specific costs directly related to providing prearranged and default query services. Other carriers required or permitted to file federal tariffs may also tariff query services. Carriers shall indicate in the cost support section of their tariffs the portion of their carrier-specific costs directly related to providing number portability attributable to the number portability services they provide end users, and that portion attributable to the number portability query services they provide on behalf of other carriers.

52. All the RBOCs and GTE have submitted, and periodically revised, estimates of the costs they will incur in implementing LRN number portability. In reviewing the record, we observe a wide variation among companies' estimated costs and their categorization of those costs as directly related or not directly related to providing number portability. We remind the incumbent LECs that only costs directly related to providing number portability are recoverable through the long-term number portability cost recovery mechanism we establish in this *Third Report and Order.* As discussed above, the Chief, Common Carrier Bureau, will further consider methods of identifying the portion of joint costs that incumbent LECs should treat as carrier-specific costs directly related to providing number portability.

VI. Regulatory Flexibility Act Analysis

53. As required by section 603 of the Regulatory Flexibility Act (RFA), an Initial Regulatory Flexibility Analysis (IRFA) was incorporated in the *Further Notice.* The Commission sought written public comments on the proposals in the *Further Notice,* including on the IRFA. The Commission's Final Regulatory Flexibility Analysis (FRFA) in this *Third Report and Order* is as follows:

54. Need for and Objectives of Rules: The Commission, in compliance with sections 251(b)(2), 251(d)(1), and 251(e)(2) of the Communications Act of 1934, as amended by the Telecommunications Act of 1996, adopts rules and procedures intended to ensure the implementation of telephone number portability with the minimum regulatory and administrative burden on telecommunications carriers. In implementing the statute, the Commission has the responsibility to adopt rules that will implement most quickly and effectively the national telecommunications policy embodied in the Act and to promote the pro-competitive, deregulatory markets envisioned by Congress. Congress has recognized that number portability will lower barriers to entry and promote competition in the local exchange marketplace. To prevent the cost of number portability from itself becoming a barrier to local competition, however, section 251(e)(2) requires that ''[t]he cost of establishing telecommunications numbering administration arrangements and number portability shall be borne by all telecommunications carriers on a competitively neutral basis as determined by the Commission.''

55. Summary of Significant Issues Raised by the Public in Response to the IRFA: There were no comments submitted specifically in response to the IRFA. However, in their general comments, some commenters assert that if competition is to emerge in the local exchange market the regulatory standards adopted by the Commission to recover the cost of implementing long-term number portability should not disproportionately burden small entities, especially new entrants. In the *Third Report and Order,* we adopt rules and regulations to ensure that the way

all telecommunications carriers, including small entities, bear the costs of number portability does not significantly affect any carrier's ability to compete with other carriers for customers in the marketplace.

56. Description and Estimate of Number of Small Businesses to Which Rules Will Apply: The Regulatory Flexibility Act generally defines the term ''small business'' as having the same meaning as the term ''small business concern'' under the Small Business Act. A small business concern is one which (1) is independently owned and operated; (2) is not dominant in its field of operation; and (3) satisfies any additional criteria established by the Small Business Administration (SBA). According to the SBA's regulations, entities engaged in the provision of telephone service may have a maximum of 1,500 employees in order to qualify as a small business concern. This standard also applies in determining whether an entity is a small business for purposes of the RFA.

57. Our rules governing long-term number portability cost recovery apply to all telecommunications carriers, including incumbent LECs, new LEC entrants, and IXCs, as well as cellular, broadband PCS, and covered SMR providers. Small incumbent LECs subject to these rules are either dominant in their field of operations or are independently owned and operated, and, consistent with the Commission's prior practice, are excluded from the definition of ''small entities'' and ''small business concerns.'' Accordingly, our use of the terms ''small entities'' and ''small businesses'' does not encompass small incumbent LECs. Out of an abundance of caution, however, for regulatory flexibility analysis purposes, we will consider small incumbent LECs within this analysis and use the term ''small incumbent LECs'' to refer to any incumbent LECs that arguably might be defined by the SBA as ''small business concerns.''

58. Insofar as our rules apply to all telecommunications carriers, they may have an economic impact on a substantial number of small businesses, as well as on small incumbent LECs. The rules may have an impact upon new entrant LECs and small incumbent LECs, as well as cellular, broadband PCS, and covered SMR providers. Based upon data contained in the most recent census and a report by the Commission's Common Carrier Bureau, we estimate that 2,100 small entities could be affected. We have derived this estimate based on the following analysis:

59. According to the 1992 Census of Transportation, Communications, and Utilities, there were approximately 3,469 firms with under 1,000 employees operating under the Standard Industrial Classification (SIC) category 481—Telephone. See U.S. Dept. of Commerce, Bureau of the Census, 1992 Census of Transportation, Communications, and Utilities (issued May 1995). Many of these firms are the incumbent LECs and, as noted above, would not satisfy the SBA definition of a small business because of their market dominance. There were approximately 1,350 LECs in 1995. Industry Analysis Division, FCC, Carrier Locator: Interstate Service Providers at Table 1 (Number of Carriers Reporting by Type of Carrier and Type of Revenue) (December 1995). Subtracting this number from the total number of firms leaves approximately 2,119 entities which potentially are small businesses which may be affected. This number contains various categories of carriers, including small incumbent LECs, competitive access providers, cellular carriers, interexchange carriers, mobile service carriers, operator service providers, pay telephone operators, PCS providers, covered SMR providers, and resellers. Some of these carriers—although not dominant—may not meet the other requirement of the definition of a small business because they are not ''independently owned and operated.'' See 15 U.S.C. § 632(a)(1). For example, a PCS provider which is affiliated with a long distance company with more than 1,500 employees would not meet the definition of a small business. Another example would be if a cellular provider is affiliated with a dominant LEC. Thus, a reasonable estimate of the number of ''small businesses'' affected by this Order would be approximately 2,100.

60. Description of Projected Reporting, Recordkeeping and Other Compliance Requirements of the Rules: The *Third Report and Order* concludes that the costs raised in this proceeding should be divided into three categories: shared costs, carrier-specific costs directly related to number portability, and carrier-specific costs not directly related to number portability. Shared costs are those costs incurred on behalf of the industry as a whole, such as the costs of the regional database administrator to build, operate, and maintain the databases needed to provide number portability. The *Third Report and Order* concludes that all telecommunications carriers with end-user revenues are required to pay an allocated portion of the shared costs incurred by the regional database administrator in proportion to that carrier's international, interstate, and intrastate end-user telecommunications revenues for that region. While carriers already track their sales to end-users for billing purposes, they will need to identify their regional end-user revenues. That information, along with periodic updates, must be provided to the regional database administrator for the appropriate allocation of shared costs.

61. The *Third Report and Order* requires incumbent LECs to maintain records that detail both the nature and specific amount of those carrier-specific costs that are directly related to number portability, and those carrier-specific costs that are not directly related to number portability. The *Third Report and Order* directs carriers and interested parties to file comments by August 3, 1998, and reply comments by September 16, 1998, proposing ways to apportion the different types of joint costs between portability and nonportability services. The *Third Report and Order* requires incumbent LECs that choose to recover their carrier-specific costs directly related to providing number portability to use federally-tariffed end-user charges.

62. Steps Taken to Minimize Impact on Small Entities Consistent with Stated Objectives: The record in this proceeding indicates that the need for customers to change their telephone numbers when changing local service providers is a barrier to local competition. Requiring number portability, and ensuring that all telecommunications carriers bear the costs of number portability on a competitively neutral basis, will make it easier for competitive providers, many of which may be small entities, to enter the market. We have attempted to keep regulatory burdens on all local exchange carriers to a minimum to ensure that the public receives the benefits of the expeditious provision of service provider number portability in accordance with the statutory requirements. For example, the *Third Report and Order* concludes that all telecommunications carriers with end-user revenues are required to pay an allocated portion of the shared costs incurred by the regional database administrator in proportion to that carrier's international, interstate, and intrastate end-user telecommunications revenues for the region. Apportioning shared costs in this way will further the statutory purpose of ensuring that carriers bear the costs of number portability on a competitively neutral basis. Furthermore, the *Third Report and Order* concludes that regulated

carriers may identify that portion of their joint costs that is demonstrably an incremental cost that they incurred in the provision of long-term number portability. Allowing such identification recognizes that number portability will cause some carriers, including small entities, to incur costs that they would not ordinarily have incurred in providing telecommunications services. The *Third Report and Order* also concludes that non-dominant carriers, such as competitive LECs, CMRS providers, and IXCs—some of which will be small entities—are not subject to extensive regulation and may recover their number portability costs in any manner otherwise consistent with Commission rules and the Communications Act.

63. Report to Congress: The Commission shall send a copy of this FRFA, along with this *Third Report and Order,* in a report to Congress pursuant to the Small Business Regulatory Enforcement Fairness Act of 1996. A copy of the *Third Report and Order* and this FRFA (or summaries thereof) will also be published in the **Federal Register** and will be sent to the Chief Counsel for Advocacy of the Small Business Administration.

VII. Paperwork Reduction Act

64. This *Third Report and Order* concludes that the costs raised in this proceeding should be divided into three categories: shared costs, carrier-specific costs directly related to number portability, and carrier-specific costs not directly related to number portability. Shared costs are those costs incurred on behalf of the industry as a whole, such as the costs of the regional database administrator to build, operate, and maintain the databases needed to provide number portability. The *Third Report and Order* concludes that all telecommunications carriers with end-user revenues are required to pay an allocated portion of the shared costs incurred by the regional database administrator in proportion to that carrier's international, interstate, and intrastate end-user telecommunications revenues for the region. While carriers already track their sales to end-users for billing purposes, they will need to identify their regional end-user revenues. That information, along with periodic updates, must be provided to the regional database administrator for the appropriate allocation of shared costs. The *Third Report and Order* also requires incumbent LECs to maintain records that detail both the nature and specific amount of those carrier-specific costs that are directly related to number portability, and those carrier-specific costs that are not directly related to number portability. The *Third Report and Order* requires incumbent LECs that choose to recover their carrier-specific costs directly related to providing number portability to use federally-tariffed end-user charges. These information collection requirements are contingent upon approval of the Office of Management and Budget (OMB).

VIII. Ordering Clauses

65. Accordingly, it is ordered that pursuant to authority contained in sections 1, 2, 4(i), 201–205, 215, 251(b)(2), 251(e)(2), and 332 of the Communications Act of 1934, as amended, 47 U.S.C. §§ 151, 152, 154(i), 201–205, 215, 251(b)(2), 251(e)(2), and 332, Part 52 of the Commission's rules is amended as set forth.

66. It is further ordered that the policies, rules and requirements set forth herein are adopted.

67. It is further ordered that the policies, rules and requirements adopted herein shall be effective on July 29, 1998, except for §§ 52.32(b) and 52.33(a)(1), which contain information collection requirements that are not effective until approved by the Office of Management and Budget. The Commission will publish a document in the **Federal Register** announcing the effective date for those sections.

68. It is further ordered that the Commission's Office of Public Affairs, References Operations Division, shall send a copy of this Third Report and Order, including the Final Regulatory Flexibility Analysis, to the Chief Counsel for Advocacy of the Small Business Administration.

69. It is further ordered that incumbent local exchange carriers may file tariffs to take effect no earlier than February 1, 1999, setting out the monthly number portability charge they intend to collect from their end users, in accordance with this Order.

70. It is further ordered that pursuant to authority contained in section 5(c)(1) of the Communications Act of 1934, as amended, 47 U.S.C. 155(c)(1), the Chief, Common Carrier Bureau, is delegated authority to determine appropriate methods for apportioning joint costs among portability and nonportability services, and to issue any orders to provide guidance to incumbent LECs before they file their tariffs, which are to take effect no earlier than February 1, 1999. To facilitate determination of the portion of joint costs carriers shall treat as carrier-specific costs directly related to providing number portability, and to facilitate evaluation of the cost support that carriers will file in their federal tariffs, carriers and interested parties may file comments by August 3, 1998 proposing ways to apportion the different types of joint costs. Carriers and interested parties may file reply comments by September 16, 1998.

List of Subjects in 47 CFR Part 52

Carrier-specific costs, Communications common carriers, Long-term number portability cost recovery, Number portability, Regional databases, Shared costs.

Federal Communications Commission.

Magalie Roman Salas,

Secretary.

Rule Changes

Accordingly, part 52 of Title 47 of the Code of Federal Regulations is amended to read as follows:

PART 52—NUMBERING

1. The authority for part 52 continues to read as follows:

Authority: Sec. 1, 2, 4, 5, 48 Stat. 1066, as amended; 47 U.S.C. § 151, 152, 154, 155, 251 unless otherwise noted. Interpret or apply secs. 3, 4, 201–05, 207–09, 218, 225–27, 251–52, 271 and 332, 48 Stat. 1070, as amended, 1077; 47 U.S.C. 153, 154, 201–05, 207–09, 218, 225–27, 251–52, 271 and 332 unless otherwise noted.

2. Add § 52.32 to read as follows:

§ 52.32 Allocation of the shared costs of long-term number portability

(a) The local number portability administrator, as defined in § 52.21(h), of each regional database, as defined in § 52.21(1), shall recover the shared costs of long-term number portability attributable to that regional database from all telecommunications carriers providing telecommunications service in areas that regional database serves. Pursuant to its duties under § 52.26, the local number portability administrator shall collect sufficient revenues to fund the operation of the regional database by:

(1) Assessing a $100 yearly contribution on each telecommunications carrier identified in paragraph (a) introductory text that has no intrastate, interstate, or international end-user telecommunications revenue derived from providing telecommunications service in the areas that regional database serves, and

(2) Assessing on each of the other telecommunications carriers providing telecommunications service in areas that regional database serves, a charge that recovers the remaining shared costs of long-term number portability attributable to that regional database in proportion to the ratio of:

(i) The sum of the intrastate, interstate, and international end-user

telecommunications revenues that such telecommunications carrier derives from providing telecommunications service in the areas that regional database serves, ii) to the sum of the intrastate, interstate, and international end-user telecommunications revenues that all telecommunications carriers derive from providing telecommunications service in the areas that regional database serves.

(b) The local number portability administrator for a particular regional database may require the telecommunications carriers providing telecommunications service in the areas served by the regional database to provide once a year that data necessary to calculate, pursuant to paragraph (a)(1) or (a)(2) of this section, those carriers' portions of the shared costs of long-term number portability attributable to that regional database. All such telecommunications carriers shall comply with any such requests.

(c) Once a telecommunications carrier has been allocated, pursuant to paragraph (a)(1) or (a)(2) of this section, its portion of the shared costs of long-term number portability attributable to a regional database, the carrier shall treat that portion as a carrier-specific cost directly related to providing number portability.

3. Add § 52.33 to read as follows:

§ 52.33 Recovery of carrier-specific costs directly related to providing long-term number portability.

(a) Incumbent local exchange carriers may recover their carrier-specific costs directly related to providing long-term number portability by establishing in tariffs filed with the Federal Communications Commission a monthly number-portability charge, as specified in paragraph (a)(1), and a number portability query-service charge, as specified in paragraph (a)(2).

(1) The monthly number-portability charge may take effect no earlier than February 1, 1999, on a date the incumbent local exchange carrier selects, and may end no later than five years after that date.

(i) An incumbent local exchange carrier may assess each end user it serves in the 100 largest metropolitan statistical areas, and each end user it serves from a number-portability-capable switch outside the 100 largest metropolitan statistical areas, one monthly number-portability charge per line except that:

(A) One PBX trunk shall receive nine monthly number-portability charges.

(B) One PRI ISDN line shall receive five monthly number-portability charges.

(C) Lifeline Assistance Program customers shall not receive the monthly number-portability charge.

(ii) An incumbent local exchange carrier may assess on carriers that purchase the incumbent local exchange carrier's switching ports as unbundled network elements under section 251 of the Communications Act, and resellers of the incumbent local exchange carrier's local service, the same charges as described in paragraph (a)(1)(A) of this section, as if the incumbent local exchange carrier were serving those carriers' end users.

(iii) An incumbent local exchange carrier may not assess a monthly number-portability charge for local loops carriers purchase as unbundled network elements under section 251.

(iv) The incumbent local exchange carrier shall levelize the monthly number-portability charge over five years by setting a rate for the charge at which the present value of the revenue recovered by the charge does not exceed the present value of the cost being recovered, using a discount rate equal to the rate of return on investment which the Commission has prescribed for interstate access services pursuant to Part 65 of the Commission's Rules.

(2) The number portability query-service charge may recover only carrier-specific costs directly related to providing long-term number portability that the incumbent local exchange carrier incurs to provide long-term number portability query service to carriers on a prearranged and default basis.

(b) All telecommunications carriers other than incumbent local exchange carriers may recover their number portability costs in any manner consistent with applicable state and federal laws and regulations.

[FR Doc. 98–17076 Filed 6–26–98; 8:45 am]

BILLING CODE 6712–01–U

DEPARTMENT OF COMMERCE

National Oceanic and Atmospheric Administration

50 CFR Part 285

[I.D. 061898D]

Atlantic Tuna Fisheries; Atlantic Bluefin Tuna

AGENCY: National Marine Fisheries Service (NMFS), National Oceanic and Atmospheric Administration (NOAA), Commerce.

ACTION: Catch limit adjustment.

SUMMARY: NMFS adjusts the daily catch limit for the Angling category fishery for Atlantic bluefin tuna (BFT) in the southern area (Delaware and states south) to one fish per angler, with a maximum of three fish per vessel, from the school size class and one fish per vessel from the large school or small medium size class. The duration of the catch limit adjustment is limited to the period of June 26 through July 27, 1998, whereupon the limit will revert to one BFT from the school, large school, or small medium size class per vessel per day. This action is being taken to provide increased fishing opportunities in the southern area without risking overharvest of this category.

DATES: The daily catch limit adjustment is effective 1:00 a.m., local time, June 26, 1998, until 11:30 p.m., local time, July 27, 1998.

FOR FURTHER INFORMATION CONTACT: Pat Scida, 978–281–9260, or Sarah McLaughlin, 301–713–2347.

SUPPLEMENTARY INFORMATION: Regulations implemented under the authority of the Atlantic Tunas Convention Act (16 U.S.C. 971 *et seq.*) governing the harvest of BFT by persons and vessels subject to U.S. jurisdiction are found at 50 CFR part 285.

Implementing regulations for the Atlantic tuna fisheries at § 285.24 allow for adjustments to the daily catch limits in order to provide for maximum utilization of the quota spread over the longest possible period of time. The Assistant Administrator for Fisheries, NOAA, may increase or reduce the per angler catch limit for any size class BFT or may change the per angler limit to a per boat limit or a per boat limit to a per angler limit.

NMFS is responsible for implementing the International Commission for the Conservation of Atlantic Tunas recommendation to limit the annual catch of school bluefin to 8 percent by weight of the total annual domestic quota, i.e., 1,344 metric tons (mt). In addition, it is NMFS' goal to increase the geographical and temporal distribution of data collection and fishing opportunities for all fishermen in the Angling category.

Since January 1, 1998, NMFS has maintained the daily catch limit at one BFT per vessel to ensure that the southern area quota would not be exceeded and to provide increased fishing opportunities throughout the southern area. Preliminary estimates of southern area landings for January through May 1998 indicate that no more than 5 mt of school BFT (subquota of 51 mt), no more than 10 mt of large school/small medium BFT (subquota of 72 mt),

and approximately 2.3 mt of large medium/giant BFT (subquota of 5 mt) were landed. Updates to these estimates will be used to effect any further inseason adjustments as necessary. NMFS has determined that a catch limit adjustment is warranted to ensure reasonable fishing opportunities in all geographic areas without risking overharvest.

The daily catch limit for the southern area is adjusted as follows: No more than one BFT per angler, with a maximum of three fish per vessel, from the school size class may be retained each day per Angling category vessel. In addition, one BFT per vessel per day may be landed from the large school or small medium size class. This catch limit adjustment is effective June 26 through July 27, 1998, whereupon the catch limit will revert to one BFT from the school, large school, or small medium size class per vessel per day.

These catch limits have been selected based on catch rates for the 1997 fishing season. Therefore, NMFS will continue to monitor the Angling category fishery closely through the Automated Catch Reporting System and the Large Pelagic Survey. Depending on the level of fishing effort and catch rates of BFT, NMFS may determine that an interim closure or additional catch limit adjustment is necessary to enhance scientific data collection from all geographic areas. Closures or subsequent adjustments to the daily catch limit, if any, shall be announced through publication in the **Federal Register**. In addition, anglers may call the Atlantic Tunas Information Line at 888–USA-TUNA (888–872–8862), 301–713–1279, or 978–281–9305 for updates on quota monitoring and catch limit adjustments. Anglers aboard Charter/Headboat vessels, when engaged in recreational fishing for school, large school, and small medium BFT, are subject to the same rules as anglers aboard Angling category vessels. All BFT landed under the Angling category quota must be reported within 24 hours of landing to the NMFS Automated Catch Reporting System by phoning 888–USA-TUNA (888–872–8862), or in North Carolina, to a reporting station. For information about the North Carolina Harvest Tagging Program, including reporting station locations, call 800–338–7804.

Classification

This action is taken under 50 CFR 285.24(d)(3) and is exempt from review under E.O. 12866.

Authority: 16 U.S.C. 971 *et seq.*

Dated: June 23, 1998.

Gary C. Matlock,

Director, Office of Sustainable Fisheries, National Marine Fisheries Service.

[FR Doc. 98–17166 Filed 6–23–98; 5:02 pm]

BILLING CODE 3510–22–F

DEPARTMENT OF COMMERCE

National Oceanic and Atmospheric Administration

50 CFR Part 660

[Docket No. 980319068–8155–02; I.D. 021998A]

RIN 0648–AK59

Fisheries Off West Coast States and in the Western Pacific; Western Pacific Bottomfish Fishery; Fishing Moratorium

AGENCY: National Marine Fisheries Service (NMFS), National Oceanic and Atmospheric Administration (NOAA), Commerce.

ACTION: Final rule.

SUMMARY: NMFS is extending the current moratorium on harvesting seamount groundfish from the Hancock Seamount in the Northwestern Hawaiian Islands until August 31, 2004. The fishery has been under a moratorium since 1986. This action is being taken in response to a recommendation by the Western Pacific Fishery Management Council (Council), which heard reports from its Bottomfish Plan Team and Scientific and Statistical Committee that revealed that armorhead (*Pentaceros richardsoni*), an overfished seamount species, has not recovered. The intent of this action is to allow the protection provided for this resource to continue.

DATES: Effective September 1, 1998.

ADDRESSES: Request for information relevant to this action should be sent to William T. Hogarth, Administrator, Southwest Region, NMFS, 501 West Ocean Boulevard, Suite 4200, Long Beach, CA 90802.

FOR FURTHER INFORMATION CONTACT: James J. Morgan or Svein Fougner, Assistant Regional Administrator for Sustainable Fisheries, (562) 980–4030, or Al Katekaru, Pacific Islands Area Office, (808) 973–2985.

SUPPLEMENTARY INFORMATION: A proposed rule was published in the **Federal Register** on March 26, 1998 (63 FR 14675) requesting public comments on extending the moratorium on harvesting seamount groundfish from Hancock Seamount in the Northwestern Hawaiian Islands until August 31, 2004. There were no comments received during the public comment period ending May 11, 1998.

This resource was overfished by foreign vessels before the Magnuson Fishery Conservation and Management Act was implemented; it has never been the target of domestic fishermen. The original Fishery Management Plan for the Bottomfish and Seamount Groundfish Fisheries of the Western Pacific Region, implemented in 1986, established a moratorium on fishing for bottomfish and seamount groundfish (51 FR 27413, July 31, 1986). Periodic reviews of the stocks indicated that no recovery had occurred. Therefore, on August 17, 1992 (57 FR 36907), the moratorium was extended to August 31, 1998. Armorhead was listed as overfished in the September 1997 ''Report to Congress Status of Fisheries of the United States.''

The last U.S. research cruise of Hancock Seamount was conducted in 1993; however, the Japanese trawl fleet continues to harvest armorhead on neighboring seamounts outside the exclusive economic zone (EEZ). According to bottom trawl catch and effort statistics provided by the National Research Institute of the Far Seas Fisheries, the most current (1995) spawning potential ratio (SPR) for the armorhead stock is 1.8 percent at all seamounts outside the EEZ. These seamounts comprise 95 percent of the trawl grounds and 91 percent of the total historic seamount-wide catch in the Japanese trawl fishery. Based on the low SPR value, it is inferred that the status of the Hancock Seamount armorhead stock is similarly depressed and well under the current 20 percent SPR definition for an overfished stock.

At its April 21, 1997, meeting, the Council heard reports from its Bottomfish Plan Team and Scientific and Statistical Committee on the status of seamount groundfish resources. On the basis of those reports, and in accordance with the framework procedures at 50 CFR 660.67, the Council recommended that the moratorium be extended for at least another 6 years (i.e., August 31, 2004).

The Council recognizes that the stocks extend outside the EEZ and that the moratorium will not ensure recovery of the resource within the EEZ; however, the action is in accordance with U.S. responsibilities under the Magnuson-Stevens Fishery Conservation and Management Act. The Council also has taken action to convene a panel of international experts to explore possible international management of the Emperor and Hawaiian Ridge Seamount armorhead fishery under the aegis of the United Nations Agreement Relating to

Straddling Fish Stocks and Highly Migratory Fish Stocks.

Classification

This final rule has been determined to be not significant for purposes of E.O. 12866.

The Assistant General Counsel for Legislation and Regulation of the Department of Commerce certified to the Chief Counsel for Advocacy of the Small Business Administration that this rule, would not have a significant economic impact on a substantial number of small entities. No comments were received regarding this certification. As a result, a regulatory flexibility analysis was not prepared.

List of Subjects in 50 CFR Part 660

Administrative practice and procedure, American Samoa, Fisheries, Fishing, Guam, Hawaiian Natives, Indians, Northern Mariana Islands, Reporting and recordkeeping requirements.

Dated: June 23, 1998.

David L. Evans,

Deputy Assistant Administrator for Fisheries, National Marine Fisheries Service.

For the reasons set out in the preamble, 50 CFR part 660 is amended as follows:

PART 660—FISHERIES OFF WEST COAST STATES AND IN THE WESTERN PACIFIC

1. The authority citation for part 660 continues to read as follows:

Authority: 16 U.S.C. 1801 *et seq.*

2. Section 660.68 is revised to read as follows:

§ 660.68 Fishing moratorium on Hancock Seamount.

Fishing for bottomfish and seamount groundfish on the Hancock Seamount is prohibited through August 31, 2004.

[FR Doc. 98–17274 Filed 6–26–98; 8:45 am]

BILLING CODE 3510–22–F

Proposed Rules

Federal Register
Vol. 63, No. 124
Monday, June 29, 1998

This section of the FEDERAL REGISTER contains notices to the public of the proposed issuance of rules and regulations. The purpose of these notices is to give interested persons an opportunity to participate in the rule making prior to the adoption of the final rules.

DEPARTMENT OF AGRICULTURE

Agricultural Marketing Service

7 CFR Part 928

[Docket No. FV98–928–1 PR]

Papayas Grown in Hawaii; Increased Assessment Rate

AGENCY: Agricultural Marketing Service, USDA.

ACTION: Proposed rule.

SUMMARY: This rule would increase the assessment rate established for the Papaya Administrative Committee (Committee) under Marketing Order No. 928 for the 1998–99 and subsequent fiscal years from $0.0059 to $0.0063 per pound of papayas handled. The Committee is responsible for local administration of the marketing order which regulates the handling of papayas grown in Hawaii. Authorization to assess papaya handlers enables the Committee to incur expenses that are reasonable and necessary to administer the program. The fiscal year begins July 1 and ends June 30. The assessment rate would remain in effect indefinitely unless modified, suspended, or terminated.

DATES: Comments must be received by July 29, 1998.

ADDRESSES: Interested persons are invited to submit written comments concerning this rule. Comments must be sent to the Docket Clerk, Fruit and Vegetable Programs, AMS, USDA, room 2525–S, P.O. Box 96456, Washington, DC 20090–6456; Fax: (202) 205–6632. Comments should reference the docket number and the date and page number of this issue of the **Federal Register** and will be available for public inspection in the Office of the Docket Clerk during regular business hours.

FOR FURTHER INFORMATION CONTACT: Diane Purvis, Marketing Assistant, and Terry Vawter, Marketing Specialist, California Marketing Field Office, Fruit and Vegetable Programs, AMS, USDA, 2202 Monterey Street, Suite 102B, Fresno, California 93721; telephone: (209) 487–5901, Fax: (209) 487–5906; or George Kelhart, Technical Advisor, Marketing Order Administration Branch, Fruit and Vegetable Programs, AMS, USDA, room 2525-S, P.O. Box 96456, Washington, DC 20090–6456; telephone: (202) 720–2491, Fax: (202) 205–6632. Small businesses may request information on compliance with this regulation by contacting Jay Guerber, Marketing Order Administration Branch, Fruit and Vegetable Programs, AMS, USDA, room 2525–S, P.O. Box 96456, Washington, DC 20090–6456; telephone: (202) 720–2491, Fax: (202) 205–6632.

SUPPLEMENTARY INFORMATION: This rule is issued under Marketing Agreement No. 155 and Order No. 928, both as amended (7 CFR part 928), regulating the handling of papayas grown in Hawaii, hereinafter referred to as the ''order.'' The marketing agreement and order are effective under the Agricultural Marketing Agreement Act of 1937, as amended (7 U.S.C. 601–674), hereinafter referred to as the ''Act.''

The Department of Agriculture (Department) is issuing this rule in conformance with Executive Order 12866.

This rule has been reviewed under Executive Order 12988, Civil Justice Reform. Under the marketing order now in effect, papaya handlers are subject to assessments. Funds to administer the order are derived from such assessments. It is intended that the assessment rate as issued herein will be applicable to all assessable papayas beginning on July 1, 1998, and continue until amended, suspended, or terminated. This rule will not preempt any State or local laws, regulations, or policies, unless they present an irreconcilable conflict with this rule.

The Act provides that administrative proceedings must be exhausted before parties may file suit in court. Under section 608c(15)(A) of the Act, any handler subject to an order may file with the Secretary a petition stating that the order, any provision of the order, or any obligation imposed in connection with the order is not in accordance with law and request a modification of the order or to be exempted therefrom. Such handler is afforded the opportunity for a hearing on the petition. After the hearing the Secretary would rule on the petition. The Act provides that the district court of the United States in any district in which the handler is an inhabitant, or has his or her principal place of business, has jurisdiction to review the Secretary's ruling on the petition, provided an action is filed not later than 20 days after the date of the entry of the ruling.

This rule would increase the assessment rate established for the Committee for the 1998–99 and subsequent fiscal years from $0.0059 per pound to $0.0063 per pound of papayas handled.

The papaya marketing order provides authority for the Committee, with the approval of the Department, to formulate an annual budget of expenses and collect assessments from handlers to administer the program. The members of the Committee are producers and handlers of papayas. They are familiar with the Committee's needs and with the costs for goods and services in their local area and are thus in a position to formulate an appropriate budget and assessment rate. The assessment rate is formulated and discussed in a public meeting. Thus, all directly affected persons have an opportunity to participate and provide input.

For the 1996–97 and subsequent fiscal years, the Committee recommended, and the Department approved, an assessment rate that would continue in effect from fiscal year to fiscal year unless modified, suspended, or terminated by the Secretary upon recommendation and information submitted by the Committee or other information available to the Secretary.

The Committee met on May 7, 1998, and recommended 1998–99 expenditures of $561,500 and an assessment rate of $0.0063 per pound of papayas. In comparison, last year's budgeted expenditures were $623,000. The assessment rate of $0.0063 per pound is $0.0004 higher than the rate currently in effect. The Committee determined that the present assessment rate would be inadequate to fund its anticipated expenses and maintain a sufficient reserve fund for the 1998–99 fiscal year. The Committee is authorized to maintain an operating reserve in an amount not to exceed approximately one fiscal year's operational expenses. Last year, the reserve fund was $110,000. At the end of the 1998–99 fiscal year the operating reserve is

expected to be $25,200, which is considered adequate by the Committee. After consideration of anticipated expenses for the 1998–99 fiscal year, it was determined that assessment income, interest, and income from other sources would provide sufficient funds to meet anticipated expenses and maintain an adequate reserve fund.

The major expenditures recommended by the Committee for the 1998–99 fiscal year include $183,000 for marketing and promotion, $171,500 for research and development, and $98,000 for salaries. Budgeted expenses for these items in 1997–98 were $200,000 for marketing and promotion, $225,000 for research and development, and $81,000 for salaries, respectively.

The assessment rate recommended by the Committee was derived by dividing assessment income needed by expected shipments of papayas. Papaya shipments for 1998–99 are estimated at 38 million pounds which should provide $239,400 in assessment income. Income derived from handler assessments, when combined with income from the Hawaii Department of Agriculture, State of Hawaii (Research), USDA's Foreign Agricultural Service, County of Hawaii, and the Japanese Inspection program, along with interest income and $84,800 from the Committee's authorized reserve, will be adequate to cover budgeted expenses. Funds in the reserve (estimated to be $25,200 at the end of the 1998–99 fiscal year) would be kept within the maximum permitted in § 928.42(a)(2) of the order. The order authorizes approximately one fiscal year's expenses for the reserve.

The proposed assessment rate would continue in effect indefinitely unless modified, suspended, or terminated by the Secretary upon recommendation and information submitted by the Committee or other available information.

Although this assessment rate would be in effect for an indefinite period, the Committee would continue to meet prior to or during each fiscal year to recommend a budget of expenses and consider recommendations for modification of the assessment rate. The dates and times of Committee meetings are available from the Committee or the Department. Committee meetings are open to the public and interested persons are encouraged to express their views at these meetings. The Department would evaluate Committee recommendations and other available information to determine whether modification of the assessment rate is needed. Further rulemaking would be undertaken as necessary. The Committee's 1998–99 budget and those for subsequent fiscal years would be reviewed and, as appropriate, approved by the Department.

Pursuant to requirements set forth in the Regulatory Flexibility Act (RFA), the Agricultural Marketing Service (AMS) has considered the economic impact of this rule on small entities. Accordingly, AMS has prepared this initial regulatory flexibility analysis.

The purpose of the RFA is to fit regulatory actions to the scale of business subject to such actions in order that small businesses will not be unduly or disproportionately burdened. Marketing orders issued pursuant to the Act, and the rules issued thereunder, are unique in that they are brought about through group action of essentially small entities acting on their own behalf. Thus, both statutes have small entity orientation and compatibility.

There are approximately 400 producers of papayas in the production area and approximately 60 handlers subject to regulation under the marketing order. Small agricultural producers have been defined by the Small Business Administration (13 CFR 121.601) as those having annual receipts less than $500,000, and small agricultural service firms are defined as those whose annual receipts are less than $5,000,000.

Last year, as a percentage, four handlers each shipped in excess of 3.85 million pounds of papayas, and the remaining handlers each shipped less than 3.85 million pounds of papayas. Using an average f.o.b. price of $1.30 per pound, the four handlers shipping in excess of 3.85 million pounds of papayas each could be considered large businesses and the remaining handlers could thus be considered small businesses under SBA's definition. Using an average grower price of $0.45 per pound and industry shipments of 36 million pounds, grower revenues would be $16.2 million. Average revenue per grower would thus be $40,500. Based on the foregoing, the majority of handlers and producers of papayas may be classified as small entities.

This rule would increase the assessment rate established for the Committee and collected from handlers for the 1998–99 and subsequent fiscal years from $0.0059 per pound to $0.0063 per pound of papayas handled. The Committee recommended 1998–99 expenditures of $561,500 and an assessment rate of $0.0063 per pound of papayas handled. The proposed assessment rate of $0.0063 per pound is $0.0004 higher than the 1997–98 rate. The quantity of assessable papayas for the 1998–99 fiscal year is estimated at 38 million pounds. Thus, the $0.0063 rate should provide $239,400 in assessment income. Income derived from handler assessments, the Hawaii Department of Agriculture, State of Hawaii (Research), USDA's Foreign Agricultural Service, County of Hawaii, and Japanese Inspection program, along with interest income and $84,800 from the Committee's authorized reserve, will be adequate to cover budgeted expenses. Funds in the reserve (estimated to be $25,200 at the end of the 1998–99 fiscal year) would be kept within the maximum permitted in § 928.42(a)(2) of the order. The order authorizes approximately one fiscal year's expenses for the reserve.

The Committee recommended 1998–99 expenditures of $561,500 which include decreases in marketing and promotion, and research and development programs. The Committee discussed further decreases in these budget categories to avoid increasing the assessment rate, but it decided that the programs should be funded at the recommended levels. Salary increases were budgeted to cover the costs of a new employee. The assessment rate of $0.0063 per pound of assessable papayas was determined by dividing the assessment income needed by the quantity of assessable papayas, estimated at 38 million pounds for the 1998–99 fiscal year. This estimate would generate $239,400 in assessment income. When combined with $237,300 in anticipated income from other sources including $84,800 from the reserve, the Committee would have adequate funds to meet 1998–99 expenses.

A review of historical information and preliminary information pertaining to the upcoming fiscal year indicates that the grower price for the 1998–99 season could range between $.30 and $0.45 per pound of papayas. Therefore, the estimated assessment revenue for the 1998–99 fiscal year as a percentage of total grower revenue could range between 1.4 and 2.1 percent.

This action would increase the assessment obligation imposed on handlers. While assessments impose some additional costs on handlers, the costs are minimal and uniform on all handlers. Some of the additional costs may be passed on to producers. However, these costs would be offset by the benefits derived by the operation of the marketing order. In addition, the Committee's meeting was widely publicized throughout the papaya industry, and all interested persons were invited to attend the meeting and participate in Committee deliberations on all issues. Like all Committee

meetings, the May 7, 1998, meeting was a public meeting and all entities, both large and small, were able to express views on this issue. Finally, interested persons are invited to submit information on the regulatory and informational impacts of this action on small businesses.

This proposed rule would impose no additional reporting or recordkeeping requirements on either small or large papaya handlers. As with all Federal marketing order programs, reports and forms are periodically reviewed to reduce information requirements and duplication by industry and public sector agencies.

The Department has not identified any relevant Federal rules that duplicate, overlap, or conflict with this rule.

A 30-day comment period is provided to allow interested persons to respond to this proposed rule. Thirty days is deemed appropriate because: (1) The Committee needs to have sufficient funds to pay its expenses which are incurred on a continuous basis; (2) the 1998–99 fiscal year begins on July 1, 1998, and the marketing order requires that the rate of assessment for each fiscal year apply to all assessable papayas handled during such fiscal year; and (3) handlers are aware of this action which was recommended by the Committee at a public meeting and is similar to other assessment rate actions issued in past years.

List of Subjects in 7 CFR Part 928

Marketing agreements, Papayas, Reporting and recordkeeping requirements.

For the reasons set forth in the preamble, 7 CFR part 928 is proposed to be amended as follows:

PART 928—PAPAYAS GROWN IN HAWAII

1. The authority citation for 7 CFR part 928 continues to read as follows:

Authority: 7 U.S.C. 601–674.

2. Section 928.226 is proposed to be revised to read as follows:

§ 928.226 Assessment rate.

On and after July 1, 1998, an assessment rate of $0.0063 per pound is established for papayas grown in Hawaii.

Dated: June 23, 1998.

Robert C. Keeney,

Deputy Administrator, Fruit and Vegetable Programs.

[FR Doc. 98–17251 Filed 6–26–98; 8:45 am]

BILLING CODE 3410–02–P

DEPARTMENT OF TRANSPORTATION

Federal Aviation Administration

14 CFR Part 71

[Airspace Docket No. 98–ACE–21]

Proposed Establishment of Class E Airspace; Davenport, LA

AGENCY: Federal Aviation Administration (FAA), DOT.

ACTION: Notice of proposed rulemaking.

SUMMARY: This document proposes to establish Class E airspace area at Davenport Municipal Airport, Davenport, IA. The FAA has received a request to establish Class E surface area at Davenport, IA. The commissioning of the Davenport Automated Surface Observation System (ASOS) qualifies the Davenport Municipal Airport for a Class E surface area. The intended effect of this action is to establish controlled airspace for instrument operations at the Davenport Municipal Airport.

DATES: Comments must be received on or before July 20, 1998.

ADDRESSES: Send comments on the proposal in triplicate to: Manager, Airspace Branch, ACE–520, Federal Aviation Administration, Docket No. 98–ACE–21, 601 East 12th Street, Kansas City, MO 64106.

The official docket may be examined in the Office of Regional Counsel for the Central Region at the same address between 9:00 a.m. and 3:00 p.m., Monday through Friday, except Federal holidays.

An informal docket may also be examined during normal business hours in the office of the Manager, Airspace Branch, Air Traffic Division, at the address listed above.

FOR FURTHER INFORMATION CONTACT: Kathy Randolph, Air Traffic Division, Airspace Branch, ACE–520C, Federal Aviation Administration, 601 East 12th Street, Kansas City, Missouri 64106; telephone number: (816) 426–3408.

SUPPLEMENTARY INFORMATION:

Comments Invited

Interested parties are invited to participate in this proposed rulemaking by submitting such written data, views, or arguments as they may desire. Comments that provide the factual basis supporting the views and suggestions presented are particularly helpful in developing reasoned regulatory decisions on the proposal. Comments are specifically invited on the overall regulatory, economic, environmental, and energy-related aspects of the proposal. Communications should identify the airspace docket number and be submitted in triplicate to the address listed above. Commenters wishing the FAA to acknowledge receipt of their comments on this notice must submit with those comments a self-addressed, stamped postcard on which the following statement is made: ''Comments to Airspace Docket No. 98–ACE–21.'' The postcard will be date/time stamped and returned to the commenter. All communications received on or before the closing date for comments will be considered before taking action on the proposed rule. The proposal contained in this notice may be changed in light of comments received. All comments submitted will be available for examination in the Rules Docket both before and after the closing date for comments. A report summarizing each substantive public contact with FAA personnel concerned with this rulemaking will be filed in the docket.

Availability of NPRMs

Any person may obtain a copy of this Notice of Proposed Rulemaking (NPRM) by submitting a request to the Federal Aviation Administration, Office of Public Affairs, Attention: Public Inquiry Center, APA–230, 800 Independence Avenue, SW, Washington, DC 20591, or by calling (202) 267–3484. Communications must identify the notice number of this NPRM. Persons interested in being placed on a mailing list for future NPRMs should also request a copy of Advisory Circular No. 11–2A, which describes the procedures.

The Proposal

The FAA is considering an amendment to 14 CFR part 71 to establish Class E surface airspace area at Davenport, IA. The FAA has received a request to establish a Class E surface area. Commissioning of the ASOS qualifies the Davenport Municipal Airport for a Class E surface area. The intended effect of this action is to provide segregation of aircraft operating under Instrument Flight Rules (IFR) from aircraft operating in visual weather conditions. The area would be depicted on appropriate aeronautical charts thereby enabling pilots to circumnavigate the area or otherwise comply with IFR procedures. Class E airspace areas designated as a surface area for an airport are published in paragraph 6002 of FAA Order 7400.9E, dated September 10, 1997, and effective September 16, 1997, which is incorporated by reference in 14 CFR 71.1. The Class E airspace designation listed in this document would be published subsequently in the Order.

The FAA has determined that this proposed regulation only involves an established body of technical regulations for which frequent and routine amendments are necessary to keep them operationally current. Therefore, this proposed regulation (1) is not a ''significant regulatory action'' under Executive Order 12866; (2) is not a ''significant rule'' under DOT Regulatory Policies and Procedures (44 FR 11034; February 26, 1979); and (3) does not warrant preparation of a Regulatory Evaluation as the anticipated impact is so minimal. Since this is a routine matter that will only affect air traffic procedures and air navigation, it is certified that this proposed rule will not have a significant economic impact on a substantial number of small entities under the criteria of the Regulatory Flexibility Act.

List of Subjects in 14 CFR Part 71

Airspace, Incorporation by reference, Navigation (air).

The Proposed Amendment

Accordingly, pursuant to the authority delegated to me, the Federal Aviation Administration proposes to amend 14 CFR part 71 as follows:

PART 71—DESIGNATION OF CLASS A, CLASS B, CLASS C, CLASS D, AND CLASS E AIRSPACE AREAS; AIRWAYS; ROUTES; AND REPORTING POINTS

1. The authority citation for part 71 continues to read as follows:

Authority: 49 U.S.C. 106(g), 40103, 40113, 40120; E.O. 10854, 24 FR 9565, 3 CFR, 1959–1963 Comp., p. 389.

§ 71.1 [Amended]

2. The incorporation by reference in 14 CFR 71.1 of Federal Aviation Administration Order 7400.9E, Airspace Designations and Reporting Points, dated September 10, 1997, and effective September 16, 1997, is amended as follows:

Paragraph 6002 Class E airspace areas designated as a surface area for an airport

* * * * *

ACE IA E5 Davenport, IA [New]

Davenport Municipal Airport, IA
(Lat. 41°36′38″ N., long. 90°35′19″ W.)

Within a 4.1-mile radius of the Davenport Municipal Airport, This Class E airspace is effective during the specific dates and times established in advance by a Notice to Airmen. The effective date and time will thereafter be continuously published in the Airport/Facility Directory.

* * * * *

Issued in Kansas City, MO, on June 4, 1998.

Christopher R. Blum,

Acting Manager, Air Traffic Division, Central Region.

[FR Doc. 98–17224 Filed 6–26–98; 8:45 am]

BILLING CODE 4910–13–M

ENVIRONMENTAL PROTECTION AGENCY

40 CFR Part 52

[IL85–1b; FRL–6115–8]

Approval and Promulgation of State Implementation Plan; Indiana

AGENCY: Environmental Protection Agency (EPA).

ACTION: Proposed rule.

SUMMARY: EPA is proposing to approve an Indiana State Implementation Plan (SIP) revision request, dated July 24, 1997, submitted to EPA to complete requirements for record keeping and reporting requirements and other related requirements for the control of Volatile Organic Compound (VOC) emissions from graphic arts sources. In the final rules section of this **Federal Register**, the EPA is approving the State's request as a direct final rule without prior proposal because EPA views this action as noncontroversial and anticipates no adverse comments. A detailed rationale for the State's request is set forth in the direct final rule. The direct final rule will become effective without further notice unless the EPA receives relevant adverse written comment on this proposed rule. Should the EPA receive such comment, it will publish a final rule informing the public that the direct final rule did not take effect and such public comment received will be addressed in a subsequent final rule based on this proposed rule. If no adverse written comments are received, the direct final rule will take effect on the date stated in that document and no further activity will be taken on this proposed rule. EPA does not plan to institute a second comment period on this action. Any parties interested in commenting on this action should do so at this time.

DATES: Written comments on this proposed rule must be received on or before July 29, 1998.

ADDRESSES: Written comments should be mailed to: J. Elmer Bortzer, Chief, Regulation Development Section, Air Programs Branch (AR–18J), Environmental Protection Agency, Region 5, 77 West Jackson Boulevard, Chicago, Illinois 60604.

Copies of the State submittal are available for inspection at: Regulation Development Section, Air Programs Branch (AR–18J), Environmental Protection Agency, Region 5, 77 West Jackson Boulevard, Chicago, Illinois 60604.

FOR FURTHER INFORMATION CONTACT: Edward Doty, Environmental Scientist, Regulation Development Section, Air Programs Branch (AR–18J), Environmental Protection Agency, Region 5, 77 West Jackson Boulevard, Chicago, Illinois 60604, (312) 886 6057.

SUPPLEMENTARY INFORMATION: For additional information, see the direct final rule published in the final rules section of this **Federal Register**.

Dated: June 2, 1998.

David A. Ulrich,

Acting Regional Administrator, Region V.

[FR Doc. 98–17121 Filed 6–26–98; 8:45 am]

BILLING CODE 6560–50–P

ENVIRONMENTAL PROTECTION AGENCY

40 CFR Part 52

[PA–4071b; FRL–6104–5]

Approval and Promulgation of Air Quality Implementation Plans; Pennsylvania; Approval of VOC RACT Determinations for Individual Sources

AGENCY: Environmental Protection Agency (EPA).

ACTION: Proposed rule.

SUMMARY: EPA proposes to approve the State Implementation Plan (SIP) revision submitted by the Commonwealth of Pennsylvania for the purpose of establishing volatile organic compound (VOC) and nitrogen oxides (NO_X) reasonably available control technology (RACT) for eight (8) major sources located in Pennsylvania. In the Final Rules section of this **Federal Register**, EPA is approving the Commonwealth's SIP revision as a direct final rule without prior proposal because the Agency views this as a noncontroversial SIP revision and anticipates no adverse comments. A detailed rationale for the approval is set forth in the direct final rule and the accompanying technical support document. If no adverse comments are received in response to this proposed rule, no further activity is contemplated in relation to this rule. If EPA receives adverse comments, the direct final rule will be withdrawn and all public comments received will be addressed in a subsequent final rule based on this proposed rule. EPA will not institute a

second comment period on this action. Any parties interested in commenting on this action should do so at this time. If adverse comments are received that do not pertain to all documents subject to this rulemaking action, those documents not affected by the adverse comments will be finalized in the manner described here. Only those documents that receive adverse comments will be withdrawn in the manner described here.

DATES: Comments must be received in writing by July 29, 1998.

ADDRESSES: Written comments on this action should be addressed to David Campbell, Air Protection Division, Mailcode 3AP11, U.S. Environmental Protection Agency, Region III, 841 Chestnut Building, Philadelphia, Pennsylvania 19107. Copies of the documents relevant to this action are available for public inspection during normal business hours at the Air Protection Division, U.S. Environmental Protection Agency, Region III, 841 Chestnut Building, Philadelphia, Pennsylvania 19107; and the Pennsylvania Department of Environmental Protection, Bureau of Air Quality Control, P.O. Box 8468, 400 Market Street, Harrisburg, Pennsylvania 17105.

FOR FURTHER INFORMATION CONTACT: David Campbell, (215) 566–2196, at the EPA Region III office or via e-mail at campbell.dave@epamail.epa.gov. While information may be requested via e-mail, comments must be submitted in writing to the above Region III address.

SUPPLEMENTARY INFORMATION: See the information pertaining to this action, VOC RACT determinations for individual sources located in Pennsylvania, provided in the Direct Final action of the same title which is located in the Rules and Regulations section of this **Federal Register**.

Authority: 42 U.S.C. 7401–7671q.

Dated: May 13, 1998.

William Wisniewski,

Acting Regional Administrator, Region III.

[FR Doc. 98–17118 Filed 6–26–98; 8:45 am]

BILLING CODE 6560–50–P

FEDERAL COMMUNICATIONS COMMISSION

47 CFR Ch. I

[CC Docket No. 98–94; FCC 98–118]

Testing New Technologies

AGENCY: Federal Communications Commission.

ACTION: Notice of inquiry.

SUMMARY: On June 11, 1998, the Federal Communications Commission released a Notice of Inquiry to solicit public comment about the effects of existing Title II regulations on experiments involving advanced telecommunications technology conducted by firms subject to those regulations. The document, part of the Commission's 1998 biennial regulatory review, seeks comment about various initiatives the Commission could undertake in order to promote technology testing, including use of the Commission's biennial review power to repeal or modify regulations, and, alternatively, use of the Commission's authority to forbear from applying certain statutory provisions and Commission rules.

DATES: Comments are due on or before July 21, 1998. Reply comments are due on or before August 5, 1998.

ADDRESSES: Comments and reply comments should be sent to the Office of the Secretary, Federal Communications Commission, 1919 M Street, NW, Suite 222, Washington, DC 20554, with a copy to Scott Bergmann of the Common Carrier Bureau, Federal Communications Commission, 2033 M Street, NW, Suite 500, Washington, DC 20554. Parties should also file one copy of any documents filed in this docket with the Commission's copy contractor, International Transcription Services, Inc. (ITS), 1231 20th St., NW, Washington, DC 20036, (202) 857–3800.

FOR FURTHER INFORMATION CONTACT: Thomas J. Beers, Deputy Chief of the Industry Analysis Division, Common Carrier Bureau, at (202) 418–0952, or Scott K. Bergmann, Industry Analysis Division, Common Carrier Bureau, at (202) 418–7102.

SUPPLEMENTARY INFORMATION: This is a summary of the Commission's Notice of Inquiry released June 11, 1998 (FCC 98–118). The full text of this Notice of Inquiry is available for inspection and copying during normal business hours in the FCC Reference Center, Room 239, 1919 M Street, Washington, DC 20554. The complete text also may be purchased from the Commission's copy contractor, International Transcription Service, Inc. (202) 857–3800, 1231 20th St., NW, Washington, DC 20036.

Summary of the Public Notice

1. In the Notice of Inquiry (Notice), the Commission solicits public comment about the effects of its existing Title II regulations on experiments involving advanced telecommunications technology conducted by firms subject to these regulations. The inquiry is based on the Commission's belief that experiments involving new technology, including technical trials and market trials, are a critical step in the process of introducing new services that benefit the public. The Commission seeks to ensure that its regulation does not unnecessarily discourage applicants from conducting experiments involving new technology and new applications of existing technology. The Commission seeks comment on ways in which it may redesign its regulation in order to encourage and facilitate such tests.

2. Section 7 of the Communications Act of 1934, as amended (the Communications Act or the Act), states that it is ''the policy of the United States to encourage the provision of new technologies and services to the public.'' More recently, Congress reinforced section 7 by adding section 706 of the Telecommunications Act of 1996. Section 706(a) encourages the deployment of advanced telecommunications services by directing the Commission to ''encourage the deployment on a reasonable and timely basis of advanced telecommunications capability to all Americans * * * by utilizing, in a manner consistent with the public interest, convenience, and necessity, price cap regulation, regulatory forbearance, measures that promote competition in the local telecommunications market, or other regulating methods that remove barriers to infrastructure investment.'' Pursuant to these congressional directives, the Notice seeks public comment about a broad range of issues relating to the Commission's regulation of technology testing.

3. Pursuant to new section 11, Congress has required the Commission to conduct a biennial review of regulations that apply to operations or activities of any provider of telecommunications service and to repeal or modify any regulation it determines to be ''no longer necessary in the public interest.'' Accordingly, the Commission has begun a comprehensive 1998 biennial review of telecommunications and other regulations to promote ''meaningful deregulation and streamlining where competition or other considerations warrant such action.'' The Notice is thus undertaken in conjunction with the Commission's 1998 biennial regulatory review and in it the Commission asks, *inter alia,* whether and how the Commission can apply its section 11 deregulatory and streamlining mandate to remove or restructure existing regulations in order to promote technology testing.

4. Alternatively, the Commission asks in the Notice whether it should and can

use its new forbearance authority to accomplish the same goal. New section 10 of the Communications Act requires the Commission to forbear from applying sections of the Act and its regulations to carriers and services upon satisfying a stated three-part test. Telecommunications carriers and classes of telecommunications carriers may file applications seeking such forbearance treatment. The Notice seeks comment on whether the Commission should undertake specific efforts to encourage or promote such forbearance applications relating to technology testing or, alternatively, should define a class of experimental services that would qualify for forbearance treatment.

5. The Commission does not, however, limit the record of this proceeding to those alternatives. Rather, the Commission encourages commenters to offer any and all relevant and helpful suggestions to promote technology testing by regulated companies. Well-considered proposals to eliminate or streamline regulations governing technology testing would further the Commission's on-going pro-competition and pro-consumer regulatory mandate. In the last few decades, the telecommunications industry has experienced radical changes in its technologies, services, and markets. In response to these changes, the Commission has increasingly adopted policies that reflect the view that open entry and competition bring greater benefits to consumers and society than traditional regulation of markets dominated by one or a few carriers. Moreover, Congress in the 1996 Act has advanced this trend by aggressively promoting a new, competition-driven marketplace. New technologies and new applications of existing technologies will be critical in ensuring that the United States benefits from the competitive opportunities they will foster.

6. The Commission seeks comment about the effect of its regulation on experiments involving new technology and on whether affirmative steps are necessary to further encourage and facilitate testing by removing regulatory barriers to such testing. The Commission believes that its regulatory processes should not unduly impede experiments in new technology, and asks commenters in this proceeding to discuss fully how current Commission regulatory practices might tend to promote or frustrate necessary and desirable technology testing. To this end, the Notice asks commenters to address comprehensively those requirements currently imposed pursuant to the Act, including all relevant Commission rules and requirements, on those firms seeking to conduct experiments.

7. For example, under current requirements, depending on the nature of the technology or service to be tested, a firm seeking to conduct technical or market trials might be required to obtain several different approvals, including, *e.g.*, a tariff authorization under section 203, a certificate under section 214, approvals of Comparably Efficient Interconnection (CEI) and Open Network Architecture (ONA) plans under the Computer III rules, a developmental or experimental radio license, as well as, in specific cases, waivers of various Commission rules. All of these rule requirements serve legitimate and, indeed, compelling regulatory ends under certain circumstances. Tariff requirements, for example, are one way to help ensure that ratepayers pay just and reasonable rates and do not suffer from unlawful discrimination. CEI and ONA plans help ensure that carriers do not prefer their own enhanced service operations to the detriment of competitive enhanced service providers. Radio licensing, *inter alia*, prevents radio frequency interference caused by and to co-channel and adjacent channel service providers. The Commission seeks comment regarding whether any existing rule requirements in these areas can be relaxed or avoided in the context of short-term experimental testing of new technology and new applications of existing technology.

8. The Commission asks commenters to develop a specific record on how, from planning and regulatory perspectives, firms engage in experiments, including both technical trials and market trials of services using new technology. For example, commenters should indicate whether carriers must have particular authorizations in place prior to conducting technical or market trials of a service, or whether such authorization is only required prior to the commercial offering of a service. The Commission also seeks comment on the extent to which non-carriers, *i.e.*, equipment manufacturers or vendors, are responsible for technology testing and the extent to which these non-carriers are subject to any of the Commission's requirements in their testing of new technologies.

9. Based on the inquiry described above, the Commission may determine that certain of its common carrier regulations impede testing and experimentation with new technologies and new applications of existing technologies. For that reason, the Commission explores possible alternative approaches to encourage and facilitate technology experiments, namely, using section 11(b) to create streamlined authorization procedures (based on current Part 5 procedures governing wireless test applications) and applying regulatory forbearance under section 10 of the Act to ''carve out'' exceptional treatment for qualified tests. By suggesting these alternatives the Commission does not preclude discussion of others, and encourages commenters to offer any and all relevant and helpful suggestions. The Commission seeks specific comment on the ramifications of allowing technology testing to be conducted through market trials, *i.e.*, trials in which customers pay to obtain the service being tested. The Commission thinks that such market trials can be a useful way to develop ''real world'' information that is relevant to the introduction of new technology. At the same time, the Commission will in every case take steps to ensure that customers—including ratepayers of regulated carriers—do not improperly subsidize technology testing, and the Commission solicits comment on ways to ensure that the costs of such trials continue to be borne by shareholders.

II. Procedural Matters

A. Ex Parte Presentations

10. Pursuant to § 1.1204(b)(1) of the Commission's rules, the proceeding is exempt from the prohibitions and restrictions in the ex parte requirements.

B. Comment Filing Procedures

11. *General.* Pursuant to applicable procedures set forth in §§ 1.415 and 1.419 of the Commission's rules, 47 CFR 1.415, 1.419, interested parties shall file comments not later than July 21, 1998, and reply comments not later than August 5, 1998. To file formally in the proceeding, you must file an original and six copies of all comments, reply comments, and supporting comments. If you want each Commissioner to receive a personal copy of your comments, you must file an original and twelve copies. Comments and reply comments should be sent to the Secretary, Federal Communications Commission, 1919 M Street, NW, Room 222, Washington, DC 20554, with copies to: Thomas J. Beers, Common Carrier Bureau, Industry Analysis Division, 2033 M Street, NW, Room 500, Washington, DC 20554; Scott K. Bergmann, Common Carrier Bureau, Industry Analysis Division, 2033 M Street, NW, Room 500, Washington, DC 20554. Parties should file one copy of any documents filed in this docket with the Commission's copy contractor,

International Transcription Services, Inc., 2100 M Street, NW, Suite 140, Washington, DC 20037. Comments and reply comments will be available for public inspection during regular business hours in the FCC Reference Center, 1919 M Street, NW, Room 239, Washington, DC 20554.

12. *Other requirements.* Comments and reply comments must also comply with § 1.49 and all other applicable sections of the Commission's rules. We also direct all interested parties to include the name of the filing party and the date of the filing on each page of their comments and reply comments.

13. Commenters may also file informal comments or an exact copy of formal comments electronically via the Internet at: <http:dettifoss.fcc.gov:8080/cgi-bin/ws.exe/beta/ecfs/upload.hts>. Only one copy of electronically filed comments must be submitted. Commenters must note on the subject line whether an electronic submission is an exact copy of formal comments. Commenters also must include their full name and U.S. Postal Service mailing address in their submissions. Further information on the process of submitting comments electronically is available at that location and at <http://www.fcc.gov/e-file>.

14. Parties are also asked to submit comments and reply comments on diskette. Such diskette submissions would be in addition to and not a substitute for the formal filing requirements addressed above. Parties submitting diskettes should submit them to: Ms. Terry Conway, Common Carrier Bureau, Industry Analysis Division, 2033 M Street, NW, Room 500, Washington, DC 20554. Such diskettes should be on a 3.5 inch diskette formatted in an IBM compatible format using WordPerfect 5.1 for Windows software. The diskette should be submitted in ''read only'' mode. The diskette should be clearly labeled with the party's name, proceeding, type of pleading (comment or reply comments) and date of submission. The diskette should be accompanied by a cover letter.

III. Ordering Clauses

15. Accordingly, *it is ordered*, pursuant to sections 1, 4(i), 7, 10, 11, 218 and 403 of the Communications Act of 1934, as amended, 47 U.S.C. sections 151, 154(i), 157, 160, 161, 218, 403, that notice is hereby given of the inquiry described above and that comment is sought on these issues.

Federal Communications Commission.

Magalie Roman Salas,

Secretary.

[FR Doc. 98–17079 Filed 6–26–98; 8:45 am]

BILLING CODE 6712–01–P

DEPARTMENT OF TRANSPORTATION

National Highway Traffic Safety Administration

49 CFR Part 572

[Docket No. NHTSA–98–3972]

RIN 2127–AG76

Anthropomorphic Test Dummy; Occupant Crash Protection

AGENCY: National Highway Traffic Safety Administration (NHTSA), Department of Transportation.

ACTION: Notice of proposed rulemaking.

SUMMARY: This document proposes to amend 49 CFR part 572 by adding design and performance specifications for a new, more advanced 6-year-old child dummy. The agency believes that the new dummy, part of the family of Hybrid III test dummies, is more representative of humans than the existing 6-year-old child dummy specified by the agency, and allows the assessment of more types of potential injuries. The new dummy is especially needed to evaluate the effects of air bag deployment on children, but would also provide greater and more useful information in a variety of environments to better evaluate child safety. Adding the dummy to part 572 would be the first step toward using the dummy to evaluate the safety of air bags for children. The issue of specifying use of the dummy in determining compliance with performance test requirements, e.g., as part of the agency's occupant protection standard and/or child restraint standard, will be addressed in future rulemakings.

DATES: Comments must be received by September 28, 1998.

ADDRESSES: Comments should refer to the docket number, and be submitted to: Docket Management, Room PL–401, 400 Seventh Street, S.W., Washington, D.C. 20590 (Docket hours are from 10 a.m. to 5 p.m.).

FOR FURTHER INFORMATION CONTACT: For nonlegal issues: Stan Backaitis, Office of Crashworthiness Standards (telephone: 202–366–4912). For legal issues: Edward Glancy, Office of the Chief Counsel (202–366–2992). Both can be reached at the National Highway Traffic Safety Administration, 400 Seventh St., S.W., Washington, D.C. 20590.

SUPPLEMENTARY INFORMATION:

On November 14, 1991, NHTSA published in the **Federal Register** (56 FR 57830) a final rule establishing specifications and performance criteria for a test dummy representing a 6-year-old child. The specifications and performance criteria were set forth as subpart I of 49 CFR part 572. The agency explained that adding the subpart I 6-year-old child dummy to part 572 was a possible first step toward using the dummy to test the compliance of booster seats and other types of child restraint systems as part of Safety Standard No. 213, *Child Restraint Systems.* The agency subsequently added the dummy to Standard No. 213 in a final rule published in the **Federal Register** (60 FR 35126) on July 6, 1995.

In these rulemakings, NHTSA recognized that a more advanced 6-year-old child dummy was under development, and the possible future desirability of adopting such a dummy. In commenting on the agency's proposal to add the subpart I dummy to Standard No. 213, the American Automobile Manufacturers Association (AAMA) suggested that the agency instead add a 6-year-old child dummy based on the 50th percentile male Hybrid III dummy. AAMA stated that this dummy had improved anthropometric emulation, more human-like response, and superior instrumentation capability.

NHTSA explained its decision to adopt the Subpart I 6-year-old child dummy, rather than a more advanced dummy, as follows:

> The issue of whether NHTSA should adopt the Hybrid III 6-year-old dummy instead of the (Subpart I) dummy was addressed in the NPRM and in the rule adopting the 6-year-old dummy specifications into part 572. NHTSA's position has been that, while the Hybrid III dummy might have potential advantages over the (Subpart I) dummy in the number of injury parameters the dummies can measure, rulemaking on the latter dummy should not be delayed pending assessment of the performance of the new dummy. NHTSA stated in the part 572 final rule:
>
> The (Subpart I) dummy's ability to measure HIC, chest acceleration and femur loads, and its ability to replicate the motions and excursions of a child in a crash are sufficient to provide valid assessment of the injury potential of child restraint systems in a reliable manner. Since the (Subpart I) dummy is ready now, and a final rule specifying the dummy will help improve safety, the agency believes it is appropriate to proceed with adding the dummy to part 572.
>
> Likewise, NHTSA believes rulemaking adopting use of a 6-year-old dummy in Standard 213 compliance tests should not be delayed pending evaluation of the suitability and availability of the dummy as a test

device. Such evaluation will be undertaken in the near future.

60 FR 35129–30.

While the desirability of a more advanced 6-year-old child dummy has been apparent for a number of years, the need for such a dummy has become more urgent with the emergence of the safety problems current air bags pose for out-of-position children. Experience in using the subpart I dummy has shown it to be adequate for the purpose of evaluating child restraints for the injury criteria and test conditions specified by Standard No. 213, but limited with respect to the types of injury risks it can measure, particularly in an air bag environment.

For example, the neck of the subpart I dummy is not of multi-segment design. Accordingly, it has less biofidelity in areas such as impact responses in flexion and extension motion. Since neck injury is one of the primary causes of fatalities to out-of-position children from air bags, biofidelity is needed in these areas to evaluate the effects of air bag deployment on children.

By contrast, the more advanced Hybrid III 6-year-old child dummy (hereafter referred to as the H-III6C dummy) incorporates improved biofidelity and extended measurement capability in many areas, including those discussed above. Because of the greater biofidelity and extended measurement capability of the H-III6C dummy, it can be used to evaluate the safety of children in a much wider array of environments than the Subpart I dummy, including assessing the effects of air bag deployment on out-of-position children. The agency notes that the H-III6C dummy is the only advanced 6-year-old child dummy that has been developed to date.

The H–III6C dummy is part of a family of Hybrid III-type dummies. The first Hybrid III dummy was a 50th percentile male dummy. NHTSA has specified use of this dummy for compliance testing under Standard No. 208, *Occupant Crash Protection,* since 1986, initially on an optional basis, and more recently on a mandatory basis.

The need for a family of Hybrid III-type dummies having considerably improved biofidelity and anthropometry was recognized by the Centers for Disease Control and Prevention (CDC) in 1987 when it awarded a contract to Ohio State University under the title ''Development for Multi-sized Hybrid III Based Dummy Family.'' At that time, the funding covered only the development of a small female and a large male dummy. However, CDC provided additional funding in 1989 to develop a design foundation for a Hybrid III type 6-year-old child dummy.

Development of the H–III6C has continued since then under the guidance of the Hybrid III Dummy Family Task Force of SAE. NHTSA has also been involved with development of the dummy, initially as an observer in meetings of the SAE Task Force. As the development of the dummy approached maturity, the agency began to prefer the use of the dummy in its research programs, because of its advanced instrumentation capability and better biofidelity.

NHTSA began substantial use of the H–III6C dummy in late 1994. However, it found that inconsistencies in impact response and durability problems necessitated modifications. This prevented the agency from conducting an assessment of the dummy's capabilities as an objective and stable test tool and its ability to function in a variety of impact environments without structural deficiencies. The agency advised the SAE Task Force of its interest in seeing the dummy development accelerate and be brought to a quick conclusion because of the need to support air bag safety assessment and better evaluation of new child restraints. Subsequent testing of the dummy revealed additional problems requiring additional redesigns in the neck and thorax areas, which stretched the first availability of preproduction dummies into midsummer 1997. At that time, the agency began an extensive test and evaluation program of the dummy.

The agency has now completed its evaluation of the H–III6C dummy and has tentatively concluded that it is ready for incorporation into part 572. NHTSA is placing in the docket a technical report entitled ''Development and Evaluation of the Hybrid III 6-Year-Old Child Dummy.'' That report provides the technical information supporting this rulemaking.

Accordingly, the agency is proposing specifications and performance criteria for the H–III6C dummy. The specifications would consist of the following three items:

(1) A drawings and specifications package entitled ''Drawings and Specifications for the Hybrid III 6-Year-Old Dummy (May 1998)'';

(2) A user's manual entitled ''User's Manual for the Hybrid III 6-Year-Old Dummy [a date would be inserted in the final rule]''; and

(3) A document entitled ''Printout of Descriptions of Patterns and Molds for the Hybrid III 6-Year Old Dummy in Digital Form [a date would be inserted in the final rule]'';

These specifications are intended to ensure that the dummies are uniform in their construction and capable of uniform and repeatable response in the impact environment. The agency notes that the first item listed above, the drawings and specifications, will be available for inspection in NHTSA's docket. (Since this item is non-scannable, it cannot be placed in the DOT Dockets Management System (DMS). Instead a statement indicating where it may be viewed, i.e., in NHTSA's docket, will be placed in the DMS.) Copies may also be obtained from Reprographic Technologies, 9000 Virginia Manor Road, Beltsville, MD 20705; Telephone: (301) 210–5600.

The user's manual and digital descriptions of patterns and molds will not be available until the time of the final rule. The user's manual will be similar to the user's manual specified by part 572 for other dummies.

As with other dummies, NHTSA is proposing impact performance criteria to serve as calibration checks, and to further assure the kinematic uniformity of the dummy and the absence of damage from previous use. The tests address head, neck, thorax and femur impact responses and stiffness assessments of the lumbar spine-abdomen area to torso flexion motion.

The agency is proposing generic specifications for all of the dummy-based sensors. For most earlier dummies, the agency specified sensors by make and model. However, NHTSA believes that approach is unnecessarily restrictive.

The generic specifications that the agency is proposing include (1) the uniaxial piezoresistive accelerometer designated as SA572–S4, (2) force and moment transducers: upper neck SA572–S11, lumbar spine SA572–S12, anterior-superior iliac spine load cell SA572–S13, single axis femur load cell SA572–S10, and (3) the thorax-based chest deflection potentiometer SA572–51. The proposed specifications essentially reflect the characteristics of the sensors used in NHTSA's dummy evaluation series that are identified by make and model in the above referenced technical report ''Development and Evaluation of the Hybrid III 6-year-old Child Dummy.'' Specifications for these sensors are included in the drawing package. Interested persons are encouraged to comment on the adequacy of the proposed specifications; potential impact on the measured test data, including the comparability of data using sensors manufactured by different companies; and issues related to calibration assurance tests.

NHTSA notes that the H–III6C dummy is the first of several new dummies it will propose to add to part 572. Later this year, the agency plans to propose adding an advanced 3-year-old child dummy, the CRABI 12 month old child dummy, and the Hybrid III 5th percentile female adult dummy. The agency intends to use these dummies in its rulemaking for advanced air bags. All of these dummies could be specified for use in a variety of potential Standard No. 208 tests, including static out-of-position tests and/or various dynamic tests. The child dummies could also be specified for use in Standard No. 213 tests.

This notice only concerns the H–III6C dummy, and is only proposing to add the dummy to part 572. The issue of specifying the use of the H–III6C dummy as part of Standard No. 208 or Standard No. 213 will be addressed in future rulemakings However, since one of the primary purposes of adding the dummy to part 572 is to enable it to be specified for use in the Federal motor vehicle safety standards, NHTSA encourages commenters to address its suitability for the types of tests discussed above. The agency also encourages commenters to address the dummy's suitability with respect to measuring potential injury criteria.[1]

Rulemaking Analyses and Notices

A. Executive Order 12866 and DOT Regulatory Policies and Procedures

NHTSA has considered the impact of this rulemaking action under Executive Order 12866 and the Department of Transportation's regulatory policies and procedures. This rulemaking document was not reviewed by the Office of Management and Budget under E.O. 12866, ''Regulatory Planning and Review.'' The rulemaking action has been determined not to be significant under the Department's regulatory policies and procedures.

This document proposes to amend 49 CFR part 572 by adding design and performance specifications for a new, more advanced 6-year old child dummy which the agency may later separately propose for use in the Federal motor vehicle safety standards. If this proposed rule becomes final, it would affect only those businesses which choose to manufacture or test with the dummy. It does not impose any requirements on anyone.

The cost of an uninstrumented H–III6C dummy is approximately $30,000. Instrumentation would add approximately $25,000 to $41,000 to the cost, depending on the amount of instrumentation.

Because the economic impacts of this proposal are so minimal, no further regulatory evaluation is necessary.

B. Regulatory Flexibility Act

NHTSA has considered the effects of this rulemaking action under the Regulatory Flexibility Act (5 U.S.C. 601 *et seq.*) I hereby certify that the proposed amendment would not have a significant economic impact on a substantial number of small entities. The proposed amendment would not impose or rescind any requirements for anyone. Therefore, it would not have a significant economic impact on a substantial number of small entities.

C. National Environmental Policy Act

NHTSA has analyzed this proposed amendment for the purposes of the National Environmental Policy Act and determined that it would not have any significant impact on the quality of the human environment.

D. Executive Order 12612 (Federalism)

The agency has analyzed this proposed amendment in accordance with the principles and criteria set forth in Executive Order 12612. NHTSA has determined that the proposed amendment does not have sufficient federalism implications to warrant the preparation of a Federalism Assessment.

Request for Comments

Interested persons are invited to submit comments on this proposal. Two copies should be submitted.

All comments must not exceed 15 pages in length (49 CFR 553.21). Necessary attachments may be appended to these submissions without regard to the 15-page limit. This limitation is intended to encourage commenters to detail their primary arguments in a concise fashion.

If a commenter wishes to submit certain information under a claim of confidentiality, three copies of the complete submission, including purportedly confidential business information, should be submitted to the Chief Counsel, NHTSA, at the street address given above, and two copies from which the purportedly confidential information has been deleted should be submitted to the Docket Section. A request for confidentiality should be accompanied by a cover letter setting forth the information specified in the agency's confidential business information regulation. 49 CFR part 512.

All comments received by NHTSA before the close of business on the comment closing date indicated above will be considered, and will be available for examination in the docket at the above address both before and after that date. To the extent possible, comments filed after the closing date will also be considered. Comments received too late for consideration in regard to this action will be considered as suggestions for further rulemaking action. Comments will be available for inspection in the docket. The NHTSA will continue to file relevant information as it becomes available in the docket after the closing date, and recommends that interested persons continue to examine the docket for new material.

Those persons desiring to be notified upon receipt of their comments in the rules docket should enclose a self-addressed, stamped postcard in the envelope with their comments. Upon receiving the comments, the docket supervisor will return the postcard by mail.

List of Subjects in 49 CFR Part 572

Motor vehicle safety.

In consideration of the foregoing, NHTSA proposes to amend 49 CFR part 572 as follows:

PART 572—ANTHROPOMORPHIC TEST DUMMIES

1. The authority citation for part 572 would continue to read as follows:

Authority: 15 U.S.C. 1392, 1407; delegation of authority at 49 CFR 1.50.

2. 49 CFR part 572 would be amended by adding a new subpart N, consisting of §§ 572.120–572.129, to read as follows:

Subpart N—Hybrid III 6-Year-Old Child

Sec.
572.120 Incorporation by reference.
572.121 General description.
572.122 Head assembly and test procedure.
572.123 Neck assembly and test procedure.
572.124 Thorax assembly and test procedure.
572.125 Lumbar spine, abdomen, and pelvis assembly and test procedure.
572.126 Knees and knee impact test procedure.
572.127 Test conditions and instrumentation.

Subpart N—Hybrid III 6-Year-Old Child

§ 572.120 Incorporation by reference.

(a) The following materials are hereby incorporated in this subpart N by reference:

(1) A drawings and specifications package entitled ''Drawings and

[1] For information concerning potential injury criteria, see NHTSA Event Report, ''Techniques for Developing Child Dummy Protection Reference Values,'' Docket No. NHTSA–1996–1772–70, and SAE Human Biomechanics and Simulation Standards Committee comments concerning that report, Docket No. NHTSA–1996–1772–94.

Specifications for the Hybrid III 6-Year-Old Dummy (May 1998)'';

(2) A user's manual entitled ''User's Manual for the Hybrid III 6-Year-Old Dummy [a date will be inserted in the final rule]'';

(3) A document entitled ''Printout of Descriptions of Patterns and Molds for the Hybrid III 6-Year Old Dummy in Digital Form [a date will be inserted in the final rule]'';

(4) SAE Recommended Practice J211, Rev. Mar95 ''Instrumentation for Impact Tests'';

(5) SAE J1733 of 1994–12, ''Sign Convention for Vehicle Crash Testing.''

(6) The Director of the Federal Register approved those materials incorporated by reference in accordance with 5 U.S.C. 552(a) and 1 CFR part 51. Copies of the materials may be inspected at NHTSA's Docket Section, 400 Seventh Street S.W., room 5109, Washington, DC, or at the Office of the Federal Register, 800 North Capitol Street, NW, Suite 700, Washington, DC.

(b) The incorporated materials are available as follows:

(1) The drawings and specifications package referred to in paragraph (a)(1) of this section and the user's manual referred to in paragraph (a)(2) of this section are available from Reprographic Technologies, 9000 Virginia Manor Road, Beltsville, MD 20705 (301) 210–5600.

(2) The printout of the descriptions of patterns and molds for the Hybrid III 6-Year Old Dummy in digital form referred to in paragraph (a)(1)(3) of this section is available from NHTSA's Docket Section.

(3) The SAE materials referred to in paragraphs (a)(4) and (a)(5) of this section are available from the Society of Automotive Engineers, Inc., 400 Commonwealth Drive, Warrendale, PA 15096.

§ 572.121 General description.

(a)(1) The Hybrid III 6-year-old dummy consists of the components and assemblies that are described by ''Drawings and Specifications for the Hybrid III 6-Year-Old Dummy (May 1998).'' The complete assembly of the dummy is shown in drawing 127–0000. The component assemblies, and their drawing numbers, are listed in the following Table A:

TABLE A

Component assembly	Drawing No.
Head Assembly	127–1000
Neck Assembly	127–1015
Upper Torso Assembly	127–2000
Lower Torso Assembly	127–3000
Leg Assembly	127–4000

TABLE A—Continued

Component assembly	Drawing No.
Arm Assembly	127–5000

(2) These drawings, and all other drawings referred to in this subpart by the term ''drawing'' followed by a number, are contained in ''Drawings and Specifications for the Hybrid III 6-Year-Old Dummy (May 1998).''

(b) Disassembly, inspection, and assembly procedures are set forth in ''User's Manual for the Hybrid III 6-Year-Old Dummy [a date will be inserted in the final rule]'';

(c) The patterns and molds are described by ''Printout of Descriptions of Patterns and Molds for the Hybrid III 6-Year-Old Dummy in Digital Form [a date will be inserted in the final rule]'';

(d) Adjacent segments are joined in a manner such that except for contacts existing under static conditions, there is no contact between metallic elements throughout the range of motion or under simulated crash impact conditions.

(e) The structural properties of the dummy are such that the dummy conforms to this Part in every respect both before and after its use in any test similar to those specified in Standard No. 208, *Occupant Crash Protection* and Standard No. 213, *Child Restraint Systems*.

§ 572.122 Head assembly and test procedure.

(a) Head assembly. The head consists of the assembly shown in drawing 127–1000, six axis neck transducer structural replacement (drawing 78051–383X), head to neck pivot pin (drawing 78051–339) and 3 accelerometers (drawing SA–572 S4) mounted in conformance to drawing 127–1550.

(b) When the head assembly in paragraph (a) of this section is dropped from a height of 376.0+/−1.0 mm (14.8+/−0.04 in) in accordance with paragraph (c) of this section the peak resultant acceleration at the location of the accelerometers at the head CG shall not be less than 245 G and more than 300 G. The resultant acceleration vs. time history curve shall be unimodal; oscillations occurring after the main pulse are less than 10 percent of the peak resultant acceleration. The lateral acceleration shall not exceed 15 g's (zero to peak).

(c) Head test procedure. The test procedure for the head is as follows:

(1) Soak the head assembly in a controlled environment with a temperature from 18.9 to 25.6 °C (66 to 78 °F) and a relative humidity from 10 to 70 percent for at least four hours prior to a test.

(2) Prior to the test, clean the impact surface of the skin and the impact surface of the steel plate with isopropyl alcohol, trichloroethane, or an equivalent. The skin of the head must be clean and dry for testing.

(3) Suspend the head assembly as shown in Figure N1. The lowest point on the forehead is 376.0+/−1.0 mm (14.8 +/−0.04 in) from the impact surface and the head is oriented to an incline of 62 +/−1 deg. between the plane of the lower surface of the six axis transducer or its structural replacement and the plane of the impact surface. The 1.57 mm (0.062 in.) diameter holes located on either side of the dummy's head are used to ensure that the head is level with respect to the impact surface.

(4) Drop the head assembly from the specified height by means that ensures a smooth, instant release onto a rigidly supported flat horizontal steel plate which is 50.4 mm (2 in) thick and 610 mm (24 in) square. The impact surface shall be clean, dry and have a micro finish of not less than 203.2×10^{-6} mm (8 micro inches) (RMS) and not more than 2032.0×10^{-6} mm (80 micro inches) (RMS).

(5) Allow at least 2 hours between successive tests on the same head.

§ 572.123 Neck assembly and test procedure.

(a) The neck assembly consists of the assembly of components shown in drawing 127–1015.

(b) Neck assembly. When the head-neck assembly, consisting of the head shown in drawing 127–1000, neck shown in drawing 127–1015, pivot pin 78051–339, bib simulator shown in drawing 127–1025, neck bracket shown in drawing 127–8221, six axis neck transducer shown in drawing SA–572 S11, neck mounting adapter TE–2208–001, and either three accelerometers as shown in drawing SA572S4 installed in the head assembly as specified in section 572.122 or their equivalent, is tested according to the test procedure in paragraph (c) of this section, it shall have the following characteristics:

(1) Flexion. Plane D referenced in Figure N2, shall rotate in the direction of preimpact flight with respect to the pendulum's longitudinal centerline between 74 degrees and 92 degrees. During this rotation interval, the moment measured by the neck transducer (drawing SA–572 S11) about the occipital condyles shall not be less than 27Nm (19.9 ft-lb) and not more than 33 Nm (24.3 ft-lb). The moment shall be calculated by the following formula: Moment (Nm) = $My-(0.01778m)\times(Fx)$. The positive

moment shall decay for the first time to 5 Nm between 103 ms and 123 ms.

(2) Extension. Plane D referenced in Figure N3, shall rotate in the direction of preimpact flight with respect to the pendulum's longitudinal centerline between 94 degrees and during this rotation interval, the moment measured by the neck transducer (drawing S–572 S11) about the occipital condyles shall not be more than −19 Nm (−14 ft-lb) and not less than −24 Nm (−17.7ft-lb). The moment shall be calculated by the following formula: Moment (Nm) = My−(0.01778m)×(Fx). The negative moment shall decay for the first time to −5 Nm between 127 ms and 147 ms.

(3) Time-zero is defined as the time of initial contact between the pendulum striker plate and the honeycomb material.

(c) Test Procedure (1) Soak the neck assembly in a controlled environment at a temperature between 20.6 to 22.2°C (69 to 72 F) and a relative humidity from 10 to 70 percent for at least four hours prior to a test.

(2) Torque the jam nut (drawing 9000341) on the neck cable (drawing 127–1016) to 0.23 Nm (2 in-lbs).

(3) Mount the head-neck assembly defined in paragraph (b) of this section, on the pendulum so the midsagittal plane of the head is vertical and coincides with the plane of motion of the pendulum as shown in Figure N2 for flexion and Figure N3 for extension tests.

(4) Release the pendulum and allow it to fall freely from a height to achieve an impact velocity of 4.95+/−0.12 m/s (16.2 +/−0.4 ft/s) for flexion and 4.3 +/−0.12 m/s (14.10+/−0.40 ft/s) for extension tests, measured by an accelerometer at the center of the pendulum at the instant of contact with the honey comb.

(i) Time-zero is defined as the time of initial contact between the pendulum striker plate and the honeycomb material. All data channels should be at the zero level at this time.

(ii) Stop the pendulum from the initial velocity with an acceleration vs. time pulse which meets the velocity change as specified below. Integrate the pendulum acceleration data channel to obtain the velocity vs. time curve:

	Pendulum pulse			
Time	Flexion		Extension	
ms	m/s	ft/s	m/s	ft/s
10	1.2–1.6	3.9–5.3	1.0–1.4	3.3–4.6
20	2.4–3.4	7.9–11.2	2.2–3.0	7.2–9.8
30	3.8–5.0	12.5–16.4	3.2–4.2	10.5–13.8

§ 572.124 Thorax assembly and test procedure.

(a) *Thorax (Upper Torso) Assembly.* The thorax consists of the part of the torso assembly shown in drawing 127–2000.

(b) *Thorax assembly.* When the anterior surface of the thorax of a completely assembled dummy (drawing 127–0000) is impacted by a test probe conforming to § 572.127(a) at 6.71 +/−0.12 m/s (22.0 +/−0.4 ft/s) according to the test procedure in paragraph (c) of this section,

(1) The peak force measured by the probe in accordance with § 572.127 shall not be less than 1150 N (258 lbs) and not more than 1300 N (292 lbs) and the maximum sternum displacement relative to the spine is not less than 38.0 mm (1.50 in) and not more than 44.0 mm (1.7 in) as measured with chest deflection transducer (drawing 127–8050), and

(2) The internal hysteresis of the ribcage in each impact as determined by the plot of force vs. deflection in paragraph (b)(1) of this section shall be not less than 69 percent but not more than 85 percent.

(c) *Test procedure.* (1) Soak the dummy in a controlled environment at a temperature between 20.6 to 22.2°C (69 to 72 F) and a relative humidity from 10 to 70 percent for at least four hours prior to a test.

(2) Seat and orient the dummy, that wears light weight cotton stretch short sleeve shirt and above the knee pants on a seating surface without back support as shown in Figure N4, with the limbs extended horizontally and forward, parallel to the midsagittal plane, the midsagittal plane vertical within +/−1 degree and the ribs level in the anterior-poster and lateral directions within +/−0.5 degrees.

(3) Establish the impact point at the chest midsagittal plane so that the impact point of the longitudinal centerline of the probe coincides with the midsagittal plane of the dummy within +/−2.5 mm (0.1 in.) and is 12.7 +/−1.1 mm (0.5+/−0.04 in.) below the horizontal centerline of the No. 3 rib and is within 0.5 degrees of a horizontal line in the dummy's midsagittal plane.

(4) Adjust the dummy so that the tangent plane at the surface on the ribs immediately adjacent to the designated impact point is vertical and parallel to the face of the test probe.

(5) Impact the thorax with the test probe so that at the moment of contact the probe's longitudinal center line falls within 2 degrees of a horizontal line in the dummy's midsagittal plane.

(6) Guide the test probe during impact so that there is no significant lateral, vertical or rotational movement.

(7) Allow at least 30 minutes between successive tests.

§ 572.125 Lumbar spine, abdomen, and pelvis assembly and test procedure.

(a) Upper/lower torso assembly. The test objective is to determine the stiffness effects of the lumbar spine (drawing 127–3002) and abdominal insert (drawing 127–8210) on resistance to articulation between the upper torso assembly (drawing 127–2000) and the lower the torso assembly (drawing 127–3000).

(b) When the upper torso assembly of a seated dummy is subjected to a force continuously applied at the head to neck pivot pin level through a rigidly attached adaptor bracket as shown in Figure N5, according to the test procedure set out in paragraph (c) of this section, the lumbar spine-abdomen assembly shall:

(1) Flex by an amount that permits the upper torso assembly to translate in angular motion until the instrument cavity mating surface at the back of the thoracic spine is at 45 degrees relative to the vertical transverse plane at which time the force level applied perpendicular to the thoracic spine box mating surface is not less than 33 pounds and not more than 45 pounds, and

(2) Upon removal of the force the torso assembly returns to within 8 degrees of its initial position.

(c) Test procedure.

(1) Assemble the upper and the lower thorax including the loading adaptor bracket, and attach them to the fixture

in a seated posture as shown in Figure N5.

(2) Secure the pelvis at the pelvis instrument cavity rear face at the by threading four ¼ in cap screws into the available threaded attachment holes. Tighten the mountings so that the test material is rigidly affixed to the test fixture and pelvic-lumbar joining surface is horizontal.

(3) Attach the loading adapter bracket to the spine of the dummy and the pull cable and load cell as shown in Figure N5.

(4) Flex the thorax forward 40 degrees and then rearward as necessary to allow the torso to return to its initial position without external assistance.

(5)(i) Apply a forward force in the midsagittal plane through the adaptor bracket as shown in Figure N5 at any upper torso deflection rate between 0.5 and 1.5 degrees per second, up to 45 degrees of flexion, at which time the applied force is perpendicular to the thoracic spine box instrumentation cavity mating surface.

(ii) Continue to apply a force sufficient to maintain 45 degrees of flexion for 10 seconds, and record the highest applied force during the 10 seconds period.

(iii) Release all force as rapidly as possible, and measure the return angle 3 minutes after the release.

§ 572.126 Knees and knee impact test procedure.

(a) The knee assembly is part of the leg assembly shown in drawing 127–4000.

(b) Knee assembly. When the knee assembly, consisting of the knee cap shown in drawing 127–4013–1 (left) –2 (right), knee flesh shown in drawing 127–4011, lower leg shown in drawing 127–4014, the foot assembly shown in drawing 127–4030–1 (left) –2 (right), and femur load transducer shown in drawing SA–572 S10 or its structural replacement (drawing 127–4007), is tested according to the test procedure in § 572.127(c), the peak resistance force as measured with the test probe mounted accelerometer is not less than 1.8 kN (441 lbs) and not more than 2.8 kN (617 lbs).

(c) Test Procedure.

(1) Soak the knee assembly in a controlled environment at a temperature between 18.9 to 25.6 C (66 to 78 F) and a relative humidity from 10 to 70 percent for at least four hours prior to a test.

(2) Mount the test material and secure it to a rigid test fixture as shown in Figure N6. No contact is permitted between any part of the foot and tibia and any exterior surface.

(3) Align the test probe so that throughout its stroke and at contact with the knee it is within 2 deg. of horizontal and collinear with the longitudinal centerline of the femur.

(4) Guide the pendulum so that there is no significant lateral vertical or rotational movement at time zero.

(5) The test probe velocity at the time of contact is 2.1+/−0.03 m/s (6.9+/−0.1 ft/s).

(6) Time-zero is defined as the time of initial contact between the impactor and the knee.

§ 572.127 Test conditions and instrumentation.

(a) The test probe for thoracic impacts is a 101.6 +/−0.25 mm (4.00 +/−0.01 in.) diameter cylinder that weighs 2.86 +/−.02 kg (6.3 +/−0.05 lb) including instrumentation. Its impacting end has a flat right angle face that is rigid and has an edge radius of 12.7 mm (0.5 in.). The test probe has an accelerometer mounted on the end opposite from impact with its sensitive axis collinear with the longitudinal centerline of the cylinder.

(b) The test probe for knee impact tests is a 76.2 +/−0.2 mm (3.0 +/−0.01 in.) diameter cylinder that weighs .82 +/−.01 kg (1.8 +/−0.02 lb) including instrumentation. Its impacting end has a flat right angle face that is rigid and has an edge radius of 12.7 mm (0.5 in.) max. The test probe has an accelerometer mounted on the end opposite from impact with its sensitive axis collinear to the longitudinal centerline of the cylinder.

(c) Head accelerometers shall have dimensions, response characteristics, and sensitive mass locations specified in drawing SA–572 S4 or equivalent and be mounted in the head as shown in drawing 127–0000 sheet 3.

(d) The neck force/moment transducer shall have the dimensions, response characteristics, and sensitive axis locations specified in drawing SA–572 S11 or its equivalent and be mounted in the head-neck assembly as shown in drawing 127–0000 sheet 3.

(e) The thorax accelerometers shall have the dimensions, response characteristics, and sensitive mass locations specified in drawing SA–572 S4, or its equivalent and are mounted in the torso assembly in triaxial configuration at T4, and in uniaxial for-and-aft oriented configuration on the most anterior ends of ribs #1 and #6 and at the spine box at the levels of #1 and #6 ribs as shown in drawing 127–2000.

(f) The chest deflection transducer shall have the dimensions and response characteristics specified in drawing 127–8050 or equivalent and be mounted in the upper torso assembly as shown in drawing 127–2000.

(g) The optional lumbar spine force-moment transducer shall have the dimensions, response characteristics, and sensitive axis locations specified in drawing SA–572 S12 or its equivalent and be mounted in the lower torso assembly as shown in drawing 127–3000 as a replacement for lumbar adaptor 127–3005.

(h) The optional iliac spine force transducers shall have the dimensions and response characteristics specified in drawing SA–572 S13 or equivalent and be mounted in the torso assembly as shown in drawing 127–3000 as a replacement for A.S.I.S. load cell replacement 127–3015–1 (left) and –2 (right).

(i) The optional pelvis accelerometers shall have the dimensions, response characteristics, and sensitive mass locations specified in drawing SA–572 S4, or its equivalent and be mounted in the torso assembly in triaxial configuration in the pelvis bone as shown in drawing 127–3550.

(j) The femur force transducer shall have the dimensions and response characteristics specified in drawing SA–572 S10 or its equivalent and be mounted in the leg assembly as shown in drawing 127–4001.

(k) The outputs of acceleration and force-sensing devices installed in the dummy and in the test apparatus specified by this part are recorded in individual data channels that conform to the requirements of SAE Recommended Practice J211, Rev. Mar95 ''Instrumentation for Impact Tests,'' with channel classes as follows:

(1) Head acceleration—Class 1000.

(2) Neck:

(i) Forces—Class 1000.

(ii) Moments—Class 600.

(iii) Pendulum acceleration—Class 180.

(3) Thorax:

(i) Rib acceleration—Class 1000.

(ii) Spine and pendulum accelerations—Class 180.

(iii) Sternum deflection—Class 600.

(4) Lumbar:

(i) Forces—Class 1000.

(ii) Moments—Class 1000.

(5) Pelvis accelerations -Class 1000.

(6) Femur forces—Class 600.

(l) Coordinate signs for instrumentation polarity conform to the Sign Convention For Vehicle Crash Testing, Surface Vehicle Information Report, SAE J1733, 1994–12.

(m) The mountings for sensing devices shall have no resonance frequency within range of 3 times the frequency range of the applicable channel class.

(n) Limb joints are set at lg, barely restraining the weight of the limb when it is extended horizontally. The force required to move a limb segment shall not exceed 2G throughout the range of limb motion.

(o) Performance tests of the same component, segment, assembly, or fully assembled dummy are separated in time by period of not less than 30 minutes unless otherwise noted.

(p) Surfaces of dummy components are not painted except as specified in this part or in drawings subtended by this part.

BILLING CODE 4910–59–P

Figures to Subpart N

Figure N1

HEAD DROP TEST SET-UP SPECIFICATIONS

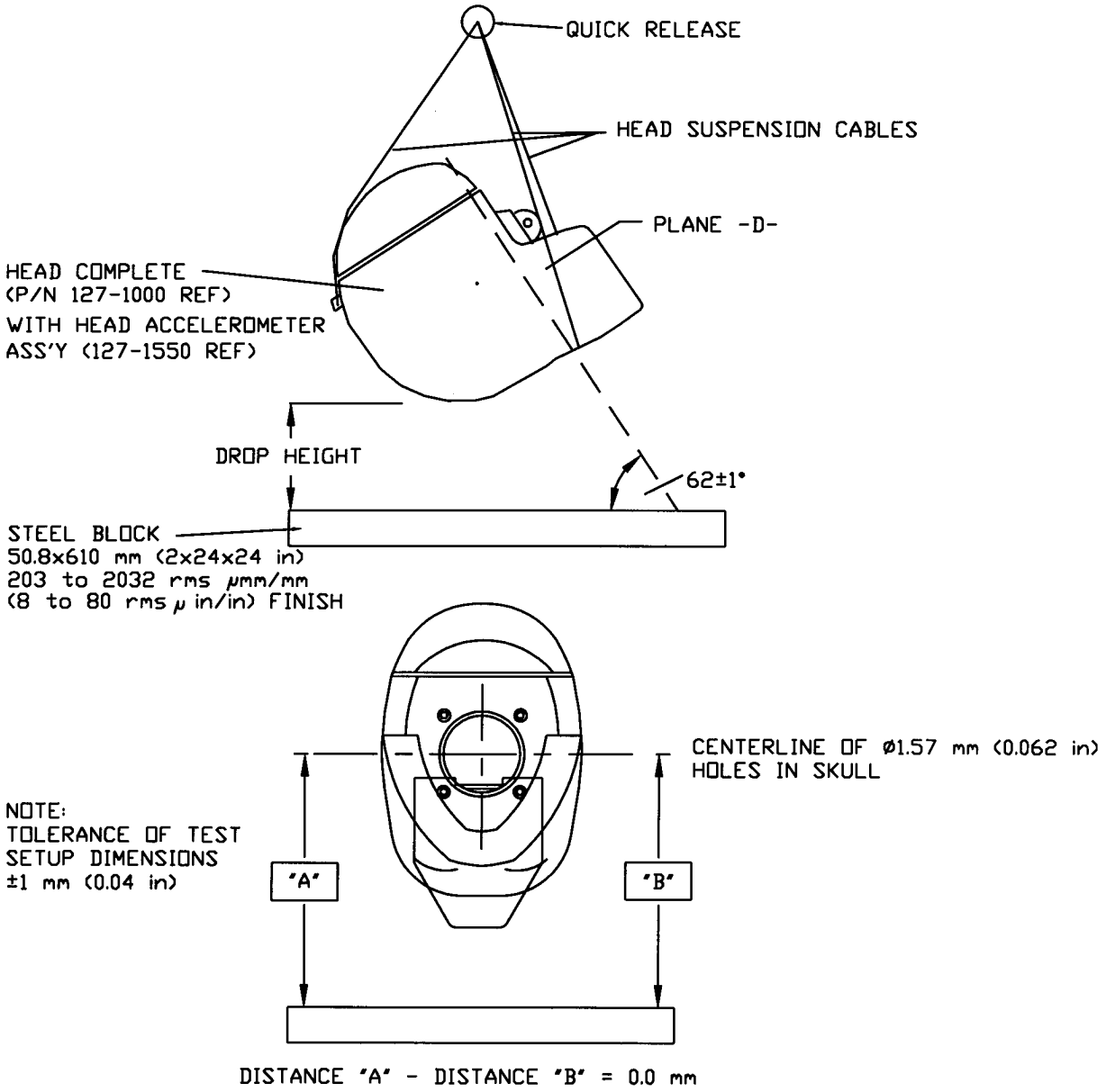

Figure N2

NECK FLEXION TEST SET-UP SPECIFICATIONS

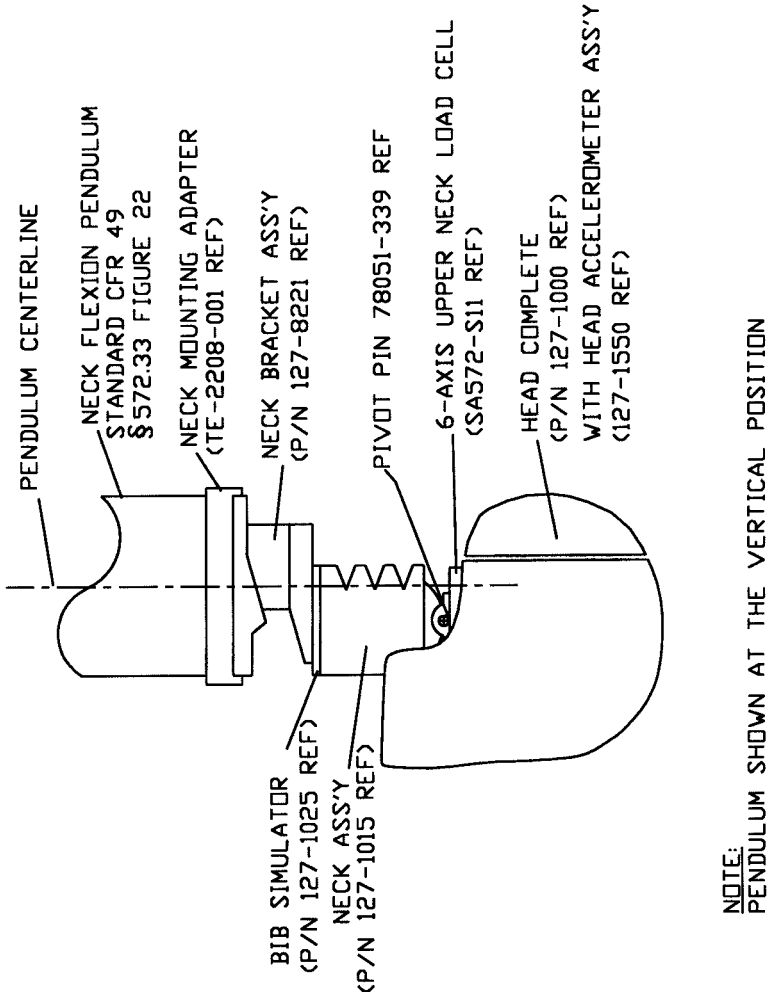

NOTE:
PENDULUM SHOWN AT THE VERTICAL POSITION

Figure N3

NECK EXTENSION TEST SET-UP SPECIFICATIONS

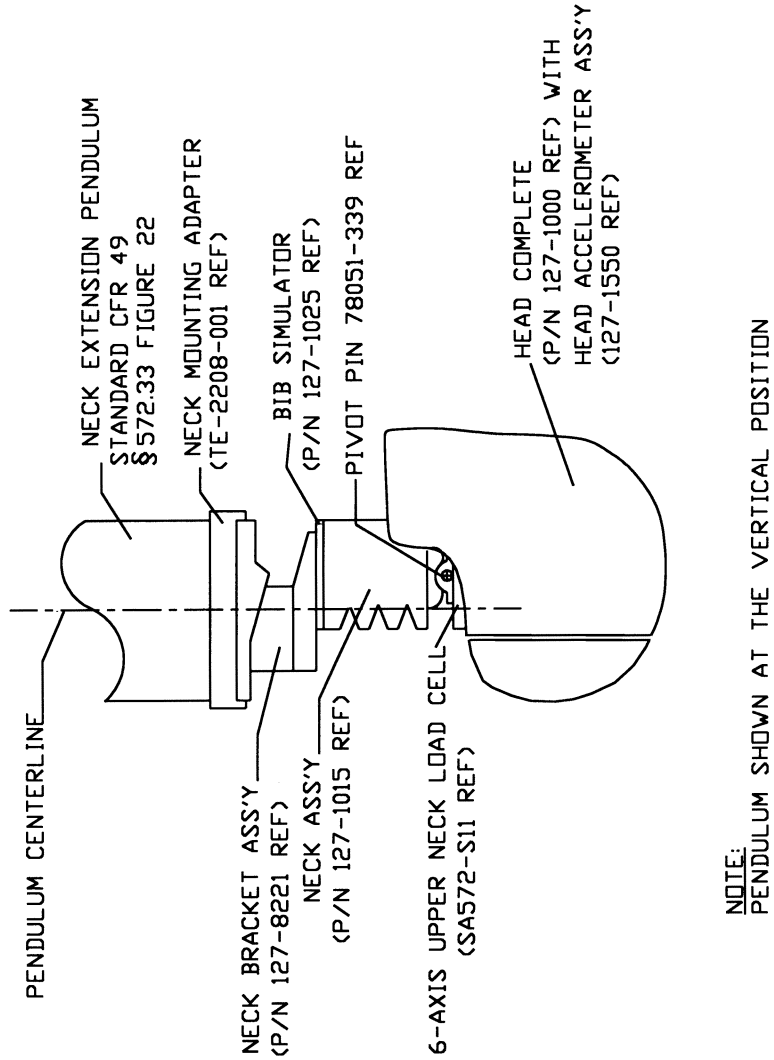

Figure N4

THORAX IMPACT TEST SET-UP SPECIFICATIONS

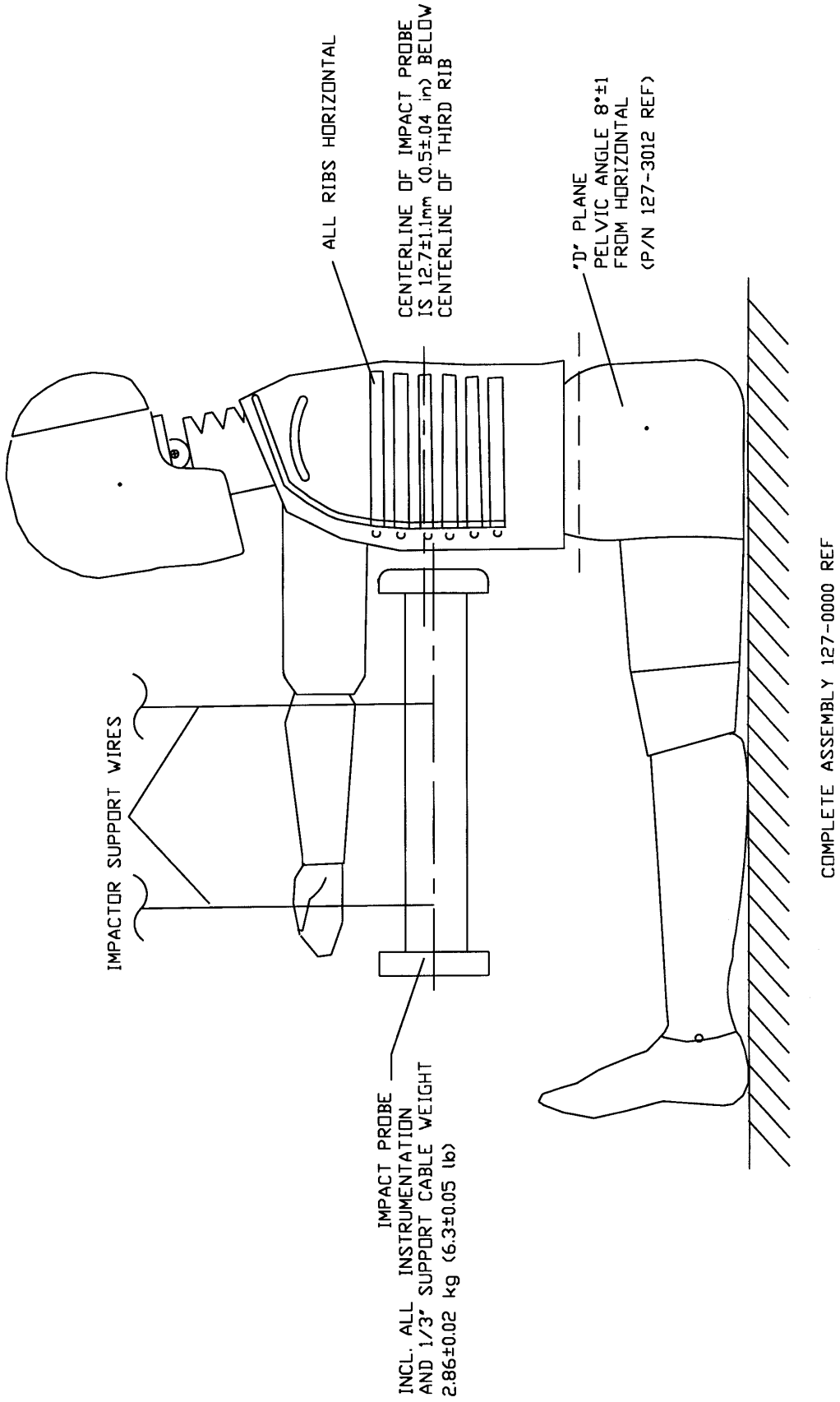

Figure N5

LUMBAR-SPINE FLEXION TEST SET-UP SPECIFICATIONS

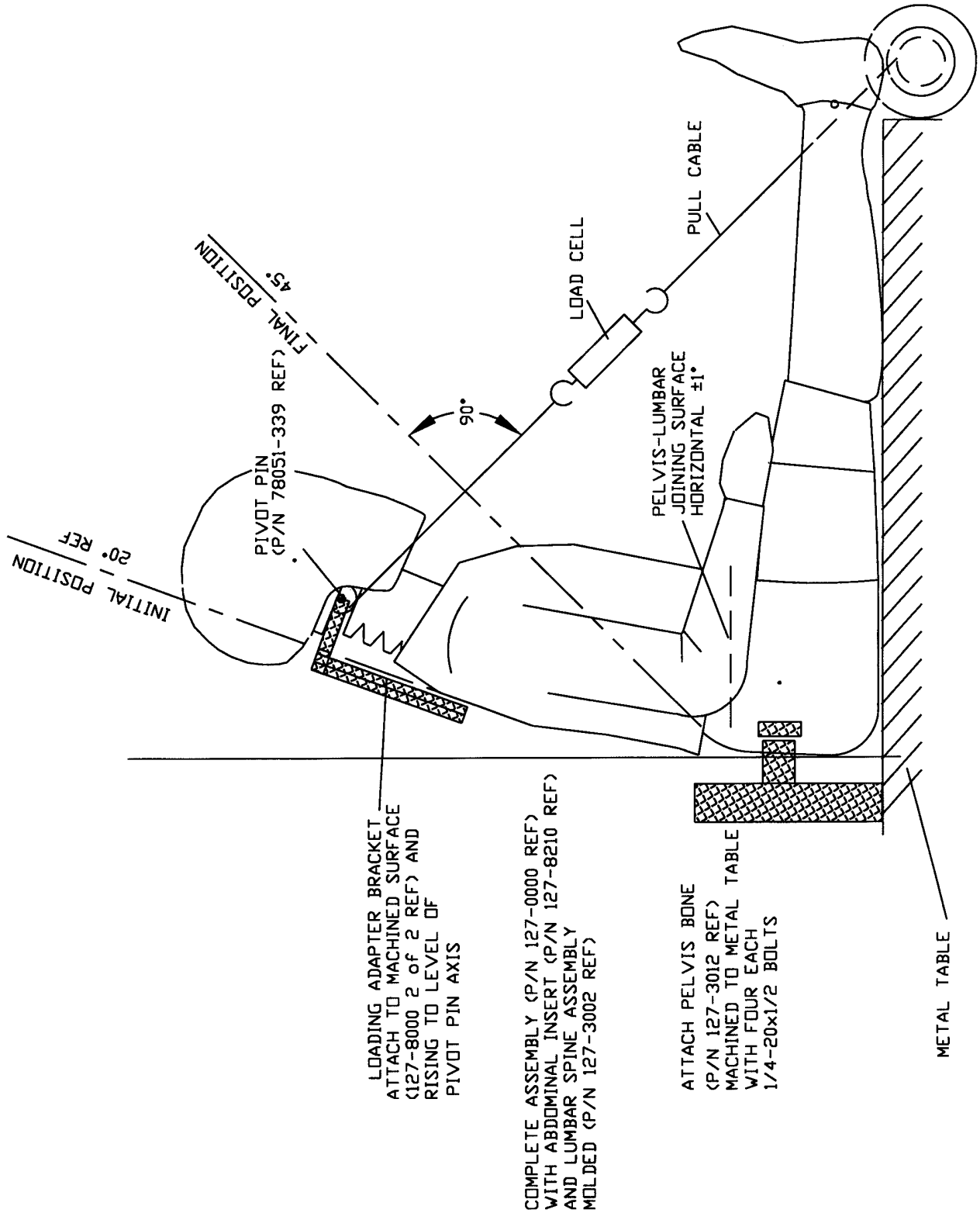

Figure N6

KNEE IMPACT TEST SET-UP SPECIFICATIONS

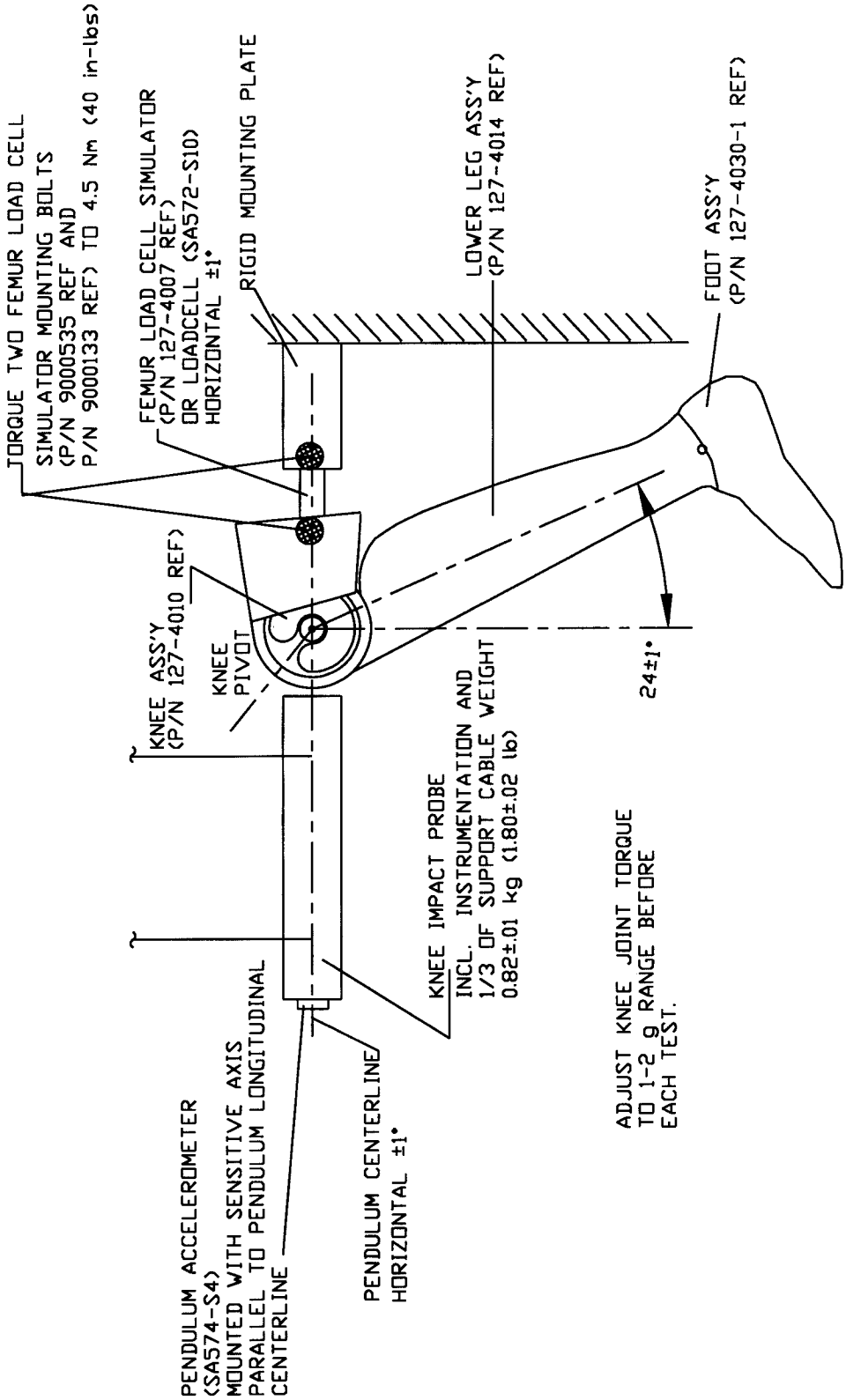

Issued on: June 22, 1988.

L. Robert Shelton,

Associate Administrator for Safety Performance Standards.

[FR Doc. 98–17138 Filed 6–25–98; 8:45 am]

BILLING CODE 4910–59–C

DEPARTMENT OF THE INTERIOR

Fish and Wildlife Service

50 CFR Part 17

Endangered and Threatened Wildlife and Plants; Notice of 12-Month Finding on a Petition To List the Northern Goshawk in the Contiguous United States West of the 100th Meridian

AGENCY: Fish and Wildlife Service, Interior.

ACTION: Notice of 12-month petition finding.

SUMMARY: The Fish and Wildlife Service (Service) announces a 12-month finding on a petition to list the northern goshawk (*Accipiter gentilis*) in the contiguous United States west of the 100th meridian under the Endangered Species Act, as amended (Act). After review of all available scientific and commercial information, the Service finds that listing this population as endangered or threatened is not warranted.

DATES: The finding announced in this document was made on June 22, 1998.

ADDRESSES: Data, information, comments or questions concerning this petition should be sent to Mr. David Wesley, Assistant Regional Director, Region 1, U.S. Fish and Wildlife Service, 911 N.E. 11th Avenue, Portland, Oregon 97232–4181, ATTN: Office of Technical Support. The petition, finding, supporting data and comments will be available for public inspection by appointment, during normal business hours at the following address: U.S. Fish and Wildlife Service, Office of Technical Support for Forest Resources, 333 S.W. 1st Avenue, 4th Floor, Portland, Oregon 97204, (503/808–2565).

FOR FURTHER INFORMATION CONTACT: Mr. David Wesley, Assistant Regional Director, Region 1, U.S. Fish and Wildlife Service, 911 N.E. 11th Avenue, Portland, Oregon 97232–4181 (503/231–6159); or Monty Knudsen, Office of Technical Support for Forest Resources, 333 S.W. 1st Avenue, Portland, Oregon 97204, (503/808–2565).

SUPPLEMENTARY INFORMATION:

Background

Section 4 of the Act (16 U.S.C. 1533) requires that the Service make a finding on whether a petition to list, delist or reclassify a species presents substantial scientific or commercial information to indicate that the petitioned action may be warranted. To the maximum extent practicable, this finding is to be made within 90 days of the receipt of the petition (90-day finding), and notice of the finding is to be published promptly in the **Federal Register**. If a finding is made that substantial information was presented, the Service is required to promptly commence a status review of the species involved and determine whether the petitioned action is warranted, not warranted or warranted but precluded by other higher priority listing actions.

On September 29, 1997, the Service announced a 90-day finding (62 FR 50892) for a petition to list the northern goshawk in the contiguous United States west of the 100th meridian under the Endangered Species Act of 1973, as amended. In that finding, the Service found that the petition presented substantial information indicating that the listing of the northern goshawk as a threatened or endangered species in the contiguous United States west of the 100th meridian may be warranted. At that time, the Service initiated a status review for this population of the northern goshawk and announced that a 12-month finding will be prepared at the conclusion of the review.

The northern goshawk (*Accipiter gentilis*) occurs in temperate and boreal forests of North America, Europe and Asia. In North America, the northern goshawk breeds from western and central Alaska, northern Yukon, eastern and southern Mackenzie, southern Keewatin, northeastern Manitoba, northern Ontario, central and northeastern Quebec, Labrador, and Newfoundland south to southern Alaska, central California, southern Nevada, southeastern Arizona, southern New Mexico, the eastern foothills of the Rockies and the Black Hills, central Alberta, central Saskatchewan, southern Manitoba, northern Minnesota, central Michigan, Pennsylvania, central New York, northwestern Connecticut, and locally south in the montane habitats at least to West Virginia and possibly to eastern Tennessee and western North Carolina (Squires in prep). This notice pertains to the northern goshawk that occurs in the contiguous United States west of the 100th meridian.

In North America, the winter range of goshawks includes all of the breeding range, and extends south as far as southern California, northern Mexico and Texas, and occasionally to northern portions of the Gulf States, rarely including Florida (Squires in prep).

Two groups of the northern goshawk are recognized worldwide: the palearctic *gentilis* group and the nearctic *atricapillus* group. The latter occurs in North America and consists of *A.g. atricapillus* (Wilson 1812, type locality Philadelphia, Pennsylvania). The *atricapillus* group occurs over much of Alaska, Canada, and the mountains of the western and eastern United States. In addition to *A.g. atricapillus*, at least two other subspecies are currently, but variously, accepted—*A.g. laingi* (Taverner 1940, type locality Queen Charlotte Islands, British Columbia), which occurs on islands off the Canadian Pacific coast, and *A.g. apache* van Rossem (van Rossem 1938, type locality Chiricahua Mountains, Arizona), which occurs in the mountains. *A.g. laingi* is the subject of a separate petition action and is not further addressed in this notice.

Recognition of the *apache* subspecies in the American southwest is a subject of current debate. It is recognized by a number of scientists, but not by the American Ornithologists' Union. The U.S. Fish and Wildlife Service acknowledged the existence of *apache* as a subspecies in its 1992 administrative finding relative to the petition to list the northern goshawk. However, the Service now considers the issue of recognition of *apache* as a legitimate subspecies to be unresolved, and does not consider it a separate subspecies for purposes of this notice.

Information reviewed by the Service indicates that data regarding goshawk population trends is limited (Squires and Reynolds 1997), and migration or Christmas bird counts are difficult to interpret because of low numbers observed, biases inherent in the methodology, and irruptive migrations (Titus and Fuller 1990). However, Kennedy (1997) conducted a comprehensive review of available, peer-reviewed research, and found no evidence of a decline in goshawks in North America based on its range, demographics (density, fecundity, and survival) and population trends. Based on a variety of information from across North America, Kennedy concluded that there is no strong evidence to indicate that goshawk populations are declining, increasing or stable. She emphasizes two possible conclusions based on her analysis: 1) either the goshawk is not declining or 2) current sampling techniques are insufficient to detect population trends. Based on the best available information gathered for the Service's Status Review, the Service did not find evidence of a declining population trend for goshawks. The Service found that approximately 75 percent of the reported territories analyzed for its status review were discovered within the past 10 years. In those areas where intensive survey and monitoring efforts have been implemented, goshawks generally are found. The available data indicate that

goshawks remain widely distributed throughout their historic range in the western United States.

The habitat information gathered and reviewed by the Service indicates that changes have occurred in the distribution, amount and structural characteristics of mature forests throughout much of the western United States. In general, the primary change has been reduction of mature forest cover by logging, although other factors such as fire suppression and catastrophic fire have also been implicated. However, the extent to which goshawk populations are correlated with amounts of mature forest cover is unknown. Recent survey efforts continue to result in discovery of goshawks, even in areas of historic logging activity, which indicates that the species may not be uncommon, but rather is difficult to locate and adequately survey. The Service found no evidence that goshawk habitat is limiting the population, or that a significant curtailment of the species' habitat or range is occurring.

The information presented in the petition relies largely on the contention that the northern goshawk is dependent on large, unbroken tracts of ''old-growth'' and mature forest. However, the Service has found no evidence to support this claim. The Service found that while the goshawk typically does use mature forest or larger trees for nesting habitat, it appears to be a forest habitat generalist in terms of the types and ages of forests it will use to meet its life history requirements. Goshawks can use small patches of mature habitat to meet their nesting requirements within a mosaic of habitats of different age classes; a key factor appears to be availability of prey.

While timber management has been demonstrated to affect goshawks at least at local levels (Reynolds 1989, Crocker-Bedford 1990, Bright-Smith and Mannon 1994, Woodbridge and Detrich 1994, Beier and Drennan 1997, Desimone 1997), forest management practices, such as the use of controlled fire and selective thinning, also may make habitats more suitable to goshawks by opening up dense understory vegetation, creating snags, down logs, and woody debris, and creating other conditions conducive to goshawks and their prey (Reynolds *et al.* 1992, Graham *et al.* 1997).

Throughout much of the western United States, the nature and rate of decline in mature forest habitats on Federal lands has slowed significantly during the past decade. The Service estimates that 80 percent of goshawk habitat occurs on Federal forest lands. Public debate over management of Federal forest resources has resulted in regional forest management strategies, many of which focus on retention and restoration of mature forest habitats. These changes are reflected in declines of timber volume sold from National Forest lands in many western states. Although mature forest habitat continues to be harvested, the Service finds that, in general, habitat conditions on Federal lands are no longer declining as in previous decades, and are improving in many areas throughout the west.

In conclusion, the Service finds that while forest management (e.g., timber harvest and fire exclusion) has changed the vegetation characteristics throughout much of the western United States, the goshawk continues to be well-distributed throughout its historic range. The Service finds no evidence that the goshawk population is declining in the western United States, that habitat is limiting the overall population, that there are any significant areas of extirpation, or that a significant curtailment of the species' habitat or range is occurring. The petition relies largely on the contention that the goshawk is dependent on large, unbroken tracts of old-growth and mature forest in its assertion that the species is in danger of extinction. However, neither the petition nor other information available to the Service supports this claim. The Service found that while goshawks frequently use stands of old-growth and mature forest for nesting, overall the species appears to be a forest habitat generalist in terms of the variety and age-classes of forest types it uses to meet its life history requirements. Therefore, the Service finds that listing the northern goshawk in the contiguous United States west of the 100th meridian as threatened or endangered is not warranted because the best available information does not indicate that it is in danger of extinction or likely to become so in the foreseeable future.

References

A complete list of references used in preparation of this finding is available upon request from the U.S. Fish and Wildlife Service, Office of Technical Support (see **ADDRESSES** section).

Author

The primary author of this document is Catrina Martin, U.S. Fish and Wildlife Service, Office of Technical Support (see **ADDRESSES** section).

Authority

16 U.S.C. 1381–1487l; 16 U.S.C. 4201–4245; Pub L. 99–625, 100 Stat. 3500; unless otherwise noted.

Dated: June 22, 1998.

Jamie Rappaport Clark,

Director, U.S. Fish and Wildlife Service.

[FR Doc. 98–17151 Filed 6–26–98; 8:45 am]

BILLING CODE 4310–55–P

DEPARTMENT OF COMMERCE

National Oceanic and Atmospheric Administration

50 CFR Part 660

[I.D. 061898B]

RIN 0648–AK60

Fisheries Off West Coast States and in the Western Pacific; Western Pacific Precious Corals Fisheries; Amendment 3

AGENCY: National Marine Fisheries Service (NMFS), National Oceanic and Atmospheric Administration (NOAA), Commerce.

ACTION: Notice of availability of a fishery management plan amendment; request for comments.

SUMMARY: NMFS announces that the Western Pacific Fishery Management Council (Council) has submitted Amendment 3 to the Fishery Management Plan for the Precious Corals Fisheries of the Western Pacific Region (FMP) for Secretarial review. Amendment 3 would establish framework procedures for regulatory changes under the FMP.

DATES: Comments on Amendment 3 must be received on or before August 28, 1998.

ADDRESSES: Comments on Amendment 3 should be sent to, and copies of Amendment 3 are available from, Kitty Simonds, Executive Director, Western Pacific Fishery Management Council, 1164 Bishop St., Suite 1400, Honolulu, HI 96813.

FOR FURTHER INFORMATION CONTACT: Kitty Simonds at (808) 522–8220 or Alvin Katekaru, Fishery Management Specialist, Pacific Islands Area Office, NMFS at (808) 973–2985.

SUPPLEMENTARY INFORMATION: The Magnuson-Stevens Fishery Conservation and Management Act (Magnuson-Stevens Act) requires that each Regional Fishery Management Council submit any fishery management plan or plan amendment it prepares to NMFS for review and approval, disapproval, or partial approval. The Magnuson-Stevens Act also requires

that NMFS, upon receiving a fishery management plan or amendment, immediately publish a notice that the fishery management plan or amendment is available for public review and comment. NMFS will consider the public comments received during the comment period in determining whether to approve the fishery management plan or amendment.

Amendment 3 to the FMP would establish framework procedures for regulatory changes under the FMP. Under the proposed framework procedures, new management measures may be added through rulemaking if new information demonstrates that there are biological, social, or economic concerns in the precious coral permit areas. The framework procedures would authorize the implementation of measures that may affect the fishing season, classification of coral beds, harvest quotas for all management unit species, size restrictions, incidental catches and permit conditions. Each action taken under the framework process would entail documentation of the analysis of impacts of that action. To the extent appropriate, the Council would prepare regulations, regulatory analyses, environmental assessments, or other documents depending on the scope of the action, which framework process is being used, and the types and magnitude of impacts involved. Advance public notice, public discussion, and consideration of public comment would be required.

NMFS invites comments on proposed Amendment 3 through the end of the comment period. NMFS will consider the public comments received during the comment period in determining whether to approve the proposed amendment. A proposed rule to implement Amendment 3 has been submitted for Secretarial review and approval. NMFS expects to publish the proposed rule and request public comment on the proposed regulations in the near future. Public comments on the proposed rule must be received by August 28, 1998 to be considered in the approval/disapproval decision on Amendment 3.

Authority: 16 U.S.C. 1801 *et seq.*

Dated: June 23, 1998.

Gary C. Matlock,

Director, Office of Sustainable Fisheries, National Marine Fisheries Service.

[FR Doc. 98–17167 Filed 6–26–98; 8:45 am]

BILLING CODE 3510–22–F

Notices

Federal Register
Vol. 63, No. 124
Monday, June 29, 1998

This section of the FEDERAL REGISTER contains documents other than rules or proposed rules that are applicable to the public. Notices of hearings and investigations, committee meetings, agency decisions and rulings, delegations of authority, filing of petitions and applications and agency statements of organization and functions are examples of documents appearing in this section.

DEPARTMENT OF AGRICULTURE

Farm Service Agency

U.S. Warehouse Act Fees

AGENCY: Farm Service Agency, USDA.

ACTION: Notice.

SUMMARY: The purpose of this notice is to publish a schedule increasing the licensing and inspection fees to be charged warehouse operators under the United States Warehouse Act (USWA) and regulations with respect to: Cotton, grain, tobacco, wool, dry bean, nut, syrup, and cottonseed.

EFFECTIVE DATE: October 1, 1998.

FOR FURTHER INFORMATION CONTACT: Helen Linden, Warehouse and Inventory Division, Farm Service Agency, United States Department of Agriculture, 1400 Independence Avenue, SW, STOP 0553, Washington, DC 20250–0553, telephone (202) 690–4321, FAX: (202) 690–3123, E-Mail: Helen__Linden@wdc.fsa.usda.gov.

Background

Pursuant to the provisions of the USWA which regulates warehouse operations for the benefit of all depositors, the Secretary has the authority to license public warehouse operators. Warehouse operators that opt to have a USWA license understand that fees will be imposed to cover the costs of the program. Specifically, section 10 of the USWA (7 U.S.C. 251) mandates the imposition of fees for USWA licensed warehouses. The USWA provides, in part, that:

The Secretary of Agriculture * * * shall charge, assess, and cause to be collected a reasonable fee for (1) Each examination or inspection of a warehouse * * *; (2) each license issued to any person to classify, inspect, grade, sample, or weigh agricultural products stored or to be stored * * *; (3) each annual warehouse license issued to a warehouseman to conduct a warehouse * * *; and (4) each warehouse license amended, modified, extended, or reinstated * * *. Such fees shall cover, as nearly as practicable, the costs of providing such services and licenses, including administrative and supervisory costs * * *.

The USWA mandates fee collections to sustain the Federal warehouse licensing and examination programs. In keeping with the Department of Agriculture's strategic plan of making the USWA more self-sufficient, the Farm Service Agency (FSA) is raising USWA license and user fees to increase the amount of revenue generated to recover operational costs for the USWA in Fiscal Year 1999 (FY). The FY 99 fee adjustment reflects a general, across the board, 7.5 percent increase in fees for all USWA licensed warehouse operators.

The regulations used in administering USWA fees were last amended effective October 1, 1997, (62 FR 33582, June 20, 1997 and corrected at 62 FR 42234, August 6, 1997), at which time fee adjustments reflected increases of no greater than 10 percent for each type of commodity with the rate of increase depending on FSA's direct costs with respect to warehouse examinations for that commodity.

These regulations at 7 CFR parts 735 through 743 provide that USWA fees could be adjusted annually in order to cover, as nearly as practicable, the operating costs for the program.

Warehouse and Service License Fees

The fee for original issuance, reissuance, or duplication of a license for cotton, grain, tobacco, wool, dry beans, nut, syrup, and cottonseed is $80 for each license issued.

The fee charged to license individuals to inspect, sample, grade, classify, or weigh commodities is $35 for each service license issued.

Warehouse Annual and Inspection Fees

These fees are shown in the following tables by agricultural product. Inspection fees are assessed for each original examination or inspection, or reexamination or reinspection for modification of an existing license. Annual fees are assessed independently of inspection fees.

COTTON

[In bales]

Licensed capacity	Annual fee for each warehouse location with a CCC storage agreement	Annual fee for each warehouse location without a CCC storage agreement
1–20,000	$590	$1,075
20,001–40,000	770	1,400
40,001–60,000	945	1,720
60,001–80,000	1,185	2,155
80,001–100,000	1,480	2,690
100,001–120,000	1,775	3,225
120,001–140,000	2,070	3,765
140,001–160,000	2,365	4,300
160,001+	*2,365	**4,300

*Plus $60 per 5,000 bale capacity above 160,000 bales or fraction thereof.

**Plus $110 per 5,000 bale capacity above 160,000 bales or fraction thereof.

Inspection fees will be charged at the rate of $80 for each 1,000 bales of licensed capacity, or fraction thereof, but in no case less than $160 nor more than $1,600.

GRAIN

[In bushels]

Licensed capacity	Annual fee for each warehouse location with a CCC storage agreement	Annual fee for each warehouse location without a CCC storage agreement
1–150,000	$155	$280
150,001–250,000	310	565
250,001–500,000	460	835
500,001–750,000	620	1,125
750,001–1,000,000	770	1,400
1,000,001–1,200,000	925	1,680
1,200,001–1,500,000	1,075	1,955
1,500,001–2,000,000	1,230	2,235
2,000,001–2,500,000	1,385	2,520
2,500,001–5,000,000	1,535	2,790
5,000,001–7,500,000	1,695	3,080
7,500,001–10,000,000	1,850	3,365
10,000,001+	*1,850	**3,365

*Plus $50 per million bushels above 10,000,000 or fraction thereof.

**Plus $90 per million bushels above 10,000,000 or fraction thereof.

Inspection fees will be charged at the rate of $16 for each 10,000 bushels of licensed capacity, or fraction thereof, but in no case less than $160 nor more than $1,600.

DRY BEANS

[In hundredweight]

Licensed capacity	Annual fee
100–90,000	$770
90,001–150,000	1,075
150,001–300,000	1,385
300,001–450,000	1,695
450,001–600,000	2,000
600,001–720,000	2,305
720,001–900,000	2,620
900,001–1,200,000	2,925
1,200,001–1,500,000	3,225
1,500,001–3,000,000	3,535
3,000,001+	3,845

Inspection fees will be charged at the rate of $16 for each 1,000 hundredweight of licensed capacity, or fraction thereof, but in no case less than $160 nor more than $1,600.

Tobacco and wool

Annual fee: $16 for each 100,000 pounds of licensed capacity, or fraction thereof, but in no case less than $620.

Inspection fee: $16 for each 100,000 pounds of licensed capacity, or fraction thereof, but in no case less than $160 nor more than $1,600.

Nuts

Annual fee: $14 for each 100 short tons of licensed capacity, or fraction thereof, but in no case less than $620.

Inspection fee: $8 for each 100 short tons of licensed capacity, or fraction thereof, of peanuts and $14 for each 1,000 hundredweight, or fraction thereof, of other nuts, but in no case less than $160 nor more than $1,600.

Syrup

Annual fee: $6 for each 5,000 gallons of licensed capacity, or fraction thereof, but in no case less than $620.

Inspection fee: $6 for each 5,000 gallons of licensed capacity, or fraction thereof, but in no case less than $160 nor more than $1,600.

Cottonseed

Annual fee: $16 for each 1,000 short tons of licensed capacity, or fraction thereof, but in no case less than $620.

Inspection fee: $16 for each 1,000 short tons of licensed capacity, or fraction thereof, but in no case less than $160 nor more than $1,600.

Signed at Washington, DC, on June 23, 1998.

Keith Kelly,

Adminisrator, Farm Service Agency.

[FR Doc. 98–17179 Filed 6–26–98; 6:46 am]

BILLING CODE 3410–05–M

DEPARTMENT OF AGRICULTURE

Forest Service

Olympic Provincial Interagency Executive Committee (PIEC), Advisory Committee

AGENCY: Forest Service, USDA.

ACTION: Notice of meeting.

SUMMARY: The Olympic PIEC Advisory Committee will meet on July 10, 1998 at the Olympic Natural Resources Center, 1455 South Forks Avenue, Forks, Washington. The meeting will begin at 9:30 a.m. and continue until 3:00 p.m. Agenda items to be covered include: (1) Update and discussion on reorganization plans for the Olympic Forest; (2) Effectiveness Monitoring Pilot Project: update from subcommittee, presentation by Quileute member on potential use of Soleduck drainage and Olympic Natural Resources Center on possible partnership; (3) Review video on Sequim Elk Herd Management (4) Review Adaptive Management Area Draft Guide; (5) Update on Soleduck Ranger District projects and activities. Olympic Province Committee meetings are open to the public. Interested citizens are encouraged to attend.

FOR FURTHER INFORMATION CONTACT: Direct questions regarding this meeting to Kathy Snow, Province Liaison, USDA, Quilcene Ranger District, P.O. Box 280, Quilcene, WA 98376, (360) 765–2211.

Dated: June 23, 1998.

Claire Lavendel,

Acting Forest Supervisor.

[FR Doc. 98–17207 Filed 6–26–98; 8:45 am]

BILLING CODE 3410–11–M

DEPARTMENT OF AGRICULTURE

Grain Inspection, Packers and Stockyards Administration

Amendment to Certification of Central Filing System—Oklahoma

The Statewide central filing system of Oklahoma has been previously certified, pursuant to Section 1324 of the Food Security Act of 1985, on the basis of information submitted by the Oklahoma Secretary of State, for farm products produced in that State (52 FR 49056, December 29, 1987).

The certification is hereby amended on the basis of information submitted by Tom Cole, Secretary of State, for additional farm products used or produced in farming operations, or a product of such crop or livestock in its

unmanufactured state that is in the possession of a person engaged in farming operations in that State as follows:

teff, kudu, gemsbok, eland, gnu

This is issued pursuant to authority delegated by the Secretary of Agriculture.

Authority: Sec. 1324(c)(2), Pub. L. 99–198, 99 Stat. 1535, 7 U.S.C. 1631(c)(2); 7 CFR 2.22(a)(3)(v), 2.81(a)(5), 55 FR 22795.

Dated: June 22, 1998.

Harold W. Davis,

Deputy Administrator, Packers and Stockyards Programs.

[FR Doc. 98–17182 Filed 6–26–98; 8:45 am]

BILLING CODE 3410–EN–P

ASSASSINATION RECORDS REVIEW BOARD

Sunshine Act Meeting

DATE: July 7–8, 1998.

PLACE: ARRB, 600 E Street, NW, Washington, DC.

STATUS: Closed: July 7, 1998, 9:00 a.m.; Open: July 8, 1998, 10:00 a.m.–12:00 noon and 1:30 p.m.–4:00 p.m.

MATTERS TO BE CONSIDERED:

Closed Meeting:

1. Review and Accept Minutes of Closed Meeting
2. Review of Assassination Records
3. Other Business

Open Meeting:

1. Discussion of Final Report
2. Review and Accept Minutes of June 4, 1998 Open Meeting
3. Other Business

CONTACT PERSON FOR MORE INFORMATION: Eileen Sullivan, Press Officer, 600 E Street, NW, Second Floor, Washington, DC 20530. Telephone: (202) 724–0088; Fax: (202) 724–0457.

T. Jeremy Gunn,

General Counsel.

[FR Doc. 98–17322 Filed 6–25–98; 11:12 am]

BILLING CODE 6118–01–P

COMMISSION ON CIVIL RIGHTS

Agenda and Notice of Public Meeting of the Maryland Advisory Committee

Notice is hereby given, pursuant to the provisions of the rules and regulations of the U.S. Commission on Civil Rights, that a meeting of the Maryland Advisory Committee to the Commission will convene at 9:30 a.m. and adjourn at 4:30 p.m. on July 16, 1998, at the University of Maryland at Baltimore School of Law—Moot Court Room, 500 West Baltimore Street, Baltimore, Maryland 21201. The Committee will hold a forum for Korean Americans, government officials, and others to speak on the topic, ''City Services, Public Safety, and the Justice System: Do Korean American Storeowners in Baltimore Get Equal Treatment?''

Persons desiring additional information, or planning a presentation to the Committee, should contact Committee Chairperson Chester L. Wickwire, 410–825–8949, or Ki-Taek Chun, Director of the Eastern Regional Office, 202–376–7533 (TDD 202–376–8116). Hearing-impaired persons who will attend the meeting and require the services of a sign language interpreter should contact the Regional Office at least ten (10) working days before the scheduled date of the meeting.

The meeting will be conducted pursuant to the provisions of the rules and regulations of the Commission.

Dated at Washington, DC, June 19, 1998.

Carol-Lee Hurley,

Chief, Regional Programs Coordination Unit.

[FR Doc. 98–17237 Filed 6–26–98; 8:45 am]

BILLING CODE 6335–01–P

DEPARMENT OF COMMERCE

International Trade Administration

Initiation of Antidumping and Countervailing Duty Administrative Reviews and Request for Revocation in Part

AGENCY: Import Administration, International Trade Administration, Department of Commerce.

ACTION: Notice of initiation of antidumping and countervailing duty administrative reviews and request for revocation in part.

SUMMARY: The Department of Commerce has received requests to conduct administrative reviews of various antidumping and countervailing duty orders and findings with May anniversary dates. In accordance with the Department's regulations, we are initiating those administrative reviews. The Department of Commerce also received a request to revoke in part one antidumping duty order.

EFFECTIVE DATE: June 29, 1998.

FOR FURTHER INFORMATION CONTACT: Holly A. Kuga, Office of AD/CVD Enforcement, Import Administration, International Trade Administration, U.S. Department of Commerce, 14th Street and Constitution Avenue, NW, Washington, DC 20230, telephone: (202) 482–4637.

SUPPLEMENTARY INFORMATION:

Background

The Department has received timely requests, in accordance with 19 CFR 351.213(b)(1997), for administrative reviews of various antidumping and countervailing duty orders and findings with May anniversary dates. The Department also received a timely request to revoke in part the antidumping duty order on Dynamic Random Access Memory semiconductors (''DRAMs'') from the Republic of Korea.

Initiation of Reviews

In accordance with 19 CFR 331.221(c)(1)(i), we are initiating administrative reviews of the following antidumping and countervailing duty orders and findings. We intend to issue the final results of these reviews not later than May 31, 1999.

Antidumping duty proceedings	Period to be revised
Brazil: Orange Juice, A–351–605	5/1/97–4/30/98
Branco Peres Citrus S.A.	
CYM Citrus S.A.	
Cambuhy Citrus Comercial e Exportadora Ltda.	
Citrovita Agroindustrial S.A.	
Frutax Industria e Comercio Ltda.	
Sucorrico S.A.	
India: Certain Welded Carbon Steel Pipes and Tubes, A–533–502	5/1/97–4/30/98
Rajinder Pipes Ltd.	

Antidumping duty proceedings	Period to be revised
Republic of Korea: DRAMs, A–580–812	5/1/97–4/30/98
LG Semicon Co., Ltd.	
Hyundai Electronics Industries Co.	
G5 Corporation	
Taiwan: Certain Welded Carbon Steel Pipe & Tubes, A–583–008	5/1/97–4/30/98
Yieh Hsing Enterprise Co., Ltd.	
Yun Din Steel	
Kao Hsing Chang Iron & Steel Corporation	
Yieh Loong Co., Ltd.	
Far East Machinery Co., Ltd.	
Tai Feng Industries	
An Mau Steel Co., Ltd.	
Taiwan: Polyvinyl Alcohol, A–583–824	5/1/97–4/30/98
Chang Chun Petrochemical Co., Ltd.	
E.I. du Pont De Nemours & Co., Inc.	
Perry Chemical Corp.	

Anti-friction bearings proceedings and firms	Period/Class or kind
France: A–427–801	5/1/97–4/30/98
SKF France (including all relevant affiliates)	All
Societe Nouvelle de Roulements (SNR)	All
SNFA S.A.	All
Rolfer LDA	Ball
Minetti	Ball
Motovario	Ball
Rodaindustria SA	Ball
Rodiandustria Vigo SA	Ball
Bucher-Guyer AG	Ball
Alfa Team Gmbh	Ball
D & R Technisher Grosshandel	Ball
Frolich & Dorken GmbH	Ball
RMV Walzalager Vetr. GmbH	Ball
Wyko Export	Ball
Germany: A–428–801	5/1/97–4/30/98
FAG Kugelfischer George Schaefer AG	All
INA Walzlager Schaeffler KG	All
SKF GmbH (including all relevant affiliates)	All
Torrington Nadellager GmbH	Ball & Cylindrical
Rolfer LDA	Ball & Cylindrical
Minetti	Ball & Cylindrical
Motovario	Ball & Cylindrical
Rodaindustria SA	Ball & Cylindrical
Rodiandustria Vigo SA	Ball & Cylindrical
Bucher-Guyer AG	Ball & Cylindrical
Alfa Team Gmbh	Ball & Cylindrical
D & R Technisher Grosshandel	Ball & Cylindrical
Frolich & Dorken GmbH	Ball & Cylindrical
RMV Walzlager Vetr. GmbH	Ball & Cylindrical
Wyko Export	Ball & Cylindrical
Italy: A–475–801	5/1/97–4/30/98
SKF Industrie S.p.A. (including all relevant affiliates)	Ball
FAG Italia S.p.A. (including all relevant affiliates)	Ball & Cylindrical
SOMECAT S.p.A.	Ball & Cylindrical
Rolfer LDA	Ball
Minetti	Ball
Motovario	Ball
Rodaindustria SA	Ball
Rodiandustria Vigo SA	Ball
Bucher-Guyer AG	Ball
Alfa Team Gmbh	Ball
D & R Technisher Grosshandel	Ball
Frolich & Dorken GmbH	Ball
RMV Walzlager Vetr. GmbH	Ball
Wyko Export	Ball
Japan: A–588–804	5/1/97–4/30/98
Koyo Seiko Co., Ltd.	All
Nachi-Fujikoshi Corporation	All
Nippon Pillow Block Sales Company, Ltd.	All
NSK Ltd. (formerly Nippon Seiko K.K.)	All
NTN Corporaiton	All
Romania: A–485–801	5/1/97–4/30/98

Anti-friction bearings proceedings and firms	Period/Class or kind
Technoimportexport, S.A. (TIE)	Ball
Singapore: A–559–801	5/1/97–4/30/98
NMB Singapore Ltd./Pelmec Industies (Pte.) Ltd.	Ball
Sweden: A–401–801	5/1/97–4/30/98
SKF Sverige AB	Ball & Cylindrical
Rolfer LDA	Ball
Minetti	Ball
Motovario	Ball
Rodaindustria SA	Ball
Rodiandustria Vigo SA	Ball
Bucher-Guyer AG	Ball
Alfa Team GmbH	Ball
D & R Technisher Grosshandel	Ball
Frolich & Dorken GmbH	Ball
RMV Walzlager Vetr. GmbH	Ball
Wyko Export	Ball
The United Kingdom: A–412–801	5/1/97–4/30/98
NSK Bearings Europe Ltd./RHP Bearings Ltd.	Ball & Cylindrical
Barden Corporation	Ball & Cylindrical
FAG (U.K.) Limited	Ball & Cylindrical
SNFA Bearings Limited	Ball & Cylindrical

Countervailing Duty Proceedings

None.

Suspension Agreements

None.

During any administrative review covering all or part of a period falling between the first and second or third and fourth anniversary of the publication of an antidumping duty order under § 351.211 or a determination under § 351.218(d) (sunset review), the Secretary, if requested by a domestic interested party within 30 days of the date of publication of the notice of initiation of the review, will determine whether antidumping duties have been absorbed by an exporter or producer subject to the review if the subject merchandise is sold in the United States through an importer that is affiliated with such exporter or producer. The request must include the name(s) of the exporter or producer for which the inquiry is requested.

For transition orders defined in section 751(c)(6) of the Act, the Secretary will apply paragraph (j)(1) of this section to any administrative review initiated in 1996 or 1998 (19 CFR 351.213(j)(1–2)).

Interested parties must submit applications for disclosure under administrative protective orders in accordance with 19 CFR 351.305.

These initiations and this notice are in accordance with section 751(a) of the Tariff Act of 1930, as amended (19 U.S.C. 1675(a)), and 19 CFR 351.221(c)(1)(i).

Dated: June 22, 1998.

Maria Harris Tildon,

Acting Deputy Assistant Secretary for Import Administration.

[FR Doc. 98–17137 Filed 6–26–98; 8:45 am]

BILLING CODE 3510–DS–M

DEPARTMENT OF COMMERCE

International Trade Administration

[A–489–501]

Notice of Final Results and Partial Rescission of Antidumping Duty Administrative Review: Certain Welded Carbon Steel Pipe and Tube From Turkey

AGENCY: Import Administration, International Trade Administration, Department of Commerce.

SUMMARY: On February 6, 1998, the Department of Commerce published the preliminary results of its administrative review of the antidumping duty order on certain welded carbon steel pipe and tube from Turkey. The review covers shipments of this merchandise to the United States by one respondent during the period May 1, 1996, through April 30, 1997. Based on our analysis of comments received, these final results differ from the preliminary results. The final results are listed below in the section ''Final Results of Review.''

EFFECTIVE DATE: June 29, 1998.

FOR FURTHER INFORMATION CONTACT: Charles Riggle or Kris Campbell, Office of AD/CVD Enforcement 2, Import Administration, International Trade Administration, U.S. Department of Commerce, 14th Street and Constitution Avenue, NW, Washington, DC 20230; telephone: (202) 482–0650 and (202) 482–3813, respectively.

SUPPLEMENTARY INFORMATION:

Applicable Statute and Regulations

Unless otherwise indicated, all citations to the statute are references to the provisions effective January 1, 1995, the effective date of the amendments made to the Tariff Act of 1930 (the Act) by the Uruguay Round Agreements Act (URAA). In addition, unless otherwise indicated, all citations to the Department of Commerce's (the Department's) regulations refer to the regulations last codified at 19 CFR part 353. While the Department's revised regulations, as codified at 19 CFR part 351 (Antidumping Duties; Countervailing Duties, 62 FR 27296 (May 19, 1997) (''revised regulations''), do not govern this review, they do describe the Department's practice where cited in this notice.

Background

This review covers one manufacturer/exporter, the Borusan Group (Borusan), of merchandise subject to the antidumping duty order on certain welded carbon steel pipe and tube from Turkey. On February 6, 1998, the Department published the preliminary results of this review. *See Notice of Preliminary Results of Antidumping Duty Administrative Review: Certain Welded Carbon Steel Pipe and Tube from Turkey*, 63 FR 6155 (*Preliminary Results*). On March 9, 1998, we received case briefs from Allied Tube & Conduit Corporation and Wheatland Tube Company (collectively, ''the petitioners'') and from Borusan. We

received rebuttal briefs from both parties on March 16, 1998.

Scope of Review

Imports covered by this review are shipments of certain welded carbon steel pipe and tube products with an outside diameter of 0.375 inch or more but not over 16 inches, of any wall thickness. Imports of subject merchandise are currently classifiable under the following Harmonized Tariff Schedule of the United States (HTSUS) subheadings: 7306.30.10.00, 7306.30.50.25, 7306.30.50.32, 7306.30.50.40, 7306.30.50.55, 7306.30.50.85, 7306.30.50.90. These products, commonly referred to in the industry as standard pipe and tube, are produced to various American Society for Testing and Materials (ASTM) specifications, most notably A–120, A–53 or A–135. Although the HTSUS subheadings are provided for convenience and customs purposes, the written description of the scope of this proceeding is dispositive.

Partial Rescission

We originally initiated a review of three companies: Borusan, Yucelboru Ihracat Ithalat ve Pazarlama A.S./ Cayirova Boru Sanayi ve Ticaret A.S. (Yucelboru), and Erbosan Erviyas Boru Sanayii ve Ticaret A.S. (Erbosan). *See Notice of Initiation of Antidumping Duty Administrative Review*, 62 FR 35154 (June 30, 1997). However, as noted in the preliminary results, Yucelboru and Erbosan notified us that they had no shipments of subject merchandise during the period of review (POR). Although we inadvertently did not publish a notice of rescission at the time of the preliminary results, we did confirm with the Customs Service that this was correct and so stated in the preliminary results. *See Preliminary Results* at 6155. We received no comments concerning either of these companies for the final results. Therefore, consistent with our practice (*see, e.g., Certain Fresh Cut Flowers From Colombia; Final Results and Partial Rescission of Antidumping Duty Administrative Review*, 62 FR 53287, 53288 (October 14, 1997), we have rescinded our review of the two companies with no shipments during the POR. *See also* 19 CFR 351.213(d)(3) of the Department's revised regulations.

Fair Value Comparisons

We calculated export price (EP) and normal value based on the same methodology used in the preliminary results. However, as discussed further below, due to a change in our matching methodology *vis a vis* sales disregarded as below cost, we were able to match all U.S. sales to sales of similar merchandise sold in the home market without resorting to constructed value (CV).

On January 8, 1998, the Court of Appeals of the Federal Circuit issued a decision in *Cemex* v. *United States*, 1998 WL 3626 (Fed. Cir.) (*Cemex*). In that case, based on the pre-URAA Act, the Court discussed the appropriateness of using CV as the basis for foreign market value (normal value) when the Department finds home market sales to be outside the ''ordinary course of trade.''

Although this issue was not raised by any party in this proceeding, in light of the *Cemex* decision the Department has reconsidered its practice with respect to any sales found to be outside the ''ordinary course of trade.'' Under the URAA, such sales now include sales disregarded as below cost. *See* Section 771(15). In accordance with *Cemex*, the Department has determined that it would be inappropriate to resort directly to CV, in lieu of comparison market sales, as the basis for normal value where sales of merchandise identical to, or most similar to, that sold in the United States are disregarded as below cost. Instead, we will use sales of similar merchandise, if such sales exist, and will resort to CV as the basis for normal value only when there are no above-cost sales that are otherwise suitable for comparison. Therefore, in this proceeding, when making comparisons in accordance with section 771(16) of the Act, we considered all products sold in the home market as described in the ''Scope of the Review'' section of this notice, above, that were in the ordinary course of trade for purposes of determining appropriate product comparisons to U.S. sales. Where there were no contemporaneous sales of identical merchandise in the home market made in the ordinary course of trade to compare to U.S. sales, we were able to compare U.S. sales to contemporaneous sales of the most similar foreign like product made in the ordinary course of trade, based on the matching characteristics identified in the preliminary results. *See Preliminary Results* at 6156.

Cost of Production

As discussed in the preliminary results, we conducted an investigation to determine whether Borusan made home market sales of the foreign like product during the POR at prices below its cost of production (COP) within the meaning of section 773(b)(1) of the Act.

We calculated the COP following the same methodology as in the preliminary results, with the following exceptions.

1. While we based our calculation of interest expenses on the interest expenses of the consolidated Borusan Group companies, we have allocated this expense (which was reported on an annual basis) to each month of the POR using the ratio of monthly to annual interest expenses for the four largest of the Borusan Group companies, consistent with the 1994–95 review. We have also recalculated Borusan's amortized foreign exchange losses. *See* Comment 7.
2. We have valued purchases of coil and zinc by Borusan's mills from affiliated parties at the higher of the cost of producing the input, the transfer price, or the market price. *See* Comment 8.
3. We added packing to the cost of manufacturing (COM) in order not to understate the calculation of general and administrative expenses (G&A) and interest, because the cost of goods sold (COGS) used in the denominator to calculate the G&A and interest expense factor includes packing. *See* Comment 9.
4. We deducted imputed credit expenses from CV. *See* Comment 10.
5. We corrected a clerical error regarding indexation of monthly costs. *See* Final Results Analysis Memorandum from Case Analyst to File: Pipe and Tube from Turkey (June 8, 1998) (Final Results Analysis Memorandum).

Analysis of Comments Received

We gave interested parties an opportunity to comment on the preliminary results. As noted above, we received comments and rebuttal comments from the petitioners and from Borusan.

Comment 1: Level of Trade

The petitioners submit the following comments regarding the level-of-trade analysis in the preliminary results: (1) the Department incorrectly determined that there are two levels of trade in the home market without sufficient record evidence that home market sales differ significantly in terms of the stage of marketing involved (see Comment 1A, below); (2) because there is only one home market level of trade, the Department incorrectly granted a level-of-trade adjustment when comparing U.S. sales to one of the two purported home market levels (see Comment 1A, below); (3) even if the Department finds two home market levels of trade, no adjustment should be made because Borusan has not demonstrated a causal

link between (a) differences in the marketing stages between the two levels and (b) pricing differences between the two levels, *i.e.*, it has not shown that marketing differences at the two purported levels have caused pricing differences at the two levels (see Comment 1B, below); and (4) if a level-of-trade adjustment is granted, it should be calculated on a reseller-specific basis (see Comment 1C, below).

Comment 1A—Identification of Home Market Levels of Trade

The petitioners state that there is only one level of trade in the home market because there are no significant differences in the stage of marketing for any of Borusan's purported levels of trade.[1] The petitioners contend that, based on an analysis of the customer class and the selling functions involved, LOT C sales should not be considered as a separate level of trade.

The petitioners first emphasize that the type of customer is an important factor in the level-of-trade analysis. Referencing the preamble to the Department's revised regulations (Preamble to Antidumping Duties; Countervailing Duties, 62 FR 27296, 27371, (May 19, 1997) (Preamble)) and *Gray Portland Cement and Clinker from Mexico: Final Results of Antidumping Duty Administrative Review*, 62 FR 17148, 17156 (April 9, 1997) (*Mexican Cement*), the petitioners state that different levels of trade necessarily involve purchasers at different places in the chain of distribution. According to the petitioners, Borusan's mill direct sales at LOT A, back-to-back sales through resellers at LOT B, and reseller inventory sales at LOT C all involve sales to end users. The petitioners submit that Borusan has shown only that there are sales to different types of end users at all three claimed levels of trade, and argue that distinctions among types of end users are not relevant to a determination regarding whether such customers occupy different places in the chain of distribution.

Regarding selling functions, the petitioners contend that four of the 12 claimed selling functions as reported by Borusan are not selling functions at all, and maintain that the remaining eight do not show any material difference in the nature or level of selling function being provided. The petitioners claim that inventory maintenance is the only significant selling function present in LOT C and not in LOT A/B. Even here, however, the petitioners contend that LOT A/B sales also involve maintaining inventory at the mill, and argue that any difference in the inventory maintenance at the two levels is not significant in terms of the level-of-trade analysis. Citing *Notice of Final Determination of Sales at Less Than Fair Value: Certain Pasta from Italy*, 61 FR 30326, 30337 (June 14, 1996) (*Pasta from Italy*), the petitioners assert that mere differences in the degree to which a particular selling function is performed are given little weight in establishing separate levels of trade. The petitioners add that it is rare that the Department would find that any single selling function is so significant as to warrant a finding of different levels of trade, citing Preamble to Antidumping Duties; Countervailing Duties; Proposed Regulations, 61 FR 7308, 7348 (February 27, 1996) (Proposed Regulations). The petitioners conclude that, since LOT C sales are not made at a level of trade separate from LOT A/B, no adjustment should be made for comparisons involving LOT C sales.

Borusan responds that, although it disagrees with the Department's determination to collapse LOTs A and B, the Department should continue to find at least two levels of trade (LOT A/B and LOT C) because Borusan has adequately demonstrated the existence of separate and distinct levels of trade in the home market. Borusan characterizes its home market channels of distribution as follows: LOT A involves made-to-order sales direct from the mill to sophisticated, unaffiliated distributor/resellers at high volumes; LOT B sales are made through affiliated resellers primarily to unaffiliated distributors, on an FOB-mill basis where the merchandise is shipped directly to the customers without the merchandise entering the resellers' inventory; and, LOT C sales are made by the resellers out of locally maintained forward inventory to small local retailers and end users.

Borusan argues that its sales at LOT C involve several qualitatively and quantitatively different selling functions than those involved in LOT A/B. Principally, Borusan claims, LOT C sales are made out of pre-positioned inventory from regional warehouses instead of directly from the mill. According to Borusan, this sales process does not involve only inventory maintenance, but also requires the performance of a number of additional functions (and the incurrence of certain additional selling expenses) at the LOT C level, including forecasting of regional demand for different products, inventory planning, placing orders with the mill, making arrangements for shipping from the mill, and incurring inventory carrying costs during the holding period. Borusan argues further that, since LOT C sales are routinely made to small, local retailers and end-users, LOT C resellers are involved in customer education and problem-solving, and providing advice on suitability, uses, and characteristics of Borusan's products.

Finally, with respect to the petitioners' argument that inventory maintenance occurs at both LOT A/B and LOT C, Borusan notes that LOT C involves the pre-positioning of forward inventory, a selling function that the Department has recognized as both significant in and of itself, and distinct from the inventory maintenance that occurs at the mill, citing *Pasta from Italy* at 30341–30342.

DOC Position: We continue to find that there are two home market levels of trade, LOT A/B and LOT C. We also find that LOT C involves a more remote level than LOT A/B. For these final results, we have continued to match U.S. sales first to LOT A/B; where we matched U.S. sales to LOT C, we have granted a level-of-trade adjustment, as discussed further in our response to Comments 1B and 1C below.

In order to find that sales are made at different levels of trade, we must determine that such sales involve different stages of marketing. *See* 19 CFR 351.412(b)(2). As a threshold matter, we analyze selling functions to determine if the levels of trade identified by a party are meaningful. Preamble at 27371. Our examination of the record evidence in this case confirms that, consistent with our preliminary results and with the final results of the 1994–95 review,[2] there are significant differences in the selling functions involved in LOT A/B sales in comparison with those involved in LOT C sales.

At LOT A/B, Borusan makes home market sales directly from the mill to large, sophisticated customers or, in a

[1] Borusan initially claimed three home market levels of trade—sales shipped directly from the mill to distributors/wholesalers (LOT A, ''mill direct''), sales made by affiliated resellers that also involve direct shipment from the mill to the customer (LOT B, ''reseller back-to-back''), and sales made by affiliated resellers out of locally maintained forward inventory (LOT C, ''reseller inventory sales''). As in the 1994–95 review, we collapsed LOTs A and B in the preliminary results, but found that LOT C sales were made at a level of trade separate from LOT A/B sales. Contrary to the 1994–95 review, however, we found a pattern of consistent price differences between the two levels, and made a level-of-trade adjustment when comparing U.S. sales with LOT C sales. *See Preliminary Results* at 6158; *see also Notice of Final Results of Antidumping Duty Administrative Review: Certain Welded Carbon Steel Pipe and Tube from Turkey*, 61 FR 69067, 69068–69069 (December 31, 1996) (*1994–95 Final Results*).

[2] No review was conducted with respect to the 1995–96 period.

'back-to-back' manner, where the sale is made by an affiliated reseller who does not take the merchandise into its inventory. In both instances, sales are made on an FOB-mill basis, and Borusan's customers make their own transportation arrangements regarding delivery of the merchandise from the mill. At LOT C, Borusan: (1) makes low-quantity sales to smaller customers through affiliated resellers who take the merchandise into inventory prior to the sale; (2) provides delivery services once the sale is made; and (3) maintains more intensive and frequent interactions with the customer. Thus, contrary to the petitioners' assertions, we find that there is more than one significant selling function that occurs at LOT C and not at LOT A/B. We discuss each in turn, below.

First, while it is not the only difference between LOT C sales and LOT A/B sales, inventory maintenance is a principal selling function that distinguishes these levels. Since LOT C sales are made out of stock, the affiliated resellers at LOT C have the responsibility of storing merchandise before purchasers have been found. The additional responsibility of maintaining merchandise in inventory also gives rise to related selling functions that are performed at LOT C. These include forecasting of regional demand for different products, inventory planning, placing orders with the mill, and incurring inventory carrying costs during the holding period. We also note that, in taking merchandise into inventory at LOT C, Borusan's affiliated resellers perform delivery-related functions that are not performed at LOT A/B, including: (1) arranging for shipment of merchandise involved in LOT C sales from the mill to the affiliated reseller's warehouse; and (2) providing immediate local delivery of such pre-positioned inventory once the sale is made to the final customer. *See* Borusan Questionnaire Response Section A (Borusan section A response) at 14 (resellers making LOT C sales ''specialize in providing immediate local delivery of standard grades which they keep in inventory'').

The additional forward warehousing and related activities performed by the affiliated resellers in making LOT C sales, as described above, constitute a distinct set of selling activities separate from any inventory maintenance performed at the mill. Thus, we disagree with the petitioners' contention that, since some form of inventory maintenance is conducted at each level of trade, any differences in this selling function are insufficient to support a finding of different levels of trade. Considering the additional selling functions associated with maintaining inventory at the affiliated reseller's warehouse for LOT C sales, we do not accept the petitioners' claim that the inventory maintenance performed at Borusan's mills is so similar to the reseller forward warehousing performed by affiliated resellers making LOT C sales as to render the differences in inventory maintenance between LOT A/B and LOT C sales insignificant for our analysis.

In addition to the inventory-and delivery-related selling activities described above, LOT C sales, which are typically smaller-volume sales, involve customer-based selling activities specific to the customers involved in such sales, which, as further discussed below, differ in the aggregate from the customers served by LOT A/B. These include customer education and advice on the suitability, uses, and characteristics of Borusan's products.

Based on the above analysis of selling activities, we have determined that there are meaningful distinctions between LOT A/B and LOT C. Aside from selling functions, we also consider the type of customer and the level of selling expenses in determining whether sales are made at different stages of marketing. *See* Preamble at 2731. Regarding the petitioners' arguments with respect to customer class, while we agree with the petitioners that the type of customer is an important indicator in identifying levels of trade (*id.*), we disagree with their assertion that the fact that both levels of trade involve some sales to end-users requires a finding that there are no customer differences between these levels. First, as a point of clarification, Borusan's LOT C sales are made not only to end users, but also to local distributors and small retailers. Second, the relevant standard, regardless of customer labels, is whether the customers involved at each purported level of trade constitute purchasers at different stages in the chain of distribution. *See Antifriction Bearings from France et al.; Final Results of Antidumping Duty Administrative Reviews*, 62 FR 54053, 54055 (October 17, 1997) (*AFBs 1995–96*).

The record evidence before us indicates that LOT C customers occupy a different place in the chain of distribution than do LOT A/B customers. At LOT C, the affiliated resellers tend to make sales in small quantities (''sometimes just a few pieces of pipe at a time'') to these customers. Borusan section A response at 13. In contrast, Borusan makes mill direct sales only to the following customers: affiliated companies, customers requiring special technical services, or customers located in Istanbul that purchase at high volume. *Id.* at 12.

Finally, with respect to the level of selling expenses involved at each channel of distribution, our examination of the expenses reported on home market sales indicates that, as Borusan claims, the per-unit indirect selling expenses are higher for sales made through LOT C than for those made at LOT A/B. Consistent with the Department's practice and regulations, we have considered this as an additional factor in our determination that LOT C is separate from, and more advanced than, LOT A/B.

Comment 1B—Price Differences Between Levels of Trade

The petitioners contend that, even if the Department correctly determined that Borusan's LOT C sales were made at a different level of trade than its LOT A/B sales, the Department erred in granting a level-of-trade adjustment with respect to comparisons made to LOT C sales. According to the petitioners, Borusan has not demonstrated that any price differences that exist between LOT A/B and LOT C are due to the difference in level of trade. The petitioners note that the Statement of Administrative Action accompanying the URAA (SAA) provides that the Department will grant a level-of-trade adjustment only where there is a difference in level of trade and the difference affects price comparability. Therefore, the petitioners claim, the burden is on Borusan to demonstrate a ''causal link'' between the difference in selling functions and the difference in prices.

The petitioners argue that, in this case, one likely reason that prices for sales at LOT C are higher than at LOT A/B is because of the smaller volumes involved in LOT C sales. In this respect, the petitioners reference the SAA (at 830) for the proposition that the Department must ''ensure that a percentage difference in price is not more appropriately attributable to differences in the quantities purchased in individual sales.'' The petitioners also suggest that another factor in higher LOT C prices is the fact that trade discounts are offered at LOT A/B but not at LOT C. The petitioners conclude that, because Borusan has made no effort to discount the impact of non-level-of-trade factors that account for the difference in prices, it is not entitled to a level of trade adjustment.

Borusan responds that there is no provision in the statute or regulations that requires that there be a causal link

between different selling functions and differences in prices. Rather, Borusan asserts, after finding separate levels of trade, the Department need only find that a pattern of price differences exists at different levels of trade, which allows the presumption that the price differences are attributable to different levels of trade. Borusan agrees in part that the price differences here arise because of a difference in quantities sold at each level; however, Borusan disagrees with the petitioners' interpretation of the SAA's provision regarding quantities and level-of-trade adjustments. Borusan argues that the petitioners have taken this quote out of context, as it is only intended to be illustrative of the Department's concern against double-counting when a party claims both a level-of-trade adjustment and an adjustment for differences in quantities.

DOC Position: We agree with the petitioners that we may adjust for differences in levels of trade only when such a difference is ''demonstrated to affect price comparability,'' as provided at section 773(a)(7)(A)(ii) of the Act. However, this sub-section also explicitly provides for how any such effect on price comparability is to be determined, *i.e.*, based on ''a pattern of consistent price differences between sales at different levels of trade in the country in which normal value is determined.'' *Id*. In this case, as stated in the preliminary results, we determined that a pattern of consistent price differences existed because we found the monthly average prices were higher at one level of trade for virtually all models and months as well as for virtually all sales. *See Preliminary Results* at 6158. Therefore, we cannot accept the petitioners' argument that Borusan must otherwise demonstrate a ''causal link'' between the difference in selling functions and prices in order to receive a level-of-trade adjustment for comparisons involving LOT C sales.

The Department ruled definitively on this issue in *Antifriction Bearings from France et al.*, 62 FR 2081, 2108 (January 15, 1997) (*AFBs 1994–95*). In addressing an argument made by the petitioner in that case that various respondents had failed to demonstrate that differences in prices were due to differences in the selling functions performed at each level of trade, the Department stated:

> The adoption of [the petitioner's] ''due to'' standard would impose an independent causation requirement upon both the level-of-trade adjustment and CEP-offset provisions. Such a requirement is neither required by the statute nor administratively feasible.

Id.

We also note the following regarding the petitioners' arguments concerning the effect on prices of (1) Borusan's discount policy and (2) the quantities sold at each level of trade. First, regarding the argument that the lower net prices at LOT A/B are caused in part by greater discounts granted at this level versus those granted at LOT C, while we agree that such differences in Borusan's discount policy between levels of trade may result in lower net prices at LOT A/B, this does not change that fact that such differences in net prices between levels of trade exist. Regarding the petitioners' argument concerning differences in quantities sold, the SAA provision cited by the petitioners regarding quantity differences vis a vis the level-of-trade analysis concerns the importance of not double-counting any quantity adjustment already granted (no quantity adjustment was made in this case). In this respect, the SAA provides:

> Commerce will isolate the price effect, if any, attributable to the sale at different levels of trade, and will ensure that expenses previously deducted from normal value are not deducted a second time through a level of trade adjustment.

SAA at 830. *See also* Senate Report on the Uruguay Round Agreements Act, which provides as follows:

> [S]ection 224 first creates section 773(a)(7)(A) providing for level of trade adjustments. Under this new provision, Commerce is directed to increase or decrease normal value to make due allowance for any difference (or lack of difference) between normal value and export price or constructed export price that is shown to be wholly or partly due to a difference in level of trade. *To avoid double counting, however, this new section expressly precludes level of trade adjustments to account for differences for which an allowance has already otherwise been made.*

Joint Report of the Committee on Finance et al., Uruguay Round Agreements Act, S. Rep. No. 103–412, at 70 (1994) (emphasis added).

Comment 1C—Reseller-Specific Level-of-Trade Adjustment

The petitioners contend that, in the event the Department continues to grant a level-of-trade adjustment for comparisons involving home market sales made at LOT C, it should make the adjustment on a reseller-specific basis. The petitioners argue that this is a more accurate methodology because it reflects the average amount of additional inventory maintenance performed by the specific reseller involved in each transaction.

Borusan responds that there is no legal basis for making the level-of-trade adjustment on a reseller-specific basis. Borusan states that the Department's revised regulations regarding level of trade state that the Department will normally calculate the amount of a level-of-trade adjustment by: (1) calculating the weighted-averages of the prices of sales at the two home market levels of trade; (2) calculating the average of the percentage differences between those weighted-average prices; and (3) applying this average percentage difference to normal value. See 19 CFR 351.412(e). Thus, Borusan concludes, the adjustment is to be made using a combined weighted-average of all sales at a particular level of trade.

DOC Position: We agree with Borusan that the revised regulations provide for a weighted-average adjustment. Further, the SAA states that ''any adjustments under section 773(a)(7)(A) will be calculated as the percentage by which the weighted-average prices at each of the two levels of trade differ in the market used to establish normal value.'' See SAA at 830. Accordingly, we have not changed the manner in which we have calculated the adjustment for these final results.

Comment 2: Home Market Indirect Selling Expenses

The petitioners argue that, because Borusan failed to follow the instructions in the Department's initial questionnaire regarding one of its two reported home market indirect selling expense fields, the Department should re-calculate these expenses based on adverse facts available. The petitioners' comments concern the INDIRSH1 expense, for which Borusan calculated separate factors based on the indirect selling expenses of each company that makes the final sale to the unaffiliated customer (*i.e.*, expenses incurred by the mills—Borusan Boru (BBBF), Kartal Boru, and Bosas—for LOT A sales, and expenses incurred by resellers for LOT B [3] and LOT C sales), allocated across home market sales made by each company. Borusan's specific deficiencies with respect to the Department's instructions include the following, according to the petitioners: (1) the failure to provide a list of overhead expenses itemizing the specific elements of each company's expenses, and (2) the submission of worksheets that are meaningless because they do not demonstrate either the amount of each type of expense or

[3] Although, as noted above, we consider Borusan's claimed LOT A and LOT B sales to be made at the same level of trade, we continue to refer to sales made through the back-to-back reseller channel as 'LOT B' sales for ease of reference and in keeping with the terminology used by the interested parties in this case.

the manner in which it was derived and allocated.

The petitioners also list a number of indirect selling expense and sales values that purportedly do not reconcile with Borusan's financial statements. Due to the proprietary nature of this list of selling expenses and sales values, we are unable to summarize or address the petitioners' specific comments in this regard. We address these claims further in the Final Results Analysis Memorandum.

Noting that the Department did not conduct a verification of information provided by Borusan in this review, the petitioners assert that the accuracy of the Department's margin calculation depends almost entirely on Borusan's cooperation and responsiveness, and maintain that Borusan's disregard of the Department's instructions is tantamount to failing verification. The petitioners claim that Borusan should, therefore, be deemed an uncooperative respondent, and its indirect selling expenses should be calculated using adverse facts available, based on the precedent established in *Olympic Adhesives, Inc.* v. *United States,* 899 F.2d 1565, 1571 (Fed. Cir. 1990). The petitioners recommend that the Department apply the highest indirect selling expense factor calculated for any member of the Borusan Group to each producer and reseller in the Borusan Group.

Borusan responds that its indirect selling expenses were adequately documented and, therefore, should not be modified. First, Borusan explains that, in response to the Department's instructions, it provided a complete explanation of how indirect selling expenses were calculated for BBBF, the largest pipe producer in the Borusan Group, and for Bozoklar, an affiliated reseller. Second, Borusan explains that, for this review, it used the same methodology that was verified and accepted by the Department in the 1993–94 and 1994–95 reviews.

DOC Position: Consistent with the past two reviews involving this company, we have accepted Borusan's methodology for reporting indirect selling expenses.

Section 776 of the Act provides, *inter alia,* that the Department shall apply facts available if an interested party withholds information that has been requested by the Department. In this case, there is no basis upon which to apply facts available as Borusan has provided the necessary information requested.

First, we do not agree with the petitioners regarding the adequacy of the supporting documentation submitted by Borusan concerning its INDIRSH1 expense. In its response to our supplemental questionnaire, Borusan provided detailed support for indirect selling expenses incurred by the largest pipe producer (BBBF) and by one of its largest resellers (Bozoklar). *See* Borusan sections A–D supplemental questionnaire response (December 19, 1997) (Borusan supplemental response), at Exhibits 13–14. As we explain further in the Final Results Analysis Memorandum, this documentation supports the reported expense and is in accordance with the company's normal books and records.

Regarding the petitioners' proposal that we treat Borusan as if it had failed verification due to the failure to provide information requested by the Department, as noted above, we have no basis for that decision; accordingly, we have not changed the calculation of Borusan's indirect selling expenses. In addition, we note that: (1) we conducted successful verifications of this company in the past two administrative reviews; (2) no verification was required for Borusan in this administrative review; and (3) the petitioners did not request that we verify Borusan's data in this review.

Comment 3: Allocation of Home Market Inland Freight From Plant to Warehouse, Warranty, and Interest Revenue

The petitioners contend that Borusan's calculations of home market inland freight from plant to warehouse, warranty expenses, and interest revenue on an annual basis are distortive and should have been calculated on a monthly basis. Citing *Tapered Roller Bearings and Parts Thereof, Finished and Unfinished, from Japan and Tapered Roller Bearings, Four Inches or Less in Outside Diameter, and Components Thereof, from Japan (TRBs from Japan),* 63 FR 2565 (January 15, 1998), the petitioners state that the Department's practice is to accept allocations only if they are not distortive and the respondent is fully cooperative but unable to report the information in a more specific manner.

With respect to inland freight from plant to warehouse, the petitioners argue that the allocation of freight charges across the entire POR is distortive, and maintain that Borusan has not shown that it is unable to report this expense on a monthly basis. Regarding warranty expenses, the petitioners assert that in addition to allocating this expense on an annual basis, Borusan has failed to comply with the Department's instructions to report such expenses on a model-specific basis, or on the most product-specific basis possible. Regarding interest revenue, the petitioners claim that Borusan's customer-specific allocations are insufficient because, as with inland freight and warranty, allocating this revenue on a yearly basis does not properly account for inflation in Turkey. The petitioners request that the Department base freight charges and warranty expenses on adverse facts available by not deducting these expenses from normal value; for interest revenue, the petitioners recommend the highest revenue reported for any customer during the POR.

Borusan responds generally that: (1) its responses to the Department's information requests concerning these expenses were complete; (2) while the Department requested further explanation regarding how Borusan calculated these charges, it never instructed Borusan to recalculate the expenses once Borusan supplied these explanations; and (3) the petitioners have provided no evidence for their assertion that Borusan's methodology with respect to these expenses is distortive.

Regarding inland freight expenses, Borusan cites to its supplemental questionnaire response, wherein the company provides an explanation regarding why it would be extremely burdensome to tie particular freight invoices to particular sales invoices. Borusan argues that its approach is reasonable given the large number of home market sales. In addition, Borusan notes that it based its reporting of freight charges on calendar year 1996, which the company maintains is conservative since, in so doing, it applied an average 1996 charge per ton to POR sales, including those made in 1997. According to Borusan, it is the Department's practice to accept values from the fiscal year that most closely approximates the POR when the POR spans two fiscal years.

Regarding the warranty expense, Borusan states that the Department's supplemental questionnaire focused on inquiring into why Borusan had calculated warranty expenses on a calendar-year basis instead of on a POR basis. Borusan states that it explained in its responses the calculation of warranty on a fiscal year basis is appropriate because it most closely reflects the POR. Borusan adds that, as with inland freight, it is conservative to calculate home market warranty expenses on a calendar-year (1996) basis given the high inflation rate in Turkey.

Finally, regarding interest revenue, Borusan states that, as explained in its supplemental response, it is unable to tie these charges to individual

transactions. Borusan adds that calculating this item on an annual basis is less distortive than a monthly calculation because interest collected in one month generally relates to invoices from a prior month.

DOC Position: We do not agree with the petitioners' claim that, because Borusan's home market inland freight expense, warranty expense, and interest revenue were not reported on a monthly basis, we should base these items on adverse facts available. However, we have determined that Borusan incorrectly reported home market inland freight expenses for certain LOT B sales, because the terms of sale indicate that these expenses were not incurred on such sales. We have not adjusted for inland freight with respect to LOT B sales.

We first address the petitioners' claims regarding monthly versus annual expense allocations. In our supplemental questionnaire, we asked Borusan for further clarification regarding a number of aspects of its reporting of these items, including requests for further descriptions of the allocation methodologies used in calculating the per-unit amounts reported in Borusan's home market sales database. Our questions concerned primarily: (1) the allocation of the inland freight expense to subject versus non-subject merchandise; (2) the feasibility of reporting the inland freight expense on a transaction-specific basis; (3) the direct versus indirect nature of the warranty expense; and (4) the rationale for reporting the warranty expense on a calendar-year, as opposed to POR, basis. *See, e.g.,* questions 34–36, and 39, of the Department's supplemental questionnaire (November 21, 1997). Borusan addressed each of our questions in turn in its supplemental response. *See* Borusan Supplemental Response at 29–33. Borusan's initial questionnaire response also addressed the basis for its reporting of interest revenue using a customer-specific methodology. See Borusan Questionnaire Response for sections B–D (September 8, 1997) (Borusan sections B–D response).

While we requested further information regarding various aspects of Borusan's allocation methodologies, we did not request the company to report these items on a monthly basis in either the initial or the supplemental questionnaire. Given that we did not request that Borusan report these items in this manner, it would be inappropriate to resort to adverse facts available as requested by the petitioners.[4]

However, we did not deduct freight expenses reported in the home market sales listing for LOT B sales, because Borusan has clearly indicated that such sales are made on an FOB-mill basis. Borusan allocated its freight expenses on a reseller-specific basis, allocating total freight expenses across all sales by each reseller, regardless of whether the sale was made at claimed LOT B or at LOT C. In response to our request that it report inland freight expenses on a transaction-specific basis, Borusan explained in its supplemental response (at 30–31) that it was unable to do so due to the large number of transactions involved, and, instead, continued to allocate these expenses across all sales by reseller. Thus, if a reseller made both LOT B and LOT C sales, Borusan reported per-unit freight expenses (Inland Freight, Plant to Distribution Warehouse; Inland Freight, Plant/Warehouse to Customer) for both LOT B and LOT C sales made by that reseller. In providing this explanation, Borusan referred to delivery expenses incurred on ''back-to-back'' sales. However, Borusan has clearly indicated, in a number of places in its questionnaire responses and in its case briefs, that the terms of sale for LOT B sales do not include delivery. *See* Borusan section A response at 13 (describing the delivery process on LOT B sales: ''The customer arranges for the transportation of the merchandise from the mill to the intended destination.''); *see also* Borusan sections B–D response at B–15, regarding terms of delivery for each channel of distribution; *see also* Borusan rebuttal brief at 5: (''LOT B sales involve shipment of the merchandise on an FOB-mill basis directly to the customers without the merchandise entering into the resellers' inventory.'') Although one element of the inland freight from plant to warehouse expense (truck loading expense) is reportedly incurred on all domestic shipments of merchandise produced by one mill (BBBF), Borusan provided no means of isolating this expense from the other inland freight expenses that it did not in fact incur on LOT B sales. Accordingly, for these final results, we have not made a deduction for inland freight expenses with respect to sales made at LOT B.

[4] In the event that future reviews of this order are requested, we will reconsider whether to request certain selling expense information on a monthly basis.

Comment 4: Pre-Sale Warehouse Expenses

The petitioners assert that the Department should deny any adjustment to normal value for Borusan's pre-sale warehouse expenses based on Borusan's failure to quantify these expenses properly. According to the petitioners, Borusan did not take the following actions, as required by the initial questionnaire: (1) Borusan did not list all warehouse locations used to distribute the foreign like product; (2) Borusan did not follow the instructions that it report as pre-sale warehouse expenses direct warehouse expenses only, and that it include indirect expenses for pre-sale warehousing among its reported indirect selling expenses; and (3) Borusan did not describe how the indirect and the direct costs of warehouse operations were separated. The petitioners state that, instead, Borusan simply calculated the reported pre-sale warehouse expense for each reseller by dividing the total warehouse expense incurred during 1996, including indirect expenses, by the total quantity of goods sold out of stock in 1996. In light of these alleged failures to comply with the Department's instructions, the petitioners assert that the Department should deny any deduction to normal value for pre-sale warehouse expenses.

Borusan responds that it properly documented its pre-sale warehouse expenses incurred in connection with home market sales. First, Borusan claims, the Department's policy, pursuant to section 773(a)(6) of the Act, is to make an adjustment to normal value for warehouse expenses, such as these, that are incurred at remote selling locations, citing *Certain Porcelain-on-Steel Cookware From Mexico: Final Results of Administrative Review,* 62 FR 42496 (August 7, 1997) (*Cookware from Mexico*). Borusan adds that its calculation of pre-sale warehouse expenses was prepared according to the methodology that was verified and accepted by the Department during the two most recent reviews. Finally, Borusan states, the Department did not ask in a supplemental questionnaire for additional information regarding Borusan's calculation of pre-sale warehouse expenses and, because the petitioners have provided no evidence to serve as a basis for the denial of an adjustment for Borusan's pre-sale warehouse expenses, the Department should continue to make this adjustment to normal value.

DOC Position: We have accepted as a movement expense the pre-sale warehouse expenses claimed by

Borusan. With respect to the petitioners' concern regarding the listing of warehouse locations, we note that Borusan did provide, in its initial questionnaire response (at Exhibit B–7), a list of locations for warehouses leased by its affiliated resellers. (Borusan incurred this expense for sales involving such leased warehouses but not with respect to warehouses owned by its affiliates.) With respect to the petitioners' concern regarding direct versus indirect warehouse expenses, first, we consider warehousing expenses that are incurred after the foreign like product leaves the original place of shipment as movement expenses. *See* 19 CFR 351.401(e)(2). Second, Borusan properly isolated this expense to only those sales on which it was incurred, *i.e.*, sales of merchandise stored in leased warehouses. Accordingly, we have accepted Borusan's reporting of this expense.

Comment 5: Packing Costs

The petitioners argue that Borusan failed to create a factual record supporting its calculation of packing costs for both the comparison market and the United States market and, therefore, the Department should calculate Borusan's packing costs using adverse facts available.

First, the petitioners claim that sections B and C of the Department's questionnaire instructed Borusan to do the following: (1) Describe the packing types used in the comparison market and those used to prepare merchandise for shipment to the United States; (2) submit worksheets listing the packing materials used, the average cost of each material, how much of each material was used, the average labor hours by packing type and the average per-hour labor cost, including benefits; and, (3) provide a list of overhead expenses incurred in packing and demonstrate how those expenses were allocated by packing type.

Instead, the petitioners argue, Borusan merely stated that: (1) It packs standard pipe for shipment in both the export and the domestic markets by tying bundles of pipes together with metal straps; and, (2) the reported packing cost includes the costs of labor, materials and overhead incurred during each month allocated over the total metric tons packed.

The petitioners argue further that, while section D of the Department's questionnaire requests a complete and detailed description of each stage of the production process, Borusan's description of the packing stage merely states that the pipe is marked and bundled for final shipment. While acknowledging that Borusan lists some packing materials in response to this item, the petitioners maintain that Borusan neglected to explain whether all bundles are packed in the same manner, or to report the quantities and costs of each packing material used. Likewise, the petitioners argue, Borusan failed to provide average labor hours and average labor costs per hour for packing, and provided no explanation for its allocation of packing overhead expenses. Finally, the petitioners challenge Borusan's methodology for allocating packing costs by weight, and insist that packing costs in the pipe industry are largely a function of the number of pieces being packed, not the weight.

For these reasons, the petitioners suggest that, consistent with *Circular Welded Non-Alloy Pipe and Tube From Mexico: Final Results of Antidumping Duty Administrative Review,* 62 FR 37014, 37020 (July 10, 1997) (*Pipe and Tube from Mexico*), the Department should double the average reported home market packing costs and use that as the U.S. packing cost as adverse facts available.

Borusan responds that the petitioners' arguments are without merit, and maintains that the petitioners have overlooked important information contained in Borusan's response. First, Borusan asserts that varnishing costs are materials costs (and were fully discussed in Borusan's sections B–D response at D–41–42) and not packing costs as argued by the petitioners. Second, Borusan claims that it provided allocation worksheets (at Exhibit D–13) that clearly explain the derivation of the reported per-unit costs for each month of the POR.

With respect to the petitioners' argument that Borusan failed to provide a list of variable overhead expenses incurred in packing, Borusan points out that it reported (at D–8) a list of the packing material used to bundle the pipes for shipment, plus the amount and description of each overhead expense incurred in packing.

Finally, Borusan claims that, while the petitioners objected to Borusan's allocation of packing costs based on weight, they offered no evidence to support a claim that Borusan's allocation methodology is distortive or inaccurate. Instead, Borusan argues, the methodology is reasonable and, furthermore, is consistent with the methodology verified and accepted by the Department during the two most recent reviews.

DOC Position: The petitioners' argument in favor of calculating Borusan's packing costs by use of adverse facts available is essentially two-pronged: (1) That Borusan has failed to act to the best of its ability to provide the complete information requested, and (2) that Borusan's chosen methodology, which allocates packing costs on the basis of weight, instead of pieces, is not reflective of actual practice in the pipe industry.

Regarding the first point, Borusan listed (at D–8) its material inputs by type, including packing materials. Further, Borusan's product brochure (at Exhibit A–27) explains that the merchandise is packaged as ''bare bundles.'' The petitioners have provided no evidence to indicate that Borusan has neglected to report all packing materials by type.

In addition, in response to our questionnaire, Borusan provided (at Exhibits D–13, D–14 and D–15) monthly transformation cost tables for its three production facilities. Borusan also provided (at Exhibits D–21 and D–23, respectively) worksheets illustrating the cost calculations for the highest volume U.S. product and the highest volume home market product. Borusan explained in its questionnaire response (at D–44) that all of the costs used in Exhibits D–13, D–14 and D–15 were taken from data contained in the company's internal monthly ledgers.

Regarding the second point, we note that in *Pipe and Tube From Mexico,* the petitioners' suggested model by which we use adverse facts available to calculate packing costs, the packing costs were calculated on a weight basis, the same methodology challenged as unreliable by the petitioners in this review. Furthermore, our acceptance of Borusan's methodology, which was verified and accepted by the Department in the two most recent reviews, is consistent with prior segments of this proceeding.

Comment 6: Allocation of Domestic Brokerage and Handling on U.S. Sales

The petitioners argue that Borusan should not have reported Turkish lashing charges, customs charges, loading charges, and port fees based on the weight of each U.S. shipment, since such charges are actually incurred on an *ad valorem* basis. The petitioners explain that basing such charges on weight results in a distortion when entries cover merchandise of varying values. Therefore, the petitioners assert, the Department should apply the highest domestic brokerage and handling amount reported for any U.S. transaction to all U.S. sales as facts available.

Borusan responds that the petitioners assertion that brokerage and handling

costs are incurred on an *ad valorem* basis is incorrect. Borusan asserts that a percentage charge contained in Borusan's response, which is cited by the petitioner in support of its claim that these expenses are incurred on an *ad valorem* basis, is in fact simply the value-added-tax rate collected on the customs charges and does not relate to the amount of the customs charges in any way.

DOC Position: The information on the record supports Borusan's position that the brokerage and handling charges, which Borusan reported on a shipment-specific basis, reflect the actual charges incurred by Borusan in connection with its U.S. shipments. *See* Borusan sections B–D response at Exhibit C–5. Therefore, we have not accepted the petitioners' arguments.

Comment 7: Interest Expense Factor

The petitioners make the following comments regarding Borusan's reported interest expense factor. First, they raise a general allocation claim, i.e., that Borusan incorrectly calculated this factor by taking the Borusan Group companies' annual expense amounts and dividing by 12. The petitioners propose that, as in the 1994–95 review, the Department should allocate the annual interest expense reported by Borusan to each month of the POR using the ratio of monthly-to-annual-interest expenses for the four largest of the Borusan Group firms.

Regarding the specific items that comprise Borusan's reported interest expense, the petitioners comment on the calculation of this item in the preliminary results as follows: (1) The Department correctly denied the claim made by Borusan in its supplemental response that foreign exchange losses should be excluded because they are due to inflation; (2) Borusan incorrectly included foreign exchange gains related to sales; (3) Borusan incorrectly amortized foreign exchange losses; and (4) Borusan incorrectly included various income items as offsets to its financial expenses, while improperly excluding a miscellaneous ''other financial expenses'' item. Regarding each of these items, the petitioners also claim that it is not possible to reconcile Borusan's breakout of reported income and expense items with the totals reported in Borusan's financial statements.

The petitioners' primary arguments concerning each of these issues are as follows. With respect to (1), the petitioners state that Borusan's own financial statement treats foreign exchange losses as an expense, not as an inflation adjustment. Regarding (2), while the petitioners acknowledge that gains on financial assets such as cash balances are appropriate offsets to financing costs, they maintain that Borusan has not explained sufficiently why its reported gains are appropriate offsets, particularly in light of the fact that the Department excluded Borusan's foreign exchange gains in the past two reviews (finding that Borusan's reported foreign exchange gains were related to sales, not production operations). Regarding (3), the petitioners state that exchange rate losses should not be amortized but, instead, all period losses should be included in the interest expense factor, and maintain that Borusan has not reported this expense in accordance with its normal books and records. Finally, with respect to (4), the petitioners state that the Department should not allow Borusan's claimed offsets for various categories of interest income (which concern offsets other than the exchange rate gain offset discussed in item 2, above), but should include the ''other financial expenses'' item because Borusan did not explain sufficiently why this should be excluded.

While Borusan does not address the petitioners' general comment that the Department should allocate interest expenses to each month of the POR using the ratio of monthly-to-annual-interest expenses for the four largest of the Borusan Group firms, it does respond to each of the other comments raised by the petitioners.

First, Borusan contends that, as claimed in the supplemental questionnaire, exchange rate losses are caused by inflation and should not be included in interest expense. Second, Borusan states that, consistent with the two most recent reviews, it did not make any offset for exchange gains related to sales. Third, Borusan disagrees with the petitioners' contention that there is no precedent for Borusan's amortization of exchange rate losses on foreign currency debt. In fact, Borusan claims, it is the Department's practice to amortize such translation losses over the life of the loan. Fourth, Borusan disputes the petitioners' suggestion that it did not substantiate its claimed interest income offsets, and maintains that its ''other financial expenses'' item should be excluded because it concerns bank commissions, which are reported in a separate field.

DOC Position: We first note that, consistent with prior segments of this proceeding and with the petitioners' arguments in this segment of the proceeding, we have allocated Borusan's interest expenses to each month of the POR using the ratio of monthly-to-annual-interest expenses for the four largest of the Borusan Group companies. *See 1994–95 Final Results* at 69074.

Regarding the petitioners' comments on the calculation of the interest factor, we agree with the petitioners that exchange losses on foreign currency debt represent a cost of borrowing and, therefore, should be included in the financial expense calculation. *See 1993–94 Final Results* at 51632 (''The Department has clearly established that translation losses on dollar-denominated loans, as reflected in the company's income statement, are appropriately included in the cost of production because they reflect an actual increase in the amount of local currency that will have to be paid to settle these loans.'') We have continued to include such losses in the interest expense calculation.

We disagree, however, with the petitioners' assertion that none of Borusan's reported exchange rate gains should be allowed. Our practice is to include foreign exchange gains as an offset to finance expenses if they are related to the cost of acquiring debt for purposes of financing production operations, and to exclude this item if it relates to sales. *See Notice of Final Determination of Sales at Less Than Fair Value: Certain Steel Concrete Reinforcing Bars from Turkey (Rebar from Turkey),* 62 FR 9737, 9741 (March 4, 1997); *see also Notice of Final Determination of Sales at Less Than Fair Value: Certain Pasta from Turkey,* 61 FR 30309, 30324 (June 14, 1996). In applying this standard in the prior two segments of this proceeding, we did not allow any of Borusan's reported exchange rate gains as an offset, finding that such gains ''were not debt-related, but rather involved export sales activities (*i.e.,* the gains arising from foreign-currency denominated export receivables).'' *1994–95 Final Results* at 69074; *see also 1993–94 Final Results* at 51632 (''In this case, we find that foreign exchange gains are related to sales, not production; therefore, they should not be used as an offset for calculating home market interest expenses.'')

However, unlike prior reviews, in the instant proceeding Borusan has included in its interest expense calculation only those exchange rate gains related to cash balances and inventory, while excluding those related to sales (accounts receivable). *See Borusan sections B–D response* at Exhibit D–20 (separating exchange rate gains ''earned on accounts receivable'' from those earned on ''cash balances and other,'' and demonstrating that these two items equal ''total foreign exchange gains''); *see also Borusan*

supplemental response, Attachment J[5]). Exchange rate gains on cash balances and inventory are short-term in nature and do not constitute a separate investing activity. Accordingly, we have accepted these exchange gains as an offset to finance expenses.

We also disagree with the petitioners' contention that Borusan should not be permitted to amortize its exchange rate losses. For purposes of our analysis, it is appropriate to amortize the foreign exchange losses over the life of the associated debt, since the gain or loss is realized only as the loans are paid. *See, e.g., Rebar from Turkey* at 9743. However, we also disagree with Borusan's proposed weighted-average amortization of the foreign exchange losses. Instead, we have amortized the foreign exchange loss incurred on each loan over the life of the associated loan.

Finally, regarding Borusan's claimed ''other income'' offsets and its rationale for not including its ''other financial expenses'' item, we note the following. First, as a general matter, we disagree with the petitioners' contention that it is not possible to substantiate the breakout of reported income and expense items from the totals reported in the financial statements. In fact, other than an amount called discount on term transactions, Borusan provided a detailed breakdown of the items listed in its financial expense calculation and a brief description of each item included therein. *See* Borusan sections B–D response at D–20.

It is the Department's practice to allow a respondent to offset financial expenses with short-term interest income earned from the general operations of the company. *See, e.g., Timken* v. *United States,* 852 F. Supp. 1040, 1048 (CIT 1994). The Department does not, however, offset interest expense with interest income earned on long-term investments because long-term investment does not relate to current operations. *See Notice of Final Determination of Sales at Less Than Fair Value: Small Diameter Circular Seamless Carbon and Alloy Steel, Standard, Line and Pressure Pipe From Italy,* 60 FR 31981, 31991 (June 19, 1995). Therefore, we have included income offsets that Borusan demonstrated were short-term in nature. We note in particular that the largest such offset, Borusan's 'other financial income,' relates to short-term bank interest; the absence of long-term notes receivable on Borusan's financial statements indicates that this amount is from short-term sources. We did not allow one claimed offset, 'discount on term transactions,' for which Borusan failed to explain either the source of the income or the short or long-term nature of the item.

We also agree with Borusan that 'other financial expenses' concern bank commissions, which were reported separately. Accordingly, we have not added such expenses to Borusan's interest expense calculation, as requested by the petitioners.

Comment 8: Purchases From Affiliated Suppliers

The petitioners argue that the Department should revalue the costs of coil and zinc purchased by Borusan's mills (BBBF, Kartal Boru, and Bosas) from affiliated parties. The petitioners state that the following data in Borusan's response indicate below-market pricing of such inputs: (1) BBBF's coil purchases from an affiliated party covered only the cost of production, plus transportation, exclusive of the affiliated party's selling, general and administrative expenses or profit; and (2) proprietary information in Borusan's response (as further described in the Final Results Analysis Memorandum) indicates that Kartal Boru's and Bosas' coil purchases, and BBBF's zinc purchases also were not made at market prices.

Borusan responds that the petitioners' allegation regarding prices paid to suppliers selectively ignores information provided in Borusan's supplemental response that demonstrates that the mills paid market prices for affiliated party coil and zinc inputs. Borusan claims that the petitioners distort the administrative record by characterizing BBBF's coil purchases from its affiliated supplier as 'substantial.'

DOC Position: We consider the inputs in question (coil and zinc) to be major inputs with respect to the production of subject merchandise. Accordingly, we have valued purchases of coil and zinc by Borusan's mills from affiliated parties at the higher of the cost of producing the input, the transfer price, or the market price. *See* section 773(f)(3) of the Act; *see also* 19 CFR 351.407(b). We describe our methodology for doing so in the Final Results Analysis Memorandum.

Comment 9: G&A and Interest Expense

The petitioners argue that the G&A and interest expense factors must be recalculated because the denominator (COGS) includes packing, which, when the factors are applied to COMs exclusive of packing, understates the G&A and interest expense calculations. The petitioners suggest that the Department should add packing to COM to correct the understatement of G&A and interest expenses, citing *Circular Welded Non-Alloy Steel Pipe from the Republic of Korea,* 62 FR 55574, 55581 (October 27, 1997).

Borusan responds that it has used the same methodology in the two most recent reviews and that this methodology was verified and accepted by the Department. Borusan contends that packing represents an insignificant portion of the understatement and is more than offset by applying historical G&A and interest expense factors to replacement costs.

DOC Position: We agree with the petitioners and have added packing to COM when calculating the G&A and interest expenses. Although Borusan asserts that the distortion is negligible, there is still an understatement of these expenses. As for Borusan's claim that we are applying a historical G&A and interest expense factor to replacement costs, both G&A and interest have been adjusted to account for inflation before calculating the G&A and interest expense factors.

Comment 10: Circumstance-of-Sale Adjustment for Imputed Credit

Borusan claims that the Department failed to make a circumstance-of-sale (COS) adjustment to normal value for imputed credit expenses when normal value was based on CV. Borusan argues that, pursuant to section 773(a)(8) of the Act, the Department's well-established practice dictates that it make such an adjustment, citing, *e.g., Notice of Final Determination of Sales at Less Than Fair Value: Steel Wire Rod From Canada,* 63 FR 9182, 9195 (February 24, 1998); *TRB's From Japan* at 2583; *Amended Final Results of Antidumping Duty Administrative Review: Fresh Kiwi Fruit From New Zealand,* 62 FR 47440 (September 9, 1997)).

The petitioners respond that: (1) due to Borusan's failure to quantify the COS adjustment it seeks, no such adjustment is warranted, and (2) if the Department does grant a COS adjustment, such adjustment should be based on a proper calculation of Borusan's net prices. Regarding the adequacy of Borusan's credit calculation, the petitioners claim that Borusan calculated a POR-average home market interest rate, and maintain that Borusan's failure to provide monthly interest rates makes it impossible to properly calculate home market credit expenses for purposes of

[5] The petitioners argue, based on proprietary information, that the information provided in this exhibit is insufficient to allow the Department to change its position from the past two reviews and grant an offset for exchange gains. We address this aspect of the petitioners' argument in the Final Results Analysis Memorandum.

the COS adjustment. The petitioners assert that the various interest rates charged to Borusan during the POR vary widely, and suggest that, due to the high inflation in Turkey, it would be unfair to calculate interest expense on an average basis. Further, the petitioners add, it is the Department's practice to calculate costs on a monthly basis, citing *Pipe and Tube from Mexico* at 37016.

The petitioners argue in the alternative that, if the Department does make the COS adjustment requested by Borusan, imputed home market credit expenses must be based on a proper calculation of Borusan's net prices. Specifically, the petitioners argue, Borusan's calculation of net price does not include a deduction for the quantity rebate granted to certain customers by Borusan, thereby overstating the net price to which the credit expense is applied.

DOC Position: Pursuant to section 773(a)(8) of the Act, a COS adjustment for home market imputed credit expenses should be made when CV is the basis for normal value. We use imputed credit expenses to measure the effect of a specific respondent's selling practices in the United States and in the comparison market. Because Borusan's U.S. sales were export price sales, the adjustment entails adding U.S. imputed credit to the CV, and subtracting home market imputed credit from the CV. Although we added the U.S. imputed credit for the preliminary results, we neglected to deduct the home market imputed credit. We have made this correction for the final results.

We disagree with the petitioners' assertion that, because Borusan did not calculate its home market credit expense using monthly interest rates, we should disallow this adjustment. Borusan calculated this expense on a weighted-average basis, *i.e.*, the total principle times the number of days utilized for each short-term loan. This methodology is consistent with that used in calculating interest for both the 1993–94 and the 1994–95 reviews of this proceeding, and we did not request that Borusan recalculate this expense using monthly interest rates. Under these facts, it would be inappropriate to deny this adjustment.

We also disagree that a deduction for the quantity rebate, as proposed by the petitioners, is appropriate, because the quantity rebate is not part of the opportunity cost of the use of money in each sale. Instead, the quantity rebate is given after payment has been made by Borusan's customer.

Final Results of Review

As a result of our review, we determine that the following margin exists for the period May 1, 1996, through April 30, 1997:

Manufacturer/exporter	Margin (percent)
The Borusan Group	0.02

The Department shall determine, and Customs shall assess, antidumping duties on all appropriate entries. As discussed above, because the number of transactions involved in this review and other simplification methods prevent entry-by-entry assessments, we have calculated importer-specific assessment rates. We divided the total dumping margins for the reviewed sales by the total entered value of those reviewed sales. We will direct Customs to assess the resulting percentage margin against the entered customs values for the subject merchandise on each of that importer's entries under the relevant order during the review period.[6] While the Department is aware that the entered value of the reviewed sales is not necessarily equal to the entered value of entries during the POR, use of entered value of sales as the basis of the assessment rate permits the Department to collect a reasonable approximation of the antidumping duties which would have been determined if the Department had reviewed those sales of merchandise actually entered during the POR.

Furthermore, the following deposit requirements will be effective for all shipments of the subject merchandise entered, or withdrawn from warehouse, for consumption on or after the publication date of these final results of administrative review, as provided by section 751(a) of the Act: (1) the cash deposit rate for Borusan will be zero; (2) for merchandise exported by manufacturers or exporters not covered in this review but covered in a previous segment of this proceeding, the cash deposit rate will continue to be the company-specific rate published in the most recent final results in which that manufacturer or exporter participated; (3) if the exporter is not a firm covered in this review or in any previous segment of this proceeding, but the manufacturer is, the cash deposit rate will be that established for the manufacturer of the merchandise in these final results of review or in the most recent final results in which that manufacturer participated; and (4) if neither the exporter nor the manufacturer is a firm covered in this review or in any previous segment of this proceeding, the cash deposit rate will be 14.74 percent, the all others rate established in the less-than-fair-value investigation. These deposit requirements shall remain in effect until publication of the final results of the next administrative review.

This notice also serves as final reminder to importers of their responsibility to file a certificate regarding the reimbursement of antidumping duties prior to liquidation of the relevant entries during this review period. Failure to comply with this requirement could result in the Secretary's presumption that reimbursement of antidumping duties occurred, and in the subsequent assessment of double antidumping duties.

This notice also is the only reminder to parties subject to administrative protective order (APO) of their responsibility concerning the return or destruction of proprietary information disclosed under APO in accordance with 19 CFR 353.34(d). Failure to comply is a violation of the APO.

This determination is issued and published in accordance with sections 751(a)(1) and 777(i)(1) of the Act.

Dated: June 18, 1998.

Richard W. Moreland,

Acting Assistant Secretary for Import Administration.

[FR Doc. 98–17250 Filed 6–26–98; 8:45 am]

BILLING CODE 3510–DS–P

[6] We note that, in the preliminary results, we erroneously indicated that if the assessment rates that we calculated for the final results were *de minimis*, we would not instruct Customs to assess duties. However, section 353.6 (b) of our regulations requires the assessment of duties for any importer-specific assessment rates greater than zero. Accordingly, we have not disregarded *de minimis* rates for assessment purposes.

DEPARTMENT OF COMMERCE

National Oceanic and Atmospheric Administration

National Estuarine Research Reserve System

AGENCY: Office of Ocean and Coastal Resource Management (OCRM), National Ocean Service (NOS), National Oceanic and Atmospheric Administration, Department of Commerce.

ACTION: Notice of proposed boundary expansion for the Padilla Bay National Estuarine Research Reserve.

SUMMARY: The Sanctuaries and Reserves Division of OCRM is considering a requesting by the Washington State Department of Ecology to include the 92

acre Hat Island adjacent to the boundary of the Padilla Bay National Estuarine Research Reserve (PBNERR) within the PBNERR boundary. Hat Island, currently in state ownership, contains primarily forested upland, rocky cliffs, rocky shores, and intertidal seagrass habitats. The island supports old growth forests dating back to the 1600's, active nesting and perching habitat for state and federally threatened and endangered bird species, and unique vegetative communities including the ''Idaho bunchgrass'' recommended for protection by the Washington State Natural Heritage Program. It provides ideal research and education opportunities for the PBNERR.

FOR FURTHER INFORMATION CONTACT: Terry Stevens, Reserve Manager, Padilla Bay National Estuarine Research Reserve, Breazeale-Padilla Bay Interpretive Center, 1043 Bay View-Edison Road, Mount Vernon, Washington 98273; Phone (360) 428–1558 or Nina Garfield, Sanctuaries and Reserves Division, National Oceanic and Atmospheric Administration, SSMC4, 11th Floor, Silver Spring, MD 20910; Phone (301) 713–3141, ext. 171.

SUPPLEMENTARY INFORMATION: The Padilla Bay National Estuarine Research Reserve (PBNERR) was designated in 1980 pursuant to section 315 of the Coastal Zone Management Act of 1972, as amended, 16 U.S.C. 1461. The PBNERR includes more than 10,000 acres within its administrative boundary comprising eelgrass, subtidal sand and mud habitats, and an upland farm area.

Washington State requested NOAA approval to amend the PBNERR boundary to include the state-owned Hat Island adjacent to the current boundary. For several years Hat Island has been discussed for possible inclusion into the PBNERR boundary. During original boundary planning efforts by the Governor's Steering Committee for the Reserve in 1979–80, Hat Island was recognized as a valuable asset for inclusion, but due to its private ownership and extreme high cost, it was decided to leave it outside the boundary and only include the two islands (Saddlebag and Dot) to the north which were already owned by the State. Interest in including Hat Island at a future date was noted in the management plan for future consideration. In the early 1990's, Hat Island was purchased by the Nature Conservancy, and then by the State with funds appropriated for the Washington Wildlife and Recreation Program, with interim management responsibility granted to the Washington Department of Natural Resources (WDNR). Discussions between the Washington Department of Ecology (the PBNERR's managing authority) and the WDNR have concluded that the island is best suited for inclusion in the PBNERR.

The inclusion of Hat Island into the PBNERR will enhance opportunities for research, monitoring, education, and management of Puget Sound's unique estuarine resources.

The expansion proposes inclusion of the 92 acres Hat Island on the western boundary of the PBNERR. This island is dominated by forested uplands, including old growth stands of Douglas fir, steep rocky cliffs, unique vegetative communities, and rocky shoreline, and intertidal and subtidal seagrass communities.

Any person wishing to comment on the proposed boundary expansion may forward written comments to Ms. Nina Garfield, Sanctuaries and Reserves Division, Office of Ocean and Coastal Resource Management, National Oceanic and Atmospheric Administration, 1305 East-West Highway, SSMC4, 11th Floor, Silver Spring, MD 20910. Comments must be submitted no later than thirty (30) calendar days from issuance of this notice.

(Federal Domestic Assistance Catalog Number 11.420 (Coastal Zone Management) Research Reserves.)

Dated: June 22, 1998.

Nancy Foster,

Asssistant Administrator, Ocean Services and Coastal Zone Management.

[FR Doc. 98–17260 Filed 6–26–98; 8:45 am]

BILLING CODE 3510–08–M

DEPARTMENT OF DEFENSE

Office of the Secretary

Submission for OMB Review; Comment Request

ACTION: Notice.

The Department of Defense has submitted to OMB for clearance, the following proposal for collection of information under the provisions of the Paperwork Reduction Act (44 U.S.C., Chapter 35).

Title, Associated Form, and OMB Number: Customer Service Survey—Regulatory Program, U.S. Army Corps of Engineers; ENG 5065; OMB Number 0710—[To Be Determined].

Type of Request: New Collection.

Number of Respondents: 60,000.

Responses Per Respondent: 1.

Annual Responses: 60,000.

Average Burden Per Response: 15 minutes.

Annual Burden Hours: 15,000.

Needs And Uses: The survey form will be provided to the public when they receive a regulatory product, primarily a permit decision or wetland determination. The information collected will be used to determine what areas of the program can be improved and to consider policy areas which may need revision to improve customer satisfaction. Without this customer survey, we could not comply with Executive Order 12862, ''Setting Customer Service Standards,'' and would have to rely on more informal and less structured, and therefore less effective, methods of obtaining public input.

Affected Public: Individuals or Households; Business or Other For-Profit; Not-For-Profit Institutions; Farms; State, Local or Tribal Government.

Frequency: On occasion.

Respondent's Obligation: Voluntary.

OMB Desk Officer: Mr. James A. Laity.

Written comments and recommendations on the proposed information collection should be sent to Mr. Laity at the Office of Management and Budget, Desk Officer for U.S. Army COE, Room 10202, New Executive Office Building, Washington, DC 20503.

DOD Clearance Officer: Mr. Robert Cushing.

Written requests for copies of the information collection proposal should be sent to Mr. Cushing WHS/DIOR, 1215 Jefferson Davis Highway, Suite 1204, Arlington, VA 22202–4302.

Dated: June 22, 1998.

Patricia L. Toppings,

Alternate OSD Federal Register Liaison Officer, Department of Defense.

[FR Doc. 98–17160 Filed 6–26–98; 8:45 am]

BILLING CODE 5000–04–M

DEPARTMENT OF DEFENSE

Office of the Secretary

Submission for OMB Review; Comment Request

ACTION: Notice.

The Department of Defense has submitted to OMB for clearance, the following proposal for collection of information under the provisions of the Paperwork Reduction Act (44 U.S.C. Chapter 35).

Title and OMB Number: Defense Federal Acquisition Regulation Supplement (DFARS) Part 205, Publicizing Contract Actions, and DFARS 252.205–7000, Provision of Information to Cooperative Agreement Holders; OMB Number 0704–0286.

Type of Request: Extension.
Number of Respondents: 6,862.
Responses per Respondent: 1.
Annual Responses: 6,862.
Average Burden per Response: 1.1 hours.
Annual Burden Hours: 7,548.
Needs and Uses: This information collection requirement pertains to contractor information provided to Cooperative Agreement Holders. DFARS Subpart 205.4 and the clause at DFARS 252.205–7000 require that defense prime contractors awarded contracts over $500,000 provide to cooperative agreement holders, upon request, a list of employees or offices that are responsible for entering into subcontracts under defense contracts. The list must include the business address, telephone number, and area of responsibility of each employee or office. The purpose of the cooperative agreements is for the agreement holders to provide procurement technical assistance to business entities within a specified geographic area. This guidance implements 10 U.S.C. 2416.
Affected Public: Business or Other For-Profit; Not-For-Profit Institutions.
Frequency: On occasion.
Respondent Obligation: Required to obtain or retain benefits.
OMB Desk Officer: Mr. Peter N. Weiss.
Written comments and recommendations on the proposed information collection should be sent to Mr. Weiss at the Office of Management and Budget, Desk Officer for DoD, Room 10236, New Executive Office Building, Washington, DC 20503.
DOD Clearance Officer: Mr. Robert Cushing. Written requests for copies of the information collection proposal should be sent to Mr. Cushing, WHS/DIOR, 1215 Jefferson Davis Highway, Suite 1204, Arlington, VA 22202–4302.

Dated: June 22, 1998.

Patricia L. Toppings,

Alternate OSD Federal Register Liaison Officer, Department of Defense.

[FR Doc. 98–17161 Filed 6–26–98; 8:45 am]

BILLING CODE 5000–04–M

DEPARTMENT OF DEFENSE

Office of the Secretary

Submission for OMB Review; Comment Request

ACTION: Notice.

The Department of Defense has submitted to OMB for clearance, the following proposal for collection of information under the provisions of the Paperwork Reduction Act (44 U.S.C. Chapter 35).

Title and OMB Number: Defense Federal Acquisition Regulation Supplement (DFARS) Part 236, Construction and Architect-Engineer Contracts, and Related Clauses at 252.236; OMB Number 0704–0255.
Type of Request: Extension.
Number of Respondents: 2,740.
Responses per Respondent: 1.
Annual Responses: 2,740.
Average Burden per Response: 100.96 hours.
Annual Burden Hours: 276,625.
Needs and Uses: This information collection requirement pertains to information collections applicable to fixed-price construction contracts. Government personnel use the information generated by these collections to (a) evaluate contractor proposals for contract modifications, (b) determine that a contractor has removed obstructions to navigation, (c) review contractor requests for payment for mobilization and determine reasonableness of costs allocated to mobilization and demobilization, and (d) determine eligibility for the 20 percent evaluation preference for U.S. firms in the award of some overseas construction contracts. This request covers the following requirements prescribed in DFARS 236.570, applicable to fixed-price construction contracts: (i) DFARS 252.236–7000 requries contractors to submit a price breakdown with any proposal for a contract modification; (2) DFARS 252.236–7002 requires contractors to notify the contracting officer of obstructions in navigable waterways; (3) DFARS 252.236–7003 requires contractors to provide supporting documentation when submitting requests for payment for mobilization and preparatory work; (4) DFARS 252.236–7004 permits contracting officers to require contractors to furnish cost data justifying the percentage of the cost split between mobilization and demobilization, if the contracting officer believes that the proposed percentages do not bear a reasonable relation to the cost of the work; and, (5) DFARS 252.233–7010 and DFARS 252.236–7012 require offerors to identify their status as a U.S. firm or, when contract performance will be on Kwajalein Atoll, status as a U.S. or Marshallese firm.
Affected Public: Business or Other For-Profit.
Frequency: On occasion.
Respondent's Obligation: Required to obtain or retain benefits.
OMB Desk Officer: Mr. Peter N. Weiss.
Written comments and recommendations on the proposed information collection should be sent to Mr. Weiss at the Office of Management and Budget, Desk Officer for DoD, Room 10236, New Executive Office Building, Washington, DC 20503.

DOD Clearance Officer: Mr. Robert Cushing.

Written requests for copies of the information collection proposal should be sent to Mr. Cushing, WHS/DIOR, 1215 Jefferson Davis Highway, Suite 1204, Arlington, VA 22202–4302.

Dated: June 23, 1998.

Patricia L. Toppings,

Alternate OSD Federal Register Liaison Officer, Department of Defense.

[FR Doc. 98–17162 Filed 6–26–98; 8:45 am]

BILLING CODE 5000–04–M

DEPARTMENT OF DEFENSE

Office of the Secretary

Defense Science Board Task Force on National Imagery and Mapping Agency (NIMA)

ACTION: Notice of Advisory Committee meetings.

SUMMARY: The Defense Science Board Task Force on National Imagery and Mapping Agency (NIMA) will meet in closed session on June 23–24, 1998 at the National Reconnaissance Organization, 14675 Lee Road, Chantilly, Virginia. In order for the Task Force to obtain time sensitive classified briefings, critical to the understanding of the issues, this meeting is scheduled on short notice.

The mission of the Defense Science Board is to advise the Secretary of Defense through the Under Secretary of Defense for Acquisition and Technology on scientific and technical matters as they affect the perceived needs of the Department of Defense. At this meeting the Task Force will review the objectives and plans of the National Imagery and Mapping Agency (NIMA) to meet the needs of the national and military intelligence customers as they enter the 21st Century.

In accordance with Section 10(d) of the Federal Advisory Committee Act, Pub. L. 92–463, as amended (5 U.S.C. App. II, (1994)), it has been determined that this DSB Task Force meeting concerns matters listed in 5 U.S.C. 552b(c)(1) (1994), and that accordingly this meeting will be closed to the public.

Patricia L. Toppings,

Alternate OSD Federal Register Liaison Officer, Department of Defense.

[FR Doc. 98–17158 Filed 6–26–98; 8:45 am]

BILLING CODE 5000–04–M

DEPARTMENT OF DEFENSE

Office of the Secretary

Defense Science Board Task Force on Test and Evaluation

ACTION: Notice of advisory committee meetings.

SUMMARY: The Defense Science Board Task Force on Test and Evaluation will meet in closed session on July 14–15, 1998 at Strategic Analysis, Inc., 4001 N. Fairfax Drive, Arlington, Virginia.

The mission of the Defense Science Board is to advise the Secretary of Defense through the Under Secretary of Defense for Acquisition and Technology on scientific and technical matters as they affect the perceived needs of the Department of Defense. At this meeting the Task Force will review the entire range of activities relating to Test and Evaluation and recommend new and innovative ways that the T&E community can better support the warfighter.

In accordance with Section 10(d) of the Federal Advisory Committee Act, Pub. L. No. 92–463, as amended (5 U.S.C. App. II, (1994)), it has been determined that this DSB Task Force meeting concerns matters listed in 5 U.S.C. 552b(c)(1) (1994), and that accordingly this meeting will be closed to the public.

Dated: June 23, 1998.

Patricia L. Toppings,

Alternate OSD Federal Register Liaison Officer, Department of Defense.

[FR Doc. 98–17159 Filed 6–26–98; 8:45 am]

BILLING CODE 5000–04–M

DEPARTMENT OF EDUCATION

Notice of Proposed Information Collection Requests

AGENCY: Department of Education.

SUMMARY: The Acting Deputy Chief Information Officer, Office of the Chief Information Officer, invites comments on the proposed information collection requests as required by the Paperwork Reduction Act of 1995.

DATES: Interested persons are invited to submit comments on or before August 28, 1998.

ADDRESSES: Written comments and requests for copies of the proposed information collection requests should be addressed to Patrick J. Sherrill, Department of Education, 600 Independence Avenue, SW, Room 5624, Regional Office Building 3, Washington, DC 20202–4651.

FOR FURTHER INFORMATION CONTACT: Patrick J. Sherrill (202) 708–8196. Individuals who use a telecommunications device for the deaf (TDD) may call the Federal Information Relay Service (FIRS) at 1–800–877–8339 between 8 a.m. and 8 p.m., Eastern time, Monday through Friday.

SUPPLEMENTARY INFORMATION: Section 3506 of the Paperwork Reduction Act of 1995 (44 U.S.C. Chapter 35) requires that the Office of Management and Budget (OMB) provide interested Federal agencies and the public an early opportunity to comment on information collection requests. OMB may amend or waive the requirement for public consultation to the extent that public participation in the approval process would defeat the purpose of the information collection, violate State or Federal law, or substantially interfere with any agency's ability to perform its statutory obligations. The Acting Deputy Chief Information Officer, Office of the Chief Information Officer, publishes this notice containing proposed information collection requests prior to submission of these requests to OMB. Each proposed information collection, grouped by office, contains the following: (1) Type of review requested, e.g., new, revision, extension, existing or reinstatement; (2) Title; (3) Summary of the collection; (4) Description of the need for, and proposed use of, the information; (5) Respondents and frequency of collection; and (6) Reporting and/or Recordkeeping burden. OMB invites public comment at the address specified above. Copies of the requests are available from Patrick J. Sherrill at the address specified above.

The Department of Education is especially interested in public comment addressing the following issues: (1) is this collection necessary to the proper functions of the Department; (2) will this information be processed and used in a timely manner, (3) is the estimate of burden accurate; (4) how might the Department enhance the quality, utility, and clarity of the information to be collected, and (5) how might the Department minimize the burden of this collection on the respondents, including through the use of information technology.

Dated: June 23, 1998.

Hazel Fiers,

Acting Deputy Chief Information Officer, Office of the Chief Information Officer.

Office of Elementary and Secondary Education

Type of Review: Reinstatement.

Title: Indian Student Eligibility Certification Form for Formula Grants to Local Educational Agencies.

Frequency: Annually.

Affected Public: Individuals or households; State, local or Tribal Gov't, SEAs or LEAs.

Annual Reporting and Recordkeeping Hour Burden:

Responses: 11,200.

Burden Hours: 3,100.

Abstract: The Indian Student Eligibility Certification Form is used by LEAs to certify the number of eligible Indian students enrolled within their school system for the purpose of generating funds under the Indian Education Formula Grant Program to LEAs.

Office of Special Education and Rehabilitative Services

Type of Review: New.

Title: Early Intervention Program for Infants and Toddlers with Disabilities (Part C of the Individuals with Disabilities Education Act) Self-Study Instrument.

Frequency: Every 3 or 4 years per State, based on the monitoring schedule.

Affected Public: Individuals or households; Businesses or other for-profits; Not-for-profit institutions; State, local or Tribal Gov't, SEAs or LEAs.

Annual Reporting and Recordkeeping Hour Burden:

Responses: 12.

Burden Hours: 3,360.

Abstract: Under the Early Intervention Program for Infants and Toddlers with Disabilities (Part C of the Individuals with Disabilities Education Act), States are required to maintain and implement a Statewide, comprehensive, coordinated, multi disciplinary, interagency system that provides early intervention services to infants and toddlers with disabilities and their families. The State's lead agency for Part C is responsible for the monitoring of programs and activities within the State, and the Federal government must provide technical assistance to States to carry out their Part C responsibilities. The self study instrument provides technical guidance to the State, and is also used for Federal and State monitoring of the Part C program.

Office of Special Education and Rehabilitative Services

Type of Review: Reinstatement.

Title: Section 704 Annual Performance Report.

Frequency: Annually.

Affected Public: Individuals or households; Not-for-profit institutions; State, local or Tribal Gov't. SEAs or LEAs.

Annual Reporting and Recordkeeping Hour Burden:

Responses: 320.

Burden Hours: 44.

Abstract: Section 752(I)(2)(A) of the Rehabilitation Act Amendments of 1992 (Attachment A) requires each grantee under this program to submit an annual report to the Commissioner of the Rehabilitation Services Administration (RSA) on essential demographic, service and outcome information. The information collected by RSA will be used to evaluate the program, including the new Government Performance Results Act requirements, and make recommendations to Congress. It provides RSA with a uniform and efficient method of monitoring the program for compliance with statutory and regulatory requirements and to determine substantial progress required for funding of all non-competing continuation discretionary grants. The respondents are Centers for Independent Living and Designated State Units.

[FR Doc. 98–17187 Filed 6–26–98; 8:45 am]

BILLING CODE 4000–01–P

DEPARTMENT OF EDUCATION

National Board of the Fund for the Improvement of Postsecondary Education; Meeting

AGENCY: National Board of the Fund for the Improvement of Postsecondary Education, Education.

ACTION: Correction.

SUMMARY: On June 16, 1998 a notice of the proposed agenda of a forthcoming meeting of the National Board of the Fund for the Improvement of Postsecondary Education was published in the **Federal Register** (63 FR 32866–32867).

This notice corrects the times allocated for the closed and open sessions. The correct times for the closed sessions are from 8:30 a.m. to 12:00 p.m., and from 2:30 p.m. to 5:00 p.m. The correct time for the open session is from 12:00 p.m. to 2:30 p.m.

FOR FURTHER INFORMATION CONTACT: Charles Karelis, U.S. Department of Education, 600 Independence Avenue, SW, Room 3100, ROB #3, Washington, DC 20202–5175. Telephone: (202) 708–5750. Individuals who use a telecommunications device for the deaf (TDD) may call the Federal Information Relay Service (FIRS) at 1–800–877–8339 between 8:00 a.m. and 8:00 p.m., Eastern time, Monday through Friday.

Individuals with disabilities may obtain this document in an alternate format (e.g., Braille, large print, audiotape, or computer diskette) on request to the contact person listed in the preceding paragraph

Dated: June 19, 1998.

David A. Longanecker,

Assistant Secretary for Postsecondary Education.

[FR Doc. 98–17139 Filed 6–26–98; 8:45 am]

BILLING CODE 4000–01–M

DEPARTMENT OF ENERGY

Federal Energy Regulatory Commission

[Docket No. IC98–561–000; FERC–561]

Proposed Information Collection and Request for Comments

June 23, 1998.

AGENCY: Federal Energy Regulatory Commission.

ACTION: Notice of proposed information collection and request for comments.

SUMMARY: In compliance with the requirements of Section 3506(c)(2)(a) of the Paperwork Reduction Act of 1995 (Pub. L. No. 104–13), the Federal Energy Regulatory Commission (Commission) is soliciting public comment on the specific aspects of the information collection described below.

DATES: Consideration will be given to comments submitted on or before August 28, 1998.

ADDRESSES: Copies of the proposed collection of information can be obtained from and written comments may be submitted to the Federal Energy Regulatory Commission, Attn: Michael Miller, Office of the Chief Information Officer, CI–1, 888 First Street NE., Washington, DC 20426.

FOR FURTHER INFORMATION CONTACT: Michael Miller may be reached by telephone at (202) 208–1415, by fax at (202) 273–0873, and by e-mail at michael.miller@ferc.fed.us.

SUPPLEMENTARY INFORMATION: The information collected under the requirements of FERC Form 561 ''Annual Report of Interlocking Positions'' (OMB No. 1902–0099) is used by the Commission to implement the statutory provisions of Title II, Section 211 of the Public Utility Regulatory Policies Act of 1978 (PURPA) (16 U.S.C. 825d) which amended Part III Section 305© of the Federal Power Act (FPA). Submission of the list is necessary to fulfill the requirements of Section 211—Interlocking Directorates, which defines monitoring and regulatory operations concerning interlocking directorate positions held by utility personnel and possible conflicts of interest. The information is collected by the Commission to identify persons holding interlocking position between public utilities and possible conflicts of interest. Through this process, the Commission is able to review and exercise oversight of interlocking directorates of public utilities and their related activities. Specifically, the Commission must determine that individuals in utility operations holding two positions at the same time would adversely affect the public interest. The Commission can employ enforcement proceedings when violations and omissions of the Act's provisions occur. The compliance with these requirements is mandatory. The reporting requirements are found at 18 CFR 46.6. and 131.31.

Action: The Commission is requesting a three-year extension of the current expiration date, with no changes to the existing collection of data.

Burden Statement: Public reporting burden for this collection is estimated as:

Number of respondents annually (1)	Number of responses per respondent (2)	Average burden hours per response (3)	Total annual burden hours (1)x(2)x(3)
1,600	1	0.25	400

The estimated total cost to respondents is $21,052. (400 hours divided by 2,088 hours per year per employee times $109,889 per year per average employee = $21,052). The cost per respondent is $13.

The reporting burden includes the total time, effort, or financial resources expended to generate, maintain, retain, disclose, or provide the information including: (1) Reviewing instructions; (2) developing acquiring, installing, and

utilizing technology and systems for the purposes of collecting, validating, verifying, processing, maintaining, disclosing and providing information; (3) adjusting the existing ways to comply with any previously applicable instructions and requirements; (4) training personnel to respond to a collection of information; (5) searching data sources; (6) completing and reviewing the collection of information; and (7) transmitting, or otherwise disclosing the information.

The estimate of cost for respondents is based upon salaries for professional and clerical support, as well as direct and indirect overhead costs. Direct costs include all costs directly attributable to providing this information, such as administrative costs and the cost for information technology. Indirect or overhead costs are costs incurred by an organization in support of its mission. These costs apply to activities which benefit the whole organization rather than any one particular function or activity.

Comments are invited on: (1) Whether the proposed collection of information is necessary for the proper performance of the functions of the Commission, including whether the information will have practical utility; (2) the accuracy of the agency's estimate of the burden of the proposed collection of information, including the validity of the methodology and assumptions used; (3) ways to enhance the quality, utility and clarity of the information to be collected; and (4) ways to minimize the burden of the collection of information on those who are to respond, including the use of appropriate automated, electronic, mechanical, or other technological collection techniques or other forms of information technology *e.g.* permitting electronic submission of responses.

Linwood A Watson, Jr.,

Acting Secretary.

[FR Doc. 98–17184 Filed 6–26–98; 8:45 am]

BILLING CODE 6717–01–M

DEPARTMENT OF ENERGY

Federal Energy Regulatory Commission

[Project No. 2035–006, CO]

City and County of Denver, CO; Notice of Application and Applicant-Prepared EA Accepted for Filing; Notice Requesting Interventions and Protests; and Notice Requesting Comments, Final Terms and Conditions, Recommendations and Prescriptions

June 23, 1998.

The Applicant, the City and County of Denver, Colorado acting by and through its Board of Water Commissioners (Denver Water), proposes to continue to operate and maintain its existing Gross Reservoir Project and to construct a hydroelectric generating facility with a capacity of not more than 5 megawatts (MW) at the project. The Gross Reservoir Project is on South Boulder Creek in Boulder County, Colorado. The project is located partially on lands of the United States administered by the U.S. Forest Service, Roosevelt National Forest, and the Bureau of Land Management.

The existing project consists of: (1) a 340-foot-high concrete gravity dam with a crest length of 1,050 feet; (2) a reservoir with a surface area of 418 acres with 2-foot-high flashboards on the dam spillway; and (3) a valve house, located downstream from the spillway apron, containing discharge valves that release flows onto a reinforced-concrete splash pad. The applicant proposes to install the following facilities: (1) a powerhouse, reconstructed out of the existing valve house, containing one turbine-generator unit with an installed capacity not to exceed 5 MW; (2) a switchyard, located between the dam and the powerhouse; and (3) a 25-kilovolt (kV), 1-mile-long transmission line, interconnecting to the Public Service Company of Colorado system and replacing an existing 4.16-kV distribution line.

The purpose of this notice is to: (1) update interested parties on the Gross Reservoir Project application process status: (2) inform all interested parties that the Gross Reservoir applicant-prepared environmental assessment (EA) and final license application filed with the Commission on April 29, 1998, are hereby accepted; (3) invite interventions and protests; and (4) solicit comments, final recommendations, terms and conditions, or prescriptions on Denver Water's EA and final license application.

Applicant-Prepared EA Process and Gross Reservoir Project Schedule

The Energy Policy Act of 1992 (Act) gives the Commission the authority to allow the filing of an applicant-prepared EA with a license application. The Act also directs the Commission to institute procedures, including pre-application consultations, to advise applicants of studies or other information foreseeably required by the Commission.

On September 10, 1996, the Director, Office of Hydropower Licensing, waived or amended certain of the Commission's regulations to allow for the processes of license application and applicant-prepared EA preparation to be coordinated.

Natioal Environmental Policy Act (NEPA) scoping was conducted on the project through scoping documents issued October 17, 1996, and March 19, 1997, and in public scoping meetings on November 7, 1996. On December 15, 1997, Denver Water issued for comment a draft license application and preliminary draft EA. On April 29, 1998, Denver Water filed with the Commission the final license application and applicant-prepared EA, copies of which can be obtained from Denver Water.

Commision staff have determined that some additional information is needed from Denver Water, which is due on July 10, 1998 (except for engineering drawings of Gross dam, which are due on August 9, 1998). Once that information is received, staff will complete and issue a draft EA for comment. Staff anticipate issuing their draft EA by the end of 1998, and intend on incorporating final comments into the staff draft EA. The deadline for filing comments on the application pursuant to this notice takes into account the staff additional information request. Therefore, commenters should have sufficient time to review Denver Water's additional information before filing final comments.

Interventions and Protests

All such filings must: (1) bear in all capital letters the title ''MOTION TO INTERVENE'', (2) set forth in the heading the name of the Applicant and the project number of the application to which the filing responds; (3) furnish the name, address, and telephone number of the person protesting or intervening; and (4) otherwise comply with the requirements of 19 CFR 385.2001 through 385.2005. Agencies may obtain copies of the application directly from Denver Water. All motions to intervene must be received 60 days from the date of this notice. A copy of

any motion to intervene or protest must be served on each representative of Denver Water specified in the final application.

Comments, Final Terms and Conditions, Recommendations and Prescriptions

Interested parties have 60 days from the date of this notice to file with the Commission any final comments, final recommendations, terms and conditions and prescriptions for the Gross Reservoir Project. Denver Water will have 45 days to respond to those.

Filing Requirements

The above documents must be filed by providing an original and 8 copies as required by the Commission's regulations to: Acting Secretary, Federal Energy Regulatory Commission, 888 First Street, NE, Washington, DC 20426.

Linwood A. Watson, Jr.,

Acting Secretary.

[FR Doc. 98–17199 Filed 6–26–98; 8:45 am]

BILLING CODE 6717–01–M

DEPARTMENT OF ENERGY

Federal Energy Regulatory Commission

[Docket No. MG98–12–000]

Gulf States Transmission Corporation; Notice of Filing

June 23, 1998.

Take notice that on June 15, 1998, Gulf States Transmission Corporation (Gulf States) submitted standards of conduct under Order Nos. 497 *et seq.*[1] and order Nos. 566 *et seq.*[2] Gulf States states that it is filing its standards of conduct to reflect El Paso Energy Corporation's recent acquisition of Gulf States.

Gulf States states that it has served copies of the filing upon all of its affected customers and state regulatory commissions.

Any person desiring to be heard or to protest said filing should file a motion to intervene or protest with the Federal Energy Regulatory Commission, 888 First Street, N.E., Washington, D.C. 20426, in accordance with Rules 211 or 214 of the Commission's Rules of Practice and Procedure (18 CFR 385.211 or 385.214). All such motions to intervene or protest should be filed on or before July 8, 1998. Protests will be considered by the Commission in determining the appropriate action to be taken but will not serve to make protestants parties to the proceeding. Any person wishing to become a party must file a motion to intervene. Copies of this filing are on file with the Commission and are available for public inspection.

Linwood A. Watson, Jr.,

Acting Secretary.

[FR Doc. 98–17194 Filed 6–26–98; 8:45 am]

BILLING CODE 6717–01–M

[1] Order no. 497, 53 FR 22139 (June 14, 1988), FERC Stats. & Regs. 1986–1990 ¶ 30,820 (1988); Order No. 497–A, *Order on rehearing,* 54 FR 52781 (December 22, 1989), FERC Stats & Regs. 1986–1990 ¶ 30,868 (1989); Order No. 497–B, *order extending sunset date,* 55 FR 53291 (December 28, 1990), FERC Stats & Regs. 1986–1990 ¶ 30,908 (1980); Order No. 497–C, *order extending sunset date,* 57 FR 9 (January 2, 1992), FERC Stats & Regs. 1991–1996 ¶ 30,934 (1991), rehearing denied, 57 FR 5815 (February 18, 1992), 58 FERC ¶ 61,139 (1992); Tenneco Gas v. FERC (affirmed in part and remanded in part), 969 F.2d 1187 (D.C. Cir. 1992); Order No. 497–D, *order on remand and extending sunset date,* FERC Stats & Regs. 1991–1996 ¶ 30,958 (December 4, 1992), 57 FR 58978 (December 14, 1992); Order No. 497–E, *order on rehearing and extending sunset date,* 59 FR 243 (January 4, 1994), 65 FERC ¶ 61,381 (December 23, 1993); Order No. 497–F, *order denying rehearing and granting clarification,* 59 FR 15336 (April 1, 1994), 66 FERC ¶ 61,347 (March 24, 1994); and Order No. 497–G, *order extending sunset date,* 59 FR 32884 (June 27, 1994), FERC Stats & Regs. 1991–1996 ¶ 30,996 (June 17, 1994).

[2] Standards of Conduct and Reporting Requirements for Transportation and Affiliate Transactions, Order No. 566, 59 FR 32885 (June 27, 1994), FERC Stats & Regs. 1991–1996 ¶ 30,997 (June 17, 1994); Order No. 566–A, *order on rehearing,* 59 FR 52896 (October 20, 1994), 69 FERC ¶ 61,044 (October 14, 1994); Order No. 566–B, *order on rehearing,* 59 FR 65707 (December 21, 1994), 69 FERC ¶ 61,334 (December 14, 1994).

DEPARTMENT OF ENERGY

Federal Energy Regulatory Commission

[Docket No. CP98–617–000]

Koch Gateway Pipeline Company; Notice of Application

June 23, 1998.

Take notice that on June 16, 1998, Koch Gateway Pipeline Company (Koch), P.O. Box 1478, Houston, Texas 77251 filed a request pursuant to Section 7(b) of the Natural Gas Act and Part 157 of the Commission's Regulations to abandon an obsolete natural gas transportation service authorized in Docket No. CP78–494[1] for Columbia Gas Transmission Corporation (Columbia Gas). The application is on file with the Commission and open to public inspection.

Koch proposes to abandon an obsolete transportation service formally provided to Columbia Gas pursuant to Koch's Rate Schedule X–111. Koch states that Columbia Gas concurs with the proposed abandonment and that no facilities are proposed to be abandoned.

Any person desiring to be heard or to make any protest with reference to said application should on or before July 14, 1998, file with the Federal Energy Regulatory Commission, 888 First Street, NE., Washington, DC 20426, a motion to intervene or a protest in accordance with the requirements of the Commission's Rules of Practice and Procedure (18 CFR 385.211 and 385.214) and the regulations under the Natural Gas Act (18 CFR 157.10). All protests filed with the Commission will be considered by it in determining the appropriate action to be taken but will not serve to make the protestants parties to the proceeding. Any person wishing to become a party to any proceeding herein must file a motion to intervene in accordance with the Commission's rules.

Take further notice that, pursuant to the authority contained in and subject to the jurisdiction conferred upon the Commission by Sections 7 and 15 of the Natural Gas Act and the Commission's Rules of Practice and Procedure, a hearing will be held without further notice before the Commission or its designee on this application if no motion to intervene is filed within the time required herein, if the Commission on its own review of the matter finds that permission and approval for the proposed abandonment are required by the public convenience and necessity. If no motion for leave to intervene is timely filed, or if the Commission on its own motion believes that formal hearing is required, further notice of such hearing will be duly given.

Under the procedure herein provided for, unless otherwise advised, it will be unnecessary for Koch to appear or to be represented at the hearing.

Linwood A. Watson, Jr.,

Acting Secretary.

[FR Doc. 98–17189 Filed 6–26–98; 8:45 am]

BILLING CODE 6717–01–M

[1] *See,* 5 FERC ¶ 61,173 (1978).

DEPARTMENT OF ENERGY

Federal Energy Regulatory Commission

[Docket No. CP98–621–000]

National Fuel Gas Supply Corporation; Notice of Request Under Blanket Authorization

June 23, 1998.

Take notice that on June 16, 1998, National Fuel Gas Supply Corporation (National Fuel), 10 Lafayette Square, Buffalo, New York 14203, filed in Docket No. CP98–621–000 a request

pursuant to Sections 157.205 and 157.211 of the Commission's Regulations under the Natural Gas Act (18 CFR 157.205, 157.211) for authorization to relocate sales tap facilities used to render service to an existing firm transportation customer, National Fuel Gas Distribution Corporation (Distribution), located in Elk County, Pennsylvania, under National Fuel's blanket certificate issued in Docket No. CP83–4–000, pursuant to Section 7(c) of the Natural Gas Act, all as more fully set forth in the request that is on file with the Commission and open to public inspection.

National Fuel proposes to relocate an existing sales tap, designated as Station T–No. 1374, utilized for transportation service for Distribution, located in Jefferson County, Pennsylvania. National Fuel states that the new station will be located in Elk County, Pennsylvania, approximately three miles east of the existing station, which will be moved in its entirety. National Fuel declares that it is necessary to relocate Station T–No. 1374 because the line it is currently located on, Line F–97(S), is in a deteriorated condition and is scheduled for abandonment. National Fuel asserts that it will submit an application pursuant to Section 7(b) of the Commission's Regulations in the near future with regard to Line F–97(S).

National Fuel declares that it anticipates the flow at the new station, also designated Station T–1374, will be 1,953 Mcf per day with a maximum capacity estimated to be 4,583 Mcf per day. National Fuel states the cost of relocating this station is estimated to be $125,000.

Any person or the Commission's staff may, within 45 days after issuance of the instant notice by the Commission, file pursuant to Rule 214 of the Commission's Procedural Rules (18 CFR 385.214) a motion to intervene or notice of intervention and pursuant to Section 157.205 of the Regulations under the Natural Gas Act (18 CFR 157.205) a protest to the request. If no protest is filed within the time allowed therefor, the proposed activity shall be deemed to be authorized effective the day after the time allowed for filing a protest. If a protest if filed and not withdrawn within 30 days after the time allowed for filing a protest, the instant request shall be treated as an application for authorization pursuant to Section 7 of the Natural Gas Act.

Linwood A. Watson, Jr.,

Acting Secretary.

[FR Doc. 98–17190 Filed –26–98; 8:45 am]

BILLING CODE 6717–01–M

DEPARTMENT OF ENERGY

Federal Energy Regulatory Commission

[Docket No. CP98–623–000]

NorAm Gas Transmission Company; Notice of Application to Abandon

June 23, 1998.

Take notice that on June 17, 1998, NorAm Gas Transmission Company (NorAm), P.O. Box 21734, Shreveport, Louisiana 71151 filed under Section 7(b) of the Natural Gas Act, for authority to abandon, ownership interests in two offshore Louisiana gathering facilities. The application is on file with the Commission and open to public inspection.

Specifically, NorAm proposes to abandon its 20.83% ownership interest in a 10.34 mile, 20-inch gathering line extending from Block 57 to Block 32 in the Eugene Island field. NorAm also proposes to abandon its 18.79% ownership interest in a 1.45 mile, 12-¾–inch gathering line extending from block 73 to Block 72 in the Main Pass Field.

Any person desiring to be heard or make any protest with reference to said application should on or before July 14, 1998, file with the Federal Energy Regulatory Commission, 888 First Street, N.E., Washington D.C. 20426, a motion to intervene or a protest in accordance with the requirements of the Commission's Rules of Practice and Procedure (18 CFR 385.214 or 385.211) and the regulations under the Natural Gas Act (18 CFR 157.10). All protests filed with the Commission will be considered by it in determining the appropriate action to be taken but will not serve to make the protestants parties to the proceeding. Any person wishing to become a party to a proceeding or to participate as a party in any hearing therein must file a motion to intervene in accordance with the Commission's Rules.

Take further notice that, pursuant to the authority contained in and subject to the jurisdiction conferred upon the Federal Energy Regulatory Commission by Sections 7 and 15 of the Natural Gas Act and the Commission's Rules of Practice and Procedure, a hearing will be held without further notice before the Commission or its designee on this application if no motion to intervene is filed within the time required, or if the Commission on its own review of the matter finds that permission and approval of the proposed abandonment are required by the public convenience and necessity. If a motion for leave to intervene is timely filed, or if the Commission on its own motion believes that a formal hearing is required, further notice of such hearing will be duly given.

Under the procedure herein provided for, unless otherwise advised, it will be unnecessary for NorAm to appear or be represented at the hearing.

Linwood A. Watson, Jr.,

Acting Secretary.

[FR Doc. 98–17191 Filed 6–26–98; 8:45 am]

BILLING CODE 6717–01–M

DEPARTMENT OF ENERGY

Federal Energy Regulatory Commission

[Docket No. RP98–253–000]

Williston Basin Interstate Pipeline Company; Notice of Tariff Filing

June 23, 1998.

Take notice that on June 19, 1998, Williston Basin Interstate Pipeline Company (Williston Basin), tendered for filing revised tariff sheets to its FERC Gas Tariff, Second Revised Volume No. 1, the tariff sheets listed on Appendix A to the filing.

Williston Basin states that the revised tariff sheets are being filed to make minor tariff modifications and housekeeping changes necessary to correct and clarify its Tariff as more fully explained in the filing.

Williston Basin is requesting that the tariff sheets be made effective on August 1, 1998.

Any person desiring to be heard or to protest this filing should file a motion to intervene or a protest with the Federal Energy Regulatory Commission, 888 First Street, NE, Washington, DC 20426, in accordance with Sections 385.214 and 385.211 of the Commission's Rules and Regulations. All such motions or protests must be filed as provided in Section 154.210 of the Commission's Regulations. Protests will be considered by the Commission in determining the appropriate action to be taken, but will not serve to make protestants parties to the proceedings. Any person wishing to become a party must file a motion to intervene. Copies of this filing are on file with the Commission and are available for public inspection in the Public Reference Room.

Linwood A. Watson, Jr.,

Acting Secretary.

[FR Doc. 98–17200 Filed 6–26–98; 8:45 am]

BILLING CODE 6717–01–M

DEPARTMENT OF ENERGY

Federal Energy Regulatory Commission

[Docket No. SA98–85–000]

Charles B. Wilson, Jr., Inc., et al.; Notice of Petition for Dispute Resolution

June 23, 1998.

Take notice that, on June 15, 1998, Charles B. Wilson, Jr., Inc., Powell Petroleum, Inc., Billy R. Powell, Bronco, Ltd., Charles Bruce Wilson, III and Lea Wilson (collectively: Applicants) filed a petition requesting the Commission to resolve the dispute they have with Colorado Interstate Gas Company (CIG) as to whether Applicants owe CIG any Kansas ad valorem tax refunds. Applicants request that the Commission find that they have no Kansas ad valorem tax refund liability to CIG for the period from 1983 to 1988, based on a 1988 Settlement Agreement between Applicants and CIG (1988 Settlement). Applicants' petition is on file with the Commission and open to public inspection.

The Commission, by order issued September 10, 1997, in Docket No. RP97–369–000 *et al.*,[1] on remand from the DC Circuit Court of Appeals,[2] required first sellers to refund the Kansas ad valorem tax reimbursements to the pipelines, with interest, for the period from 1983 to 1988. In its January 28, 1998 Order Clarifying Procedures [82 FERC ¶ 61,059 (1998)], the Commission stated that producers (i.e., first sellers) could file dispute resolution requests with the Commission, asking the Commission to resolve the dispute with the pipeline over the amount of Kansas ad valorem tax refunds owed.

Applicants state that the CIG has attempted to collect Kansas ad valorem tax refunds from them for the period from 1983 to 1988. Applicants contend that these efforts are a breach of their 1988 Settlement with CIG, because the 1988 Settlement released Applicants and CIG from all claims against each other relating to Applicants' gas purchase agreement with CIG. Applicants also state that they will be establishing an interest bearing escrow account in which they will place the involved principal and interest (excluding royalty refunds). Applicant requests that in the event the 1988 Settlement does not resolve the issue refund liability, then Applicant requests that Commission grant an adjustment relieving Applicant from such refund liability. Applicants also request that the Commission establish a briefing schedule so that Applicants can fully advise the Commission of their position.

Any person desiring to be heard or to make any protest with reference to said petition should on or before 15 days after the date of publication in the **Federal Register** of this notice, file with the Federal Energy Regulatory Commission, 888 First Street, NE, Washington, DC 20426, a motion to intervene or a protest in accordance with the requirements of the Commission's Rules of Practice and Procedure (18 CFR 385.214, 385.211, 385.1105, and 385.1106). All protests filed with the Commission will be considered by it in determining the appropriate action to be taken but will not serve to make the protestants parties to the proceeding. Any person wishing to become a party to a proceeding or to participate as a party in any hearing therein must file a motion to intervene in accordance with the Commission's Rules.

Linwood A. Watson, Jr.,

Acting Secretary.

[FR Doc. 98–17201 Filed 6–26–98; 8:45 am]

BILLING CODE 6717–01–M

[1] See 80 FERC ¶ 61,264 (1997); order denying reh'g issued January 28, 1998, 82 FERC ¶ 61,058 (1998).

[2] *Public Service Company of Colorado* v. *FERC*, 92 F.3d 1478 (D.C. 1996), cert. denied, Nos. 96–954 and 96–1230 (65 U.S.L.W. 3751 and 3754, May 12, 1997).

DEPARTMENT OF ENERGY

Federal Energy Regulatory Commission

[Project Nos. 2375–013, Maine and 8277–008, Maine]

International Paper Company Otis Hydroelectric Company; Notice of Availability of Final Environmental Assessment

June 23, 1988.

In accordance with the National Environmental Policy Act of 1969 and the Federal Energy Regulatory Commission's (Commission) regulations, 18 CFR Part 380 (Order No. 486, 52 FR 47897), the Office of Hydropower Licensing has reviewed the applications for major new licenses for the Riley-Jay-Livermore Project and Otis Hydroelectric Project located on the Androscoggin River in Franklin, Androscoggin, and Oxford Countries, near the Towns of Canton, Jay, Livermore, and Livermore Falls, Maine, and has prepared a final Environmental Assessment (EA) for re-licensing the projects. In the EA, the Commission staff has analyzed the potential environmental impacts of the projects and has concluded that approval of the projects, with appropriate mitigative measures, would not constitute a major federal action significantly affecting the quality of the human environment.

Copies of the EA are available for review in the Public Reference Branch, Room 2–A, of the Commission's offices at 888 First Street, NE., Washington DC 20426.

For further information, please contact Monte J. TerHaar at (202) 219–2768 or Patti-Leppert Slack at (202) 219–2767.

Linwood A. Watson, Jr.,

Acting Secretary.

[FR Doc. 98–17186 Filed 6–26–98; 8:45 am]

BILLING CODE 6717–01–M

DEPARTMENT OF ENERGY

Federal Energy Regulatory Commission

[Project Nos. 1984–056 Wisconsin and 11162–002 Wisconsin]

Wisconsin River Power Company, Wisconsin Power and Light Company; Notice of Availability of Draft Environmental Assessment

June 23, 1998.

In accordance with the National Environmental Policy Act of 1969 and the Federal Energy Regulatory Commission's (Commission's) regulations, 18 CFR Part 380 (Order No. 486, 52 FR 47897), the Office of Hydropower Licensing has reviewed the application for new major license for the Petenwell-Castle Rock Hydroelectric Project located on the Wisconsin River in Woods, Juneau, and Adams Counties near Necedah, Wisconsin, and the application for original major license for the Prairie du Sac Hydroelectric Project located on the Wisconsin River in Sauk and Columbia Counties near Prairie du Sac, Wisconsin, and has prepared a Draft Environmental Assessment (DEA) for the proposed licensing actions. In the DEA, the Commission's staff has analyzed the potential environmental impacts of the proposed licenses, and has concluded that approval of the proposed licenses, with appropriate measures, would not constitute major federal actions significantly affecting the quality of the human environment.

Copies of the DEA are available for review in the Public Reference Branch, Room 2A of the Commission's offices at 888 First Street, N.E., Washington, D.C. 20426.

Comments should be filed within 45 days from the date of this notice and should be addressed to David P. Boergers, Acting Secretary, Federal

Energy Regulatory Commission, 888 First Street, N.E., Washington, D.C. 20426. Please affix Project No. 1984–056 to all comments on the Petenwell-Castle Rock Project, and Project No. 11162–002 to all comments on the Prairie du Sac Project. For further information, please contact Peter A. Leitzke at (202) 219–2803.

Linwood A. Watson, Jr.,

Acting Secretary.

[FR Doc. 98–17185 Filed 6–26–98; 8:45 am]

BILLING CODE 6717–01–M

DEPARTMENT OF ENERGY

Federal Energy Commission

[Docket No. CP98–363–000]

Etowah LNG Company, L.L.C.; Notice of Intent To Prepare an Environmental Assessment for the Proposed Etowah LNG Project; Request for Comments on Environmental Issues; and Notice of Site Visit, Public Scoping Meeting, and Technical Conference

June 23, 1998.

The staff of the Federal Energy Regulatory Commission (FERC or Commission) will prepare an environmental assessment (EA) that will discuss the environmental impacts of the construction and operation of the liquefied natural gas (LNG) storage plant and associated pipeline facilities proposed in the Etowah LNG Project.[1] This EA will be used by the Commission in its decision-making process to determine whether the project is in the public convenience and necessity.

If you are a landowner receiving this notice, you may be contacted by an Etowah LNG Company, L.L.C. (Etowah) representative about the acquisition of an easement to construct, operate, and maintain the proposed facilities. Etowah would seek to negotiate a mutually acceptable agreement. However, if the project is approved by the Commission, that approval conveys with it the right of eminent domain. Therefore, if easement negotiations fail to produce an agreement, Etowah could initiate condemnation proceedings in accordance with state law. A fact sheet addressing a number of typically asked questions, including the use of eminent domain, is attached to this notice as appendix 1.[2]

Summary of the Proposed Project

Etowah seeks authority to construct and operate an LNG storage plant and associated pipeline facilities in Polk County, Georgia. The proposed LNG plant would be located approximately 4.5 miles northeast of Rockmart, Georgia and 40 miles northwest of Atlanta, Georgia. The purpose of the facilities is to meet winter peak shaving requirements, including those of Atlanta Gas Light Company (AGLC) and the City of Austell Gas System.

The primary components of the LNG plant would include:

- A 750,000-barrel double-wall metal LNG storage tank with a gas-equivalent capacity of 2.5 billion cubic feet;
- A pretreatment and liquefaction system with a capacity of 15 million cubic feet per day (MMcfd);
- A boil-off recompression system;
- A vaporization and sendout system with a design capacity of 300 MMcfd with standby vaporization capacity of up to 200 MMcfd;
- Measurement facilities;
- Associated control and hazard-protection sustems; and
- A trucking system capable of loading 20,000 gallons per hour..

Etowah also proposes to construct:

- Approximately 12.5 miles of 12.75-inch-diameter pipeline (Etowah pipeline) in Polk County, Georgia. The Etowah pipeline would be adjacent to and overlap an existing utility right-of-way for 83 percent of its route; and
- A 1.3-mile-long permanent access road and new bridge extending from the plant site northward to Davis Town Road.

The LNG storage tank would be approximately 149 feet in height and 250 in diameter. The LNG tank area would be surrounded by an earthen berm that would slope towards an impoundment basin that together form the spill containment system. The proposed project facilities would be designed, constructed, operated, and maintained to comply with the U.S. Department of Transportation Federal Safety Standards for Liquefied Natural Gas Facilities (49 Code of Federal Regulations [CFR] Part 193). The facilities constructed at the site would also meet the National Fire Protection Association 59A LNG standards.

The following related nonjurisdictional facilities would be constructed:

- AGLC would construct and operate approximately 16.8 miles of 24-inch-diameter pipeline (Etowah-Mars Hill Road pipeline) in Polk, Paulding, and Cobb Counties, Georgia connecting the LNG plant to AGLC's distribution system. The Etowah-Mars Hill Road pipeline would be adjacent to and overlap an existing utility right-of-way for 95 percent of its route; and
- Georgia Power would construct and operate an approximately 0.9-mile-long 115 kilovolt (kV) overhead electric powerline collocated with AGLC's pipeline, and a 0.4-acre 115 kV to 4,160 volt substation connecting the LNG plant to the new Georgia Power electric powerline in Polk County, Georgia.

All natural gas received at the LNG facility for liquefaction and storage would be shipped from Southern Natural Gas Company's (Southern) system through the Etowah pipeline. Vaporized natural gas would be transported from the LNG facility either through the Etowah pipeline to Southern's system or through the Etowah-Mars Hill Road pipeline to AGLC's system.

The location of the project facilities is shown in appendix 2.[2] If you are interested in obtaining procedural information, please write to the Secretary of the Commission.

Land Requirements for Construction

Construction of the LNG plant would affect approximately 50 acres of an 833-acre site owned by Etowah. An additional 7.8 acres would be disturbed during construction of the permanent access road to the site. The 57.8 acres of land for the plant site and access road would be permanently affected by the project.

Construction of the proposed Etowah pipeline would affect approximately 132.3 acres of land, including temporary extra work areas. Following construction, about 50.5 acres of land would be maintained as new permanent right-of-way.

Construction of the related nonjurisdictional facilities would affect approximately 106.4 acres of land. Of this, about 0.4 acre would be required for the substation, 4.2 acres would be required for the powerline, and 101.8 acres would be required for the Etowah-Mars Hill Road pipeline. Following construction, about 4.6 acres would be required for the substation and permanent right-of-way for the powerline and 61.1 acres would be required for the permanent right-of-way for the Etowah-Mars Hill Road pipeline.

The EA Process/Environmental Issues

The National Environmental Policy Act (NEPA) requires the Commission to take into account the environmental

[1] Etowah LNG Company, L.L.C.'s application was filed with the Commission under Section 7 of the Natural Gas Act and Part 157 of the Commission's regulations.

[2] The appendices referenced in this notice are not being printed in the **Federal Register**. Copies are available from the Commission's Public Reference and Files Maintenance Branch, 888 First Street, N.E., Washington, DC 20426, or call (202) 208–1371. Copies of the appendices were sent to all those receiving this notice in the mail.

impacts that could result from an action whenever it considers the issuance of a Certificate of Public Convenience and Necessity. NEPA also requires us to discover and address concerns the public may have about proposals. We call this ''scoping''. The main goal of the scoping process is to focus the analysis in the EA on the important environmental issues. By this Notice of Intent, the Commission requests public comments on the scope of the issues it will address in the EA. All comments received are considered during the preparation of the EA. State and local government representatives are encouraged to notify their constituents of this proposed action and encourage them to comment on their areas of concern.

The EA will discuss impacts that could occur as a result of the construction and operation of the proposed project under the general headings listed below. We have already identified several issues that we think deserve attention based on a preliminary review of the proposed facilities and the environmental information provided by Etowah. This preliminary list of issues may be changed based on your comments and our analysis.

- Geology and Soils:

—Effect of blasting and disposal of blast rock.
—Landslide potential (moderate incidence with high susceptibility).
—Erosion control.
—Facility site and right-of-way restoration.

- Water Resources and Fisheries:

—Groundwater withdrawal and discharge to surrounding surface waters.
—Effect of blasting on potable water sources.
—Effect of permanent access road and bridge on Hills Creek.
—Crossings of 35 perennial waterbodies.
—Impact on Silver Creek, a secondary trout stream.
—Hydrostatic test water rates and discharge locations.

- Vegetation and Wildlife:

Effect of facility construction and operation on wildlife and fisheries habitat, including federally and state-listed threatened and endangered, or sensitive animal and plant species and their habitats.
—Impact on forested wetlands.
—Clearing of upland forest.

- Cultural Resources:

—Effect on historic and prehistoric sites.
—Native American and tribal concerns.

- Socioeconomics:

—Impact of a peak workforce of about 300 workers on housing and demands for services in the surrounding area.
—Impact of timber removal on landowners.
—Long-term effects of increased employment and tax benefits on the local economy.

- Land Use and Transportation:

—Crossing of one recreation area leased by the Georgia Department of Natural Resources.
—Effect on 18 residences within 50 feet of the construction work area.
—Visual effect of the storage tank on the surrounding area.
—Impact on future county plans (e.g., schools, roads).
—Consistency with local land use plans and zoning
—Impact of construction and operation traffic

- Air Quality and Noise:

—Air quality and noise impacts associated with construction and operation.

- Public Safety:

—Compliance with 49 CFR 193 for exclusion zones (thermal and vapor gas dispersion), siting criteria, seismic criteria, and cryogenic criteria.
—Consequences of a major spill.
—Design and operation of the firewater system.
—Assessment of hazards associated with natural gas pipelines.

- Cummulative Impact:

—Assessment of the combined effect of the proposed project with other projects which have been or may be proposed in the same region and similar time frame.

We will also evaluate possible site, routing, and system alternatives to the proposed project or portions of the project, and make recommendations on how to lessen or avoid impacts on the various resource areas.

Our independent analysis of the issues will be in the EA. Depending on the comments received during the scoping process, the EA may be published and mailed to Federal, state, and local agencies, public interest groups, interested individuals, affected landowners, newspapers, libraries, and the Commission's official service list for this proceeding. A comment period will be allotted for review if the EA is published. We will consider all comments on the EA before we make our recommendations to the Commission.

To ensure your comments are considered, please carefully follow the instructions in the public participation section of this notice.

Public Participation

You can make a difference by providing us with your specific comments or concerns about the project. By becoming a commentor, your concerns will be addressed in the EA and considered by the Commission. You should focus on the potential environmental effects of the proposal, alternatives to the proposal (including alternative sites and routes, and measures to avoid or lessen environmental impact). The more specific your comments, the more useful they will be. Please carefully follow these instructions to ensure that your comments are received in time and properly recorded:

- Send two copies of your letter to: David P, Boergers, Acting Secretary, Federal Energy Regulatory Commission, 888 First St., N.E., Room 1A, Washington, DC 20426.
- Label one copy of the comments for the attention of the Environmental Review and Compliance Branch, PR–11.1;
- Reference Docket No. CP98–363–999; and
- Mail your comments so that they will be received in Washington, DC on or before July 24, 1998.

Beyond asking for written comments, we invite you to attend our public scoping meeting that will be held on July 13, 1998, at 7:00 p.m. at the Rockmart Community Center, 604 Goodyear Street, Rockmart, Georgia. This public meeting will be designed to provide you with more detailed information and another opportunity to offer your comments on the proposed project. The staff will also visit the proposed LNG plant site and pipeline routes on July 13, 1998.

On July 14, 1998, at 8:30 a.m., the FERC staff will meet with representatives of Etowah to conduct a cryogenic design and engineering review of the proposed LNG facilities. This technical conference will be held at the Northwest Atlanta Hilton, 2055 South Park Place, Atlanta, Georgia. The discussion will initially be limited to the staff and members of the applicant's staff who have expertise in the given topics. Other attendees will be given the opportunity to ask questions on the above issues after the initial discussions have concluded.

Becoming an Intervenor

In addition to involvement in the EA scoping process, you may want to become an official party to the proceeding known as an ''intervenor''.

Intervenors play a more formal role in the process. Among other things, intervenors have the right to receive copies of case-related Commission documents and filings by other intervenors. Likewise, each intervenor must provide 14 copies of its filings to the Secretary of the Commission and must send a copy of its filings to all other parties on the Commission's services list for this proceeding. If you want to become an intervenor you must file a motion to intervene According to Rule 214 of the Commission's Rules of Practice and Procedure (18 CFR 385.214) (see appendix 3). Only intervenors have the right to seek rehearing of the Commission's decision.

The date for filing timely motions to intervene in this proceeding has passed. Therefore, parties now seeking to file late interventions must show good cause, as required by section 385.214(b)(3), why this time limitation should be waived. Environmental issues have been viewed as good cause for late internvention. You do not need intervenor status to have your environmental comments considered.

Additional information about the proposed project, site visit, and technical conference is available from Mr. Paul McKee of the Commission's Office of External Affairs at (202) 208–1088.

Linwood A. Watson, Jr.,

Acting Secretary.

[FR Doc. 98–17183 Filed 6–26–98; 8:45 am]

BILLING CODE 6717–01–M

DEPARTMENT OF ENERGY

Federal Energy Regulatory Commission

Notice Tendered for Filing With the Commission

June 23, 1998.

Take notice that the following hydroelectric application has been filed with the Commission and is available for public inspection:

a. *Type of Application:* Major New License (Tendered Notice).

b. *Project No.:* 372–008.

c. *Date filed:* June 12, 1998.

d. *Applicant:* Southern California Edison Company.

e. *Name of Project:* Lower Tule River Hydroelectric Project.

f. *Location:* On the North and South Forks of the Middle Fork Tule River in Tulare County, California, partially within the boundaries of the Sequoia National Forest.

g. *Filed Pursuant to:* Federal Power Act 16 USC 791(a)–825(r).

h. *Applicant Contact:* Mr. C. Edward Miller, Manager, Hydro Generation, Southern California Edison Company, 2244 Walnut Grove Avenue, P.O. Box 800, Rosemead, California 91770, (626) 302–1564.

i. *FERC Contact:* Nan Allen at (202) 219–2938.

j. *Description of Project:* The existing project consists of: (1) a 15-foot-high, concrete dam; (2) a 5-foot-high, rubble masonry dam; (3) a 31,802-foot-long flow line; (4) a 2,815-foot-long steel penstock; (5) a 3.37 acre-foot forebay; (6) a powerhouse containing two turbine-generator units with a total installed capacity of 2,520 kilowatts (kW); and (7) a 2,352-foot-long tailrace.

k. Under Section 4.32(b)(7) of the Commission's regulations (18 CFR), if any resource agency, Indian Tribe, or person believes that the applicant should conduct an additional scientific study to form an adequate factual basis for a complete analysis of the application on its merits, they must file a request for the study with the Commission, not later than 60 days after the application is filed, and must serve a copy of the request on the applicant.

l. With this notice, we are initiating consultation with the California State Historic Preservation Officer, as required by Section 106, National Historic Preservation Act, and the regulations of the Advisory Council on Historic Preservation, 36 CFR 800.4.

Linwood A. Watson, Jr.,

Acting Secretary.

[FR Doc. 98–17188 Filed 6–26–98; 8:45 am]

BILLING CODE 6717–01–M

DEPARTMENT OF ENERGY

Federal Energy Regulatory Commission

Sunshine Act Meeting

FEDERAL REGISTER CITATION OF PREVIOUS ANNOUNCEMENT: June 22, 1998, 63 FR 33924.

PREVIOUSLY ANNOUNCED TIME AND DATE OF MEETING: June 24, 1998, 10:00 a.m.

CHANGE IN THE MEETING: The following Docket Numbers and Companies have been added on the Agenda scheduled for the June 24, 1998 meeting.

Item No.	Docket No. and company
CAE–19	EC96–19–007 and ER96–1663–008, Pacific Gas and Electric Company, Southern California Edison Company and San Diego Gas & Electric Company.
	ER98–441–000 and 001, Southern California Edison Company.
	ER98–495–000 and 001, Pacific Gas and Electric Company.
	ER98–496–000 and 001, San Diego Gas & Electric Company.

David P. Boergers,

Acting Secretary.

[FR Doc. 98–17324 Filed 6–25–98; 11:39 am]

BILLING CODE 6717–01–M

DEPARTMENT OF ENERGY

Federal Energy Regulatory Commission

[Docket No. GT98–57–000]

Algonquin Gas Transmission Company; Notice of Refund Report

June 23, 1998.

Take notice that on June 19, 1998, Algonquin Gas Transmission Company (Algonquin) tendered for filing a refund report pursuant to Ordering Paragraph (C) of the Commission's February 22, 1995 order in Gas Research Institute (GRI), Docket No. RP95–124–000.

Algonquin states that on May 29, 1998, Algonquin received its share of the GRI refund totaling $866,955.00.

Algonquin states that on June 6, 1998, each eligible firm customer was redited its pro rata share of the GRI refund.

Algonquin states that copies of the filing were served on each of its affected customers and interested state commissions.

Any person desiring to be heard or to protest this filing should file a motion to intervene or a protest with the Federal Energy Regulatory Commission, 888 First Street, NE, Washington, DC 20426, in accordance with Sections 385.214 and 385.211 of the Commission's Rules and Regulations. All such motions or protests must be filed on or before June 30, 1998. Protests will be considered by the Commission in determining the appropriate action to be taken, but will not serve to make protestants parties to the proceedings. Any person wishing to become a party must file a motion to intervene. Copies of this filing are on file with the Commission and are available for public inspection in the Public Reference Room.

Linwood A. Watson, Jr.,

Acting Secretary.

[FR Doc. 98–17193 Filed 6–26–98; 8:45 am]

BILLING CODE 6717–01–M

DEPARTMENT OF ENERGY

Federal Energy Regulatory Commission

[Docket No. CT98–56–000]

Iroquois Gas Transmission System, L.P.; Notice of GRI Refunds

June 23, 1998.

Take notice that on June 19, 1998, Iroquois Gas Transmission System, L.P. (Iroquois) tendered for filing a report of Gas Research Institute (GRI) refunds to Iroquois for the period from January 1, 1997 to December 31, 1997.

Iroquois states that the refund credits have been based on the total refund from GRI to Iroquois of $309,562 and that credits were given to all eligible firm customers.

Iroquois states that copies of its filing were served on all jurisdictional customers and interested state commissions.

Any person desiring to be heard or to protest this filing should file a motion to intervene or protest with the Federal Energy Regulatory Commission, 888 First Street, NE, Washington, DC 20426, in accordance with Sections 385.214 and 385.211 of the Commission's Rules and Regulations. All such motions or protests must be filed on or before June 30, 1998. Protests will be considered by the Commission in determining the appropriate action to be taken, but will not serve to make protestants parties to the proceedings. Any person wishing to become a party must file a motion to intervene. Copies of this filing are on file with the Commission and are available for public inspection in the Public Reference Room.

Linwood A. Watson, Jr.,

Acting Secretary.

[FR Doc. 98–17192 Filed 6–26–98; 8:45 am]

BILLING CODE 6717–01–M

ENVIRONMENTAL PROTECTION AGENCY

[FRL–6117–6]

Gulf of Mexico Program Management Committee Meeting

AGENCY: Environmental Protection Agency (EPA).

ACTION: Notice of meeting of the Gulf of Mexico Program Management Committee.

SUMMARY: The Gulf of Mexico Program's Management Committee will hold a meeting at the Nassau Bay Hilton, Houston, Texas.

FOR FURTHER INFORMATION CONTACT: James D. Giattina, Director, Gulf of Mexico Program Office, Building 1103, Room 202, Stennis Space Center, MS 39529–6000 at (228) 688–1172.

SUPPLEMENTARY INFORMATION: A meeting of the Gulf of Mexico Program Management Committee will be held at the Nassau Bay Hilton, Houston, Texas. The committee will meet from 1:00 P.M. to 5:00 P.M. on July 22 and from 8:30 A.M. to 3:00 P.M. on July 23. Agenda items will include: Multi-Year Performance Plan Review; Overview of Clean Water Action Plan Implementation; FY 1999 Funding Guidance criteria discussion; and Gulf of Mexico Program/Gulf NEP Compact overview.

The meeting is open to the public.

James D. Giattina,

Director, Gulf of Mexico Program.

[FR Doc. 98–17261 Filed 6–26–98; 8:45 am]

BILLING CODE 6560–50–P

ENVIRONMENTAL PROTECTION AGENCY

[FRL–6117–5]

Gulf of Mexico Program Citizens Advisory Committee Meeting

AGENCY: Environmental Protection Agency (EPA).

ACTION: Notice of meeting of the Gulf of Mexico Program Citizens Advisory Committee.

SUMMARY: The Gulf of Mexico Program's Citizens Advisory Committee will hold a meeting at the Nassau Bay Hilton, Houston, Texas.

FOR FURTHER INFORMATION CONTACT: James D. Giattina, Director, Gulf of Mexico Program Office, Building 1103, Room 202, Stennis Space Center, MS 39529–6000 at (228) 688–1172.

SUPPLEMENTARY INFORMATION: A meeting of the Gulf of Mexico Program Citizens Advisory Committee will be held at the Nassau Bay Hilton, Houston, Texas. The committee will meet from 10:00 A.M. to 5:00 P.M. on July 21. Agenda items will include: Multi-Year Performance Plan and FY 1999 Funding Guidance discussion; Coastal watershed/estuary approach to assisting Gulf States; and CAC Membership & attendance update and discussion.

The meeting is open to the public.

James D. Giattina,

Director, Gulf of Mexico Program.

[FR Doc. 98–17262 Filed 6–26–98; 8:45 am]

BILLING CODE 6560–50–U

ENVIRONMENTAL PROTECTION AGENCY

[FRL–6117–2]

Regulatory Reinvention (XL) Pilot Projects

AGENCY: Environmental Protection Agency (EPA).

ACTION: Notice of availability of Lucent Project XL Draft Umbrella Final Project Agreement and Related Documents.

SUMMARY: EPA is today requesting comments on a proposed Project XL Final Project Agreement (FPA) for Lucent Technologies, Inc. The FPA is a voluntary agreement developed collaboratively by Lucent, stakeholders, the Commonwealth of Pennsylvania, and EPA. Project XL, announced in the **Federal Register** on May 23, 1995 (60 FR 27282), gives regulated sources the flexibility to develop alternative strategies that will replace or modify specific regulatory requirements on the condition that they produce greater environmental benefits. EPA has set a goal of implementing a total of fifty projects undertaken in full partnership with the states.

The draft FPA is based on an existing third-party certified environmental management system (EMS) for Lucent's entire global microelectronics business unit, in fulfillment of the ISO 14001 standard for EMSs. The draft FPA would allow Lucent to use the existing EMS as a framework for developing specific proposals involving regulatory flexibility such as simplifying permitting, record keeping, and reporting requirements, while driving continual improvement and pollution prevention programs. The draft FPA would provide a ''test bed'' to determine the broad applicability of ISO 14001 as a vehicle for determining and managing regulatory flexibility while achieving superior environmental performance.

Lucent's proposed project is a multi-regional attempt to incorporate environmental management practices across the entire business unit. The parties anticipate that the EMS will foster superior environmental performance by identifying opportunities to reduce Lucent's environmental impact. EPA Regions 3 and 4 are intended sites for facility-specific projects. Each facility-specific addendum to the umbrella FPA will also demonstrate superior environmental performance. The regulatory flexibility necessary to implement specific projects will be discussed in each facility-specific addendum.

As part of its EMS, Lucent has established facility-specific Local Environmental Advisory Groups (LEAGs) for all of its facilities globally. Each LEAG is composed of local stakeholders including environmental organizations, community groups, employees, and other interested citizens. The LEAGs provide input on the XL project and the EMS. The LEAGs unanimously approved the draft umbrella FPA.

DATES: The period for submission of comments ends on July 29, 1998.

ADDRESSES: All comments on the draft Final Project Agreement should be sent to: Rich Kampf, U.S. EPA, Region III, 841 Chestnut Street (3WP00), Philadelphia, PA 19107, or L. Nancy Birnbaum, U.S. EPA, 401 M Street, SW, Room 1025WT (1802), Washington, DC 20460. Comments may also be faxed to Mr. Kampf at (215) 566–2301 or Ms. Birnbaum at (202) 401–2474. Comments will also be received via electronic mail sent to: kampf.rich@epamail.epa.gov or birnbaum.nancy@epamail.epa.gov.

FOR FURTHER INFORMATION CONTACT: To obtain a copy of the proposed Final Project Agreement or Fact Sheet, contact: Rich Kampf, U.S. EPA, Region III, 841 Chestnut Street (3WP00), Philadelphia, PA 19107, or L. Nancy Birnbaum, U.S. EPA, 401 M Street, SW, Room 1025WT (1802), Washington, DC 20460. The documents are also available via the Internet at the following location: ''http://www.epa.gov/ProjectXL''. In addition, public files on the Project are located at EPA Region III in Philadelphia. Questions to EPA regarding the documents can be directed to Rich Kampf at (215) 566–2105 or L. Nancy Birnbaum at (202) 260–2601. To be included on the Lucent Project XL mailing list to receive information about future public meetings, XL progress reports and other mailings from Lucent on the XL Project, contact: Debra Hennelly, Lucent Technologies, Inc., 219 Mount Airy Road, Room 2F236, P.O. Box 612, Basking Ridge, NJ 07920–0612. Ms. Hennelly can also be reached by telephone at (908) 953–4960. For information on all other aspects of the XL Program contact Christopher Knopes at the following address: Office of Reinvention, United States Environmental Protection Agency, Room 1029, 401 M Street, SW (1802), Washington, DC 20460. Additional information on Project XL, including documents referenced in this notice, other EPA policy documents related to Project XL, regional XL contacts, application information, and descriptions of existing XL projects and proposals, is available via the Internet at ''http://www.epa.gov/ProjectXL'' and via an automated fax-on-demand menu at (202) 260–8590.

Dated: June 23, 1998.

Lisa Lund,

Deputy Associate Administrator for Reinvention Programs, Office of Reinvention.

[FR Doc. 98–17263 Filed 6–26–98; 8:45 am]

BILLING CODE 6560–50–U

FEDERAL COMMUNICATIONS COMMISSION

[DA 98–1010; Report No. AUC–98–18–B (Auction No. 18)]

Auction of the Phase II 220 MHz Service Licenses; Scheduled for September 15, 1998—Minimum Opening Bids and Other Procedural Issues

AGENCY: Federal Communications Commission.

ACTION: Notice.

SUMMARY: This Public Notice announces the procedures and minimum opening bids for the upcoming Phase II 220 MHz Service (''220 MHz Service'') auction. On January 13, 1998, the Commission released a Public Notice, (''220 MHz Public Notice''), seeking comment on the establishment of reserve prices or minimum opening bids for the 220 MHz Service auction. In addition, the Commission also sought comment on a number of procedures to be used in the 220 MHz Service auction.

EFFECTIVE DATES: June 29, 1998.

FOR FURTHER INFORMATION CONTACT: Lisa Hartigan, Bob Reagle, or Frank Stilwell, Auctions and Industry Analysis Division, Wireless Telecommunications Bureau at (202) 418–0660, Scott A. Mackoul, Commercial Wireless Division at (202 418–7240, or Marty Liebman, Policy Division, Wireless Telecommunications Bureau at (202 418–1310.

SUPPLEMENTARY INFORMATION: This is the summary of a Public Notice released May 29, 1998. The text of the public notice in its entirety, including attachments, is available for inspection and copying during normal business hours in the FCC Reference Center (Room 239), 1919 M Street, NW, Washington, DC and also may be purchased from the Commission's copy contractor, International Transcription Services, Inc. (ITS), 1231 20th Street, NW, Washington, DC 20036, (202) 857–3800. In addition, the text of the public notice in its entirety, including attachments, is available on the World Wide Web at http://www.fcc.gov/wtb/auctions/220/220.html#PN.

1. Introduction

1. The Federal Communications Commission (''FCC'' or ''Commission'') will hold an auction for 908 licenses to operate in the 220–222 MHz band. These licenses encompass the United States, the Northern Mariana Islands, Guam, American Samoa, the United States Virgin Islands and Puerto Rico. Specifically, the licenses include: (1) five licenses in each of 172 geographic areas known as Economic Areas (EAs) and three EA-like areas; (2) five licenses in six Economic Area Groupings (EAGs); and (3) three Nationwide licenses which encompass the same territory as all of the EAGs combined (*see* Attachment A for a complete listing of licenses). The licenses include the following channels:

	Channels
(1) EA Block:	
A: Channel Groups 2, 13	10
B: Channel Groups 3, 16	10
C: Channel Groups 5, 18	10
D: Channel Groups 8, 19	10
E: Channel 171–180	10
(2) EAG Block:	
F: Channel Groups 1, 6, 11	15
G: Channel Groups 4, 9, 14	15
H: Channel Groups 7, 12, 17	15
I: Channel Groups 10, 15, 20	15
J: Channel 186–200	15
(3) Nationwide Block:	
K: Channels 51–60	10
L: Channels 81–90	10
M: Channels 141–150	10

Auction Date: The auction will commence on September 15, 1998. The initial schedule for bidding will be announced by public notice at least one week before the start of the auction. Unless otherwise announced, bidding will be conducted on each business day until bidding has stopped on all licenses.

Auction Title: The Phase II 220 MHz Service—Auction No. 18.

Bidding Methodology: Simultaneous multiple round bidding. Bidding will be permitted only from remote locations, either electronically (by computer) or telephonically.

Pre-Auction Deadline

- Auction Seminar ..... August 6, 1998.
- Short Form Application (FCC Form 175) ..... August 17, 1998; 5:30 p.m. ET.

• Upfront Payments (via wire transfer)	August 31, 1998; 6:00 p.m. ET.
• Orders for Remote Bidding Software	September 1, 1998; 5:30 p.m. ET.
• Mock Auction	September 11, 1998 (time TBA).
Telephone Contacts	
• FCC National Call Center	(888) CALL–FCC ((888) 225–5322) (For Bidder Information Packages, General Auction, Information, and Seminar Registration, press option #2 at the prompt). Hours of service: 8 a.m.–5:30 p.m. ET.
• FCC Technical Support Hotline	(202) 414–1250 (V), (202) 414–1255 (TTY). Hours of service: 8 a.m.–6 p.m. ET, Monday–Friday; 9 a.m.–5 p.m. ET, weekend of August 15–16, 1998.

List of Attachments

- Attachment A
  Summary of Phase II 220 Mhz Licenses to be Auctioned
- Attachment B
  List of Cases Pending before the Commission Involving Non-Nationwide Phase I 220 MHz Licensees
- Attachment C
  Guidelines for Completion of FCC Forms 175 and 159, and Exhibits
- Attachment D
  Electronic Filing and Review of FCC Form 175
- Attachment E
  Summary Listing of Documents from the Commission and the Wireless Telecommunications Bureau Addressing Application of the Anti-Collusion Rules
- Attachment F
  List of Commenters

I. Background

2. In March 1997, the Commission restructured the licensing framework that governs the 220 MHz Service. Site-specific licensing, used in the Phase I 220 MHz Service, is to be replaced with a geographic-based system in the Phase II 220 MHz Service which is the subject of the upcoming auction. This geographic-based licensing methodology is similar to that used in other commercial mobile radio services (''CMRS''). The geographic areas for the licenses were created based upon Economic Areas (EAs), developed by the Bureau of Economic Analysis of the U.S. Department of Commerce. The Economic Area Groupings (EAGs), developed by the Commission, include groupings of EAs and encompass the sum total of all EAs. Three Nationwide licenses, including all of the EAGs, are also to be offered in the Phase II 220 MHz Service auction. Service and operational requirements for the Phase II 220 MHz Service are contained in Part 90 of the Commission's Rules, 47 CFR Part 90.

3. On May 21, 1998, the Commission released a *Memorandum Opinion and Order on Reconsideration* in PR Docket No. 89–552, 63 FR 32579; June 12, 1998. Among other things the Commission removed the spectrum efficiency standard that applied to equipment operating in the 220–222 MHz band, eliminated installment payments for small business and very small businesses, and increased bidding credits for such entities.

II. Due Diligence

4. Potential bidders are reminded that there are a number of incumbent Phase I 220 MHz licensees already licensed and operating on frequencies that will be subject to the upcoming auction. Such incumbents must be protected from harmful interference by Phase II 220 MHz licensees in accordance with the Commission's Rules. *See* 47 CFR 90.763. These limitations may restrict the ability of such geographic area licensees to use certain portions of the electromagnetic spectrum or provide service to certain areas in their geographic license areas.

5. In addition, potential bidders seeking licenses for geographic areas that are near the Canadian border should be aware that the use of some or all of the channels they acquire in the auction could be restricted as a result of a future agreement with Canada on the use of 220–222 MHz spectrum in the border area.

6. Potential bidders should also be aware that certain applications (including those for modification), waiver requests, petitions for reconsideration and applications for review are pending before the Commission that relate to particular incumbent non-nationwide 220 MHz licensees. The Commission notes that resolution of these matters could have an impact on the availability of spectrum for EA and EAG licensees. In addition, while the Commission will continue to act on pending applications, requests and petitions, some of these matters may not be resolved by the time of the auction.

III. Potential Bidders Are Solely Responsible for Investigating and Evaluating the Degree to Which Such Pending Matters May Affect Spectrum Availability in Areas Where They Seek EA or EAG Licenses

7. To aid potential bidders, Attachment B to this Public Notice lists pending matters of which the Commission is aware that relate to licenses or applications for the 220 MHz service. The Commission makes no representations or guarantees that the listed matters are the only pending matters that could affect spectrum availability in the 220–222 MHz band. Parties may submit additions or corrections to the list, provided such additions or corrections are filed with the Commission within ten (10) business days from release of this Public Notice. Such submissions should be limited to identifying pleadings or papers previously filed with the Commission. No new pleadings or arguments on the merits will be accepted as explicitly provided by Commission Rules.

8. Corrections and additions must be filed with the Office of the Secretary, Federal Communications Commission, 1919 M Street, NW., Washington, DC 20554. One copy of each submission should also be sent to International Transcription Service, Inc., 1231 20th Street, NW., Washington, DC 20036, while an additional courtesy copy may be sent to Scott A. Mackoul, Policy and Rules Branch, Commercial Wireless Division, Wireless Telecommunications Bureau, Federal Communications Commission, 2100 M Street, NW., 7th Floor, Washington, DC 20554. Parties filing additions or corrections should include the internal reference number (DA 98–1010) on their submissions. Parties also are reminded that some of the proceedings are restricted proceedings governed by the Commission's ex parte rules. Accordingly, any submission filed pursuant to this Public Notice that is directed to the merits or outcome of any restricted proceeding must be served on

all parties to that restricted proceeding. *See* generally 47 CFR 1.1200–1.1216.

9. Additional information regarding matters identified in Attachment B is available to the public. Licensing information is contained in the Commission's licensing database, which is available for inspection in the Wireless Telecommunications Bureau's Pubic Reference Rooms, located at 2025 M Street, NW., Room 5608, Washington, DC 20554, and 1270 Fairfield Road, Gettysburg, PA 17325. In addition, copies of the pleadings are available for public inspection only in the Gettysburg Public Reference Room.

10. In addition, potential bidders may search for information (but not the pleadings) regarding incumbent 220 MHz licensees on the World Wide Web at http://www.fcc.gov/wtb. In particular, information can be accessed by downloading databases by selecting ''WTB Database Files'' (http://www.fcc.gov/wbt/databases.html), or searching on-line by selecting ''Search WTB Databases'' (http://gullfoss.fcc.gov:8080/cgi-bin/ws.exe/beta/genmen/index.hts). Any telephone inquiries regarding these matters should be directed to the Technical Support Hotline at (202) 414–1250 (V) or (202) 414–1255 (TTY).

IV. The Commission Makes no Representations or Guarantees Regarding the Accuracy or Completeness of Information That Has Been Provided by Incumbent Licensees and Incorporated Into the Database. Potential Bidders Are Strongly Encouraged to Physically Inspect any Sites Located in or Near the Geographic Area for Which They Plan to Bid

11. Participation: Those wishing to participate in the auction must:

- Submit a short form application (FCC Form 175) by the above-listed deadline.
- Submit a sufficient upfront payment and an FCC Remittance Advice Form (FCC For 159) by the above-listed deadline.
- Comply with all provisions outlined in this Public Notice.

12. Prohibition of Collusion: To ensure the competitiveness of the auction process, the Commission's Rules prohibit applicants for the same geographic license area from communicating with each other during the auction about bids, bidding strategies, or settlements. This prohibition begins with the filing of short-form applications, and ends on the down payment due date. In the 220 MHz Service auction, for example, the rule would apply to an applicant bidding for an EAG and an applicant bidding for an EA within that EAG. Applicants that apply to bid for ''all markets'' or a nationwide license would be precluded from communicating with all other applicants. An exception is where applicants enter into a bidding agreement before filing their short-form applications, and disclose the existence of the agreement in their short-form applications. *See* 47 CFR 1.2105(c). The Commission notes that Section 1.65 of the Commission's Rules requires an applicant to maintain the accuracy and completeness of information furnished in its pending application and to notify the Commission within 30 days of any substantial change that may be of decisional significance to that application. Thus, Section 1.65 requires an auction applicant to bring to the Commission's attention any communication not permissible under the applicant's certification of compliance with § 1.2105(c). Finally, bidders are reminded that they have a duty to notify the Commission of any violation of the anti-collusion rules upon learning of such violation. Bidders are therefore required to make such notification to the Commission immediately upon discovery.

13. Bidder Information Package: More complete details about this auction are contained in a Bidder Information Package. The Commission will provide one copy to each company free of charge. Additional copies may be ordered at a cost of $16.00 each, including postage, payable by Visa or Master Card, or by check payable to ''Federal Communications Commission'' or ''FCC.'' To place an order, contact the FCC National Call Center at (888) CALL–FCC (888) 225–5322, press option #2 at the prompt). Prospective bidders that have already contacted the FCC at this number expressing an interest in this auction will receive a Bidder Information Package in approximately three weeks, and need not call again unless they wish to order additional copies.

14. Relevant Authority: Prospective bidders must familiarize themselves thoroughly with the Commission's Rules relating to the Phase II 220 MHz Service, contained in Title 47, Part 90 of the Code of Federal Regulations, and those relating to application and auction procedures, contained in Title 47, Part 1, of the Code of Federal Regulations.

15. Prospective bidders must also be thoroughly familiar with the procedures, terms and conditions (collectively, ''Terms'') contained in Amendment of Part 90 of the Commission's Rules to Provide for the Use of the 220–222 MHz Band by the Private Land Mobile Radio Service, PR Docket No. 89–552, RM–8506, GN Docket No. 93–252, PP Docket No. 93–253, *Third Report and Order and Fifth Notice of Proposed Rulemaking,* 12 FCC Rcd 10943 (1997), 62 FR 15978 (April 3, 1997) (''220 MHz Third Report and Order''). The Commission resolved petitions for reconsideration of the *220 MHz Third Report and Order* in Amendment of Part 90 of the Commission's Rules to Provide for the Use of the 220–222 MHz Band by the Private Land Mobile Radio Service, Implementation of Sections 3(n) and 332 of the Communications Act, Regulatory Treatment of Mobile Services, Implementation of Section 309(j) of the Communications Act—Competitive Bidding, PR Docket No. 89–552, GN Docket No. 93–252, PP Docket No. 93–253, FCC 98–93, *Memorandum Opinion and Order on Reconsideration* (rel. May 21, 1998), 63 FR 32580 (June 12, 1998) (''220 MHz MO&O'').

16. For general background on the Phase I 220 MHz Service, *see,* among other materials: Amendment of Part 90 of the Commission's Rules to Provide for the Use of the 220–222 MHz Band by the Private Land Mobile Radio Services, PR Docket No. 89–552, *Report and Order,* 6 FCC Rcd 2356 (1991), 56 FR 19598 (April 29, 1991); Amendment of Part 90 of the Commission's Rules to Provide for the Use of the 220–222 MHz Band by the Private Land Mobile Radio Services, PR Docket No. 80–552, *Memorandum Opinion and Order,* 7 FCC Rcd 4484 (1992), 57 FR 32448 (July 22, 1992).

17. For further information about the 220 MHz Service, *see* Amendment of Part 90 of the Commission's Rules to Provide for the Use of the 220–222 MHz Band by the Private Land Mobile Radio Service, PR Docket No. 89–552, GN Docket No. 93–252, *Second Report and Order,* 11 FCC Rcd 3668 (1996), 61 FR 3841 (Feb. 2, 1996) (''220 MHz Second Report and Order''); Amendment of Part 90 of the Commission's Rules to Provide for the Use of the 220–222 MHz Band by the Private Land Mobile Radio Service, PR Docket No. 89–552, *Fourth Report and Order,* 12 FCC Rcd 13453 (1997), 62 FR 46211 (Sept. 2, 1997).

18. The Terms contained in the Commission's Rules, relevant orders, public notices and bidder information package are not negotiable. Potential bidders are reminded that the *220 MHz MO&O,* released May 21, 1998, which resolved petitions for reconsideration filed in response to the *220 MHz Second Report and Order* and the *220 MHz Third Report and Order* altered some of the decisions and rules adopted in those orders. In addition, the decisions reached in the 220 MHz proceeding are

the subject of a judicial appeal and may be the subject of additional reconsideration or appeal. *See, e.g., PLMRS Narrowband Corp., et al.* v. *Federal Communications Commission*, No. 92–1432, *et al.* (D.C. Cir., filed September 18, 1992).

19. The Commission may amend or supplement the information contained in its public notices or the bidder information package at any time, and will issue public notices to convey any new or supplemental information to bidders. It is the responsibility of all prospective bidders to remain current with all Commission Rules and with all public notices pertaining to this auction. Copies of most Commission documents, including public notices, can be retrieved from the FCC Internet node via anonymous ftp@ftp.fcc.gov or the FCC World Wide Web site at http://www.fcc.gov/wtb/auctions. Additionally, documents may be obtained for a fee by calling the Commission's copy contractor, International Transcription Service, Inc., at (202) 857–3800.

20. *Bidder Alerts:* All applicants must certify on their FCC Form 175 applications under penalty of perjury that they are legally, technically, financially and otherwise qualified to hold a license, and not in default on any payment for Commission licenses (including down payments) or delinquent on any non-tax debt owed to any Federal agency. Prospective bidders are reminded that submission of a false certification to the Commission is a serious matter that may result in severe penalties, including monetary forfeitures, license revocations, exclusion from participation in future auctions, and/or criminal prosecution.

V. The FCC Makes no Representations or Warranties About the Use of This Spectrum for Particular Services. Applicants Should be Aware That an FCC Auction Represents an Opportunity to Become an FCC Licensee in This Service, Subject to Certain Conditions and Regulations. An FCC Auction Does Not Constitute an Endorsement by the FCC of Any Particular Services, Technologies or Products, nor Does an FCC License Constitute a Guarantee of Business Success. Applicants Should Perform Their Individual Due Diligence Before Proceeding as They Would With Any New Business Venture

21. As is the case with many business investment opportunities, some unscrupulous entrepreneurs may attempt to use the Phase II 220 MHz Service auction to deceive and defraud unsuspecting investors. Common warning signals of fraud include the following:

- The first contact is a ''cold call'' from a telemarketer, or is made in response to an inquiry prompted by a radio or television infomercial.
- The offering materials used to invest in the venture appear to be targeted at IRA funds, for example by including all documents and papers needed for the transfer of funds maintained in IRA accounts.
- The amount of the minimum investment is less than $25,000.
- The sales representative makes verbal representations that: (a) the Internal Revenue Service (''IRS''), Federal Trade Commission (''FTC''), Securities and Exchange Commission (''SEC''), FCC, or other government agency has approved the investment; (b) the investment is not subject to state or federal securities laws; or (c) the investment will yield unrealistically high short-term profits. In addition, the offering materials often include copies of actual FCC releases, or quotes from FCC personnel, giving the appearance of FCC knowledge or approval of the solicitation.

22. Information about deceptive telemarketing investment schemes is available from the FTC at (202) 326–2222 and from the SEC at (202) 942–7040. Complaints about specific deceptive telemarketing investment schemes should be directed to the FTC, the SEC, or the National Fraud Information Center at (800) 876–7060. Consumers who have concerns about specific Phase II 220 MHz Service proposals may also call the FCC National Call Center at (888) CALL–FCC ((888) 225–5322).

2. Bidder Eligibility and Small Business Provisions

A. General Eligibility Criteria

23. As described above, this auction offers: (1) Five licenses in each of 172 geographic areas known as Economic Areas (EAs) and three EA-like areas; (2) five licenses in six Economic Area Groupings (EAGs); and (3) three Nationwide licenses which encompass the same territory as all of the EAGs combined (*see* Attachment A for a complete listing of licenses).

(1) Determination of Revenues

24. For purposes of determining which entities qualify as very small businesses or small businesses, the Commission will attribute to the applicant the gross revenues of all of its controlling principals and affiliates. For purposes of this auction, the Commission will not impose specific equity requirements on controlling principals. However, in order to qualify as a very small business or small business, an applicant's qualifying principals must maintain control of the applicant. The term ''control'' includes both *de facto* and *de jure* control of the applicant. Typically, *de jure* control is evidenced by ownership of at least 50.1 percent of an entity's voting stock. *De facto* control is determined on a case-by-case basis. The following are some common indicia of control:

- The entity constitutes or appoints more than 50 percent of the board of directors or management committee;
- The entity has authority to appoint, promote, demote, and fire senior executives that control the day-to-day activities of the licensee; or
- The entity plays an integral role in management decisions.

(2) Application Showing

25. Applicants should note that they will be required to file supporting documentation to establish that they satisfy the eligibility requirements to qualify as a very small business or small business for this auction. *See* 47 CFR 90.1009 and 1.2105.

B. Bidding Credits

26. Qualifying Phase II 220 MHz applicants are eligible for bidding credits. The size of a Phase II 220 MHz bidding credit depends on the annual gross revenues of the bidder and its controlling principals and affiliates, as averaged over the preceding three years:

- A bidder with gross annual revenues of not more than $15 million receives a 25 percent discount on its winning bids for Phase II 220 MHz Service licenses; and,
- A bidder with gross annual revenues of not more than $3 million receives a 35 percent discount on its winning bids for Phase II 220 MHz Service licenses.

27. Bidding credits are not cumulative: applicants that qualify receive either the 25 percent or the 35 percent bidding credit, but not both. The definitions of very small business and small business (including calculation of gross annual revenue) are set forth in 47 CFR 90.1021(b).

28. Phase II 220 MHz Service bidders should note that unjust enrichment provisions apply to winning bidders that use bidding credits and subsequently assign or transfer control of their licenses to an entity not qualifying for the same levels of bidding credits. *See* 47 CFR 90.1017(b). Finally, Phase II 220 MHz Service bidders should also note that there are no

installment payment plans in the 220 MHz Service auction.

3. Pre-Auction Procedures

A Short-form Application (FCC Form 175)—Due August 17, 1998

29. In order to be eligible to bid in this auction, applicants must first submit an FCC Form 175 application. This application must be received at the Commission by 5:30 p.m. ET on August 17, 1998. Late applications will not be accepted.

30. There is no application fee required when filing an FCC Form 175. However, to be eligible to bid, an applicant must submit an upfront payment. *See* 3.C. *infra.*

(1) Filing Options

31. Auction applicants are strongly encouraged to file their applications electronically in order to take full advantage of the greater efficiencies and convenience of electronic filing, bidding and access to bidding data. For example, electronic filing enables the applicant to: (a) receive interactive feedback while completing the application; and (b) receive immediate acknowledgement that the FCC Form 175 has been submitted for filing. In addition, only those applicants that file electronically will have the option of bidding electronically. However, manual filing (via hard copy) is also permitted. Please note that manual filers will not be permitted to bid electronically and must bid telephonically, unless the FCC Form 175 is amended electronically prior to the resubmission date for incomplete or deficient applications. Applicants that file electronically may make amendments to their applications until the filing deadline. The following is a brief description of each filing method.

(a) Electronic Filing

32. Applicants wishing to file electronically may generally do so on a 24-hour basis beginning July 20, 1998. The window for filing the FCC Form 175 electronically will remain open until 5:30 p.m. ET on August 17, 1998. Information about installing and running the FCC Form 175 application software is included in Attachment D to this Public Notice. Technical support is available at (202) 414–1250 (V) or (202) 414–1255 (TTY); the hours of service are 8 a.m.–6 p.m. ET, Monday–Friday, and 9 a.m.–5 p.m. ET, the weekend of August 15–16.

(b) Manual Filing

33. Auction applicants will be permitted to file their FCC Form 175 applications in hard copy. When any manually filed FCC Form 175 and 175–S exceeds five pages in length, the FCC additionally requires that all attachments be submitted on a 3.5-inch diskette, or the entire application be filed in a microfiche version. Manual filers must use the May 1998 version of FCC Form 175 and the October 1995 edition of the 175–S (if applicable). Earlier versions of the FCC Form 175 will not be accepted for filing. Copies of FCC Forms 175 and 175–S can be obtained by calling (202) 418–FORM.

34. Manual applications may be submitted by hand delivery (including private ''overnight'' courier) or by U.S. mail (certified mail with return receipt recommended), addressed to: FCC Form 175 Filing, Auction No. 18, Federal Communications Commission, Wireless Telecommunications Bureau, Auctions & Industry Analysis Division, 1270 Fairfield Road, Gettysburg, PA 17325–7245.

Note: Manual applications delivered to any other location will not be accepted.

(2) Completion of the FCC Form 175

35. Applicants should carefully review 47 CFR 90.1009 and 1.2105, and must complete all items on the FCC Form 175 (and Form 175–S, if applicable). Instructions for completing the FCC Form 175 are in Attachment C of this Public Notice.

36. Failure to sign a manually filed FCC Form 175 (for both electronic and manual filers) will result in dismissal of the application and loss of the ability to participate in the auction. Only original signatures will be accepted for manually filed applications.

(3) Electronic Review of FCC Form 175

37. The FCC Form 175 review software may be used to review and print applicants' FCC Form 175 applications. In other words, applicants that file electronically may review their own completed FCC Form 175. Applicants also have access to view other applicants' completed FCC Form 175s, after the filing deadline has passed and the FCC has issued a public notice explaining the status of the applications. There is a fee of $2.30 per minute for accessing the system. *See* Attachment D for details.

B. Application Processing and Minor Corrections

38. After the deadline for filing the FCC Form 175 applications has passed, the FCC will process all timely applications to determine which are acceptable for filing, and subsequently will issue a public notice identifying: (1) those applications accepted for filing (including FCC account numbers and the licenses for which they applied); (2) those applications rejected; and (3) those applications which have minor defects that may be corrected, and the deadline for filing such corrected applications.

39. As described more fully in the Commission's Rules, after the August 17, 1998, short form filing deadline, applicants may make only minor corrections to the FCC Form 175 applications. Applicants will not be permitted to make major modifications to their applications (*e.g.*, change their license selections, change the certifying official or change control of the applicant). *See* 47 CFR 90.1009 and 1.2105.

C. Upfront Payments—Due August 31, 1998

40. In order to be eligible to bid in the auction, applicants must submit an upfront payment accompanied by an FCC Remittance Advice Form (FCC Form 159). Manual filers must use the July 1997 version of FCC Form 159. Earlier versions of this form will not be accepted. All upfront payments must be received at Mellon Bank in Pittsburgh, PA, by 6:00 p.m. ET on August 31, 1998.

Please note that:

- All payments must be made in U.S. dollars.
- All payments must be made by wire transfer.
- Upfront payments for Auction No. 18 go to a lockbox number different from the ones used in previous FCC auctions, and different from the lockbox number to be used for post-auction payments.
- Failure to deliver the upfront payment by the August 31, 1998 deadline will result in dismissal of the application and disqualification from participation in the auction.

(1) Making Auction Payments by Wire Transfers

41. Wire transfer payments must be received by 6:00 p.m. ET on August 31, 1998. To avoid untimely payments, applicants should discuss arrangements (including bank closing schedules) with their banker several days before they plan to make the wire transfer, and allow sufficient time for the transfer to be initiated and completed before the deadline. Applicants will need the following information:

ABA Routing Number: 043000261.

Receiving Bank: Mellon Pittsburgh.

BNF: FCC/AC 910–0171.

OBI Field: (Skip one space between each information item)

''Auctionpay''.

Taxpayer Identification No.: (Same as FCC Form 159, block 26).

Payment Type Code: (Enter ''A22U'').

FCC Code: 1 (Same as FCC Form 159, block 23A: ''18'').

Payer Name: (Same as FCC Form 159, block 2).

Lockbox No.: 358430.

Note: The BNF and Lockbox number are specific to the upfront payments for this auction; do not use BNF or Lockbox numbers from previous auctions.

42. Applicants must fax a completed FCC Form 159 to Mellon Bank at (412) 236–5702 at least one hour before placing the order for the wire transfer (but on the same business day). On the cover sheet of the fax, write ''Wire Transfer—Auction Payment for Auction Event No. 18.'' Bidders may confirm receipt of their upfront payment at Mellon Bank by contacting their sending financial institution.

(2) FCC Form 159

43. Each upfront payment must be accompanied by a completed FCC Remittance Advice Form (FCC Form 159). Proper completion of FCC Form 159 is critical to ensuring correct credit of upfront payments. Detailed instructions for completion of FCC Form 159 are included in Attachment C to this Public Notice and will also be included in the Bidder Information Package.

(3) Amount of Upfront Payment

44. In the *220 MHz Third Report and Order*, the Commission delegated to the Bureau the authority and discretion to determine an appropriate upfront payment for each license being auctioned. 62 FR at 15981. In the *220 MHz Public Notice*, (63 FR 2976, January 20, 1998) the Commission proposed for the Phase II 220 MHz Service auction an upfront payment of one cent per MHz/POP with no amount less than $2,500. 63 FR at 2978.

45. For the Phase II 220 MHz Service auction the Commission will adopt its proposal of one cent per MHz/POP with no amount less than $2,500. This upfront payment amount, based upon the data in Attachment A, will be the amount required to bid on a particular license(s) in Auction No. 18. The Commission believes that this is the appropriate upfront payment formula, considering such factors as the population in each geographic license area, and the value of spectrum similar to that being offered in the 220 MHz Service. The Commission notes that this upfront payment amount is lower than that used in many previous auctions—*e.g.*, the PCS spectrum auctions—but believes a reduction is appropriate, for the reasons expressed by a commenter, namely, the size of the likely participants in the 220 MHz Service auction.

46. The upfront payments are not attributed to specific licenses, but instead will be translated to bidding units to define the bidder's maximum bidding eligibility. For Auction No. 18, the total number of bidding units assigned to each bidder is equal to the amount of the upfront payment, *e.g.*, a $25,000 upfront payment provides the bidder with 25,000 bidding units. The total upfront payment defines the maximum amount of bidding units on which the applicant will be permitted to bid (including standing high bids) in any single round of bidding. Thus, an applicant does not have to make an upfront payment to cover all licenses for which the applicant has applied, but rather to cover the maximum number of bidding units associated with licenses the bidder wishes to place bids on and hold high bids on at any given time. In order to be able to place a bid on a license, in addition to having specified that license on FCC Form 175, a bidder must have an eligibility level that meets or exceeds the number of bidding units assigned to that license. At a minimum, an applicant's total upfront payment must be enough to establish eligibility to bid on at least one of the licenses applied for on FCC Form 175, or else the applicant will not be eligible to participate in the auction.

47. In calculating the upfront payment amount, an applicant should determine the *maximum* number of bidding units it may wish to bid on in any single round, and submit an upfront payment covering that number of bidding units.

Note: An applicant may, on its FCC Form 175, apply for every license being offered, but its actual bidding in any round will be limited by the bidding units reflected in its upfront payment.

(4) Applicant's Wire Transfer Information for Purposes of Refunds

48. Because experience with prior auctions has shown that in most cases wire transfers provide quicker and more efficient refunds than paper checks, the Commission will use wire transfers for all Auction No. 18 refunds. To avoid delays in processing refunds, applicants should include wire transfer instructions with any refund request they file; they may also provide this information in advance by faxing it to the FCC Billings and Collections Branch, ATTN: Linwood Jenkins or Geoffrey Idika, at (202) 418–2843. Please include the following information:

Name of Bank
ABA Number
Account Number to Credit
Correspondent Bank (if applicable)
ABA Number
Account Number
Contact and Phone Number

(Applicants should also note that implementation of the Debt Collection Improvement Act of 1996 requires the FCC to obtain a Taxpayer Identification Number (TIN) before it can disburse refunds.) Eligibility for refunds is discussed in 5.D., *infra*.

D. Auction Registration

49. Approximately ten days before the auction, the FCC will issue a public notice announcing all qualified bidders for the auction. Qualified bidders are those applicants whose FCC Form 175 applications have been accepted for filing and that have timely submitted upfront payments sufficient to make them eligible to bid on at least one of the licenses for which they applied.

50. All qualified bidders are automatically registered for the auction. Registration materials will be distributed prior to the auction by two separate mailings, each containing part of the confidential identification codes required to place bids. These mailings will be sent only to the contact person at the applicant address listed in the FCC Form 175.

51. Applicants that do not receive both registration mailings will not be able to submit bids. Therefore, any qualified applicant that has not received both mailings by noon on Thursday, September 10, 1998 should contact the FCC National Call Center at (888) CALL–FCC ((888) 225–5322, press option #2 at the prompt). Receipt of both registration mailings is critical to participating in the auction and each applicant is responsible for ensuring it has received all of the registration material.

Qualified bidders should note that lost login codes, passwords or bidder identification numbers can be replaced only by appearing *in person* at the FCC Auction Headquarters located at 2 Massachusetts Avenue, NE., Washington, DC 20002. Only an authorized representative or certifying official, as designated on an applicant's FCC Form 175, may appear in person with two forms of identification (one of which must be a photo identification) in order to receive replacement codes.

E. Remote Electronic Bidding Software

52. Qualified bidders that file or amend the FCC Form 175 electronically are allowed to bid electronically, but must purchase remote electronic bidding software for $175.00 by September 1, 1998. (Auction software is tailored to a specific auction, so software from prior auctions will not

work for Auction No. 18.) A software order form is included in the Bidder Information Package.

F. Auction Seminar

53. On August 6, 1998, the FCC will sponsor a seminar for the Phase II 220 MHz Service auction in Washington, DC. The seminar will provide attendees with information about pre-auction procedures, conduct of the auction, FCC remote bidding software, and the 220 MHz Service and auction rules.

54. To register, complete the registration form to be included in the upcoming Phase II 220 MHz Service auction Bidder Information Package. The registration form will include details about the time and location of the seminar. Registrations are accepted on a first-come, first-served basis.

G. Mock Auction

55. All applicants whose FCC Form 175 and 175–S have been accepted for filing will be eligible to participate in a mock auction beginning September 11, 1998. The mock auction will enable applicants to become familiar with the electronic software prior to the auction. Free demonstration software will be available for use in the mock auction. Due to different bidding procedures in the Phase II 220 MHz Service auction from previous Commission auctions, participation by all bidders is strongly recommended. Details will be announced by public notice.

4. Auction Event

56. The first round of the auction will begin on September 15, 1998. The initial round schedule will be announced in a Public Notice listing the qualified bidders, to be released approximately 10 days before the start of the auction.

A. Auction Structure

(1) Simultaneous Multiple Round Auction

57. The Commission adopts its proposal, in the *220 MHz Public Notice,* to award the 908 licenses in the Phase II 220 MHz Service in a single, simultaneous multiple round auction. 63 FR at 2977. Unless otherwise announced, bids will be accepted on all licenses in each round of the auction. This approach, the Commission believes, is most administratively efficient. In addition, the Commission believes that the Phase II 220 MHz licenses are interdependent and bidders may prefer to substitute different types of licenses during the same auction.

(2) Maximum Eligibility and Activity Rules

58. In the *220 MHz Public Notice,* the Commission proposed that the amount of the upfront payment submitted by a bidder would determine the initial maximum eligibility (as measured in bidding units) for each bidder. For the Phase II 220 MHz Service auction the Commission will adopt this proposal. The amount of the upfront payment submitted by a bidder determines the initial maximum eligibility (in bidding units) for each bidder. Upfront payments are not attributed to specific licenses, but instead will be translated into bidding units to define a bidder's initial maximum eligibility. The total upfront payment defines the maximum number of bidding units on which the applicant will initially be permitted to bid. The Commission notes that there is no provision for increasing a bidder's maximum eligibility during the course of an auction.

59. In order to ensure that the auction closes within a reasonable period of time, an activity rule requires bidders to bid actively throughout the auction, rather than wait until the end before participating. Bidders are required to be active on a specific percentage of their maximum eligibility during each round of the auction.

60. A bidder is considered active on a license in the current round if it is either the high bidder at the end of the previous bidding round and does not withdraw the high bid in the current round, or if it submits an acceptable bid in the current round (*see* ''Minimum Accepted Bids'' in Part 4.B.(3), *infra*). A bidder's activity level in a round is the sum of the bidding units associated with licenses on which the bidder is active. The minimum required activity level is expressed as a percentage of the bidder's maximum bidding eligibility, and increases as the auction progresses. Because these procedures have proven successful in maintaining the pace of previous auctions as set forth under ''Auction Stages'' in Part 4.A.(4) and ''Stage Transitions'' in Part 4.A.(5), *infra,* the Commission adopts them for the 220 MHz Service auction.

(3) Activity Rule Waivers and Reducing Eligibility

61. In the *220 MHz Public Notice,* the Commission proposed that each bidder in the auction would be provided five activity rule waivers that may be used in any round during the course of the auction.

62. Based upon the Commission's experience in previous auctions, the Commission concludes that each bidder will be provided five activity rule waivers that may be used in any round during the course of the auction. Use of an activity rule waiver preserves the bidder's current bidding eligibility despite the bidder's activity in the current round being below the required minimum level. An activity rule waiver applies to an entire round of bidding and not to a particular license.

63. The FCC auction system assumes that bidders with insufficient activity would prefer to use an activity rule waiver (if available) rather than lose bidding eligibility. Therefore, the system will automatically apply a waiver (known as an ''automatic waiver'') at the end of any round where a bidder's activity level is below the minimum required unless: (1) there are no activity rule waivers available; or (2) the bidder overrides the automatic application of a waiver by reducing eligibility, thereby meeting the minimum requirements.

64. A bidder with insufficient activity that wants to reduce its bidding eligibility rather than use an activity rule waiver must affirmatively override the automatic waiver mechanism during the round by using the reduce eligibility function in the software. In this case, the bidder's eligibility is permanently reduced to bring the bidder into compliance with the activity rules as described in ''Auction States,'' Part 4.A.(4). Once eligibility has been reduced, a bidder will not be permitted to regain its lost bidding eligibility.

65. Finally, a bidder may proactively use an activity rule waiver as a means to keep the auction open without placing a bid. If a bidder submits a proactive waiver (using the proactive waiver function in the bidding software) during a round in which no bids are submitted, the auction will remain open and the bidder's eligibility will be preserved. An automatic waiver invoked in a round in which there are no new valid bids or withdrawals will not keep the auction open.

(4) Auction Stages

66. In the *220 MHz Public Notice,* the Commission proposed to conduct the auction in stages and employ an activity rule. The Commission concludes that the auction will be composed of three stages, which are each defined by an increasing activity rule. Below are the proposed activity levels for each stage of the auction. The FCC reserves the discretion to alter the activity percentages before and/or during the auction.

67. *Stage One:* In each round of the first stage of the auction, a bidder desiring to maintain its current

eligibility is required to be active on licenses encompassing at least 80 percent of its current bidding eligibility. Failure to maintain the requisite activity level will result in a reduction in the bidder's bidding eligibility in the next round of bidding (unless an activity rule waiver is used). During Stage One, reduced eligibility for the next round will be calculated by multiplying the current round activity by five-fourths (5/4).

68. *Stage Two:* In each round of the second stage, a bidder desiring to maintain its current eligibility is required to be active on 90 percent of its current bidding eligibility. During Stage Two, reduced eligibility for the next round will be calculated by multiplying the current round activity by ten-ninths (10/9).

69. *Stage Three:* In each round of the third stage, a bidder desiring to maintain its current eligibility is required to be active on 98 percent of its current bidding eligibility. In this final stage, reduced eligibility for the next round will be calculated by multiplying the current round activity by fifty-fortyninths (50/49).

Caution: Since activity requirements increase in each auction stage, bidders must carefully check their current activity during the bidding round of the first round following a stage transition. This is especially critical for bidders that have standing high bids and do not plan to submit new bids. In past auctions, some bidders have inadvertently lost bidding eligibility or used an activity rule waiver because they did not reverify their activity status at stage transitions. Bidders may check their activity against the required minimum activity level by using the bidding software's bidding module.

70. Because the foregoing procedures have proven successful in maintaining proper tempo in previous auctions, the Commission will adopt them for the Phase II 220 MHz Service auction.

(5) Stage Transitions

71. In the *220 MHz Public Notice*, the Commission proposed that the auction would advance to the next stage (*i.e.*, from Stage One to Stage Two, and from Stage Two to Stage Three) when, in each of three consecutive rounds of bidding, the high bid has increased on 10 percent or less of the licenses being auctioned (as measured in bidding units).

72. The Commission concludes that the auction will start in Stage One. Under the FCC's general guidelines it will advance to the next stage (*i.e.*, from Stage One to Stage Two, and from Stage Two to Stage Three) when, in each of three consecutive rounds of bidding, the high bid has increased on 10 percent or less of the licenses being auctioned (as measured in bidding units). However, the Bureau will retain the discretion to regulate the pace of the auction by announcement. This determination will be based on a variety of measures of bidder activity, including, but not limited to, the auction activity level, the percentages of licenses (as measured in bidding units) on which there are new bids, the number of new bids, and the percentage increase in revenue. The Commission believes that these stage transition rules, having proven successful in prior auctions, are appropriate for use in the Phase II 220 MHz Service auction.

(6) Auction Stopping Rules

73. In the *220 MHz Public Notice*, the Commission proposed to retain the discretion to keep the auction open, even if no new acceptable bids or proactive waivers are submitted and no previous high bids are withdrawn. In addition, the Commission proposed that the Bureau reserve the right to declare that the auction will end after a specified number of additional rounds (''special stopping rule'').

74. Barring extraordinary circumstances, bidding will remain open on all licenses until bidding stops on every license. Thus, the auction will close for all licenses when one round passes during which no bidder submits a new acceptable bid on any license, applies a proactive waiver, or withdrawns a previous high bid.

75. The Bureau retains the discretion, however, to keep an auction open even if no new acceptable bids or proactive waivers are submitted, and no previous high bids are withdrawn. In this event, the effect will be the same as if a bidder has submitted a proactive waiver. Thus, the activity rule will apply as usual, and a bidder with insufficient activity will either lose bidding eligibility or use an activity rule waiver (if it has any left).

76. Further, in its discretion, the Bureau reserves the right to declare that the auction will end after a specified number of additional rounds (''special stopping rule''). If the FCC invokes this special stopping, rule it will accept bids in the final round(s) only for licenses on which the high bid increased in at least one of the preceding specified number of rounds. The FCC intends to exercise this option only in extreme circumstances, such as where the auction is proceeding very slowly, where there is minimal overall bidding activity, or where it appears likely that the auction will not close within a reasonable period of time. Before exercising this option, the FCC is likely to attempt to increase the pace of the auction by, for example, moving the auction into the next stage (where bidders would be required to maintain a higher level of bidding activity), increasing the number of bidding rounds per day, and/or increasing the amount of the minimum bid increments for the limited number of licenses where there is still a high level of bidding activity.

77. Adoption of these rules, the Commission believes, is most appropriate for the Phase II 220 MHz auction because our experience in prior auctions demonstrates that the simultaneous stopping rule balanced the interests of administrative efficiency and maximum bidder participation. The substitutability between and among licenses in different geographic areas and the importance of preserving the ability of bidders to pursue backup strategies support of use of a simultaneous stopping rule.

(7) Auction Delay, Suspension, or Cancellation

78. In the *220 MHz Public Notice*, the Commission proposed that, by police notice or by announcement during the auction, the Bureau may delay, suspend, or cancel the auction in the event of natural disaster, technical obstacle, evidence of an auction security breach, unlawful bidding activity, administrative or weather necessity, or for any other reason that affects the fair and competitive conduct of competitive bidding.

79. Because this approach has proven effective in resolving exigent circumstances in previous auctions, the Commission will adopt our proposed auction cancellation rules. By public notice or by announcement during the action, the Burean may delay, suspend or cancel the auction in the event of natural disaster, technical, obstacle, evidence of an auction security breach, unlawful bidding activity, administrative or weather necessity, or for any other reason that affects the fair and competitive conduct of competitive bidding. In such cases, the Bureau, in its sole discretion, may elect to: resume the auction starting from the beginning of the current round; resume the auction starting from some previous round; or cancel the auction in its entirety. Network interruption may cause the Bureau to delay or suspend the auction. The Commission emphasizes that exercise of this authority is solely within the discretion of the Bureau, and its use is not intended to be a substitute for situations in which bidders may wish to apply their activity rule waivers.

B. Bidding Procedures

(1) Round Structure

80. The initial bidding schedule will be announced by public notice at least one week before the start of the auction, and will be included in the registration mailings. The round structure for each bidding round contains a single bidding round followed by the release of the round results.

81. The FCC has discretion to change the bidding schedule in order to foster an auction pace that reasonably balances speed with the bidders' need to study round results and adjust their bidding strategies. The FCC may increase or decrease the amount of time for the bidding rounds and review periods, or the number of rounds per day, depending upon the bidding activity level and other factors.

(2) Reserve Price or Minimum Opening Bid

82. The Balanced Budget Act of 1997 calls upon the Commission to prescribe methods by which a reasonable reserve price will be required or a minimum opening bid established with FCC licenses are subject to auction (*i.e.*, because they are mutually exclusive), unless the Commission determines that a reserve price or minimum opening bid is not in the public interest. Consistent with this mandate, the Commission has directed the Wireless Telecommunications Bureau (''Bureau'') to seek comment on the use of a minimum opening bid and/or reserve price prior to the start of each auction. The Bureau was directed to seek comment on the methodology to be employed in establishing each of these mechanisms. Among other factors, the Bureau should consider the amount of spectrum being auctioned, levels of incumbency, the availability of technology to provide service, the size of the geographic service areas, the extent of inference with other spectrum bands, and any other relevant factors that could have an impact on valuation of the spectrum being auctioned. The Commission concluded that the Bureau should have the discretion to employ either or both of these mechanisms for future auctions.

83. In the *220 MHz Public Notice*, the Bureau proposed to establish minimum opening bids for the 220 MHz Service auction and to retain discretion to lower the minimum opening bids. Specifically, the Bureau proposed the following formula for calculating minimum opening bids for Auction 18:

1. EA Licenses
   $0.0175 MHz * POP
2. EAG Licenses
   $0.015 MHz * POP
3. Nationwide Licenses
   $0.02 MHz * POP

with a minimum of no less than $2,500 per license. In the alternative, the Bureau sought comment on whether, consistent with the Balanced Budget Act, the public interest would be served by having no minimum opening bid or reserve price.

84. The Commission adopts minimum opening bids for each of the licenses in the Phase II 220 MHz Service auction that are reducible at the discretion of the Bureau. The levels will be set as follows:

1. EA Licenses
   $0.015 MHz * POP
2. EAG License
   $0.0125 MHz * POP
3. Nationwide Licenses
   $0.0175 MHz * POP

with a minimum of no less than $2,500 per license.

85. As was the case in prescribing minimum opening bids in the auction of the upper channels in the 800 MHz SMR service and the LMDS auctions, Congress has enacted a presumption that unless the Commission determines otherwise, minimum opening bids or reserve prices are in the public interest. The Bureau is unpersuaded by commenters' assertions that minimum opening bids for the Phase II 220 MHz Service auction are not in the public interest. Setting the level of the minimum opening bids is a difficult task, especially in the case of the Phase II 220 MHz Service where the channels are narrow, encumbered and the potential uses of the band remain to be explored. To address this concern, the minimum opening bids adopted here are reducible. This will allow the Bureau flexibility to adjust the minimum opening bids if circumstances warrant. The Commission emphasizes, however, that such discretion will be exercised sparingly and early in the auction, *ie.*, before bidders lose all waivers and begin the lose eligibility. During the course of the auction, the Bureau will not entertain any bidder requests to reduce the minimum opening bids on specific licenses.

86. The Commission concludes that the revised formula presented here best meets the objectives of our auction authority in establishing a reasonable minimum opening bid. The Commission has noted in the past that the reserve price and minimum opening bid provision is not a requirement to maximize auction revenue but rather a protection against assigning licenses at unacceptably low prices and that the Commission must balance the revenue raising objective against its other public interest objectives in setting the minimum bid level. In doing so, the Commission agree with commenters that the 220 MHz channels are narrow and the likely auction participants will be small business entrepreneurs. In addition, the Commission recognizes that the EAG licenses are more substantially encumbered than are the other license types. The Commission has adjusted its minimum opening bids accordingly. In sum, the Commission's experience in using minimum opening bids in the 800 MHz SMR auction and the LMDS auction supports the fact that minimum opening bids promote efficient allocation of licenses and speed the course of the auction while ensuring that valuable assets are not sold for nominal prices.

(3) Minimum Accepted Bids

87. In the *220 MHz Public Notice*, the Commission proposed to use an exponential smoothing methodology to calculate minimum bid increments. The Commission further proposed to retain the discretion to change the minimum bid increment if circumstances so dictate.

88. Because these techniques have proven effective in prior auctions, the Commission adopts its proposal for the 220 MHz Service auction. Once there is a standing high bid on a license, a bid increment will be applied to that license to establish a minimum acceptable bid for the following round. For the Phase II 220 MHz Service auction, the Commission will utilize, as described immediately below, an exponential smoothing methodology to calculate minimum bid increments. The Bureau retains the discretion to change the minimum bid increment if it determines that circumstances so dictate. The exponential smoothing methodology has been used in previous auctions, including the WCS auction and the 800 MHz SMR auction.

Exponential Smoothing

89. The exponential smoothing formula calculates the bid increment for each license based on a weighted average of the activity received on each license in the current and all previous rounds. This methodology will tailor the bid increment for each license based based on activity, rather than setting a global increment for all licenses. For every license that receives a bid, the bid increment for the next round for that license will be established using the exponential smoothing formula.

90. Using exponential smooting, the calculation of the percentage bid increment for each license will be based

on an activity index, which is calculated as the weighted average of the current activity and the activity index from the previous round. The activity index at the start of the auction (round 0) will be set at 0. The current activity index is equal to a weighing factor times the number of new bids received on the license in the current bidding round plus one minus the weighting factor times the activity index from the previous round. The activity index is then used to calculate a percentage increment by multiplying a minimum percentage increment by one plus the activity index with that result being subject to a maximum percentage increment. The Commission will initially set the weighting factor at 0.5, the minimum percentage increment at 0.05, and the maximum percentage increment at 0.15.

Equations

$A_i=(C*B_i)+((1-C)*A_{i-1})$
I_i=smaller of $(1+A_i)*N)$ and M

Where:

A_i=activity index for the current round (round i)
C=activity weight factor
B_i=number of bids in the current round (round i)
A_{i-1}=activity index from previous round (round $i-1$), A_0 is 0
I_i=percentage bid increment for the current round (round i)
N=minimum percentage increment
M=maximum percentage increment

Under the exponential smoothing methodology, once a bid has been received on a license, the minimum acceptable bid for that license in the following round will be the new high bid plus the dollar amount associated with the percentage increment (variable I_i from above times the high bid). This result will be rounded to the nearest thousand if it is over ten thousand or to the nearest hundred it it is under ten thousand.

Examples

License 1
C=0.5, N=0.05, M=0.15
Round 1 (2 new bids, high bid = $1,000,000)

1. Calculation of percentage increment using exponential smoothing:

$A_1=(0.5*2) + (0.5*0) = 1$
$I_1 = (1+1) *0.05=0.1$

2. Minimum bid increment using the percentage increment (I_1 from above)

0.1*$1,000,000=$100,000

3. Minimum acceptable bid for round 2=1,100,000

Round 2 (3 new bids, high bid=2,000,000)

1. Calculation of percentage increment using exponential smooting:

$A_2=(0.5 * 3) + (0.5 * 1) = 2$
$I_2=(1 +2) * 0.05 = 0.15$

2. Minimum bid increment using the percentage increment (I_2 from above)

0.15 * $2,000,000 = $300,000

3. Minimum acceptable bid for round 3 = 2,300,000

Round 3 (1 new bid, high bid = 2,300,000)

1. Calculation of percentage increment using exponential smoothing:

$A_3 = (0.5 * 1) + (0.5 * 2) = 1.5$
$I_3 = (1 + 1.5) * 0.05 + 0.125$

2. Minimum bid increment using the percentage increment (I_3 from above)

0.125 * $2,300,000 = $287,500

3. Minimum acceptable bid for round 4 = 2,588,000

(4) High Bids

91. Each bid will be date- and time-stamped when it is entered into the computer system. In the event of tie bids, the Commission will identify the high bidder on the basis of the order in which bids are received by the Commission, starting with the earliest bid. The bidding software allows bidders to make multiple submissions in a round. As each bid is individually date and time-stamped according to when it was submitted, bids submitted by a bidder earlier in a round will have an earlier date- and time-stamped than bids submitted later in a round.

(5) Bidding

92. During a bidding round, a bidder may submit bids for as many licenses for which it is eligible, as well as withdraw high bids from previous bidding rounds, remove bids placed in the same bidding round, or permanently reduce eligibility. Bidders also have the option of making multiple submissions and withdrawals in each bidding round, and will not have a separate period to withdraw bids. If a bidder submits multiple bids for a single license in the same round, the system takes the last bid entered as that bidder's bid for the round, and the date- and time-stamped of that bid reflect the latest time the bid was submitted.

93. Please note that all bidding will take place either through the automated bidding software or by telephonic bidding (Telephonic bid assistants are required to use a script when handling bids placed by telephone. Telephonic bidders are therefore reminded to allow sufficient time to bid, by placing their calls well in advance of the close of a round, because four to five minutes are necessary to complete a bid submission.) There will be no on-site bidding during Auction No. 18.

94. A bidder's maximum eligibility in the first round of the auction is determined by two factors: (1) the licenses applied for on FCC Form 175; and (2) the upfront payment amount deposited. The bid submission screens will be tailored for each bidder to include only those licenses for which the bidder applied on its FCC Form 175. A bidder also has the option to further tailor its bid submission screens to call up specified groups of licenses.

95. The bidding software requires each bidder to log in to the FCC auction system during the bidding round using the FCC account number, bidder identification number, and the confidential security codes provided in the registration materials. Bidders are strongly encouraged to download and print bid confirmations *after* they submit their bids.

96. The bid entry screen of the Automated Auction System software for the Phase II 220 MHz Service auction allows bidders to place multiple increment bids which will let bidders increase high bids from one to nine bid increments. A single bid increment is defined as the difference between the standing high bid and the minimum acceptable bid for a license.

97. To place a bid on a license, the bidder must enter a whole number between 1 and 9 in the bid increment multiplier (Bid Mult) field. This value will determine the amount of the bid (Amount Bid) by multiplying the bid increment multiplier by the bid increment and adding the result to the high bid amount according to the following formula:

Amount Bid = High Bid + (Bid Mult * Bid Increment)

Thus, bidders may place a bid that exceeds the standing high bid by between one and nine times the bid increment. For example, to bid the minimum acceptable bid, which is equal to one bid increment, a bidder will enter ''16'' in the bid increment multiplier column and press submit.

98. For any license on which the FCC is designated as the high bidder (*i.e.*, a license that has not yet received a bid in the auction or where the high bid was withdrawn and a new bid has not yet been placed), bidders will be limited to bidding only the minimum acceptable bid. In both of these cases no increment exists for the licenses, and bidders should enter ''1'' in the Bid Mult field. Note that any whole number between 1 and 9 entered in the multiplier column will result in a bid value at the minimum acceptable bid amount.

Finally, bidders are cautioned in entering numbers in the Bid Mult field because, as explained in the following section, a high bidder that withdraws its standing high bid from a previous round, even if mistakenly or erroneously made, is subject to bid withdrawal payments.

(6) Bid Removal and Bid Withdrawal

99. In the *20 MHz Public Notice*, the Commission proposed bid removal and bid withdrawal rules. With respect to bid withdrawals, the Commission proposed limiting each bidder to withdrawals in no more than two rounds during the course of the auction.

a. Procedures

100. Before the close of a bidding round, a bidder has the option of removing any bids placed in that round. By using the remove bid function in the software, a bidder may effectively ''unsubmit'' any bid placed within that round. A bidder removing a bid placed in the same round is not subject to withdrawal payments. Removing a bid will affect a bidder's activity for the round in which it is removed. This procedure will enhance bidder flexibility and, may serve to expedite the course of the action. Therefore, the Commission will adopt these procedures for the 220 MHz Service auction.

101. Once a round closes, a bidder may no longer remove a bid. However, in the next round, a bidder may withdraw standing high bids from previous rounds using the withdraw bid function (assuming that the bidder has not exhausted its withdrawal allowance). A high bidder that withdraw its standing high bid from a previous round is subject to the bid withdrawal payments specified in 47 CFR 90.1007, 1.2104(g), and 1.2109. The procedure for withdrawing a bid and receiving a withdrawal confirmation is essentially the same as the bidding procedure described in ''High Bids,'' Part 4.B.2.c.(4).

102. In previous auctions, the Commission has detected bidder conduct that, arguably, may have constituted strategic bidding through the use of bid withdrawals. While the Commission continues to recognize the important role that bid withdrawals play in an auction, *i.e.* reducing risk associated with efforts to secure various geographic area licenses in combination, the Commission concludes that, for the 220 MHz Service auction, adoption of a limit on their use to two rounds is the most appropriate outcome. By doing so the Commission believes it strikes a reasonable compromise that will allow bidders to use withdrawals. The Commission's decision on this issue is based upon its experience in prior auctions, particularly the PCS D, E and F block auction, 800 MHz SMR auction, and LMDS auction, and is in no way a reflection of its view regarding the likelihood of any speculation or ''gaming'' in the 220 MHz Service auction.

103. The Bureau will therefore limit the number of rounds in which bidders may place withdrawals to two rounds. These rounds will be at the bidder's discretion and there will be no limit on the number of bids that may be withdrawn in either of these rounds. Withdrawals will still be subject to the bid withdrawal payments specified in 47 CFR 90.1007, 1.2104(g), and 1.2109. Bidders should note that abuse of the Commission's bid withdrawal procedures could result in the denial of the ability to bid on a market.

104. If a high bid is withdrawn, the license will be offered in the next round at the second highest bid price, which may be less than, or equal to, in the case of tie bids, the amount of the withdrawn bid, without any bid increment. The FCC will serve as a ''place holder'' on the license until a new acceptable bid is submitted on that license.

b. Calculation

105. Generally, a bidder that withdraws a standing high bid during the course of an auction will be subject to a payment equal to the lower of: (1) the difference between the net withdrawn bid and the subsequent net winning bid; or (2) the difference between the gross withdrawn bid and the subsequent gross winning bid for that license. *See* 47 CFR 90.1007, 1.2104(g), and 1.2109. No withdrawal payment will be assessed if the subsequent winning bid exceeds the withdrawn bid.

(7) Round Results

106. The bids placed during a round are not published until the conclusion of that bidding period. After a round closes, the FCC will compile reports of all bids placed, bids withdrawn, current high bids, a new minimum accepted bids, and bidder eligibility status (bidding eligibility and activity rule waivers), and post the reports for public access.

107. Reports reflecting bidders' identities and bidder identification numbers for Auction No. 18 will be available before and during the auction. Thus, bidders will know in advance of this auction the identities of the bidders against which they are bidding.

(8) Auction Announcement

108. The FCC will use auction announcements to announce items such as schedule changes and stage transitions. All FCC auction announcements will be available on the FCC remote electronic bidding system, as well as the Internet and the FCC Bulletin Board System.

(9) Other Matters

109. As noted in 3.B., after the short-form filing deadline, applicants may make only minor changes to their FCC Form 175 applications. For example, permissible minor changes include deletion and addition of authorized bidders (to a maximum of three) and revision of exhibits. Filers should make these changes on-line, and submit a letter to Amy Zoslov, Chief, Auctions and Industry Analysis Division, Wireless Telecommunications Bureau, Federal Communications Commission, 2025 M Street, N.W., Room 5202, Washington, D.C. 20554 (and mail a separate copy to Frank Stilwell, Auctions and Industry Analysis Division), briefly summarizing the changes. Questions about other changes should be directed to Frank Stilwell of the FCC Auctions and Industry Analysis Division at (202) 418–0660.

5. Post-Auction Procedures

A. Down Payments and Withdrawn Bid Payments

110. After bidding has ended, the Commission will issue a public notice declaring the auction closed, identifying the winning bids and bidders for each license, and listing withdrawn bid payments due.

111. Within ten business days after release of the auction closing notice, each winning bidder must submit sufficient funds (in addition to its upfront payment) to bring its total amount of money on deposit with the Government to 20 percent of its net winning bids (actual bids less any applicable bidding credits). *See* 47 CFR 90.1011(b). In addition, by the same deadline all bidders must pay any withdrawn bid amounts due under 47 CFR 1.2104(g), as discussed in ''Bid Removal and Bid Withdrawal,'' Part 4.B.2.c(6). (Upfront payments are applied first to satisfy any withdrawn bid liability, before being applied toward down payments.)

B. Long-Form Application

112. Within ten business days after release of the auction closing, notice winning bidders must submit a properly completed long-form application and required exhibits for each Phase II 220

MHz Service license won through the auction. Winning bidders that are small businesses or very small businesses must include an exhibit demonstrating their eligibility for bidding credits. *See* 47 CFR 90.1013. Further filing instructions will be provided to auction winners at the close of the auction.

C. Default and Disqualification

113. Any high bidder that defaults or is disqualified after the close of the auction (*i.e.*, fails to remit the required down payment within the prescribed period of time, fails to submit a timely long-form application, fails to make full payment, or is otherwise disqualified) will be subject to the payments described in 47 CFR 1.2104(g)(2). In such event the Commission may re-auction the license or offer it to the next highest bidders (in descending order) at their final bids. *See* 47 CFR 1.2109(b) and (c). In addition, if a default or disqualification involves gross misconduct, misrepresentation, or bad faith by an applicant, the Commission may declare the applicant and its principals ineligible to bid in future auctions, and may take any other action that it deems necessary, including institution of proceedings to revoke any existing licenses held by the applicant. *See* 47 CFR 1.2109(d).

D. Refund of Remaining Upfront Payment Balance

114. All applicants that submitted upfront payments but were not winning bidders for any Phase II 220 MHz Service license may be entitled to a refund of their remaining upfront payment balance after the conclusion of the auction. No refund will be made unless there are excess funds on deposit from that applicant after any applicable bid withdrawal payments have been paid.

115. Bidders that drop out of the auction completely may be eligible for a refund of their upfront payments before the close of the auction. However, bidders that reduce their eligibility and remain in the auction are not eligible for partial refunds of upfront payments until the close of the auction. Qualified bidders that have exhausted all of their activity rule waivers, have no remaining bidding eligibility, and have not withdrawn a high bid during the auction must submit a written refund request which includes wire transfer instructions, a Taxpayer Identification Number (''TIN''), and a copy of their bidding eligibility screen print, to: Federal Communications Commission, Billings and Collections Branch, Attn: Regina Dorsey or Linwood Jenkins, 1919 M Street, NW. Room 452, Washington, DC 20554.

116. Bidders can also fax their request to the Billings and Collections Branch at (202) 418–2843. Once the request has been approved, a refund will be sent to the address provided on the FCC Form 159.

Note: Refund processing generally takes up to two weeks to complete. Bidders with questions about refunds should contact Linwood Jenkins or Geoffrey Idika at (202) 418–1995.

Federal Communications Commission.

Magalie Roman Salas,

Secretary.

Attachment A—Summary of Phase II 220 MHZ Licenses to be Auctioned

Attachment B—List of Cases Pending Before the Commission Involving Non-Nationwide Phase I 220 MHZ Licensees

Attachment C—Guidelines for completion of FCC Forms 175 and 159, and Exhibits

Attachment D—Electronic Filing and Review of FCC Form 175

Attachment E—Summary Listing of Documents From the Commission and the Wireless Telecommunications Bureau Addressing Application of The Anti-Collusion Rules

Attachment F—List of Commenters

Note: Attachments A through F are not printed in the **Federal Register.** See the beginning of the Supplementary Information section for availability.

[FR Doc. 98–17147 Filed 6–26–98; 8:45 am]

BILLING CODE 6712–01–M

FEDERAL EMERGENCY MANAGEMENT AGENCY

Agency Information Collection Activities: Proposed Collection; Comment Request

ACTION: Notice and request for comments.

SUMMARY: The Federal Emergency Management Agency, as part of its continuing effort to reduce paperwork and respondent burden, invites the general public and other Federal agencies to take this opportunity to comment on proposed continuing information collections. In accordance with the Paperwork Reduction Act of 1995 (44 U.S.C. 3506(c)(2)(A)), this notice seeks comments concerning information required from employees of the Federal Emergency Management Agency who file a claim with the Agency under 31 U.S.C. 3721 for the loss of or damage to personal property which is incident to their service.

Supplementary Information. 31 U.S.C. 3721 requires claimants to substantiate their claims as a condition of payment by the Agency. The Agency's substantiation requirements are set forth in 44 CFR 11.76. There is no set form required by the Agency for filing a claim under this statute.

Collection of Information

Title: Claims of Federal Personnel for Personal Property Loss or Damage.

Type of Information Collection: Extension of a currently approved collection.

OMB Number: 3067–0167.

Form Numbers: None.

Abstract: The information is provided by FEMA personnel to make a claim against FEMA for personal property damage incident to service. The information is used by FEMA to determine the appropriate disposition and payment of claims.

Affected Public: Federal Government.

Number of Respondents: 7.

Frequency of Response: On occasion.

Hours Per Response: 1 hour.

Estimated Total Annual Burden Hours: 7.

Estimated Cost: None.

Comments

Written comments are solicited to: (a) evaluate whether the proposed data collection is necessary for the proper performance of the agency, including whether the information shall have practical utility; (b) evaluate the accuracy of the agency's estimate of the burden of the proposed collection of information, including the validity of the methodology and assumptions used; (c) enhance the quality, utility, and clarity of the information to be collected; and (d) minimize the burden of the collection of information on those who are to respond, including through the use of appropriate automated, electronic, mechanical, or other technological collection techniques or other forms of information technology, e.g., permitting electronic submission of responses. Comments should be received within 60 days of the date of this notice.

ADDRESSES: Interested persons should submit written comments to Muriel B. Anderson, FEMA Information Collections Officer, Federal Emergency Management Agency, 500 C Street, SW, Room 316, Washington, DC 20472. Telephone number (202) 646–2625. FAX number (202) 646–3524.

FOR FURTHER INFORMATION CONTACT: Contact Mr. Robert S. Brock, Associate General Counsel for General Law, Office of General Counsel, Federal Emergency

Management Agency, at (202) 646–4095 for additional information. Contact Ms. Anderson at (202) 646–2625 for copies of the proposed collection of information.

Reginald Trujillo,

Director, Program Services Division, Operations Support Directorate.

[FR Doc. 98–17238 Filed 6–26–98; 8:45 am]

BILLING CODE 6718–01–P

FEDERAL EMERGENCY MANAGEMENT AGENCY

[FEMA–855–DR]

Territory of American Samoa; Amendment to Notice of a Major Disaster Declaration

AGENCY: Federal Emergency Management Agency (FEMA).

ACTION: Notice.

SUMMARY: This notice amends the notice of a major disaster for the Territory of American Samoa (FEMA–855–DR), dated February 9, 1990, and related determinations.

EFFECTIVE DATE: June 17, 1998.

FOR FURTHER INFORMATION CONTACT: Madge Dale, Response and Recovery Directorate, Federal Emergency Management Agency, Washington, DC 20472, (202) 646–3260.

SUPPLEMENTARY INFORMATION: Notice is hereby given that the cost-sharing arrangements under FEMA–855–DR is adjusted at 90 percent Federal funding for eligible costs for the Public Assistance Program.

(The following Catalog of Federal Domestic Assistance Numbers (CFDA) are to be used for reporting and drawing funds: 83.537, Community Disaster Loans; 83.538, Cora Brown Fund Program; 83.539, Crisis Counseling; 83.540, Disaster Legal Services Program; 83.541, Disaster Unemployment Assistance (DUA); 83.542, Fire Suppression Assistance; 83.543, Individual and Family Grant (IFG) Program; 83.544, Public Assistance Grants; 83.545, Disaster Housing Program; 83.548, Hazard Mitigation Grant Program.)

Dated: June 17, 1998.

James L. Witt,

Director.

[FR Doc. 98–17248 Filed 6–26–98; 8:45 am]

BILLING CODE 6718–02–P

FEDERAL EMERGENCY MANAGEMENT AGENCY

[FEMA–1223–DR]

Florida; Amendment No.1 to Notice of a Major Disaster Declaration

AGENCY: Federal Emergency Management Agency (FEMA).

ACTION: Notice.

SUMMARY: This notice amends the notice of a major disaster for the State of Florida, (FEMA–1223–DR), dated June 18, 1998, and related determinations.

EFFECTIVE DATE: June 19, 1998.

FOR FURTHER INFORMATION CONTACT: Madge Dale, Response and Recovery Directorate, Federal Emergency Management Agency, Washington, DC 20472, (202) 646–3260.

SUPPLEMENTARY INFORMATION: The notice of a major disaster for the State of Florida, is hereby amended to include the following areas among those areas determined to have been adversely affected by the catastrophe declared a major disaster by the President in his declaration of June 18, 1998:

Alachua, Baker, Bay, Bradford, Broward, Calhoun, Charlotte, Citrus, Clay, Collier, Dade, DeSoto, Dixie, Escambia, Franklin, Gadsden, Gilchrist, Glades, Gulf, Hamilton, Hardee, Hendry, Hernando, Highlands, Hillsborough, Holmes, Indian River, Jackson, Jefferson, Lafayette, Lake, Lee, Leon, Levy, Liberty, Madision, Manatee, Marion, Martin, Monroe, Nassau, Okaloosa, Okeechobee, Orange, Osceola, Palm Beach, Pasco, Pinellas, Polk, St. Lucie, Santa Rosa, Sarasota, Sumter, Suwannee, Taylor, Union, Volusia, Walton, and Washington Counties for direct Federal assistance appropriate for required emergency measures, authorized under the Stafford Act, to save lives, protect property and public health and safety, and lessen or avert the threat of a catastrophe.

(The following Catalog of Federal Domestic Assistance Numbers (CFDA) are to be used for reporting and drawing funds: 83.537, Community Disaster Loans; 83.538, Cora Brown Fund Program; 83.539, Crisis Counseling; 83.540, Disaster Legal Services Program; 83.541, Disaster Unemployment Assistance (DUA); 83.542, Fire Suppression Assistance; 83.543, Individual and Family Grant (IFG) Program; 83.544, Public Assistance Grants; 83.545, Disaster Housing Program; 83.548, Hazard Mitigation Grant Program.)

Lacy E. Suiter,

Executive Associate Director, Response and Recovery Directorate.

[FR Doc. 98–17240 Filed 6–26–98; 8:45 am]

BILLING CODE 6718–02–P

FEDERAL EMERGENCY MANAGEMENT AGENCY

[FEMA–3126–EM]

Kansas; Emergency and Related Determinations

AGENCY: Federal Emergency Management Agency (FEMA).

ACTION: Notice.

SUMMARY: This is a notice of the Presidential declaration of an emergency for the State of Kansas (FEMA–3126–EM), dated June 9, 1998, and related determinations.

EFFECTIVE DATE: June 9, 1998.

FOR FURTHER INFORMATION CONTACT: Madge Dale, Response and Recovery Directorate, Federal Emergency Management Agency, Washington, DC 20472, (202) 646–3260.

SUPPLEMENTARY INFORMATION: Notice is hereby given that, in a letter dated June 9, 1998, the President declared an emergency under the authority of the Robert T. Stafford Disaster Relief and Emergency Assistance Act (42 U.S.C. 5121 *et seq.*), as follows:

I have determined that the damage in certain areas of the State of Kansas, resulting from an explosion on June 8, 1998, is of sufficient severity and magnitude to warrant an emergency declaration under the Robert T. Stafford Disaster Relief and Emergency Assistance Act, Pub. L. 93–288, as amended (''the Stafford Act''). I, therefore, declare that such an emergency exists in the State of Kansas.

Specifically, you are authorized to activate and deploy search and rescue teams to respond to this event as authorized under subsection 502(a) of the Stafford Act.

In addition, you are authorized to provide such other forms of emergency assistance as you may deem necessary.

Emergency assistance which you provide pursuant to this declaration will be at 75 percent Federal funding.

Notice is hereby given that pursuant to the authority vested in the Director of the Federal Emergency Management Agency under Executive Order 12148, I hereby appoint Carolyn J. Coleman of the Federal Emergency Management Agency to act as the Federal Coordinating Officer for this declared disaster.

I do hereby determine the following areas of the State of Kansas to have been affected adversely by this declared emergency disaster:

Sedgwick County

FEMA has been authorized to activate and deploy search and rescue teams to respond to the explosion in Sedgwick County, Kansas, pursuant to Title V of the Stafford Act.

(The following Catalog of Federal Domestic Assistance Numbers (CFDA) are to be used

for reporting and drawing funds: 83.537, Community Disaster Loans; 83.538, Cora Brown Fund Program; 83.539, Crisis Counseling; 83.540, Disaster Legal Services Program; 83.541, Disaster Unemployment Assistance (DUA); 83.542, Fire Suppression Assistance; 83.543, Individual and Family Grant (IFG) Program; 83.544, Public Assistance Grants; 83.545, Disaster Housing Program; 83.548, Hazard Mitigation Grant Program.)

James L. Witt,

Director.

[FR Doc. 98–17239 Filed 6–26–98; 8:45 am]

BILLING CODE 6718–02–P

FEDERAL EMERGENCY MANAGEMENT AGENCY

[FEMA–1222–DR]

New York; Amendment No. 1 to Notice of a Major Disaster Declaration

AGENCY: Federal Emergency Management Agency (FEMA).

ACTION: Notice.

SUMMARY: This notice amends the notice of a major disaster for the State of New York, (FEMA–1222–DR), dated June 16, 1998, and related determinations.

EFFECTIVE DATE: June 19, 1998.

FOR FURTHER INFORMATION CONTACT: Madge Dale, Response and Recovery Directorate, Federal Emergency Management Agency, Washington, DC 20472, (202) 646–3260.

SUPPLEMENTARY INFORMATION: The notice of a major disaster for the State of New York, is hereby amended to include the following areas among those areas determined to have been adversely affected by the catastrophe declared a major disaster by the President in his declaration of June 16, 1998:

Broome and Wyoming Counties for debris removal and emergency protective measures (Categories A and B) under the Public Assistance program.

(The following Catalog of Federal Domestic Assistance Numbers (CFDA) are to be used for reporting and drawing funds: 83.537, Community Disaster Loans; 83.538, Cora Brown Fund Program; 83.539, Crisis Counseling; 83.540, Disaster Legal Services Program; 83.541, Disaster Unemployment Assistance (DUA); 83.542, Fire Suppression Assistance; 83.543, Individual and Family Grant (IFG) Program; 83.544, Public Assistance Grants; 83.545, Disaster Housing Program; 83.548, Hazard Mitigation Grant Program.)

Lacy E. Suiter,

Executive Associate Director, Response and Recovery Directorate.

[FR Doc. 98–17241 Filed 6–26–98; 8:45 am]

BILLING CODE 6718–02–P

FEDERAL EMERGENCY MANAGEMENT AGENCY

[FEMA–1220–DR]

North Dakota; Major Disaster and Related Determinations

AGENCY: Federal Emergency Management Agency (FEMA).

ACTION: Notice.

SUMMARY: This is a notice of the Presidential declaration of a major disaster for the State of North Dakota (FEMA–1220–DR), dated June 15, 1998, and related determinations.

EFFECTIVE DATE: June 15, 1998.

FOR FURTHER INFORMATION CONTACT: Magda Ruiz, Response and Recovery Directorate, Federal Emergency Management Agency, Washington, DC 20472, (202) 646–3260.

SUPPLEMENTARY INFORMATION: Notice is hereby given that, in a letter dated June 15, 1998, the President declared a major disaster under the authority of the Robert T. Stafford Disaster Relief and Emergency Assistance Act (42 U.S.C. 5121 *et seq.*), as follows:

I have determined that the damage in certain areas of the State of North Dakota, resulting from flooding and ground saturation on March 2, 1998, and continuing, is of sufficient severity and magnitude to warrant a major disaster declaration under the Robert T. Stafford Disaster Relief and Emergency Assistance Act, Pub. L. 93–288, as amended (''the Stafford Act''). I, therefore, declare that such a major disaster exists in the State of North Dakota.

In order to provide Federal assistance, you are hereby authorized to allocate from funds available for these purposes, such amounts as you find necessary for Federal disaster assistance and administrative expenses.

You are authorized to provide Public Assistance and Hazard Mitigation in the designated areas and any other forms of assistance under the Stafford Act you may deem appropriate. Consistent with the requirement that Federal assistance be supplemental, any Federal funds provided under the Stafford Act for Public Assistance or Hazard Mitigation will be limited to 75 percent of the total eligible costs.

The time period prescribed for the implementation of section 310(a), Priority to Certain Applications for Public Facility and Public Housing Assistance, 42 U.S.C. 5153, shall be for a period not to exceed six months after the date of this declaration.

Notice is hereby given that pursuant to the authority vested in the Director of the Federal Emergency Management Agency under Executive Order 12148, I hereby appoint Leslie A. Rucker of the Federal Emergency Management Agency to act as the Federal Coordinating Officer for this declared disaster.

I do hereby determine the following areas of the State of North Dakota to have been affected adversely by this declared major disaster:

Barnes, Benson, Dickey, Nelson, Pembina, Pierce, Ramsey, Ransom, Richland, Rolette, Sargent, Stutsman, and Towner Counties, and the Indian reservations of the Spirit Lake Sioux Tribe and the Turtle Mountain Band of Chippewa for Public Assistance.

All counties within the State of North Dakota are eligible to apply for assistance under the Hazard Mitigation Grant Program.

(The following Catalog of Federal Domestic Assistance Numbers (CFDA) are to be used for reporting and drawing funds: 83.537, Community Disaster Loans; 83.538, Cora Brown Fund Program; 83.539, Crisis Counseling; 83.540, Disaster Legal Services Program; 83.541, Disaster Unemployment Assistance (DUA); 83.542, Fire Suppression Assistance; 83.543, Individual and Family Grant (IFG) Program; 83.544, Public Assistance Grants; 83.545, Disaster Housing Program; 83.548, Hazard Mitigation Grant Program.)

James L. Witt,

Director.

[FR Doc. 98–17242 Filed 6–26–98; 8:45 am]

BILLING CODE 6718–02–P

FEDERAL EMERGENCY MANAGEMENT AGENCY

[FEMA–1194–DR]

Commonwealth of the Northern Mariana Islands; Amendment to Notice of a Major Disaster Declaration

AGENCY: Federal Emergency Management Agency (FEMA).

ACTION: Notice.

SUMMARY: This notice amends the notice of a major disaster for Commonwealth of the Northern Mariana Islands (FEMA–1194–DR), dated December 24 1997, and related determinations.

EFFECTIVE DATE: June 16, 1998.

FOR FURTHER INFORMATION CONTACT: Madge Dale, Response and Recovery Directorate, Federal Emergency Management Agency, Washington, DC 20472, (202) 646–3630.

SUPPLEMENTARY INFORMATION: Notice is hereby given that the cost share arrangement under FEMA–1194–DR is adjusted at 100 percent Federal funding for eligible costs for the Individual and Family Grant Program.

(The following Catalog of Federal Domestic Assistance Numbers (CFDA) are to be used for reporting and drawing funds: 83.537, Community Disaster Loans; 83.538, Cora Brown Fund Program; 83.539, Crisis Counseling; 83.540, Disaster Legal Services Program; 83.541, Disaster Unemployment

Assistance (DUA); 83.542, Fire Suppression Assistance; 83.543, Individual and Family Grant (IFG) Program; 83.544, Public Assistance Grants; 83.545, Disaster Housing Program; 83.548, Hazard Mitigation Grant Program.)

James L. Witt,

Director.

[FR Doc. 98–17247 Filed 6–26–98; 8:45 am]

BILLING CODE 6718–02–P

FEDERAL EMERGENCY MANAGEMENT AGENCY

[FEMA–1219–DR]

Pennsylvania; Amendment No. 1 to Notice of a Major Disaster Declaration

AGENCY: Federal Emergency Management Agency (FEMA).

ACTION: Notice.

SUMMARY: This notice amends the notice of a major disaster for the State of Pennsylvania, (FEMA–1219–DR), dated June 8, 1998, and related determinations.

EFFECTIVE DATE: June 16, 1998.

FOR FURTHER INFORMATION CONTACT: Madge Dale, Response and Recovery Directorate, Federal Emergency Management Agency, Washington, DC 20472, (202) 646–3260.

SUPPLEMENTARY INFORMATION: The notice of a major disaster for the State of Pennsylvania, is hereby amended to include the following areas among those areas determined to have been adversely affected by the catastrophe declared a major disaster by the President in his declaration of June 8, 1998:

Beaver, Pike, and Susquehanna Counties for Individual Assistance.

(The following Catalog of Federal Domestic Assistance Numbers (CFDA) are to be used for reporting and drawing funds: 83.537, Community Disaster Loans; 83.538, Cora Brown Fund Program; 83.539, Crisis Counseling; 83.540, Disaster Legal Services Program; 83.541, Disaster Unemployment Assistance (DUA); 83.542, Fire Suppression Assistance; 83.543, Individual and Family Grant (IFG) Program; 83.544, Public Assistance Grants; 83.545, Disaster Housing Program; 83.548, Hazard Mitigation Grant Program.)

Lacy E. Suiter,

Executive Associate Director, Response and Recovery Directorate.

[FR Doc. 98–17243 Filed 6–26–98; 8:45 am]

BILLING CODE 6718–02–P

FEDERAL EMERGENCY MANAGEMENT AGENCY

[FEMA–1219–DR]

Pennsylvania; Major Disaster and Related Determinations

AGENCY: Federal Emergency Management Agency (FEMA).

ACTION: Notice.

SUMMARY: This is a notice of the Presidential declaration of a major disaster for the Commonwealth of Pennsylvania (FEMA–1219–DR), dated June 8, 1998, and related determinations.

EFFECTIVE DATE: June 8, 1998.

FOR FURTHER INFORMATION CONTACT: Madge Dale, Response and Recovery Directorate, Federal Emergency Management Agency, Washington, DC 20472, (202) 646–3260.

SUPPLEMENTARY INFORMATION: Notice is hereby given that, in a letter dated June 8, 1998, the President declared a major disaster under the authority of the Robert T. Stafford Disaster Relief and Emergency Assistance Act (42 U.S.C. 5121 *et seq.*), as follows:

I have determined that the damage in certain areas of the Commonwealth of Pennsylvania, resulting from severe storms, tornadoes and flooding on May 31, through June 2, 1998, is of sufficient severity and magnitude to warrant a major disaster declaration under the Robert T. Stafford Disaster Relief and Emergency Assistance Act, Pub. L. 93–288, as amended (''the Stafford Act''). I, therefore, declare that such a major disaster exists in the Commonwealth of Pennsylvania.

In order to provide Federal assistance, you are hereby authorized to allocate from funds available for these purposes, such amounts as you find necessary for Federal disaster assistance and administrative expenses.

You are authorized to provide Individual Assistance and Hazard Mitigation in the designated areas and any other forms of assistance under the Stafford Act you may deem appropriate. Consistent with the requirement that Federal assistance be supplemental, any Federal funds provided under the Stafford Act for Hazard Mitigation will be limited to 75 percent of the total eligible costs. If Public Assistance is later requested and warranted, Federal funds provided under that program will also be limited to 75 percent of the total eligible costs.

The time period prescribed for the implementation of section 310(a), Priority to Certain Applications for Public Facility and Public Housing Assistance, 42 U.S.C. 5153, shall be for a period not to exceed six months after the date of this declaration.

Notice is hereby given that pursuant to the authority vested in the Director of the Federal Emergency Management Agency under Executive Order 12148, I hereby appoint Jack Schuback of the Federal Emergency Management Agency to act as the Federal Coordinating Officer for this declared disaster.

I do hereby determine the following areas of the Commonwealth of Pennsylvania to have been affected adversely by this declared major disaster:

Allegheny, Berks, Somerset, and Wyoming Counties for Individual Assistance.

All counties within the Commonwealth of Pennsylvania are eligible to apply for assistance under the Hazard Mitigation Grant Program.

(The following Catalog of Federal Domestic Assistance Numbers (CFDA) are to be used for reporting and drawing funds: 83.537, Community Disaster Loans; 83.538, Cora Brown Fund Program; 83.539, Crisis Counseling; 83.540, Disaster Legal Services Program; 83.541, Disaster Unemployment Assistance (DUA); 83.542, Fire Suppression Assistance; 83.543, Individual and Family Grant (IFG) Program; 83.544, Public Assistance Grants; 83.545, Disaster Housing Program; 83.548, Hazard Mitigation Grant Program.)

James L. Witt,

Director.

[FR Doc. 98–17244 Filed 6–26–98; 8:45 am]

BILLING CODE 6718–02–P

FEDERAL EMERGENCY MANAGEMENT AGENCY

[FEMA–1218–DR]

South Dakota; Amendment No. 3 to Notice of a Major Disaster Declaration

AGENCY: Federal Emergency Management Agency (FEMA).

ACTION: Notice.

SUMMARY: This notice amends the notice of a major disaster for the State of South Dakota, (FEMA–1218–DR), dated June 1, 1998, and related determinations.

EFFECTIVE DATE: June 18, 1998.

FOR FURTHER INFORMATION CONTACT: Madge Dale, Response and Recovery Directorate, Federal Emergency Management Agency, Washington, DC 20472, (202) 646–3260.

SUPPLEMENTARY INFORMATION: The notice of a major disaster for the State of South Dakota, is hereby amended to include Disaster Unemployment Assistance in the following area determined to have been adversely affected by the catastrophe declared a major disaster by the President in his declaration of June 1, 1998: Day County for Disaster Unemployment Assistance.

(The following Catalog of Federal Domestic Assistance Numbers (CFDA) are to be used

for reporting and drawing funds: 83.537, Community Disaster Loans; 83.538, Cora Brown Fund Program; 83.539, Crisis Counseling; 83.540, Disaster Legal Services Program; 83.541, Disaster Unemployment Assistance (DUA); 83.542, Fire Suppression Assistance; 83.543, Individual and Family Grant (IFG) Program; 83.544, Public Assistance Grants; 83.545, Disaster Housing Program; 83.548, Hazard Mitigation Grant Program.)

Lacy E. Suiter,

Executive Associate Director, Response and Recovery Directorate.

[FR Doc. 98–17245 Filed 6–26–98; 8:45 am]

BILLING CODE 6718–02–P

FEDERAL EMERGENCY MANAGEMENT AGENCY

[FEMA–1215–DR]

Tennessee; Amendment No. 9 to Notice of a Major Disaster Declaration

AGENCY: Federal Emergency Management Agency (FEMA).

ACTION: Notice.

SUMMARY: This notice amends the notice of a major disaster for the State of Tennessee, (FEMA–1215-DR), dated April 20, 1998, and related determinations.

EFFECTIVE DATE: June 15, 1998.

FOR FURTHER INFORMATION CONTACT: Madge Dale, Response and Recovery Directorate, Federal Emergency Management Agency, Washington, DC 20472, (202) 646–3260.

SUPPLEMENTARY INFORMATION: The notice of a major disaster for the State of Tennessee, is hereby amended to include the following area among those areas determined to have been adversely affected by the catastrophe declared a major disaster by the President in his declaration of April 20, 1998:

Lauderdale County for Public Assistance.

(The following Catalog of Federal Domestic Assistance Numbers (CFDA) are to be used for reporting and drawing funds: 83.537, Community Disaster Loans; 83.538, Cora Brown Fund Program; 83.539, Crisis Counseling; 83.540, Disaster Legal Services Program; 83.541, Disaster Unemployment Assistance (DUA); 83.542, Fire Suppression Assistance; 83.543, Individual and Family Grant (IFG) Program; 83.544, Public Assistance Grants; 83.545, Disaster Housing Program; 83.548, Hazard Mitigation Grant Program.)

Lacy E. Suiter,

Executive Associate Director, Response and Recovery Directorate.

[FR Doc. 98–17246 Filed 6–26–98; 8:45 am]

BILLING CODE 6718–02–P

FEDERAL MARITIME COMMISSION

Ocean Freight Forwarder License Applicants

Notice is hereby given that the following applicants have filed with the Federal Maritime Commission applications for licenses as ocean freight forwarders pursuant to section 19 of the Shipping Act of 1984 (46 U.S.C. app. 1718 and 46 CFR 510).

Persons knowing of any reason why any of the following applicants should not receive a license are requested to contact the Office of Freight Forwarders, Federal Maritime Commission, Washington, DC 20573.

Damon Lavelle Wilson, 10010 Rio Bravo, Houston, TX 77064, Sole Proprietor.

Toriello Passarelli, Inc. d/b/a, Toriello Freight International, 8538 NW 72nd Street, Miami, FL 33166, Officers: Mario Toriello, President, Elizabeth Cano, Vice President.

Dated: June 23, 1998.

Joseph C. Polking,

Secretary.

[FR Doc. 98–17140 Filed 6–26–98; 8:45 am]

BILLING CODE 6730–01–M

FEDERAL MARITIME COMMISSION

[Docket No. 98–09]

Kin Bridge Express Inc. and Kin Bridge Express (U.S.A.) Inc.—Possible Violations of Sections 8, 10(a)(1), 10(b)(1) and 23 of the Shipping Act of 1984; Order of Investigation and Hearing

Kin Bridge Express Inc. (''Kin Bridge Taiwan'') is a tariffed and bonded non-vessel-operating common carrier (''NVOCC'') located at 2nd Floor, No. 80, Section 2, Chang An East Road, Taipei 10405, Taiwan. Kin Bridge Taiwan holds out to operate as an NVOCC pursuant to its tariff No. 015344–002, filed April 9, 1998. Wilson Chiao is President of Kin Bridge Taiwan.

Kin Bridge Express (U.S.A.) Inc. (''Kin Bridge USA'') was, until April 18, 1998, a tariffed and bonded NVOCC located at 182–30 150th Road, Jamaica, New York 11413. Effective April 18, Kin Bridge USA canceled its NVOCC tariff and transferred its bond to Kin Bridge Taiwan.[1] Kin Bridge USA continues to serve as U.S. destination agent for Kin Bridge Taiwan and as its designated resident agent for service of process. The President of Kin Bridge USA is Michael Hong.

It appears that Kin Bridge Taiwan, acting as shipper on certain shipments on which it was doing business as NVOCC, participated in a scheme of commodity misdescriptions on at least 73 shipments transported by an ocean common carrier between January 7, 1996 and February 4, 1997. The shipments originated from Kin Bridge's offices in Taiwan and Hong Kong and were consigned to Kin Bridge USA in New York. Kin Bridge Taiwan issued a ''house,'' of NVOCC, bill of lading for each shipment for tender by the ultimate consignee to Kin Bridge USA upon arrival of the cargo.

It further appears that Hanjin Shipping Co. and other ocean common carriers rated the commodities in accordance with the false cargo description furnished by Kin Bridge Taiwan, and its U.S. destination agent, Kin Bridge USA, accepted delivery of the cargo and made payment to the ocean carrier on the basis of the resulting lower rate. Other contemporaneous documentation, such as the arrival notice issued by Kin Bridge USA to the U.S. consignee, indicate that Kin Bridge USA and its principals knew that the shipments actually consisted of commodities different from those listed on the ocean common carrier's bills of lading.

Moreover, it appears that the rates assessed and collected by Kin Bridge Taiwan and its U.S. agent Kin Bridge USA for these shipments bear no relation to the rates set forth in any Kin Bridge tariff then on file with the Commission. Prior to April 9, 1998, Kin Bridge Taiwan in fact had no tariff and no NVOCC bond; nonetheless it was actively engaged in negotiating and executing service contracts with Hanjin Shipping Co.[2] and possibly other ocean common carriers prior to such date. Nor could the tariff of Kin Bridge USA set forth the applicable rates, because Kin Bridge USA only published a limited number of rates, which were applicable to its outbound NVOCC services.

It further appear that, during the period January 1996 through April 1998, numerous outbound shipments were originated by Kin Bridge USA in its capacity as an NVOCC, which were destined to Kin Bridge USA agents in the Far East. Review of the ATFI tariff of Kin Bridge USA indicates that many of these shipments may not have been covered by outbound rates then on file in the tariff of Kin Bridge USA.

[1] Kin Bridge Taiwan maintains an NVOCC bond, No. 055326, in the amount of $50,000 with Washington International Insurance Company, Itasca, Illinois.

[2] Hanjin Service Contract No. 3852, and Hanjin Service Contract No. 5117, both signed by Kin Bridge Taiwan.

Since Kin Bridge USA canceled its tariff on April 18, 1998, Kin Bridge Taiwan has maintained what many be characterized as a ''shell'' tariff, consisting of ten commodity descriptions, four of which are applicable to Cargo N.O.S. Only these latter Cargo N.O.S. rates apply to cargo inbound from the Far East. Kin Bridge Taiwan does not publish ''per container'' rates for inbound cargo, nor does it appear likely that it charges those rates which it does publish, since these are assessed solely on a weight/measurement (W/M) ton basis. Nonetheless, it appears that Kin Bridge Taiwan is actively soliciting NVOCC cargo, and that it may not be assessing or collecting those rates set forth in its tariff.

Section 10(a)(1) of the Shipping Act of 1984 (''1984 Act''), 46 U.S.C. app. sec. 1709(a)(1), prohibits any person knowingly and willfully, directly or indirectly, by means of false billings, false classification, false weighing, false report of weight, false measurement, or by any other unjust or unfair device or means, to obtain or attempt to obtain ocean transportation for property at least than the rates or charges that would otherwise be applicable. Section 10(b)(1), 46 U.S.C. app. sec. 1709(b)(1), prohibits a common carrier from charging, collecting or receiving greater, less or different compensation for the transportation of property than the rates and charges set forth in its tariff. Sections 8 and 23 of the 1984 Act, 46 U.S.C. app. secs. 1707 and 1721, require that every NVOCC maintain a tariff and a bond. Under section 13 of the 1984 Act, 46 U.S.C. app. sec. 1712, a person is subject to a civil penalty of not more than $25,000 for each violation knowingly and willfully committed, and not more than $5,000 for other violations.[3] Section 13 further provides that a common carrier's tariff may be suspended for violations of section 10(b)(1) for a period not to exceed one year, while section 23 provides for a similar suspension in the case of violations of section 10(a)(1) of the 1984 Act.

Now therefore, it is ordered, That pursuant to sections 10, 11, 13, and 23 of the 1984 Act, 46 U.S.C. app. secs. 1709, 1710, 1712, and 1721, an investigation is instituted to determine:

(1) Whether Kin Bridge Express Inc. and Kin Bridge Express (USA) Inc. violated section 10(a)(1) of the 1984 Act by directly or indirectly obtaining transportation at least than the rates and charges otherwise applicable through the means of misdescription of cargo;

(2) Whether Kin Bridge Express Inc. and Kin Bridge Express (USA) Inc. violated section 10(b)(1) of the 1984 Act by charging, demanding, collecting or receiving less or different compensation for the transportation of property than the rates and charges shown in their respective NVOCC tariffs;

(3) Whether Kin Bridge Express Inc. violated sections 8 and 23 of the 1984 Act by operating as a non-vessel-operating common carrier without having a tariff and bond on file with the Commission:

(4) Whether, in the event violations of sections 8, 10(a)(1), 10(b)(1), and 23 of the 1984 Act are found, civil penalties should be assessed and, if so, the amount of such penalties;

(5) Whether, in the event violations of sections 10(a)(1) and 10(b)(1) of the 1984 Act are found, the tariff of Kin Bridges Express Inc. should be suspended; and

(6) Whether, in the event violations are found, an appropriate cease and desist order should be issued.

It is further ordered, that a public hearing be held in this proceeding and that this matter be assigned for hearing before an Administrative Law Judge of the Commission's Office of Administrative Law Judges at a date and place to be hereafter determined by the Administrative Law Judge in compliance with Rule 61 of the Commission's rules of practice and procedure, 46 CFR 502.61. The hearing shall include oral testimony and cross-examination in the discretion of the Presiding Administrative Law Judge only after consideration has been given by the parties and the Presiding Administrative Law Judge to the use of alternative forms of dispute resolution, and upon a proper showing that there are genuine issues of material fact that cannot be resolved on the basis of sworn statements, affidavits, deposition, or other documents or that the nature of the matters in issue is such that an oral hearing and cross-examination are necessary for the development of an adequate record;

It is further ordered, that Kim Bridge Express Inc. and Kin Bridge Express (U.S.A.) Inc. are designated as Respondents in this proceeding;

It is further ordered, that the Commission's Bureau of Enforcement is designated a party to this proceeding;

It is further ordered, that notice of this order be published in the **Federal Register**, and a copy be served on parties of record;

It is further ordered, that other persons having an interest in participating in this proceeding may file petitions for leave to intervene in accordance with Rule 72 of the Commission's rules of practice and procedure, 46 CFR 502.72;

It is further ordered, that all further notices, orders, and/or decisions issued by or on behalf of the Commission in this proceeding, including notice of the time and place of hearing or prehearing conference, shall be served on parties of record;

It is further ordered, that all documents submitted by any party of record in this proceeding shall be directed to the Secretary, Federal Maritime Commission, Washington, DC 20573, in accordance with Rule 118 of the Commission's rules and practice and procedure, 46 CFR 502.118, and shall be served on parties of record; and

It is further ordered, that in accordance with Rule 61 of the Commission's Rules of Practice and Procedures, the initial decision of the Administrative Law Judge shall be issued by June 23, 1999 and the final decision of the Commission shall be issued by October 21, 1999.

By the Commission.

Joseph C. Polking,

Secretary.

[FR Doc. 98–17141 Filed 6–26–98; 8:45 am]

BILLING CODE 6730–01–M

[3] The maximum penalties are raised by 10 percent for violations occurring after November 7, 1996. *See Inflation Adjustment of Civil Monetary Penalties,* 27 S.R.R. 809 (1996).

FEDERAL RESERVE SYSTEM

Change in Bank Control Notices; Acquisitions of Shares of Banks or Bank Holding Companies

The notificants listed below have applied under the Change in Bank Control Act (12 U.S.C. 1817(j)) and § 225.41 of the Board's Regulation Y (12 CFR 225.41) to acquire a bank or bank holding company. The factors that are considered in acting on the notices are set forth in paragraph 7 of the Act (12 U.S.C. 1817(j)(7)).

The notices are available for immediate inspection at the Federal Reserve Bank indicated. The notices also will be available for inspection at the offices of the Board of Governors. Interested persons may express their views in writing to the Reserve Bank indicated for that notice or to the offices of the Board of Governors. Comments must be received not later than July 15, 1998.

A. Federal Reserve Bank of St. Louis (Randall C. Sumner, Vice President) 411 Locust Street, St. Louis, Missouri 63102-2034:

1. Henderson Family Limited Partnership, Vienna, Missouri; to acquire voting shares of Maries County Bancorp, Inc., Vienna, Missouri and Progress Bancshares, Inc., Sullivan, Missouri, and thereby indirectly acquire Progress Bank, Sullivan, Missouri; Maries County Bank, Vienna, Missouri; and Belle State Bank, Belle, Missouri.

B. Federal Reserve Bank of Kansas City (D. Michael Manies, Assistant Vice President) 925 Grand Avenue, Kansas City, Missouri 64198-0001:

1. Donald Ray Clark and Kitty Darline Clark, both of Anadarko, Oklahoma; to acquire voting shares of First State Bank, Anadarko, Oklahoma.

Board of Governors of the Federal Reserve System, June 23, 1998.

Robert deV. Frierson,

Associate Secretary of the Board.

[FR Doc. 98–17205 Filed 6-26-98; 8:45 am]

BILLING CODE 6210-01-F

FEDERAL RESERVE SYSTEM

Formations of, Acquisitions by, and Mergers of Bank Holding Companies

The companies listed in this notice have applied to the Board for approval, pursuant to the Bank Holding Company Act of 1956 (12 U.S.C. 1841 *et seq.*) (BHC Act), Regulation Y (12 CFR Part 225), and all other applicable statutes and regulations to become a bank holding company and/or to acquire the assets or the ownership of, control of, or the power to vote shares of a bank or bank holding company and all of the banks and nonbanking companies owned by the bank holding company, including the companies listed below.

The applications listed below, as well as other related filings required by the Board, are available for immediate inspection at the Federal Reserve Bank indicated. The application also will be available for inspection at the offices of the Board of Governors. Interested persons may express their views in writing on the standards enumerated in the BHC Act (12 U.S.C. 1842(c)). If the proposal also involves the acquisition of a nonbanking company, the review also includes whether the acquisition of the nonbanking company complies with the standards in section 4 of the BHC Act. Unless otherwise noted, nonbanking activities will be conducted throughout the United States.

Unless otherwise noted, comments regarding each of these applications must be received at the Reserve Bank indicated or the offices of the Board of Governors not later than July 23, 1998.

A. Federal Reserve Bank of Cleveland (Paul Kaboth, Banking Supervisor) 1455 East Sixth Street, Cleveland, Ohio 44101-2566:

1. Citizens Bancshares, Inc., Salineville, Ohio; to merge with Mid Am, Inc., Bowling Green, Ohio, and thereby indirectly acquire Adrian State Bank, Adrian, Michigan; American Community Bank, N.A., Lima, Ohio; Amerifirst Bank, N.A., Xenia, Ohio; First National Bank of Northwestern Ohio, Bryan, Ohio; Mid American National Bank and Trust Company, Toledo, Ohio; and Northside Deposit Bank, Pittsburgh, Pennsylvania.

In connection with this application, Citizens Bancshares also has applied to acquire MFI Investments Corp, Bryan, Ohio; Mid Am Recovery Services, Inc., Clearwater, Florida; Mid Am Credit Corp, Columbus, Ohio; Mid Am Financial Services, Inc., Carmel, Indiana; and Mid Am Private Trust, N.S., Cincinnati, Ohio, and thereby engage directly in permissible broker/dealer securities activities pursuant to §§ 225.28(b)(7) and 225.28(b)(8) of Regulation Y; permissible collection agency activities pursuant to § 225.28(b)(2)(iv) of Regulation Y; permissible lending and leasing activities pursuant to §§ 225.28(b)(1) and 225.28(b)(3) of Regulation Y; permissible consumer finance, lending, and loan servicing activities pursuant to § 225.28(b)(1) of Regulation Y; and permissible trust company functions pursuant to § 225.28(b)(5) of Regulation Y.

B. Federal Reserve Bank of St. Louis (Randall C. Sumner, Vice President) 411 Locust Street, St. Louis, Missouri 63102-2034:

1. Mercantile Bancorporation Inc., St. Louis, Missouri; and its wholly owned subsidiary, Ameribanc, Inc., St. Louis, Missouri, to acquire 100 percent of the voting shares and merge with First Financial Bancorporation, Iowa City, Iowa, and thereby indirectly acquire First National Bank Iowa, Iowa City, Iowa.

C. Federal Reserve Bank of Kansas City (D. Michael Manies, Assistant Vice President) 925 Grand Avenue, Kansas City, Missouri 64198-0001:

1. BancFirst Corporation, Oklahoma City, Oklahoma; to acquire 100 percent of the voting shares of AmQuest Financial Corporation, Duncan, Oklahoma, and thereby indirectly acquire AmQuest Bank, N.A., Lawton, Oklahoma, and Exchange National Bank and Trust Company, Ardmore, Oklahoma.

D. Federal Reserve Bank of Dallas (W. Arthur Tribble, President) 2200 North Pearl Street, Dallas, Texas 75201-2272:

1. Violeta Investments, Ltd., Hebbronville, Texas; to become a bank holding company by acquiring 9.18 percent of the voting shares of Hebbronville State Bank, Hebbronville, Texas.

Board of Governors of the Federal Reserve System, June 23, 1998.

Robert deV. Frierson,

Associate Secretary of the Board.

[FR Doc. 98–17206 Filed 6-26-98; 8:45 am]

BILLING CODE 6210-01-F

FEDERAL RESERVE SYSTEM

Formations of, Acquisitions by, and Mergers of Bank Holding Companies

The companies listed in this notice have applied to the Board for approval, pursuant to the Bank Holding Company Act of 1956 (12 U.S.C. 1841 *et seq.*) (BHC Act), Regulation Y (12 CFR Part 225), and all other applicable statutes and regulations to become a bank holding company and/or to acquire the assets or the ownership of, control of, or the power to vote shares of a bank or bank holding company and all of the banks and nonbanking companies owned by the bank holding company, including the companies listed below.

The applications listed below, as well as other related filings required by the Board, are available for immediate inspection at the Federal Reserve Bank indicated. The application also will be available for inspection at the offices of the Board of Governors. Interested persons may express their views in writing on the standards enumerated in the BHC Act (12 U.S.C. 1842(c)). If the proposal also involves the acquisition of a nonbanking company, the review also includes whether the acquisition of the nonbanking company complies with the standards in section 4 of the BHC Act. Unless otherwise noted, nonbanking activities will be conducted throughout the United States.

Unless otherwise noted, comments regarding each of these applications must be received at the Reserve Bank indicated or the offices of the Board of Governors not later than July 24, 1998.

A. Federal Reserve Bank of Atlanta (Lois Berthaume, Vice President) 104 Marietta Street, N.W., Atlanta, Georgia 30303-2713:

1. CCF Holding Company, Jonesboro, Georgia; to become a bank holding company by acquiring 100 percent of the voting shares of Heritage Bank, Jonesboro, Georgia.

2. SunTrust Banks, Inc., Atlanta, Georgia, and SunTrust Banks of Florida, Inc., Orlando, Florida; to merge with Citizens Bancorporation, Inc., Marianna,

Florida, and thereby indirectly acquire Citizens Bank of Marianna, Marianna, Florida, and Gladsen State Bank, Chattahoochee, Florida.

B. Federal Reserve Bank of Chicago (Philip Jackson, Applications Officer) 230 South LaSalle Street, Chicago, Illinois 60690-1413:

1. Pilot Grove Savings Bank Employee Stock Ownership Plan, Pilot Grove, Iowa; to acquire 1.82 percent of the voting shares of Pilot Bancorp, Inc., Pilot Grove, Iowa, and thereby indirectly acquire Pilot Grove Savings Bank, Pilot Grove, Iowa.

Board of Governors of the Federal Reserve System, June 24, 1998.

Robert deV. Frierson,

Associate Secretary of the Board.

[FR Doc. 98–17252 Filed 6-26-98; 8:45 am]

BILLING CODE 6210-01-F

FEDERAL RESERVE SYSTEM

Formations of, Acquisitions by, and Mergers of Bank Holding Companies; Correction

This notice corrects a notice (FR Doc. 98-13790) published on pages 28385-28386 of the issue for Friday, May 22, 1998.

Under the Federal Reserve Bank of Richmond heading, the entry for NationsBank Corporation and NationsBank (DE) Corporation, both in Charlotte, North Carolina (collectively NationsBank), is revised to read as follows:

A. Federal Reserve Bank of Richmond (A. Linwood Gill III, Assistant Vice President) 701 East Byrd Street, Richmond, Virginia 23261-4528:

1. NationsBank Corporation and NationsBank (DE) Corporation, both in Charlotte, North Carolina (collectively, NationsBank); to merge with BankAmerica Corporation, San Francisco, California (BankAmerica), and thereby acquire the following bank subsidiaries of BankAmerica: Bank of America National Trust and Savings Association, San Francisco, California; Bank of America Texas, National Association, Dallas, Texas; Bank of America National Association, Phoenix, Arizona; and Bank of America Community Development Bank, Walnut Creek, California. On consummation of the proposed transaction, NationsBank would be renamed BankAmerica Corporation. NationsBank may form one or more intermediate bank holding companies.

In connection with the proposed transaction, NationsBank has provided notice to acquire all of the nonbank subsidiaries of BankAmerica and to engage, directly or indirectly through such nonbank subsidiaries, in a variety of nonbanking activities that previously have been determined to be permissible for bank holding companies. NationsBank also would continue to control all of its existing bank and nonbank subsidiaries.

The comment period on this application has been extended. Comments on this application must be received by July 9, 1998.

Board of Governors of the Federal Reserve System, June 24, 1998.

Robert deV. Frierson,

Associate Secretary of the Board.

[FR Doc. 98–17253 Filed 6-26-98; 8:45 am]

BILLING CODE 6210-01-F

DEPARTMENT OF HEALTH AND HUMAN SERVICES

Centers for Disease Control and Prevention

[Announcement Number 98086]

Translational Research Centers for Diabetes Control Within Managed-Care Settings; Availability of Funds for Fiscal Year 1998

Introduction

The Centers for Disease Control and Prevention (CDC) announces the availability of fiscal year (FY) 1998 funds, and invites cooperative agreement applications for a multi-center, collaborative, diabetes translational research initiative within managed-care settings to (1) evaluate the extent to which healthcare providers and healthcare delivery systems implement accepted standards of diabetes care (e.g., American Diabetes Association), which can reduce the burden of diabetes and its complications; (2) explore the factors that affect variations in implementing quality diabetes care; and (3) develop and test strategies aimed at closing the gap between existing practice and optimal standards of care.

The collaborative studies will consist of two phases. Phase 1 (12 months)—Planning, collaborative development of the protocol(s), and development of the manual of operations. Phase 2 (48 months)—Conduct of studies selected by the Steering Committee, analysis, and reporting of the results.

Under a Request for Contract, FY 1998 funds will be made available to fund one Data Coordinating Center (DCC). The organization funded for the DCC will not be eligible to receive funds under this Program Announcement. The DCC will collaborate with the recipients under this announcement in the design and writing of the study protocol(s) and consent forms, creation of the data collection forms, and writing of the manual(s) of operations. In addition, it will assist with the development of the operational plans, develop a system to collect, manage, and store scientific data, management and analysis, and collaborate with the Translational Research Centers in reporting of results.

CDC is committed to achieving the health promotion and disease prevention objectives of Healthy People 2000, a national activity to reduce morbidity and mortality and improve the quality of life. This announcement is related to the priority area of Diabetes and Chronic Disabling Conditions. (For ordering a copy of Healthy People 2000, see the section Where to Obtain Additional Information.)

Authority

This program is authorized under sections 301(a) and 317(k)(2) of the Public Health Service Act, as amended (42 U.S.C. 241(a) and 247b (k)(2)). Applicable program regulations are found in 42 CFR Part 51b—Project Grants for Preventive Health Services.

Smoke-Free Workplace

CDC strongly encourages all grant recipients to provide a smoke-free workplace and to promote the non-use of all tobacco products, and Pub. L. 103–227, the Pro-Children Act of 1994, prohibits smoking in certain facilities that receive Federal funds in which education, library, child care, health care, and early childhood development services are provided to children.

Eligible Applicants

Eligible applicants are public and private nonprofit domestic organizations operating within managed-care settings and providing services to a minimum of 5,000 people with diabetes. Thus, managed-care organizations, teaching hospitals, universities, colleges, and research institutions are eligible to apply. Applicants claiming nonprofit status must include evidence of nonprofit status with their application.

Minority individuals and women are encouraged to apply as Principal Investigators. Institutions caring for large numbers of racial and ethnic minority groups with diabetes are especially encouraged to apply.

Funding Preference: A funding preference will be given to applications under the following conditions: Women, racial, and ethnic minority populations to be accessed by the applicant—to ensure that the selected Diabetes

Translational Research Centers will together have a good balance of racial and ethnic minority groups.

Applicants must have direct access to a population of at least 5,000 people with diabetes or access through a partnership, operating within a managed-care setting.

Institutions may apply as a single entity or in a collaborative partnership. In this regard, applicants are encouraged to form collaborative arrangements with investigators at minority institutions or minority investigators at other institutions. However, only one institution will be named as the recipient of grant funds in a partnership.

The expertise appropriate for the Translational Research Center applications includes a knowledge of the clinical, epidemiological, and health services research aspects of diabetes. All eligible applicants must have diabetes-related research capacity within a managed-care setting, i.e., access to large numbers of patients with diabetes (minimum of 5,000); strong multi disciplinary research groups, access to good data systems, access to academic skills in health services research, epidemiology, survey design, behavioral sciences, and health economics.

Eligibility characteristics must be clearly specified with appropriate documentation in the Application Requirements section of your application (see Application Content).

Note: Effective January 1, 1996, Pub. L. 104–65 states that an organization described in section 501(c)(4) of the Internal Revenue Code of 1986 which engages in Lobbying activities shall not be eligible for the receipt of Federal funds constituting an award, grant (cooperative agreement), contract, loan, or any other form.

Availability of Funds

Approximately $800,000 is available in FY 1998 to fund up to four Translational Research Centers. It is expected that the average award during the planning phase (Year 1) of this project will be $200,000 (including direct and indirect costs), ranging from $150,000 to $250,000. However, it is anticipated that additional funds may be available in FY 1999 to increase the average award for Year 01 to approximately $500,000, ranging from $300,000 to $700,000.

Please plan your project in anticipation of these additional funds. It is expected that awards will begin on or before September 30, 1998, and will be made for a 12-month budget period within a project period of up to 5 years. Funding estimates may vary and are subject to change.

Continuation awards within the project period will be made on the basis of satisfactory progress and the availability of funds. At this time, CDC anticipates that there will not be a renewed competition after five years.

Use of Funds

Allowable Uses: Funds are awarded for a specifically defined purpose and must be targeted for implementation and management of the project. Funds can support personnel, services directly related to the project, and the purchase of hardware and software for data collection, analysis, and project management and evaluation purposes.

Prohibited Uses: Cooperative agreement funds under this program announcement cannot be used for (1) construction, (2) renovation, (3) the purchase or lease of passenger vehicles or vans, (4) to supplant non-federal funds that would otherwise be made available for this purpose, or (5) cost of regular patient care.

Restrictions on Lobbying: Applicants should be aware of restrictions on the use of Health and Human Services (HHS) funds for lobbying of Federal or State legislative bodies. Under the provisions of 31 U.S.C. Section 1352 (which has been in effect since December 23, 1989), recipients (and their subtier contractors) are prohibited from using appropriated Federal funds (other than profits from a Federal contract) for lobbying Congress or any Federal agency in connection with the award of a particular contract, grant, cooperative agreement, or loan. This includes grants and cooperative agreements that, in whole or in part, involve conferences for which Federal funds cannot be used directly or indirectly to encourage participants to lobby or to instruct participants on how to lobby.

In addition, the FY 1998 Department of Labor, Health and Human Services, and Education, and Related Agencies Appropriations Act, (Pub. L. 105–78) states in section 503(a) and (b) that no part of any appropriation contained in this Act shall be used, other than for normal and recognized executive-legislative relations, for publicity or propaganda purposes, for the preparation, distribution, or use of any kit, pamphlet, booklet, publication, radio, television, or video presentation designed to support or defeat legislation pending before the Congress or any State legislature, except in presentation to the Congress or any State legislature itself. No part of any appropriation contained in this Act shall be used to pay the salary or expenses of any grant or contract recipient, or agency acting for such recipient, related to any activity designed to influence legislation or appropriations pending before Congress or any State legislature.

Background

A considerable body of evidence exists for the efficacy of interventions (e.g., glycemic control, cardiovascular disease (CVD) risks reduction, screening for diabetes complications) to reduce the avoidable burden of diabetes. Nevertheless, the effectiveness, generalizability, feasibility, and sustainability of several of these interventions in real-life settings are less than clear. Furthermore, several reports suggest that considerable gaps exist between existing practice and recommended standards of diabetes care for people with diabetes. For example, the American Diabetes Association has recommended standards of care for several aspects of diabetes management (American Diabetes Association, Clinical Practice Recommendations 1998, Diabetes Care 1998;21 (Suppl.1). However, national estimates from the Behavioral Risk Factor Surveillance System indicate that the population of Americans receiving appropriate diabetes care practices such as foot and eye examinations, glycosylated hemoglobin, and other preventive care evaluations fall short of the recommended standards.

Managed care represents a revolution in the way health care is funded, organized, and delivered in the United States, and has affected the way in which diabetes treatment and control are conducted in both the private and public sectors. In the public sector, many health departments are in some stage of transition from directly delivering clinical services to using other delivery models that involve managed care. Thus, managed-care providers play a key role in the way people with diabetes are diagnosed and managed for increasing numbers of Americans. With more diagnostic and treatment services for diabetes being conducted in managed care, new partnerships are needed between managed-care health plans and public health agencies to design and implement essential and innovative diabetes-related services. Furthermore, managed-care (by virtue of coordinating all care for persons with diabetes) is probably the closest approximation to population medicine currently available in the United States. Managed-care, therefore, offers significant opportunities to understand and test intervention effectiveness and cost-effectiveness within a real-life context,

as well as the public health impact of system wide interventions.

Purpose

The purpose of this diabetes translational research initiative is to initiate a multicenter, collaborative program of applied population-based research related to diabetes, and to develop a knowledge base through published research in scientific literature and handbooks for professional associations that will improve the process, delivery, and outcome of diabetes services within managed-care settings. The knowledge base to be developed will address methods for and assessment of effectiveness, cost-effectiveness, generalizability, feasibility, and sustainability of interventions. Such a knowledge base may include a variety of activities covering the range of diabetes interventions, including diabetes screening and diagnosis; treatment approaches, glycemic control, CVD risk reduction, and screening for diabetes complications.

This program will improve the availability, accessibility, quality of process, effectiveness, cost-effectiveness, and health outcomes of diabetes-related services provided by managed-care health plans. The benefit of this program will be the establishment of new partnerships and relationships among managed-care health plans and between managed-care health plans and public health agencies. Thus, the challenges of improving diabetes control services may be collaboratively assessed in a manner to have a national public health impact. The other goals of this program will include provision of data for policy development, assessment, and capacity-building at the State and local levels with respect to managed care and the CDC Diabetes Control Program's ability to develop appropriate diabetes control policies and to conduct diabetes surveillance in a changing health environment.

Program Requirements

Work performed under this cooperative agreement will be the result of collaborative efforts among the funded Translational Research Centers and the Data Coordinating Center. Recipients will be responsible for implementing research methods and study design, analysis, use of data, and dissemination of results via peer-reviewed scientific publications or other related material.

In conducting activities to achieve the purpose of this program, the recipient will be responsible for the activities under A., below, and CDC will be responsible for carrying out the activities described under B., below.

A. Recipient Activities

1. Participate in the protocol development, data collection, quality control, final data analysis and interpretation, the preparation of publications, and presentation of findings.

2. Establish a Steering Committee that will be the primary governing body of the study and will be comprised of each of the Principal Investigators from the Translational Research Centers and the Data Coordinating Center. The Steering Committee will have primary responsibility for developing common study protocols, facilitating the conduct and monitoring of the studies, and reporting the study results.

3. Work cooperatively with the other Translational Centers, the Data Coordinating Center, and agree to follow the common protocol(s) and manual(s) of operations developed in Phase 1 of the study by the Steering Committee.

4. Transmit all relevant study data to a central Data Coordinating Center for data editing, formatting, combination, and primary analysis.

5. Collaborate with other health organizations, community groups, etc., as necessary to accomplish program activities.

6. Maintain an effective and adequate management and staffing plan. The success of the program will depend on recruiting and hiring staff in a timely manner. Staff should have the education, background, and experience to successfully conduct the activities proposed in this application.

B. CDC Activities

1. Support and stimulate the recipients' activities by collaborating and providing scientific and public health consultation and assistance in the development of activities related to the cooperative agreement. Consistent with this concept, the tasks and activities in carrying out the studies will be shared among the recipients and the CDC.

2. Establish a Data Coordinating Center that will serve as a resource for standardized assessment, analysis, reporting, and that will assist in the design and writing of study protocol(s) in collaboration with the Research Centers.

3. Assist in the coordination of activities between the Diabetes Translational Research Centers and the Data Coordinating Center.

4. Facilitate communication among recipients and assist in quality control, interim data monitoring, final data analysis and interpretation, and coordination and performance monitoring.

5. Serve as a consultant to the Steering Committee.

Technical Reporting Requirements

An original and two copies of the following reports must be submitted to the Grants Management Branch, CDC.

A. Semiannual progress reports are required of all cooperative agreement recipients. The first semiannual report is required with each year's noncompeting continuation application and should cover program activities from date of the previous report (or date of award for reporting in the first year of the project). The second semiannual report is due 30 days after the end of each budget period and should cover activities from the date of the previous report. Progress reports should address the status of all recipient activities above, including:

1. A comparison of actual accomplishments to the objectives established for the period.

2. The reasons for slippage if established goals were not met.

3. Other pertinent information essential to evaluating progress.

4. Data pertaining to various project activities.

B. A financial status report (FSR) is required no later than 90 days after the end of each budget period. The final financial status report is required no later than 90 days after the end of the project period. Please submit the original and two (2) copies of all reports to the Grants Management Branch, CDC.

Notification of Intent To Apply (Preapplication Letter)

To assist CDC in planning and executing the evaluation of applications submitted under this Program Announcement (98086), a nonbinding letter of intent-to-apply is requested from potential applicants. Although not a prerequisite of the application, the letter should be submitted to Bernice A. Moore, Epidemiology and Statistics Branch, Division of Diabetes Translation, National Center for Chronic Disease Prevention and Health Promotion, Centers for Disease Control and Prevention (CDC), Mailstop K–10, 4770 Buford Highway NE., Atlanta, GA 30341–3717, telephone (770) 488–5855; fax (770) 488–5966; or Internet or CDC WONDER E-mail at bamo@cdc.gov. It should be postmarked no later than one month before the planned submission deadline (due not later than July 15, 1998. The letter should identify the Program Announcement number, the

name and address of the applicant's institution, and telephone number of a contact person. The letter of intent does not influence review or funding decisions, but it will enable CDC to plan the review more efficiently.

Application Content

It is anticipated that applications for Diabetes Translational Research Centers within this initiative will focus on important aspects of the process and outcome of care for people with diabetes. Process of care may include diabetes screening and diagnosis; treatment approaches; glycemic control; cardiovascular disease (CVD) risks reduction; screening for diabetes complications; and outcome of care may include quality of life and avoidable morbidity and death among people with diabetes. In addition, the extent and causes of variation in implementation of accepted standards of diabetes care may be explored at three levels—individuals, healthcare providers, and health care delivery systems. Emphasis should be on identifying important and potentially modifiable factors that contribute to the failure to use recommended standards of diabetes care, and on designing and testing (using rigorous scientific approaches) cost-effective strategies aimed at achieving optimal care. Furthermore, in keeping with the philosophy of Translational Research, designs should emphasize intervention effectiveness which span diverse populations and a variety of healthcare approaches (e.g., type of managed care), leading to findings with high generalizability. Thus, good translational research will require multicenter participation and represent populations of diverse age, ethnicity, socioeconomic status, and severity of diabetes. Furthermore, strategies aimed at achieving optimal diabetes care should aim for generalizability, sustainability and cost-effectiveness.

Each applicant must propose the research questions and study designs that best address the objectives of this initiative and are most appropriate for their patient population. The outcome of this initiative should result in the following questions:

1. What are the current levels of care provided to people with diabetes, and how does it compare with the recommended standards of diabetes care (e.g., American Diabetes Association)?

2. What is the health-related quality of life for people with diabetes and what factors influence patient satisfaction and quality of life?

3. What are the major factors that influence the process, delivery, effectiveness, costs, and sustainability of interventions aimed at glycemic control, and conventional CVD risk factor (elevated blood pressure, dyslipidemia, smoking, overweight, physical inactivity) reduction among people with diabetes?

4. What are the major factors that influence the process, delivery, effectiveness, costs, and sustainability of interventions aimed at the early detection of microvascular complications of diabetes (e.g., retinopathy, nephropathy)?

Collaborative protocols to study the above questions will be developed by a Steering Committee composed of the recipients and the Principal Investigator of a Data Coordinating Center selected under a separate Request for Contract. The collaborative study protocol(s) will move into the implementation stage with the concurrence of the Steering Committee.

It is not the intent of this Program Announcement to solicit elaborately detailed research plans for the above proposed collaborative studies because the final protocols will be collaboratively developed by the investigators during the planning phase (Phase 1).

Specific Instructions

All applicants must develop their applications in accordance with PHS Form 5161–1 (Revised 5/96), information contained in this Program Announcement, and the format and page limitations that follow. Provide a clear and succinct description and supportive references regarding how each of the statements apply in your application:

1. Experience in one or more of the following areas: Health economics research, health services research, epidemiological research, or health information systems research.

2. Employs or can engage investigators in the fields of economics, health services research, or information systems research who have direct experience at establishing, working with, and researching diabetes-related topics, and with a corresponding record of substantial publication in the peer-reviewed scientific literature.

3. Ability and willingness to designate one experienced and published investigator as the project's principal investigator.

4. The principal investigator for this project has access to a population of at least 5,000 people with diabetes who are cared for within a managed-care setting, and has access to research infrastructure and to basic data necessary to carry out this project.

5. Describe the composition of the proposed study population (for example, addressing the inclusion of women and members of minority groups and their subpopulations in the section that will describe the research design). A copy of the CDC policy on Women, Racial and Ethnic Minorities is enclosed with the application kit for guidance.

6. Nonprofit organizations must document their status on application PHS Form 5161–1 (Revised 5/96), Part D of the Checklist.

Responses to the above may follow the Table of Contents in your application, but must appear as the first page(s) of the text of your application and be titled, Application Requirements. Eligibility characteristics must be clearly specified with appropriate documentation in the Application Requirements section of your application.

The application narrative must include the following sections in the order presented below:

A. Rationale for the research question(s) chosen to be addressed (not to exceed 1 page):

Describe the research question(s) chosen to be addressed and the rationale for this selection. Include an explanation of why this question is a priority for the investigator(s) and what types of interest, experience, or expertise the investigator(s) brings to the particular problem inherent in the chosen research question(s).

The extent to which the rationale for the chosen research question (1) is based on public health importance, (2) is based on the experience and expertise of the investigator(s), and (3) clearly communicates the anticipated value to the purpose of the Diabetes Translational Research Initiative.

B. Objectives of the research (not to exceed 4 pages):

Itemize the objectives and timelines of the research in relation to the chosen research question(s), and describe: (1) The extent to which the objectives of the chosen research question(s) are numerically measurable, specific, realistic, time-phased, and suitable for development into a collaborative, multicenter study protocol; the extent to which applicant presents a detailed operational plan for initiating and conducting the project that clearly and appropriately addresses all Recipient Activities; (2) the extent to which the applicant clearly identifies specific assigned responsibilities and time commitment of all key professional personnel; (3) the extent to which the plan clearly describes applicant's technical approach and methods for conducting the proposed studies and

extent to which the approach and methods are appropriate and adequate to accomplish the objectives; (4) the extent to which applicant describes collaboration with CDC and others during the various phases of the project and shows commitment to a multicenter, collaborative approach.

C. Design of the research (not to exceed 3 pages):

The extent to which the proposed methodology of the research is scientifically sound, realistic, appears likely to answer the chosen research question(s), and will produce generalizable findings; and, if appropriate, the degree to which the applicant has included women, racial and ethnic minority populations in the proposed research to include:

1. The proposed plan for the inclusion of both sexes and racial and ethnic minority populations for appropriate representations.

2. The proposed justification when representation is limited or absent.

3. A statement whether the design of the study is adequate to measure differences when warranted.

4. A statement whether the plans for recruitment and outreach for study participants include the process of establishing partnerships with community(ies) and recognition of mutual benefits.

D. Background and experience of the principal investigator, coinvestigators, and the applying institution, organization, or agency (not to exceed 3 pages):

Describe the educational and professional background of the principal investigator, and document the relevant experience of the principal investigator and qualifications of the applying institution, organization, or agency for carrying out health economics, health services, or information systems research. Specifically, emphasize the experience of the principal investigator in participating in collaborative, multicenter research projects, and describe the data sources that are available to the investigator. Describe the population and number of people with diabetes within the managed-care health plan, and provide details of the managed-care structure, organization, financing, and percentage of the Medicaid population under contract. Provide a brief description of how the project will be organized, and indicate the proposed staffing plan.

E. Access to a large number of people with diabetes (≤5000) cared for within managed care (not to exceed 2 pages):

Describe the extent to which (1) the population used in carrying out this research project is sufficiently typical of people with diabetes around the country or accurately represents special groups of people with the disease—so that a solution to the collaborative research question(s) will have the broadest possible application; (2) the principal investigators have sufficient access to well developed data sources and ability to use it for the purposes of carrying out this research project; and (3) if applicable, attach evidence of collaboration specifying the commitment of the parties involved and provide details, including the terms of access to data and to populations and any specified limits to collaboration for the purposes of this project.

F. Budget and budget justification (not to exceed 5 pages):

Provide a detailed, line-item budget with justification that demonstrates the request is consistent with the purpose and objectives of this program. The budget for Phase I of the study should be clearly delineated. Budgets should allow for approximately three persons, including the Principal Investigator, to attend Steering Committee and Subcommittee meetings. The detailed budget for Phase I should be estimated on the basis of monthly meetings during Phase 1.

G. Human Subjects:

Whether or not exempt from DHHS regulations, if the proposed project involves human subjects, describe (in an appendix) adequate procedures for the protection of human subjects. Also, ensure that women, and racial and ethnic minority populations are appropriately represented in applications for research involving human subjects.

Typing and Mailing

All pages must be clearly numbered and a complete index to the application and its appendixes must be included. Do not bind, staple, or paper clip any pages of any copy of the application, including appendixes. Do not include any bound documents (e.g., pamphlets or other publications) in the appendixes. Do not include cardboard, plastic, or other page separators between the sections. The entire application must be typewritten, single-spaced, and in unreduced type (12-point fonts) on 8½″ by 11″ white paper, with at least 1″ margins, including headers and footers, and printed on one side only.

Evaluation Criteria (Total 100 Points)

Applications will be reviewed and evaluated according to the following criteria:

A. Rationale for the Research Question(s) Chosen to be Addressed (15 points)

Describe the research question(s) chosen to be addressed and the rationale for this selection. Included in this should be an explanation of why this question is a priority for the investigator(s) and what types of interest, experience, or expertise the investigator(s) brings to the particular problem inherent in the chosen research question(s).

The extent to which the rationale for the chosen research question (1) is based on public health importance, (2) is based on the experience and expertise of the investigator(s), and (3) clearly communicates the anticipated value to the purpose of the Diabetes Translational Research Initiative.

B. Objectives of the Research (20 points).

(1) The extent to which the objectives of the chosen research question(s) are numerically measurable, specific, realistic, and time-phased, and suitable for development into a collaborative, multicenter study protocol. The extent to which the applicant presents a detailed operational plan for initiating and conducting the project that clearly and appropriately addresses all Recipient Activities; (2) the extent to which the applicant clearly identifies specific assigned responsibilities and time commitment of all key professional personnel; (3) the extent to which the plan clearly describes applicant's technical approach and methods for conducting the proposed studies and the extent to which the approach and methods are appropriate and adequate to accomplish the objectives; and (4) the extent to which applicant describes collaboration with other translation centers during the various phases of the project, and shows commitment to a multicenter, collaborative approach.

C. Design of the Research (20 points).

The extent to which the proposed methodology of the research is scientifically sound, realistic, appears likely to answer the chosen research question(s), and will produce generalizable findings; and, if appropriate, the degree to which the applicant has included women, racial and ethnic minority populations in the proposed research to include:

1. The proposed plan for the inclusion of both sexes and racial and ethnic minority populations for appropriate representations.

2. The proposed justification when representation is limited or absent.

3. A statement whether the design of the study is adequate to measure differences when warranted.

4. A statement whether the plans for recruitment and outreach for study participants include the process of

establishing partnerships with community(ies) and recognition of mutual benefits.

D. Background and Experience of the Principal Investigator and of the Applying Institution, Organization, or Agency (20 points).

Describe the educational and professional background of the principal investigator, and document the relevant experience of the principal investigator and qualifications of the applying institution, organization, or agency for carrying out health economics, health services, or information systems research. Specifically, emphasize the experience of the principal investigator in participating in collaborative, multicenter research projects, and describe the data sources that are available to the investigator. Describe the population and number of people with diabetes within the managed-care health plan, and provide details of the managed-care structure, organization, financing, and percentage of Medicaid population under contract. Provide a brief description of how the project will be organized and indicate the proposed staffing plan.

E. Access to a large Number of people with diabetes (≤5000) cared for within managed care (25 points).

Describe the extent to which (1) the population used in carrying out this research project is sufficiently typical of people with diabetes around the country or accurately represents special groups of people with the disease—so that a solution to the collaborative research question(s) will have the broadest possible application; (2) the principal investigator has sufficient access to well developed data sources and ability to use it for the purposes of carrying out this research project; and (3) if applicable, attach evidence of collaboration specifying the commitment of the parties involved and provide, including the terms of access to data and to populations any specified limits to collaboration for the purposes of this project.

F. Budget and Budget Justification (Not Weighted).

The extent to which the budget is reasonable and consistent with the purpose and objectives of this program.

G. Human Subjects (Not Weighted).

If the proposed project involves human subjects, whether or not exempt from the Department of Health and Human Services (DHSS) regulations, the extent to which adequate procedures are described for the protection of human subjects. Note: Objective Review Panel recommendations on the adequacy of protections include: (1) Protections appear adequate and there are no comments to make or concerns to raise; (2) protections appear inadequate and the Review Panel has concerns related to human subjects; (3) disapproval of the application is recommended because the research risks are sufficiently serious and protection against the risks are inadequate as to make the entire application unacceptable, and (4) protections appear adequate that women, racial and ethnic minority populations are appropriately represented in applications involving human research.

Content of Noncompeting Continuation Applications

Submitted within the project period need only include:

A. A brief progress report that describes the accomplishments of the previous semi-annual period. This report will be in lieu of the semi-annual progress report.

B. Any new or significantly revised items or information (objectives, scope of activities, operational methods, evaluation, key personnel, work plans, etc.) not included in year 01 or subsequent continuation applications.

C. An annual budget and justification. Existing budget items that are unchanged from the previous budget period do not need rejustification. Simply list the items in the budget and indicate that they are continuation items.

Executive Order 12372 Review

Applications are subject to Intergovernmental Review of Federal Programs as governed by Executive Order (E.O.) 12372, which sets up a system for State and local government review of proposed Federal assistance applications. Applicants should contact their State Single Point of Contact (SPOC) as early as possible to alert them to the prospective applications and receive any necessary instructions on the State process. For proposed projects serving more than one State, the applicant is advised to contact the SPOC for each affected State. The application kit includes a current list of SPOCs. If the SPOCs have any State process recommendations on applications submitted to CDC, they should send them to Sharron P. Orum, Grants Management Officer, Grants Management Branch, Procurement and Grants Office, Centers for Disease Control and Prevention (CDC), Mailstop E–18, Room 305, 255 East Paces Ferry Road, NE., Atlanta, GA 30305, no later than 30 days after the application due date (a waiver has been requested). Please include the Program Announcement Number and Program Title on the letter. The granting agency does not guarantee to ''accommodate or explain'' for State or tribal process recommendations it receives after that date.

Public Health System Reporting Requirement

This program is subject to the Public Health System Reporting Requirements. Under these requirements, all community-based nongovernmental applicants must prepare and submit the items identified below to the head of the appropriate State or local health agency(s) in the program area(s) that may be impacted by the proposed project no later than the receipt date of the Federal application. The appropriate State or local health agency is determined by the applicant. The following information must be provided:

A. A copy of the face page of the application (SF 424).

B. A summary of the project that should be titled ''Public Health System Impact Statement'' (PHSIS), not to exceed one page, and should include the following:

1. A description of the population to be served.

2. A summary of the services to be provided.

3. A description of the coordination plans with the appropriate State or local health agencies.

If the State and/or local health official desires a copy of the entire application, it may be obtained from the State Single Point of Contact (SPOC) or directly from the applicant.

Catalog of Federal Domestic Assistance Number

The Catalog of Federal Domestic Assistance number is 93.988.

Other Requirements

Paperwork Reduction Act

Projects that involve the collection of information from 10 or more individuals and funded by this cooperative agreement will be subject to review by the Office of Management and Budget (OMB) under the Paperwork Reduction Act.

Human Subjects

If the proposed project involves research on human subjects, the applicant must comply with the Department of Health and Human Services Regulations, 45 CFR part 46, regarding the protection of human subjects. Assurance must be provided to demonstrate that the project will be subject to initial and continuing review by an appropriate institutional review

committee. The applicant will be responsible for providing assurance in accordance with the appropriate guidelines and forms provided in the application kit. Should human subjects reviews be required, the proposed word play should incorporate timelines for such development and review activities.

Women, Racial, and Ethnic Minorities Policy

It is the policy of the CDC to ensure that women and racial and ethnic groups will be included in CDC-supported research projects involving human subjects, whenever feasible and appropriate. Racial and ethnic groups are those defined in OMB Directive No. 15 and include American Indian or Alaskan Native, Asian, Black or African American, Native Hawaiian or Other Pacific Islander, and Hispanic or Latino. Applicants shall ensure that women and racial and ethnic minority populations are appropriately represented in applications for research involving human subjects. Where clear and compelling rationale exist that inclusion is not feasible, this situation must be explained as part of the application. In conducting the review of applications for scientific merit, review groups will evaluate proposed plans for inclusion of minorities and both sexes as part of the scientific assessment and assigned score. This policy does not apply to research studies when the investigator cannot control the race, ethnicity and/or sex of subjects. Further guidance to this policy is contained in the **Federal Register**, Vol. 60, No. 179, Friday, September 15, 1995, pages 47947–47951.

Confidentiality

Any personal identifying information obtained in connection with the delivery of services provided to any individual under any program that is being carried out with a cooperative agreement made under this Program Announcement shall not be disclosed unless required by a law of a State or political subdivision or unless such an individual provides written, voluntary informed consent.

Application Submission and Deadline

The application must be carefully completed, following the directions provided in this Program Announcement. An original and two copies of the application PHS Form 5161–1 (Revised 5/96) must be submitted to Sharron P. Orum, Grants Management Officer, Procurement and Grants Office, Centers for Disease Control and Prevention, (CDC), 255 East Paces Ferry Road, NE., Mailstop E–18, Atlanta, GA 30305–2209, on or before August 14, 1998.

1. Deadline: Applications shall be considered as meeting the deadline if they are either:

a. Received on or before the deadline date; or

b. Sent on or before the deadline date and received in time for submission to the objective review group. (Applicants must request a legibly dated U.S. Postal Service postmark or obtain a legibly dated receipt from a commercial carrier or U.S. Postal Service. Private metered postmarks shall not be acceptable as proof of timely mailing.)

2. Late Applications: Applications that do not meet the criteria in 1.a. and 1.b. above are considered late applications. Late applications will not be considered in the current competition and will be returned to the applicant.

Where To Obtain Additional Information

A complete program description and information on application procedures are contained in the application package. Business management technical assistance may be obtained from Locke Thompson, Grants Management Specialist, Grants Management Branch, Procurement and Grants Office, Centers for Disease Control and Prevention (CDC), 255 East Paces Ferry Road, NE., Room 300, Mailstop E–18, Atlanta, GA 30305–2209, telephone (404) 842–6595; fax (404) 842–6513; or Internet or CDC WONDER E-mail at <lxt1@.cdc.gov>. Programmatic technical assistance may be obtained from Bernice A. Moore, Epidemiology and Statistics Branch, Division of Diabetes Translation, National Center for Chronic Disease Prevention and Health Promotion, Centers for Disease Control and Prevention (CDC), Mailstop K–10, 4770 Buford Highway NE., Atlanta, GA 30341–3701, telephone (770) 488–5855; fax (770) 488–5966; or Internet or CDC WONDER E-mail at <bamo@cdc.gov>.

To receive additional written information and to request an application kit, call 1–888–GRANTS4 (1–888–472–6874). You will be asked to leave your name and address and will be instructed to identify the Announcement number of interest.

Please refer to Announcement Number 98086 when requesting information and submitting an application.

You may obtain this and other CDC Announcements from one of two Internet sites on the actual publication date: CDC's homepage at http://www.cdc.gov or at the Government Printing Office homepage (including free on-line access to the **Federal Register** at http://www.access.gpo.gov.

Potential applicants may obtain a copy of *Healthy People 2000* (Full Report, Stock No. 017–001–00474–0) or *Healthy People 2000* (Summary Report, Stock No. 017–001–00473–1) referenced in the Introduction through the Superintendent of Documents, Government Printing Office, Washington, DC 20402–9325; telephone 202–512–1800.

Dated: June 22, 1998.

John L. Williams,

Director, Procurement and Grants Office, Centers for Disease Control and Prevention (CDC).

[FR Doc. 98–17202 Filed 6–26–98; 8:45 am]

BILLING CODE 4163–18–U

DEPARTMENT OF HEALTH AND HUMAN SERVICES

Centers for Disease Control and Prevention

The National Center for Infectious Diseases (NCID), Hepatitis Branch of the Centers for Disease Control and Prevention (CDC) Announces the Following Meeting

Name: Consultants Meeting on the Prevention and Control of Hepatitis C Virus (HCV) Infection.

Times and Dates: 6 p.m.–9:30 p.m., July 15, 1998. 8 a.m.-5 p.m., July 16, 1998. 8 a.m.–12 p.m., July 17, 1998.

Place: Atlanta Marriott Marquis Hotel, 265 Peachtree Center Avenue, Atlanta, Georgia 30303.

Status: Open to the public, limited only by the space available. Registration is required.

Purpose: The purpose of this working meeting is to review and discuss draft recommendations that will serve as a resource to individuals and organizations involved in evaluating persons for HCV infection, and are based on currently available knowledge.

Matters To Be Discussed: Participants will discuss recommendations for identifying persons at risk for HCV infection and the appropriate counseling and testing of these persons. Participants will also discuss recommendations to guide appropriate medical referral of HCV infected persons. The agenda will include an overview of HCV public health strategies; and sessions on (a) screening; (b) counseling and referral; and (c) implementation.

The participants will include representatives from public, private, voluntary and non-governmental organizations.

Agenda items are subject to change as priorities dictate.

Written comments are welcome and should be received by the contact person listed below prior to the opening of the meeting.

Contact Person for More Information: Wesley Hodgson, Hepatitis Branch, NCID, CDC, M/S G–37, 1600 Clifton Road, NE, Atlanta, Georgia 30333, telephone 404/639–3048, fax 404/639–1538, e-mail wxh9@cdc.gov.

Dated: June 23, 1998.

Carolyn J. Russell,

Director, Management Analysis and Services Office, Centers for Disease Control and Prevention (CDC).

[FR Doc. 98–17203 Filed 6–26–98; 8:45 am]

BILLING CODE 4163–18–P

DEPARTMENT OF HEALTH AND HUMAN SERVICES

Food and Drug Administration

Antiviral Drugs Advisory Committee; Notice of Meeting

AGENCY: Food and Drug Administration, HHS.

ACTION: Notice.

This notice announces a forthcoming meeting of a public advisory committee of the Food and Drug Administration (FDA). At least one portion of the meeting will be closed to the public.

Name of Committee: Antiviral Drugs Advisory Committee.

General Function of the Committee: To provide advice and recommendations to the agency on FDA's regulatory issues.

Date and Time: The meeting will be held on July 14 and 15, 1998, from 8:30 a.m. to 5 p.m.

Location: Bethesda Holiday Inn, Versailles Ballrooms I and II, 8120 Wisconsin Ave., Bethesda, MD.

Contact Person: Rhonda W. Stover, or John B. Schupp, Center for Drug Evaluation and Research (HFD–21), Food and Drug Administration, 5600 Fishers Lane, Rockville, MD 20857, 301–827–7001, or FDA Advisory Committee Information Line, 1–800–741–8138 (301–443–0572 in the Washington, DC area), code 12531. Please call the Information Line for up-to-date information on this meeting.

Agenda: On July 14, 1998, the committee will hear presentations concerning general regulatory issues from the Division of Antiviral Drug Products.

Procedure: On July 14, 1998, from 8:30 a.m. to 1 p.m. the meeting is open to the public. Interested persons may present data, information, or views, orally or in writing, on issues pending before the committee. Written submissions may be made to the contact person by July 6, 1998. Oral presentations from the public will be scheduled between approximately 11 a.m. and 12 m. on July 14, 1998. Time allotted for each presentation may be limited. Those desiring to make formal oral presentations should notify the contact person before July 6, 1998, and submit a brief statement of the general nature of the evidence or arguments they wish to present, the names and addresses of proposed participants, and an indication of the approximate time requested to make their presentation.

Closed Committee Deliberations: On July 14, 1998, from 1 p.m to 5 p.m., and on July 15 from 8:30 a.m. to 5 p.m., the meeting will be closed to permit discussion and review of trade secret and/or confidential commercial information (5 U.S.C. 552b(c)(4)). The meeting will discuss information relevant to pending investigational new drug applications and drug development plans.

Notice of this meeting is given under the Federal Advisory Committee Act (5 U.S.C., app. 2).

Dated: June 22, 1998.

Michael A. Friedman,

Deputy Commissioner for Operations.

[FR Doc. 98–17212 Filed 6-26-98; 8:45 am]

BILLING CODE 4160–01–F

DEPARTMENT OF HEALTH AND HUMAN SERVICES

Food and Drug Administration

Biological Response Modifiers Advisory Committee; Notice of Meeting

AGENCY: Food and Drug Administration, HHS.

ACTION: Notice.

This notice announces a forthcoming meeting of a public advisory committee of the Food and Drug Administration (FDA). At least one portion of the meeting will be closed to the public.

Name of Committee: Biological Response Modifiers Advisory Committee.

General Function of the Committee: To provide advice and recommendations to the agency on FDA's regulatory issues.

Date and Time: The meeting will be held on July 30, 1998, 8 a.m. to 6 p.m.

Location: Bethesda Holiday Inn, Versailles Ballrooms I and II, 8120 Wisconsin Ave., Bethesda, MD.

Contact Person: Gail M. Dapolito or Rosanna L. Harvey, Center for Biologics Evaluation and Research (HFM–211), Food and Drug Administration, 1401 Rockville Pike, Rockville, MD 20852, 301–827–0314, or FDA Advisory Committee Information Line, 1–800–741–8138 (301–443–0572 in the Washington, DC area), code 12389. Please call the Information Line for up-to-date information on this meeting.

Agenda: The committee will discuss: (1) Biologics license application 97–0509, Amgen Inc.'s Stemgen® (ancestim); (2) the report from the December 17, 1997, meeting of the Xenotransplantation Subcommittee; and (3) the research programs in the Laboratory of Immunology and the Laboratory of Molecular Immunology, Office of Therapeutics Research and Review, Center for Biologics Evaluation and Research. An indication is sought, in combination with Neupogen® (filgrastim), for use in mobilization of peripheral blood progenitor cells.

Procedure: On July 30, 1998, from 8 a.m. to 5 p.m., the meeting is open to the public. Interested persons may present data, information, or views, orally or in writing, on issues pending before the committee. Written submissions may be made to the contact person by July 20, 1998. Oral presentations from the public will be scheduled between approximately 8 a.m. and 9 a.m. Time allotted for each presentation may be limited. Those desiring to make formal oral presentations should notify the contact person before July 20, 1998, and submit a brief statement of the general nature of the evidence or arguments they wish to present, the names and addresses of proposed participants, and an indication of the approximate time requested to make their presentation.

Closed Committee Deliberations. On July 30, 1998, from 5 p.m. to 6 p.m., the meeting will be closed to permit discussion where disclosure would constitute a clearly unwarranted invasion of personal privacy (5 U.S.C. 552b(c)(6)). The committee will discuss confidential information relevant to the scientific site visit report of the Laboratory of Immunology and the Laboratory of Molecular Immunology, Office of Therapeutics Research and Review, Center for Biologics Evaluation and Research.

Notice of this meeting is given under the Federal Advisory Committee Act (5 U.S.C. app. 2).

Dated: June 18, 1998.

Michael A. Friedman,

Deputy Commissioner for Operations.

[FR Doc. 98–17146 Filed 6-26-98; 8:45 am]

BILLING CODE 4160–01–F

DEPARTMENT OF HEALTH AND HUMAN SERVICES

Health Care Financing Administration

[Document Identifier: HCFA–R–227]

Agency Information Collection Activities: Submission for OMB Review; Comment Request

AGENCY: Health Care Financing Administration, HHS.

In compliance with the requirement of section 3506(c)(2)(A) of the Paperwork Reduction Act of 1995, the Health Care Financing Administration (HCFA), Department of Health and Human Services, is publishing the following summary of proposed collections for public comment. Interested persons are invited to send comments regarding this burden estimate or any other aspect of this collection of information, including any of the following subjects: (1) The necessity and utility of the proposed information collection for the proper performance of the agency's functions; (2) the accuracy of the estimated burden; (3) ways to enhance the quality, utility, and clarity of the information to be collected; and (4) the use of automated collection techniques or other forms of information technology to minimize the information collection burden.

Type of Information Collection Request: Extension of a currently approved collection; *Title of Information Collection:* Research and Analytic Support for Implementing Performance Measurement in Medicare Fee for Service; *Form No.:* HCFA-R–227 (OMB# 0938–0718); *Use:* As required by the Balanced Budget Act (BBA), Section 1851(d), the Health Care Financing Administration (HCFA) needs to develop comparable performance measures for Fee For Service (FFS) Medicare. This project will enable HCFA to evaluate the effectiveness and outcomes of FFS services purchased. HCFA may potentially disseminate this information to Medicare beneficiaries so that they may make informed health care choices; *Frequency:* Biennially; *Affected Public:* Individuals or Households, Business or other for-profit, Not-for-profit institutions, Farms, Federal Government, and State, Local or Tribal Government; *Number of Respondents:* 6,670; *Total Annual Responses:* 6,670; *Total Annual Hours:* 2,223.

To obtain copies of the supporting statement and any related forms for the proposed paperwork collections referenced above, access HCFA's Web Site address at http://www.hcfa.gov/regs/prdact95.htm, or E-mail your request, including your address, phone number, OMB number, and HCFA document identifier, to Paperwork@hcfa.gov, or call the Reports Clearance Office on (410) 786–1326. Written comments and recommendations for the proposed information collections must be mailed within 30 days of this notice directly to the OMB desk officer: OMB Human Resources and Housing Branch, Attention: Allison Eydt, New Executive Office Building, Room 10235, Washington, DC 20503.

Dated: June 22, 1998.

John P. Burke III,

HCFA Reports Clearance Officer, HCFA Office of Information Services, Security and Standards Group, Division of HCFA Enterprise Standards.

[FR Doc. 98–17154 Filed 6–26–98; 8:45 am]

BILLING CODE 4120–03–P

DEPARTMENT OF HEALTH AND HUMAN SERVICES

Health Resources and Services Administration

Notice Regarding Section 602 of the Veterans Health Care Act of 1992—Rebate Option

AGENCY: Health Resources and Services Administration, HHS.

ACTION: Final notice.

SUMMARY: Section 602 of Pub. L. 102–585, the ''Veterans Health Care Act of 1992,'' enacted section 340B of the Public Health Service (PHS) Act, ''Limitation on Prices of Drugs Purchased by Covered Entities.'' Section 340B provides that a manufacturer who sells covered outpatient drugs to eligible entities must sign a pharmaceutical pricing agreement with the Secretary of HHS in which the manufacturer agrees to charge a price for covered outpatient drugs that will not exceed that amount determined under a statutory formula.

The purpose of this notice is to inform interested parties of the final guidelines recognizing a rebate option for State AIDS Drug Assistance Programs (ADAPs) receiving funds under Title XXVI of the PHS Act as an optional alternate means of accessing section 340B discount pricing.

EFFECTIVE DATE: July 29, 1998.

FOR FURTHER INFORMATION CONTACT: Robert Staley, R. Ph., Senior Program Manager, Office of Drug Pricing, Bureau of Primary Health Care, Health Resources and Services Administration, 4350 East-West Highway, Bethesda, MD 20814, Phone (301) 594–4353; Fax (301) 594–4982.

SUPPLEMENTARY INFORMATION:

(A) Background

The proposed guidelines, recognizing a rebate option for State AIDS Drug Assistance Programs (ADAPs), were announced in the **Federal Register** at 62 FR 45823 on August 29, 1997. A period of 30 days was established to allow interested parties to submit comments. The Department received comments from eleven sources including State AIDS Drug Assistance Programs, pharmaceutical manufacturers, and organizations representing pharmaceutical manufacturers or covered entities. Ten commenters supported the proposed guideline. There were no comments strongly in opposition to the recognition of an ADAP rebate option. The following section presents a summary of all major comments, grouped by subject, and a response to each comment. All comments were considered in developing these final guidelines. The rebate option is adopted with several modifications based upon these comments.

(B) Comments and Responses

Standardization of Systems

Comment: It is hoped that the guideline will ensure a rebate process similar to the Medicaid model and voluntary systems currently utilized by most drug companies in that such standardization will ensure a more efficient rebate system.

Response: The **Federal Register** notice requested comments only on the recognition of a rebate option and did not propose a specific mechanism for accessing such rebates. State ADAPs and manufacturers are encouraged to follow standard business practices in designing the contracts and agreements for such a rebate mechanism. The voluntary rebate agreements and the Medicaid rebate program may be used as models for development of the ADAP rebate agreements. The process for claim submission and payment is expected to be similar. The stipulations found in 59 FR 25113, May 13, 1994, section XI, entitled ''Manufacturer's Contracts Requiring Entity Compliance'' are also deemed to be applicable in that a manufacturer may not condition a rebate contract or agreement upon an entities' compliance with the provisions of section 340B. Manufacturer stipulated requirements for participation in the manufacturer designed voluntary rebate agreements, if predicated on section 340B compliance,

should be renegotiated for the section 340B rebate agreements.

Comment: Guidelines should allow State ADAPs with negotiated voluntary rebate agreements to continue to provide utilization data according to the terms of existing agreements.

Response: Voluntary rebate agreements with covered entities that provide at least the minimum statutory discount and do not contain requirements inconsistent with section 340B and published program guidelines will be considered consistent with the section 340B rebate program. State ADAPs may not need to negotiate new agreements if these conditions are met, and the ADAP or the manufacturer does not desire a new agreement. ADAPs may continue to provide utilization data according to terms of existing agreements if so desired.

Comment: Unlike the Medicaid rebate program, the proposed rebate program lacks specificity regarding program provisions and safeguards. It is critical that standardized contracts that provide for efficient and accountable procedures, systems, and data reporting formats be defined and implemented in conjunction with the program. The purpose of these provisions would be to protect the integrity of the program by safeguarding against errors, misunderstanding, and the potential for duplicate discounts and rebates.

Response: This notice only recognizes an ADAP rebate option and does not provide in-depth implementation strategies. Standard business practices should be utilized by State ADAPs and manufacturers. The mechanisms developed and used in the Medicaid rebate program and the current voluntary rebate programs (consistent with the requirements of section 340B and program guidelines) are models to be emulated. Of course, a 340B discount and a Medicaid rebate on the same covered drug are prohibited by section 340B.

Comment: The HRSA draft guidance does not address the mechanics of communication between an ADAP and a manufacturer about drugs reimbursed by the ADAP for which it claims a rebate from a manufacturer. It is recommended that HRSA consider requiring the ADAPs to use the claim form that State Medicaid programs use in submitting rebate requests to manufacturers.

Response: The **Federal Register** notice did not address the mechanics of the rebate process. However, ADAPs are encouraged to use Medicaid claim form HCFA–R–144 as a model for two reasons. First, this form can be considered a standard business practice model. Second, manufacturers should find it advantageous to receive rebate claims from State ADAPs in a similar form and format to that received from the State Medicaid programs.

Diversion and Duplicate Discounts

Comment: The State ADAP and the manufacturer are able to avoid the problems of diversion and double discounting if both the ADAP and the manufacturer have reached an understanding concerning the arrangements the ADAP has made to meet its statutory obligations (to avoid diversion and claims resulting in a duplicate discount).

Response: Guidelines have been issued to minimize the potential for duplicate discounting and covered drug diversion (59 FR 25110, May 13, 1994), and manufacturers have available to them auditing and dispute resolution remedies if they believe that duplicate discounting or covered drug diversion has occurred (61 FR 65406, December 12, 1996). In addition, manufacturers and covered entities are referred to 59 FR 25113 for a reminder that ''a manufacturer may not condition the offer of statutory discounts upon an entity's assurance of compliance with section 340B provisions.''

Comment: It would be difficult to administer a rebate program in which a given State ADAP used both the discount option and the rebate option. HRSA should clarify the policy that the rebate option is an ''alternate to'' the direct discount mechanism and the choice of a single mechanism should be made by each State ADAP. We urge that HRSA clarify that the ADAP rebate is available only for those drugs not purchased at the PHS (section 340B) discount. Additionally it is recommended that HRSA maintain a list of which option has been selected by each ADAP.

Response: The State ADAP 340B rebate option is an alternate method of accessing 340B pricing developed by HRSA in response to a clear need by certain State ADAPs which are unable to access such pricing through the direct discount option. We anticipate that these State ADAPs will promptly begin accessing 340B pricing using this rebate option. However, in States which have decentralized drug purchasing, there is the possibility that some decentralized ADAP components may elect to access pricing through a rebate mechanism while other ADAP components may develop systems to access a direct discount. States with decentralized drug purchasing are encouraged to centralize drug reimbursement mechanisms, so that from this central location, they can effectively maintain the necessary records to document appropriate drug reimbursement activity for the entire State. Using this drug reimbursement documentation, the central ADAP can then monitor reimbursement activity and prevent any duplicate rebate/discount on the same drug. In addition, the centralized ADAP can request appropriate rebates from the manufacturers in a more efficient and reliable manner. A State ADAP participating in the State ADAP section 340B rebate program will be listed as a covered entity, Entity Type ''RWIIR.''

Comment: Under a decentralized system, it may be difficult to assure that duplicate discounts will not occur on drugs provided to Medicaid patients. At any rate, coordination between the ADAPs and State Medicaid agencies will be required.

Response: Section 340B(a)(5)(A) prohibits a covered entity's request for a discount on a drug subject to an agreement under section 340B if the drug is subject to the payment of a rebate under Medicaid. This requirement applies whether the State ADAP uses a decentralized system or a centralized system. The mechanism to prevent a duplicate discount was published in the **Federal Register** on May 7, 1993 (58 FR 27293). This mechanism was developed in consultation with HCFA. In order to avoid a duplicate discount, the State ADAP must refrain from billing the State Medicaid agency unless the manufacturer's 340B rebate (either estimated or actually paid) is deducted from the price paid by the ADAP. This will help ensure that the State ADAP will only bill the State Medicaid agency at the actual acquisition cost plus a reasonable dispensing fee established by the State Medicaid agency. If the manufacturer's rebate is different from the estimated amount, the amounts billed to the State Medicaid agency will need to be reconciled.

Manufacturer Participation

Comment: All pharmaceutical manufacturers whose products are on any State ADAP formulary should be mandated to participate in the 340B rebate program.

Response: Only those manufacturers that have signed the section 340B Pharmaceutical Pricing Agreement (PPA) with HHS must honor appropriate section 340B rebate requests from covered entities. The rebate option is a component of the section 340B program specific to State ADAPs; therefore, manufacturers, receiving an appropriate rebate claim from a covered entity listed on the Electronic Data Retrieval System

(EDRS) as a State ADAP participating in the section 340B rebate program, are required to provide a rebate that meets or exceeds the 340B discount. Manufacturers who do not provide a rebate will be considered out of compliance with the PPA.

Technical Comments and Contractual Agreements

Comment: The notice does not detail the way in which State ADAPs would or should invoice manufacturers for rebates. For example, there are no statements on determination of actual units utilized during a specific period of time or a statement as to the time frame in which an ADAP must submit invoices.

Response: Standard business practices should be utilized. A manufacturer and a State ADAP are encouraged to specify in a contract or agreement the units and required time frame for claim data reporting. Unit definitions for reporting and report periods similar to those used in the Medicaid agreements and voluntary rebate agreements and contracts are considered standard business practices and thus acceptable. A standard State ADAP section 340B rebate claim submission and processing guideline was not specified so as to allow maximum flexibility between a State ADAP and manufacturers in the development of contracts and agreements.

Comment: There is no explicit audit provision in place to assure that the amount of units claimed for rebates coincides with the actual units of product dispensed. In addition, there is no specific procedure referenced for dispute resolution when a manufacturer disagrees with the amount invoiced from a State ADAP.

Response: Sections 340B(a)(5)(A) and (B) prohibit a 340B discount and a Medicaid rebate on the same drug and the resale or transfer of a 340B discounted drug to an individual who is not a patient of the covered entity. The manufacturer audit guidelines and the informal dispute resolution process guidelines (61 FR 65406–65412, December 12, 1996) allow manufacturers to audit covered entities pursuant to guidelines and dispute, among other issues, certain covered entity claims (e.g., rebates for covered drugs given to individuals who are not patients of the covered entity).

Comment: Manufacturers must have the freedom to enter into contractual agreements with individual State ADAP programs to address potential problems.

Response: Manufacturers and State ADAPs are able to enter into contractual agreements that address potential problems and mutually acceptable solutions.

Comment: A comprehensive and enforceable contract between the State ADAP program and the manufacturer should be developed through a public comment process and implemented prior to the establishment of the proposed new rebate mechanism. Specific elements that should be incorporated in any such agreement include: drug National Drug Code (NDC); prescription number; date reimbursed; quantity; unit type; amount reimbursed to the pharmacy; and dispensing pharmacy name, city, and state. Absent these provisions, the guidelines and principles proposed in the notice are not sufficient to ensure that the rebate option can operate equitably and efficiently.

Response: Requiring a ''comprehensive and enforceable contract'' would delay State ADAP participation in the 340B rebate program. HRSA wishes to allow maximum flexibility between each manufacturer and State ADAP in reaching such agreements.

Pharmacy specific data (prescription number, date of reimbursement, and similar data elements) are not reported on the initial Medicaid utilization submission and are not considered the standard for initial claim submission. HRSA encourages manufacturers to accept aggregate data (similar to Medicaid form HCFA–R–144) in the initial claim form. HRSA encourages State ADAPs to consider that the more detailed and accurate the initial claim data, the less likelihood a claim will be questioned or disputed.

Comment: We recommend that HRSA establish a specific date, such as 60 days after HRSA issues its guidance in final form, after which drugs reimbursed by an ADAP would be eligible for a rebate from a manufacturer with which the ADAP has entered into a rebate agreement.

Response: The effective date for the inception of the State ADAP 340B rebate program will be 30 days after the date of publication of this final notice. A State ADAP will not be considered a covered entity participating in the 340B rebate program until it is listed on the ODP Electronic Data Retrieval System (EDRS). At maximum, a period of one hundred and twenty days may elapse between publication of this final guideline and the next quarterly update of the EDRS. State ADAPs listed on the first quarterly EDRS update after the publication of this final notice may submit claims for covered drugs that were purchased 30 days after the date of final notice publication and thereafter. State ADAPs listed on a later EDRS update may claim rebates only on purchases made after their effective date of listing on the EDRS. ADAPs may need time to work closely with their State Medicaid programs to develop procedures to prevent duplicate discounting. Some ADAPs may find it necessary to improve record keeping and data tracking systems.

Comment: We recommend that HRSA establish a time period within which claims may be submitted for a manufacturer rebate. A fixed filing deadline will help avoid disputes and the Medicaid model may provide an analogy wherein Medicaid providers have one year in which to submit claims for reimbursement to state Medicaid programs. The benefit of a uniform expectation about the finality of payments and disputes for a given period may outweigh any concerns about HRSA imposing requirements on ADAPs.

Response: HRSA agrees that a maximum time period for submission of claims of one year appears to be within the range of standard business practices. However, a specific guideline for data claim submission and processing for rebates is not included in this guideline.

Comment: We urge HRSA to adopt requirements that manufacturer rebates paid to a State ADAP expand the care provided by the ADAP.

Response: Although section 340B does not discuss an appropriate use for 340B drug purchasing savings, the legislative history provides that section 340B was enacted to permit scarce Federal dollars to reach more eligible patients and provide more comprehensive services. *See* H.R. Rep. No. 102–348, 102d Cong., 2d Sess., pt 2, at 16 (1992).

Expansion of the Rebate Option to Additional Covered Entities

Comment: The characteristics of State ADAPs and their components make them more like State-run pharmaceutical benefit programs. The commitment of the States to assume responsibility for rebate contracting and administration has been essential to making the voluntary rebate program manageable. Our (favorable) response to the recognition of a rebate program for the ADAPs would be different if HRSA proposed a rebate program for all covered entities. Accordingly, we urge that the rebate mechanism be an option only for meeting the unique needs of the State ADAP programs and that HRSA not consider any further expansion to other categories of entities.

Response: At this time, we agree. This notice only recognizes a rebate option

for the State AIDS Drug Assistance Programs that receive assistance under Title XXVI of the PHS Act.

(C) The State ADAP Section 340B Rebate Option

In light of the comments and responses set forth above, the guideline for the state ADAP 340B rebate option is as follows: HRSA recognizes rebates obtained by the State ADAPs or their components that equal or exceed the 340B discount provided by the statutory ceiling price as a method of participating in the 340B program, subject to compliance with other requirements for participation. Standard business practices, such as those reflected in the Medicaid Rebate Program and current voluntary manufacturer rebate programs (consistent with the requirements of section 340B and all program guidance published in the **Federal Register**) are appropriate for the development of rebate contracts and agreements between State ADAPs and manufacturers. State ADAPs or their components and manufacturers wishing technical assistance in developing a rebate program and rebate agreements should contact HRSA's Office of Drug Pricing at (301) 594–4353 or (800) 628–6297.

State ADAPs or their components determined to be eligible for participation in the State ADAP 340B rebate program will be listed on the Office of Drug Pricing (ODP) Electronic Data Retrieval System (EDRS) on the first quarterly update of the EDRS which occurs 30 days following the effective date of this **Federal Register** notice. State ADAPs or their components listed on this update may submit rebate claims to participating manufacturers for covered drugs that are purchased starting 30 days after the date of this final notice publication. State ADAPs or their components listed on a later EDRS update may claim rebates only on purchases made after their effective date of listing on the EDRS.

Section 340B(a)(5)(A) reflects Congressional recognition that there is a potential for a covered drug purchased by a covered entity at the 340B discount price to be subject to a Medicaid rebate, if the drug is reimbursed by the Medicaid program. All program guidance regarding the prevention of such duplicate discounting must be followed by ADAPs participating in the rebate program as well as those participating in the discount program. Guidance regarding billing State Medicaid Agencies at actual acquisition cost plus a dispensing fee (established by the State Medicaid agency) and the prevention of duplicate discounting was published in the **Federal Register** on May 7, 1993 (58 FR 27293) entitled ''Duplicate Discounts and Rebates on Drug Purchases.'' Further guidance was published in the **Federal Register** on May 13, 1994 (59 FR 25112). State ADAPs may find it necessary to work with State Medicaid Agencies to adapt these guidelines to meet the unique circumstances of each individual State, such as provisions permitting retroactive reimbursement of drug purchases while Medicaid eligibility was pending.

The HRSA is sensitive to concerns about diversion of covered drugs to individuals who are not patients of the covered entities. Guidelines have been issued to minimize this potential, and manufacturers have available to them specified remedies if they believe diversion has occurred. These guidelines and remedies will apply fully to drugs purchased under a rebate option, and we believe that instituting rebates will not increase the potential for diversion.

Dated: May 22, 1998.

Claude Earl Fox,

Administrator.

[FR Doc. 98–17142 Filed 6–26–98; 8:45 am]

BILLING CODE 4160–15–P

DEPARTMENT OF HEALTH AND HUMAN SERVICES

National Institutes of Health

Notice of Establishment of the Secretary's Advisory Committee on Genetic Testing

Pursuant to the Federal Advisory Committee Act, as amended (5 U.S.C. Appendix 2), the Director, National Institutes of Health (NIH), announces the establishment of the Secretary's Advisory Committee on Genetic Testing (Committee).

This Committee will advise the Secretary of Health and Human Services on all aspects of the development and use of genetic tests, including making recommendations on policies and procedures for the safe and effective incorporation of genetic technologies into health care; assessing the effectiveness of existing and future measures for oversight of genetic tests; and identifying research needs related to the Committee's purview.

Unless renewed by appropriate action prior to its expiration, the charter for the Secretary's Advisory Committee on Genetic Testing will expire two years from the date of establishment.

Dated: June 22, 1998.

Harold Varmus,

Director, National Institutes of Health.

[FR Doc. 98–17168 Filed 6–26–98; 8:45 am]

BILLING CODE 4140–01–M

DEPARTMENT OF HEALTH AND HUMAN SERVICES

National Institutes of Health

National Cancer Institute; Notice of Closed Meeting

Pursuant to section 10(d) of the Federal Advisory Committee Act, as amended (5 U.S.C. Appendix 2), notice is hereby given of the following meeting.

The meeting will be closed to the public in accordance with the provisions set forth in sections 552b(c)(4) and 552b(c)(6), Title 5 U.S.C., as amended. The grant applications and the discussions could disclose confidential trade secrets or commercial property such as patentable material, and personal information concerning individuals associated with the grant applications, the disclosure of which would constitute a clearly unwarranted invasion of personal privacy.

Name of Committee: National Cancer Institute Initial Review Group Subcommittee D—Clinical Studies.

Date: August 2–5, 1998.

Time: 7:00 p.m. to 6:00 p.m.

Agenda: To review and evaluate grant applications.

Place: Holiday Inn—Silver Spring, 8777 Georgia Avenue, Silver Spring, MD 20910.

Contact Person: Martin H. Goldrosen, PhD, Scientific Review Administrator, Grants Review Branch, Division of Extramural Activities, National Cancer Institute, National Institute of Health, 6130 Executive Boulevard, Rm. 635F, Rockville, MD 20852–7405, (301) 496–7930.

(Catalogue of Federal Domestic Assistance Program Nos. 93.392, Cancer Construction; 93.393, Cancer Cause and Prevention Research; 93.394, Cancer Detection and Diagnosis Research; 93.395, Cancer Treatment Research; 93.396, Cancer Biology Research; 93.397, Cancer Centers Support; 93.398, Cancer Research Manpower; 93.399, Cancer Control, National Institutes of Health, HHS)

Dated: June 23, 1998.

LaVerne Y. Stringfield,

Committee Management Officer, NIH.

[FR Doc. 98–17172 Filed 6–26–98; 8:45 am]

BILLING CODE 4140–01–M

DEPARTMENT OF HEALTH AND HUMAN SERVICES

National Institutes of Health

National Cancer Institute; Notice of Closed Meeting

Pursuant to section 10(d) of the Federal Advisory Committee Act, as amended (5 U.S.C. Appendix 2), notice is hereby given of the following meeting.

The meeting will be closed to the public in accordance with the provisions set forth in sections 552b(c)(4) and 552b(c)(6), Title 5 U.S.C., as amended. The grant applications and the discussions could disclosed confidential trade secrets or commercial property such as patentable material, and personal information concerning individuals associated with the grant applications, the disclosure of which would constitute a clearly unwarranted invasion of personal privacy.

Name of Committee: National Cancer Institute Initial Review Group Subcommittee C—Basic & Preclinical.

Date: July 28–30, 1998.

Time: 7:30 a.m. to 5:00 p.m.

Agenda: To review and evaluate grant applications.

Place: Holiday Inn Georgetown, 2101 Wisconsin Avenue, N.W., Washington, DC 20007.

Contact Person: Virginia P. Wray, Phd, Scientific Review Administrator, Grants Review Branch, Division of Extramural Activities, National Cancer Institute, 6130 Executive Boulevard—Room 635, Rockville, MD 20895–7405, 301/496–9236.

(Catalogue of Federal Domestic Assistance Program Nos. 93.393, Cancer Cause and Prevention Research; 93.394, Cancer Detection and Diagnosis Research; 93.395, Cancer Treatment Research; 93.396, Cancer Biology Research; 93.397, Cancer Centers Support; 93.398, Cancer Research Manpower; 93.399, Cancer Control; 93.392, Cancer Construction, National Institutes of Health, HHS)

Dated: June 23, 1998.

LaVerne Y. Stringfield,

Committee Management Officer, NIH.

[FR Doc. 98–17173 Filed 6–26–98; 8:45 am]

BILLING CODE 4140–01–M

DEPARTMENT OF HEALTH AND HUMAN SERVICES

National Institutes of Health

National Cancer Institute; Notice of Closed Meeting

Pursuant to section 10(d) of the Federal Advisory Committee Act, as amended (5 U.S.C. Appendix 2), notice is hereby given of the following meeting.

The meetings will be closed to the public in accordance with the provisions set forth in sections 552b(c)(4) and 552b(c)(6), Title 5 U.S.C., as amended. The contract proposals and the discussions could disclose confidential trade secrets or commercial property such as patentable material, and personal information concerning individuals associated with the contract proposals, the disclosure of which would constitute a clearly unwarranted invasion of personal privacy.

Name of Committee: National Cancer Institute Special Emphasis Panel Epidemiologic Studies of the Mayak and Techa River Cohorts.

Date: July 10, 1998.

Time: 9:00 a.m. to 5:00 p.m.

Agenda: To review and evaluate contract proposals.

Place: Executive Plaza North—Conference Room D, 6130 Executive Boulevard, Rockville, MD 20852, (Telephone Conference Call).

Contact Person: C.M. Kerwin, Phd, Scientific Review Administrator, Special Review, Referral and Resources Branch, Division of Extramural Affairs, National Cancer Institute, National Institutes of Health, 6130 Executive Boulevard/EPN–609, Rockville, MD 20892–7405, 301/496–7421.

Name of Committee: National Cancer Institute Special Emphasis Panel Phase I Clinical Studies of Chemopreventive Agents.

Date: July 13, 1998.

Time: 9:00 a.m. to 5:00 p.m.

Agenda: To review and evaluate grant applications.

Place: Executive Plaza North—Conference Room F, 6130 Executive Blvd., Rockville, MD 20852, (Telephone Conference Call).

Contact Person: C.M. Kerwin, Phd, Scientific Review Administrator, Special Review, Referral and Resources Branch, Division of Extramural Affairs, National Cancer Institute, National Institutes of Health, 6130 Executive Boulevard/EPN–609, Rockville, MD 20892–7405, 301/496–7421.

Name of Committee: National Cancer Institute Special Emphasis Panel International Phase III IL–2 Study.

Date: July 17, 1998.

Time: 7:30 a.m. to 6:00 p.m.

Agenda: To review and evaluate grant applications.

Place: Holiday Inn Bethesda, 8120 Wisconsin Avenue, Bethesda, MD 20814.

Contact Person: Olivia A. Preble, Phd, Scientific Review Administrator, Grants Review Branch, Division of Extramural Activities, National Cancer Institute, National Institutes of Health, 6130 Executive Boulevard—Rm. 643, Rockville, MD 20892–7405, 301/496–7929.

(Catalogue of Federal Domestic Assistance Program Nos. 93.392, Cancer Construction; 93.393, Cancer Cause and Prevention Research; 93.394, Cancer Detection and Diagnosis Research; 93.395, Cancer Treatment Research; 93.396, Cancer Biology Research; 93.397, Cancer Centers Support; 93.398, Cancer Research Manpower; 93.399, Cancer Control, National Institutes of Health, HHS)

Dated: June 23, 1998.

LaVerne Y. Stringfield,

Committee Management Officer, NIH.

[FR Doc. 98–17175 Filed 6–26–98; 8:45 am]

BILLING CODE 4140–01–M

DEPARTMENT OF HEALTH AND HUMAN SERVICES

National Institutes of Health

National Cancer Institute; Notice of Meeting

Pursuant to section 10(d) of the Federal Advisory Committee Act, as amended (5 U.S.C. Appendix 2), notice is hereby given of a meeting of the Board of Scientific Counselors, National Cancer Institute.

The meeting will be open to the public as indicated below, with attendance limited to space available. Individuals who plan to attend and need special assistance, such as sign language interpretation or other reasonable accommodations, should notify the Contact Person listed below in advance of the meeting.

The meeting will be closed to the public as indicated below in accordance with the provisions set forth in section 552b(c)(6), Title 5 U.S.C., as amended for the review, discussion, and evaluation of individual intramural programs and projects conducted by the National Cancer Institute, including consideration of personnel qualifications and performance, and the competence of individual investigators, the disclosure of which would constitute a clearly unwarranted invasion of personal privacy.

Name of Committee: Board of Scientific Counselors, National Cancer Institute Subcommittee B—Basic Sciences.

Date: July 6, 1998.

Open: 8:30 am to 8:50 am.

Agenda: Call to Order by Board Chair and presentation by NCI Director regarding the Bypass Budget 2001.

Place: National Cancer Institute, 9000 Rockville Pike, Building 31, C Wing, 6th Floor, Conference Room 10, Bethesda, MD 20892 301/496–2378.

Closed: 8:50 am to Adjournment.

Agenda: To review and evaluate personal qualifications and performance, and competence of individual investigators.

Place: National Cancer Institute, 9000 Rockville Pike, Building 31, C Wing, 6th Floor, Conference Room 10, Bethesda, MD 20892.

Contact Person: Florence E. Farber, Phd, Executive Secretary, Office of Advisory Activities, Division of Extramural Activities, National Cancer Institute, National Institutes of Health 6130 Executive Boulevard, EPN 609, Rockville, MD 20892 301/496–2378.

This notice is being published less than 15 days prior to the meeting due to the timing limitations imposed by the review and funding cycle.

(Catalogue of Federal Domestic Assistance Program Nos. 93.393, Cancer Cause and Prevention Research; 93.394, Cancer

Detection and Diagnosis Research; 93.395, Cancer Treatment Research; 93.396, Cancer Biology Research; 93.397, Cancer Centers Support; 93.398 Cancer Research Manpower; 93.399, Cancer Control; 93.392, Cancer Construction, National Institute of Health, HHS)

Dated: June 23, 1998.

LaVerne Y. Stringfield,

Committee Management Officer, NIH.

[FR Doc. 98–17177 Filed 6–26–98; 8:45 am]

BILLING CODE 4140–01–M

DEPARTMENT OF HEALTH AND HUMAN SERVICES

National Institutes of Health

National Eye Institute; Notice of Closed Meeting

Pursuant to section 10(d) of the Federal Advisory Committee Act, as amended (5 U.S.C. Appendix 2), notice is hereby given of the following meeting.

The meeting will be closed to the public in accordance with the provisions set forth in sections 552b(c)(4) and 552b(c)(6), Title 5 U.S.C., as amended. The grant applications and the discussions could disclosed confidential trade secrets or commercial property such as patentable material, and personal information concerning individuals associated with the grant applications, the disclosure of which would constitute a clearly unwarranted invasion of personal privacy.

Name of Committee: National Eye Institute Special Emphasis Panel.

Date: July 10, 1998.

Time: 8:30 a.m. to 3:00 p.m.

Agenda: To review and evaluate grant applications.

Place: 6120 Executive Blvd., Suite 350, Rockville, MD 20892.

Contact Person: Andrew P. Mariani, Phd, Scientific Review Branch, 6130 Executive Blvd., Suite 350.

(Catalogue of Federal Domestic Assistance Program Nos. 93.867, Vision Research, National Institutes of Health, HHS)

Dated: June 23, 1998.

LaVerne Y. Stringfield,

Committee Management Officer, NIH.

[FR Doc. 98–17176 Filed 6–26–98; 8:45 am]

BILLING CODE 4140–01–M

DEPARTMENT OF HEALTH AND HUMAN SERVICES

National Institutes of Health

National Institute of General Medical Sciences; Notice of Closed Meeting

Pursuant to section 10(d) of the Federal Advisory Committee Act, as amended (5 U.S.C. Appendix 2), notice is hereby given of the following meeting.

The meeting will be closed to the public in accordance with the provisions set forth in sections 552b(c)(4) and 552b(c)(6), Title 5 U.S.C., as amended. The grant applications and the discussions could disclose confidential trade secrets or commercial property such as patentable material, and personal information concerning individuals associated with the grant applications, the disclosure of which would constitute a clearly unwarranted invasion of personal privacy.

Name of Committee: National Institute of General Medical Sciences Special Emphasis Panel Initiative for Minority Student Development Special Emphasis Panel.

Date: July 20–21, 1998.

Time: 8:00 am to 5:00 pm.

Agenda: To review and evaluate grant applications.

Place: Holiday Inn Bethesda, 8120 Wisconsin Avenue, Bethesda, MD 20814.

Contact Person: Michael A. Sesma, Scientific Review Administrator, Office of Scientific Review, NIGMS, Natcher Bldg., Room 1AS19H, 45 Center Drive, Bethesda, MD 20891.

(Catalogue of Federal Domestic Assistance Program Nos. 93.821, Cell Biology and Biophysics Research; 93.859, Pharmacology, Physiology, and Biological Chemistry Research; 93.862, Genetics and Developmental Biology Research; 93.88, Minority Access to Research Careers; 93.96, Special Minority Initiatives; 93.375, Minority Biomedical Research Support, National Institutes of Health, HHS)

Dated: June 23, 1998.

LaVerne Y. Stringfield,

Committee Management Officer, NIH.

[FR Doc. 98–17169 Filed 6–26–98; 8:45 am]

BILLING CODE 4140–01–M

DEPARTMENT OF HEALTH AND HUMAN SERVICES

National Institutes of Health

National Institute of Arthritis and Musculoskeletal and Skin Diseases; Notice of Closed Meeting

Pursuant to section 10(d) of the Federal Advisory Committee Act, as amended (5 U.S.C. Appendix 2), notice is hereby given of the following meeting.

The meetings will be closed to the public in accordance with the provisions set forth in sections 552b(c)(4) and 552b(c)(6), Title 5 U.S.C., as amended. The grant applications and the discussions could disclosed confidential trade secrets or commercial property such as patentable material, and personal information concerning individuals associated with the grant applications, the disclosure of which of which constitute a clearly unwarranted invasion of personal privacy.

Name of Committee: National Institute of Arthritis and Musculoskeletal and Skin Diseases Special Emphasis Panel, NIAM Special Emphasis Panel.

Date: July 9–10, 1998.

Time: 8:30 a.m. to 5:00 p.m.

Agenda: To review and evaluate grant applications.

Place: Double Tree Hotel, 1750 Rockville Pike, Rockville, MD 20852.

Contact Person: John R. Lymangrover, Ph.D., Scientific Review Administrator, NIAMS, 45 Center Drive, Room 5AS 25, Bethesda, MD 20892, (301) 594–4952.

Name of Committee: National Institute of Arthritis and Musculoskeletal and Skin Diseases Special Emphasis Panel, Basic Research on Biomechanical Signalling Mechanisms in Cartilage.

Date: July 16, 1998.

Time: 8:30 a.m. to 6:00 p.m.

Agenda: To review and evaluate grant applications.

Place: Holiday Inn Chevy Chase, 5520 Wisconsin Avenue, Chevy Chase, MD 20815.

Contact Person: Tommy L. Broadwater, Ph.D., Chief, NIAMS, 45 Center Drive, Room 5AS25U, Bethesda, MD 20892.

Name of Committee: National Institute of Arthritis and Musculoskeletal and Skin Diseases Special Emphasis Panel, Osteoporosis.

Date: July 26–27, 1998.

Time: 4:00 p.m. to 6:00 p.m.

Agenda: To review and evaluate grant applications.

Place: Holiday Inn Chevy Chase, 5520 Wisconsin Avenue, Chevy Chase, MD 20815.

Contact Person: Tommy L. Broadwater, Ph.D., Chief, NIAMS, 45 Center Drive, Room 5AS25U, Bethesda, MD 20892.

(Catalogue of Federal Domestic Assistance Program Nos. 93.846, Arthritis, Musculoskeletal and Skin Diseases Research, National Institutes of Health, HHS)

Dated: June 23, 1998.

LaVerne Y. Stringfield,

Committee Management Officer, NIH.

[FR Doc. 98–17170 Filed 6–26–98; 8:45 am]

BILLING CODE 4140–01–M

DEPARTMENT OF HEALTH AND HUMAN SERVICES

National Institutes of Health

National Institute of General Medical Sciences; Notice of Closed Meeting

Pursuant to section 10(d) of the Federal Advisory Committee Act, as amended (5 U.S.C. Appendix 2), notice is hereby given of the following meeting.

The meeting will be closed to the public in accordance with the provisions set forth in sections 552b(c)(4) and 552b(c)(6), Title 5 U.S.C., as amended. The grant applications and the discussions could disclose confidential trade secrets or commercial property such as patentable material, and personal information concerning individuals associated with the grant applications, the disclosure of which would constitute a clearly unwarranted invasion of personal privacy.

Name of Committee: Minority Programs Review Committee, Mbrs Subcommittee B, Minority Biomedical Research Support Review Subcommittee.

Date: July 9–10, 1998.

Time: 8:30 am to 5:00 pm.

Agenda: To review and evaluate grant applications.

Place: Natcher Building, Conference Room C, 45 Center Drive, Bethesda, MD 20892.

Contact Person: Michael A. Sesma, Scientific Review Administrator, Office of Scientific Review, NIGMS, Natcher Bldg., Room 1AS19H, 45 Center Drive, Bethesda, MD 20892.

(Catalogue of Federal Domestic Assistance Program Nos. 93.375, Minority Biomedical Research Support; 93.821, Cell Biology and Biophysics Research; 93.859, Pharmacology, Physiology, and Biological Chemistry Research; 93.862, Genetics and Developmental Biology Research; 93.88, Minority Access to Research Careers; 93.96, Special Minority Initiatives, National Institutes of Health, HHS)

Dated: June 23, 1998.

LaVerne Y. Stringfield,

Committee Management Officer, NIH.

[FR Doc. 98–17171 Filed 6–26–98; 8:45 am]

BILLING CODE 4140–01–M

DEPARTMENT OF HEALTH AND HUMAN SERVICES

National Institutes of Health

Center For Scientific Review; Notice of Closed Meetings

Pursuant to section 10(d) of the Federal Advisory Committee Act, as amended (5 U.S.C. Appendix 2), notice is hereby given of the following meetings.

The meetings will be closed to the public in accordance with the provisions set forth in sections 552b(c)(4) and 552b(c)(6), Title 5 U.S.C., as amended. The grant applications and the discussions could disclose confidential trade secrets or commercial property such as patentable material, and personal information concerning individuals associated with the grant applications, the disclosure of which would constitute a clearly unwarranted invasion of personal privacy.

Name of Committee: Chemistry and Related Sciences Special Emphasis Panel.

Date: July 7, 1998.

Time: 10:00 am to 11:30 am.

Agenda: To review and evaluate grant applications.

Place: NIH, Rockledge 2, Bethesda, MD 20892, (Telephone Conference Call).

Contact Person: Ronald Dubois, PHD, Scientific Review Administrator, Center for Scientific Review, National Institutes of Health, 6701 Rockledge Drive, room 4156, MSC 7806, Bethesda, MD 20892, (301) 435–1722.

Name of Committee: Biological and Physiological Sciences Special Emphasis Panel.

Date: July 15, 1998.

Time: 1:30 pm to 3:30 pm.

Agenda: To review and evaluate grant applications.

Place: NIH, Rockledge 2, Bethesda, MD 20892, (Telephone Conference Call).

Contact Person: Carol A. Campbell, Scientific Review Administrator, Center for Scientific Review, National Institutes of Health, 6701 Rockledge Drive, Room 5195C, MSC 7848, Bethesda, MD 20892, (301) 435–1257.

Name of Committee: Chemistry and Related Sciences Special Emphasis Panel ZRG3MCHA/1M.

Date: July 20, 1998.

Time: 11:00 am to 1:00 pm.

Agenda: To review and evaluate grant applications.

Place: NIH, Rockledge 2, Bethesda MD 20892, (Telephone Conference Call).

Contact Person: Ronald Dubois, PHD, Scientific Review Administrator, Center for Scientific Review, National Institutes of Health, 6701 Rockledge Drive, room 4156, MSC 7806, Bethesda, MD 20892, (301) 435–1711.

(Catalogue of Federal Domestic Assistance Program Nos. 93.306, Comparative Medicine, 93.306; 93.333, Clinical Research, 93.333, 93.337, 93.393–93.396, 93.837–93.844, 93.846–93.878, 93.892, 93.893, National Institutes of Health, HHS)

Dated: June 23, 1998.

LaVerne Y. Stringfield,

Committee Management Officer, NIH.

[FR Doc. 98–17174 Filed 6–26–98; 8:45 am]

BILLING CODE 4140–01–M

DEPARTMENT OF HEALTH AND HUMAN SERVICES

Office of Refugee Resettlement

Refugee Resettlement Program: Final Notice of Allocations to States of FY 1998 Funds for Refugee Social Services

AGENCY: Office of Refugee Resettlement (ORR), ACF, HHS.

ACTION: Final notice of allocations to States of FY 1998 funds for refugee [1] social services.

SUMMARY: This notice establishes the allocations to States of FY 1998 funds for social services under the Refugee Resettlement Program (RRP). We have added approximately $22.1 million in unexpended FY 19965 CMA funds to the social services formula program bringing the total to $90.9 million in funds available for formula social services in FY 1998.

This notice reflects the decision by Congress to provide $14,000,000 under social services to address the needs of refugees and communities impacted by recent changes in Federal assistance programs relating to welfare reform. This notice also announces ORR's intention to postpone a final decision on the elimination of the floor formula for States with small refugee populations until a later date. A notice of proposed social service allocations to States was published in the **Federal Register** on February 13, 1998, (63 FR 7422) for public comment. The population estimates that were used in the proposed notice have been adjusted in the final notice as a result of additional arrival information.

EFFECTIVE DATE: June 29, 1998.

FOR FURTHER INFORMATION CONTACT: Toyo Biddle, Director, Division of Refugee Self-sufficiency, (202) 401–9250.

SUPPLEMENTARY INFORMATION:

I. Amounts for Allocation

The Office of Refugee Resettlement (ORR) has available $129,990,000 in FY 1998 refugee social service funds as part of the FY 1998 appropriation for the Department of Health and Human Services (HHS) (Pub. L. 105–78).

The FY 1998 House Appropriations Committee Report (H.R. Rept. No. 105–205) reads as follows with respect to social services funds:

The bill provides $129,990,000 for social services, an increase of $19,108,000 over the comparable fiscal year 1997 appropriation and the budget request. Funds are distributed by formula as well as through the discretionary grant making process for special projects. The Committee agrees that $19,000,000 is available for assistance to serve communities affected by the Cuban and Haitian entrants and refugees whose arrivals in recent years have increased. The Committee has set-aside $16,000,000 for

[1] In addition to persons who meet all requirements of 45 CFR 400.43, ''Requirements for documentation of refugee status,'' eligibility for refugee social services also includes: (1) Cuban and Haitian entrants, under section 501 of the Refugee Education Assistance Act of 1980 (Pub. L. 96–422); (2) certain Amerasians from Vietnam who are admitted to the U.S. as immigrants under section 584 of the Foreign Operations Export Financing, and Related Programs Appropriations Act, 1988, as included in the FY 1988 Continuing Resolution (Pub. L. 100–202); and (3) certain Amerasians from Vietnam, including U.S. citizens, under title II of the Foreign Operations, Expoert Financing, and Related Programs Appropriations Acts, 1989 (Pub. L. 100–461), 1990 (Pub. L. 101–167), and 1991 (Pub. L. 101–513). For convenience, the term ''refugee'' is used in this notice to encompass all such eligible persons unless the specific context indicates otherwise.

Refugees admitted to the U.S. under admissions numbers set aside for private-sector-initiative admissions are not eligible to be served under the social service program (or under other programs supported by Federal refugee funds) during their period of coverage under their sponsoring agency's agreement with the Department of State—usually two years from their date of arrival or until they obtain permanent resident alien status, whichever comes first.

increased support to communities with large concentrations of refugees whose cultural differences make assimilation especially difficult justifying a more intense level and longer duration of Federal assistance. Finally, the Committee has set aside $14,000,000 to address the needs of refugees and communities impacted by recent changes in Federal assistance programs relating to welfare reform. The Committee urges ORR to assist refugees at risk of losing, or who have lost, benefits including SSI, TANF and Medicaid, in obtaining citizenship. In addition, ORR may initiate planning grants to create alternative cash and medical assistance programs for refugees.

The Committee recommends that ORR give special consideration in allocating grant funding to applicants providing rehabilitation services for victims of physical and mental torture. The Committee requests that ORR be prepared to testify regarding its activities in support of victims of torture during the fiscal year 1999 budget hearings.

The FY 1998 Senate Appropriations Committee Report (S. Rept. No. 105–58) adds the following:

The Committee is concerned that the current policy of the Office of Refugee Resettlement prohibiting the use of a portion of refugee social services and targeted assistance formula grant funds for refugees who have been in the United States for more than 5 years deprives some counties and States of the ability to give employment-related assistance to may of their refugee welfare recipients. The Committee urges the ORR to be flexible in considering waiver requests of the 5-year policy.

The Conference Report on Appropriations (H. Rept. No. 105–390) agrees with the House and Senate Reports regarding the allocation of social services.

The Director of the Office of Refugee Resettlement (ORR) will use the $129,990,000 appropriated for FY 1998 social services as follows:

- $68,841,500 will be allocated under the 3-year population formula, as set forth in this notice for the purpose of providing employment services and other needed services to refugees.
- $12,148,500 will be awarded as social service discretionary grants through competitive grant announcements that will be issued separately from this notice.
- $19,000,00 will be awarded to serve communities most heavily affected by recent Cuban and Haitian entrant and refugee arrivals. These funds would be awarded through a discretionary grant announcement that will be issued separately from this notice.
- $16,000,000 will be awarded through discretionary grants for communities with large concentrations of refugees whose cultural differences make assimilation especially difficult justifying a more intense level and longer duration of Federal assistance. A grant announcement will be issued separately from this notice.
- $14,000,000 will be awarded to address the needs of refugees and communities impacted by recent changes in Federal assistance programs relating to welfare reform. Awards will be made through announcements issued separately from this notice.

In addition, we are adding $22,066,190 in unexpended CMA funds that were obligated to States in FY 1996 to FY 1998 formula social service allocations to States, increasing the total amount available for the formula social services program in FY 1998 to $90,907,690. Congress provided ORR with broad carry-over authority in the FY 1998 HHS appropriations law to use FY 1996 CMA carry-over funds for assistance and other activities in the refugee program in fiscal years 1997 and 1998. The appropriations law state: ''* * * That funds appropriated pursuant to section 414(a) of the Immigration and Nationality Act under Pub.L. 104–134 for fiscal year 1996 shall be available for the costs of assistance provided and other activities conducted in such year and in fiscal years 1997 and 1998.'' We have decided that the best use of FY 1996 unexpended CMA funds would be to increase State allocations in the social services formula program to enable States to more fully serve both RCA refugees and refugee recipients of Temporary Assistance for Needy Families (TANF) within the refugee social services system. Fourth quarter formula social service grant awards to States will reflect the increased funding.

Refugee Social Service Funds

The population figures for the social services allocation include refugees, Cuban/Haitian entrants, Amerasians from Vietnam, and Kurdish asylees since these populations may be served through funds addressed in this notice. (A State must, however, have an approved State plan for the Cuban/Haitian Entrant Program or indicate in its refugee program State plan that Cuban/Haitian entrants will be served in order to use funds on behalf of entrants as well as refugees.)

The Director is allocating $90,907,690 to States on the basis of each State's proportion of the national population of refugees who has been in the U.S. 3 years or less as of October 1, 1997 (including a floor amount for States which have small refugee populations).

The use of the 3-year population base in the allocation formula is required by section 412(c)(1)(B) of the Immigration and Nationality Act (INA) which states that the ''funds available for a fiscal year for grants and contracts [for social services] * * * shall be allocated among the States based on the total number of refugees (including children and adults) who arrived in the United States not more than 36 months before the beginning of such fiscal year and who are actually residing in each State (taking into account secondary migration) as of the beginning of the fiscal year.''

As established in the FR 1991 social services notice published in the **Federal Register** of August 29, 1991, section I, ''Allocation Amounts'' (56 FR 42745), a viable floor amount for States which have small refugee populations is calculated as follows: If the application of the regular allocation formula yields less than $100,000, then—

(1) A base amount of $75,000 is provided for a State with a population of 50 or fewer refugees who have been in the U.S. 3 years or less; and

(2) For a State with more than 50 refugees who have been in the U.S. 3 years or less: (a) A floor has been calculated consisting of $50,000 plus the regular per capita allocation for refugees above 50 up to a total of $100,000 (in other words, the maximum under the floor formula is $100,000); (b) if this calculation has yielded less than $75,000, a base amount of $75,000 is provided for the State.

We indicated in the proposed notice that ORR intends to eliminate the floor formula beginning in FY 1999 and to use the 3-year refugee population allocations formula for all participating States. The Director has decided to postpone a final decision on this issue at this time to allow consideration of this issue within the context of other program changes that may result through ORR regulations changes. See the ''Discussion of Comments Received'' section of this notice for further discussion of this issue.

Population To Be Served

Although the allocation formula is based on the 3-year refugee population, in accordance with the current requirements of 45 CFR part 400 subpart I—Refugee Social Services, States are not required to limit social service programs to refugees who have been in the U.S. only 3 years. However, under 45 CFR 400.152, States may not provide services funded by this notice, except for referral and interpreter services, to refugees who have been in the United States for more than 60 months (5 years).

In accordance with 45 CFR 400.147, States are required to provide services to refugees in the following order of

priority, except in certain individual extreme circumstances: (a) All newly arriving refugees during their first year in the U.S., who apply for services; (b) refugees who are receiving cash assistance; (c) unemployed refugees who are not receiving cash assistance; and (d) employed refugees in need of services to retain employment or to attain economic independence.

ORR funds may not be used to provide services to United States citizens, since they are not covered under the authorizing legislation, with the following exceptions: (1) Under current regulations at 45 CFR 400.208, services may be provided to a U.S.-born minor child in a family in which both parents are refugees or, if only one parent is present, in which that parent is a refugee; and (2) under the FY 1989 Foreign Operations Export Financing, and Related Programs Appropriations Act (Pub. L. 100–461), services may be provided to an Amerasian from Vietnam who is a U.S. citizen and who enters the U.S. after October 1, 1988.

Service Priorities

In the past, a number of States have focused primarily on servicing refugee cash assistance (RCA) recipients because of the need to help these refugees become employed and self-sufficient within the 8-month RCA eligibility period. Now, with the passage of welfare reform, refugee recipients of Temporary Assistance for Needy Families (TANF) also face a time limit for cash assistance and need appropriate services as quickly as possible to become employed and self-sufficient. In order for refugees to move quickly off TANF, we believe it is crucial for these refugees to receive refugee-specific services that are designed to address the employment barriers that refugees typically face. We, therefore, strongly encourage State Refugee Coordinators to make every effort to develop agreements with their State TANF program to utilize, to the maximum extent possible, the existing refugee service system in a State for refugee TANF participants.

Refugee social service funding should be used to assist refugee families to achieve economic independence. To this end, States are required to ensure that a coherent family self-sufficiency plan is developed for each eligible family that addresses the family's needs from time of arrival until attainment of economic independence. (See 45 CFR 400.79 and 400.156(g).) Each family self-sufficiency plan should address a Family's needs for both employment related services and other needed social services. The family self-sufficiency plan must include: (1) A determination of the income level a family would have to earn to exceed its cash grant and move into self-support without suffering a monetary penalty; (2) a strategy and timetable for obtaining that level of family income through the placement in employment of sufficient numbers of employable family members at sufficient wage levels; and (3) employability plans for every employable member of the family.

Reflecting section 412(a)(1)(A)(iv) of the INA, and in keeping with 45 CFR 400.145(c), States must ensure that women have the same opportunities as men to participate in all services funded under this notice, including job placement services. In addition, services must be provided to the maximum extent feasible in a manner that includes the use of bilingual/bicultural women on service agency staffs to ensure adequate service access by refugee women. The Director also strongly encourages the inclusion of refugee women in management and board positions in agencies that serve refugees. In order to facilitate refugee self-support, the Director also expects States to implement strategies which address simultaneously the employment potential of both male and female wage earners in a family unit, particularly in the case of large families. States are expected to make very effort to assure the availability of day care services for children in order to allow women with children the opportunity to participate in employment services or to accept or retain employment. To accomplish this, day care may be treated as a priority employment-related service under the refugee social services program. Refugees who are participating in employment services or have accepted employment are eligible for day care services for children. For an employed refugee, day care funded by refugee social service dollars should be limited to one year after the refugee becomes employed. States are expected to use day care funding from other publicly funded mainstream programs as a prior resource and are expected to work with service providers to assure maximum access to other publicly funded resources for day care.

In accordance with 45 CFR 400.146, social service funds must be used primarily for employability services designed to enable refugees to obtain jobs within one year of becoming enrolled in services in order to achieve economic self-sufficiency as soon as possible. Social services may continue to be provided after a refugee has entered a job to help the refugee retain employment or move to a better job. Social service funds may not be used for long-term training programs such as vocational training that last for more than a year or educational programs that are not intended to lead to employment within a year.

In accordance with 45 CFR 400.156(e), refugee social services must be provided, to the maximum extent feasible, in a manner that is culturally and linguistically compatible with refugee's language and cultural background. In light of the increasingly diverse population of refugees who are resettling in this country, refugee service agencies will need to develop practical ways of providing culturally and linguistically appropriate services to a changing ethnic population.

Services funded under this notice must be refugee-specific services which are designed specifically to meet refugee needs and are in keeping with the rules and objectives of the refugee program. Vocational or job skills training, on-the-job training, or English language training, however, need not be refugee-specific (45 CFR 400.156(d)).

English language training must be provided in a concurrent, rather than sequential, time period with employment or with other employment-related activities (45 CFR 400.156(c)).

When planning State refugee services, States must take into account the reception and placement (R & P) services provided by local resettlement agencies in order to utilize these resources in the overall program design and to ensure the provision of seamless, coordinated services to refugees that are not duplicative (45 CFR 400.156(b)).

In order to provide culturally and linguistically compatible services in as cost-efficient a manner as possible in a time of limited resources, ORR encourages States and counties to promote and give special consideration to the provision of refugee social services through coalitions of refugee service organizations, such as coalitions of mutual assistance associations (MAAs) voluntary resettlement agencies, or a variety of service providers. ORR believes it is essential for refugee-serving organizations to form close partnerships in the provision of services to refugees in order to be able to respond adequately to a changing refugee picture. Coalition-building and consolidation of providers is particularly important in communities with multiple service providers in order to ensure better coordination of services and maximum use of funding for services by minimizing the funds used for multiple administrative overhead costs.

States should also expect to use funds available under this notice to pay for

social services which are provided to refugees who participate in alternative projects. Section 412(e)(7)(A) of the INA provides that:

> The Secretary [of HHS] shall develop and implement alternative projects for refugees who have been in the United States less than thirty-six months, under which refugees are provided interim support, medical services, support (social) services, and case management, as needed, in a manner that encourages self-sufficiency, reduces welfare dependency, and fosters greater coordination among the resettlement agencies and service providers.

This provision is generally known as the Wilson/Fish Amendment. The Department has already issued a separate notice in the **Federal Register** with respect to applications for such projects (60 FR 15766, March 27, 1995). The notice on alternative projects does not contain provisions for the allocation of additional social service funds beyond the amounts established in this notice. Therefore a State which may wish to consider carrying out such a project should take note of this in planning its use of social service funds being allocated under the present notice.

The Use of MAAs

ORR believes that the use of qualified refugee mutual assistance associations in the delivery of social services helps to ensure the provision of culturally and linguistically appropriate services as well as increasing the effectiveness of the overall service system. Therefore, we expect States to use MAAs as service providers to the maximum extent possible. We strongly encourage States when contracting for services, including employment services, to give consideration to the special strengths of MAAs, whenever contract bidders are otherwise equally qualified, provided that the MAA has the capability to deliver services in a manner that is culturally and linguistically compatible with the background of the target population to be served. ORR also strongly encourages MAAs to ensure that their management and board composition reflect the major target populations to be served. ORR expects States to continue to assist MAAs in seeking other public and/or private funds for the provision of services to refugee clients.

States may use a portion of their social service grant, either through contracts or through the use of State/county staff, to provide technical assistance and organizational training to strengthen the capability of MAAs to provide employment services, particularly in States where MAA capability is weak or undeveloped.

ORR defines MAAs as organizations with the following qualifications:

a. The organization is legally incorporated as a nonprofit organization; and

b. Not less than 51% of the composition of the Board of Directors or governing board of the mutual assistance association is comprised of refugees or former refugees, including both refugee men and women.

II. Discussion of Comments Received

We received 16 letters of comment in response to the notice of proposed FY 1998 allocations to States for refugee social services. The comments are summarized below and are followed in each case by the Department's response.

Comment: Thirteen commenters expressed concern over the proposed elimination of a floor amount for States with small refugee populations. Four States that receive a floor amount indicated that they would be forced to withdraw from the refugee program if the floor allocation is eliminated because the social services grant level would be insufficient to enable the program to continue to operate. Several comments indicated that refugees would go unserved in small States without a floor allocation. Other commenters made the point that once a State program is eliminated, it would be very difficult, and perhaps impossible, to reinstate the program in order to meet refugee emergencies that may arise in the future. Two commenters felt that the basis for elimination of the floor was unclear and needed to be clarified.

Representing an alternate view, two commenters expressed support for elimination of the floor for small States. One of the commenters, however, recommended reserving a small portion of discretionary funds to assist small States to continue in the refugee program.

Response: We recognize the expressed concerns of the States and refugee service providers that would be affected by the elimination of the small State floor and wish to be careful in considering all factors in making a final decision on this issue. We are also mindful of the fact that significant changes in refugee policy may result from the regulations process we are currently engaged in, and that it would make sense to consider other policy changes, such as elimination of the floor, within that context. We have decided, therefore, to postpone a final decision on elimination of the floor for small States to allow consideration of the floor issue within the context of other program changes that may result through ORR regulations changes. This means that we do not plan to eliminate floor allocations to small States in FY 1999. We also want to assure the floor States that the Director will not make a final decision on this issue without first meeting with each of the affected States to discuss implications and alternatives.

Comment: Three commenters objected to the fact that each year an ever increasing portion of refugee social services funding is awarded through discretionary programs instead of through the social service formula program. While recognizing that Congress increased the social services appropriation to serve specific types of needs, the commenters recommended that a responsible approach to the allocation of these funds would be to allocate these funds through the social services formula program, thereby allowing States to determine how best to address these special needs at the local level. The commenters felt that the quality of services would improve by allowing States and local areas greater discretion in determining how needs should be met. One commenter indicated that the different funding sources for self-sufficiency services within the refugee program make it difficult and unnecessarily complicated for States. Another commenter recommended that ORR consider an allotment of 75% of the total social services appropriation to States and 25% to discretionary programs.

Response: The use of discretionary programs allows ORR to better ensure that the service funds that Congress intends for certain populations or certain needs are targeted to the communities where these special populations reside or where special needs are the greatest. Allocation of these funds through the social services formula program would distribute funds to all States, regardless of whether the target populations reside or the target needs exist to any significant degree in each State. We believe the former method is the better method to ensure that Congressional intent is met.

Comment: One commenter stated that the 3-year population formula for social services is inequitable to States with high concentrations of refugees who have been in the U.S. more than 3 years. The commenter recommended that ORR work to have the Refugee Act amended to allow social services funds to be allocated on the basis of a State's total refugee population needing employment services.

Response: States with large concentrations of refugees also receive targeted assistance funding which is

expressly intended for services to long-term refugee welfare recipients, such as the post-36-month population, who are still in need of employment services. Therefore, we do not see a particular need to amend the statutory formula for social services.

Comment: One commenter recommended that ORR should be responsive to the Senate Appropriations Committee's request that ORR be flexible in considering waiver requests regarding the limitation of eligibility for services to refugees who have been in the U.S. less than 5 years. The commenter recommended that ORR grant States maximum flexibility to use service funds for refugees who have been in the U.S. more than 5 years.

Response: We are very willing to consider any requests for a waiver of the 5-year service limitation that are submitted to ORR, as long as documentation is provided to ensure that all refugees residing in a State or California county, who have been in the U.S. less than 5 years, are being fully served. What we cannot do, however, is to delegate the authority to waive Federal regulations pertaining to the refugee program to a State official, as was requested by one State. The authority for waiving Federal refugee program regulations rests solely with the Director of ORR as the Federal official responsible for the administration of the program and, therefore, may not be delegated.

III. Allocation Formula

Of the funds available for FY 1998 for social services, $90,907,690 is allocated to States in accordance with the formula specified below. A State's allowable allocation is calculated as follows:

1. The total amount of funds determined by the Director to be available for this purpose; divided by—

2. The total number of refugees, Cuban/Haitian entrants, Amerasians from Vietnam, and Kurdish asylees who arrived in the United States not more than 3 years prior to the beginning of the fiscal year for which the funds are appropriated, as shown by the ORR Refugee Data System. The resulting per capita amount is multiplied by—

3. The number of persons in item 2, above, in the Sate as of October 1, 1997, adjusted for estimated secondary migration.

The calculation above yields the formula allocation for each State. Minimum allocations for small States are taken into account.

IV. Basis of Population Estimates

The population estimates for the allocation of funds in FY 1998 are based on data on refugee arrivals from the ORR Refugee Data System, adjusted as of October 1, 1997, for estimated secondary migration. The data base includes refugees of all nationalities, Amerasians from Vietnam, Cuban and Haitian entrants, and Kurdish asylees.

For fiscal year 1998, ORR's formula allocations for the States for social services are based on the numbers of refugees, Amerasians, Kurdish asylees, and entrants who arrived during the preceding three fiscal years: 1995, 1996, and 1997, based on arrival data by State. Therefore, estimates have been developed of the numbers of refugees and entrants with arrival or resettlement dates between October 1, 1994, and September 30, 1997, and who are thought to be living in each State as of October 1, 1997.

The estimates of secondary migration were based on data submitted by all participating States on Form ORR–11 (OMB # 0970–0043) on secondary migrants who have resided in the U.S. for 36 months or less, as of September 30, 1997. The total migration reported by each State was summed, yielding in- and out-migration figures and a net migration figure for each State. The net migration figure was applied to the State's total arrival figure, resulting in a revised population estimate.

Estimates were developed separately for refugees and entrants and then combined into a total estimated 3-year refugee/entrant population for each State. Eligible Amerasians and Kurdish asylees are included in the refugee figures.

With regard to Havana parolees, we have adjusted the 3-year population of one State, the State of Florida, based on documentation the State provided regarding the number of Havana parolee arrivals to that State. For all other States, in the absence of reliable data on the State-by-State resettlement of this population, we are crediting each State that received entrant arrivals during the 3-year period from FY 1995–FY 1997 with a prorated share of the 5,992 parolees reported by the Immigration and Naturalization Service (INS) to have come to the U.S. directly from Havana in FY 1997. In addition, we have credited each State with the same share of FY 1995 and FY 1996 Havana parolees that they were credited with in the final FY 1996 and FY 1997 social service notices. The allocations in this notice reflect these additional parolee numbers.

Table 1, below, shows the estimated 3-year populations, as of October 1, 1997, of refugees (col. 1), entrants (col. 2), Havana parolees (col. 3); total refugee/entrant population, (col. 4); the formula amounts which the population estimates yield (col. 5); and the allocation amounts after allowing for the minimum amounts (col. 6).

V. Allocation Amounts

Funding subsequent to the publication of this notice will be contingent upon the submitted and approval of a State annual services plan that is developed on the basis of a local consultative process, as required by 45 CFR 400.11(b)(2) in the ORR regulations. The following amounts are allocated for refugee social services in FY 1998:

TABLE 1.—ESTIMATED 3-YEAR REFUGEE/ENTRANT POPULATIONS OF STATES PARTICIPATING IN THE REFUGEE PROGRAM AND FINAL SOCIAL SERVICE FORMULA AMOUNTS AND ALLOCATIONS FOR FY 1998

State	Refugees [1] (1)	Entrants (2)	Havana [2] parolees (3)	Total population (4)	Formula amount (5)	Allocation (6)
Alabama	523	113	61	697	$201,618	$201,618
Alaska [3]	0	0	0	0	0	0
Arizona	4,979	542	324	5,845	1,690,760	1,690,760
Arkansas	183	13	6	202	58,432	93,968
California [4]	45,673	948	667	47,288	13,678,816	13,678,816
Colorado	3,502	9	7	3,518	1,017,638	1,017,638
Connecticut	2,124	297	182	2,603	752,960	752,960
Delaware	34	4	3	41	11,860	75,000
Dist. of Columbia	1,831	14	8	1,853	536,010	536,010
Florida	14,625	24,247	19,517	58,389	16,889,960	16,889,960
Georgia	8,420	247	153	8,820	2,551,327	2,551,327

TABLE 1.—ESTIMATED 3-YEAR REFUGEE/ENTRANT POPULATIONS OF STATES PARTICIPATING IN THE REFUGEE PROGRAM AND FINAL SOCIAL SERVICE FORMULA AMOUNTS AND ALLOCATIONS FOR FY 1998—Continued

State	Refugees [1] (1)	Entrants (2)	Havana [2] parolees (3)	Total population (4)	Formula amount (5)	Allocation (6)
Hawaii	236	1	0	237	68,556	100,000
Idaho	1,443	1	1	1,445	417,990	417,990
Illinois	11,462	446	251	12,159	3,517,187	3,517,187
Indiana	1,195	11	9	1,215	351,458	351,458
Iowa	4,851	6	3	4,860	1,405,833	1,405,833
Kansas	1,601	17	10	1,628	470,925	470,925
Kentucky [5]	3,065	579	248	3,892	1,125,824	1,125,824
Louisiana	1,345	239	163	1,747	505,348	505,348
Maine	674	1	0	675	195,255	195,255
Maryland	3,700	170	104	3,974	1,149,544	1,149,544
Massachusetts	7,176	151	113	7,440	2,152,140	2,152,140
Michigan	7,327	396	192	7,915	2,289,541	2,289,541
Minnesota	8,726	25	15	8,766	2,535,707	2,535,707
Mississippi	37	32	22	91	26,323	75,000
Missouri	5,765	22	17	5,804	1,678,901	1,678,901
Montana	226	0	0	226	65,374	100,000
Nebraska	1,825	40	17	1,882	544,399	544,399
Nevada [5]	692	803	551	2,046	591,838	591,838
New Hampshire	903	1	0	904	261,497	261,497
New Jersey	3,866	1,110	799	5,775	1,670,512	1,670,512
New Mexico	466	787	613	1,866	539,771	539,771
New York	38,386	1,184	793	40,363	11,675,649	11,675,649
North Carolina	3,179	45	23	3,247	939,247	939,247
North Dakota	1,163	4	3	1,170	338,441	338,441
Ohio	3,985	54	28	4,067	1,176,445	1,176,445
Oklahoma	772	17	10	799	231,124	231,124
Oregon	4,383	514	273	5,170	1,495,506	1,495,506
Pennsylvania	7,217	327	166	7,710	2,230,242	2,230,242
Rhode Island	346	7	3	356	102,979	102,979
South Carolina	346	8	4	358	103,557	103,557
South Dakota	658	0	0	658	190,337	190,337
Tennessee	3,570	225	105	3,900	1,128,138	1,128,138
Texas	11,470	1,064	703	13,237	3,829,016	3,829,016
Utah	2,567	1	0	2,568	742,835	742,835
Vermont	714	0	0	714	206,536	206,536
Virginia	4,834	252	143	5,229	1,512,573	1,512,573
Washington	17,412	66	30	17,508	5,064,471	5,064,471
West Virginia	14	1	0	15	4,339	75,000
Wisconsin	2,387	18	11	2,416	698,867	698,867
Wyoming [3]	0	0	0	0	0	0
Total	251,878	35,059	26,351	313,288	90,623,606	90,907,690

[1] Includes: refugees, Kurdish asylees, and Amerasian immigrants from Vietnam.
[2] For FY 1997, Florida's HP's (3957) were based on actual data while HP's in other States (2035) were prorated based on the States' proportion of the three year (FY 1995–1997) entrant population. For FY 1996, Florida's HP's (7303) were based on actual data while HP's in other States (2611) were prorated based on the States' proportion of the three year (FY 1994–1996) entrant population. For FY 1995, Florida's HP's (8245) were based on actual data while HP's in other States (2188) were prorated based on the States' proportion of the three year (FY 1993–1995) entrant population.
[3] Alaska and Wyoming no longer participate in the Refugee Program.
[4] A portion of the California allocation is expected to be awarded to continue a Wilson/Fish project in San Diego.
[5] The allocation for Kentucky and Nevada is expected to be awarded to continue a Wilson/Fish project.

VI. Paperwork Reduction Act

This notice does not create any reporting or recordkeeping requirements requiring OMB clearance.

(Catalog of Federal Domestic Assistance No. 93.566 Refugee Assistance—State Administered Programs)

Dated: June 19, 1998.

Lavinia Limon,

Director, Office of Refugee Resettlement.

[FR Doc. 98–17266 Filed 6–26–98; 8:45 am]

BILLING CODE 4184–01–M

DEPARTMENT OF HOUSING AND URBAN DEVELOPMENT

[Docket No. FR–4352–N–04]

Notice of Proposed Information Collection: Comment Request

AGENCY: Office of the Assistant Secretary for Public and Indian Housing, HUD.

ACTION: Notice.

SUMMARY: The proposed information collection requirement described below will be submitted to the Office of Management and Budget (OMB) for review, as required by the Paperwork Reduction Act. The Department is soliciting public comments on the subject proposal.

DATES: Comments are due: August 28, 1998.

ADDRESSES: Interested persons are invited to submit comments regarding this proposal. Comments should refer to the proposal by name and/or OMB Control Number and should be sent to: Mildred M. Hamman, Reports Liaison

Officer, Department of Housing and Urban Development, 451 Seventh Street, SW, Room 4238, Washington, DC 20410–5000.

FOR FURTHER INFORMATION CONTACT: Mildred M. Hamman, (202) 708–3642, extension 4128, for copies of other available documents. (This is not a toll-free number).

SUPPLEMENTARY INFORMATION: The Department will submit the proposed information collection to OMB for review, as required by the Paperwork Reduction Act of 1995 (44 U.S.C. Chapter 35, as amended).

This Notice is soliciting comments from members of the public and affecting agencies concerning the proposed collection of information to: (1) Evaluate whether the proposed collection of information is necessary for the proper performance of the functions of the agency, including whether the information will have practical utility; (2) Evaluate the accuracy of the agency's estimate of the burden of the proposed collection of information; (3) Enhance the quality, utility, and clarity of the information to be collected; and (4) Minimize the burden of the collection of information on those who are to respond; including through the use of appropriate automated collection techniques or other forms of information technology, e.g., permitting electronic submission of responses.

This Notice also lists the following information: Title of Proposal: Subrecipient Agreement OMB Control Number, if applicable: Description of the need for the information and proposed use: This information is needed in order for the Tribe/Tribally Designated Housing Entity (TDHE) to be able to effectively monitor the activities of the subrecipient and to ensure that funds are being utilized in accordance with applicable statutes and regulations. The authority for collection of this information is 1996 Native American Housing and Self-Determination Act (NAHASDA).

Agency form numbers, if applicable: None.

Members of affected public: Tribal Governments, Tribally Designated Housing Entities (THDEs).

Estimation of the total number of hours needed to prepare the information collection including number of respondents, frequency of response, and hours of response. 200 respondents, four times per year (average), 10 hours per response, 8,000 hours total reporting burden.

Status of the proposed information collection: New.

Authority: The Paperwork Reduction Act of 1995, 44 U.S.C. Chapter 35, as amended.

Dated: June 22, 1998.

Deborah Vincent,

General Deputy Assistant Secretary for Public and Indian Housing.

BILLING CODE 4210–33–M

- - SAMPLE - -

SUBRECIPIENT AGREEMENT

Agreement between
(insert name of Recipient)
and
(insert name of Subrecipient)
for the Implementation of the
Indian Housing Block Grant Number _____

This Agreement is entered into between (insert name of Tribe/TDHE), hereinafter referred to as Recipient, and the (insert name of Subrecipient), hereinafter referred to as Subrecipient, to authorize Subrecipient to act as the subrecipient entity for the implementation of the Indian Housing Block Grant (IHBG) Number _____ under the Native American Housing and Self Determination Act of 1996 (NAHASDA). The term of this Agreement and the provisions herein shall be extended to cover any additional time period during which the Subrecipient remains in control of the IHBG fund or other assets including program income.

1. WORK ASSIGNED

The work assigned under this Agreement is as follows:

(Insert specific description of the work assigned to the Subrecipient. Include any exceptions, deletions or special circumstances.)

2. OBLIGATIONS OF THE SUBRECIPIENT

A. Statement of Work (SOW).

1. The Subrecipient shall be responsible, on behalf and in the best interests of the Recipient/TDHE, for the successful implementation of the specific IHBG Number _____ activities, as described in this Agreement

2. The Subrecipient shall supervise and monitor the day-to-day performance of its staff/any contractors and shall report to the Recipient regarding their monitoring findings on a regular

basis. It will also submit regular progress reports, revised documentation or schedules, and immediately alert the Recipient in writing as to any problems encountered which could delay or alter the agreed upon terms of the Agreement.

3.The Subrecipient shall advocate, solicit, coordinate, procure, manage, develop, and maintain the program as stated in this Agreement on behalf of the Recipient. This includes entering into agreements, arbitrating, compromising, negotiating, and settling disputes, and securing, obtaining, managing, transferring, and holding funds from any source.

4. The Subrecipient shall adhere to all applicable laws, regulations, and guidance in the administration of this Agreement. The Subrecipient agrees that it is responsible for any damages incurred by the Recipient as a result of Subrecipient's failure in this regard.

B. Schedule of Work.

1. The Subrecipient shall prepare and submit a Schedule of Work (Schedule) specifying work to be done, dates of completion and sources of funds. This schedule must be approved by the Recipient prior to beginning of work or release of funds.

2. Proposed changes or amendments to the Schedule must be submitted in writing to the Recipient for review and concurrence. All such documents become a part of this Agreement and are thus subject to the same standards and requirements stipulated herein.

C. Budget.

1.The budgetary amount established for the work assigned under this Agreement totals $(insert dollar amount). The Subrecipient will make requests for funds commensurate with the time frames and formats prescribed by the Recipient. (Recipient to state specific windows for requests and attach copies of forms it wants the Subrecipient to use.)

2.After the Recipient has determined that the work was performed satisfactorily, payments will be

made for eligible expenses actually incurred by the Subrecipient, and will not exceed the actual cash requirements. Payments will be made against the line items as specified in the approved budget. Payments will be denied or made within 30 days of request by the Subrecipient.

3.The Subrecipient will submit monthly accounting statements to the Recipient. The date established for these submissions is (Recipient to insert the day/date each month that the statements are due.) The Subrecipient will also submit other reasonable written reports upon request by the Recipient.

3.RECORDS AND REPORTS

A. Establishment and Maintenance of Records

1. The Subrecipient shall maintain records including, but not limited to, financial records, bid documents, and all other records sufficient to reflect all direct and indirect costs incurred to perform the work assigned.

2. The Subrecipient shall maintain reports as required by this Agreement. It shall establish and maintain all backup data necessary to support those reports.

3. The Subrecipient is responsible for maintaining all other records and reports as required by law, including, but not limited to those required by the regulation implementing NAHASDA.

B. Preservation of Records and Reports.

1. The Subrecipient shall preserve and make available for review and inspection all records and reports related to the work assigned under this Agreement. These records and reports shall be maintained for a period of three years after the program close out. Program close out shall be the point at which the Recipient agrees that the responsibilities of the Subrecipient have been completed.

2. The Subrecipient shall retain these records and reports beyond this period of time until any possible litigation audit findings, or claims have been resolved.

4. AUDITS

A. Review of Records.

1. The Subrecipient must make their records available for review by the recipient, as well as others authorized by the Recipient.

B. Compliance.

1. The Subrecipient must comply with applicable sections of OMB Circular No. A-133, Revised June 24, 1997.

5.OBLIGATIONS OF THE TRIBE

A. Timely Payments.

1. The Recipient must perform prompt reviews of payment requests submitted by the Subrecipient. Requests for payments shall be either denied or approved and made by the Recipient within 30 days of request by the Subrecipient.

B. Monitoring Activities.

1. The Recipient shall establish a schedule for periodic review of the Subrecipient. Reviews shall be conducted (insert time period for review, e.g., at the end of each quarter, every, six months, etc.).

2. On site reviews may be made only after the Recipient has provided notice to the Subrecipient of such review in writing at least (insert time for notice, e.g., one week, 10 days, etc.) prior to the review.

C. Provision of Information.

1. The Recipient shall provide the Subrecipient with program information necessary for the Subrecipient to perform their duties with respect to this Agreement. An example of program information is the Indian Housing Plan, or applicable portions, for the tribe for which activities under this Agreement are to be undertaken.

6. OTHER REQUIREMENTS

A. Nondiscrimination Requirements.

1. Subrecipients must comply with the nondiscrimination requirements shown in 24 CFR 1000.12.

B. Relocation and Acquisition.

1. Subrecipients must comply with the relocation and real property acquisition policies as shown in 24 CFR 1000.14.

C. Labor Standards.

1. Subrecipients must comply with the labor standards as shown in 24 CFR 1000.16.

D. Environmental Reviews.

1. A Subrecipient may collect data and provide information for an environmental review to the Recipient, but it may not certify or assume responsibility for an environmental review. See 24 CRF 1000.18.

E. Administrative Requirements.

1. Subrecipients must comply with the administrative requirements as listed in 24 CFR 1000.26.

F. Conflict of Interest.

1. Subrecipients must comply with the conflict of interest provisions as shown in 24 CFR 1000.30 and Part 85.36

G. Lead-Based Paint Poisoning Prevention.

1. Subrecipients must comply with the lead-based paint poisoning prevention requirements as shown in 24 CFR 1000.40.

H. Section 3 of the Housing and Urban Development Act of 1968.

1. Subrecipients must comply with Section 3 of the Housing and Urban Development Act of 1968 as set forth in 24 CFR 1000.42.

I. Use of Debarred, Suspended or Ineligible Contractors.

1. Subrecipients must comply with the prohibitions in 24 CFR Part 24, as well as any tribal requirements, with regard to the use of debarred, suspended or ineligible contractors. (24 CFR 1000.44).

J. Drug-Free Workplace.

1. Subrecipients must comply with the Drug-Free Workplace Act of 1988, HUD's implementing regulations at 24 CFR Part 24, and any tribal requirements. (24 CFR 1000.46).

K. Indian Preference.

1. Subrecipients must comply with the Indian preference requirements pursuant to Section 7(b) of the Indian Self-Determination and Education Assistance Act (25 USC 450e(b)). (24 CFR 1000.48).

L. Other.

1. Subrecipients must comply with all other applicable portions of 24 CFR Part 1000, as well as all other applicable laws and regulations.

7. AMENDMENTS

This agreement may be amended by the Subrecipient or the Recipient at any time provided that such amendments make specific reference to this agreement, are executed in writing, signed by an authorized representative of both organizations, and approved by the Recipient's, governing body. Such amendments shall not invalidate this agreement, or relieve or release either party from its obligations under this Agreement.

The Recipient may, at its discretion, amend this agreement to conform with federal, state or local governmental guidelines, policies and available funding amounts, or for other reasons. If such amendments result in a change in the funding, the scope of service or schedule or, the activities to be undertaken as part of this agreement, such

modification will be incorporated only by written amendment signed by both the Recipient and the Subrecipient.

8. SUSPENSION AND/OR TERMINATION

The Recipient retains the right to suspend or terminate this Agreement should the Subrecipient in any way materially fail to comply with any term of the award. The award may also be terminated for convenience subject to the provisions set forth in 24 CFR 85.43 and 85.44.

9. REVERSION OF ASSETS

Upon the expiration of this Agreement, the Subrecipient shall transfer to the Recipient all funds on hand at the time of expiration of this Agreement, and all accounts receivable that are attributable to the use of these funds. All real property that was acquired or improved with NAHASDA funds and is under the control of the Subrecipient shall be returned to the Recipient, unless property ownership or control has been transferred as evidenced by a written document and attached as an addendum to this Agreement.

[FR Doc. 98–17276 Filed 6–26–98 8:45 am]
BILLING CODE 4210–33–M

DEPARTMENT OF HOUSING AND URBAN DEVELOPMENT

[Docket No. FR–4352–N–05]

Notice of Proposed Information Collection: Comment Request

AGENCY: Office of the Assistant Secretary for Public and Indian Housing, HUD.

ACTION: Notice.

SUMMARY: The proposed information collection requirement described below will be submitted to the Office of Management and Budget (OMB) for review, as required by the Paperwork Reduction Act. The Department is soliciting public comments on the subject proposal.

DATES: Comments due date: August 28, 1998.

ADDRESSES: Interested persons are invited to submit comments regarding this proposal. Comments should refer to the proposal by name and/or OMB Control Number and should be sent to: Mildred M. Hamman, Reports Liaison Officer, Department of Housing and Urban Development, 451 Seventh Street, SW., Room 4238, Washington, DC 20410.

FOR FURTHER INFORMATION CONTACT: Mildred M. Hamman, (202) 708–3642, extension 4128, for copies of other available documents. (This is not a toll-free number).

SUPPLEMENTARY INFORMATION: The Department will submit the proposed information collection to OMB for review, as required by the Paperwork Reduction Act of 1995 (44 U.S.C. Chapter 35, as amended).

This Notice is soliciting comments from members of the public and affecting agencies concerning the proposed collection of information to: (1) Evaluate whether the proposed collection of information is necessary for the proper performance of the functions of the agency, including whether the information will have practical utility; (2) Evaluate the accuracy of the agency's estimate of the burden of the proposed collection of information; (3) Enhance the quality, utility, and clarity of the information to be collected; and (4) Minimize the burden of the collection of information on those who are to respond; including through the use of appropriate automated collection techniques or other forms of information technology, e.g., permitting electronic submission of responses.

This Notice also lists the following information:

Title of Proposal: Contract for Development of Architectural/Engineering (A/E) Services and Comprehensive Improvement Assistance Program (CIAP) A/E Services.

OMB Control Number, if applicable: 2577–0015.

Description of the need for the information and proposed use: The contractual agreements between a HUD grantee (housing agency, (HA)) and an architect/engineer (A/E) for design and construction services establish responsibilities of both parties pursuant to the contract. The HA and A/E are not required by the contract to submit any materials to HUD. These contractual agreements are required by Federal Law or regulation pursuant to 24 CFR Part 85.36. Signing of the contracts is required to obtain or retain benefits.

Agency form numbers, if applicable: HUD–51915, HUD–51915–A.

Members of affected public: State, Local Government, Businesses or other for-profit.

Estimation of the total number of hours needed to prepare the information collection including number of respondents, frequency of response, and hours of response: 2,630 projects (respondents), one A/E contract per project, two hours per contract, 5,260 hours includes signing the contracts and preparation of the contracts using the model form of agreement. 657 hours total annual recordkeeping burden (2,630 projects × .25 hours/contract).

Status of the proposed information collection: Extension.

Authority: The Paperwork Reduction Act of 1995, 44 U.S.C. Chapter 35, as amended.

Dated: June 22, 1998.

Deborah Vincent,

General Deputy, Assistant Secretary for Public and Indian Housing.

BILLING CODE 4210–33–M

U.S. Department of Housing and Urban Development
Office of Public and Indian Housing

OMB Approval No. 2577-0015 (exp.7/31/98)

Model Form of Agreement Between Owner and Design Professional

Model Form of Agreement Between Owner and Design Professional

U. S. Department of Housing and Urban Development
Office of Public and Indian Housing

OMB Approval No. 2577-0015 (exp. 7/31/98)

Public reporting burden for this collection of information is estimated to average 2 hours per response, including the time for reviewing instructions, searching existing data sources, gathering and maintaining the data needed, and completing and reviewing the collection of information. This agency may not conduct or sponsor, and a person is not required to respond to, a collection of information unless that collecton displays a valid OMB control number.

These contracts between a HUD grantee (housing agency (HA)) and an architect/engineer (A/E) for design and construction services do not require either party to submit any materials to HUD. The forms provide a contractual agreement for the services to be provided by the A/E and establishes responsibilities of both parties pursuant to the contract. The regulatory authority is 24 CFR 85.36. These contractual agreements are required by Federal law or regulation pursuant to 24 CFR Part 85.36. Signing of the contracts is required to obtain or retain benefits. The contracts do not lend themselves to confidentiality.

Table of Contents **Page**

Introduction	3
Article A: Services	4
A. 1.0 **Design Professional's Basic Services**	4
A. 1.1 Areas of Professional's Basic Services	4
A. 1.2 Phases and Descriptions of Basic Services	4
A. 1.2.1 Schematic Design/Preliminary Study Phase	4
A. 1.2.2 Design Development Phase	4
A. 1.2.3 Bidding, Construction and Contract Document Phase	4
A. 1.2.4 Bidding and Award Phase	4
A. 1.2.5 Construction Phase	5
A. 1.2.6 Post Completion/Warranty Phase	5
A. 1.3 Time of Performance	5
A. 2.0 **Design Professional's Additional Services**	5
A. 2.1 Description of Additional Services	5
A. 2.2 Written Addendum or Contract Amendment	5
Article B: Compensation and Payment	6
B. 1.0 **Basic Services**	6
B. 1.1 Fixed Fee for Basic Services	6
B. 1.2 Payment Schedule	6
B. 2.0 **Reimbursables**	6
B. 2.1 Reimbursable Expenses	6
B. 2.1.1 Travel Costs	6
B. 2.1.2 Long-Distance Telephone Costs	6
B. 2.1.3 Delivery Costs	6
B. 2.1.4 Reproduction Costs	6
B. 2.1.5 Additional Reimbursables	6
B. 3.0 **Additional Services**	6
B. 3.1 Payment for Additional Services	6
B. 4.0 **Invoicing and Payments**	6
B. 4.1 Invoices	6
B. 4.2 Time of Payment	6
Article C: Responsibilities	6
C. 1.0 **Design Professional's Responsibilities**	6
C. 1.1 Basic Services	6
C. 1.2 Additional Services	6
C. 1.3 General Responsibilities	6
C. 1.4 Designing within Funding Limitations	7
C. 1.5 Compliance with Laws, Codes, Ordinances and Regulations	7
C. 1.6 Seal	7
C. 1.7 Attendance at Conferences	7
C. 2.0 **Owner's Responsibilities**	7
C. 2.1 Information	7
C. 2.2 Notice of Defects	7
C. 2.3 Contract Officer	7

C. 2.4	Duties to Furnish	7
C. 2.4.1	Survey and Property Restrictions	7
C. 2.4.2	Existing Conditions	7
C. 2.4.3	Waivers	7
C. 2.4.4	Minimum Wage Rates	7
C. 2.4.5	Tests	7
C. 2.4.6	Contract Terms	7
Article D:	Contract Administration	8
D. 1.0	**Prohibition of Assignment**	8
D. 1.1	Ownership of Documents	8
D. 1.2	Substitutions	8
D. 1.3	Suspension	8
D. 1.4	Subcontracts	8
D. 1.5	Disputes	8
D. 1.6	Terminations	8
D. 1.7	Insurance	8
D. 1.8	Retention of Rights	8
Article E:	Additional Requirements	8
E. 1.0	**Contract Provisions Required by Federal Law or Owner Contract with the U.S. Department of Housing and Urban Development**	8
E. 1.1	Contract Adjustments	8
E. 1.2	Additional Services	9
E. 1.3	Restrictive Drawings and Specifications	9
E. 1.4	Design Certification	9
E. 1.5	Retention and Inspection of Records	9
E. 1.6	Copyrights and Rights in Data	9
E. 1.7	Conflicts of Interest	9
E. 1.8	Disputes	9
E. 1.9	Termination	9
E. 1.10	Interest of Members of Congress	9
E. 1.11	Limitation of Payments to Influence Certain Federal Transactions	10
E. 1.12	Employment, Training and Contracting Opportunities for Low income Persons, Section 3, HUD Act of 1968	10
E. 1.13	Indian Preference	10
E. 1.14	Clean Air and Water (Applicable to Contracts in excess of $100,000)	11
E. 1.15	Energy Efficiency	11
E. 1.16	Prevailing Wages	11
E. 1.17	Non-applicability of Fair Housing Requirements in Indian Housing Authority Contracts	11
E. 1.18	Prohibition Against Liens	11
Article F:	Other Requirements (If any)	11
Execution of Agreement		11
Addendum (If any)		1

Introduction to Agreement

Agreement made as of the _____ day of _____ in the year of _____

Between the **Owner** (Name & Address)

and the **Design Professional** (Name, Address and Discipline)

For the following **Project** (Include detailed description of Project, Location, Address, Scope and Program Designation)

The Owner and Design Professional agree as set forth below.

Article A: Services

A 1.0 Design Professional's Basic Services

A. 1.1 Areas of Professional's Basic Services. Unless revised in a written addendum or amendment to this Agreement, in planning, designing and administering construction or rehabilitation of the Project, the Design Professional shall provide the Owner with professional services in the following areas:

- Architecture
- Site Planning
- Structural Engineering
- Mechanical Engineering
- Electrical Engineering
- Civil Engineering
- Landscape Architecture
- Cost Estimating
- Construction Contract Administration

A 1.2 Phases and Descriptions of Basic Services.

A. 1.2.1 Schematic Design/Preliminary Study Phase. After receipt of a Notice to Proceed from the Owner, the Design Professional shall prepare and deliver Schematic Design/Preliminary Study Documents. These documents shall consist of a presentation of the complete concept of the Project, including all major elements of the building(s), and site design(s), planned to promote economy both in construction and in administration and to comply with current program and cost limitations. The Design Professional shall revise these documents consistent with the requirements and criteria established by the Owner to secure the Owner's written approval. Additionally, the Design Professional shall make an independent assessment of the accuracy of the information provided by the Owner concerning existing conditions. Documents in this phase shall include:

- Site plan(s)
- Schedule of building types, unit distribution and bedroom count
- Scale plan of all buildings, and typical dwelling units
- Wall sections and elevations
- Outline specifications
- Preliminary construction cost estimates
- Project specific analysis of codes, ordinances and regulations
- Three dimensional line drawings

A. 1.2.2 Design Development Phase. After receipt of written approval of Schematic Design/Preliminary Study Documents, the Design Professional shall prepare and submit to the Owner Design Development Documents. The Design Professional shall revise these documents consistent with the requirements and criteria established by the Owner to secure the Owner's written approval. These documents shall include the following:

- Drawings sufficient to fix and illustrate project scope and character in all essential design elements
- Outline specifications
- Cost estimates and analysis
- Recommendations for phasing of construction
- Site plan(s)
- Landscape plan
- Floor plans
- Elevations, building and wall sections
- Updated three dimensional line drawings
- Engineering drawings

A. 1.2.3 Bidding, Construction and Contract Document Phase. After receipt of the Owner's written approval of Design Development Documents, the Design Professional shall prepare Construction Documents. After consultation with the Owner and Owner's attorney, if requested by the owner, the Design Professional shall also prepare and assemble all bidding and contract documents. The Design Professional shall revise these Bidding, Construction and Contract documents consistent with the requirements and criteria established by the Owner to secure the Owner's written approval. They shall, include in a detailed, manner all work to be performed; all material; workmanship; finishes and equipment required for the architectural, structural, mechanical, electrical, and site work; survey maps furnished by Owner; and direct reproduction of any logs and subsurface soil investigations. These documents shall include:

- Solicitation for Bids
- Form of Contract
- Special Conditions
- General Conditions
- Technical Specifications
- Plans and drawings
- Updated cost estimates

A. 1.2.4 Bidding and Award Phase. After written approval of Bidding, Construction and Contract Documents from the Owner, the Design Professional shall assist in administering the bidding and award of the Construction Contract. This shall include:

- Responding to inquires
- Drafting and issuing addendum approved by Owner
- Attending prebid conference(s)
- Attending public bid openings
- Reviewing and tabulating bids
- Recommending list of eligible bids
- Recommending award
- Altering drawings and specifications as often as required to award within the Estimated Construction Contract Cost

A. 1.2.5 Construction Phase. After execution of the Construction Contract, the Design Professional shall in a prompt and timely manner administer the Construction Contract and all work required by the Bidding, Construction and Contract Documents. The Design Professional shall endeavor to protect the Owner against defects and deficiencies in the execution and performance of the work. The Design Professional shall:

- Administer the Construction Contract.
- Conduct pre-construction conference and attend dispute resolution conferences and other meetings when requested by the Owner.
- Review and approve contractor's shop drawings and other submittals for conformance to the requirements of the contract documents.
- At the Owner's written request, and as Additional Service, procure testing from qualified parties.
- Monitor the quality and progress of the work and furnish a written field report ☐ weekly, ☐ semi monthly, ☐ monthly, or ☐ _____. This service shall be limited to a period amounting to 110% of the construction period as originally established under the construction contract unless construction has been delayed due to the Design professional's failure to properly perform its duties and responsibilities. The Owner may direct additional monitoring but only as Additional Services.
- Require any sub-consultant to provide the services listed in this section where and as applicable and to visit the Project during the time that construction is occurring on the portion of the work related to its discipline and report in writing to the Design Professional.
- Review, approve and submit to Owner the Contractor Requests for Payment.
- Conduct all job meetings and record action in a set of minutes which are to be provided to the Owner.
- Make modifications to Construction Contract Documents to correct errors, clarify intent or to accommodate change orders.
- Make recommendations to Owner for solutions to special problems or changes necessitated by conditions encountered in the course of construction.
- Promptly notify Owner in writing of any defects or deficiencies in the work or of any matter of dispute with the Contractor.
- Negotiate, prepare cost or price analysis for and countersign change orders.
- Prepare written punch list, certificates of completion and other necessary construction close out documents.
- Prepare a set of reproducible record prints of Drawings showing significant changes in the work made during construction, including the locations of underground utilities and appurtenances referenced to permanent surface improvements, based on marked-up prints, drawings and other data furnished by the contractor to the Design Professional.

A. 1.2.6 Post Completion/Warranty Phase. After execution of the Certificate of Completion by the Owner, the Design Professional shall:

- Consult with and make recommendations to Owner during warranties regarding construction, and equipment warranties.
- Perform an inspection of construction work, material, systems and equipment no earlier than nine months and no later than ten months after completion of the construction contract and make a written report to the Owner. At the Owner's request, and by Amendment to the Additional Services section of this contract, conduct additional warranty inspections as Additional Services.
- Advise and assist Owner in construction matters for a period up to eighteen months after completion of the project, but such assistance is not to exceed forty hours of service and one nonwarranty trip away from the place of business of the Design Professional.

A. 1.3 Time of Performance. The Design Professional's schedule for preparing, delivering and obtaining Owner's approval for Basic Services shall be as follows:

- Schematic Design/Preliminary Study Documents within _____ calendar days for the date of the receipt of a Notice to Proceed.
- Design Development Documents within _____ calendar days from the date of receipt of written approval by the Owner of Schematic Design/Preliminary Study documents.
- Bidding, Construction and Contract Documents within _____ calendar days from the date of receipt of written approval by the Owner of Design Development Documents.

A. 2.0 Design Professional's Additional Services

A. 2.1 Description of Additional Services. Additional Services are all those services provided by the Design Professional on the Project for the Owner that are not defined as Basic Services in Article A, Section 1.2 or otherwise required to be performed by the Design Professional under this Agreement. They include major revisions in the scope of work of previously approved drawings, specifications and other documents due to causes beyond the control of the Design Professional and not due to any errors, omissions, or failures on the part of the Design Professional to carry out obligations otherwise set out in this Agreement.

A. 2.2 Written Addendum or Contract Amendment. All additional services not already expressly required by this agreement shall be agreed to through either a written addendum or amendment to this Agreement.

Article B: Compensation and Payment

B. 1.0 Basic Services

B. 1.1 Fixed Fee for Basic Services. The Owner will pay the Design Professional for Basic Services performed as defined by A.1.2, a Fixed Fee (stipulated sum) of $ _____ plus Reimbursable Expenses identified in Article B.2.0. Such

payment shall be compensation for all Basic Services required, performed, or accepted under this Contract.

B. 1.2 Payment Schedule. Progress payments for Basic Services for each phase of work shall be made in proportion to services performed as follows:

Phase	Amount
Schematic Design/Preliminary Study Phase	$ _____
Design Development Phase	$ _____
Bidding, Construction & Contract Document Phase	$ _____
Bidding & Award Phase	$ _____
Construction Phase	$ _____
Post Completion/ Warranty Phase	$ _____
Total Basic Services	$ _____

B. 2.0 Reimbursables

B. 2.1 Reimbursable Expenses. The Owner will pay the Design Professional for the Reimbursable Expenses listed below up to a Maximum Amount of $ _____. Reimbursable Expenses are in addition to the Fixed Fee for Basic Services and are for certain actual expenses incurred by the Design Professional in connection with the Project as enumerated below.

B. 2.1.1 Travel Costs. The reasonable expense of travel costs incurred by the Design Professional when requested by Owner to travel to a location that lies outside of a 45 mile radius of either the Project site, Design Professional's office (s), and Owner's office.

B. 2.1.2 Long Distance Telephone Costs. Long distance telephone calls and long distance telefax costs.

B. 2.1.3 Delivery Costs. Courier services and overnight delivery costs.

B. 2.1.4 Reproduction Costs. Reproduction and postage costs of required drawings, specifications, Bidding and Contract documents, excluding the cost of reproductions for the Design Professional or Subcontractor's own use.

B. 2.1.5 Additional Reimbursables. The Design Professional and Owner may agree in an addendum or amendment to this Agreement to include certain other expenses not enumerated above as Reimbursable Expenses. These Reimbursables shall not be limited by the Maximum Amount agreed to above. A separate Maximum Amount for these Reimbursables shall be established.

B .3.0 Additional Services

B. 3.1 Payment for Additional Services. The Owner will pay the Design Professional only for Additional Services agreed to in an addendum or amendment to this Agreement executed by the Owner and the Design Professional pursuant to A.2. Payment for all such Additional Services shall be in an amount and upon the terms set out in such amendment or addendum and agreed upon by the parties. Each such amendment or addendum shall provide for a fixed price or, where payment for such Additional Services is to be on an hourly basis or other unit pricing method, for a maximum amount; each such amendment or addendum shall also provide for a method of payment, including, at a minimum, whether payment will be made in partial payments or in lump sum and whether it will be based upon percentage of completion or services billed for.

B. 4.0 Invoicing and Payments

B. 4.1 Invoices. All payments shall require a written invoice from the Design Professional. Invoices shall be made no more frequently than on a monthly basis. Payments for Basic Services shall be in proportion to services completed within each phase of work. When requesting such payment, the invoice shall identify the phase and the portion completed. All invoices shall state the Agreement, name and address to which payment shall be made, the services completed and the dates of completion, and whether the invoice requests payment for Basic Services, Reimbursable or Additional Services. Invoices seeking payment for Reimbursable or Additional Services must provide detailed documentation.

B. 4.2 Time of Payment. Upon the Design Professional's proper submission of invoices for work performed or reimbursable expenses, the Owner shall review and, if the work is in conformance with the terms of the Agreement, make payment within thirty days of the Owner's receipt of the invoice.

Article C: Responsibilities

C. 1.0 Design Professional's Responsibilities

C. 1.1 Basic Services. The Design Professionals shall provide the Basic Service set out in Article A.1.0.

C. 1.2 Additional Services. When required under this Agreement or agreed to as set out in A.2.0, the Design Professional shall provide Additional Services on the Project.

C. 1.3 General Responsibilities. The Design Professional shall be responsible for the professional quality, technical accuracy, and coordination of all designs, drawings, specifications, and other services, furnished by the Design Professional under this Agreement. The Owner's review, approval, acceptance of, or payment for Design Professional services shall not be construed as a waiver of any rights under this Agreement or of any cause of action for damages caused by Design Professional's negligent performance under this Agreement. Furthermore, this Agreement does not restrict or limit any rights or remedies otherwise afforded the Owner or Design Professional by law.

C. 1.4 Designing Within Funding Limitations. The Design Professional shall perform services required under this Contract in such a manner so as to cause an award of a Construction Contract(s) that does not exceed (1) $ _____ or (2) an amount to be provided by the Owner in writing to the Design Professional prior to the commencement of Design Professional services. This fixed limit shall be called the Maximum Construction Contract Cost. The amount may be increased by the Owner, but only with written notice to the Design Professional. If the increase results in a change to the scope of work, an amendment to this Agreement will be required. The Design Professional and the Owner may mutually agree to decrease the Maximum Construction Contract Cost, but only by signing a written amendment to this Agreement. Should bids for the Construction Contract(s) exceed the Maximum Con-

struction Contract Cost, the Owner has the right to require the Design Professional to perform redesigns, rebids and other services necessary to cause an award of the Construction Contract within the Maximum Construction Contract Cost without additional compensation or reimbursement.

C. 1.5 Compliance with Laws, Codes, Ordinances and Regulations. The Design Professional shall perform services that conform to all applicable Federal, State and local laws, codes, ordinances and regulations except as modified by any waivers which may be obtained with the approval of the Owner. If the Project is within an Indian reservation, tribal laws, codes and regulations shall be substituted for state and local laws, codes, ordinances and regulations. However, on such a Native American Projects, the Owner may additionally designate that some or all state and local codes shall apply. In some of these circumstances, a model national building code may be selected by the Indian or Native American Owner. The Design Professional shall certify that Contract Documents will conform to all applicable laws, codes, ordinances and regulations. The Design Professional shall prepare all construction documents required for approval by all governmental agencies having jurisdiction over the project. The Design professional shall make all changes in the Bidding and Construction Documents necessary to obtain governmental approval without additional compensation or reimbursement, except in the following situations. If subsequent to the date the Owner issues a notice to proceed, revisions are made to applicable codes or non-federal regulations, the Design Professional shall be entitled to additional compensation and reimbursements for any additional cost resulting from such changes. The Design Professional, however, is obligated to notify the Owner of all significant code or regulatory changes within sixty (60) days of their change, and such notification shall be required in order for the Design Professional to be entitled to any additional compensation or reimbursement.

C. 1.6 Seal. Licensed Design Professionals shall affix their seals and signatures to drawings and specifications produced under this Agreement when required by law or when the project is located on an Indian Reservation.

C. 1.7 Attendance at Conferences. The Design Professional or designated representative shall attend project conferences and meetings involving matters related to basic services covered under this contract. Attendance at community wide meetings shall be considered an additional service.

C. 2.0 Owner's Responsibilities

C. 2.1 Information. The Owner shall provide information regarding requirements for the project, including a program that shall set forth the Owner's objectives and schedule. The Owner shall also establish and update the Maximum Construction Cost. This shall include the Owner's giving notice of work to be performed by the Owner or others and not included in the Construction Contract for the Project. The Design Professional, however, shall be responsible to ascertain and know federal requirements and limitations placed on the Project.

C. 2.2 Notice of Defects. If the Owner observes or otherwise becomes aware of any fault or defect in the construction of the project or nonconformance with the Construction Contract, the Owner shall give prompt written notice of those faults, defects or nonconformance to the Design Professional.

C.2.3 Contract Officer. The Owner shall designate a Contract Officer authorized to act on its behalf with respect to the design and construction of the Project. The Contract Officer shall examine documents submitted by the Design Professional and shall promptly render decisions pertaining to those documents so as to avoid unreasonably delaying the progress of the Design Professional's work.

C. 2.4 Duties to Furnish. The Owner shall provide the Design Professional the items listed below.

C. 2.4.1 Survey and Property Restrictions. The Owner shall furnish topographic, property line and utility information as and where required. The Owner may at its election require the Design Professional to furnish any of these items as an Additional Service.

C. 2.4.2 Existing Conditions. The Owner shall provide the Design Professional any available "as built" drawings of buildings or properties, architect surveys, test reports, and any other written information that it may have in its possession and that it might reasonably assume affects the work.

C. 2.4.3 Waivers. The Owner shall provide the Design Professional information it may have obtained on any waivers of local codes, ordinances, or regulations or standards affecting the design of the Project.

C. 2.4.4 Minimum Wage Rates. The Owner shall furnish the Design Professional the schedule of minimum wage rates approved by the U.S. Secretary of Labor for inclusion in the solicitation and Contract Documents.

C. 2.4.5 Tests. When expressly agreed to in writing by both the Owner and the Design Professional, the Owner shall furnish the Design Professional all necessary structural, mechanical, chemical or other laboratory tests, inspections and reports required for the Project.

C. 2.4.6 Contract Terms. The Owner or its legal counsel may provide the Design Professional text to be incorporated into Bidding and Construction Contract Documents.

Article D: Contract Administration

D. 1.0 Prohibition of Assignment. The Design Professional shall not assign, subcontract, or transfer any services, obligations, or interest in this Agreement without the prior written consent of the Owner. Such consent shall not unreasonably be withheld when such assignment is for financing the Design Professional's performance.

D. 1.1 Ownership of Documents. All drawings, specifications, studies and other materials prepared under this contract shall be the property of the Owner and at the termination or completion of the Design Professional's services shall be promptly delivered to the Owner. The Design Professional shall have no claim for further employment or additional compensation as a result of exercise by the Owner of its full rights of ownership. It is understood, however, that the Design Professional does not represent such data to be suitable for re-use on any other project or for any other purpose. If the Owner re-uses the subject data without the Design Professional's written verification, such re-use will be at the sole risk of the Owner without liability to the Design Professional.

D. 1.2 Substitutions.

A. The Design Professional shall identify in writing principals and professional level employees and shall not substitute or replace principals or professional level employees without the prior approval of the Owner which shall not unreasonably be withheld.

B. The Design Professional's personnel identified below are considered to be essential to the work effort. Prior to diverting or substituting any of the specified individuals, the Design Professional shall notify the Owner reasonably in advance and shall submit justification, including proposed substitutions, in sufficient detail to permit evaluation of the impact on the contract. No diversion or substitution of such key personnel shall be made by the Design professional without the prior written consent of the Owner.

_____

_____

_____

_____

_____

D. 1.3 Suspension. The Owner may give written notice to the Design Professional to suspend work on the project or any part thereof. The Owner shall not be obligated to consider a claim for additional compensation if the Design Professional is given written notice to resume work within 120 calendar days. If notice to resume work is not given within 120 calendar days, the Design Professional shall be entitled to an equitable adjustment in compensation.

D. 1.4 Subcontracts. The Design Professional will cause all applicable provisions of this Agreement to be inserted in all its subcontracts.

D. 1.5 Disputes. In the event of a dispute arising under this Agreement, the Design Professional shall notify the Owner promptly in writing and submit its claim in a timely manner. The Owner shall respond to the claim in writing in a timely manner. The Design Professional shall proceed with its work hereunder in compliance with the instructions of the Owner, but such compliance shall not be a waiver of the Design Professional's rights to make such a claim. Any dispute not resolved by this procedure may be determined by a court of competent jurisdiction or by consent of the Owner and Design Professional by other dispute resolution methods.

D. 1.6 Termination. The Owner may terminate this Agreement for the Owner's convenience or for failure of the Design Professional to fulfill contract obligations. The Owner shall terminate by delivering to the Design Professional a Notice of Termination specifying the reason therefore and the effective date of termination. Upon receipt of such notice, the Design Professional shall immediately discontinue all services affected and deliver to the Owner all information, reports, papers, and other materials accumulated or generated in performing this contract whether completed or in process. If the termination is for convenience of the Owner, the Owner shall be liable only for payment for accepted services rendered before the effective date of termination.

D. 1.7 Insurance. The Design professional shall carry Commercial or Comprehensive General Liability Insurance, Professional Liability Insurance (for a period extending two years past the date of completion of construction), and other insurance as are required by law, all in minimum amounts as set forth below. The Design Professional shall furnish the Owner certificates of insurance and they shall state that a thirty day notice of prior cancellation or change will be provided to the Owner. Additionally, the Owner shall be an additional insured on all Commercial or Comprehensive General liability policies.

Insurance	Limits or Amount

D. 1.8 Retention of Rights. Neither the Owner's review, approval or acceptance of, nor payment for, the services required under this contract shall be construed to operate as a waiver of any rights under this contract or of any cause of action arising out of the performance of this contract, and the Design Professional shall be and remain liable to the Owner in accordance with the applicable law for all damages to the Owner caused by the Design professional 's negligent performance of any of the services furnished under this contract.

Article E: Additional Requirements

E. 1.0 Contract Provisions Required by Federal Law or Owner Contract with the U.S. Department of Housing and Urban Development (HUD).

E. 1.1 Contract Adjustments. Notwithstanding any other term or condition of this Agreement, any settlement or equitable adjustment due to termination, suspension or delays by the Owner shall be negotiated based on the cost principles stated at 48 CFR Subpart 31.2 and conform to the Contract pricing provisions of 24 CFR 85.36 (f).

E. 1.2 Additional Services. The Owner shall perform a cost or price analysis as required by 24 CFR 85.36 (f) prior to the issuance of a contract modification/amendment for Additional Services. Such Additional Services shall be within the general scope of services covered by this Agreement. The Design Professional shall provide supporting cost information in sufficient detail to permit the Owner to perform the required cost or price analysis.

E. 1.3 Restrictive Drawings and Specifications. In accordance with 24 CFR 85.36(c)(3)(i) and contract agreements between the Owner and HUD, the Design Professional shall not require the use of materials, products, or services that unduly restrict competition.

E. 1.4 Design Certification. Where the Owner is required by federal regulations to provide HUD a Design Professional certification regarding the design of the Projects (24 CFR 968.235, 905.260 and 905.639), the Design Professional shall provide such a certification to the Owner.

E. 1.5 Retention and Inspection of Records. Pursuant to 24 CFR 85.26(i)(10) and (11), access shall be given by the Design Professional to the Owner, HUD, the Comptroller General of the United States, or any of their duly authorized representatives, to any books, documents, papers, and records of the Design Professional which are directly pertinent to that specific Contract for the purpose of making an audit, examination, excerpts, and transcriptions. All required records shall be retained for three years after the Owner or Design Professional and other subgrantees make final payments and all other pending matters are closed.

E. 1.6 Copyrights and Rights in Data. HUD has no regulations pertaining to copyrights or rights in data as provided in 24 CFR 85.36. HUD requirements, Article 45 of the General Conditions to the Contract for Construction (form HUD-5370) requires that contractors pay all royalties and license fees. All drawings and specifications prepared by the Design Professional pursuant to this contract will identify any applicable patents to enable the general contractor to fulfil the requirements of the construction contract.

E. 1.7 Conflicts of Interest. Based in part on federal regulations (24 CFR 85.36(b)) and Contract agreement between the Owner and HUD, no employee, officer, or agent of the Owner (HUD grantee) shall participate in selection, or in the award or administration of a contract supported by Federal funds if a conflict of interest, real or apparent, would be involved.

Such a conflict would arise when:

(i) The employee, officer or agent,

(ii) Any member of his or her immediate family,

(iii) His or her partner, or

(iv) An organization that employs, or is about to employ, any of the above, has a financial or other interest in the firm selected for award. The grantee's or subgrantee's officers, employees or agents will neither solicit nor accept gratuities, favors or anything of monetary value from Contractors, or parties to subagreements. Grantees and subgrantees may set minimum rules where the financial interest is not substantial or the gift is an unsolicited item of nominal intrinsic value. To the extent permitted by State or local law or regulations, such standards or conduct will provide for penalties, sanctions, or other disciplinary actions for violations of such standards by the grantee's and subgrantee's officers, employees, or agents or by Contractors or their agents. The awarding agency may in regulation provide additional prohibitions relative to real, apparent, or potential conflicts of interest.

Neither the Owner nor any of its contractors or their subcontractors shall enter into any Contract, subcontract, or agreement, in connection with any Project or any property included or planned to be included in any Project, in which any member, officer, or employee of the Owner, or any member of the governing body of the locality in which the Project is situated, or any member of the governing body of the locality in which the Owner was activated, or in any other public official of such locality or localities who exercises any responsibilities or functions with respect to the Project during his/her tenure or for one year thereafter has any interest, direct or indirect. If any such present or former member, officer, or employee of the Owner, or any such governing body member or such other public official of such locality or localities involuntarily acquires or had acquired prior to the beginning of his/her tenure any such interest, and if such interest is immediately disclosed to the Owner and such disclosure is entered upon the minutes of the Owner, the Owner, with the prior approval of the Government, may waive the prohibition contained in this subsection: Provided, That any such present member, officer, or employee of the Owner shall not participate in any action by the Owner relating to such contract, subcontract, or arrangement.

No member, officer, or employee of the Owner, no member of the governing body of the locality in which the project is situated, no member of the governing body of the locality in which the Owner was activated, and no other public official of such locality or localities who exercises any functions or responsibilities with respect to the project, during his/her tenure or for one year thereafter, shall have any interest, direct or indirect, in this contract or the proceeds thereof.

E. 1.8 Disputes. In part because of HUD regulations (24 CFR 85.36(i)(1)), this Design Professional Agreement, unless it is a small purchase contract, has administrative, contractual, or legal remedies for instances where the Design Professional violates or breaches Agreement terms, and provide for such sanctions and penalties as may be appropriate.

E. 1.9 Termination. In part because of HUD regulations (24 CFR 85.36(i)(2)), this Design Professional Agreement, unless it is for an amount of $10,000 or less, has requirements regarding termination by the Owner when for cause or convenience. These include the manner by which the termination will be effected and basis for settlement.

E. 1.10 Interest of Members of Congress. Because of Contract agreement between the Owner and HUD, no member of or delegate to the Congress of the United States of America or Resident Commissioner shall be admitted to any share or part of this Contract or to any benefit to arise from it.

E. 1.11 Limitation of Payments to Influence Certain Federal Transaction. The Limitation on Use of Appropriated Funds to Influence Certain Federal Contracting and Financial Transactions Act, Section 1352 of Title 31 U.S.C., provides in part that no appropriated funds may be expended by recipient of a federal contract, grant, loan, or cooperative agreement to pay any person, including the Design Professional, for influencing or attempting to influence an officer or employee of Congress in connection with any of the following covered Federal actions: the awarding of any federal contract, the making of any Federal grant, the making of any federal loan, the entering into of any cooperative agreement, and the extension, continuation, renewal, amendment, or modification of any federal contract, grant, loan, or cooperative agreement.

E. 1.12 Employment, Training, and Contracting Opportunities for Low-Income Persons, Section 3 of the Housing and Urban Development Act of 1968.

A. The work to be performed under this contract is subject to the requirements of section 3 of the Housing and Urban Development Act of 1968, as amended, 12 U.S.C. 1701u (section 3). The purpose of section 3 is to ensure that employment and other economic opportunities generated by HUD assistance or HUD-assisted projects covered by section 3, shall, to the greatest

extent feasible, be directed to low- and very low-income persons, particularly persons who are recipients of HUD assistance for housing.

B. The parties to this contract agree to comply with HUD's regulations in 24 CFR part 135, which implement section 3. As evidenced by their execution of this contract, the parties to this contract certify that they are under no contractual or other impediment that would prevent them from complying with the part 135 regulations.

C. The contractor agrees to send to each labor organization or representative of workers with which the contractor has a collective bargaining agreement or other understanding, if any, a notice advising the labor organization or workers' representative of the contractor's commitments under this section 3 clause, and will post copies of the notice in conspicuous places at the work site where both employees and applicants for training and employment positions can see the notice. The notice shall describe the section 3 preference, shall set forth minimum number and job titles subject to hire, availability of apprenticeship and training positions, the qualifications for each; and the name and location of the person(s) taking applications for each of the positions; and the anticipated date the work shall begin.

D. The contractor agrees to include this section 3 clause in every subcontract subject to compliance with regulations in 24 CFR part 135, and agrees to take appropriate action, as provided in an applicable provision of the subcontract or in this section 3 clause, upon a finding that the subcontractor is in violation of the regulations in 24 CFR part 135. The contractor will not subcontract with any subcontractor where the contractor has notice or knowledge that the subcontractor has been found in violation of the regulations in 24 CFR part 135.

E. The contractor will certify that any vacant employment positions, including training positions, that are filled (1) after the contractor is selected but before the contract is executed, and (2) with persons other than those to whom the regulations of 24 CFR part 135 require employment opportunities to be directed, were not filled to circumvent the contractor's obligations under 24 CFR part 135.

F. Noncompliance with HUD's regulations in 24 CFR part 135 may result in sanctions, termination of this contract for default, and debarment or suspension from future HUD assisted contracts.

G. With respect to work performed in connection with section 3 covered Indian housing assistance, section 7(b) of the Indian Self-Determination and Education Assistance Act (25 U.S.C. 450e) also applies to the work to be performed under this contract. Section 7(b) requires that to the greatest extent feasible (i) preference and opportunities for training and employment shall be given to Indians, and (ii) preference in the award of contracts and subcontracts shall be given to Indian organizations and Indian-owned Economic Enterprises. Parties to this contract that are subject to the provisions of section 3 and section 7(b) agree to comply with section 3 to the maximum extent feasible, but not in derogation of compliance with section 7(b).

H. Pursuant to 24 CFR 905.170(b), compliance with Section 3 requirements shall be to the maximum extent consistent with, but not in derogation of compliance with section 7(b) of the Indian Self-Determination and Education Assistance, 25 U.S.C. section 450e(b) when this law is applicable.

E. 1.13 Indian Preference in Indian Housing Authority Contracts. Pursuant to 24 CFR section 905.165 and Federal law, the Design Professional shall provide Indian Preference in its contracting, training, and employment practices when this contract is with an Indian Housing Authority and shall incorporate the following language into all of its subcontracts:

(i) The work to be performed under this contract is on a project subject to section 7(b) of the Indian Self-Determination and Education Assistance Act (25 U.S.C. 450e(b)). Section 7(b) requires that to the greatest extent feasible (i) preference and opportunities for training and employment shall be given to Indians, and (ii) preferences in the award of contracts and subcontracts shall be given to Indian organizations and Indian-owned Economic Enterprises.

(ii) The parties to this contract shall comply with the provisions of said section 7(b) of the Indian Self-determination and Education Assistance Act (25 U.S.C. 450e(b)) and all HUD requirements adopted pursuant to section 7(b).

(iii) In connection with this contract, the parties shall, to the greatest extent feasible, give preference in the award of any subcontracts to Indian organizations and Indian-owned Economic Enterprises, and preferences and opportunities for training and employment to Indians.

(iv) This section 7(b) clause shall be incorporated into every subcontract in connection with the project.

(v) Upon a finding by the IHA or HUD that any party to the contract is in violation of the section 7(b) clause, said party shall at the direction of the IHA, take appropriate remedial action pursuant to the contract.

E. 1.14 Clean Air and Water. (Applicable to contracts in excess of $100,000). Because of 24 CFR 85.36(i)(12) and Federal law, the Design Professional shall comply with applicable standards, orders, or requirements issued under section 306 of the Clean Air Act (42 U.S.C. § 1857h-4 transferred to 42 USC § 7607, section 508 of the Clean Water Act (33 U.S.C. § 1368), Executive Order 11738, and Environmental Protection Agency regulations (40 CFR part 15), on all contracts, subcontracts, and subgrants of amounts in excess of $100,000.

E. 1.15 Energy Efficiency. Pursuant to Federal regulations (24 C.F.R 85.36(i)(13)) and Federal law, except when working on an Indian housing authority Project on an Indian reservation, the Design Professional shall comply with the mandatory standards and policies relating to energy efficiency which are contained in the state energy conservation plan issued in compliance with the Energy Policy and Conservation Act (Pub. L. 94-163 codified at 42 U.S.C.A. § 6321 et. seq.).

E. 1.16 Prevailing Wages. In accordance with Section 12 of the U.S. Housing Act of 1937 (42 U.S.C. 1437j) the Design Professional shall pay not less than the wages prevailing in the locality, as determined by or adopted (subsequent to a determination under applicable State or local law) by the Secretary of HUD, to all architects, technical engineers, draftsmen, and technicians.

E. 1.17 Non-applicability of Fair Housing Requirements in Indian Housing Authority Contracts. Pursuant to 24 CFR section 905.115(b) title VI of the Civil Rights Act of 1964 (42 U.S.C. 2000d-2000d-4), which prohibits discrimination on the basis of race, color or national origin in federally assisted programs, and the Fair Housing Act (42 U.S.C. 3601-3620), which prohibits discrimination based on race, color, religion, sex, national origin, handicap, or familial status in the sale or rental of housing do not apply to Indian Housing Authorities established by exercise of a Tribe's powers of self-government.

E. 1.18Prohibition Against Liens. The Design professional is Prohibited from placing a lien on the Owner's property. This prohibition shall be placed in all design professional subcontracts.

Article F: Other Owner Requirements (if any)

(Continue on additional pages as necessary)

This Agreement is entered into as of the day and year first written above.

Owner	Design Professional
_____	_____
(Housing Authority)	(Firm)
_____	_____
(Signature)	(Signature)
_____	_____
(Print Name)	(Print Name)
_____	_____
(Print Title)	(Print Title)

Addendum (If any)
(Additional Services and other modifications)

This is an Addendum to a Standard Form of Agreement between Owner and Design Professional signed and dated the _____ day of _____ in the year of _____ between the Owner _____ and Design Professional _____ on Project _____. The parties to that Agreement agree to modify the Agreement by the above delineated Additional Services and modifications. This Addendum is dated this _____ day of _____ in the year of _____.

Owner	Design Professional
_____	_____
(Housing Authority)	(Firm)
_____	_____
(Signature)	(Signature)
_____	_____
(Print Name)	(Print Name)
_____	_____
(Print Title)	(Print Title)

U.S. Department of Housing and Urban Development
Office of Public and Indian Housing

OMB Approval No. 2577-0015 (exp.7/31/98)

Contract Provisions Required by Federal Law or Owner Contract with the U.S. Department of Housing and Urban Development

Contract Provisions Required by Federal Law or Owner Contract with the U.S. Department of Housing and Urban Development

U. S. Department of Housing and Urban Development
Office of Public and Indian Housing

Public reporting burden for this collection of information is estimated to average 2 hours per response, including the time for reviewing instructions, searching existing data sources, gathering and maintaining the data needed, and completing and reviewing the collection of information. This agency may not conduct or sponsor, and a person is not required to respond to, a collection of information unless that collecton displays a valid OMB control number.

These contracts between a HUD grantee (housing agency (HA)) and an architect/engineer (A/E) for design and construction services do not require either party to submit any materials to HUD. The forms provide a contractual agreement for the services to be provided by the A/E and establishes responsibilities of both parties pursuant to the contract. The regulatory authority is 24 CFR 85.36. These contractual agreements are required by Federal law or regulation pursuant to 24 CFR Part 85.36. Signing of the contracts is required to obtain or retain benefits. The contracts do not lend themselves to confidentiality.

1.0 Contract Provisions Required by Federal Law or Owner Contract with the U.S. Department of Housing and Urban Development (HUD).

1.1 Contract Adjustments. Notwithstanding any other term or condition of this Agreement, any settlement or equitable adjustment due to termination, suspension or delays by the Owner shall be negotiated based on the cost principles stated at 48 CFR Subpart 31.2 and conform to the Contract pricing provisions of 24 CFR 85.36 (f).

1.2 Additional Services. The Owner shall perform a cost or price analysis as required by 24 CFR 85.36 (F) prior to the issuance of a contract modification/amendment for Additional Services. Such Additional Services shall be within the general scope of services covered by this Agreement. The Design Professional shall provide supporting cost information in sufficient detail to permit the Owner to perform the required cost or price analysis.

1.3 Restrictive Drawings and Specifications. In accordance with 24 CFR 85.36(c)(3)(i) and contract agreements between the Owner and HUD, the Design Professional shall not require the use of materials, products, or services that unduly restrict competition.

1.4 Design Certification. Where the Owner is required by federal regulations to provide HUD a Design Professional certification regarding the design of the Projects (24 CFR 968.235, 905.260 and 905.639), the Design Professional shall provide such a certification to the Owner.

1.5 Retention and Inspection of Records. Pursuant to 24 CFR 85.26(i)(10) and (11), access shall be given by the Design Professional to the Owner, HUD, the Comptroller General of the United States, or any of their duly authorized representatives, to any books, documents, papers, and records of the Design Professional which are directly pertinent to that specific Contract for the purpose of making an audit, examination, excerpts, and transcriptions. All required records shall be retained for three years after the Owner or Design Professional and other subgrantees make final payments and all other pending matters are closed.

1.6 Copyrights and Rights in Data. HUD has no regulations pertaining to copyrights or rights in data as provided in 24 CFR 85.36. HUD requirements, Article 45 of the General Conditions to the Contract for Construction (form HUD-5370) requires that contractors pay all royalties and license fees. All drawings and specifications prepared by the Design Professional pursuant to this contract will identify any applicable patents to enable the general contractor to fulfil the requirements of the construction contract.

1.7 Conflicts of Interest. Based in part on federal regulations (24 CFR 85.36(b)) and Contract agreement between the Owner and HUD, no employee, officer, or agent of the Owner (HUD grantee) shall participate in selection, or in the award or administration of a contract supported by Federal funds if a conflict of interest, real or apparent, would be involved.

Such a conflict would arise when:

(i) The employee, officer or agent,

(ii) Any member of his or her immediate family,

(iii) His or her partner, or

(iv) An organization that employs, or is about to employ, any of the above, has a financial or other interest in the firm selected for award. The grantee's or subgrantee's officers, employees or agents will neither solicit nor accept gratuities, favors or anything of monetary value from Contractors, or parties to sub-agreements. Grantees and subgrantees may set minimum rules where the financial interest is not substantial or the gift is an unsolicited item of nominal intrinsic value. To the extent permitted by State or local law or regulations, such standards or conduct will provide for penalties, sanctions, or other disciplinary actions for violations of such standards by the grantee's and subgrantee's officers, employees, or agents or by Contractors or their agents. The awarding agency may in regulation provide additional prohibitions relative to real, apparent, or potential conflicts of interest.

Neither the Owner nor any of its contractors or their subcontractors shall enter into any Contract, subcontract, or agreement, in connection with any Project or any property included or planned to be included in any Project, in which any member, officer, or employee of the Owner, or any member of the governing body of the locality in which the Project is situated, or any member of the governing body of the locality in which the Owner was activated, or in any other public official of such locality or localities who exercises any responsibilities or functions with respect to the Project during his/her tenure or for one year thereafter has any interest, direct or indirect. If any such present or former member, officer, or employee of the Owner, or any such governing body member or such other public official of such locality or localities involuntarily acquires or had acquired prior to the beginning of his/her tenure any such interest, and if such interest is immediately disclosed to the Owner and such disclosure is entered upon the minutes of the Owner, the Owner, with the prior approval of the Government, may waive the prohibition contained in this subsection: Provided, That any such present

member, officer, or employee of the Owner shall not participate in any action by the Owner relating to such contract, subcontract, or arrangement.

No member, officer, or employee of the Owner, no member of the governing body of the locality in which the project is situated, no member of the governing body of the locality in which the Owner was activated, and no other public official of such locality or localities who exercises any functions or responsibilities with respect to the project, during his/her tenure or for one year thereafter, shall have any interest, direct or indirect, in this contract or the proceeds thereof.

1.8 Disputes. In part because of HUD regulations (24 CFR 85.36(i)(1)), this Design Professional Agreement, unless it is a small purchase contract, has administrative, contractual, or legal remedies for instances where the Design Professional violates or breaches Agreement terms, and provide for such sanctions and penalties as may be appropriate.

1.9 Termination. In part because of HUD regulations (24 CFR 85.36(i)(2)), this Design Professional Agreement, unless it is for an amount of $10,000 or less, has requirements regarding termination by the Owner when for cause or convenience. These include the manner by which the termination will be effected and basis for settlement.

1.10 Interest of Members of Congress. Because of Contract agreement between the Owner and HUD, no member of or delegate to the Congress of the United States of America or Resident Commissioner shall be admitted to any share or part of this Contract or to any benefit to arise from it.

1.11 Limitation of Payments to Influence Certain Federal Transaction. The Limitation on Use of Appropriated Funds to Influence Certain Federal Contracting and Financial Transactions Act, Section 1352 of Title 31 U.S.C., provides in part that no appropriated funds may be expended by recipient of a federal contract, grant, loan, or cooperative agreement to pay any person, including the Design Professional, for influencing or attempting to influence an officer or employee of Congress in connection with any of the following covered Federal actions: the awarding of any federal contract, the making of any Federal grant, the making of any federal loan, the entering into of any cooperative agreement, and the extension, continuation, renewal, amendment, or modification of any federal contract, grant, loan, or cooperative agreement.

1.12 Employment, Training, and Contracting Opportunities for Low-Income Persons, Section 3 of the Housing and Urban Development Act of 1968.

A. The work to be performed under this contract is subject to the requirements of section 3 of the Housing and Urban Development Act of 1968, as amended, 12 U.S.C. 1701u (section 3). The purpose of section 3 is to ensure that employment and other economic opportunities generated by HUD assistance or HUD-assisted projects covered by section 3, shall, to the greatest extent feasible, be directed to low- and very low-income persons, particularly persons who are recipients of HUD assistance for housing.

B. The parties to this contract agree to comply with HUD's regulations in 24 CFR part 135, which implement section 3. As evidenced by their execution of this contract, the parties to this contract certify that they are under no contractual or other impediment that would prevent them from complying with the part 135 regulations.

C. The contractor agrees to send to each labor organization or representative of workers with which the contractor has a collective bargaining agreement or other understanding, if any, a notice advising the labor organization or workers' representative of the contractor's commitments under this section 3 clause, and will post copies of the notice in conspicuous places at the work site where both employees and applicants for training and employment positions can see the notice. The notice shall describe the section 3 preference, shall set forth minimum number and job titles subject to hire, availability of apprenticeship and training positions, the qualifications for each; and the name and location of the person(s) taking applications for each of the positions; and the anticipated date the work shall begin.

D. The contractor agrees to include this section 3 clause in every subcontract subject to compliance with regulations in 24 CFR part 135, and agrees to take appropriate action, as provided in an applicable provision of the subcontract or in this section 3 clause, upon a finding that the subcontractor is in violation of the regulations in 24 CFR part 135. The contractor will not subcontract with any subcontractor where the contractor has notice or knowledge that the subcontractor has been found in violation of the regulations in 24 CFR part 135.

E. The contractor will certify that any vacant employment positions, including training positions, that are filled (1) after the contractor is selected but before the contract is executed, and (2) with persons other than those to whom the regulations of 24 CFR part 135 require employment opportunities to be directed, were not filled to circumvent the contractor's obligations under 24 CFR part 135.

F. Noncompliance with HUD's regulations in 24 CFR part 135 may result in sanctions, termination of this contract for default, and debarment or suspension from future HUD assisted contracts.

G. With respect to work performed in connection with section 3 covered Indian housing assistance, section 7(b) of the Indian Self-Determination and Education Assistance Act (25 U.S.C. 450e) also applies to the work to be performed under this contract. Section 7(b) requires that to the greatest extent feasible (i) preference and opportunities for training and employment shall be given to Indians, and (ii) preference in the award of contracts and subcontracts shall be given to Indian organizations and Indian-owned Economic Enterprises. Parties to this contract that are subject to the provisions of section 3 and section 7(b) agree to comply with section 3 to the maximum extent feasible, but not in derogation of compliance with section 7(b).

H. Pursuant to 24 CFR 905.170(b), compliance with Section 3 requirements shall be to the maximum extent consistent with, but not in derogation of compliance with section 7(b) of the Indian Self-Determination and Education Assistance, 25 U.S.C. section 450e(b) when this law is applicable.

1.13 Indian Preference in Indian Housing Authority Contracts. Pursuant to 24 CFR section 905.165 and Federal law, the Design Professional shall provide Indian Preference in its contracting, training, and employment practices when this contract is with an Indian Housing Authority and shall incorporate the following language into all of its subcontracts:

(i) The work to be performed under this contract is on a project subject to section 7(b) of the Indian Self-Determination and Education Assistance Act (25 U.S.C. 450e(b)). Section 7(b) requires that to the greatest extent feasible (i) preference and opportunities for training and employment shall be given to Indians, and (ii) preferences in the award of contracts and subcontracts shall be given to Indian organizations and Indian-owned Economic Enterprises.

(ii) The parties to this contract shall comply with the provisions of said section 7(b) of the Indian Self-determination and Education Assistance Act (25 U.S.C. 450e(b)) and all HUD requirements adopted pursuant to section 7(b).

(iii) In connection with this contract, the parties shall, to the greatest extent feasible, give preference in the award of any subcontracts to Indian organizations and Indian-owned Economic Enterprises, and preferences and opportunities for training and employment to Indians.

(iv) This section 7(b) clause shall be incorporated into every subcontract in connection with the project.

(v) Upon a finding by the IHA or HUD that any party to the contract is in violation of the section 7(b) clause, said party shall at the direction of the IHA, take appropriate remedial action pursuant to the contract.

1.14 Clean Air and Water. (Applicable to contracts in excess of $100,000). Because of 24 CFR 85.36(i)(12) and federal law, the Design Professional shall comply with applicable standards, orders, or requirements issued under section 306 of the Clean Air Act (42 U.S.C. § 1857h-4 transferred to 42 USC § 7607, section 508 of the Clean Water Act (33 U.S.C. § 1368), Executive Order 11738, and Environmental Protection Agency regulations (40 CFR part 15), on all contracts, subcontracts, and subgrants of amounts in excess of $100,000.

1.15 Energy Efficiency. Pursuant to Federal regulations (24 C.F.R 85.36(i)(13)) and Federal law, except when working on an Indian housing authority Project on an Indian reservation, the Design Professional shall comply with the mandatory standards and policies relating to energy efficiency which are contained in the state energy conservation plan issued in compliance with the Energy Policy and Conservation Act (Pub. L. 94-163 codified at 42 U.S.C.A. § 6321 et. seq.).

1.16 Prevailing Wages. In accordance with Section 12 of the U.S. Housing Act of 1937 (42 U.S.C. 1437j) the Design Professional shall pay not less than the wages prevailing in the locality, as determined by or adopted (subsequent to a determination under applicable State or local law) by the Secretary of HUD, to all architects, technical engineers, draftsmen, and technicians.

1.17 Non-applicability of Fair Housing Requirements in Indian Housing Authority Contracts. Pursuant to 24 CFR section 905.115(b) title VI of the Civil Rights Act of 1964 (42 U.S.C. 2000d-2000d-4), which prohibits discrimination on the basis of race, color or national origin in federally assisted programs, and the Fair Housing Act (42 U.S.C. 3601-3620), which prohibits discrimination based on race, color, religion, sex , national origin, handicap, or familial status in the sale or rental of housing do not apply to Indian Housing Authorities established by exercise of a Tribe's powers of self-government.

1.18 Prohibition Against Liens. The Design professional is Prohibited from placing a lien on the Owner's property. This prohibition shall be placed in all design professional subcontracts.

[FR Doc. 98–17277 Filed 6–26–98; 8:45 am]
BILLING CODE 4210–33–C

DEPARTMENT OF HOUSING AND URBAN DEVELOPMENT

[Docket No. FR–4369–N–05]

Announcement of OMB Approval Number for Environmental Review Procedures for Entities Assuming HUD Environmental Responsibilities

AGENCY: Office of the Assistant Secretary for Community Planning and Development, HUD.

ACTION: Announcement of OMB approval number.

SUMMARY: The purpose of this notice is to announce the OMB approval number for the collection of information pertaining to Environmental Review Procedures for Entities Assuming HUD Environmental Responsibilities—24 CFR part 58 (Final Rule).

FOR FURTHER INFORMATION CONTACT: Richard Broun, Director, Office of Community Planning and Development, Department of Housing and Urban Development, 451 7th Street, Southwest, Washington, DC 20410, telephone (202) 708–1201, ext. 4465. This is not a toll-free number.

SUPPLEMENTARY INFORMATION: In accordance with the Paperwork Reduction Act of 1995 (44 U.S.C. Chapter 35, as amended), this notice advises that OMB has responded to the Department's request for approval of the information collection pertaining to 24 CFR part 58, Environmental Review Procedures for Entities Assuming HUD Environmental Responsibilities.

The OMB approval number for this information collection is 2506–0087, which expires on June 30, 2001.

An agency may not conduct or sponsor, and a person is not required to respond to, a collection of information, unless it displays a currently valid OMB control number.

Dated: June 23, 1998.

Fred Karnas,

Deputy Assistant Secretary for Economic Development.

[FR Doc. 98–17275 Filed 6–26–98; 8:45 am]

BILLING CODE 4210–29–M

DEPARTMENT OF THE INTERIOR

Fish and Wildlife Service

Notice of Availability of a Revised Draft Recovery Plan for the Mobile River Basin Aquatic Ecosystem for Review and Comment

AGENCY: U.S. Fish and Wildlife Service, Interior.

ACTION: Notice of document availability and public comment period.

SUMMARY: The U.S. Fish and Wildlife Service (Service) announces the availability for public review of a revised draft recovery plan for the Mobile River Basin aquatic ecosystem, a drainage basin encompassing much of south and central Alabama, with portions extending into east Mississippi, northwest Georgia, and southeast Tennessee. The revised draft plan addresses the recovery objectives, criteria, and tasks for 15 freshwater species, including 3 fish, 11 mussels, and 1 aquatic snail, and complements recovery plans previously developed for another 17 freshwater species within the Mobile River Basin, including 2 turtles, 7 fish, 6 mussels, and 2 plants. The Service solicits review and comment from the public on this revised draft plan.

DATES: Comments on the draft recovery plan must be received on or before September 1, 1998 to receive consideration by the Service.

ADDRESSES: Persons wishing to review the draft recovery plan may obtain a copy by contacting the Jackson Field Office, U.S. Fish and Wildlife Service, 6578 Dogwood View Parkway, Suite A, Jackson, Mississippi 39213. Written comments and materials regarding the plan should be addressed to the Field Supervisor at the above address. Comments and materials received are available on request for public inspection, by appointment, during normal business hours at the above address.

FOR FURTHER INFORMATION CONTACT: Paul Hartfield at the above address (601/965–4900, ext. 25).

SUPPLEMENTARY INFORMATION:

Background

Restoring endangered or threatened animals and plants to the point where they are again secure, self-sustaining members of their ecosystems is a primary goal of the Service's endangered species program. To help guide the recovery effort, the Service is working to prepare recovery plans for most of the listed species native to the United States. Recovery plans describe actions considered necessary for conservation of the species, establish criteria for the recovery levels for downlisting or delisting listed species, and estimate time and cost for implementing the recovery measures needed.

The Endangered Species Act of 1973, as amended (16 U.S.C. 1531 *et seq.*) (Act), requires the development of recovery plans for listed species unless such a plan would not promote the conservation of a particular species. Section 4(f) of the Act, as amended in 1988, requires that public notice and an opportunity for public review and comment be provided during recovery plan development. The Service will consider all information presented during a public comment period prior to approval of each new or revised recovery plan. Substantive technical comments will result in changes to the plan. Substantive comments regarding recovery plan implementation may not necessarily result in changes to the recovery plan, but will be forwarded to appropriate Federal or other entities so that they can take these comments into account during the course of implementing recovery actions. Individualized responses to comments will not be provided.

The draft Mobile River Basin Aquatic Ecosystem Recovery Plan was initially released for public review and comment on September 28, 1994. The current revised draft plan evolved from four years of information sharing, discussion, and review of aquatic resources and conflicts by a group of Mobile River Basin stakeholders that included private landowners, industry representatives, environmental organizations, and State and Federal agencies.

The revised draft recovery plan provides recovery objectives and criteria for the goldline darter (*Percina aurolineata*), Cherokee darter (*Etheostoma scotti*), Etowah darter (*Etheostoma etowahae*), Alabama moccasinshell (*Medionidus acutissimus*), orange-nacre mucket (*Lampsilis perovalis*), fine-lined pocketbook (*Lampsilis altilis*), southern acornshell (*Epioblasma othcaloogensis*), upland combshell (*Epioblasma metastriata*), Coosa moccasinshell (*Medionidus parvulus*), ovate clubshell (*Pleurobema perovatum*), southern clubshell (*Pleurobema decisum*), dark pigtoe (*Pleurobema furvum*), southern pigtoe (*Pleurobema georgianum*), triangular kidneyshell (*Ptychobranchus greeni*), and the tulotoma snail (*Tulotoma magnifica*). The goldline darter was listed as threatened in 1992 due to a suspected decline in historic range, population fragmentation and isolation, and existing threats to extant populations due to water quality degradation. The threatened Cherokee darter and endangered Etowah darter were listed in 1994 because of nonpoint source pollution threats to limited stream populations. In 1993, eight of the 11 mussels were listed as endangered, and three as threatened due to habitat loss and fragmentation resulting from

impoundment and their vulnerability to nonpoint source pollution and other threats. The tulotoma snail was listed as endangered in 1991 due to the loss of more than 90 percent of its historic habitat, and the isolation and vulnerability of surviving populations.

The recovery objectives of the revised draft plan are to protect the Basin's native aquatic fauna and flora by achieving higher levels of innovative land and water stewardship; reclassify and delist the tulotoma snail; delist the goldline, Etowah, and Cherokee darters; and prevent the extinction of the eight endangered mussels and the continued decline of the three threatened mussels. Actions needed to achieve these objectives include protection of fluvial habitats and water quality, development of mitigation strategies for in stream habitats, community based watershed stewardship planning and action, concerted public education efforts, and basic research on freshwater species endemic to the basin.

This revised plan is being submitted for technical/agency review. After consideration of comments received during the review period, it will be submitted for final approval.

Public Comments Solicited

The Service solicits written comments on the recovery plan described. All comments received by the date specified above will be considered prior to approval of the plan.

Authority

The authority for this action is section 4(f) of the Endangered Species Act, 16 U.S.C. 1533(f).

Dated: June 22, 1998.

Robert Bowker,

Field Supervisor.

[FR Doc. 98–17180 Filed 6–26–98; 8:45 am]

BILLING CODE 4310–55–P

DEPARTMENT OF THE INTERIOR

Bureau of Land Management

[AZ–020–5410–A159; AZA 30673]

Application for Conveyance of Federally-Owned Mineral Interests, Arizona

AGENCY: Bureau of Land Management, Interior.

ACTION: Notice.

SUMMARY: An application for the conveyance of federally-owned minerals has been filed under the provisions of 43 U.S.C. 1720 for the following described lands:

Gila and Salt River Meridian, Arizona

T. 6 N., R. 4 E.,
Sec. 11, NW¼.
containing 160 acres.

Upon publication in the **Federal Register**, the mineral interests owned by the United States in the land described above will be segregated from appropriation under the public land laws, including the mining laws. The segregation will terminate upon issuance of a patent for the mineral interests, rejection of the application, or 2 years from the date of publication, whichever occurs first.

FOR FURTHER INFORMATION CONTACT: Neel McBride, (602) 417–9353, Arizona State Office, 222 N. Central Ave., Phoenix, Arizona 85004–2203.

Dated: June 16, 1998.

Mary Jo Yoas,

Supervisor, Lands and Minerals Operations.

[FR Doc. 98–17155 Filed 6–26–98; 8:45 am]

BILLING CODE 4310–32–P

DEPARTMENT OF THE INTERIOR

Bureau of Land Management

[NV–010–1430–01; N–56882]

Termination of Segregative Effect, Portion of Airport Lease N–56882

AGENCY: Bureau of Land Management, Interior.

ACTION: Notice.

SUMMARY: This action partially terminates a segregative effect on airport lease N–56882 held by the Eureka County Board of Commissioners. The land will be opened to the operation of the public land laws, including location and entry under the mining laws.

EFFECTIVE DATE: July 29, 1998.

FOR FURTHER INFORMATION CONTACT: Kenneth Nelson, Elko Field Office, 3900 E. Idaho St., Elko, Nevada 89801, 702–753–0200

SUPPLEMENTARY INFORMATION: The segregative effect for the affected lands was made on July 21, 1966, pursuant to the Act of May 24, 1928, as amended. Partial termination of the segregative effect will allow conveyance by direct sale of the affected land to the Eureka County Board of Commissioners in order to alleviate a situation of inadvertent encroachment by adjacent property owners.

The segregative effect is hereby terminated for the following described land:

Mount Diablo Meridian, Nevada

T. 29 N., R. 48 E.,
Sec. 4,. Lots 14, 15, 18.

The area described contains 5.13 acres in Eureka County.

1. At 9 a.m. on July 29, 1998, the land described above will be opened to the operation of the public land laws generally, subject to valid existing rights, the provision of existing withdrawals, other segregations of record, and the requirements of applicable law.

2. At 9 a.m. on July 29, 1998, the land described above will be opened to location and entry under the United States mining laws, subject to valid existing rights, the provisions of existing withdrawals, other segregations of record, and the requirements of applicable law. Appropriation of any of the land described in this order under the general mining laws prior to the date and time of restoration is unauthorized. Any such attempted appropriation, including attempted adverse possession under 30 U.S.C. 38 (1988), shall vest no rights against the United States. Acts required to establish a location and to initiate a right of possession are governed by State law where not in conflict with Federal law. The Bureau of Land Management will not intervene in disputes between rival locators over possessory rights since Congress has provided for such determinations in local courts.

Dated: June 16, 1998.

David J. Vandenberg,

Acting Field Manager.

[FR Doc. 98–17156 Filed 6–26–98; 8:45 am]

BILLING CODE 4310–HC–P

DEPARTMENT OF THE INTERIOR

National Park Service

National Register of Historic Places; Notification of Pending Nominations

Nominations for the following properties being considered for listing in the National Register were received by the National Park Service before June 20, 1998. Pursuant to § 60.13 of 36 CFR Part 60 written comments concerning the significance of these properties under the National Register criteria for evaluation may be forwarded to the National Register, National Park Service, 1849 C St. NW, NC400, Washington, DC 20240. Written comments should be submitted by July 14, 1998.

Carol D. Shull,

Keeper of the National Register.

ARKANSAS

Benton County

Edwards Grocery, 20 S. Second St., Rogers, 98000852

Cross County

Block, Isaac, House, 404 E. Hamilton St., Wynne, 98000851

COLORADO

Alamosa County

Sacred Heart Catholic Church, 727 4th St., Alamosa, 98000855

Jefferson County

Arvada Downtown, Roughly bounded by Ralston Rd., Teller Rd., Grandview Ave. and Yukon St., Arvada, 98000854

Larimer County

Edgemont, 1861 Mary's Lake Rd., Estes Park, 98000853

FLORIDA

Clay County

Clarke, William, Estate, (Orange Park, Florida MPS), 1039–1057 Kingsley Ave., Orange Park, 98000862
Green, Joseph, House (Orange Park, Florida MPS), 531 McIntosh Ave., Orange Park, 98000860
Helffrich, William, House (Orange Park, Florida MPS), 1200 Plainfield Ave., Orange Park, 98000857
Orange Park Elementary School (Orange Park, Florida MPS), 1401 Plainfield Ave., Orange Park, 98000858
Orange Park Negro Elementary School (Orange Park, Florida MPS), 440 McIntosh Ave., Orange Park, 98000856
River Road Historic District (Orange Park, Florida MPS), Jct. of River Rd. and Stiles Ave., Orange Park, 98000861
Westcott, William, House (Orange Park, Florida MPS), 443 Stiles Ave., Orange Park, 98000859

Orange County

Russell, Annie, Theatre, 1000 Holt Ave., Winter Park, 98000863

IOWA

Emmet County

Ellsworth Ranch Bridge (Historic Highway Bridges of Iowa MPS), 130th St., over E fork of Des Moines R., Armstrong vicinity, 98000869

Fayette County

Maple View Sanitarium, 100 N. Walnut St., West Union, 98000866

Polk County

Highland Park Historic Business District at Euclid and Sixth Avenues, Roughly jct. of Euclis Ave. and Sixth Ave., Des Moines, 98000867

Shelby County

Chicago, Rock Island and Pacific Railroad Stone Arch Viaduct, 0.5 mi. NW of jct. of St. F66 and Hackberry Rd., Shelby vicinity, 98000870

Story County

Briggs Terrace, 1204 H Ave., Nevada, 98000868

Woodbury County

Burkam, Elzy G., House, 1525 Douglas St., Sioux City, 98000864
Martin, T.S., and Company, Jct. of 4th St. and Nebraska St., Sioux City, 98000865

MASSACHUSETTS

Plymouth County

Revere Beach Reservation Historic District, Roughly bounded by Eliot Circle, Revere Beach Blvd., Northern Circle, and Atlantic Ocean, Revere, 98000871

MINNESOTA

Dakota County

Ramsey Mill and Old Mill Park, Jct of 18th St. and Vermillion R., Hastings, 98000872

NEW YORK

Warren County

Wiawaka Holiday House, NY 9L, SE of Lake George, Lake George, 98000874

NORTH CAROLINA

Chatham County

Siler City High School, 119 S. Third Ave., Siler City, 98000873

TENNESSEE

Monroe County

Owen, Charles, House, 1019 Mayes St., Sweetwater, 98000875

TEXAS

Atascosa County

Korus Farmstead, US–281 at Farm-to-Market Rd. 536, Leming vicinity, 98000876

WISCONSIN

Dane County

Fritz, John, Farmstead, 642 Fritz Rd., Montrose, 98000879

Green Lake County

McClelland—Kasuboski House, W404 W. Hillside Rd., Berlin, 98000878

Manitowoc County

Green Bay Road Bridge, Mill St. at Manitowoc R., Manitowoc Rapids, 98000877

[FR Doc. 98–17272 Filed 6–26–98; 8:45 am]

BILLING CODE 4310–70–U

AGENCY FOR INTERNATIONAL DEVELOPMENT

Malaria Vaccine Development Program Federal Advisory Committee; Meeting

Pursuant to the Federal Advisory Committee Act, notice is hereby given of a meeting of the USAID Malaria Vaccine Development Program (MVDP) Federal Advisory Committee. The meeting will be held from 8:30 a.m.to 5 p.m. on July 8, 1998 and from 8:30 a.m. to 12 noon on July 10,1998 at the Conference Room of the Environmental Health Project located in Suite 300, 1611 North Kent Street in Arlington, Virginia 22209–2111.

The agenda will concentrate on the activities of the MVDP over the past six months and plans for the next year.

The meeting will be open to the public unless it is necessary to discuss procurement sensitive information; should this be the case, it will be announced and the meeting closed at the appropriate time. Any interested person may attend the meeting, may file written statements with the Committee before or after the meeting, or present any oral statements in accordance with procedures established by the Committee, to the extent that time available for the meeting permits.

Those wishing to attend the meeting or to obtain additional information about the USAID MVDP should contact Carter Diggs, the designated Federal Officer for the USAID MDP Federal Advisory Committee at the Office of Health and Nutrition, USAID/G/PHN/HN/EH, Room 3.07–013, 3rd floor, RRB, Washington, DC 20523–3700, telephone (202) 712–5728, Fax (202) 216–3702. or e-mail: cdiggs@usaid.gov.

Carter Diggs,

USAID Designated Federal Officer (Technical Advisor, Malaria Vaccine Development Program).

[FR Doc. 98–17231 Filed 6–26–98; 8:45 am]

BILLING CODE 6116–01–M

INTERNATIONAL DEVELOPMENT COOPERATION AGENCY

Overseas Private Investment Corporation; Agency Report Form Under OMB Review

AGENCY: Overseas Private Investment Corporation, IDCA.

ACTION: Request for comments.

SUMMARY: Under the provisions of the Paperwork Reduction Act (44 U.S.C. Chapter 35), agencies are required to publish a Notice in the Federal Register notifying the public that the Agency has prepared an information collection request for OMB review and approval and has requested public review and comment on the submission. OPIC published its first Federal Register Notice on this information collection request on April 22, 1998, in 63 FR 19946, at which time a 60-calendar day comment period was announced. This comment period ended June 22, 1998. No comments were received in response to this notice. This information collection submission has now been submitted to OMB for review. Comments are again being solicited on the need for the information, its practical utility, the accuracy of the Agency's burden estimate, and on ways

to minimize the reporting burden, including automated collection techniques and uses of other forms of technology. The proposed form under review is summarized below.

DATES: Comments must be received within 30-calendar days of this Notice.

ADDRESSES: Copies of the subject form and the request for review submitted to OMB may be obtained from the Agency Submitting Officer. Comments on the form should be submitted to the OMB Reviewer.

FOR FURTHER INFORMATION CONTACT:

OPIC Agency Submitting Officer: Carol Brock, Records Manager, Overseas Private Investment Corporation 1100 New York Avenue, N.W., Washington, D.C. 20527; 202/336–8563.

OMB Reviewer: Victoria Wassmer, Office of Information and Regulatory Affairs, Office of Management and Budget, New Executive Office Building, Docket Library, Room 10102, 725 17th Street, N.W., Washington, D.C. 20503, 202/395–5871.

SUMMARY OF FORM UNDER REVIEW:

Type of request: Revision.

Title: Request for Registration for Political Risk Investment Insurance.

Form Number: OPIC 50.

Frequency of Use: Once per investor per project.

Type of Respondents: Business or other institutions.

Standard Industrial Classification Codes: All.

Description of Affected Public: U.S. Companies investing overseas.

Reporting Hours: ½ hour per project.

Number of Responses: 850 per year.

Federal Cost: $1060 per year.

Authority for Information Collection: Sections 231 and 234 (a) of the Foreign Assistance Act of 1961, as amended.

Abstract (Needs and Uses): OPIC 50 is submitted by eligible investors to register their intent to make international investments, and ultimately, to seek OPIC insurance. By submitting Form 50 to OPIC prior to making an irrevocable commitment, the incentive effect of OPIC is demonstrated.

Dated: June 24, 1998.

Laura Naide,

Senior Counsel, Department of Legal Affairs.

[FR Doc. 98–17257 Filed 6–26–98; 8:45 am]

BILLING CODE 3210–01–M

DEPARTMENT OF JUSTICE

Notice of Lodging of Consent Decree Pursuant to the Comprehensive Environmental Response, Compensation, and Liability Act

In accordance with Department policy, 28 C.F.R. § 50.7, notice is hereby given that a proposed consent decree in *United States* v. *Keystone Sanitation Company, Inc., et al.,* Civil Action No. 1:CV–93–1482, was lodged on with the United States Court for the Middle District of Pennsylvania on June 23, 1998.

The proposed consent decree pertains to the Keystone Sanitation Superfund Site (''Site''), located near Hanover, Pennsylvania. The United States had sued a number of defendants pursuant to Section 107 of the Comprehensive Environmental Response, Compensation, and Liability Act (''CERCLA''), 42 U.S.C. 9607, to recover past response costs incurred at the Site. In the settlement, eight generator defendants agree to perform on-site and off-site groundwater remediation in exchange for a site-wide covenant not to sue under Section 106 and 107 of CERCLA, 42 U.S.C. 9606 and 9607, and Section 7003 of the Resource Conservation and Recovery Act, 42 U.S.C. 6673. They also agree to pay $125,000 toward natural resource damages in exchange for a covenant not to sue under Section 107 of CERCLA, 42 U.S.C. 9607, for natural resource damages. The settling generator defendants also agree to reimburse $13,000 of the past response costs incurred by the Commonwealth of Pennsylvania in connection with the Site, and to pay $30,000 toward state natural resource damages, and in exchange the Commonwealth provides similar covenants not to sue under CERCLA, RCRA, and the state statutory counterparts. The settling generator defendants receive contribution protection for matters addressed in the settlement, and waive all existing claims against the plaintiffs and all generator or transporter parties, as well as future claims for contribution as to generators and transporters contributing less than 18,000 cubic yards of municipal solid wastes to the Site.

The Department of Justice will receive, for a period of thirty (30) days from the date of this publication, comments relating to the proposed consent decree. Comments should be addressed to the Assistant Attorney General for the Environment and Natural Resources Division, Department of Justice, Washington, D.C. 20530, and should refer to *United States* v. *Keystone Sanitation Company, et al.,* DOJ Ref. # 90–11–2–656A.

The proposed consent decree may be examined at the office of the United States Attorney, Middle District of Pennsylvania, 228 Walnut Street, Harrisburg, PA 17108; the Region III Office of the Environmental Protection Agency, 841 Chestnut Street, Philadelphia, PA 19107; and at the Consent Decree Library, 1120 G Street, NW., 4th Floor, Washington, DC 20005, (202) 624–0892. A copy of the proposed decree may be obtained in person or by mail from the Consent Decree Library, 1120 G Street, NW., 4th Floor, Washington, DC 20005. In requesting a copy please refer to the referenced case and enclose a check in the amount of $125.00 payable to the Consent Decree Library.

Joel Gross,

Chief, Environmental Enforcement Section, Environment and Natural Resources Division.

[FR Doc. 98–17181 Filed 6–26–98; 8:45 am]

BILLING CODE 4410–15–M

DEPARTMENT OF JUSTICE

Federal Bureau of Investigation

DNA Advisory Board Meeting

Pursuant to the provisions of the Federal Advisory Committee Act, notice is hereby given that the DNA Advisory Board (DAB) will meet on July 16, 1998, from 10:00 am until 4:00 pm at The Washington National Airport Hilton Hotel, 2399 Jefferson Davis Highway, Arlington, Virginia 22202. All attendees will be admitted only after displaying personal identification which bears a photograph of the attendee.

The DAB's scope of authority is: To develop, and if appropriate, periodically revise, recommended standards for quality assurance to the Director of the FBI, including standards for testing the proficiency of forensic laboratories, and forensic analysts, in conducting analysis of DNA; To recommend standards to the Director of the FBI which specify criteria for quality assurance and proficiency tests to be applied to the various types of DNA analysis used by forensic laboratories, including statistical and population genetics issues affecting the evaluation of the frequency of occurrence of DNA profiles calculated from pertinent population database(s); To recommend standards for acceptance of DNA profiles in the FBI's Combined DNA Index System (CODIS) which take account of relevant privacy, law enforcement and technical issues; and, To make recommendations

for a system for grading proficiency testing performance to determine whether a laboratory is performing acceptably.

The topics to be discussed at this meeting include: a review of minutes from the February 19, 1998, meeting; introduction of newly appointed Board members, discussion of comments on the DRAFT Quality Assurance Standards for Convicted Offender DNA Databasing Laboratories; discussion of certification; and a discussion of topics for the next DNA Advisory Board meeting.

The meeting is open to the public on a first-come, first seated basis. Anyone wishing to address the DAB must notify the Designated Federal Employee (DFE) in writing at least twenty-four hours before the DAB meets. The notification must include the requestor's name, organizational affiliation, a short statement describing the topic to be addressed, and the amount of time requested. Oral statements to the DAB will be limited to five minutes and limited to subject matter directly related to the DAB's agenda, unless otherwise permitted by the Chairman.

Any member of the public may file a written statement for the record concerning the DAB and its work before or after the meeting. Written statements for the record will be furnished to each DAB member for their consideration and will be included in the official minutes of a DAB meeting. Written statements must be type-written on 8½″ X 11″ xerographic weight paper, one side only, and bound only by a paper clip (not stapled). All pages must be numbered. Statements should include the Name, Organizational Affiliation, Address, and Telephone number of the author(s). Written statements for the record will be included in minutes of the meeting immediately following the receipt of the written statement, unless the statement is received within three weeks of the meeting. Under this circumstance, the written statement will be included with the minutes of the following meeting. Written statements for the record should be submitted to the DFE.

Inquiries may be addressed to the DFE, Dr. Dwight E. Adams, Chief, Scientific Analysis Section, Laboratory Division—Room 3266, Federal Bureau of Investigation, 935 Pennsylvania Avenue, NW, Washington, DC 20535–0001, (202) 324–4416, FAX (202) 324–1462

Dated: June 22, 1998.

Dwight E. Adams,

Chief, Scientific Analysis Section, Federal Bureau of Investigation.

[FR Doc. 98–17136 Filed 6–26–98; 8:45 am]

BILLING CODE 4410–02–P

DEPARTMENT OF LABOR

Pension and Welfare Benefits Administration

[Application No. D–10483, et al.]

Proposed Exemptions; Van Ness Plastic Molding Co., Inc.

AGENCY: Pension and Welfare Benefits Administration, Labor.

ACTION: Notice of proposed exemptions.

SUMMARY: This document contains notices of pendency before the Department of Labor (the Department) of proposed exemptions from certain of the prohibited transaction restrictions of the Employee Retirement Income Security Act of 1974 (the Act) and/or the Internal Revenue Code of 1986 (the Code).

Written Comments and Hearing Requests

All interested persons are invited to submit written comments or request for a hearing on the pending exemptions, unless otherwise stated in the Notice of Proposed Exemption, within 45 days from the date of publication of this **Federal Register** Notice. Comments and requests for a hearing should state: (1) The name, address, and telephone number of the person making the comment or request, and (2) the nature of the person's interest in the exemption and the manner in which the person would be adversely affected by the exemption. A request for a hearing must also state the issues to be addressed and include a general description of the evidence to be presented at the hearing.

ADDRESSES: All written comments and request for a hearing (at least three copies) should be sent to the Pension and Welfare Benefits Administration, Office of Exemption Determinations, Room N–5649, U.S. Department of Labor, 200 Constitution Avenue, NW., Washington, DC 20210. Attention: Application No. _____, stated in each Notice of Proposed Exemption. The applications for exemption and the comments received will be available for public inspection in the Public Documents Room of Pension and Welfare Benefits Administration, U.S. Department of Labor, Room N–5507, 200 Constitution Avenue, NW., Washington, DC 20210.

Notice to Interested Persons

Notice of the proposed exemptions will be provided to all interested persons in the manner agreed upon by the applicant and the Department within 15 days of the date of publication in the **Federal Register**. Such notice shall include a copy of the notice of proposed exemption as published in the **Federal Register** and shall inform interested persons of their right to comment and to request a hearing (where appropriate).

SUPPLEMENTARY INFORMATION: The proposed exemptions were requested in applications filed pursuant to section 408(a) of the Act and/or section 4975(c)(2) of the Code, and in accordance with procedures set forth in 29 CFR part 2570, subpart B (55 FR 32836, 32847, August 10, 1990). Effective December 31, 1978, section 102 of Reorganization Plan No. 4 of 1978 (43 FR 47713, October 17, 1978) transferred the authority of the Secretary of the Treasury to issue exemptions of the type requested to the Secretary of Labor. Therefore, these notices of proposed exemption are issued solely by the Department.

The applications contain representations with regard to the proposed exemptions which are summarized below. Interested persons are referred to the applications on file with the Department for a complete statement of the facts and representations.

Van Ness Plastic Molding Co., Inc. Employees' Money Purchase Pension Plan (the Plan) Located in Belleville, NJ

[Application No. D–10483]

Proposed Exemption

The Department is considering granting an exemption under the authority of section 408(a) of the Act and section 4975(c)(2) the Code and in accordance with the procedures set forth in 29 CFR part 2570, subpart B (55 FR 32836, 32847, August 10, 1990). If the exemption is granted, the restrictions of sections 406(a), 406(b)(1) and (b)(2) of the Act and the sanctions resulting from the application of section 4975 of the Code, by reason of section 4975(c)(1)(A) through (E) of the Code, shall not apply to (1) the making to the Plan of a restoration payment (the Restoration Payment) with respect to certain defaulted third-party notes (Note 1, Note 2 and Note 3; collectively, the Notes) by the Van Ness Plastic Molding Co., Inc. (the Employer), a party in interest with respect to the Plan; and (2) the potential future receipt by the Employer of recapture payments (the

Recapture Payments) made to the Plan pursuant to bankruptcy proceedings involving the issuer/assignor of the Notes.

This proposed exemption is subject to the following conditions:

(a) Mr. William Van Ness, the Plan trustee (the Trustee), agrees to have excluded from his individual account in the Plan (the Account) any benefit attributable to the Restoration Payment, such that the total Restoration Payment is allocated to the Accounts of the other Plan participants and does not include any portion related to the interest of Mr. Van Ness's Account in the Notes.

(b) The Restoration Payment, which is calculated based upon the Account balances in the Plan of participants other than Mr. Van Ness, covers—

(1) The aggregate unrecovered principal of the Notes plus accrued, but unpaid, interest on the Notes as of the dates of default, calculated through December 31, 1997;

(2) An additional amount representing interest on the unrecovered principal of Notes 2 and 3, originally scheduled for maturity in 1999, from January 1998 until the date the Restoration Payment is made; and

(3) Lost opportunity costs associated with Note 1, which was originally scheduled for maturity in 1997, from January 1998 until the date the Restoration Payment is made.

(c) Any Recapture Payments are restricted solely to the amounts, if any, recovered by the Plan with respect to the Notes in litigation or otherwise.

(d) The Restoration Payment is made to resolve potential claims for breach of fiduciary duty relating to the management of the Plan.

(e) The Employer receives a favorable ruling from the Internal Revenue Service (the Service) that the Restoration Payment does not constitute a ''contribution'' or other payment that will disqualify the Plan.

Summary of Facts and Representations

1. The Plan is a nonstandardized prototype money purchase pension plan having 96 participants and total assets of $1,831,873.27 as of December 31, 1997. The Plan is sponsored by the Employer, a New Jersey corporation that is engaged in the manufacture of plastic molding. Mr. William Van Ness, the Trustee, also serves as the sole shareholder and president of the Employer. As Trustee, Mr. Van Ness has full investment discretion and authority with regard to Plan investments except with respect to those that are under the control of an investment manager.

2. Among the assets of the Plan are three notes that were issued or assigned by The Bennett Funding Group, Inc. (Bennett), an unrelated party. The Notes, which were acquired by the Plan between 1993 and 1995 at the direction of Mr. Van Ness, are in the face amounts of $250,000 (Note 1), $17,688.48 (Note 2), and $13,842.22 (Note 3). In order to purchase the Notes, the Plan paid Bennett an aggregate cash purchase price of $281,530.70. Following acquisition, the Plan did not incur any servicing fees or costs in connection with the administration of the Notes.

The Notes are further described as follows:

(a) *Note 1* represented a contractual or an insurable interest in a pooled investment vehicle that was established and sold by Bennett and its subsidiary, Resort Funding, Inc., on a non-recourse basis to accredited investors. The investment pool consisted of consumer sales agreements, leases and rental agreements, installment sales contracts or consumer sales agreements generated by third party business equipment dealers and others. The amount of the issue was $60 million. Each unit or interest had a minimum purchase price of $10,000. The term of each investment contract or ''note'' ranged from 11 months to 60 months and carried interest at the rate of approximately 6 percent to 9 percent per annum.

On March 15, 1993, the Plan acquired Note 1 from Bennett for the cash purchase price of $250,000. Note 1, which carried interest at the rate of 9 percent per annum, was scheduled to mature on December 15, 1997. Interest under Note 1 was payable to the Plan in monthly installments of $1,875, with payments commencing on April 15, 1993.

(b) *Note 2* was acquired by the Plan from Bennett on August 1, 1995 for a total purchase price of $17,688.48. Note 2 had a term commencing on September 30, 1995 and ending on August 30, 1999. It carried interest at the annualized rate of 9.5 percent. Principal and interest were payable to the Plan in monthly installments of $444.39.

(c) *Note 3* was acquired by the Plan from Bennett on November 16, 1995 for a total purchase price of $13,842.22. Note 3 had a term commencing from January 15, 1996 until December 15, 1999. It carried interest at the annualized rate of 9.5 percent. Principal and interest were payable to the Plan in monthly installments of $337.76.

Each Note was secured by (a) equipment owned by Bennett which Bennett was leasing to unrelated parties; and (b) an assignment of the income stream generated by such leases.[1] The Employer and the Trustee believed that the Notes were relatively low-risk and safe investments.

4. On or about March 29, 1996, Bennett filed for Chapter 11 bankruptcy protection in the United States Bankruptcy Court for the Northern District of New York (Case Nos. 96–61376 *et seq.*). Richard C. Breeden, formerly the Chairman of the Securities and Exchange Commission (the SEC), was appointed Bankruptcy Trustee for the Bennett debtors on April 18, 1996. Subsequent to the March 29, 1996 filing, five additional affiliates of Bennett filed for Chapter 11 protection and Mr. Breeden was again appointed as Bankruptcy Trustee for these entities.

5. The Declaration of Bankruptcy by the Bennett debtors stemmed from a lawsuit by the SEC regarding alleged widespread fraudulent practices involving the Bennett debtors. In this regard, (a) over $55 million of fictitious leases were sold to investors and the funds derived from investors were used to service these leases; (b) assignments made of government leases were typically illegal and ineffective; and (c) through certain ''sham'' transactions Bennett appeared to be profitable while it was actually losing money.

6. The Plan filed a Proof of Claim (the Claim) in the amount of $326,355.73 for the ''money loaned and purchase of lease/assignments'' in the Bennett bankruptcy.[2] The Plan's Claim was classified as an unsecured nonpriority claim, since Mr. Breeden noted that there was no collateral or lien on the property of the debtor securing the Claim. The Claim includes both principal and interest payments on the Notes' outstanding balances from the date of the last payment received in 1996 through December 15, 1997. In this regard, the Plan received aggregate payments from Bennett with respect to the Notes of $70,396.67. Such payments can be broken down as follows:

(a) *For Note 1*, the Plan received a final interest payment from Bennett in March 1996 in the amount of $1,875 or total interest payments of $67,500.

(b) *For Note 2*, the Plan received monthly interest payments from Bennett until February 1996 in the amount of $444.39 or a total payment of both principal and interest of $2,221.95.

[1] According to the applicant, the question of whether the Notes were also secured by a master insurance policy issued by Generali Underwriters, Inc., an unrelated party, which guaranteed the income stream from the leases, continues to be the subject of litigation.

[2] The Department expresses no opinion herein on whether the acquisition and holding of the Notes by the Plan violated any of the provisions of Part 4 of Title I of the Act.

(c) *For Note 3,* the Plan received monthly interest payments until February 1996 of $337.36 or a total payment of both principal and interest of $674.72.

At the time of the Bennett bankruptcy proceedings, the amount of unrecovered principal for Notes 1, 2 and 3 were $250,000, $15,825.81 and $13,363.98, respectively.

7. Because of the complexity surrounding the Bennett debtors' bankruptcy, it is unclear whether any recovery of the Notes will occur. Also, due to uncertainty about whether the Notes have actually been insured, the applicant believes it unlikely that any insurance company would pay investors' claims (including individual investors and retirement plans) relating to the individual leases inasmuch as the insured is listed as Bennett. The applicant further represents that whatever amount, if any, that the Plan is able to recover with respect to the Notes through the bankruptcy proceedings, or otherwise, it is likely to suffer significant losses.

8. As stated in Representation 1, as of December 31, 1997, the assets of the Plan totaled $1,831,873.27. This figure reflects the fair market value of the Plan's assets and assumes that the Notes (plus accrued interest) are valued at $0. According to the applicant, the exact fair market value of the Notes is not ascertainable at this time as litigation is ongoing with respect to this matter.

9. At present, the amount of unrecovered principal of the Notes is $279,189.79. In addition, the accrued interest associated with the Notes through the dates of default, calculated through December 31, 1997 is $44,458.89. In order to avoid potential fiduciary claims by Plan participants and others relating to the Plan's investment in the Notes, the Employer proposes to restore the losses to the Plan by making a ''Restoration Payment.'' Therefore, an administrative exemption is requested from the Department.

10. The Restoration Payment will consist, in part, of the aggregate amount of the principal loss on the Notes (i.e., $279,189.79) plus accrued, but unpaid, interest (i.e., $44,458.89), calculated from the time of default through December 31, 1997, and multiplied by 58.38 percent, which percentage reflects the interests in the Plan of participants other than Mr. Van Ness, who has a 41.62 percent interest in the Plan. In other words, 58.38 percent of the unrecovered principal and interest (or $188,946.09) will be paid to the Accounts of the remaining Plan participants. The Restoration Payment will also include an additional amount representing accrued interest on the unpaid principal of Notes 2 and 3, for the period January 1998 until the date the Restoration Payment is made, again attributable to the Accounts of participants in the Plan other than the Account of Mr. Van Ness. Finally, the Restoration Payment will include the lost opportunity costs with respect to the unrecovered principal of Note 1 from the period of its scheduled maturity in December 1997 and ending with the date immediately preceding the date the Restoration Payment is made, again attributable to the Accounts of participants in the Plan other than the Account of Mr. Van Ness. Such opportunity costs will be based on the average rate of return for the Plan, excluding the Notes, for the years 1995 through 1997.[3]

Assuming the Restoration Payment is made to the Plan on June 30, 1998, the applicant represents that the opportunity costs associated with Note 1 is $18,302.13 and would be calculated as follows:

$250,000 (Unrecovered Principal of Note 1) × 58.38% (Plan's Interest in Note 1) × 12.54% (Plan's Average Rate of Return for 1995–1997) = $18,302.13.

Again assuming the Restoration Payment is made to the Plan on June 30, 1998, the applicant represents that the total payment would be approximately $208,321.87. Of this amount,

(a) *$188,946.09* would denote the Restoration Payment as of December 31, 1997, which would be calculated as follows:

$250,000.00	Note 1 Unrecovered Principal
15,825.81	Note 2 Unrecovered Principal
13,363.98	Note 3 Unrecovered Principal
$279,189.79	Total Unrecovered Principal
$44,458.89	Accrued interest on Notes from Default through 12/31/97
$323,648.68	Total Unrecovered Principal and Accrued Interest through 12/31/97

$323,648.68 × 58.38% (Plan's Interest in Notes 1, 2 and 3 plus Accrued Interest) = $188,946.09;

(b) *$18,302.13* would be attributed to the opportunity costs associated with Note 1 from January 1998 through June 30, 1998, as already calculated above;

(c) *$438.86* would be attributed to actual interest accruing on Note 2 from January 1998 through June 30, 1998, calculated as follows: $15,825.81 (Note 2 Unrecovered Principal) × 58.38% (Plan's Interest in Note 2) × 4.75% (½ year interest) = $438.86; and

(d) *$634.79* would represent the additional interest accruing on Note 3 from January 1998 until June 30, 1998, calculated as follows: $13,363.98 (Note 3 Unrecovered Principal) × 58.38% (Plan's Interest in Note 3) × 4.75% (½ year interest) = $634.79.

11. Because Mr. Van Ness has agreed to have excluded from his Account any benefit which may be attributable to the Restoration Payment, each affected Plan participant will have allocated to his or her Account in the Plan the applicable portion of the Restoration Payment as determined by the third-party Plan administrator. However, in no event will a restored Account have assets exceeding the amount that would have been in the Account of the affected Plan participant but for the loss due to the Bennett bankruptcy.

The Plan will be required to refund the Restoration Payment to the Employer only to the extent of any amount or amounts that the Plan is able to recover from Bennett (the Recapture Payment). The Employer will bear all expenses of prosecuting the Plan's claims with respect to the Notes, including those relating to the Bennett bankruptcy proceedings, as well as the costs of the exemption application.

12. Coincident with its filing of the exemption application, the Employer requested a Private Letter Ruling from the Service on the issues of whether the Restoration Payment (a) would constitute a ''contribution'' or other payment to the Plan subject to the provisions of either sections 404 or 4972 of the Code; (b) would adversely affect the qualified status of the Plan pursuant to either Code sections 401(a)(4) or 415; (c) would result in taxable income to affected Plan participants and beneficiaries; and (d) would be deductible in full by the Employer pursuant to section 162 of the Code.[4] In

[3] The average rate of return earned by the Plan for 1995 through 1997 is 12.54 percent. This figure does not include the Plan's investment in the Notes. In a letter dated September 11, 1997, Mark Shemtob, A.S.A of Abar Pension Services, Inc., an independent actuarial and pension consulting firm, located in Livingston, New Jersey, represented that the Plan had net investment earnings of $198,126 in 1995 and an average account balance of $1,198,876, which would result in a 16.53 percent rate of return for 1995. In 1996, Mr. Shemtob noted that the Plan had net investment earnings of $131,397 and an average account balance of $1,032,459, which would result in a 12.73 percent rate of return for that year.

By letter dated April 29, 1998, the applicant noted that the Plan's rate of return for the year 1997 was 8.41 percent based upon a telephone communication with Mr. Shemtob. Accordingly, the average rate of return for the Plan for the period 1995 through 1997 is 12.54 percent.

[4] Section 401(a)(4) of the Code provides that contributions made by an employer to or under a

Continued

its ruling letter of March 2, 1998, the Service stated that neither the Code nor the Income Tax Regulations provide guidance on whether the Employer's proposed Restoration Payment would constitute a contribution under the Code. However, in the instant case, the Service noted that the Restoration Payment would ensure that the affected participants would recover their Account balances and place such participants in the position in which they would have been in the absence of the Trustee's decision to invest a portion of the Plan's assets in the Notes.

The Service explained that it was reasonable to characterize the Restoration Payment as a ''replacement payment.'' In this regard, the replacement payment would be made by the Employer in response to potential claims against the Employer and those individuals who were responsible for investing the Plan's assets in the Notes. In addition, the replacement payment would be allocated to the Accounts of participants in the Plan who had incurred a principal loss as a result of the Note investment. Thus, the Service concluded that the proposed Restoration Payment (a) would not constitute a contribution or other payment subject to the provisions of Code sections 404 or 4972; (b) would not adversely affect the qualified status of the Plan pursuant to either Code section 401(a)(4) or Code section 415; and (c) would not, when made, result in taxable income to affected Plan participants and beneficiaries.

Finally, the ruling letter is conditioned on two requirements. Firstly, the Restoration Payment must be made to resolve potential claims for breach of fiduciary duty relating to the management of the Plan. Secondly, the ruling letter is based on the representation that no part of the Restoration Payment will be added to the Account of the Trustee.

13. In summary, it is represented that the proposed transactions will satisfy the statutory criteria for an exemption under section 408(a) of the Act because: (a) The Restoration Payment will enable the Plan to recover immediately the unpaid principal of the Notes, accrued interest and lost opportunity costs; (b) any Recapture Payments will be restricted solely to the amounts, if any, recovered by the Plan with respect to the Notes in litigation or otherwise; (c) the Employer has received a favorable ruling from the Service that the Restoration Payment does not constitute a ''contribution'' or other payment that will disqualify the Plan; (d) Mr. Van Ness's Account will not share in the Restoration Payment such that the total Restoration Payment will be made to the Accounts of Plan participants other than Mr. Van Ness; and (e) the Restoration Payment will be made to resolve potential claims for breach of fiduciary duty relating to the management of the Plan.

For Further Information Contact: Ms. Jan D. Broady of the Department, telephone (202) 219–8881. (This is not a toll-free number.)

John Hancock Mutual Life Insurance Company (JHMLIC) Located in Boston, Massachusetts

[Application No. D–10484]

Proposed Exemption

The Department is considering granting an exemption under the authority of section 408(a) of the Act and section 4975(c)(2) of the Code and in accordance with the procedures set forth in 29 CFR part 2570 subpart B (55 FR 32836, 32847, August 10, 1990). If the exemption is granted, the restrictions of section 406(b)(2) of the Act shall not apply to:

(1) The proposed purchases and sales of timber properties between various separate accounts (the Accounts), such as the ForesTree Separate Account, that are maintained by JHMLIC and managed by Hancock Natural Resource Group, Inc. (HNRG), John Hancock Timber Resource Corporation (JHTRC), or another Affiliate of JHMLIC; and

(2) The proposed purchases and sales of timber properties between the Accounts where HNRG or another Affiliate of JHMLIC serves as the investment manager and various partnerships (the Partnerships) in which JHTRC or another Affiliate of JHMLIC is the general partner.

Conditions and Definitions

This proposed exemption is subject to the following conditions:

1. ERISA-Covered Plans may participate in the proposed transactions only if they have total assets in excess of $100 million.

2. At least 30 days prior to the proposed transaction, each affected Customer invested in the Accounts or Partnerships participating in the transaction will be provided with information regarding the timber properties involved and the terms of the transaction, including the purchase price and how the transaction would meet the goals and investment policies of the Customer. Notice of any change in the purchase price will be provided to the Customer at least 30 days prior to the consummation of the transaction.

3. An Independent Fiduciary will be appointed by JHMLIC or an Affiliate to represent the interests of the ERISA-Covered Plans as follows:

(a) Where the proposed transaction involves an ERISA-Covered Plan (including a Pooled Separate Account or Partnership holding ''plan assets'' subject to the Act)[5] and a Non-ERISA Plan or other Non-ERISA Customer, an Independent Fiduciary will be appointed to represent the ERISA-Covered Plan (or Pooled Separate Account or Partnership), whether that Account or Partnership is the buyer or the seller of a timber property in the proposed transaction;

(b) Where the proposed transaction involves two ERISA-Covered Plans (or Pooled Separate Accounts or Partnerships holding ''plan assets'' subject to the Act) and the decision to liquidate the timber property is the result of one or more ''triggering events'' described below, an Independent Fiduciary will be appointed by JHMLIC or an Affiliate to represent the purchasing plan (or Pooled Separate Account or Partnership)—i.e. the Buying Account or Buying Partnership. A ''triggering event'' will exist whenever:

(i) JHMLIC or an Affiliate receives a direction from the Customer to liquidate

stock bonus, pension, profit sharing or annuity plan shall be deductible under section 404 subject to certain limitations contained therein.

Section 415 of the Code provides, in relevant part, that a trust which is part of a pension, profit sharing or stock bonus plan shall not constitute a qualified trust under section 401(a)—

(A) in the case of a defined benefit plan, the plan provides for the payment of benefits with respect to a participant which exceeds the limitations of subsection (b), or

(B) in the case of a defined contribution plan, contributions and other additions under the plan with respect to any participant for any taxable year exceed the limitations of subsection (c).

Section 415(e) of the Code provides limitations on employer contributions and benefits where an individual is a participant in both a defined benefit and a defined contribution plan maintained by the same employer.

Section 1.415–6(b)(2) of the Income Tax Regulations provides that the term ''annual additions'' includes employer contributions which are made under the plan. Section 1.415–6(b)(2) further provides that the Commissioner of the Service may treat transactions between the plan and the employer or certain allocations to participants' accounts as giving rise to annual additions.

Section 4972 of the Code imposes on an employer an excise tax on nondeductible contributions to a qualified plan.

Finally, section 402(a) of the Code generally provides that amounts held in a trust that is exempt from tax under Code section 501(a) and that is part of a plan that meets the qualification requirements of Code section 401(a) will not be taxable to participants until such time as such amounts are actually distributed to distributees under the plan.

[5] See 29 CFR 2510.3–101 for the Department's definition of ''plan assets'' relating to plan investments.

all of the Customer's Account or interest in a Partnership;

(ii) JHMLIC or an Affiliate receives a request by the Customer to liquidate a specified timber property; or

(iii) A liquidation of all of the assets held in the Selling Account or Selling Partnership, or a particular property held by such Account or Partnership, is required under the terms of the investment contract, insurance contract or investment guidelines governing the Account or Partnership, and the decision to select any particular timber property to be sold is outside of the control of JHMLIC and its Affiliates; and

(c) Where the proposed transaction involves two ERISA-Covered Plans (or Pooled Separate Accounts or Partnerships holding ''plan assets'' subject to the Act) and there is no ''triggering event'' as described above in Condition 3(b), an Independent Fiduciary will be appointed by JHMLIC or an Affiliate for each Account or Partnership involved in the transaction.

4. With respect to each transaction requiring the participation of an Independent Fiduciary (as described in Condition 3 above), the purchase and sale of a timber property shall not be consummated unless the Independent Fiduciary determines that the transaction, including the price to be paid or received for the property, would be in the best interest of the particular Account or Partnership involved based on the investment policies and objectives of such Account or Partnership.

5. Each Account or Partnership which buys or sells a particular timber property pays no more than or receives no less than the fair market value of the timber property at the time of the transaction, as determined by a qualified independent real estate appraiser experienced with the valuation of timber properties similar to the type involved in the transaction.

6. Each purchase or sale of a timber property between the Accounts or Partnerships is a one-time transaction for cash.

7. Each Account or Partnership involved in the purchase or sale of a timber property pays no real estate commissions or brokerage fees relating to the transaction.

8. JHMLIC or an Affiliate acts as a discretionary investment manager for the assets of the Accounts or Partnerships involved in each transaction.

9. No purchase or sale transaction is designed to benefit the interests of one particular Account or Partnership over another.

10. For purposes of this proposed exemption:

(a) ''Account'' means a Separate Account as defined below, including a ''Non-Pooled Separate Account'' or a ''Pooled Separate Account'';

(b) ''Partnership'' means a limited partnership with assets, that may or may not be considered ''plan assets'' subject to the Act, for which JHTRC or another Affiliate of JHMLIC is the general partner and HNRG or another Affiliate of JHMLIC serves as investment manager;

(c) ''ERISA-Covered Plan'' is an employee benefit plan as defined under section 3(3) of the Act;

(d) ''Non-ERISA Plan'' or ''Non-ERISA Customer'' means an entity or investor not covered by the provisions of Title I of the Act, such as a governmental plan, a university endowment fund, a charitable foundation fund or other institutional investor, whose assets are managed in an Account or Partnership for which JHMLIC or an Affiliate acts as investment manager;

(e) ''Affiliate'' means any person directly or indirectly through one or more intermediaries, controlling, controlled by, or under common control with JHMLIC;

(f) ''Buying Account'' or ''Buying Partnership'' means the Account or Partnership which seeks to purchase timber properties from another Account or Partnership;

(g) ''Selling Account'' or ''Selling Partnership'' means the Account or Partnership which seeks to sell timber properties to another Account or Partnership;

(h) ''Independent Fiduciary'' means a person or entity with authority to both review the appropriateness of the proposed transaction for an Account or Partnership, that is considered to hold ''plan assets'' subject to the fiduciary responsibility provisions of the Act, based on the investment policy established for that Account or Partnership, and to negotiate the terms of the transaction, including the price to be paid for the timber property. An individual or firm selected to serve as an Independent Fiduciary shall meet the following criteria:

(1) The individual or firm may have no current employment relationship with John Hancock or an Affiliate, although a prior employment relationship would not disqualify the individual or firm;

(2) The individual or firm must not have received more than five (5) percent of its annual gross receipts during the preceding calendar year from business with John Hancock and its Affiliates;

(3) The individual or individuals in the firm must have an undergraduate or graduate academic degree in forestry;

(4) The individual or individuals in the firm must have a minimum of five (5) years experience and a demonstrated proficiency in timberland appraisal work;

(5) The individual or individuals in the firm must have a current certification as a Member of the Appraisal Institute, a Senior Real Estate Analyst under the Society of Real Estate Appraisers, or a similar nationally recognized certification;

(6) The individual or firm must have the ability to access appropriate timberland sales comparison data and make appropriate adjustments to the subject property; and

(7) The individual or firm must not have a criminal record involving fraud, fiduciary standards, or securities laws violations;

(i) ''Separate Account'' means a segregated asset Account which receives premiums or contributions from customers, including employee benefit plans subject to the Act, in connection with group annuity contracts and funding agreements, with investments held in the name of JHMLIC, but where the value of the contract or agreement to the Customer (contractholder) fluctuates with the value of the investment associated with such Account;

(j) ''Non-Pooled Separate Account'' or ''Non-Pooled Account'' means a Separate Account established to back a single contract issued to one Customer, which may be an employee benefit plan subject to the Act;

(k) ''Pooled Separate Account'' or ''Pooled Account'' means a Separate Account established to back a group of substantially identical contracts issued to a number of unrelated Customers, including employee benefits plans subject to the Act; and

(l) ''Customer'' means a person or entity that acts as the authorized representative for an Account or Partnership involved in a proposed purchase or sale of timber properties, that is independent of JHMLIC and its Affiliates.

Summary of Facts and Representations

1. *The Applicants.* The applicant for the exemption is John Hancock Mutual Life Insurance Company of Massachusetts (JHMLIC or ''John Hancock'') on behalf of itself and on behalf of its indirect wholly-owned subsidiaries, Hancock Natural Resource Group, Inc. (HNRG) and John Hancock Timber Resource Corporation (JHTRC), both Delaware corporations.

John Hancock ranks as one of the largest insurance companies in the United States and is a registered investment advisor. John Hancock and its subsidiaries had total assets of approximately $58.6 billion as of December 31, 1996, and assets under management of approximately $107 billion as of that date.

John Hancock offers group annuity contracts and funding agreements to Customers, including employee benefit plans subject to the Act. Certain of these contracts and agreements provide that, in accordance with contractholder direction, the premiums or contributions received from the contractholder will be allocated internally on the books of John Hancock to segregated asset accounts or ''Separate Accounts.'' The Separate Account investments are held in John Hancock's name, but the value of the contract or agreement to the contractholder fluctuates with the value of the investments associated with the Separate Account. The direct expenses of managing the investments and John Hancock's fees are charged against the value of the Separate Account.

Separate Accounts may be established to back a single contract issued to one customer (a ''Non-Pooled Separate Account''). In addition, a Separate Account may be established to back a group of substantially identical contracts issued to a number of unrelated customers (a ''Pooled Separate Account'').

2. John Hancock currently maintains a number of Separate Accounts that invest almost exclusively in timberland. These Pooled and Non-Pooled Separate Accounts are known as the ForesTree Separate Accounts. The contractholders of both the pooled and non-pooled ForesTree Separate Accounts include both ERISA-covered plans and non-ERISA governmental plans. As of July 1997, John Hancock had established a total of 14 such pooled and non-pooled ForesTree Separate Accounts in which 32 contractholders participate. Currently, over two million acres of timberland are allocated to the ForesTree Separate Accounts, and these properties have a fair market value in excess of $2.3 billion.

Under the applicable contract or agreement, John Hancock has the right to control, manage and administer each Separate Account, including the sole discretion to select and dispose of investments in accordance with the investment policy established for the Account.

3. John Hancock's management responsibilities under the ForesTree Separate Accounts are performed mostly by its wholly-owned subsidiary, HNRG, which was established in 1995. Prior to its incorporation in 1995, HNRG functioned as a division within John Hancock. HNRG currently manages 2.5 million acres of timberland valued at approximately $2.87 billion. HNRG's managed assets include assets held in the ForesTree Separate Accounts as well as assets managed through other arrangements. HNRG is responsible for all decisions regarding the acquisition and disposition of timberland properties held in the ForesTree Separate Accounts, although such decisions must be reviewed and approved by John Hancock's internal investment committees. HNRG also has sole responsibility for the management of John Hancock's timberland properties, including site preparation and reforestation, road building and construction, maintenance, acquisition of insurance and payment of taxes. On-site work is performed by independent forest managers under contract to HNRG.

4. Assets invested in the ForesTree Separate Accounts are managed by John Hancock and HNRG in accordance with the investment policies established for the Accounts. The investment policy for each Non-Pooled Account is established jointly by John Hancock and the contractholder. For each of the Pooled Accounts, the investment policy is established by John Hancock and adopted by each contractholder when it chooses to participate in a Pooled Account. Under the investment policy of most of the ForesTree Separate Accounts, timberland properties are purchased or sold opportunistically to favor the return of the particular portfolio. However, John Hancock states that as a practical matter the properties allocated to the ForesTree Separate Accounts are fairly illiquid investments, and are considered by its customers to be long-term investments.

HNRG has established certain guidelines that are followed as investments are acquired and allocated to timberland portfolios it manages, including those portfolios for Accounts holding ''plan assets'' subject to the Act such as the ForesTree Separate Accounts. The goal of these guidelines is to enable HNRG to provide its clients with access to a variety of timberland acquisitions through a fair, consistent and unbiased process. The central element of the procedure is a determination of the suitability of an investment for a portfolio. In the event that an investment is suitable for more than one portfolio, priorities are set in accordance with an investment queue procedure.

HNRG states that the first step in determining portfolio suitability is to identify all potential funding sources for a pending acquisition among its existing clients. Each prospective participating Account is evaluated independently. The client's investment policy, setting forth specific objectives and constraints, is the primary determinant of whether or not a particular acquisition is suitable for allocation to the Account. The portfolio ''fit'' is based on financial analysis that projects and measures future portfolio performance, including and excluding the pending acquisition, against established performance targets. Performance targets may include total return, appreciation and income. Different levels of investment in the pending acquisition are reviewed. Consideration is given to diversification by geographic region, timber markets and timber species. The proposed investment is analyzed to determine if it can be broken into appropriate parcels to fit the client portfolio's needs. Portfolio investment recommendations are intended to be consistent with the standards defined by the Association for Investment Management and Research (AIMR), a professional association which has adopted certain standards for best practices by investment managers.

The amount of funding available for any potential acquisition is determined after the portfolio suitability analysis has been completed. As a result, HNRG states that when it comes to funding an acquisition, one of the following three situations will exist: (i) The acquisition will be undersubscribed (i.e. there are not enough funds available to acquire the investment); (ii) the acquisition is fully subscribed (i.e. there are ample funds available to acquire the investment), or (iii) the acquisition is oversubscribed (i.e. client portfolio funding availability exceeds the amount needed to fund the acquisition).

The ''investment queue'' sets the priorities for utilizing funds from existing client Accounts in the event an investment is suitable for more than one client's portfolio. The ''investment queue'' is based on the source of available client funds with the following order of priority:

(a) Client funds committed to timber property acquisitions, but unallocated;
(b) Timberland disposition proceeds designated for reinvestment;
(c) Cash flow from operations; and
(d) Contingent funds.

Within each of the four categories of available funds, the length of time that the funds have been available for investment will determine the level of priority. For example, funds that have

been committed to an HNRG timberland investment program, but are unallocated, will receive priority between clients in the chronological order of when each commitment was established.

5. Customers that want to use John Hancock's timber management expertise typically invest in the ForesTree Separate Accounts. These customers include both ERISA-covered plans and non-ERISA plans. Customers may also invest directly in Partnerships that own timber properties. In these cases, JHTRC is usually appointed the general partner of the Partnership holding the property and HNRG serves as investment manager of the Partnership. These management responsibilities are exercised in accordance with the investment guidelines contained in the partnership agreements, which contain HNRG's investment selection and allocation policy procedures (as described in Paragraph 4 above).

For purposes of this proposed exemption, both ForesTree Separate Account contractholders and John Hancock's investment management clients who directly invest in Partnerships holding timber properties, including ERISA-Covered Plans, are referred to as ''Customers'.

The Transactions

6. The Applicants state that occasions may arise when it is appropriate to liquidate timber property held in an Account or Partnership, even though the property remains an attractive investment. For example, a Customer's timber investments may have so increased in value from its initial investment that the timber-related portion of the Customer's aggregate portfolio exceeds the Customer's current asset allocation guidelines for that investment class. In addition, a Customer may request that John Hancock liquidate a portion of its timber portfolio in order to recognize some of the portfolio's gains, even though the particular timber parcel remains an attractive investment. John Hancock may also conclude that a particular timber parcel, through individually an attractive investment, is no longer appropriate for the Customer's Account, in light of the composition of the Account, its liquidity needs and other available investment opportunities.

The Applicants state that in these and other situations in which timber parcels might be sold, the parcels chosen for liquidation could be appropriate investments for other Customers. Under the proposed exemption, John Hancock could satisfy the objectives of a Selling Account or Selling Partnership and a Buying Account or Buying Partnership in a manner that provides advantages to both sides of the transaction. Therefore, John Hancock requests an exemption that would permit it (and its Affiliates) to transfer timber parcels between its Customer Accounts and Partnerships under certain conditions and procedures described herein.

7. If John Hancock determines that it should liquidate any timberland assets held in a Customer's Account or Partnership, or if as the result of certain ''triggering events'' described below such a liquidation must occur, and John Hancock concludes that a particular parcel of timberland to be sold is an appropriate investment for the portfolio of another Account or Partnership, John Hancock will engage independent fiduciaries (the I/Fs) to represent the interests of any ERISA-Covered Plans involved.

Under the procedures described by the Applicants, an I/F will be appointed by JHMLIC or an Affiliate to represent the interests of the ERISA-Covered Plans as follows:

(a) Where the proposed transaction involves an ERISA-Covered Plan (including a Pooled Separate Account or Partnership holding ''plan assets'' subject to the Act) and a Non-ERISA Plan or other Non-ERISA Customer, an I/F will be appointed to represent the ERISA-Covered Plan (or Pooled Separate Account or Partnership), whether that Account or Partnership is the buyer or the seller of a timber property in the proposed transaction.

(b) Where the proposed transaction involves two ERISA-Covered Plans (or Pooled Separate Accounts or Partnerships holding ''plan assets'' subject to the Act) and the decision to liquidate the timber property is the result of one or more ''triggering events'' described below, an I/F will be appointed by JHMLIC or an Affiliate to represent the purchasing plan (or Pooled Separate Account or Partnership)—i.e. the Buying Account or Buying Partnership. A ''triggering event'' will exist whenever:

(i) JHMLIC or an Affiliate receives a direction from the Customer to liquidate all of the Customer's Account or interest in a Partnership;

(ii) JHMLIC or an Affiliate receives a request by the Customer to liquidate a specified timber property; or

(iii) A liquidation of all of the assets held in the Selling Account or Selling Partnership, or a particular timber property held by such Account or Partnership, is required under the terms of the investment contract, insurance contract or investment guidelines governing the Account or Partnership, and the decision to select any particular property to be sold is outside the control of JHMLIC and its Affiliates.

(c) Where the proposed transaction involves two ERISA-Covered Plans (or Pooled Separate Accounts or Partnerships holding ''plan assets'' subject to the Act) and there is no ''triggering event'', an I/F will be appointed by JHMLIC or an Affiliate for each Account or Partnership involved in the transaction.

With respect to each transaction requiring the participation of an I/F, the purchase and sale of a timber property shall not be consummated unless the I/F determines that the transaction, including the price to be paid or received for the property, would be in the best interest of the particular Account or Partnership involved based on the investment policies and objectives of such Account or Partnership. The I/F will have the authority both to review the appropriateness of the proposed purchase or sale in light of the Customer's investment policy and to negotiate the terms of the transaction, including the price to be paid for the property and the allocation of the transaction cost savings to the buyer and seller.[6] The I/F will always be provided with a recent appraisal of the timber property obtained by HNRG from a qualified independent real estate appraiser experienced with the valuation of timber properties similar to the type involved in the transaction. Under the conditions of this proposed exemption, each Account or Partnership which buys or sells a particular timber property must pay no more than or receive no less than the fair market value of the timber property at the time of the transaction, as determined by an independent qualified real estate appraiser.

8. An individual or firm selected to serve as an I/F would be required to meet the following criteria:

(a) The individual or firm may have no current employment relationship with John Hancock or an Affiliate, although a prior employment relationship would not disqualify the individual or firm;

(b) The individual or firm must not have received more than five (5) percent of its annual gross receipts during the preceding calendar year from business with John Hancock and its Affiliates;

[6] The Applicants state that generally all of the transaction expenses for the buyer and the seller would be saved. However, to the extent that there are any expenses that cannot be avoided, such expenses would be negotiated between the independent fiduciary and John Hancock, or a second independent fiduciary, as the case may be.

(c) The individual or individuals in the firm must have an undergraduate or graduate academic degree in forestry;

(d) The individual or individuals in the firm must have a minimum of five (5) years experience and a demonstrated proficiency in timberland appraisal work;

(e) The individual or individuals in the firm must have a current certification as a Member of the Appraisal Institute, a Senior Real Estate Analyst under the Society of Real Estate Appraisers, or a similar nationally recognized certification;

(f) The individual or firm must have the ability to access appropriate timberland sales comparison data and make appropriate adjustments to the subject property; and

(g) The individual or firm must not have a criminal record involving fraud, fiduciary standards, or securities laws violations.

In addition to the appointment of an I/F, the Applicants state that at least 30 days prior to any transaction, each affected Customer involved with the Accounts or Partnerships participating in the transaction will be provided with information regarding the timber properties involved and the terms of the transaction, including the purchase price and how the transaction would meet the goals and investment policies of the Customer. John Hancock will provide an additional notice to Customers should the price of a timber property change following the initial notice. The transaction will not be consummated until 30 days after the second notice has been provided.

Any Customer that is an ERISA-Covered Plan will be responsible for monitoring the performance of John Hancock and its Affiliates as well as the I/F, when an I/F is required, to ensure that the conditions of this proposed exemption are met. The Applicants state that all ERISA-Covered Plans will be large plans with sophisticated fiduciaries capable of monitoring the performance of the parties in the proposed transaction. Under the conditions of this proposed exemption, ERISA-Covered Plans may participate in the proposed transactions only if they have total assets in excess of $100 million.

Justification for Transactions

9. The Applicants represent that the transfer of timber properties from one Account or Partnership to another will have a number of advantages to both the Buying Account or Partnership and the Selling Account or Partnership.

First, when the transfer is between two of John Hancock's ForesTree Separate Accounts, it will not require the transfer of legal ownership of the property. John Hancock has legal title to all assets allocated to its Separate Accounts and may reallocate these assets among Separate Accounts without a change in legal title. This means that significant transaction costs can be avoided, including real property transfer taxes, title insurance policy costs, closing and recording costs and, where required, phase one environmental audits.[7] In addition, each Account or Partnership involved in the purchase or sale of a timber property would not pay any real estate commissions or brokerage fees for the transaction. The allocation of any remaining transaction costs would be negotiated between the buyer and the seller for each transaction. Under the transactions that would be covered by this proposed exemption, the I/Fs would be responsible for negotiating the allocation of any remaining transaction costs for the Accounts or Partnerships for which they are acting.

Second, a transfer of timber properties between the Accounts or Partnerships will often allow a Buying Account or Partnership to invest its assets more quickly and in properties that might not otherwise be available to them. John Hancock believes that investors commit to establishing a timberland investment portfolio because they have identified a current need for such an asset category. Therefore, John Hancock states that once a Customer has committed to a ForesTree Separate Account or to a Partnership, it is important to the Customer to invest its funds as rapidly as is prudent. However, attractive timber properties are relatively scarce, and allowing a transfer of timber parcels in accordance with this proposed exemption would provide an opportunity for the purchasing Customers to invest funds more rapidly than would be possible if the purchase involved a seller having no relationship to John Hancock.

Third, the Applicants represent that because HNRG is the manager of the Selling Account's or Partnership's timber property, much more information about the property would be available to a Buying Account or Partnership than would be if the property were not managed by HNRG. John Hancock states that this situation reduces the risk to its purchasing Customers. In addition, because HNRG is already familiar with the timber property, the Buying Account or Partnership would avoid certain expenses normally associated with the purchase of a new property. These ''start-up'' expenses include the costs of lot management plan development, aerial photographs and geographical information systems (GIS) mapping.

Finally, each purchase and sale of a timber property between the Accounts and/or Partnerships will be a one-time transaction for cash. No purchase or sale transaction will be designed to benefit the interests one particular Account or Partnership over another.

10. In summary, John Hancock represents that the proposed transactions will meet the statutory criteria of section 408(a) of the Act because: (a) Each purchase or sale of a timber property between the Accounts or Partnerships will be a one-time transaction for cash; (b) each affected Customer involved with the Accounts or Partnerships participating in the transaction will be provided with information, at least 30 days prior to the proposed transaction, regarding the timber properties involved and the terms of the transaction, including the purchase price and how the transaction would meet the goals and investment policies of the Customer; (c) an I/F will be appointed by JHMLIC or an Affiliate to represent the interests of the ERISA-Covered Plans in the proposed transaction, unless the decision to liquidate a timber property from a Selling Account or Selling Partnership is the result of one or more ''triggering events'; (d) in a transaction where an I/F is involved, the purchase or sale of the timber property shall not be consummated unless the I/F determines that the transaction, including the price to be paid or received for the property, would be in the best interest of the particular Account or Partnership involved based on the investment policies and objectives of such Account or Partnership; (e) each Account or Partnership which buys or sells a particular timber property will pay no more than or will receive no less than the fair market value of the timber property at the time of the transaction, as determined by an independent qualified real estate appraiser; (f) each Account or Partnership involved in the purchase or sale of a timber property will pay no real estate commissions or brokerage fees relating to the transaction; (g) no purchase or sale transaction will be designed to benefit the interests one particular Account or

[7] For example, in a transaction between Lyons Falls Pulp & Paper, Inc., as seller, and a JHMLIC Non-Pooled Separate Account, as buyer, which involved 67,430 acres of timberland that was sold to the Account for approximately $12.1 million on February 14, 1996, the total transaction costs involved more than 7.15 percent of the acquisition price or over $865,150 ($12,100,000 × .0715). This figure excludes the New York State Gains Tax of over $1,000,000 that was incurred by the seller.

Partnership over another; and (h) ERISA-Covered Plans will be able to participate in the proposed transactions only if they have total assets in excess of $100 million.

FOR FURTHER INFORMATION CONTACT: Mr. E.F. Williams of the Department, telephone (202) 219–8194. (This is not a toll-free number.)

ACRA Local 725 Health & Welfare Fund (the Welfare Plan) and ACRA Local 725 Pension Fund (the Pension Plan; together, the Plans) Located in Macon, Georgia

[Application Nos. L–10536 and D–10537]

Proposed Exemption

The Department is considering granting an exemption under the authority of section 408(a) of the Act and in accordance with the procedures set forth in 29 CFR part 2570, subpart B (55 FR 32836, 32847, August 10, 1990). If the exemption is granted, the restrictions of section 406(b)(2) of the Act shall not apply to the proposed payment of interest by the Pension Plan to the Welfare Plan on past mistaken contributions (the Mistaken Contributions) pursuant to an indemnification agreement by the Board of Trustees of the Pension Plan with respect to the Mistaken Contributions, provided the following conditions are satisfied: (a) The Mistaken Contributions occurred as a result of an inadvertent clerical error committed by the Plans' independent third party administrator; (b) the principal amount of the Mistaken Contributions was repaid as soon as the error was discovered; and (c) the amount of interest to be paid to the Welfare Plan by the Pension Plan has been determined by a third party bank to be the fair market rate of interest.

Summary of Facts and Representations

1. The Welfare Plan is the ACRA Local 725 Health & Welfare Fund of Dade, Broward and Monroe Counties, Florida, and the Pension Plan is the ACRA Local 725 Pension Fund of Dade, Broward and Monroe Counties, Florida. Each Plan is maintained pursuant to Collective Bargaining Agreements between Air Conditioning Refrigeration Associates, an employer association representing various employers (the Employers), and United Association Local Union Number 725 (the Union), an employee organization whose members are covered by the Plan. The Union represents individuals who perform, as employees of the Employers, construction and service work in the air conditioning and pipe trades.

The Welfare Plan provides health and welfare benefits to participant employees and their families. It is funded solely by Employer contributions and earnings thereon. The Welfare Plan has been in existence since 1961. As of April 30, 1997, the Welfare Plan had 674 participants, and approximately $4,275,000 in assets.

The Pension Plan provides retirement and certain disability benefits to Plan participants and survivor benefits to spouses and/or other beneficiaries that may be designated by the participant in accordance with the Plan's procedures. The Pension Plan has been in existence since 1962. As of April 30, 1997 the Pension Plan had 1,633 participants and assets of approximately $56,100,000.

2. The Board of Trustees of each Plan, all of whom are individuals who serve in that capacity for both Plans, had for a period of several years retained the services of Consolidated Benefit Services, Inc. of Atlanta, Georgia (Consolidated) to serve as administrative manager (the Administrator) for the Plans. Employer contributions are made to the Pension Plan and the Welfare Plan as well as other trust funds and entities to which contributions are required to be paid pursuant to the Collective Bargaining Agreement between the Employers and the Union. These contributions are collected and deposited in an escrow account (the Escrow) under the supervision of the Administrator. The purpose of the Escrow is to receive and deposit Employer contributions, allow for clearance of checks and record each Employer contribution to the Plans in a timely fashion. Sums received by the Escrow are then allocated to the appropriate accounts. Thus, the appropriate amount of contributions due to the Welfare Plan are normally allocated and paid to the Welfare Plan accounts, and the appropriate amount of contributions due to the Pension Plan are normally allocated and paid to the Pension Plan accounts.

3. In approximately September, 1996, the Board of Trustees of each Plan was advised that the parent corporation of Consolidated, Harrington Benefit Corporation (Harrington), which was also the parent corporation of American Benefit Plan Administrators, Inc. (ABPA), had been acquired by Health Services, Inc. (Health Services), a public company. After the acquisition of Harrington by Health Services, all administrative record-keeping for the Plans was transferred from the Atlanta office of Consolidated to the Dallas office of ABPA.

4. In August 1997, the independent accountant for the Plans (the Auditor), in the course of conducting a routine annual audit, discovered that in November 1996, ABPA, as the Administrator for the Plans, withdrew from the Escrow and transferred to the accounts of the Pension Plan, sums which were in excess of the proper contributions allocated to the Pension Plan by the Employers. This excess payment created a shortfall in the proper contributions to the Welfare Plan. This process continued to occur in subsequent months.[8] For purposes of this proposed exemption, all excess amounts of money erroneously allocated to the Pension Plan during this period of time are described herein as ''the Mistaken Contributions''. The applicant represents that payments from the Escrow to the Pension Plan were utilized by ABPA to pay current disbursements by the Pension Plan, including such items as current pension benefits and ongoing operational expenses. Nonetheless, all financial reports from ABPA to the Trustees of each Plan erroneously reflected the proper contributions being allocated to the Pension Plan and the Welfare Plan. These erroneous financial reports, rather than documentation showing the actual amounts transferred to the Pension Plan, were delivered to the respective Boards of Trustees. Accordingly, the Boards of Trustees of the Plans were not aware of the fact that sums of money were being allocated erroneously to the Pension Plan from the Escrow. The Trustees were notified by the Auditor in late August, 1997. At that time, immediate instructions were made to correct the Mistaken Contributions.

5. On October 29, 1997, all excess sums paid erroneously to the Pension Plan were repaid to the Welfare Plan. The period of delay between the time of discovery of the error (i.e., August, 1997) and its correction was the time required by the Auditor to accurately investigate and calculate the amount necessary to correct the error. The total amount of the Mistaken Contributions was $796,983.29. This amount represented approximately 18.6% of the Welfare Plan's assets and 1.4% of the Pension Plan's assets.

[8] In this regard, the Department notes that section 404(a) of the Act requires, among other things, that a fiduciary discharge his duties with respect to a plan solely in the interest of the participants and beneficiaries and with the care, skill, prudence and diligence under the circumstances then prevailing that a prudent man acting in a like capacity and familiar with such matters would use in the conduct of an enterprise of a like character and with like aims. With respect to the actions and omissions of ABPA, the Department notes that no relief would be provided under the proposed exemption for any violation of the general fiduciary provisions of Part 4 of Title I of the Act.

6. The applicants represent that since the Mistaken Contributions were the result of unintended erroneous allocations by the Administrator of contributions by the Employers, they may be considered to come within section 403(c)(2)(A)(ii) of the Act, which would permit the return of the contributions within 6 months after the plan administrator discovered that the contributions were made by a mistake of fact or law.[9] As a result, the applicants are not seeking an exemption for the Mistaken Contributions or the repayment of their principal amount. Rather, the applicants are requesting an exemption merely for the proposed payment of interest by the Pension Plan to the Welfare Plan in connection with the treatment of these transactions as ''Mistaken Contributions'' in order to make the Welfare Plan ''whole'' for the Pension Plan's use of the money that was erroneously allocated by ABPA from the Escrow to the Pension Plan.

7. In addition to the Pension Plan's repayment of the principal amount of the Mistaken Contributions to the Welfare Plan, the Board of Trustees of the Pension Plan now proposes to pay interest to the Welfare Plan pursuant to an indemnification agreement (the Indemnification) with the Board of Trustees of the Welfare Plan. The Indemnification consists of an agreement to pay a reasonable rate of interest on the total amount of the Mistaken Contributions to reimburse the Welfare Plan for lost income. The interest rate to be paid by the Pension Plan will be established as a fair market rate by an independent bank. The Liberty Bank (the Bank) in Macon, Georgia, was contacted for the purpose of establishing such a market rate. The Bank is an independent bank which has no other relationship with the Plans. The Bank represents that an appropriate rate for such Mistaken Contributions would be 8.25 to 8.5% per annum. Accordingly, the Trustees of both Plans have agreed to utilize the rate of 8.5% per annum to reimburse the Welfare Plan for losses relating to the period of time it was denied access to the assets (i.e., $796,983.29).

8. The applicants represent that the Trustees of the Plans have repeatedly requested ABPA to provide a written explanation of the manner in which the Mistaken Contributions occurred, but ABPA has failed to provide any response. Due to dissatisfaction with ABPA's performance, the Trustees terminated ABPA's services effective August 31, 1997, and appointed a new administrative manager, Core Management Resources, Inc., of Macon, Georgia.

9. The applicants represent that no participant in either Plan experienced any reduction, deferment or delay in receipt of any benefit due from either Plan as a result of the errors. All benefits and expenses of each Plan were paid in a timely fashion by each respective Plan in the ordinary course of its business.

10. In summary, the applicants represent that the subject transactions satisfy the criteria contained in section 408(a) of the Act because: (a) The Mistaken Contributions were inadvertent transfers that occurred solely through the errors of the Plans' independent third party administrator, ABPA; (b) the Pension Plan repaid the principal amount of the Mistaken Contributions to the Welfare Plan as soon as possible after the error was discovered and properly calculated by the Auditor; (c) the amount of interest to be paid to the Welfare Plan on the Mistaken Contributions has been determined by an independent bank (i.e., the Bank) as a fair market rate of interest to reimburse the Welfare Plan for losses relating to the period of time it was denied access to the assets erroneously allocated to the Pension Plan; and (d) no participant in either the Welfare Plan or the Pension Plan experienced any reduction, deferment or delay in receipt of any benefit due from the Plan as a result of the transactions.

FOR FURTHER INFORMATION CONTACT: Gary H. Lefkowitz of the Department, telephone (202) 219–8881. (This is not a toll-free number.)

William M. Hitchcock SERP (DB) (the Plan) Located in Houston, Texas

[Application No. D–10605]

Proposed Exemption

The Department is considering granting an exemption under the authority of section 4975(c)(2) of the Code and in accordance with the procedures set forth in 29 CFR part 2570, subpart B (55 FR 32836, 32847, August 10, 1990). If the exemption is granted, the sanctions resulting from the application of section 4975 of the Code, by reason of section 4975(c)(1)(A) through (E) of the Code, shall not apply to the proposed sale by the Plan of 67,466 shares of stock (the Stock) in Thoratec Laboratories, Inc. (Thoratec) to William M. Hitchcock (Mr. Hitchcock), a disqualified person with respect to the Plan, provided the following conditions are satisfied: (a) The sale is a one-time transaction for cash; (b) the Plan pays no sales commissions or other expenses in connection with the transaction; (c) the Plan receives the fair market value of the Stock, as determined by reference to its most current listed price on the National Association of Securities Dealers Automated Quotation National Market System (NASDAQ) at the time of the transaction; and (d) Mr. Hitchcock is the only Plan participant to be affected by the transaction, and he desires that the transaction be consummated.[10]

Summary of Facts and Representations

1. The Plan is a defined benefit self-employed retirement plan with one participant, Mr. Hitchcock, who is the sole owner of the Plan sponsor. The Plan sponsor is a sole proprietorship which is engaged in the business of consulting. Mr. Hitchcock is also the Plan's trustee. As of March 18, 1998, the Plan had $468,873 in total assets.

2. On February 14, 1994, the Plan purchased 2,400 shares of the Stock at a price of $2.03 per share (i.e., for a total of $4,872). On April 5, 1995, the Plan purchased 200,000 shares of the Stock at a price of $1.30 per share (i.e., for a total of $260,000). On June 10, 1996, the Stock underwent a reverse stock split of 1/3 and, as a result, the Plan currently holds 67,466 shares of the Stock. Mr. Hitchcock is a director of Thoratec, and together he and the Plan own 1.8% of Thoratec.[11] The Stock currently constitutes approximately 93% of the Plan's assets.[12] The Stock is publicly traded on the NASDAQ.

[9] The Department expresses no opinion in this proposed exemption as to whether the contributions are subject to section 403(c)(2)(A)(ii) of the Act.

[10] Since Mr. Hitchcock is the sole owner of the Plan sponsor and the only participant in the Plan, there is no jurisdiction under Title I of the Act pursuant to 29 CFR 2510.3–3(b). However, there is jurisdiction under Title II of the Act pursuant to section 4975 of the Code.

[11] In this proposed exemption, the Department is expressing no opinion as to whether the Plan's acquisitions of the Stock constituted a prohibited transaction under section 4975 of the Code, nor is the Department herein proposing relief for any prohibited transaction which may have occurred as a result of such acquisitions of the Stock by the Plan. However, the purchases and holding of the Stock by the Plan raise questions under section 4975(c)(1)(D) and (E) of the Code. Section 4975(c)(1)(D) and (E) of the Code prohibits the use by or for the benefit of a disqualified person of the assets of a plan and prohibits a fiduciary from dealing with the assets of a plan in his own interest or for his own account. Mr. Hitchcock, as a director of Thoratec, may have had an interest in the acquisitions and holding of the Stock which may have affected his best judgment as a fiduciary of the Plan. In such circumstances, the transactions may have violated section 4975(c)(1)(D) and (E) of the Code. *See* Advisory Opinion 90–20A (June 15, 1990). Accordingly, to the extent there were violations of section 4975(c)(1)(D) and (E) of the Code with respect to the purchases and holding of the Stock by the Plan, the Department is extending no relief for these transactions herein.

[12] The Department notes that the Internal Revenue Service has taken the view that if a plan is exposed

3. Mr. Hitchcock now proposes to purchase the Stock from the Plan for cash. No commissions or other expenses will be paid by the Plan in connection with the sale. The Plan will receive the fair market value of the Stock, as determined by its most current listed price on the NASDAQ at the time of the sale. On March 12, 1998, the Stock was trading at a price of $7.00 per share. Therefore, based upon this per share trading price, Mr. Hitchcock would have paid the Plan $472,262 for the Stock (67,466 shares times $7.00 per share).

4. Mr. Hitchcock represents that the proposed sale would be advantageous to the Plan because it would increase the Plan's liquidity and diversify the Plan's assets. In addition, 66,666 shares of the Stock owned by the Plan are unregistered and subject to certain sale restrictions under Rule 144 of the Securities and Exchange Commission (SEC). The restricted Stock can be disposed of only in a private placement or in the public market over a period of years under the timing and volume restrictions of SEC Rule 144. As a result, all of the Plan's shares of the Stock may not be sold on the open market at the present time. These shares of the Stock were purchased by the Plan in a private placement. However, in any sale of the Plan's shares to a third party in a private placement, the purchaser would probably demand a significant discount off the NASDAQ listed price in order to acquire the shares. Therefore, by selling all of the Stock to Mr. Hitchcock for the most current listed price for each share of the Stock on the NASDAQ, the Plan will receive a premium for its shares at the time of the transaction.

5. In summary, the applicant represents that the proposed transaction satisfies the criteria of section 4975(c)(2) of the Code because: (a) The sale is a one-time transaction for cash; (b) no commissions or other expenses will be paid by the Plan in connection with the sale; (c) the Plan will receive the fair market value of the Stock, as determined by its most current listed price on the NASDAQ at the time of the sale; and (d) Mr. Hitchcock is the only Plan participant to be affected by the transaction, and he desires that the transaction be consummated.

Tax Consequences of the Transaction

The Department of the Treasury has determined that if a transaction between a qualified employee benefit plan and its sponsoring employer (or affiliate thereof) results in the plan either paying less than or receiving more than fair market value, such excess may be considered to be a contribution by the sponsoring employer to the plan, and therefore must be examined under the applicable provisions of the Internal Revenue Code, including sections 401(a)(4), 404 and 415.

Notice to Interested Persons: Since Mr. Hitchcock is the only Plan participant to be affected by the proposed transaction, the Department has determined that there is no need to distribute the notice of proposed exemption to interested persons. Comments and requests for a hearing are due within 30 days from the date of publication of this notice of proposed exemption in the **Federal Register**.

For Further Information Contact: Gary H. Lefkowitz of the Department, telephone (202) 219–8881. (This is not a toll-free number.)

General Information

The attention of interested persons is directed to the following:

(1) The fact that a transaction is the subject of an exemption under section 408(a) of the Act and/or section 4975(c)(2) of the Code does not relieve a fiduciary or other party in interest of disqualified person from certain other provisions of the Act and/or the Code, including any prohibited transaction provisions to which the exemption does not apply and the general fiduciary responsibility provisions of section 404 of the Act, which among other things require a fiduciary to discharge his duties respecting the plan solely in the interest of the participants and beneficiaries of the plan and in a prudent fashion in accordance with section 404(a)(1)(b) of the act; nor does it affect the requirement of section 401(a) of the Code that the plan must operate for the exclusive benefit of the employees of the employer maintaining the plan and their beneficiaries;

(2) Before an exemption may be granted under section 408(a) of the Act and/or section 4975(c)(2) of the Code, the Department must find that the exemption is administratively feasible, in the interests of the plan and of its participants and beneficiaries and protective of the rights of participants and beneficiaries of the plan;

(3) The proposed exemptions, if granted, will be supplemental to, and not in derogation of, any other provisions of the Act and/or the Code, including statutory or administrative exemptions and transitional rules. Furthermore, the fact that a transaction is subject to an administrative or statutory exemption is not dispositive of whether the transaction is in fact a prohibited transaction; and

(4) The proposed exemptions, if granted, will be subject to the express condition that the material facts and representations contained in each application are true and complete, and that each application accurately describes all material terms of the transaction which is the subject of the exemption.

Signed at Washington, DC, this 23rd day of June 1998.

Ivan Strasfeld,

Director of Exemption Determinations, Pension and Welfare Benefits Administration, Department of Labor.

[FR Doc. 98–17135 Filed 6–26–98; 8:45 am]

BILLING CODE 4510–29–P

to the risk of large losses because of the lack of diversification and the speculative nature of investments made by the Plan, such an investment strategy may raise questions in regard to the exclusive benefit rule under section 401(a) of the Code. For example, see Rev. Rul. 73–532, 1973–2 C.B. 128, which states, among other things, that the safeguards and diversity that a prudent investor would adhere to must be present in order for the ''exclusive-benefit-of-employees'' requirement to be met. However, the Department is expressing no opinion in this proposed exemption regarding whether violations of section 401(a) of the Code occurred as a result of the Plan's acquisition of investments that may be speculative in nature, such as the purchase of the Stock.

NATIONAL ARCHIVES AND RECORDS ADMINISTRATION

Agency Information Collection Activities: Submission for OMB Review; Comment Request

AGENCY: National Archives and Records Administration (NARA).

ACTION: Notice.

SUMMARY: NARA is giving public notice that the agency has submitted to OMB for approval the information collection described in this notice. The public is invited to comment on the proposed information collection pursuant to the Paperwork Reduction Act of 1995.

DATES: Written comments must be submitted to OMB at the address below on or before July 29, 1998.

ADDRESSES: Comments should be sent to: Office of Information and Regulatory Affairs, Office of Management and Budget, Attn: Ms. Maya Bernstein, Desk Officer for NARA, Washington, DC 20503.

FOR FURTHER INFORMATION CONTACT: Requests for additional information or copies of the proposed information collection and supporting statement should be directed to Tamee Fechhelm at telephone number 301–713–6730 or fax number 301–713–6913.

SUPPLEMENTARY INFORMATION: Pursuant to the Paperwork Reduction Act of 1995 (Public Law 104–13), NARA invites the general public and other Federal

agencies to comment on proposed information collections. NARA published a notice of proposed collection for this information collection on April 14, 1998 (63 FR 18235). No comments were received. NARA has submitted the described information collection to OMB for approval.

In response to this notice, comments and suggestions should address one or more of the following points: (a) whether the proposed information collection is necessary for the proper performance of the functions of NARA; (b) the accuracy of NARA's estimate of the burden of the proposed information collection; (c) ways to enhance the quality, utility, and clarity of the information to be collected; and (d) ways to minimize the burden of the collection of information on respondents, including the use of information technology. In this notice, NARA is soliciting comments concerning the following information collection:

Title: Military Personnel Records (MPR) Customer Satisfaction Survey.

OMB number: 3095–00XX.

Agency form number: N/A.

Type of review: Regular.

Affected public: Federal, state and local government agencies, veterans, and individuals who write the Military Personnel Records (MPR) facility for information from or copies of official military personnel files.

Estimated number of respondents: 21,333.

Estimated time per response: 15 minutes.

Frequency of response: On occasion (when respondent writes to MPR requesting information from official military personnel files).

Estimated total annual burden hours: 5,333 hours.

Abstract: The information collection is prescribed by EO 12862 issued September 11, 1993, which requires Federal agencies to survey their customers concerning customer service. The general purpose of this data collection is to initially support the business process reengineering (BPR) of the MPR reference service process and then provide MPR management with an ongoing mechanism for monitoring customer satisfaction. In particular, the purpose of the proposed MPR Customer Satisfaction Survey is to (1) provide baseline data concerning customer satisfaction with MPR's reference service process, (2) identify areas within the reference service process for improvement, and (3) provide MPR management with customer feedback on the effectiveness of BPR initiatives designed to improve customer service as they are implemented. In addition to supporting the BPR effort, the proposed MPR Customer Satisfaction Survey will help NARA in responding to performance planning and reporting requirements contained in the Government Performance and Results Act (GPRA).

Dated: June 23, 1998.

L. Reynolds Cahoon,

Assistant Archivist for Human Resources and Information Services.

[FR Doc. 98–17213 Filed 6–26–98; 8:45 am]

BILLING CODE 7515–01–P

NATIONAL ARCHIVES AND RECORDS ADMINISTRATION

Space Planning for the National Archives and Records Administration; Public Meeting

The National Archives and Records Administration announces the following meetings:

—Thursday, July, 9, 1998, from 1 p.m. to 3 p.m. at the National Archives and Records Administration, Mid Atlantic Region (Center City Philadelphia), 900 Market Street, Philadelphia, PA 19107–4292. For further information call 215–671–9027 or e-mail james.mouat@philfrc.nara.gov.

—Thursday, July 30, 1998, from 7 p.m. to 9 p.m. at the National Archives and Records Administration, Southeast Region, 1557 St. Joseph Avenue, East Point, GA 30344–2593. For further information call 404–763–7477 or e-mail james.mcsweeney@atlanta.nara.gov.

This is a series of meetings at which NARA is seeking public input for a study of its space needs for the next 10 years. NARA representatives will explain the reasons for undertaking a space plan, its objectives, and the planning process, and will invite comments and answer questions. In addition to helping NARA with its planning, this meeting is part of a National Performance Review initiative called *Conversations With America: My Government Listens*. NARA urges everyone interested to attend.

Reservations are not required. The meetings will be open to the public.

Dated: June 22, 1998.

John W. Carlin,

Archivist of the United States.

[FR Doc. 98–17215 Filed 6–26–98; 8:45 am]

BILLING CODE 7515–01–P

NATIONAL CREDIT UNION ADMINISTRATION

Sunshine Act Meeting

The National Credit Union Administration Board determined that its business required the deletion of the following item from the previously announced closed meeting (**Federal Register**, Vol. 63, No. 118, page 33735, Friday, June 19, 1998) scheduled for Tuesday, June 23, 1998.

3. Administrative Action under Part 704 of NCUA's Rules and Regulations. Closed pursuant to exemption (8).

The Board voted unanimously that agency business required that this item be deleted from the closed agenda and that no earlier announcement of this change was possible.

The National Credit Union Administration Board also determined that its business required the addition of the following two items to the closed agenda.

6. Administrative Action under Part 704 of NCUA's Rules and Regulations. Closed pursuant to exemption (8).

7. Administrative Action under Sections 120 and 209 of the Federal Credit Union Act. Closed pursuant to exemptions (6), (9)(B) and (10).

The Board voted unanimously that agency business required that these items be considered with less than the usual seven days notice, that they be closed to the public, and that no earlier announcement of these changes were possible.

The previously announced items were:

1. Administrative Action under Section 205 of the Federal Credit Union Act. Closed pursuant to exemption (8).

2. Administrative Actions under Section 206 of the Federal Credit Union Act. Closed pursuant to exemptions (4), (7) and (8).

3. Administrative Action under Part 704 of NCUA's Rules and Regulations. Closed pursuant to exemption (8).

4. Administrative Action under Part 745 of NCUA's Rules and Regulations. Closed pursuant to exemption (6).

5. Four (4) Personnel Actions. Closed pursuant to exemptions (2), (5), (6), (9)(B).

FOR FURTHER INFORMATION CONTACT: Becky Baker, Secretary of the Board, Telephone (703) 518–6304.

Becky Baker,

Secretary of the Board.

[FR Doc. 98–17304 Filed 6–24–98; 5:08 pm]

BILLING CODE 7535–01–M

NUCLEAR REGULATORY COMMISSION

[Docket Nos. 50–369 and 50–370]

Duke Energy Corporation; Notice of Consideration of Issuances of Amendments to Facility Operating Licenses, Proposed No Significant Hazards Consideration Determination, and Opportunity for a Hearing

The U.S. Nuclear Regulatory Commission (the Commission) is considering issuance of amendments to Facility Operating License Nos. NPF–9 and NPF–17 issued to Duke Energy Corporation (the licensee) for operation of the McGuire Nuclear Station, Units 1 and 2, located in Mecklenburg County, North Carolina.

The proposed amendments would revise Figure 5.1–1 of the Technical Specifications (TS) to show the location of the new meteorological tower. The proposed TS change does not change the related TS Section 5.1.1.

Before issuance of the proposed license amendments, the Commission will have made findings required by the Atomic Energy Act of 1954, as amended (the Act) and the Commission's regulations.

The Commission has made a proposed determination that the amendment request involves no significant hazards consideration. Under the Commission's regulations in 10 CFR 50.92, this means that operation of the facility in accordance with the proposed amendments would not (1) involve a significant increase in the probability or consequences of an accident previously evaluated; or (2) create the possibility of a new or different kind of accident from any accident previously evaluated; or (3) involve a significant reduction in a margin of safety. As required by 10 CFR 50.91(a), the licensee has provided its analysis of the issue of no significant hazards consideration, which is presented below:

1. Does the change involve a significant increase in the probability or consequences of an accident previously evaluated?

No. The proposed change involves the location of the meteorological tower. The meteorological tower is mainly used for post-accident radiological release assessment and does not impact the initiation or mitigation of previously analyzed accidents. No change in routine or accident radioactive release diffusion estimate methods is made. The new location is approximately twice as far as the old location from the reactor buildings. Within a radius of 60 meters of the new location, there is no significant structure that the tower can reach if it falls down. A fall of the tower due to natural or man-made causes will not adversely affect Category I structures such as the reactor buildings, auxiliary building, spent fuel pool buildings, diesel generator buildings, and control room. These structures have been analyzed for effect from tornado missiles comparable to or more severe than those possibly generated from a failed tower. The results of these analyses showed that no safety limit was exceeded due to tornado missiles.

The new location and tower do not involve a significant increase in the probability or consequences of an accident previously evaluated.

2. Does the change create the possibility of a new or different kind of accident from any accident previously evaluated?

No. The proposed change involves the location of the meteorological tower. The new tower, like the old one, is separated from other systems in the plant. No physical changes to other systems or changes in methods governing normal plant operation are made as a result of this proposed change. Failure of the new tower due to either man-made or natural causes should not create any new effects than those described above.

The new location and tower do not create the possibility of a new or different kind of accident from any accident previously evaluated.

3. Does this change involve a significant reduction in a margin of safety?

No. The proposed change involves the location of the meteorological tower. The proposed change does not involve any physical change to other systems in the plant and has no impact on any safety analysis assumptions. Therefore, this change does not involve a reduction in a margin of safety.

The NRC staff has reviewed the licensee's analysis and, based on this review, it appears that the three standards of 10 CFR 50.92(c) are satisfied. Therefore, the NRC staff proposes to determine that the amendment request involves no significant hazards consideration.

The Commission is seeking public comments on this proposed determination. Any comments received within 30 days after the date of publication of this notice will be considered in making any final determination.

Normally, the Commission will not issue the amendments until the expiration of the 30-day notice period. However, should circumstances change during the notice period such that failure to act in a timely way would result, for example, in derating or shutdown of the facility, the Commission may issue the license amendments before the expiration of the 30-day notice period, provided that its final determination is that the amendments involve no significant hazards consideration. The final determination will consider all public and State comments received. Should the Commission take this action, it will publish in the **Federal Register** a notice of issuance and provide for opportunity for a hearing after issuance. The Commission expects that the need to take this action will occur very infrequently.

Written comments may be submitted by mail to the Chief, Rules and Directives Branch, Division of Administrative Services, Office of Administration, U.S. Nuclear Regulatory Commission, Washington, DC 20555–0001, and should cite the publication date and page number of this **Federal Register** notice. Written comments may also be delivered to Room 6D59, Two White Flint North, 11545 Rockville Pike, Rockville, Maryland, from 7:30 a.m. to 4:15 p.m. Federal workdays. Copies of written comments received may be examined at the NRC Public Document Room, the Gelman Building, 2120 L Street, NW., Washington, DC.

The filing of requests for hearing and petitions for leave to intervene is discussed below.

By July 29, 1998, the licensee may file a request for a hearing with respect to issuance of the amendments to the subject facility operating license and any person whose interest may be affected by this proceeding and who wishes to participate as a party in the proceeding must file a written request for a hearing and a petition for leave to intervene. Requests for a hearing and a petition for leave to intervene shall be filed in accordance with the Commission's ''Rules of Practice for Domestic Licensing Proceedings'' in 10 CFR Part 2. Interested persons should consult a current copy of 10 CFR 2.714 which is available at the Commission's Public Document Room, the Gelman Building, 2120 L Street, NW., Washington, DC, and at the local public document room located at the J. Murrey Atkins Library, University of North Carolina at Charlotte, 9201 University City Boulevard, Charlotte, North Carolina. If a request for a hearing or petition for leave to intervene is filed by the above date, the Commission or an Atomic Safety and Licensing Board, designated by the Commission or by the Chairman of the Atomic Safety and Licensing Board Panel, will rule on the request and/or petition; and the

Secretary or the designated Atomic Safety and Licensing Board will issue a notice of hearing or an appropriate order.

As required by 10 CFR 2.714, a petition for leave to intervene shall set forth with particularity the interest of the petitioner in the proceeding, and how that interest may be affected by the results of the proceeding. The petition should specifically explain the reasons why intervention should be permitted with particular reference to the following factors: (1) the nature of the petitioner's right under the Act to be made party to the proceeding; (2) the nature and extent of the petitioner's property, financial, or other interest in the proceeding; and (3) the possible effect of any order which may be entered in the proceeding on the petitioner's interest. The petition should also identify the specific aspect(s) of the subject matter of the proceeding as to which petitioner wishes to intervene. Any person who has filed a petition for leave to intervene or who has been admitted as a party may amend the petition without requesting leave of the Board up to 15 days prior to the first prehearing conference scheduled in the proceeding, but such an amended petition must satisfy the specificity requirements described above.

Not later than 15 days prior to the first prehearing conference scheduled in the proceeding, a petitioner shall file a supplement to the petition to intervene which must include a list of the contentions which are sought to be litigated in the matter. Each contention must consist of a specific statement of the issue of law or fact to be raised or controverted. In addition, the petitioner shall provide a brief explanation of the bases of the contention and a concise statement of the alleged facts or expert opinion which support the contention and on which the petitioner intends to rely in proving the contention at the hearing. The petitioner must also provide references to those specific sources and documents of which the petitioner is aware and on which the petitioner intends to rely to establish those facts or expert opinion. Petitioner must provide sufficient information to show that a genuine dispute exists with the applicant on a material issue of law or fact. Contentions shall be limited to matters within the scope of the amendments under consideration. The contention must be one which, if proven, would entitle the petitioner to relief. A petitioner who fails to file such a supplement which satisfies these requirements with respect to at least one contention will not be permitted to participate as a party.

Those permitted to intervene become parties to the proceeding, subject to any limitations in the order granting leave to intervene, and have the opportunity to participate fully in the conduct of the hearing, including the opportunity to present evidence and cross-examine witnesses.

If a hearing is requested, the Commission will make a final determination on the issue of no significant hazards consideration. The final determination will serve to decide when the hearing is held.

If the final determination is that the amendment request involves no significant hazards consideration, the Commission may issue the amendments and make them immediately effective, notwithstanding the request for a hearing. Any hearing held would take place after issuance of the amendments.

If the final determination is that the amendment request involves a significant hazards consideration, any hearing held would take place before the issuance of any amendment.

A request for a hearing or a petition for leave to intervene must be filed with the Secretary of the Commission, U.S. Nuclear Regulatory Commission, Washington, DC 20555–0001, Attention: Rulemakings and Adjudications Staff, or may be delivered to the Commission's Public Document Room, the Gelman Building, 2120 L Street, NW., Washington, DC, by the above date. A copy of the petition should also be sent to the Office of the General Counsel, U.S. Nuclear Regulatory Commission, Washington, DC 20555–0001, and to Mr. Albert Carr, Duke Energy Corporation, 422 South Church Street, Charlotte, North Carolina, attorney for the licensee.

Nontimely filings of petitions for leave to intervene, amended petitions, supplemental petitions and/or requests for hearing will not be entertained absent a determination by the Commission, the presiding officer or the presiding Atomic Safety and Licensing Board that the petition and/or request should be granted based upon a balancing of the factors specified in 10 CFR 2.714(a)(1)(I)–(v) and 2.714(d).

For further details with respect to this action, see the application for amendments dated March 3, 1998, as supplemented by letters dated April 24 and May 7, 1998, which are available for public inspection at the Commission's Public Document Room, the Gelman Building, 2120 L Street, NW., Washington, DC, and at the local public document room located at the J. Murrey Atkins Library, University of North Carolina at Charlotte, 9201 University City Boulevard, Charlotte, North Carolina.

Dated at Rockville, Maryland, this 23rd day of June 1998.

For the Nuclear Regulatory Commission.

Frank Rinaldi,

Project Manager, Project Directorate II–2, Division of Reactor Projects—I/II, Office of Nuclear Reactor Regulation.

[FR Doc. 98–17217 Filed 6–26–98; 8:45 am]

BILLING CODE 7590–01–P

NUCLEAR REGULATORY COMMISSION

[Docket Nos. 50–295 and 50–304]

Commonwealth Edison Company; Zion Nuclear Power Station, Units 1 and 2; Environmental Assessment and Finding of No Significant Impact

The U.S. Nuclear Regulatory Commission (the Commission) is considering issuance of an exemption from certain requirements of its regulations for Facility Operating License Nos. DRP–39 and DRP–48, issued to Commonwealth Edison Company (ComEd, the licensee), for operation of the Zion Nuclear Power Station, Units 1 and 2, located in Lake County, Illinois.

Environmental Assessment

Identification of the Proposed Action

By letter dated March 12, 1998, ComEd requested an exemption from certain requirements of 10 CFR 50.71, ''Maintenance of records, making of reports,'' for Zion Nuclear Power Station, Units 1 and 2. The proposed action would permit ComEd to extend the time interval for the submittal of Zion Station's Updated Final Safety Analysis Report (UFSAR). The next Zion Nuclear Power Station Final Safety Analysis Report (FSAR) update is due in July 1998. The proposed exemption would allow this date to be extended to December 1998.

The Need for the Proposed Action

Pursuant to 10 CFR 50.34(b) each application for a license to operate a facility shall include an FSAR. This report shall include information that describes the facility, presents the design bases and the limits on its operation and presents a safety analysis of the structure, systems and components of the facility. This information and description is needed to permit understanding of the system designs and their relationships to safety evaluations.

Pursuant to 10 CFR 50.71(e) all light water nuclear power reactors shall

update their FSARs periodically. According to 10 CFR 50.71(e)(4), the time interval for the subsequent FSAR updates must not exceed 24 months. The last full update of the Zion UFSAR was submitted to the NRC on July 5, 1996. Consequently, the next update would be required to be submitted no later than July 1998. However, ComEd is requesting an exemption from this requirement to allow them to update the FSAR to reflect the present condition of the units.

By letters dated February 13, 1998, and March 9, 1998, ComEd informed the NRC that Zion Nuclear Power Station, Units 1 and 2, have permanently ceased operations and both units are completely defueled and all fuel has been placed in the spent fuel pool for long-term storage. By letter dated May 4, 1998, the NRC acknowledged Zion's permanent cessation of power operation and permanent removal of fuel from the reactor vessels.

Many of the systems and components previously required for safety are no longer needed because the Zion units are permanently shut down. Therefore, updating the current FSAR will provide a description of components and systems that are no longer relevant to safety. Instead ComEd has proposed and committed to prepare and submit an update to the FSAR reflecting the permanently defueled condition of Zion Nuclear Power Station, Units 1 and 2, by December 31, 1998. This update will become Zion's Defueled Safety Analysis Report (DSAR).

Because ComEd's board decision on January 14, 1998, to shut down Zion was unexpected, ComEd staff did not have adequate time to develop the DSAR. Therefore, ComEd is requesting an extension of the update interval to allow sufficient time to develop and submit the DSAR. In their letter dated March 12, 1998, ComEd stated that many of the technical, administrative, and management resources needed to develop a DSAR are the same as those that would be involved in updating the FSAR. Consequently, updating the current FSAR by July 1998 would result either in a delay in developing a DSAR or in the expenditure of significant additional resources to develop a DSAR while preparing an UFSAR submittal in parallel.

Based on the information provided above, the extension of time interval from July 1998 to December 1998 for the submittal of the UFSAR would have no impact on the ability of systems, structures and components to perform the safety functions required with the plant permanently shut down, nor would it affect the safety of activities conducted with the facility in this condition. The proposed time exemption will not affect the potential for undesirable impacts to the environment.

Environmental Impacts of the Proposed Action

The proposed action involves administrative activities unrelated to plant operation.

The proposed action will not result in an increase in the probability or consequences of accidents or result in a change in occupational or offsite dose. Therefore, there are no significant radiological impacts associated with the proposed action.

The proposed action will not result in a change in nonradiological plant effluents and will have no other nonradiological environmental impact.

Accordingly, the Commission concludes that there are no environmental impacts associated with this action.

Alternatives to the Proposed Action

Since the Commission has concluded there are no significant environmental impacts associated with the proposed action, any alternatives with equal or greater environmental impact need not be evaluated. As an alternative to the proposed action, the staff considered denial of the proposed action. Denial of the application would result in no change in current environmental impacts. The environmental impacts of the proposed action and the alternative action are similar.

Alternative Use of Resources

This action does not involve the use of any resources not previously considered in the Final Environmental Statement for the Zion Nuclear Power Station.

Agencies and Persons Consulted

In accordance with its stated policy, on June 18, 1998, the staff consulted with the Illinois State official, Frank Niziolek of the Illinois Department of Nuclear Safety, regarding the environmental impact of the proposed action. The State official had no comments.

Finding of No Significant Impact

Based upon the environmental assessment, the Commission concludes that the proposed action will not have a significant effect on the quality of the human environment. Accordingly, the Commission has determined not to prepare an environmental impact statement for the proposed action.

For further details with respect to the proposed action, see the licensee's letter dated March 12, 1998, which is available for public inspection at the Commission's Public Document Room, The Gelman Building, 2120 L Street, NW., Washington, DC, and at the local public document room located at the Waukegan Public Library, 126 N. County Street, Waukegan, Illinois 60085.

Dated at Rockville, Maryland, this 24th day of June, 1998.

For the Nuclear Regulatory Commission.

Ramin R. Assa,

Project Manager, Project Directorate III–2, Division of Reactor Projects III/IV, Office of Nuclear Reactor Regulation.

[FR Doc. 98–17219 Filed 6–26–98; 8:45 am]

BILLING CODE 7590–01–P

NUCLEAR REGULATORY COMMISSION

[Docket No. 50–309]

Maine Yankee Atomic Power Company, Maine Yankee Atomic Power Station; Environmental Assessment and Finding of No Significant Impact

The U.S. Nuclear Regulatory Commission (the Commission) is considering issuance of an exemption from certain requirements of its regulations to Facility Operating License No. DPR–36, a license held by the Maine Yankee Atomic Power Company (MYAPC or the licensee). The exemption would apply to the Maine Yankee Atomic Power Station, a permanently shutdown plant located at the MYAPC site in Lincoln County, Maine.

Environmental Assessment

Identification of the Proposed Action

The proposed exemption would modify security requirements to eliminate certain equipment, to relocate certain equipment, to modify certain procedures, and reduce the number of armed responders, due to the permanently shutdown and defueled status of the Maine Yankee facility.

The proposed action is in accordance with the licensee's application dated November 25, 1997. The requested action would grant an exemption from certain requirements of 10 CFR 73.55, ''Requirements for Physical Protection of Licensed Activities in Nuclear Power Plant Reactors against Radiological Sabotage.''

The Need for the Proposed Action

Maine Yankee was shut down in December 1996. On August 7, 1997, the licensee informed the Commission that it had decided to permanently cease

operations at Maine Yankee Atomic Power Station and that all fuel had been permanently removed from the reactor. In accordance with 10 CFR 50.82(a)(2), the certifications in the letter modified the facility operating license to permanently withdraw MYAPC's authority to operate the reactor and to load fuel in the reactor vessel. In this permanently shutdown condition, the facility poses a reduced risk to public health and safety. Due to this reduced risk, certain requirements of 10 CFR 73.55 are no longer appropriate. An exemption is required from portions of 10 CFR 73.55 to allow the licensee to implement a revised Defueled Security Plan that is appropriate for the permanently shutdown and defueled reactor facility.

Environmental Impact of the Proposed Action

The Commission has completed its evaluation of the proposed action. The Commission concludes that exemption from certain portions of 10 CFR 73.55 are acceptable given the reduced consequences of the threat to a defueled reactor site with respect to public health and safety from an act of sabotage resulting in the release of radioactive material contained in the spent fuel.

The proposed change will not increase the probability or consequences of accidents, no changes are being made in the types of effluents that may be released offsite, and there is no significant increase in the allowable individual or cumulative occupational exposure. Accordingly, the Commission concludes that there are no significant radiological environmental impacts associated with the proposed action.

With regard to potential non-radiological impacts, the proposed action does involve features located entirely with the restricted area as defined in 10 CFR Part 20. It does not affect non-radiological plant effluents and has no other environmental impact. Therefore, the Commission concludes that there are no significant non-radiological impacts associated with the proposed action.

Alternatives to the Proposed Action

Since the Commission has concluded that there is no measurable environmental impact associated with the proposed action, any alternative with equal or greater environmental impact need not be evaluated. The principal alternative to the action would be to deny the request. Denial of the exemption request would result in no change in current environmental impacts. The environmental impacts of the proposed action and the alternative action are similar.

Alternative Use of Resources

This action does not involve the use of resources not previously considered in the Final Environmental Statement related to Operation of Maine Yankee Atomic Power Station, (July 1972).

Agencies and Persons Consulted

In accordance with its stated policy, on May 14, 1998, the NRC staff consulted with Mr. Patrick Dostie of the State of Maine, Department of Human Services, regarding the environmental impact of the proposed action. The State official had no comments.

Finding of No Significant Impact

Based upon the environmental assessment, the Commission concludes that the proposed action will not have a significant effect on the quality of the human environment. Accordingly, the Commission has determined not to prepare an environmental impact statement for the proposed action.

For further details with respect to this action, see the licensee's letter, dated November 25, 1997, which is available for public inspection at the Commission Public Document Room, Gelman Building, 2120 L Street, NW., Washington, DC, and at the Local Public Document Room at the Wiscasset Public Library, High Street, Post Office Box 367, Wiscasset, Maine 04578.

Dated at Rockville, Maryland, this 23rd day of June 1998.

For the Nuclear Regulatory Commission.

Seymour H. Weiss,

Director, Non-Power Reactors and Decommissioning Project Directorate, Division of Reactor Program Management, Office of Nuclear Reactor Regulation.

[FR Doc. 98–17218 Filed 6–26–98; 8:45 am]

BILLING CODE 7590–01–P

NUCLEAR REGULATORY COMMISSION

[Docket Nos. 70–7001; 70–7002]

Procedures for Managing Gaseous Diffusion Plant Backfit Requirements; Notice of Availability

On March 26, 1997, the U.S. Nuclear Regulatory Commission (NRC) published a notice of availability of the Office of Nuclear Material Safety and Safeguards (NMSS) Policy and Procedures Letter 1–53, ''GDP Plant Specific and Generic Backfit Management.'' This policy and procedures letter contains guidance and criteria for implementing the Gaseous Diffusion Plant backfit requirements of 10 CFR Part 76.76.

NRC received public comments on NMSS Policy and Procedures Letter 1–53, and has issued a revised version. This revised policy and procedures letter is available for inspection at the NRC Public Document Room, 2120 L Street NW (lower level), Washington, DC; the Paducah Public Library, 555 Washington Street, Paducah, Kentucky 42003 (Docket No. 70–7001); and the Portsmouth Public Library, 1220 Gallia Street, Portsmouth, Ohio 45662 (Docket No. 70–7002).

For further information, contact Tom Wenck, Office of Nuclear Material Safety and Safeguards, U.S. Nuclear Regulatory Commission, Washington, DC 20555, telephone (301) 415–8088.

Dated at Rockville, Maryland this 15th day of June 1998.

For the Nuclear Regulatory Commission.

Malcolm R. Knapp,

Acting Director, Office of Nuclear Material Safety and Safeguards.

[FR Doc. 98–17216 Filed 6–26–98; 8:45 am]

BILLING CODE 7590–01–M

NUCLEAR REGULATORY COMMISSION

Advisory Committee on Reactor Safeguards; Subcommittee Meeting on Plant License Renewal; Notice of Meeting

The ACRS Subcommittee on Plant License Renewal will hold a meeting on July 16, 1998, Room T–2B3, 11545 Rockville Pike, Rockville, Maryland.

The entire meeting will be open to public attendance.

The agenda for the subject meeting shall be as follows:

Thursday, July 16, 1998—8:30 a.m. until the conclusion of business

The Subcommittee will discuss the NRC staff's activities associated with license renewal, proposed staff's plans and schedule for reviewing the license renewal application and related safety issues. The Subcommittee will also discuss the ACRS involvement in reviewing the license renewal submittal and related matters. The purpose of this meeting is to gather information, analyze relevant issues and facts, and to formulate proposed positions and actions, as appropriate, for deliberation by the full Committee.

Oral statements may be presented by members of the public with the concurrence of the Subcommittee Chairman; written statements will be accepted and made available to the Committee. Electronic recordings will

be permitted only during those portions of the meeting that are open to the public, and questions may be asked only by members of the Subcommittee, its consultants, and staff. Persons desiring to make oral statements should notify the cognizant ACRS staff engineer named below five days prior to the meeting, if possible, so that appropriate arrangements can be made.

During the initial portion of the meeting, the Subcommittee, along with any of its consultants who may be present, may exchange preliminary views regarding matters to be considered during the balance of the meeting.

The Subcommittee will then hear presentations by and hold discussions with representatives of the NRC staff, its consultants, and other interested persons regarding this review.

Further information regarding topics to be discussed, whether the meeting has been canceled or rescheduled, and the Chairman's ruling on requests for the opportunity to present oral statements and the time allotted therefor can be obtained by contacting the cognizant ACRS staff engineer, Dr. Medhat El-Zeftawy (telephone 301/415–6889) between 7:30 a.m. and 4:15 p.m. (EDT). Persons planning to attend this meeting are urged to contact the above named individual one or two working days prior to the meeting to be advised of any potential changes in the proposed agenda, etc., that may have occurred.

Dated: June 23, 1998.

Sam Duraiswamy,

Chief, Nuclear Reactors Branch.

[FR Doc. 98–17220 Filed 6–26–98; 8:45 am]

BILLING CODE 7590–01–P

NUCLEAR REGULATORY COMMISSION

Advisory Committee on Reactor Safeguards; Subcommittee Meeting on Reliability and Probabilistic Risk Assessment; Notice of Meeting

The ACRS Subcommittee on Reliability and Probabilistic Risk Assessment will hold a meeting on July 17, 1998, Room T–2B3, 11545 Rockville Pike, Rockville, Maryland.

The entire meeting will be open to public attendance.

The agenda for the subject meeting shall be as follows:

Friday, July 17, 1998–8:30 a.m. until the conclusion of business

The Subcommittee will discuss issues in the Staff Requirements Memorandum dated April 20, 1998, regarding situation-specific cases where probabilistic risk assessment (PRA) results and insights have improved the existing regulatory system and specific areas in which PRA, when applied properly, can have a positive impact on the regulatory system. The purpose of this meeting is to gather information, analyze relevant issues and facts, and to formulate proposed positions and actions, as appropriate, for deliberation by the full Committee.

Oral statements may be presented by members of the public with the concurrence of the Subcommittee Chairman; written statements will be accepted and made available to the Committee. Electronic recordings will be permitted only during those portions of the meeting that are open to the public, and questions may be asked only by members of the Subcommittee, its consultants, and staff. Persons desiring to make oral statements should notify the cognizant ACRS staff engineer named below five days prior to the meeting, if possible, so that appropriate arrangements can be made.

During the initial portion of the meeting, the Subcommittee, along with any of its consultants who may be present, may exchange preliminary views regarding matters to be considered during the balance of the meeting.

The Subcommittee will then hear presentations by and hold discussions with representatives of the NRC staff, its consultants, and other interested persons regarding this review.

Further information regarding topics to be discussed, whether the meeting has been canceled or rescheduled, and the Chairman's ruling on requests for the opportunity to present oral statements and the time allotted therefor can be obtained by contacting the cognizant ACRS staff engineer, Mr. Michael T. Markley (telephone 301/415–6885) between 7:30 a.m. and 4:15 p.m. (EDT). Persons planning to attend this meeting are urged to contact the above named individual one or two working days prior to the meeting to be advised of any potential changes to the agenda, etc., that may have occurred.

Dated: June 23, 1998.

Sam Duraiswamy,

Chief, Nuclear Reactors Branch.

[FR Doc. 98–17221 Filed 6–26–98; 8:45 am]

BILLING CODE 7590–01–P

POSTAL RATE COMMISSION

Postal Facility Visit

AGENCY: Postal Rate Commission.

ACTION: Notice of visit.

SUMMARY: Arrangements have been made for members of the Commission and certain advisory staff members to visit the Postal Service's facility in Merrifield, Virginia. The purpose is to observe mail processing, including management operating data system (MODS) data collection. Information obtained during the visit will assist Commissioners and staff in the execution of their duties.

DATES: The tour is scheduled for Monday, June 29, 1998.

FOR FURTHER INFORMATION CONTACT: Steven L. Sharfman, General Counsel, (202) 789–6820.

SUPPLEMENTARY INFORMATION: A report of the visit will be filed in the Commission's Docket Room.

Authority: 39 U.S.C. 404(b), 3603, 3622–3624, 3661, 3662.

Dated: June 23, 1998.

Margaret P. Crenshaw,

Secretary.

[FR Doc. 98–17164 Filed 6–26–98; 8:45 am]

BILLING CODE 7710–FW–M

RAILROAD RETIREMENT BOARD

Agency Forms Submitted for OMB Review

SUMMARY: In accordance with the Paperwork Reduction Act of 1995 (44 U.S.C. Chapter 35), the Railroad Retirement Board (RRB) has submitted the following proposal(s) for the collection of information to the Office of Management and Budget for review and approval.

Summary of Proposal(s)

(1) *Collection title:* Certification Regarding Rights to Unemployment Benefits.

(2) *Form(s) submitted:* UI–45.

(3) *OMB Number:* 3220–0079.

(4) *Expiration date of current OMB clearance:* 9/30/1998.

(5) *Type of request:* Revision of a currently approved collection.

(6) *Respondents:* Individuals or households, business or other for profit.

(7) *Estimated annual number of respondents:* 1,950.

(8) *Total annual responses:* 2,900.

(9) *Total annual reporting hours:* 487.

(10) *Collection description:* In administering the disqualification for the voluntary leaving of work provision of Section 4 of the Railroad Unemployment Insurance Act, the Railroad Retirement Board investigates an unemployment claim that indicates the claimant left voluntarily. The certification obtains information needed to determine if the leaving was for good cause.

Additional Information or Comments

Copies of the form and supporting documents can be obtained from Chuck Mierzwa, the agency clearance officer (312–751–3363). Comments regarding the information collection should be addressed to Ronald J. Hodapp, Railroad Retirement Board, 844 North Rush Street, Chicago, Illinois 60611–2092 and the OMB reviewer, Laura Oliven (202–395–7316), Office of Management and Budget, Room 10230, New Executive Office Building, Washington, DC 20503.

Chuck Mierzwa,

Clearance Officer.

[FR Doc. 98–17230 Filed 6–26–98; 8:45 am]

BILLING CODE 7905–01–P

SECURITIES AND EXCHANGE COMMISSION

Proposed Collection; Comment Request

Upon Written Request, Copies Available From: Securities and Exchange Commission, Office of Filings and Information Services, Washington, DC 20549.

Extension: Rule 17a–5, Form X–17A–5, SEC File No. 270–155; OMB Control No. 3235–0123, Rule 17a–5(c), SEC File No. 270–199, OMB Control No. 3235–0199; Rule 17a–7, SEC File No. 270–147, OMB Control No. 3235–0131.

Notice is hereby given that pursuant to the Paperwork Reduction Act of 1995 (44 U.S.C. 3501 *et seq.*), the Securities and Exchange Commission (''Commission'') is soliciting comments on the collection of information summarized below. The Commission plans to submit these existing collections of information to the Office of Management and Budget for extension and approval.

Rule 17a–5 under the Securities Exchange Act of 1934 (''Exchange Act'') (''Act'') is the basic reporting rule for brokers and dealers, and Form X–17A–5, the Financial and Operational Combined Uniform Single Report, is the basic document for reporting the financial and operational condition of securities brokers and dealers.

The staff estimates that approximately 7,765 respondents respond to this collection of information 39,895 times annually, with a total burden of 12 hours for each response, based upon past submissions. The staff estimates that the average number of hours necessary to comply with the requirements of Rule 17a–5 is 478,740 hours. The average cost per hour is $100. Therefore, the total cost of compliance for the respondents is $47,874,000.

Rule 17a–5(c) under the Exchange Act requires certain brokers and dealers to provide statements of financial condition to their customers. It is estimated that approximately 750 broker and dealer respondents incur an average burden of 294,444 hours per year to comply with this rule.

Rule 17a–7 under the Exchange Act requires non-resident brokers or dealers to maintain in the United States complete and current copies of books and records required to be maintained under any rule adopted under the Act. Alternatively, Rule 17a–7 provides that the non-resident brokers or dealers may sign a written undertaking to furnish the requisite books and records to the Commission upon demand.

There are approximately 86 non-resident brokers and dealers. Based on the Commission's experience in this area, it is estimated that the average amount of time necessary to preserve the books and records in the United States as required by Rule 17a–7 is one hour per year. Accordingly, the total burden is 86 hours annually.

Written comments are invited on: (a) whether the proposed collection of information is necessary for the proper performance of the functions of the agency, including whether the information shall have practical utility; (b) the accuracy of the agency's estimate of the burden of the proposed collection of information; (c) ways to enhance the quality, utility, and clarity of the information to be collected; and (d) ways to minimize the burden of the collection of information on respondents, including through the use of automated collection techniques or other forms of information technology. Consideration will be given to comments and suggestions submitted in writing within 60 days of this publication.

Direct your written comments to Michael E. Bartell, Associate Executive Director, Office of Information Technology, Securities and Exchange Commission, 450 5th Street, NW Washington, DC 20549.

Dated: June 22, 1998.

Margaret H. McFarland,

Deputy Secretary.

[FR Doc. 98–17235 Filed 6–26–98; 8:45 am]

BILLING CODE 8010–01–M

SECURITIES AND EXCHANGE COMMISSION

[Release 34–40112; File No. 600–24]

Self-Regulatory Organizations; Delta Clearing Corp.; Notice of Filing and Order Approving a Request for Extension of Temporary Registration as a Clearing Agency

June 23, 1998.

Notice is hereby given that on June 12, 1998, Delta Clearing Corp. (''DCC'') filed with the Securities and Exchange Commission (''Commission'') an application pursuant to Section 19(a) of the Securities Exchange Act of 1934 (''Act'')[1] to extend DCC's temporary registration as a clearing agency.[2] The Commission is publishing this notice and order to solicit comments from interested persons and to extend DCC's temporary registration as a clearing agency through July 31, 1999.

On January 12, 1990, pursuant to Sections 17A and 19(a) of the Act[3] and Rule 17Ab2–1(c) thereunder,[4] the Commission granted DCC's application for registration as a clearing agency on a temporary basis for a period of thirty-six months.[5] Since that time, the Commission has extended DCC's temporary registration through July 31, 1998.[6] DCC now requests that the Commission grant an extension of DCC's temporary registration as a clearing agency, subject to the same terms and conditions expressed in previous orders granting and extending DCC's temporary registration,[7] for a period of twelve months or for such longer period as the Commission deems appropriate.

One of the primary reasons for DCC's registration as a clearing agency was to enable it to provide for the safe and efficient clearance and settlement of transactions involving the over-the-counter trading of options on U.S. Treasury securities. Since that time, the Commission has approved DCC's request to provide clearance and settlement services for repurchase agreement transactions involving U.S.

[1] 15 U.S.C. 78s(a).

[2] Letter from Stephen K. Lynner, Delta Clearing Corp. (June 11, 1998).

[3] 15 U.S.C. 78q–1 and 78s(a).

[4] 17 CFR 240.17Ab2–1(c).

[5] Securities Exchange Act Release No. 27611 (January 12, 1990), 55 FR 1890. Prior to a 1996 name change, DCC was named Delta Government Options Corp.

[6] Securities Exchange Act Release Nos. 38869 (July 24, 1997) 62 FR 40871 (extension until July 31, 1998); 31856 (February 11, 1993), 58 FR 9005 (extension until January 12, 1995); 35198 (January 6, 1995), 60 FR 3286 (extension until January 31, 1997); and 38224 (January 31, 1997), 62 FR 5869 (extension until July 31, 1997).

[7] *Supra* note 6.

Treasury securities as the underlying instrument.[8] Currently, repurchase agreement transactions constitute the majority of the transactions cleared by DCC.

As a part of its temporary registration, DCC was granted a temporary exemption from the requirements of Section 17A(b)(3)(C),[9] which requires that the rules of a clearing agency assure the fair representation of its shareholders or members and participants in the selection of its directors and administration of its affairs. While Commission staff and DCC staff have had ongoing discussions on DCC's proposed method of complying with Section 17A(b)(3)(C), the Commission believes that the issue of DCC's compliance with the fair representation requirements should be completely resolved before DCC receives permanent registration as a clearing agency under Section 17A(b) of the Act.[10]

In light of DCC's past performance, the Commission believes that DCC complies with the statutory prerequisites for registration as a clearing agency contained in Section 17A(b)(3) of the Act except for the fair representation requirement discussed above.[11] Therefore, the Commission believes that DCC should continue to be registered on a temporary basis. Comments received during DCC's temporary registration will be considered in determining whether DCC should receive permanent registration as a clearing agency.

Interested persons are invited to submit written data, views, and arguments concerning the foregoing application. Persons making written submissions should file six copies thereof with the Secretary, Securities and Exchange Commission, 450 Fifth Street, NW., Washington, DC 20549. Copies of the application and all written comments will be available for inspection and copying at the Commission's Public Reference Room 450 Fifth Street, NW., Washington, DC 20549. All submissions should refer to the File No. 600–24 and should be submitted by July 29, 1998.

It is therefore ordered, pursuant to Section 19(a) of the Act, that DCC's registration as a clearing agency (File No. 600–24) be and hereby is temporarily approved through July 31, 1999.

[8] Securities Exchange Act Release No. 36367 (October 13, 1995), 60 FR 54095.

[9] 15 U.S.C. 78q–1(b)(3)(C).

[10] 15 U.S.C. 78q–1(b).

[11] 15 U.S.C. 78q–1(b)(3).

For the Commission by the Division of Market Regulation, pursuant to delegated authority.[12]

Margaret H. McFarland,

Deputy Secretary.

[FR Doc. 98–17234 Filed 6–26–98; 8:45 am]

BILLING CODE 8010–01–M

SECURITIES AND EXCHANGE COMMISSION

[Release No. 34–40109; File No. SR–NASD–97–77]

Self-Regulatory Organizations; National Association of Securities Dealers, Inc.; Order Granting Approval to Proposed Rule Change Relating to the Arbitration of Employment Discrimination Claims

June 22, 1998.

I. Introduction

On October 17, 1997, the National Association of Securities Dealers, Inc. (''NASD'' or ''Association''), by and through its wholly owned subsidiary NASD Regulation, submitted to the Securities and Exchange Commission (''Commission''), pursuant to Section 19(b)1) of the Securities Exchange Act of 1934 (''Act'')[1] and Rule 19b–4 thereunder,[2] a proposed rule change to amend Rule 10201 of the NASD's Code of Arbitration Procedure (''Code'') to remove the requirement to arbitrate statutory claims of employment discrimination.

Notice of the proposed rule change, together with the substance of the proposal, was published for comment in Securities Exchange Act Release No 39421 (December 10, 1997), 62 FR 66164 (December 17, 1997). Nine comment letters were received on the proposal.[3] NASD Regulation subsequently filed Amendment No. 2 to the proposed rule filing on April 15, 1998.[4]

II. Description

The proposed rule change will modify the current requirement that associated persons arbitrate all disputes arising out of their employment or termination of employment with a member broker/dealer. The proposed rule provides that associated persons are no longer required, solely by virtue of their association or their registration with the NASD, to arbitrate claims of statutory employment discrimination. Associated persons still will be required to arbitrate other employment-related claims, as well as any business-related claims involving investors or other persons.

Background

The requirement for associated persons to register with the NASD arises from Section 15A(g)(3)(B) of the Act, which provides that the NASD may ''require a natural person associated with a member, or any class of such natural persons, to be registered with the association in accordance with procedures so established [by the rules of the association].'' The registration requirement for associated persons who effect securities transactions was made mandatory by Rule 15b7–1 under the Act in 1993.[5] The NASD, other self-regulatory organizations (''SROs''), and

[12] 17 CFR 200.30–3(a)(16).

[1] 15 U.S.C. 78s(b)(1).

[2] 17 CFR 240.19b–4.

[3] Letter from Dennis C. Vacco, Attorney General of the State of New York (''Attorney General''), to Jonathan G. Katz, Secretary, Commission, dated December 17, 1997 (''Attorney General Letter''); Gilbert F. Casellas, Chairman, U.S. Equal Employment Opportunity Commission (''EEOC''), to Secretary, Commission, (''EEOC Letter''); Jeffrey L. Liddle, Liddle & Robinson, L.L.P., to Secretary, Commission, dated January 2, 1998 (''Liddle Letter''); W. Hardy Callcott, Vice President and Deputy General Counsel, Charles Schwab (''Schwab''), to Jonathan G. Katz, Secretary, Commission, dated January 6, 1997 [sic] (''Schwab Letter''); William J. Fitzpatrick, Attorney, to Secretary, Commission, dated January 8, 1997 [sic] (''Fitzpatrick Letter''); Stuart J. Kaswell, Senior Vice President and General Counsel, Securities Industry Association (''SIA''), to Jonathan G. Katz, Secretary, Commission, dated January 13, 1998 (''SIA Letter''); Helen Norton, Director, Equal Opportunity Programs, Women's Legal Defense Fund (''WLDF''), to Jonathan G. Katz, Secretary, Commission, dated January 7, 1998 (''WLDF Letter''); Cliff Palefsky, Chair, Securities Industry Arbitration Committee, National Employment Lawyers Association (''NELA''), to Secretary, Commission, dated January 6, 1998 (''NELA Letter''); and George A. Schieren, Senior Vice President and General Counsel, Merrill Lynch, to Jonathan G. Katz, Secretary, Commission, dated January 16, 1998 (''Merrill Letter'').

[4] Letter from Jean I. Feeney, Attorney, NASD Regulation, to Katherine A. England, Assistant Director, Market Regulation, Commission, dated April 14, 1998. Amendment No 2 amends the language of the proposed rule change in Section 10201(b) of the code to state ''A claim alleging employment discrimination, *including a sexual harassment claim*, [or sexual harassment] in violation of a statute is not required to be arbitrated.'' Amendment No. 2 also amends the effective date of the proposed rule change to January 1, 1999. In addition, Amendment No. 2 responds to the comment letters.

[5] 17 CFR 240.15b7–1. The rule provides as follows:

No registered broker or dealer shall effect any transaction in, or induce the purchase or sale of, any security unless any natural person associated with such broker or dealer who effects or is involved in effecting such transaction is registered or approved in accordance with the standards of training, experience, competence, and other qualification standards (including but not limited to submitting and maintaining all required forms, paying all required fees, and passing any required examinations) established by the rules of any national securities exchange or national securities association of which such broker or dealer is a member or under the rules of the Municipal Securities Rulemaking Board (if it is subject to the rules of that organization).

state regulatory authorities require all applicants for registration as persons associated with a broker/dealer (registered representatives, assistant representatives or principals) to complete and sign the Form U–4, the ''Uniform Application for Securities Industry Registration or Transfer.''[6] Form U–4 requires registered persons to submit to arbitration any claim that is eligible under the rules of the organizations with which they register (as indicated in Item 10 of the Form U–4).[7] thus, the Form U–4 incorporates by reference the rule of the SRO with which the individual is to be registered. NASD Rule 10101 provides as follows:

> The Code of Arbitration Procedure is prescribed * * * for the arbitration of any dispute, claim, or controversy arising out of or in connection with the business of any member of the Association, or arising out of the employment or termination of employment of associated person(s) with any member, with the exception of disputes involving the insurance business of any member which is also an insurance company * * * between or among members and associated persons * * *.

For industry and clearing controversies, Rule 10201 requires that all matters eligible under Rule 10101 be submitted to arbitration at the request of any member or associated person.[8] Rules 10101 and 10201 were amended in 1993 to include the language relating to disputes ''arising out of the employment or termination of employment'' of an associated person.[9] This language was added in order to clarify that employment disputes were required to be arbitrated, since a California court had held that the Code of Arbitration Procedure did not cover such disputes, but only covered disputes arising out of or in connection with business transactions.[10]

Over the past several years, employees have raised several challenges to the mandatory arbitration of employment discrimination disputes. In 1991, the Supreme Court established the framework for considering the issues raised by such challenges in *Gilmer* v. *Interstate/Johnson Lane Corp.*[11] In *Gilmer,* which involved a person registered with the New York Stock Exchange, the Court examined numerous challenges to the adequacy of arbitration procedures raised by the registered representative and found that none was sufficient to prevent the Court from enforcing the representative's agreement, pursuant to his signing of the Form U–4, to arbitrate his federal age discrimination claim. The Court held that Mr. Gilmer had not met his burden of showing that Congress intended to preclude arbitration of claims under the Age Discrimination in Employment Act (''ADEA'') of 1967.[12]

Subsequent to the *Glimer* decision, several courts have declined to find a Constitutional or statutory bar to enforcement of the agreement to arbitrate contained in the Form U–4. Indeed, they have extended the reasoning of *Glimer* to cover disputes arising under Title VII of the Civil Rights Act of 1964,[13] the Americans with Disabilities Act,[14] and state statutes of a similar nature.[15] Courts also have extended the application of *Glimer* to the NASD, since its rules are similar to the NYSE rule at issue *Glimer,*[16] The Commission notes, however, that the U.S. Court of Appeals for the Ninth Circuit, in *Duffield* v. *Robertson Stephens & Co.,* 1998 U.S. App. Lexis 9284 (9th cir. 1998), recently held that Item 10 of Form U–4, incorporating the current mandatory provision of Rule 10101 and 10201, is unenforceable as applied to Title VII claims.

Registered persons and others have continued to question the policy of requiring the arbitration of statutory discrimination claims.[17] In February of 1997, three members of Congress wrote to the SEC and questioned the authority of the NASD and other SROs to require arbitration of statutory discrimination claims in employment disputes through an associated person's signing of the Form U–4.[18] Legislation was introduced that year in both the House and Senate[19] that would prohibit employers and employees from entering into predispute arbitration agreements concerning claims of unlawful employment discrimination.[20]

---

[6] The Form U–4 was adopted effective October 1, 1975.

[7] The relevant language on the Form U–4 states:

> I agree to arbitrate any dispute, claim or controversy that may arise between me and my firm, or a customer, or any other person, that is required to be arbitrated under the rules, constitutions, or by-laws of the organizations indicated in Item 10 as may be amended from time to time and that any arbitration award rendered against me may be entered as a judgment in any court of competent jurisdiction.

From page 4 of the Form U–4 as revised in November 1991. A new version of the Form U–4 was approved by the Commission on July 5, 1996. Securities Exchange Act Release No. 37407 (July 5, 1996), 61 FR 36595 (July 11, 1996). Use of the revised form has been deferred pending related changes to the Central Registration Depository (''CRD''). Securities Exchange Act Release No. 37994 (November 27, 1996), 61 FR 64549 (December 5, 1996). The substance of the quoted language was not changed in the revision.

[8] As one court explained, ''Section 1 [now Rule 10101] defines the general universe of issues that *may* be arbitrated, and Section 8 [now Rule 10201] describes a subset of that universe that *must* be arbitrated under the Code.'' *Armijo* v. *Prudential Ins. Co. of Am.,* 72 F.3d 793, 798 (10th Cir. 1995).

[9] Securities Exchange Act Release No. 32802 (August 25, 1993), 58 FR 45932 (August 31, 1993). In its order approving this change and a related change in the composition of arbitration panels to hear employment disputes, the Commission recognized that claims based on allegations of age, sex, or race discrimination, or relating to sexual harassment, were subject to the arbitration requirement.

[10] *Higgins* v. *Superior Court of Los Angeles County,* No. B057028 (Cal. App. Oct. 8, 1991), *review denied and decision ordered not officially published,* 1 Cal. Rptr. 2d 57 (1992). The state court noted the difference between the NYSE rule (at issue in the Supreme Court's *Gilmer* decision, discussed below), which refers to disputes arising out of the employment or termination of employment of an associated person, and the NASD rule, which at the time did not contain the phrase relating to employment. A federal court reached the same conclusion while the rule change was pending approval. *Farrand* v. *Lutheran Bhd.,* 993 F.2d 1253 (7th Cir. 1993). The Association stated in its rule filing that the amendment was a clarification of existing intent rather than a new policy; some courts accepted this view, while other courts interpreted the rule amendment as a change in policy. See *Kuehner* v. *Dickinson & Company,* 84 F.3d 316, 320 n.1 (9th Cir. 1996) (describing splits in the Seventh, Tenth and Eleventh Circuits on this issue).

[11] 500 U.S. 20 (1991). Those challenges included contentions that anti-discrimination laws are designed to further important social policies that should be addressed in a public forum, that arbitration panels may be biased, that discovery is more limited in arbitration than in court, that arbitrators often do not issue written opinions, that arbitration procedures do not provide for broad equitable relief and class actions, and that there is unequal bargaining power between employers and employees. The Court noted the most of these contentions were generalized attacks on arbitration that had been rejected in prior Supreme Court decisions. *Id.* at 30.

[12] *Id.* at 35. The Court cited its earlier holding that, ''So long as the prospective litigant effectively may vindicate [his or her] statutory cause of action in the arbitral forum, the statute will continue to serve both its remedial and deterrent function.'' 500 U.S. at 28, *quoting Mitsubishi Motors Corp.* v. *Soler Chrysler-Plymouth, Inc.,* 473 U.S. 614, 637 (1985).

[13] *See, e.g., Alford* v. *Dean Witter Reynolds, Inc.,* 939 F.2d 229 (5th Cir. 1991); *Cremin v. Merrill Lynch, Pierce, Fenner & Smith, Inc.,* 957 F. Supp. 1460 (N.D.Ill. 1997). *But see Rosenberg* v. *Merrill Lynch, Pierce, Fenner & Smith, Inc.,* 1998 U.S. Dist. Lexis 877 (D.Mass. 1998).

[14] *See, e.g., Austin* v. *Owens-Brockway Glass Container, Inc.,* 78 F.3d 875, 881 (4th Cir.), *cert. denied,* 117 S. Ct. 432 (1996).

[15] *See, e.g., Kaliden* v. *Shearson Lehman Hutton, Inc.,* 789 F. Supp. 179, 180 (W.D. Pa. 1991).

[16] *See, e.g., Metz* v. *Merril Lynch Pierce, Fenner & Smith, Inc.,* 39 F.3d 1482, 1488 (10th Cir. 1994).

[17] *See, e.g.,* Commission on Future of Worker-Management Relations (''Dunlop Commission''), *Report and Recommendations* 33 n.15 (1994); Equal Employment Opportunity Commission, *Policy Statement on Mandatory Binding Arbitration of Employment Discrimination Disputes as a Condition of Employment* n.2 (1997).

[18] Letter from Representatives Edward J. Markey, Anna G. Eshoo, and Jesse L. Jackson, Jr., to Arthur Levit, Chairman, SEC (February 3, 1997). The Commission's Division of Market Regulation determined that there was no clear answer and suggested that the SROs should address the issue in the first instance.

[19] H.R. 983 and S. 63, 105th Cong. (1997).

[20] Under the proposed legislation, the parties could agree, after a dispute arose, whether to resolve it by arbitration or by court proceedings.

Details of the Proposed Rule Change

Paragraph (a) of the proposed rule adds a prefatory phrase indicating that the requirement to arbitrate employment disputes contains an exception, set forth in paragraph (b).

New paragraph (b) provides that claims alleging employment discrimination, including sexual harassment, in violation of a statute are not required to be arbitrated by NASD rules.[21] This means that such claims may be filed in the appropriate court, if the employee chooses to do so and is not under an enforceable predispute obligation to arbitrate the dispute. An employee also may agree to arbitrate after a dispute arises.[22]

Paragraph (b) applies only to claims alleging employment discrimination, including sexual harassment,[23] in violation of a statute.[24] Paragraph (b) does not apply to causes of action created solely by judicial precedents or to other causes of action under state or federal law, which remain subject to mandatory arbitration under paragraph (a).[25]

Paragraph (c) of the proposed rule is former paragraph (b), which is unchanged except for the renumbering.

Effective Date

The NASD originally requested that the proposed rule become effective one year from the date of Commission approval. However, the NASD is now asking that the proposed rule change become effective on January 1, 1999.[26] NASD Regulation states that the rule change will apply to claims filed on or after the effective date of the rule change.[27] NASD Regulation states that this method is the one most commonly used with regard to changes to the Code and is the most efficient to administer.

III. Summary of Comments

The Commission received nine comment letters on the proposed rule change. Six commenters supported the proposed rule change, with recommended modifications. Three commenters opposed the proposed rule change.[28] The comment letters focused on three main issues: (1) whether the rule will lead to the bifurcation of claims in arbitration and in court; (2) whether the one-year delayed effective date was appropriate; and (3) whether the rule should be amended to permit only post-dispute agreements to arbitrate. NASD Regulation responded to the comment letters.[29]

Overview of the Proposed Rule Change

Many of those who support the proposed rule change do so because they believe employment discrimination claims do not belong in arbitration. The EEOC, for example, applauded the proposal as a ''first step'' toward bringing the securities industry into harmony with the intent of federal anti-discrimination statutes. The WLDF asserted that it will help protect important civil rights. NELA argued that the NASD does not have the jurisdiction to compel the waiver of fundamental statutory rights and remedies as a condition of employment, and that statutory claims of this sort do not belong in the present arbitration system. The New York Attorney General supported the proposed rule change, maintaining that industry arbitrators lack training and experience relating to interpreting and applying employment discrimination law.

One commenter opposed the proposed rule change, contending that it is against public policy, is contrary to case law and federal legislation encouraging the use of arbitration, ignores the concerns of courts,[30] and undermines a long history of a system of SRO arbitration of employment matters without any empirical evidence of a problem.[31] Similarly, Schwab stated that although it is willing to resolve statutory discrimination claims in court, because arbitration is the preferable forum, it does not support the proposed rule change in its current form. In Schwab's view, arbitration is fundamentally fair as a dispute resolution process and the NASD should address any concerns by working to improve the process, not by removing some classes of cases from the process.[32] On the other hand, one commenter opposed the proposed rule change as not going far enough. He maintained that the Commission should prohibit arbitration of all employment claims in any instance.[33]

NASD Regulation responded that its arbitration forum is fair and that it provides many benefits to employees as well as to members, and that the proposed rule change does not in any way indicate a lack of confidence in the current arbitration system.

Comments Concerning Bifurcation of Claims

Several letters voiced concerns that, as presently drafted, the rule presents the possibility that claimants will be required to pursue different claims in different forums. A number of commenters asserted that the proposal should be expanded to cover all common law claims concerning employment-related matters,[34] such as wrongful termination, defamation, negligent supervision, invasion of privacy, tortious interference with economic opportunity, and intentional infliction of emotional distress.[35] Those commenters argued that since the proposed rule change allows the statutory discrimination claims to be brought in court, while requiring employees to bring the common law and all other statutory claims in arbitration, it will result in the separation of claims that are often joined together and based

[21] *See* Amendment No. 2, *supra* note 4.

[22] A report by the NASD's Arbitration Policy Task Force (''Task Force Report'') observed that arbitration of employment-related disputes offers advantages in terms of speed and cost, and that arbitration's essentially equitable approach to dispute resolution is fully capable of vindicating the important public rights expressed in anti-discrimination statutes. Task Force Report at 119. Therefore, the NASD expects that many employees will continue to file their discrimination claims in arbitration if the proposed rule becomes effective, and the NASD states that it intends to make further enhancements to its arbitration forum to make it even more attractive to parties. Firms and their employees who agree to arbitrate discrimination claims may agree to use any arbitration forum.

[23] Sexual harassment has been held to be a form of sex discrimination, and thus a violation of Title VII. *Meritor Savings Bank* v. *Vinson*, 477 U.S. 57, 64 (1986).

[24] The NASD intends the term ''statute'' to be interpreted broadly, as defined in *Black's Law Dictionary* 1410 (6th Ed. 1990): ''A formal written enactment of a legislative body, whether federal, state, city, or county.''

[25] Such judicially created causes of action might include, for example, claims alleging ''wrongful discharge'' without any accompanying claim of discrimination on account of age, sex, race, or other status protected by a specific law.

[26] *See* Amendment No. 2, *supra* note 4.

[27] Accordingly, under the proposal, on January 1, 1999, claims may be filed in court for past conduct if they are within the applicable statutes of limitation and other statutory requirements and no other predispute arbitration agreements apply.

[28] Liddle Letter; Fitzpatrick Letter; Schwab Letter.

[29] *See* Amendment No. 2, *supra* note 4.

[30] Fitzpatrick Letter.

[31] *Id.* the SIA also noted that critics of the arbitration process have not offered any empirical data to support a claim that SRO arbitration is not a fair forum for employees to resolve statutory employment discrimination claims and employees actually do better in arbitration than in overcrowded court systems.

[32] Schwab noted that the NASD did state its intent to provide increased training in employment related issues to arbitrators and to assign arbitrators based on their subject-matter expertise.

[33] Liddle Letter. He stated that the decision to exclude statutory employment claims from mandatory arbitration reflects the NASD's view that its arbitration process is not suited to handle resolution of these claims because it is fundamentally unfair and does not afford a claimant with an employment claim a full and fair opportunity to vindicate his or her rights.

[34] Attorney General Letter; Liddle Letter. Another commenter stated that the proposed rule change should be expanded to cover all statutory employment rights, including those under ERISA, the Family and Medical Leave Act, and other laws. WLDF Letter.

[35] Attorney General Letter.

on the same alleged facts.[36] In their view, such bifurcation of the statutory and common law claims could create a financial burden on employees [37] and members or member firms,[38] delay the resolution of claims,[39] and cause scheduling and discovery disputes.[40] Several commenters also voiced concerns about the possible res judicata or collateral estoppel effects of the arbitration on the court proceeding.[41]

NASD Regulation responded that the proposed rule change is an exception to a long-standing rule requiring the arbitration of disputes between members and associated persons and that the interest groups who expressed their concerns focused on federal anti-discrimination legislation, not on common law claims or other federal laws. In addition, NASD Regulation stated it will continue to observe developments in this area (as will the Commission).

Comments Concerning the Effective Date

Several commenters recommended that the proposal become effective earlier than one year after Commission approval.[42] Several commenters suggested immediate effectiveness,[43] while one suggested effectiveness three months after Commission approval.[44] The EEOC was of the view that the rule should be effective immediately upon Commission approval because securities industry employees should not be locked into an agreement that conflicts with the principles underlying the anti-discrimination laws. The EEOC was not persuaded otherwise by the NASD's justification that a one-year delay will allow it to improve its arbitral forum [45] and stated that the NASD can still pursue those steps notwithstanding an immediate effective date. The EEOC stated that existing deficiencies in the arbitral process militate against delaying the effective date. The EEOC was concerned that the year delay will allow firms time to implement their own mandatory arbitration agreements to replace the requirement eliminated by the NASD. Similarly, NELA's view is that the real purpose of the waiting period is to allow member firms time to implement their own mandatory arbitration requirements in employee contracts in order to circumvent the positive benefits of the rule change. The WLDF objected to the one-year waiting period because it argued that victims of sexual harassment and other forms of illegal discrimination will continue to be denied important safeguards, while NELA opposed the one year waiting period as being inconsistent with the purpose and spirit of the proposal and stated it would be unconscionable to keep in place for a year a system that is ''admittedly inadequate'' for the resolution of statutory discrimination claims.

On the other hand, the SIA and Merrill Lynch supported the one-year phase in period.[46] The SIA stated that employees and firms need time to consider what agreements they may wish to enter into with each other and that firms need time to consider and implement the changes. The SIA also noted that the NASD intends to use the year to enhance the quality of its arbitration programs, to increase the level of confidence that employees have in the fairness of the NASD arbitration forum, and to work with other regulators to consider whether other change sin the industry registration process are warranted. The SIA argued that the proposal does not need to be implemented immediately to protect employee rights because (1) the Supreme Court has stated that parties who agree to arbitrate their claims do not forgo any substantive statutory rights, and (2) it is not true that arbitration is improper and unfair to employees. Similarly, Merrill Lynch supported a one-year waiting period because, in its view, arbitration is not unfair, as found by the Supreme Court in *Gilmer*, and employees fare better in SRO arbitration than in court. Merrill Lynch stated that because the proposed rule change represents a significant change in industry practice, other SROs (who have not followed the NASD's lead in this area) and the industry need time to resolve the issues created by the new rule.[47]

NASD Regulation responded that the publicity that has surrounded the proposed rule has always included the fact that the rule would take effect one year after Commission approval, so firms and employees have not been on notice that they should act more quickly. NASD Regulation also stated that making the rule change effective shortly after Commission approval would be problematic because other SROs that require arbitration of employee/employer disputes may wish to amend their rules to be consistent with the NASD and this process could take several months. Nonetheless, the NASD stated that it understands the desirability of a definitive effective date and moved the effective date to January 1, 1999. In the view of NASD Regulation, this date gives other SROs, members and employees sufficient time to take action to respond to the rule.

With regard to the significance of the effective date, NASD Regulation stated that the rule change will apply to claims filed on or after the effective date of the rule change. NASD Regulation asserted that this method is the one most commonly used with regard to changes to the Code and is the most efficient to administer, as it does not involve subsidiary determinations as to the dates of other transactions.

Comments Concerning Voluntary Post-Dispute Agreements

Several commenters argue that pre-dispute agreements to arbitrate should not be allowed because they are never truly voluntary,[48] because of the

[36] Attorney General Letter; Liddle Letter; Schwab Letter; Fitzpatrick Letter.

[37] Liddle Letter.

[38] Schwab Letter. Schwab noted that the court case and arbitration case might occur in different states, requiring different lawyers and further increasing the costs of final resolution.

[39] Attorney General Letter; Liddle Letter; Schwab Letter.

[40] Schwab Letter. In addition, Schwab observed that parties may file pretextual claims in court to gain the advantage of more liberal discovery in court than in arbitration, or that multiple proceedings may result in orders that conflict with one another. Schwab argued that, because it is more likely that arbitrations and investigations will now occur at the same time because the arbitration necessarily will not resolve the discrimination claims, the proposal creates the potential for conflict between investigations by the EEOC or comparable state or local agencies, and arbitrations. Schwab also maintained that parties to arbitration would then subpoena the investigatory files and submit the information to the arbitration panel, who are likely to misunderstand the information in those files, which may be gathered without due process or significant input from the parties involved. Schwab suggested that EEOC and comparable state investigative files should not be subject to discovery or admissible as evidence in arbitration.

[41] Liddle Letter; Schwab Letter.

[42] Attorney General Letter; EEOC Letter; WLDF Letter; NELA Letter.

[43] EEOC Letter; WLDF Letter; NELA Letter.

[44] Attorney General Letter.

[45] The NASD stated that it intended to improve the arbitration process to ensure procedural adequacy and to safeguard employee rights, including providing for greater disclosure to employees of the effect of signing the Form U–4, the features of arbitration, and their rights under the proposed rule.

[46] Fitzpatrick, who oppose the proposed rule change, nevertheless supported the one-year period in the event the Commission approves the proposed rule change.

[47] Schwab requested that the NASD and the Commission clarify precisely how the one-year effective date is intended to operate. Schwab questioned whether the proposed rule change will apply to any court case filed more than a year form the approval of the proposal (which could encourage people to wait to file a case), or whether it will apply only to employees who sign the Form U–4 after one year has passed (which would result in different employees having different rights in incidents occurring at the same time).

[48] Attorney General Letter; EEOC Letter. The Attorney General further stated that opposition to pre-dispute arbitration agreements is widespread, including some members of Congress, the EEOC, and the Commission on the Future of Worker-

unequal bargaining power of employers and employees,[49] and because they are contrary to the fundamental principles reflected in this nation's anti-discrimination laws.[50] These commenters argued that the Commission should only allow agreements that are truly voluntary and that are entered into after a dispute has arisen.[51] In addition, one commenter supported voluntary post-dispute agreements to arbitrate employment disputes only to the extent that such agreements preserve the substantive protections and remedies afforded by statute, and argued that the NASD should amend its proposal to include such protections.[52]

The NASD Regulation stated it considered the above issues and does not take a position on the desirability of private arbitration agreements between members and their employees, but instead simply determined to remove from its rules the mandatory requirement as to claims of statutory employment discrimination.

IV. Discussion

Under the Act, SROs, like the NASD, are assigned rulemaking and enforcement responsibilities to perform their role in regulating the securities industry for the protection of investors and other related purposes. Pursuant to Section 19(b)(2) of the Act, the Commission is required to approve a rule change of an SRO like the NASD if it determines that the proposal is consistent with applicable statutory standards.[53] These standards include Section 15A(b)(6) of the Act, which provides that the NASD's rules must be designed to, among other things, ''promote just and equitable principles of trade;'' and ''protect investors and the public interest.'' Section 15A(b)(6) also provides that the NASD's rules may not be designed to ''regulate * * * matters not related to the purposes of the [Exchange Act] or the administration of the [NASD].''

By changing its rule, the NASD will no longer require associated persons, solely by virtue of their association or registration with the NASD, to arbitrate claims of statutory employment discrimination. NASD's proposal is consistent with the applicable statutory standards.[54] The statutory employment anti-discrimination provisions reflect an express intention by legislators that employees receive special protection from discriminatory conduct by employers. Such statutory rights are an important part of this country's efforts to prevent discrimination. It is reasonable for the NASD to determine that in this unique area, it will not, as a self-regulatory organization, require arbitration.

With respect to the bifurcation issue raised by the commenters, the Supreme Court, in *Dean Witter Reynolds, Inc.* v. *Byrd*, 470 U.S. 213, 217 (1985), acknowledge the appropriateness of bifurcation between federal statutory and pendant state law claims.

With respect to the issue raised by commenters of whether the rule should be effective immediately or have a delayed effective date, notwithstanding this rule change by the NASD, other SROs continue to have rules that will require employees of their members to arbitrate statutory discrimination claims. The NASD's decision to move the effective date from one year after approval of the proposed rule change to January 1, 1999 is a reasonable compromise. The January 1, 1999 date will permit other SROs to change their rules as the NASD has done, so that employees of member firms of other SROs will not be required to arbitrate these claims.

With respect to other comments that suggested that the NASD should enact other rules concerning employer/employee arbitration agreements or extend this rule to other causes of action, these issues are left to the NASD to consider in the first instance.

In approving this rule, the Commission notes that it has considered the proposed rule's effects upon efficiency, competition, and capital formation.[55]

Amendment No. 2 is a technical amendment; it changes the rule language to clarify that sexual harassment is a form of sex discrimination prohibited under Title VII (as well as certain state statutes). This change will make it clear to the securities industry that sexual harassment claims are encompassed within the term ''employment discrimination'' claims. In addition, as discussed more fully above, Amendment No. 2 also amends the effective date of the proposal to an earlier date, while at the same time still allowing enough time for members and member firms to consider and implement the changes.[56]

V. Conclusion

It is therefore ordered, pursuant to Section 19(b)(2) of the Act,[57] that the proposed rule change, as amended, (SR–NASD–97–77) is approved.

For the Commission, by the Division of Market Regulation, pursuant to delegated authority.[58]

Margaret H. McFarland,

Deputy Secretary.

[FR Doc. 98–17150 Filed 6–26–98; 8:45 am]

BILLING CODE 8010–01–M

Management Relations (''Dunlop Commission''). Legislation was introduced in the House and the Senate that would prohibit parties from entering into agreements to resolve employment discrimination claims unless they voluntarily enter into them after such claims arise.

[49] Attorney General Letter.

[50] EEOC Letter.

[51] Attorney General Letter; EEOC Letter; Liddle Letter.

[52] Attorney General Letter. NASD Regulation responded that the content of private arbitration agreements is not germane to the proposed rule change, which simply removes the arbitration requirement imposed through the signing of the Form U–4 from the NASD's rules.

[53] the Commission oversees the arbitration programs of the SROs, like the NASD, through inspections of the SRO facilities and the review of SRO arbitration rules. Inspections are conducted to identify areas where procedures should be strengthened, and to encourage remedial steps either through changes in administration or through the development of rule changes.

[54] 15 U.S.C. 78*o*–3(b)(6).

[55] 15 U.S.C. 78c(f).

[56] Because Amendment No. 2 is technical in nature, it is not subject to a notice and comment requirement.

[57] 15 U.S.C. 78s(b)(2).

[58] 17 CFR 200.30–3(a)(12).

SECURITIES AND EXCHANGE COMMISSION

[Release No. 34–40108; File No. SR–PCX–98–14]

Self-Regulatory Organizations; Notice of Filing and Order Granting Accelerated Approval to Amendment No. 2 To Extend the Supervisory Specialist Pilot Program

June 22, 1998.

I. Background

On March 3, 1998, the Pacific Exchange, Inc. (''PCX'' or ''Exchange'') filed with the Securities and Exchange Commission (''Commission'' or ''SEC'') a proposed rule change pursuant to Section 19(b)(2) of the Securities Exchange Act of 1934 (''Act''),[1] and Rule 19b–4 thereunder,[2] to establish a temporary, 90-day, Supervisory Specialist Pilot Program (''Program'').[3]

[1] 15 U.S.C. 78s(b)(1).

[2] 17 CFR 240.19b–4.

[3] Also on March 3, 1998, the PCX filed proposed rule change SR–PCX–98–13 (''Companion filing''), requesting the Commission to approve a one-year pilot of the Program. *See* Securities Exchange Act Release No. 39825 (April 1, 1998), 63 FR 17250. The Companion filing originally was to become effective at the expiration of the temporary, 90-day Program. On March 12, 1998 the PCX filed Amendment No. 1 to the proposed rule change. *See* Letter from Michael D. Pierson, Senior Attorney, Regulatory Policy, PCX, to Marc McKayle, Attorney, Division of Market Regulation (''Division''), Commission

Continued

The proposed rule change was published for comment in the **Federal Register** on March 31, 1998.[4] Under the Program, eligible PCX specialist firms may operate two specialist posts, on the PCX Equities Floors only, based upon one Exchange membership. On June 18, 1998, the PCX filed Amendment No. 2, proposing to extend the 90-day pilot, due to expire on June 22, 1998, for an additional 90 days to give PCX an adequate opportunity to respond to concerns regarding the filing raised in comment letters, and to prevent the disruption of specialist firms already operating under the Program.[5] For the reasons discussed below, the Commission is approving the proposed rule change on an accelerated basis.

II. Proposed Rule Change

In an effort to streamline the way business is conducted on the Exchange's Equities Floors, and to provide Exchange specialist firms with greater control over the management and costs of their operations, the Exchange proposed to adopt the Supervisory Specialist Pilot Program. Under the Program, a specialist firm may operate two specialist posts based upon one Exchange membership, provided that both posts will be staffed by Specialists who have been qualified by the Exchange as Registered Specialists under the rules of the Exchange. The Program permits one specialist post to be staffed by a Member who is registered as the supervising specialist (''Supervisory Specialist''), while the other post is staffed by an Associated Person of the specialist firm who is otherwise qualified to act as a Registered Specialist (the ''Associate Specialist''). Under the Program, the Supervisory Specialist acts as supervising specialist over the Associate Specialist. Program participants are restricted to Exchange Members with seats on the Equity floor, and no more than two specialist posts may be operated per membership.

III. Comments

The Commission has received three comment letters on the proposal. One comment letter supports the Exchange's rationale for the Program.[6] The others oppose the Program. The two opposing letters claim that the Program will dilute the value of Exchange seats as an investment property.[7] Furthermore, the dissenters argue that such a change to the Exchange's seat operations requires approval by a majority vote of the PCX Membership, as well as the PCX Board of Directors, pursuant to the Article V, Section 1 of the PCX Constitution.

IV. Solicitation of Comments

Interested persons are invited to submit written data, views and arguments concerning the foregoing, including whether the proposed rule change is consistent with the Act. In particular, the Commission seeks comment on whether the proposal is consistent with the PCX Constitution. Persons making written submissions should file six copies thereof with the Secretary, Securities and Exchange Commission, 450 Fifth Street, N.W., Washington, D.C. 20549. Copies of the submission, all subsequent amendments, all written statements with respect to the proposed rule change that are filed with Commission, and all written communications relating to the proposed rule change between the Commission and any person, other than those that may be withheld from the public in accordance with the provisions of 5 U.S.C. § 552, will be available for inspection and copying in the Commission's Public Reference Room, 450 Fifth Street, N.W., Washington, D.C. 20549. Copies of such filing will also be available for inspection and copying at the principal office of the PCX. All submissions should refer to File No. SR–PCX–98–14 and should be submitted by July 20, 1998.

V. Commission Findings and Order Granting Accelerated Approval of Proposed Rule Change

After careful review, the Commission finds that the proposed rule change is consistent with the Act and the rules and regulations thereunder applicable to a national securities exchange. In particular, the Commission believes the proposal is consistent with the Exchange Act Section 6(b)(5)[8] requirements that the rules of an exchange be designed to promote just and equitable principles of trade, to prevent fraudulent and manipulative acts, and, in general, to protest investors and the public. In originally approving the program for a 90-day pilot, the Commission preliminarily found that the Program could enhance liquidity in equity securities traded on the Exchange members by given specialist firms the opportunity to become specialists in more stock without incurring additional membership costs. Since then the Commission has received comment letters expressing concerns with certain aspects of the Program. By approving the Program for a further limited period of time, but without extending it to additional firms, the Commission will prevent disruption to the firms already enrolled in the Program while enabling the Commission to determine whether its preliminary determinations remain correct in light of the comment letters. Approval of the 90-day extension has no bearing on, and should not be interpreted to suggest that the Commission ultimately will approve PCX's Companion filing (SR–PCX–98–13),[9] requesting approval of the pilot for one year.

The Commission finds good cause for approving the proposed rule change prior to the thirtieth day after the date of publication of notice thereof in the **Federal Register**. First, the Commission notes that the extension is only for 90 days. Second, the approval of the 90-day extension is granted on the condition that the PCX will not enlist any additional specialist firms to the Program during this period. As a result, the extension will merely preserve the status quo to give the PCX additional time to respond to the comment letters and to give the Commission time to consider that response.

VI. Conclusion

It is therefore ordered, pursuant to Section 19(b)(2) of the Act,[10] that the proposed rule change (SR–PCX–98–14) is hereby approved on an accelerated basis through September 21, 1998.

For the Commission, by the Division of Market Regulation, pursuant to delegated authority.[11]

Margaret H. McFarland,

Deputy Secretary.

[FR Doc. 98–17233 Filed 6–26–98; 8:45 am]

BILLING CODE 8010–01–M

(''Amendment No. 1''). In Amendment No. 1, the PCX provided a basis for the accelerated effectiveness of the proposal pursuant to Section 19(b)(2) of the Act, explaining that the Program was designed to permit specialist firms greater control over the impact of sharply escalating seat prices, while preserving the quality of the Exchange's markets and services to the public and its members.

[4] Securities Exchange Act Release No. 39784 (March 24, 1998), 63 FR 15472.

[5] *See* letter from Michael D. Pierson, Senior Attorney, Regulatory Policy, PCX, to Richard Strasser, Assistant Director, Division, Commission (June 18, 1998) (''Amendment No. 2'').

[6] *See* letter from Daniel H. Turner, President, Rubicon Securities, Inc. to Jonathan G. Katz, Secretary, Office of the Secretary, Commission (May 12, 1998).

[7] *See* letters from Matthew D. Wayne, Counsel to PBL, Inc., Vanasco & Wayne, to Jonathan G. Katz, Secretary, Office of the Secretary, Commission (April 14, 1998), and John A. Brown, Chairman (retired), M.J.T. Securities, Inc., to Jonathan G. Katz, Secretary, Office of the Secretary, Commission (June 2, 1998).

[8] U.S.C. 78f(b)(5).

[9] Securities Exchange Act Release No. 39825 (April 1, 1998) 63 FR 17250.

[10] 15 U.S.C. 78s(b)(2).

[11] CFR 200.30–3(a)(12).

DEPARTMENT OF STATE

[Public Notice 2844]

Privacy Act of 1974; Altered System of Records

Notice is hereby given that the Department of State proposes to alter an existing system of records, STATE–42, pursuant to the provisions of the Privacy Act of 1974, as amended (5 U.S.C. 552a(r)), and the Office of Management and Budget Circular No. A–130, Appendix I. The Department's report was filed with the Office of Management and Budget on June 18, 1998.

It is proposed that the system description will include revisions and/or additions to each section except the sections entitled ''System name,'' ''Retrievability'' and ''Systems exempted from certain provisions of the Act.'' A new section entitled ''Security classification'' has also been added. The changes to the existing system description are proposed to reflect more accurately the Bureau of Political-Military Affairs' record-keeping practices, the enlargement of the scope of its mandate, and a reorganization of its activities and operations.

Any persons interested in commenting on the altered system of records may do so by submitting comments in writing to Kenneth F. Rossman, Acting Chief; Programs and Policies Division; Office of IRM Programs and Services; Room 1239; Department of State; 2201 C Street, NW; Washington, DC 20520–1512.

This system of records will be effective 40 days from the date of publication unless we receive comments which will result in a contrary determination.

The altered system, the ''Munitions Control Records, STATE–42'' will read as set forth below.

Dated: June 18, 1998.

Patrick R. Hayes,

Acting Assistant Secretary for the Bureau of Administration.

STATE–42

SYSTEM NAME:

Munitions Control Records.

SECURITY CLASSIFICATION:

Unclassified and classified.

SYSTEM LOCATION.

Department of State, Annex 6; Room 200; 1700 Lynn St.; Arlington, VA 22209.

CATEGORIES OF INDIVIDUALS COVERED BY THE SYSTEM:

Exporters of defense articles and defense services with or without Department of State authorization; individuals who are applicants for export licenses; individuals who are registered as exporters; and individuals who are brokers for sales of defense articles or defense services who completed registration statements or submitted requests for approval of a brokering activity.

AUTHORITY FOR MAINTENANCE OF THE SYSTEM:

22 U.S.C. 2651A (Organization of the Department of State); 22 U.S.C. 3921 (Management of service); 5 U.S.C. 301 (Management of the Department of State); 22 U.S.C. 2778 (Arms Export Control Act).

CATEGORIES OF RECORDS IN THE SYSTEM:

Correspondence, registration statements when a principal executive officer or owner is the same as the applicant, and checks for registration fees sent to the Department of State (Department) when an individual registers as a manufacturer, exporter and/or broker of defense articles or defense services; copies of letters to individuals and businesses from the Department pertaining to their registration; Proposed Charging Letters and Orders and Consent Agreements pertaining to the Department's administrative cases; correspondence, memoranda, federal court documents, telegrams, other government agency reports, and E–Mail messages between the Department and other federal agencies regarding law enforcement and intelligence information about defense trade activities pertaining to the subject of the record.

ROUTINE USES OF RECORDS MAINTAINED IN THE SYSTEM, INCLUDING CATEGORIES OF USERS AND PURPOSE OF SUCH USES:

The information in this system is used primarily by the Office of Defense Trade Controls when making determinations regarding:

(a) Individuals who have been authorized to export or retransfer a defense article, defense service or related technical data;

(b) Which commodities, quantities, and dollar values were authorized for export and the extent of any export violations;

(c) Administrative charges imposed on an individual for violating the export regulations; and

(d) The removal of export privileges.

The information may also be used to send required reports to Congress about certain defense trade transactions. The principal users of this information outside the Department of State are the U.S. Customs Service and the Department of Justice for their investigations of violations of the Arms Export Control Act. This information may also be released to other federal intelligence and law enforcement agencies pursuant to statutory intelligence and law enforcement responsibilities or for other lawful purposes.

POLICIES AND PRACTICES FOR STORING, RETRIEVING, ACCESSING, RETAINING AND DISPOSING OF RECORDS IN THE SYSTEM:

STORAGE:

Electronic media, hard copy.

RETRIEVABILITY:

Individual name.

SAFEGUARDS:

All employees of the Department of State have undergone a thorough background security investigation. Access to the Department and its annexes is controlled by security guards and admission is limited to those individuals possessing a valid identification card or individuals under proper escort. Access to Annex 6 has security access controls (code entrances) and/or security alarm systems. All records containing personal information are maintained in secured file cabinets or in restricted areas, access to which is limited to authorized personnel. Access to computerized files is password-protected and under the direct supervision of the system manager. The system manager has the capability of printing audit trails of access from the computer media, thereby permitting regular and *ad hoc* monitoring of computer usage.

RETENTION AND DISPOSAL:

These records will be maintained until they become inactive, at which time they will be destroyed or retired to the Federal Records Center according to published records schedules of the Department of State and as approved by the National Archives and Records Administration. Licenses and license applications will be destroyed after fifteen years. More specific information may be obtained by writing to the Director; Office of IRM Programs and Services; Room 1239; Department of State; 2201 C Street, NW; Washington, DC 20520–1512.

SYSTEM MANAGER(S) AND ADDRESS:

Director, Office of Defense Trade Controls, Bureau of Political-Military Affairs, SA–6, Room 200, Department of State, Washington, DC 20522–0602.

NOTIFICATION PROCEDURE:

Individuals who have reason to believe that the Bureau of Political-Military Affairs (Office of defense Trade Controls) might have information pertaining to themselves should write to the Director; Office of IRM Programs and Services; Room 1239; Department of State; 2201 C Street, NW; Washington, DC 20520–1512. The individual must specify that he/she wishes the Office of Defense Trade Controls to be checked. At minimum, the individual must include: name; date and place of birth; current mailing address and zip code; signature; and a brief description of the circumstances which may have caused the creation of the record including the approximate dates of the circumstances which give the individual cause to believe that the Office of Defense Trade Controls may have records pertaining to him/her.

RECORD ACCESS AND AMENDMENT PROCEDURES:

Individuals who wish to gain access to or amend records pertaining to themselves should write to the Director; Office of IRM Programs and Services (address above).

RECORD SOURCE CATEGORIES:

These records contain information obtained from the individual, from the organization the individual represents and intelligence and law enforcement agencies.

SYSTEMS EXEMPTED FROM CERTAIN PROVISIONS OF THE ACT:

Portions of certain records contained within this system of records are exempted from 5 U.S.C. 552a (c)(3), (d), (e)(1), (3)(4)(G), (H) and (I), and (f). See Department of States rules published in the **Federal Register**.

[FR Doc. 98–17228 Filed 6–26–98; 8:45 am]

BILLING CODE 4710–05–M

DEPARTMENT OF TRANSPORTATION

Notice of Applications for Certificates of Public Convenience and Necessity and Foreign Air Carrier Permits Filed Under Subpart Q During the Week Ending June 19, 1998

The following Applications for Certificates of Public Convenience and Necessity and Foreign Air Carrier Permits were filed under Subpart Q of the Department of Transportation's Procedural Regulations (See 14 CFR 302.1701 et seq.). The due date for Answers, Conforming Applications, or Motions to Modify Scope are set forth below for each application. Following the Answer period DOT may process the application by expedited procedures. Such procedures may consist of the adoption of a show-cause order, a tentative order, or in appropriate cases a final order without further proceedings.

Docket Number: OST–98–3964.

Date Filed: June 17, 1998.

Due Date for Answers, Conforming Applications, or Motions to Modify Scope: July 15, 1998.

Description: Application of American Airlines, Inc. pursuant to 49 U.S.C. Section 41102, and Subpart Q of the Department's Regulations, applies for renewal of segment 1 of its Certificate of Public Convenience and Necessity for Route 648 (Raleigh/Durham-London), issued by Order 93–12–27, December 17, 1994.

Dorothy W. Walker,

Federal Register Liaison.

[FR Doc. 98–17255 Filed 6–26–98; 8:45 am]

BILLING CODE 4910–62–P

DEPARTMENT OF TRANSPORTATION

Aviation Proceedings, Agreements Filed During the Week Ending June 19, 1998

The following Agreements were filed with the Department of Transportation under the provisions of 49 U.S.C. Sections 412 and 414. Answers may be filed within 21 days of date of filing.

Docket Number: OST–98–3959.

Date Filed: June 15, 1998.

Parties: Members of the International Air Transport Association.

Subject: 14PTC3 Telex Mail Vote 944 Korea-Russia fares

Intended effective date: June 18, 1998.

Dorothy W. Walker,

Federal Register Liaison.

[FR Doc. 98–17254 Filed 6–26–98; 8:45 am]

BILLING CODE 4910–62–P

DEPARTMENT OF TRANSPORTATION

Federal Aviation Administration

Executive Committee of the Aviation Rulemaking Advisory Committee; Meetings

AGENCY: Federal Aviation Administration (FAA), DOT.

ACTION: Notice of change in time and location of meetings.

SUMMARY: The FAA is issuing this notice to advise the public of a change in time and location for two special meetings of the Executive Committee of the Federal Aviation Administration Aviation Rulemaking Advisory Committee (63 FR 8515, February 19, 1998).

DATES: The July 15, 1998, meeting will begin at 3 p.m.; the July 21, 1998, meeting will begin at 10 a.m.

ADDRESSES: The July 15, 1998, meeting will be held at the Embassy Suites, 1250 22nd Street, NW., Washington, DC. The July 21, 1998, meeting will be held at the U.S. Department of Transportation, 400 Seventh Street, SW., Room 6200–6204, Washington, DC.

FOR FURTHER INFORMATION CONTACT: Miss Jean Casciano, Federal Aviation Administration, 800 Independence Avenue, SW., Washington, DC 20591, telephone (202) 267–9683; fax (202) 267–5075; e-mail Jean.Casciano@faa.dot.gov.

SUPPLEMENTARY INFORMATION: Pursuant to section 10(a)(2) of the Federal Advisory Committee Act (Pub. L. 92–463; 5 U.S.C. App. II), notice is hereby given of two special meetings of the Executive Committee to be held on July 15, 1998, at the Embassy Suites, 1250 22nd Street, NW., Washington, DC, and on July 21, 1998, at the U.S. Department of Transportation, 400 Seventh Street, SW., Room 6200–6204, Washington, DC.

The agenda for the July 15, 1998, meeting will include a detailed review of the draft report of the Fuel Tank Harmonization working Group.

The agenda for the July 21, 1998, meeting will include a further review of and vote on the report of the Fuel Tank Harmonization working Group.

Attendance is open to the interested public but will be limited to the space available. The public must make arrangements by July 6, 1998, to present oral statements at the meeting. The public may present written statements to the executive committee at any time by providing 25 copies to the Executive Director, or by bringing the copies to him at the meeting.

Sign and oral interpretation can be made available at the meeting, as well as an assistive listening device, if requested 10 calendar days before the meeting. Arrangements may be made by contacting the person listed under the heading **FOR FURTHER INFORMATION CONTACT.** A copy of the draft report of the Fuel Tank Harmonization Working Group will be available at each meeting or may be obtained following the meeting by contacting the above person.

Issued in Washington, DC, on June 23, 1998.

Joseph A. Hawkins,

Executive Director, Aviation Rulemaking Advisory Committee.

[FR Doc. 98–17225 Filed 6–26–98; 8:45 am]

BILLING CODE 4910–13–M

DEPARTMENT OF TRANSPORTATION

Federal Aviation Administration

Aviation Rulemaking Advisory Committee Meeting on Noise Certification Issues

AGENCY: Federal Aviation Administration (FAA), DOT.

ACTION: Notice of meeting.

SUMMARY: The FAA is issuing this notice to advise the public of a meeting of the Federal Aviation Administration Aviation Rulemaking Advisory Committee to discuss noise certification issues.

DATES: The meeting will be held on July 15 at 1:00 p.m.

ADDRESSES: The meeting will be held at the General Aviation Manufacturers Association, 1400 K Street NW, Washington, DC.

FOR FURTHER INFORMATION CONTACT: Ms. Angela O. Anderson, (202) 267–9681, Office of Rulemaking (ARM–200), 800 Independence Avenue, SW, Washington, DC 20591.

SUPPLEMENTARY INFORMATION: Pursuant to section 10(a)(2) of the Federal Advisory Committee Act (Pub. L. 92–463; 5 U.S.C. App. II), notice is hereby given of a meeting of the Aviation Rulemaking Advisory Committee (ARAC) to discuss noise certification issues. This meeting will be held July 15, 1998, at 1:00 p.m., at the General Aviation Manufacturers Association. The agenda for this meeting will include progress reports from the FAR/JAR Harmonization Working Group for Helicopters and the FAR/JAR Harmonization Working Group for Subsonic Transport Airplanes. It will also include the presentation and vote on the NPRM from the FAR/JAR Harmonization Working Group for Propeller-Driven Small Airplanes. Members of the public may obtain copies of this NPRM by contacting the person listed above under **FOR FURTHER INFORMATION CONTACT**.

Attendance is open to the interested public but may be limited to the space available. The public must make arrangements in advance to present oral statements at the meeting or may present statements to the committee at any time. In addition, sign and oral interpretation can be made available at the meeting, as well as an assistive listening device, if requested 10 calendar days before the meeting. Arrangements may be made by contacting the person listed under the heading **FOR FURTHER INFORMATION CONTACT**.

Issued in Washington, DC, on June 23, 1996.

Paul Dykeman,

Assistant Executive Director for Noise Certification Issues, Aviation Rulemaking Advisory Committee.

[FR Doc. 98–17226 Filed 6–26–98; 8:45 am]

BILLING CODE 4910–13–M

DEPARTMENT OF TRANSPORTATION

Surface Transportation Board

[STB Docket No. AB–551X]

Knox & Kane Railroad Company—Abandonment Exemption—in Clarion County, PA

Knox & Kane Railroad Company (Knox) has filed a notice of exemption under 49 CFR 1152 Subpart F—*Exempt Abandonments* to abandon an approximately 9-mile line of its railroad between Station #3069 + 49, immediately west of milepost 86, and Station #3533 + 70, immediately west of milepost 95, in Clarion County, PA. The line traverses United States Postal Service Zip Codes 16232 and 16254.

Knox has certified that: (1) no local traffic has moved over the line for at least 2 years; (2) there is no overhead traffic moving over the line; (3) no formal complaint filed by a user of rail service on the line (or by a state or local government entity acting on behalf of such user) regarding cessation of service over the line either is pending with the Surface Transportation Board (Board) or with any U.S. District Court or has been decided in favor of complainant within the 2-year period; and (4) the requirements at 49 CFR 1105.7 (environmental reports), 49 CFR 1105.8 (historic reports), 49 CFR 1105.11 (transmittal letter), 49 CFR 1105.12 (newspaper publication), and 49 CFR 1152.50(d)(1) (notice to governmental agencies) have been met.

As a condition to this exemption, any employee adversely affected by the abandonment shall be protected under *Oregon Short Line R. Co.—Abandonment—Goshen,* 360 I.C.C. 91 (1979). To address whether this condition adequately protects affected employees, a petition for partial revocation under 49 U.S.C. 10502(d) must be filed. Provided no formal expression of intent to file an offer of financial assistance (OFA) has been received, this exemption will be effective on July 29, 1998, unless stayed pending reconsideration. Petitions to stay that do not involve environmental issues,[1] formal expressions of intent to file an OFA under 49 CFR 1152.27(c)(2),[2] and trail use/rail banking requests under 49 CFR 1152.29 must be filed by July 9, 1998. Petitions to reopen or requests for public use conditions under 49 CFR 1152.28 must be filed by July 20, 1998, with: Surface Transportation Board, Office of the Secretary, Case Control Unit, 1925 K Street, NW, Washington, DC 20423.

A copy of any petition filed with the Board should be sent to applicant's representative: Daniel J. Sweeney, 1750 Pennsylvania Ave., NW, Washington, DC 20006

If the verified notice contains false or misleading information, the exemption is void *ab initio.*

Knox has filed an environmental report which addresses the abandonment's effects, if any, on the environment and historic resources. The Section of Environmental Analysis (SEA) will issue an environmental assessment (EA) by July 3, 1998. Interested persons may obtain a copy of the EA by writing to SEA (Room 500, Surface Transportation Board, Washington, DC 20423) or by calling SEA, at (202) 565–1545. Comments on environmental and historic preservation matters must be filed within 15 days after the EA becomes available to the public.

Environmental, historic preservation, public use, or trail use/rail banking conditions will be imposed, where appropriate, in a subsequent decision.

Pursuant to the provisions of 49 CFR 1152.29(e)(2), Knox shall file a notice of consummation with the Board to signify that it has exercised the authority granted and fully abandoned the line. If consummation has not been effected by Knox's filing of a notice of consummation by June 29, 1999, and there are no legal or regulatory barriers to consummation, the authority to abandon will automatically expire.

Board decisions and notices are available on our website at ''WWW.STB.DOT.GOV.''

Decided: June 19, 1998.

[1] The Board will grant a stay if an informed decision on environmental issues (whether raised by a party or by the Board's Section of Environmental Analysis in its independent investigation) cannot be made before the exemption's effective date. *See Exemption of Out-of-Service Rail Lines,* 5 I.C.C.2d 377 (1989). Any request for a stay should be filed as soon as possible so that the Board may take appropriate action before the exemption's effective date.

[2] Each offer of financial assistance must be accompanied by the filing fee, which currently is set at $1000. *See* 49 CFR 1002.2(f)(25).

By the Board, David M. Konschnik, Director, Office of Proceedings.

Vernon A. Williams,

Secretary.

[FR Doc. 98–16927 Filed 6–26–98; 8:45 am]

BILLING CODE 4915–00–P

DEPARTMENT OF THE TREASURY

Office of the Secretary

List of Countries Requiring Cooperation With an International Boycott

In order to comply with the mandate of section 999(a)(3) of the Internal Revenue Code of 1986, the Department of the Treasury is publishing a current list of countries which may require participation in, or cooperation with, an international boycott (within the meaning of section 999(b)(3) of the Internal Revenue Code of 1986).

On the basis of the best information currently available to the Department of the Treasury, the following countries may require participation in, or cooperation with, an international boycott (within the meaning of section 999(b)(3) of the Internal Revenue Code of 1986): Bahrain, Iraq, Kuwait, Lebanon, Libya, Oman, Qatar, Saudi Arabia, Syria, United Arab Emirates, Yemen, Republic of.

Dated: June 19, 1998.

Philip West,

International Tax Counsel (Tax Policy).

[FR Doc. 98–17153 Filed 6–26–98; 8:45 am]

BILLING CODE 4810–25–M

Corrections

Federal Register

Vol. 63, No. 124

Monday, June 29, 1998

This section of the FEDERAL REGISTER contains editorial corrections of previously published Presidential, Rule, Proposed Rule, and Notice documents. These corrections are prepared by the Office of the Federal Register. Agency prepared corrections are issued as signed documents and appear in the appropriate document categories elsewhere in the issue.

DEPARTMENT OF JUSTICE

Immigration and Naturalization Service

8 CFR Parts 3, 240, 245, 274a and 299

[INS No. 1893-97; AG Order No. 2154–98]

RIN 1115–AF04

Adjustment of Status for Certain Nationals of Nicaragua and Cuba

Correction

In rule document 98–13246 beginning on page 27823, in the issue of Thursday, May 21, 1998, make the following corrections:

On page 27828, in the second column, in the second full paragraph, in the third line, ''deporting'' should read ''deportation''; in the fourth line, ''removing'' should read ''removal''; and in the fifth line, ''to'' should read ''may be''.

BILLING CODE 1505–01–D

SECURITIES AND EXCHANGE COMMISSION

[Release No. 34–40075; File No. SR–CBOE–98–07]

Self-Regulatory Organizations; Order Approving Proposed Rule Change by the Chicago Board Options Exchange, Incorporated Relating to the Committee Responsible for Governing RAES Participation in SPX

Correction

In notice document 98–15780 appearing on page 32668 in the issue of Monday, June 15, 1998, make the following correction:

On page 32688, in the third column, following the last paragraph, the signature line should read as set forth below:

Margaret H. McFarland,

Deputy Secretary.

BILLING CODE 1505–01–D

DEPARTMENT OF THE TREASURY

Office of the Comptroller of the Currency

12 CFR Part 10

[Docket No. 98–08]

RIN 1557–AB62

Municipal Securities Dealers

Correction

In rule document 98–14016, beginning on page 29092, in the issue of Thursday, May 28, 1998, make the following correction:

§ 10.2 [Corrected]

On page 29094, in the second column, in § 10.2(c), the second sentence should be removed.

BILLING CODE 1505–01–D

DEPARTMENT OF TRANSPORTATION

Federal Aviation Administration

14 CFR Part 71

[Airspace Docket No. 97–ANM–21]

Amendment of Class E Airspace; Cedar City, UT

Correction

In rule document 98–14539 beginning on page 29943 in the issue of Tuesday, June 2, 1998, make the following correction:

§ 71.1 [Corrected]

On page 29944, in the first column, under the heading **ANM UT E5 Cedar City, UT [Revised]**:

1. In the eighth line ''35°45′00″'' should read ''37°45′00″''.

2. In the tenth line ''113°15′30″'' should read ''113°15′00″''.

BILLING CODE 1505–01–D

federal register

Monday
June 29, 1998

Part II

Department of Agriculture

Rural Utilities Service

7 CFR Part 1724

Electric Engineering, Architectural Services and Design Policies and Procedures; Final Rule

DEPARTMENT OF AGRICULTURE

Rural Utilities Service

7 CFR Part 1724

RIN 0572–AA48

Electric Engineering, Architectural Services and Design Policies and Procedures

AGENCY: Rural Utilities Service, USDA.

ACTION: Final rule.

SUMMARY: The Rural Utilities Service (RUS) is amending its regulations on engineering and architectural services. These policies and procedures are presently contained in seven RUS bulletins, which will be rescinded after this regulation becomes effective. This rule simplifies and codifies RUS policy and procedures to be followed by electric borrowers relating to architectural and engineering services. This rule also simplifies and codifies RUS requirements for the planning and design of electric distribution, transmission, and generation systems and facilities owned by RUS borrowers.

DATES: Effective Date: July 29, 1998.

Incorporation by Reference: Incorporation by reference of certain publications listed in this final rule is approved by the Director of the Federal Register as of July 29, 1998.

FOR FURTHER INFORMATION CONTACT: Mr. Fred J. Gatchell, Deputy Director, Electric Staff Division, Rural Utilities Service, U.S. Department of Agriculture, Stop 1569, 1400 Independence Ave., SW., Washington, DC 20250–1569. Telephone: (202) 720–1398. FAX: (202) 720–7491. E-mail: fgatchel@rus.usda.gov.

SUPPLEMENTARY INFORMATION:

Executive Order 12372

This rule is excluded from the scope of Executive Order 12372, Intergovernmental Consultation, which may require consultation with State and local officials. A Final Rule Related Notice entitled ''Department Programs and Activities Excluded from Executive Order 12372,'' (50 FR 47034) exempted RUS loans and loan guarantees from coverage under this order.

Executive Order 12866

This rule has been determined to be not significant for the purposes of Executive Order 12866 and, therefore, has not been reviewed by the Office of Management and Budget (OMB).

Executive Order 12988

This rule has been reviewed under Executive Order 12988, Civil Justice Reform. RUS has determined that this rule meets the applicable standards provided in section 3 of the Executive Order.

Regulatory Flexibility Act Certification

The Administrator of RUS has determined that a rule relating to the RUS electric loan program is not a rule as defined in the Regulatory Flexibility Act (5 U.S.C. 601 *et seq.*) and, therefore, the Regulatory Flexibility Act does not apply to this rule.

National Environmental Policy Act Certification

The Administrator of RUS has determined that this rule will not significantly affect the quality of the human environment as defined by the National Environmental Policy Act of 1969 (42 U.S.C. 4321 *et seq.*). Therefore, this action does not require an environmental impact statement or assessment.

Catalog of Federal Domestic Assistance

The program described by this rule is listed in the Catalog of Federal Domestic Assistance programs under No. 10.850, Rural Electrification Loans and Loan Guarantees. This catalog is available on a subscription basis from the Superintendent of Documents, the United States Government Printing Office, Washington, DC 20402–9325.

National Performance Review

The regulatory action is being taken as part of the National Performance Review program to eliminate unnecessary regulations and improve those that remain in force.

Information Collection and Recordkeeping Requirements

The recordkeeping and reporting burdens contained in this rule will be submitted to OMB for approval. The paperwork contained in this rule will not be effective until approved by OMB.

Send questions or comments regarding any aspect of this collection of information, including suggestions for reducing the burden, to F. Lamont Heppe, Jr., Director, Program Development and Regulatory Analysis, Rural Utilities Service, U.S. Department of Agriculture, Stop 1522, 1400 Independence Ave., SW., Washington, DC 20250–1522.

Unfunded Mandates

This rule contains no Federal mandates (under the regulatory provision of Title II of the Unfunded Mandates Reform Act of 1995) for State, local, and tribal governments or the private sector. Thus, this rule is not subject to the requirements of sections 202 and 205 of the Unfunded Mandates Reform Act of 1995.

Background

RUS has promulgated regulations pertaining to the design and construction of RUS electric borrower's systems. These regulations are contained in 7 CFR chapter XVII, part 1724, Electric Engineering, Architectural Services and Design Policies and Procedures, which describes policies and procedures pertaining to RUS electric borrower procurement of architectural and engineering services for planning, design, and construction management of buildings and electric utility plant such as distribution and transmission lines, substations, communications and control systems, and generating plants.

The policies and procedures covered by this rule are presently contained in RUS Bulletins 41–1, Engineering Services for Electric Borrowers; 42–1, Architectural Services for Electric Borrowers; 60–1, Standards for the Preparation of Circuit Diagrams, Electrical Data Sheets, and Other Drawings for Systems of Electrical Borrowers; 60–2, Electric System Capacity; 80–11, Reports of Progress of Construction and Engineering Services; 81–9, Preparation of Plans and Specifications for Distribution and Transmission Facilities; and 86–2, Pre-Construction Activities for Headquarters Facilities for Electric Borrowers. The previous policies and procedures are being changed and updated by this rule. Upon the effective date of this rule, RUS Bulletins 41–1, 42–1, 60–1, 60–2, 80–11, 81–9, and 86–2 will be superseded and rescinded.

The major substantive changes are as follows:

(a) This rule eliminates the requirement for RUS approval of the borrower's selection of the architect and of the engineer.

(b) This rule eliminates the requirement for RUS approval of architectural services contracts and distribution and transmission engineering services contracts for all facilities, and generation engineering services contracts if the facilities are not financed by RUS.

(c) This rule eliminates the requirement for RUS approval for closeout of architectural or engineering services contracts.

(d) This rule eliminates the requirement for submittal of progress reports to RUS for facilities not financed by RUS.

(e) This rule eliminates the requirement for RUS approval of many

plans and specifications. However, many requirements, such as the National Electrical Safety Code (NESC), Occupational Safety and Health Act of 1970 (29 U.S.C. 651 *et seq.*), building accessibility standards, RUS standards, specifications, and use of acceptable materials, etc., apply regardless of the source of financing.

(f) Design data that have been approved by RUS may be used for new facilities without further approval.

(g) This rule will simplify and clarify RUS requirements regarding system design.

(h) This rule combines seven bulletins and three contracting forms.

Comments

On August 4, 1997, RUS published a proposed rule at 62 FR 41883. Comments were received from 13 parties, including one cooperative association, 2 engineering associations, 3 distribution borrowers, 3 power supply borrowers, and 4 engineering firms. RUS considered all comments. All substantive comments are addressed herein.

Some commenters suggested that RUS eliminate the requirement that RUS borrowers use RUS standards and RUS accepted materials, especially when the project is financed from sources other than RUS, and to eliminate all RUS approvals when the project is financed from sources other than RUS. RUS disagrees with this approach. Any project that is part of a borrower's interrelated electrical system can impact the collateral that serves as security for loans and guarantees made by RUS. Inadequate design or materials in one part of the system, regardless of how financed, can adversely affect the entire system. RUS considers the requirements that RUS borrowers use RUS standards and accepted materials and for RUS approvals as proposed are in the government's best interests as lender.

One commenter suggested that RUS clarify the applicability of prior editions of the National Electrical Safety Code (NESC). Since the NESC itself specifically addresses facilities that comply with prior editions of the NESC, no change is needed in the rule.

Some commenters suggested that RUS allow non-licensed engineers to do certain work and not require all employed engineers to be registered. Nothing in the proposed rule requires each and every person doing engineering work to be registered. Generally, the rule allows the a borrower to use qualified non-licensed subordinates to do engineering work to the same extent as allowed by applicable State engineering regulations.

Several commenters suggested that RUS allow more than 6 months for inspection of work order construction. RUS disagrees with this comment. Inspection of work order construction is important to the safety of the public and the borrower's employees, and should be completed as expeditiously as possible. Where special circumstances (e.g., unusual weather conditions) preclude inspection within six months, the borrower may request a waiver of this time requirement.

Several commenters suggested that RUS not require that inspected work orders be noted and initialed on the RUS Form 219. In response to this comment, RUS has eliminated the requirement that the inspected work orders be noted and initialed, requiring only that the inspected work orders be indicated on the RUS Form 219.

One commenter suggested that RUS not require RUS Form 219 to be used for work on facilities not financed by RUS. It is not RUS' intent to require RUS Form 219 for work on facilities not financed by RUS. The final rule clarifies this point.

One commenter suggested that RUS not prohibit the borrower's manager from certifying the RUS Form 219. RUS believes that its long-standing requirement for separation of responsibility continues to have merit while causing little borrower inconvenience. No change has been made in the final rule.

One commenter suggested that RUS allow as-built drawings as a substitute for staking sheets in connection with work order inspection. In response to this comment, RUS has changed the final rule accordingly.

Some commenters suggested that RUS allow borrowers to use either an architect or an engineer for the design of buildings and that RUS should allow the borrower, instead of the architect or engineer, to do the construction management. One commenter noted that RUS Form 220 requires electrical, mechanical, and structural expertise that an architect may not have. It is RUS' intent that all work be done by individuals and organizations well qualified to do the work. This could include having an engineer design buildings with architectural assistance, the borrower doing construction management with engineering or architectural assistance, or an architect obtaining additional electrical, mechanical, and structural expertise. Since nothing in the rule is contrary to this interpretation, no change is needed in the rule.

One commenter suggested that there should be specific time limits placed on RUS in connection with the approval process. RUS understands the commenter's concern, but disagrees with the commenter's solution. While RUS makes every effort to support the borrower's schedule by providing timely approvals, an automatic approval after a given period of time is not consistent with the purpose of RUS approval. No change has been made in the final rule.

Some commenters suggested that RUS use a standard form of engineering services contract based on one prepared by the Engineers Joint Contract Documents Committee in lieu of the RUS standard form, while another commenter suggested that RUS rewrite the standard form of engineering services contract to conform to current business practices. Other commenters noted that the proposed rule's requirement that the engineer's documents comply with all environmental regulations could be construed as a warranty or guarantee of services and RUS should modify the proposed rule to eliminate this express warranty or guarantee. Other commenters suggested that RUS not require engineers to provide construction management services nor to ''supervise'' construction. One commenter suggested that RUS not require the engineer to ''inspect'' construction, and that the engineer's obligation should be to ''observe'' construction. RUS believes that the RUS standard form of engineering services contract, based on many years of successful use by RUS borrowers, is still fundamentally sound. Certain specific comments have been addressed and changes made in the standard form of engineering services contract to clarify certain provisions of the contract.

One commenter noted that RUS stated that only 3 contract forms are required, but § 1724.70 lists 12 forms. The forms listed in § 1724.70 are available from RUS, but only those so indicated are required to be used. The others forms are available for use by borrowers but are not required. The final rule clarifies this point.

Some commenters suggested that RUS not require borrowers to use the standard contract forms for small jobs (e.g., less then $75,000 or 5 percent of total utility plant.) RUS disagrees with this comment. A small engineering job can have a significant impact on a much larger project. Also, the standard contract forms are only required for RUS financed facilities, which tend to be larger projects. No change has been made in the final rule.

Several commenters suggested that RUS not require professional liability insurance of $1, 000,000. In response to

this comment, RUS has changed the required amount of insurance to $500,000.

One commenter suggested that RUS allow computer generated forms in lieu of the standard printed version, since ''reasonable modifications and additions'' to the standard forms are permitted. RUS disagrees with this. RUS believes that the most effective means of maintaining accurate and recognizable forms is to continue to use the preprinted version. No change has been made in the final rule.

One commenter suggested that RUS eliminate the sample compensation schedule from the RUS Form 220. RUS has determined that the sample compensation schedule is not necessary and has been eliminated.

One commenter suggested that the RUS Forms 220 and 236 require the engineer to get the owner's permission to open bids if three or fewer bids are received, as is the case in the RUS Form 211. This commenter also suggested that RUS Form 220 should require the architect to inspect materials and equipment prior to incorporation into the project, and to reject those not in conformance with the specification, as is the case in the RUS Forms 211 and 236. RUS agrees that the standard forms of contract should be consistent in these areas and has modified the forms accordingly.

List of Subjects in 7 CFR Part 1724

Electric power, Incorporation by reference, Loan programs—energy, Reporting and recordkeeping requirements, Rural areas.

In view of the above, RUS hereby amends 7 CFR chapter XVII by revising part 1724 to read as follows:

PART 1724—ELECTRIC ENGINEERING, ARCHITECTURAL SERVICES AND DESIGN POLICIES AND PROCEDURES

Subpart A—General

Sec.
1724.1 Introduction.
1724.2 Waivers.
1724.3 Definitions.
1724.4 Qualifications.
1724.5 Submission of documents to RUS.
1724.6 Insurance requirements.
1724.7 Debarment and suspension.
1724.8 Restrictions on lobbying.
1724.9 Environmental compliance.
1724.10–1724.19 [Reserved]

Subpart B—Architectural Services

1724.20 Borrowers' requirements—architectural services.
1724.21 Architectural services contracts.
1724.22–1724.29 [Reserved]

Subpart C—Engineering Services

1724.30 Borrowers' requirements—engineering services.
1724.31 Engineering services contracts.
1724.32 Inspection and certification of work order construction.
1724.33–1724.39 [Reserved]

Subpart D—Electric System Planning

1724.40 General.
1724.41–1724.49 [Reserved]

Subpart E—Electric System Design

1724.50 Compliance with National Electrical Safety Code (NESC).
1724.51 Design requirements.
1724.52 Permitted deviations from RUS construction standards.
1724.53 Preparation of plans and specifications.
1724.54 Requirements for RUS approval of plans and specifications.
1724.55 Dam safety.
1724.56–1724.69 [Reserved]
Appendix A to subpart E of part 1724—Hazard Potential Classification for Civil Works Projects

Subpart F—RUS Contract Forms

1724.70 List of RUS contract forms for architectural and engineering services.
1724.71 Use of printed forms.
1724.72–1724.73 [Reserved]
1724.74 Engineering service contract for the design and construction of a generating plant, RUS Form 211.
1724.75 Architectural service contract, RUS Form 220.
1724.76 Engineering service contract—electric system design and construction, RUS Form 236.
1724.77–1724.99 [Reserved]

Authority: 7 U.S.C. 901 *et seq.*, 1921 *et seq.*, 6941 *et seq.*

Subpart A—General

§ 1724.1 Introduction.

(a) The policies, procedures and requirements in this part implement certain provisions of the standard form of loan documents between the Rural Utilities Service (RUS) and its electric borrowers.

(b) All borrowers, regardless of the source of financing, shall comply with RUS' requirements with respect to design, construction standards, and the use of RUS accepted material on their electric systems.

(c) Borrowers are required to use RUS contract forms only if the facilities are financed by RUS.

§ 1724.2 Waivers.

The Administrator may waive, for good cause on a case-by-case basis, requirements and procedures of this part.

§ 1724.3 Definitions.

Terms used in this part have the meanings set forth in § 1710.2 of this chapter. References to specific RUS forms and other RUS documents, and to specific sections or lines of such forms and documents, shall include the corresponding forms, documents, sections and lines in any subsequent revisions of these forms and documents. In addition to the terms defined in § 1710.2 of this chapter, the following terms have the following meanings for the purposes of this part:

Architect means a registered or licensed person employed by the borrower to provide architectural services for a project and duly authorized assistants and representatives.

Engineer means a registered or licensed person, who may be a staff employee or an outside consultant, to provide engineering services and duly authorized assistants and representatives.

Force account construction means construction performed by the borrower's employees.

NESC means the National Electrical Safety Code.

Repowering means replacement of the steam generator or the prime mover or both at a generating plant.

RUS approval means written approval by the Administrator or a representative with delegated authority. RUS approval must be in writing, except in emergency situations where RUS approval may be given orally followed by a confirming letter.

RUS financed means financed or funded wholly or in part by a loan made or guaranteed by RUS, including concurrent supplemental loans required by § 1710.110 of this chapter, loans to reimburse funds already expended by the borrower, and loans to replace interim financing.

§ 1724.4 Qualifications.

The borrower shall ensure that:

(a) All selected architects and engineers meet the applicable registration and licensing requirements of the States in which the facilities will be located;

(b) All selected architects and engineers are familiar with RUS standards and requirements; and

(c) All selected architects and engineers have had satisfactory experience with comparable work.

§ 1724.5 Submission of documents to RUS.

(a) *Where to send documents.* Documents required to be submitted to RUS under this part are to be sent to the office of the borrower's respective RUS Regional Director, the Power Supply Division Director, or such other office of RUS as designated by RUS. (See part 1700 of this chapter.)

(b) *Contracts requiring RUS approval.* The borrower shall submit to RUS three copies of each contract that is subject to RUS approval under subparts B and C of this part. At least one copy of each contract must be an original signed in ink (i.e., no facsimile signature). Each contract submittal must be accompanied by a certified copy of the board resolution awarding the contract.

(c) *Contract amendments requiring RUS approval.* The borrower shall submit to RUS three copies of each contract amendment (at least one copy of which must be an original signed in ink) which is subject to RUS approval. Each contract amendment submittal to RUS must be accompanied by a certified copy of the board resolution approving the amendment.

§ 1724.6 Insurance requirements.

(a) Borrowers shall ensure that all architects and engineers working under contract with the borrower have insurance coverage as required by part 1788 of this chapter.

(b) Borrowers shall also ensure that all architects and engineers working under contract with the borrower have insurance coverage for Errors and Omissions (Professional Liability Insurance) in an amount at least as large as the amount of the architectural or engineering services contract but not less than $500,000.

§ 1724.7 Debarment and suspension.

Borrowers shall comply with the requirements on debarment and suspension in connection with procurement activities as set forth in part 3017 of this title, particularly with respect to lower tier transactions, e.g., procurement contracts for goods or services.

§ 1724.8 Restrictions on lobbying.

Borrowers shall comply with the restrictions and requirements in connection with procurement activities as set forth in part 3018 of this title.

§ 1724.9 Environmental compliance.

Borrowers shall comply with the requirements of part 1794 of this chapter, Environmental Policies and Procedures for Electric and Telephone Borrowers.

§§ 1724.10–1724.19 [Reserved]

Subpart B—Architectural Services

§ 1724.20 Borrowers' requirements—architectural services.

The provisions of this section apply to all borrower electric system facilities regardless of the source of financing.

(a) Each borrower shall select a qualified architect to perform the architectural services required for the design and construction management of headquarters facilities. The selection of the architect is not subject to RUS approval unless specifically required by RUS on a case by case basis. Architect's qualification information need not be submitted to RUS unless specifically requested by RUS on a case by case basis.

(b) The architect retained by the borrower shall not be an employee of the building supplier or contractor, except in cases where the building is prefabricated and pre-engineered.

(c) The architect's duties are those specified under the Architectural Services Contract and under subpart E of this part, and, as applicable, those duties assigned to the ''engineer'' for competitive procurement procedures in part 1726 of this chapter.

(d) If the facilities are RUS financed, the borrower shall submit or require the architect to submit one copy of each construction progress report to RUS upon request.

(e) Additional information concerning RUS requirements for electric borrowers' headquarters facilities are set forth in subpart E of this part. See also RUS Bulletin 1724E–400, Guide to Presentation of Building Plans and Specifications, for additional guidance. This bulletin is available from Program Development and Regulatory Analysis, Rural Utilities Service, U.S. Department of Agriculture, Stop 1522, 1400 Independence Ave., SW., Washington, DC 20250–1522.

§ 1724.21 Architectural services contracts.

The provisions of this section apply only to RUS financed electric system facilities.

(a) RUS Form 220, Architectural Services Contract, must be used by electric borrowers when obtaining architectural services.

(b) The borrower shall ensure that the architect furnishes or obtains all architectural services related to the design and construction management of the facilities.

(c) Reasonable modifications or additions to the terms and conditions in the RUS contract form may be made to define the exact services needed for a specific undertaking. Such modifications or additions shall not relieve the architect or the borrower of the basic responsibilities required by the RUS contract form, and shall not alter any terms and conditions required by law. All substantive changes must be approved by RUS prior to execution of the contract.

(d) Architectural services contracts are not subject to RUS approval and need not be submitted to RUS unless specifically requested by RUS on a case by case basis.

(e) *Closeout.* Upon completion of all services and obligations required under each architectural services contract, including, but not limited to, submission of final documents, the borrower must closeout that contract. The borrower shall obtain from the architect a final statement of cost, which must be supported by detailed information as appropriate. For example, out-of-pocket expense and per diem types of compensation should be listed separately with labor, transportation, etc., itemized for each service involving these types of compensation. RUS Form 284, Final Statement of Cost for Architectural Service, may be used. All computations of the compensation must be made in accordance with the terms of the architectural services contract. Closeout documents need not be submitted to RUS unless specifically requested by RUS on a case by case basis.

§§ 1724.22–1724.29 [Reserved]

Subpart C—Engineering Services

§ 1724.30 Borrowers' requirements—engineering services.

The provisions of this section apply to all borrower electric system facilities regardless of the source of financing.

(a) Each borrower shall select one or more qualified persons to perform the engineering services involved in the planning, design, and construction management of the system.

(b) Each borrower shall retain or employ one or more qualified engineers to inspect and certify all new construction in accordance with § 1724.32. The engineer must not be the borrower's manager.

(c) The selection of the engineer is not subject to RUS approval unless specifically required by RUS on a case by case basis. Engineer's qualification information need not be submitted to RUS unless specifically requested by RUS on a case by case basis.

(d) The engineer's duties are specified under the Engineering Services Contract and under part 1726 of this chapter. The borrower shall ensure that the engineer executes all certificates and other instruments pertaining to the engineering details required by RUS.

(e) Additional requirements related to appropriate seismic safety measures are contained in part 1792, subpart C, of this chapter, Seismic Safety of Federally Assisted New Building Construction.

(f) If the facilities are RUS financed, the borrower shall submit or require the engineer to submit one copy of each

construction progress report to RUS upon RUS' request.

§ 1724.31 Engineering services contracts.

The provisions of this section apply only to RUS financed electric system facilities.

(a) RUS contract forms for engineering services shall be used. Reasonable modifications or additions to the terms and conditions in the RUS contract form may be made to define the exact services needed for a specific undertaking. Any such modifications or additions shall not relieve the engineer or the borrower of the basic responsibilities required by the RUS contract form, and shall not alter any terms and conditions required by law. All substantive changes to the RUS contract form shall be approved by RUS prior to execution of the contract.

(b) RUS Form 236, Engineering Service Contract—Electric System Design and Construction, shall be used for all distribution, transmission, substation, and communications and control facilities. These contracts are not subject to RUS approval and need not be submitted to RUS unless specifically requested by RUS on a case by case basis.

(c) RUS Form 211, Engineering Service Contract for the Design and Construction of a Generating Plant, shall be used for all new generating units and repowering of existing units. These contracts require RUS approval.

(d) Any amendments to RUS approved engineering services contracts require RUS approval.

(e) *Closeout.* Upon completion of all services and obligations required under each engineering services contract, including, but not limited to, submission of final documents, the borrower must closeout the contract. The borrower shall obtain from the engineer a completed final statement of engineering fees, which must be supported by detailed information as appropriate. RUS Form 234, Final Statement of Engineering Fee, may be used. All computations of the compensation shall be made in accordance with the terms of the engineering services contract. Closeout documents need not be submitted to RUS unless specifically requested by RUS on a case by case basis.

§ 1724.32 Inspection and certification of work order construction.

The provisions of this section apply to all borrower electric system facilities regardless of the source of financing.

(a) The borrower shall ensure that all field inspection and related services are performed within 6 months of the completion of construction, and are performed by a licensed engineer, except that a subordinate of the licensed engineer may make the inspection, provided the following conditions are met:

(1) The inspection by the subordinate is satisfactory to the borrower;

(2) This practice is acceptable under applicable requirements of the States in which the facilities are located;

(3) The subordinate is experienced in making such inspections;

(4) The name of the person making the inspection is included in the certification; and

(5) The licensed engineer signs such certification which appears on the inventory of work orders.

(b) The inspection shall include a representative and sufficient amount of construction listed on each RUS Form 219, Inventory of Work Orders (or comparable form), being inspected to assure the engineer that the construction is acceptable. Each work order that was field inspected shall be indicated on RUS Form 219 (or comparable form.) The inspection services shall include, but not be limited to, the following:

(1) Determination that construction conforms to RUS specifications and standards and to the requirements of the National Electrical Safety Code (NESC), State codes, and local codes;

(2) Determination that the staking sheets or as-built drawings represent the construction completed and inspected;

(3) Preparation of a list of construction clean-up notes and staking sheet discrepancies to be furnished to the owner to permit correction of construction, staking sheets, other records, and work order inventories;

(4) Reinspection of construction corrected as a result of the engineer's report;

(5) Noting, initialing, and dating the staking or structure sheets or as-built drawings and noting the corresponding work order entry for line construction; and

(6) Noting, initialing, and dating the as-built drawings or sketches for generating plants, substations, and other major facilities.

(c) *Certification.* (1) The following certification must appear on all inventories of work orders:

> I hereby certify that sufficient inspection has been made of the construction reported by this inventory to give me reasonable assurance that the construction complies with applicable specifications and standards and meets appropriate code requirements as to strength and safety. This certification is in accordance with acceptable engineering practice.

(2) A certification must also include the name of the inspector, name of the firm, signature of the licensed engineer, the engineer's State license number, and the date of signature.

§§ 1724.33–1724.39 [Reserved]

Subpart D—Electric System Planning

§ 1724.40 General.

Borrowers shall have ongoing, integrated planning to determine their short-term and long-term needs for plant additions, improvements, replacements, and retirements for their electric systems. The primary components of the planning system consist of long-range engineering plans and construction work plans. Long-range engineering plans identify plant investments required over a long-range period, 10 years or more. Construction work plans specify and document plant requirements for a shorter term, 2 to 4 years. Long-range engineering plans and construction work plans shall be in accordance with part 1710, subpart F, of this chapter. See also RUS Bulletins 1724D–101A, Electric System Long-Range Planning Guide, and 1724D–101B, System Planning Guide, Construction Work Plans, for additional guidance. These bulletins are available from Program Development and Regulatory Analysis, Rural Utilities Service, U.S. Department of Agriculture, Stop 1522, 1400 Independence Ave., SW., Washington, DC 20250–1522.

§§ 1724.41–1724.49 [Reserved]

Subpart E—Electric System Design

§ 1724.50 Compliance with National Electrical Safety Code (NESC).

The provisions of this section apply to all borrower electric system facilities regardless of the source of financing.

(a) A borrower shall ensure that its electric system, including all electric distribution, transmission, and generating facilities, is designed, constructed, operated, and maintained in accordance with all applicable provisions of the most current and accepted criteria of the National Electrical Safety Code (NESC) and all applicable and current electrical and safety requirements of any State or local governmental entity. Copies of the NESC may be obtained from the Institute of Electrical and Electronic Engineers, Inc., 445 Hoes Lane, Piscataway, NJ 08855. This requirement applies to the borrower's electric system regardless of the source of financing.

(b) Any electrical standard requirements established by RUS are in addition to, and not in substitution for or a modification of, the most current and accepted criteria of the NESC and

any applicable electrical or safety requirements of any State or local governmental entity.

(c) Overhead distribution circuits shall be constructed with not less than the Grade C strength requirements as described in Section 26, Strength Requirements, of the NESC when subjected to the loads specified in NESC Section 25, Loadings for Grades B and C. Overhead transmission circuits shall be constructed with not less than the Grade B strength requirements as described in NESC Section 26.

§ 1724.51 Design requirements.

The provisions of this section apply to all borrower electric system facilities regardless of the source of financing.

(a) *Distribution.* All distribution facilities must conform to the applicable RUS construction standards and utilize RUS accepted materials.

(b) *Transmission lines.* (1) All transmission line design data must be approved by RUS.

(2) Design data consists of all significant design features, including, but not limited to, transmission line design data summary, general description of terrain, right-of-way calculations, discussion concerning conductor and structure selection, conductor sag and tension information, design clearances, span limitations due to clearances, galloping or conductor separation, design loads, structure strength limitations, insulator selection and design, guying requirements, and vibration considerations. For lines composed of steel or concrete poles, or steel towers, in which load information will be used to purchase the structures, the design data shall also include loading trees, structure configuration and selection, and a discussion concerning foundation selection.

(3) Line design data for uprating transmission lines to higher voltage levels or capacity must be approved by RUS.

(4) Transmission line design data which has received RUS approval in connection with a previous transmission line construction project for a particular borrower is considered approved by RUS for that borrower, provided that:

(i) The conditions on the project fall within the design data previously approved; and

(ii) No significant NESC revisions have occurred.

(c) *Substations.* (1) All substation design data must be approved by RUS.

(2) Design data consists of all significant design features, including, but not limited to, a discussion of site considerations, oil spill prevention measures, design considerations covering voltage, capacity, shielding, clearances, number of low and high voltage phases, major equipment, foundation design parameters, design loads for line support structures and the control house, seismic considerations, corrosion, grounding, protective relaying, and AC and DC auxiliary systems. Reference to applicable safety codes and construction standards are also to be included.

(3) Substation design data which has received RUS approval in connection with a previous substation construction project for a particular borrower is considered approved by RUS for that borrower, provided that:

(i) The conditions on the project fall within the design data previously approved; and

(ii) No significant NESC revisions have occurred.

(d) *Generating facilities.* (1) This section covers all portions of a generating plant including plant buildings, the generator step-up transformer, and the transmission switchyard at a generating plant. Warehouses and equipment service buildings not associated with generation plants are covered under paragraph (e) of this section. Generation plant buildings must meet the requirements of paragraph (e)(1) of this section.

(2) For all new generation units and for all repowering projects, the design outline shall be approved by RUS, unless RUS determines that a design outline is not needed for a particular project.

(3) The design outline will include all significant design criteria. During the early stages of the project, RUS will, in consultation with the borrower and its consulting engineer, identify the specific items which are to be included in the design outline.

(e) *Headquarters.* (1) *Applicable laws.* The design and construction of headquarters facilities shall comply with all applicable Federal, State, and local laws and regulations, including, but not limited to:

(i) Section 504 of the Rehabilitation Act of 1973, (29 U.S.C. 794), which states that no qualified individual with a handicap shall, solely by reason of their handicap, be excluded from participation in, be denied the benefits of, or be subject to discrimination under any program or activity receiving Federal financial assistance. The Uniform Federal Accessibility Standards (41 CFR part 101–19, subpart 101–19.6, appendix A) are the applicable standards for all new or altered borrower buildings, regardless of the source of financing.

(ii) The Architectural Barriers Act of 1968 (42 U.S.C. 4151), which requires that buildings financed with Federal funds are designed and constructed to be accessible to the physically handicapped.

(iii) The Earthquake Hazards Reduction Act of 1977 (42 U.S.C. 7701 *et seq.*), and Executive Order 12699, Seismic Safety of Federal and Federally Assisted or Regulated New Building Construction (3 CFR 1990 Comp., p. 269). Appropriate seismic safety provisions are required for new buildings for which RUS provides financial assistance. (See part 1792, subpart C, of this chapter.)

(2) The borrower shall provide evidence, satisfactory in form and substance to the Administrator, that each building will be designed and built in compliance with all Federal, State, and local requirements.

(f) *Communications and control.* (1) This section covers microwave and powerline carrier communications systems, load control, and supervisory control and data acquisition (SCADA) systems.

(2) The performance considerations for a new or replacement master system must be approved by RUS. A master system includes the main controller and related equipment at the main control point. Performance considerations include all major system features and their justification, including, but not limited to, the objectives of the system, the types of parameters to be controlled or monitored, the communication media, alternatives considered, and provisions for future needs.

§ 1724.52 Permitted deviations from RUS construction standards.

The provisions of this section apply to all borrower electric system facilities regardless of the source of financing.

(a) *Structures for raptor protection.* (1) RUS standard distribution line structures may not have the extra measure of protection needed in areas frequented by eagles and other large raptors to protect such birds from electric shock due to physical contact with energized wires. Where raptor protection in the design of overhead line structures is required by RUS; a Federal, State or local authority with permit or license authority over the proposed construction; or where the borrower voluntarily elects to comply with the recommendations of the U.S. Fish and Wildlife Service or State wildlife agency, borrowers are permitted to deviate from RUS construction standards, provided:

(i) Structures are designed and constructed in accordance with

''Suggested Practices for Raptor Protection on Powerlines: The State of the Art in 1996'' (Suggested Practices for Raptor Protection); and,

(ii) Structures are in accordance with the NESC and applicable State and local regulations.

(2) Any deviation from the RUS construction standards for the purpose of raptor protection, which is not in accordance with the Suggested Practices for Raptor Protection, must be approved by RUS prior to construction. ''Suggested Practices for Raptor Protection on Powerlines: The State of the Art in 1996,'' published by the Edison Electric Institute/Raptor Research Foundation, is hereby incorporated by reference. This incorporation by reference is approved by the Director of the Office of the Federal Register in accordance with 5 U.S.C. 552(a) and 1 CFR part 51. Copies of this publication may be obtained from the Raptor Research Foundation, Inc., c/o Jim Fitzpatrick, Treasurer, Carpenter Nature Center, 12805 St. Croix Trail South, Hastings, Minnesota 55033. It is also available for inspection during normal business hours at RUS, Electric Staff Division, 1400 Independence Avenue, SW., Washington, DC, Room 1246–S, and at the Office of the Federal Register, 800 North Capitol Street, NW., Suite 700, Washington, DC.

(b) *Transformer neutral connections.* Where it is necessary to separate the primary and secondary neutrals to provide the required electric service to a consumer, the RUS standard transformer secondary neutral connections may be modified in accordance with Rule 97D2 of the NESC.

(c) *Lowering of neutral conductor on overhead distribution lines.* (1) It is permissible to lower the neutral attachment on standard construction pole-top assemblies an additional distance not exceeding two feet (0.6 m) for the purpose of economically meeting the clearance requirements of the NESC.

(2) It is permissible to lower the transformer and associated neutral attachment up to two feet (0.6 m) to provide adequate clearance between the cutouts and single-phase, conventional distribution transformers.

(3) It is permissible to lower the neutral attachment on standard construction pole-top assemblies an additional distance of up to six feet (2 m) for the purpose of performing construction and future line maintenance on these assemblies from bucket trucks designed for such work.

§ 1724.53 Preparation of plans and specifications.

The provisions of this section apply to all borrower electric system facilities regardless of the source of financing.

(a) *General.* (1) The borrower (acting through the engineer, if applicable) shall prepare plans and specifications that adequately represent the construction to be performed.

(2) Plans and specifications for distribution, transmission, or generating facilities must be based on a construction work plan (as amended, if applicable), engineering study or construction program which has been approved by RUS if financing for the facilities will at any time be requested from RUS.

(b) *Composition of plans and specifications package.* (1) Whether built by force account or contract, each set of plans and specifications must include:

(i) *Distribution lines.* Specifications and drawings, staking sheets, key map and appropriate detail maps;

(ii) *Transmission lines.* Specifications and drawings, transmission line design data manual, vicinity maps of the project, a one-line diagram, and plan and profile sheets;

(iii) *Substations.* Specifications and drawings, including a one-line diagram, plot and foundation plan, grounding plan, and plans and elevations of structure and equipment, as well as all other necessary construction drawings, in sufficient detail to show phase spacing and ground clearances of live parts;

(iv) *Headquarters.* Specifications and drawings, including:

(A) A plot plan showing the location of the proposed building plus paving and site development;

(B) A one line drawing (floor plan and elevation view), to scale, of the proposed building with overall dimensions shown; and

(C) An outline specification including materials to be used (type of frame, exterior finish, foundation, insulation, etc.); and

(v) *Other facilities (e.g., generation and communications and control facilities).* Specifications and drawings, as necessary and in sufficient detail to accurately define the scope and quality of work required.

(2) For contract work, the appropriate standard RUS construction contract form shall be used as required by part 1726 of this chapter.

§ 1724.54 Requirements for RUS approval of plans and specifications.

The provisions of this section apply only to RUS financed electric system facilities.

(a) For any contract subject to RUS approval in accordance with part 1726 of this chapter, the borrower shall obtain RUS approval of the plans and specifications, as part of the proposed bid package, prior to requesting bids. RUS may require approval of other plans and specifications on a case by case basis.

(b) *Distribution lines.* RUS approval of the plans and specifications for distribution line construction is not required if standard RUS drawings, specifications, RUS accepted material, and standard RUS contract forms (as required by part 1726 of this chapter) are used. Drawings, plans and specifications for nonstandard distribution construction must be submitted to RUS and receive approval prior to requesting bids on contracts or commencement of force account construction.

(c) *Transmission lines.* (1) Plans and specifications for transmission construction projects which are not based on RUS approved line design data or do not use RUS standard structures must receive RUS approval prior to requesting bids on contracts or commencement of force account construction.

(2) Unless RUS approval is required by paragraph (a) of this section, plans and specifications for transmission construction which use previously approved design data and standard structures do not require RUS approval. Plans and specifications for related work, such as right-of-way clearing, equipment, and materials, do not require RUS approval unless required by paragraph (a) of this section.

(d) *Substations.* (1)(i) Plans and specifications for all new substations must receive RUS approval prior to requesting bids on contracts or commencement of force account construction, unless:

(A) The substation design has been previously approved by RUS; and

(B) No significant NESC revisions have occurred.

(ii) The borrower shall notify RUS in writing that a previously approved design will be used, including identification of the previously approved design.

(2) Unless RUS approval is required by paragraph (a) of this section, plans and specifications for substation modifications and for substations using previously approved designs do not require RUS approval.

(e) *Generation facilities.* (1) This paragraph (e) covers all portions of a generating plant including plant buildings, the generator step-up transformer, and the transmission

switchyard at a generating plant. Warehouses and equipment service buildings not associated with generation plants are covered under paragraph (f) of this section.

(2) The borrower shall obtain RUS approval, prior to issuing invitations to bid, of the terms and conditions for all generating plant equipment or construction contracts which will cost $1,500,000 or more. Unless RUS approval is required by paragraph (a) of this section, plans and specifications for generating plant equipment and construction do not require RUS approval.

(f) *Headquarters buildings.* (1) This paragraph (f) covers office buildings, warehouses, and equipment service buildings. Generating plant buildings are covered under paragraph (e) of this section.

(2) The borrower shall obtain RUS approval of the plans and specifications for all headquarters buildings prior to issuing invitations to bid. The borrower shall also submit two copies of RUS Form 740g, Application for Headquarters Facilities. The application must show surface area and estimated cost breakdown between office building space and space for equipment warehousing and service facilities. This form is available from Program Development and Regulatory Analysis, Rural Utilities Service, U.S. Department of Agriculture, Stop 1522, 1400 Independence Ave., SW., Washington, DC 20250–1522.

(g) *Communications and control facilities.* (1) This paragraph (g) covers microwave and powerline carrier communications systems, load control, and supervisory control and data acquisition (SCADA) systems.

(2) The borrower shall obtain RUS approval, prior to issuing invitations to bid, of the terms and conditions for communications and control facilities contracts which will cost $500,000 or more. Unless RUS approval is required by paragraph (a) of this section, plans and specifications for communications and control facilities do not require RUS approval.

(h) Terms and conditions include the RUS standard form of contract, general and special conditions, and any other non-technical provisions of the contract. Terms and conditions which have received RUS approval in connection with a previous contract for a particular borrower are considered approved by RUS for that borrower.

§ 1724.55 Dam safety.

(a) The provisions of this section apply only to RUS financed electric system facilities.

(1) (i) Any borrower that owns or operates a RUS financed dam must utilize the ''Federal Guidelines for Dam Safety,'' (Guidelines), as applicable. A dam, as more fully defined in the Guidelines, is generally any artificial barrier which either:

(A) Is 25 feet (8 m) or more in height; or

(B) Has an impounding capacity at maximum water storage elevation of 55 acre-feet (68,000 m^3) or more.

(ii) The ''Federal Guidelines for Dam Safety,'' FEMA 93, June, 1979, published by the Federal Emergency Management Agency (FEMA), is hereby incorporated by reference. This incorporation by reference is approved by the Director of the Office of the Federal Register in accordance with 5 U.S.C. 552(a) and 1 CFR part 51. Copies of the ''Federal Guidelines for Dam Safety'' may be obtained from the Federal Emergency Management Agency, Mitigation Directorate, PO Box 2012, Jessup, MD 20794. It is also available for inspection during normal business hours at RUS, Electric Staff Division, 1400 Independence Avenue, SW., Washington, DC, Room 1246–S, and at the Office of the Federal Register, 800 North Capitol Street, NW., Suite 700, Washington, DC.

(2) The borrower shall evaluate the hazard potential of its dams in accordance with Appendix E of the U.S. Army Corps of Engineers Engineering and Design Dam Safety Assurance Program, ER 1110–2–1155, July 31, 1995. A summary of the hazard potential criteria is included for information as Appendix A to this subpart. The U.S. Army Corps of Engineers Engineering and Design Dam Safety Assurance Program, ER 1110–2–1155, July 31, 1995, published by the United States Army Corps of Engineers, is hereby incorporated by reference. This incorporation by reference is approved by the Director of the Office of the Federal Register in accordance with 5 U.S.C. 552(a) and 1 CFR part 51. Copies of the U. S. Army Corps of Engineers Engineering and Design Dam Safety Assurance Program may be obtained from the U. S. Army Corps of Engineers, Publications Depot, 2803 52nd Ave., Hyattsville, MD 20781. It is also available for inspection during normal business hours at RUS, Electric Staff Division, 1400 Independence Avenue, SW., Washington, DC, Room 1246–S, and at the Office of the Federal Register, 800 North Capitol Street, NW., Suite 700, Washington, DC.

(3) For high hazard potential dams, the borrower must obtain an independent review of the design and critical features of construction. The reviewer must have demonstrated experience in the design and construction of dams of a similar size and nature. The reviewer must be a qualified engineer not involved in the original design of the dam or a Federal or State agency responsible for dam safety. The reviewer must be approved by RUS.

(4) The independent review of design must include, but not necessarily be limited to, plans, specifications, design calculations, subsurface investigation reports, hydrology reports, and redesigns which result from encountering unanticipated or unusual conditions during construction.

(5) The independent review of construction shall include:

(i) *Foundation preparation and treatment.* When the foundation has been excavated and exposed, and before critical structures such as earth embankments or concrete structures are placed thereon, the borrower shall require the reviewer to conduct an independent examination of the foundation to ensure that suitable foundation material has been reached and that the measures proposed for treatment of the foundation are adequate. This examination must extend to the preparation and treatment of the foundation for the abutments.

(ii) *Fill placement.* During initial placement of compacted fill materials, the borrower shall require the reviewer to conduct an independent examination to ensure that the materials being used in the various zones are suitable and that the placement and compaction procedures being used by the contractor will result in a properly constructed embankment.

(6) If the reviewer disagrees with any aspect of the design or construction which could affect the safety of the dam, then the borrower must meet with the design engineer and the reviewer to resolve the disagreements.

(7) *Emergency action plan.* For high hazard potential dams, the borrower must develop an emergency action plan incorporating preplanned emergency measures to be taken prior to and following a potential dam failure. The plan should be coordinated with local government and other authorities involved with the public safety and be approved by the borrower's board of directors.

(b)(1) For more information and guidance, the following publications regarding dam safety are available from FEMA:

(i) ''Emergency Action Planning Guidelines for Dams,'' FEMA 64.

(ii) ''Federal Guidelines for Earthquake Analysis and Design of Dams,'' FEMA 65.

(iii) ''Federal Guidelines for Selecting and Accommodating Inflow Design Floods for Dams,'' FEMA 94.

(iv) ''Dam Safety: An Owner's Guidance Manual,'' FEMA 145, August, 1987.

(2) These publications may be obtained from the Federal Emergency Management Agency, Mitigation Directorate, PO Box 2012, Jessup, MD 20794.

§§ 1724.56—1724.69 [Reserved]

Appendix A to Subpart E of Part 1724—Hazard Potential Classification for Civil Works Projects

The source for this appendix is U. S. Army Corps of Engineers Engineering and Design Dam Safety Assurance Program, ER 1110–2–1155, Appendix E. Appendix E is available from the address listed in § 1724.55(a)(2).

Category [1]	Low	Significant	High
Direct Loss of Life [2]	None expected (due to rural location with no permanent structures for human habitation).	Uncertain (rural location with few residences and only transient or industrial development).	Certain (one or more extensive residential, commercial or industrial development).
Lifeline Losses [3]	No disruption of services—repairs are cosmetic or rapidly repairable damage.	Disruption of essential facilities and access.	Disruption of critical facilities and access.
Property Losses [4] ..	Private agricultural lands, equipment and isolated buildings.	Major public and private facilities	Extensive public and private facilities.
Environmental Losses [5].	Minimal incremental damage	Major mitigation required	Extensive mitigation cost or impossible to mitigate.

Notes:

[1] Categories are based upon project performance and do not apply to individual structures within a project.

[2] Loss of life potential based upon inundation mapping of area downstream of the project. Analysis of loss of life potential should take into account the extent of development and associated population at risk, time of flood wave travel and warning time.

[3] Indirect threats to life caused by the interruption of lifeline services due to project failure, or operation, i.e., direct loss of (or access to) critical medical facilities or loss of water or power supply, communications, power supply, etc.

[4] Direct economic impact of value of property damages to project facilities and down stream property and indirect economic impact due to loss of project services, i.e., impact on navigation industry of the loss of a dam and navigation pool, or impact upon a community of the loss of water or power supply.

[5] Environmental impact downstream caused by the incremental flood wave produced by the project failure, beyond which would normally be expected for the magnitude flood event under a without project conditions.

Subpart F—RUS Contract Forms

§ 1724.70 List of RUS contract forms for architectural and engineering services.

The following RUS contract forms for architectural and engineering services are available:

(a) RUS Form 179, Rev. 9–66, Architects and Engineers Qualifications (optional form);

(b) RUS Form 211, Rev. 6–98, Engineering Service Contract for the Design and Construction of a Generating Plant (required form);

(c) RUS Form 215, Rev. 5–67, Engineering Service Contract—System Planning (optional form);

(d) RUS Form 220, Rev. 6–98, Architectural Services Contract (required form);

(e) RUS Form 234, Rev. 3–57, Final Statement of Engineering Fee (optional form);

(f) RUS Form 236, Rev. 6–98, Engineering Service Contract—Electric System Design and Construction (required form);

(g) RUS Form 241, Rev. 3–56, Amendment of Engineering Service Contract (optional form);

(h) RUS Form 244, Rev. 12–55, Engineering Service Contract—Special Services (optional form);

(i) RUS Form 258, Rev. 4–58, Amendment of Engineering Service Contract—Additional Project (optional form);

(j) RUS Form 284, Rev. 284, Final Statement of Cost for Architectural Service (optional form);

(k) RUS Form 297, Rev. 12–55, Engineering Service Contract—Retainer for Consultation Service (optional form); and

(l) RUS Form 459, Rev. 9–58, Engineering Service Contract—Power Study (optional form).

§ 1724.71 Use of printed forms

(a) Persons wishing to obtain forms referred to in this part should contact: Program Development and Regulatory Analysis, U.S. Department of Agriculture, Stop 1522, 1400 Independence Ave., SW., Washington, DC 20250–1522. These forms may be reproduced as needed.*

(b) If a RUS contract form is required by this part, the borrower shall use the form in the format available from RUS (photocopying or other exact reproduction is acceptable.) The RUS contract forms are not to be retyped, changed, modified, or altered in any manner not specifically authorized in this part or approved by RUS in writing. Any modifications approved by RUS must be clearly shown indicating that they are different from the standard form.

§§ 1724.72—1724.73 [Reserved]

§ 1724.74 Engineering service contract for the design and construction of a generating plant, RUS Form 211.

The contract form in this section shall be used when required by this part.

ENGINEERING SERVICE CONTRACT FOR THE DESIGN AND CONSTRUCTION OF A GENERATING PLANT

AGREEMENT, made _____, _____, between _____ (hereinafter called the ''Owner'') and _____ of _____ hereinafter called the ''Engineer'').

Whereas, the Administrator of the Rural Utilities Service (hereinafter called the ''Administrator'') of the United States of America (hereinafter called the ''Government'') has approved the making of a loan or loan guarantee of not in excess of $_____ by the Government to the Owner pursuant to the Rural Electrification Administration Act of 1936, as amended, approximately $_____ of which is intended to finance, in whole or in part, the construction and operation of an electrical generating plant which is estimated to cost $_____ and consists of _____ in the State of _____, having the Rural Utilities Service project designation of _____, (hereinafter called the ''Project''), located at such place as the Owner with the approval of the Administrator shall designate;

Now, therefore, in consideration of the mutual undertakings herein contained, the parties hereto agree as follows:

Article I

General Obligation of Engineer

In accordance with the normal standards and practices used in the profession, the Engineer shall diligently and competently render all engineering services which shall be necessary or advisable for the expeditious, economical, and sound design and construction of the Project with due consideration to applicable ecological and environmental requirements. The enumeration of specific duties and obligations to be performed by the Engineer hereunder shall not be construed to limit the general undertakings of the Engineer.

Article II

Design of Project

Section 1. The Engineer shall prepare and within _____ days after the approval hereof by the Administrator submit in duplicate to the Owner for approval and to the Administrator for approval, if approval of the Administrator is required, a ''Project Design Manual'' which shall consist of, but not necessarily be limited to, the following items:

(a) A detailed statement covering the procedures to be followed by the Engineer in the performance of this Agreement, including, without limitation, such matters as the routing and distribution of copies of correspondence and reports, the furnishing of lists of plans and specifications, procedures relating to the awarding of construction and equipment contracts, identification of persons to be called by telephone with respect to various subject matters, contract closeouts, and meetings.

(b) A design outline which includes all design criteria for the Project, including, without limitation, plant site, equipment, building requirements, environmental equipment and other environmental factors, civil, electrical, and mechanical requirements. The outline shall comply with the requirements of RUS Environmental Policies and Procedures.

(c) Evaluation studies which support the economic basis for the design and selection of equipment, including, without limitation, turbine throttle and exhaust conditions, boiler feed pump, air quality equipment, and condenser.

(d) Testing procedures which outline the responsibilities to be assumed by the Owner, Engineer, and contractor and include, without limitation, acceptance testing, concrete tests, laboratory testing, radiographic inspection, electrical checkout, and testing.

Section 2. In addition, the Engineer shall prepare and within _____ days after the approval hereof by the Administrator submit in duplicate to the Owner for approval and to the Administrator for approval, if approval of the Administrator is required, preliminary plans (hereinafter called the ''Preliminary Plans'') which shall consist of:

(a) A single-line diagram of proposed main and auxiliary electrical connections, including all major equipment, switching and substations.

(b) A single-line flow diagram of proposed steam, water, gas, oil, and air connections, including all major equipment.

(c) A schedule, in a form acceptable to the Owner and Administrator, showing by months the estimated time required for each major subdivision of the Project for design, fabrication, and installation, and the estimated date the project will be available for commercial service. Such schedule shall specify, in percentages, the portion of the total design performance of the Engineer under this Agreement which each item of design represents.

(d) The Engineer's estimate of the total cost of the completed Project, by components, together with the forecast of the amounts of money needed by the Owner each month until completion of the Project.

Section 3. Promptly upon receipt of approval by the Owner and by the Administrator, if the approval of the Administrator is required, of the Project Design Manual and Preliminary Plans, the Engineer shall proceed with preparation of and shall submit, in duplicate, to the Owner and to the Administrator, if approval of the Administrator is required, complete and detailed plans and specifications, drawings, maps, and other engineering documents required for the construction of the Project (all of the foregoing being hereinafter sometimes collectively called the ''Plans and Specifications''). In the preparation of the Plans and Specifications, the Engineer shall consult with the Owner to the end that the Project shall serve the purposes intended by the Owner. The Engineer shall diligently make such necessary changes in the Plans and Specifications as may be required by the Owner and the Administrator. The Plans and Specifications shall include the following:

(a) Detailed drawings showing the complete design and layout of the Project.

(b) The form of construction contract (hereinafter called the ''Construction Contract'') to be entered into between the Contractor and Owner for the construction of the Project, including forms of notice and instructions to bidders, material and construction specifications, contractor's proposal, bidder's qualifications, contractor's bond, and construction drawings. If the Owner or the Administrator shall direct that the Project shall be constructed under more than one contract, the Engineer shall submit forms of all necessary Construction Contracts and shall also prepare and submit in connection with each such contract all that is hereinabove required of the Engineer in connection with the Construction Contract. All maps, drawings, plans, specifications, estimates, and other documents required to be prepared or submitted by the Engineer under this section or other sections of the Agreement shall conform to applicable environmental requirements related to the project, including those commitments contained in the RUS Final Environmental Statement, standard specifications, and other forms prescribed by the Administrator, unless deviation therefrom shall be permitted by the Administrator in writing.

Section 4. The Engineer shall also proceed to procure and submit to the Owner and to the Administrator, if approval of the Administrator is required, forms of other contracts and documents for the equipment and materials proposed to be purchased by the Owner for use in connection with the construction of the Project or any services necessary or desirable in connection therewith.

Section 5. The Engineer, immediately upon receipt of notice from the Owner and from the Administrator, if approval of the Administrator is required, of their approval for bidding purposes of the form of Construction Contract or any contracts for materials, equipment, and services, as the case may be, shall, unless otherwise instructed by the Owner with the prior approval of the Administrator, take all appropriate and necessary action to procure full, free, and competitive bidding for the award of such contracts. In fulfilling this responsibility, the Engineer shall prepare and submit to the Owner for approval a recommended bidders' list. Upon approval of such list by the Owner, the Engineer, in collaboration with the Owner, shall fix a date for the opening of bids for such contracts. The Engineer shall be available to each prospective bidder for consultation with respect to the details of the Plans and Specifications and all other matters pertaining to the preparation of the Proposals for the construction of the Project or the supply of materials, equipment, or services therefor.

Section 6. The Engineer shall attend all openings of bids for the construction of the Project, or any part thereof, or for the furnishing of materials, equipment, and services therefor. In case fewer than three (3) bids are received for the construction of the Project or component parts of the Project, the Owner shall be notified immediately and such bids shall remain unopened unless permission is obtained from the Owner for the opening of such bids. If bids are opened, the Engineer shall carefully check and prepare tabulations of all bids received and shall render to the Owner all such assistance as shall be required in connection with consideration of the bids so that contracts may be prudently and properly awarded. The Engineer shall submit in writing to the Owner its first, second, and third choice of bidders, materials, and equipment to be used in each case, with its recommendation and reasons for the selection. When the Owner has indicated its choice of bidders, materials, and equipment, the Engineer shall forward a tabulation of the bids, copies of the recommendation, and the Owner's selection to the Administrator, if approval of the Administrator is required. If requested by the Administrator, the Engineer shall forward one complete copy of all original bids received. Upon approval by the Administrator, if approval of the Administrator is required, of the selection of a bidder, materials, and equipment, the Engineer shall prepare three counterparts of the contract to be executed by the Owner and the Contractor and shall forward such executed counterparts to the Administrator for approval, if approval of the Administrator is required.

Section 7. The Engineer shall furnish to the Owner all engineering information, services, data, and drawings required for procuring all necessary or desirable permits, licenses, franchises, titles, rights, and authorizations

and shall cooperate with the Owner's attorney in the procuring thereof.

Article III

Construction Management

Section 1. The Engineer shall supervise the construction of the Project and shall make a diligent effort to ensure the expeditious and economical construction thereof in accordance with the Plans and Specifications and the terms of the Construction Contract and equipment or material contracts and the loan contract (hereinafter called the ''Loan Contract'') entered into between the Owner and the Government or any other lenders specifying the terms upon which the Project shall be constructed and financed. The Engineer shall carefully inspect all materials and equipment prior to their incorporation in the Project and shall promptly reject those not in compliance with the Specifications. The Engineer shall also supervise and inspect the incorporation of the materials in the Project and the workmanship with which such materials are incorporated. The Engineer, as representative of the Owner, shall have sole responsibility for requiring the Contractor to perform the Construction Contract in accordance with its terms and the Plans and Specifications, and, in performing the duties incident to such responsibility, the Engineer shall issue to the Contractor such directives and impose such restrictions as may be required to obtain reasonable and proper compliance by the Contractor with the terms of the Construction Contract and the Plans and Specifications in the construction of the Project; provided that the Engineer shall not be required to exercise any actual control over employees of the Contractor. The term ''supervise'' when used herein shall not confer upon the Engineer responsibility for the Contractor's construction means, methods, or techniques. The obligations of the Engineer hereunder run to and are for the benefit of only the Owner and the Administrator.

Section 2. If, after the Construction Contract has been approved by the Administrator, if approval of the Administrator is required, it shall be determined that any change or changes in the Plans and Specifications are advisable, the Engineer shall prepare and submit to the Owner and the Contractor all necessary details in connection with such change or changes. The execution of such changes by the Engineer shall be within the intent of the Engineer's general undertakings as outlined elsewhere in this contract. Upon approval of the change or changes by the Owner and the Contractor, the proposed change or changes shall be submitted by the Engineer to the Administrator, if approval of the Administrator is required, in the form of a contract amendment.

Section 3. The Engineer shall prepare all estimates, certificates, reports, and other documents required to be executed by the Engineer pursuant to the terms of the Construction Contract, equipment or material contracts, or the Loan Contract. When any bid specification is forwarded to RUS for review, an updated cost estimate for the proposed contract shall also be included. After all major equipment contracts have been awarded and all permits have been received, and after approximately forty percent (40%) of the project design has been completed and construction has commenced, the Engineer shall update, on a quarterly basis, unless more frequently requested by the Owner, the information required under Article II, Section 2(d) hereof.

Section 4. The Engineer shall, upon completion of construction of component parts of the Project, make a complete inspection and conduct, utilizing the Owner's operating personnel and/or the manufacturer's representatives, such component and system tests as shall be necessary to assure conformance with the Plans and Specifications, the standards required by the Construction Contract, equipment and materials contracts, and the guarantees given in connection therewith.

Section 5. The Engineer shall schedule and coordinate the start-up activities for placing the plant in service. This shall include preparation of system operating schedules, written system start-up procedures, and operating manuals describing the various plant systems and operating procedures.

Section 6. The Engineer shall prepare written procedures for final acceptance tests of major equipment, such procedures being subject to the Owner's concurrence. Furthermore, the Engineer shall conduct, utilizing the Owner's operating personnel, final acceptance tests of major equipment. Such tests shall be made in the presence of duly qualified representatives of the Owner and the Administrator, if the Administrator elects to attend, and the time and procedure of such tests shall be agreed upon by the Engineer, the Owner, and the Administrator. After completion of each final acceptance test, the Engineer shall prepare copies of the test results and recommendations as to acceptability of equipment and submit them to the Owner for review.

Section 7. A competent resident engineer with full authority to act for the Engineer shall be maintained by the Engineer at the site of the Project during the entire period of any construction activity. The Engineer shall maintain at the site of the Project and under the direct supervision of the resident engineer a sufficient number of qualified engineering field inspectors to fully discharge the responsibilities of the Engineer pursuant to Article III, Section 1 hereof.

Article IV

Final Documents

The Engineer shall, upon the completion of the inspection and tests in respect of the Project provided in Sections 4 and 6 of Article III, obtain or prepare and deliver to the Owner the following:

(a) A nameplate inventory and summary in triplicate of all equipment and facilities incorporated in the Project together with a breakdown of contract costs arranged by Standard List of Retirement Units, RUS Bulletin 181–2.

(b) Two complete sets of final inventory (record) drawings showing the location and layout of the Project in accordance with revisions to design drawings and field records of construction. All information required by this Agreement to be included in the maps and drawings shall be included in the record drawings. One complete set of the record drawings shall be in reproducible form satisfactory to the Owner. The Engineer shall also provide the Owner with any other original manufacturer's equipment drawings not otherwise available to the Owner.

(c) An itemized statement in triplicate of the amounts payable by the Owner under all contracts for the construction of the Project and the furnishing of materials, equipment, and services thereof.

(d) A certificate in triplicate to the effect that the Project has been fully constructed substantially in accordance with the Plans and Specifications if and as amended.

(e) A detailed report in duplicate of all tests, in a form satisfactory to the Owner.

(f) All maps, tracings, and drawings prepared or used by the Engineer in connection with the performance of the duties of the Engineer under this Agreement.

(g) Operating and maintenance manuals received from manufacturers.

When the Owner has determined that the Project is available for commercial service, the Engineer shall report to the Owner and the Administrator, for depreciation purposes, the estimated total contract cost of the Project, plus the Owner's other related overhead cost, as obtained from the Owner, showing as a separate item the cost of land (a non-depreciable item).

Article V

Compensation

Section 1. The Owner shall pay the Engineer for the services performed hereunder as indicated in the attached Schedule A.

Section 2. The total compensation to be paid in connection with this Agreement shall not exceed $_____ (_____ Dollars.)

Section 3. The Engineer shall submit to the Owner each month a certified statement in duplicate of the amounts due for services hereunder, which statement shall be in accordance with the applicable reports of engineering progress required by Article VI, Section 1 hereof, and shall be in such detail and contain such supporting data as the Owner may request. The Owner shall review and approve each statement within thirty (30) days or inform the Engineer of the reasons the statement cannot be approved. Upon approval of each such statement by the Owner, ninety (90) percent of the amount thereof shall be due and payable. The balance of the compensation payable under Section 1 hereof shall be due and payable within thirty (30) days after completion of the Project. The Project shall be deemed complete for the purposes of the Agreement when all required final documents, including a certificate of completion, have been submitted by the Engineer and approved by the Owner and by the Administrator, if approval of the Administrator is required.

Section 4. In the event that this Agreement at any time be terminated pursuant to Article VI, Section 2 hereof, the compensation which shall be payable by the Owner to the Engineer for services rendered prior to such termination shall be computed as follows:

(a) Compensation for services in respect of the Design of the Project shall be determined

in accordance with Section 1 of this Article V, using the final report of engineering progress referred to in Article VI, Section 1 hereof to determine the percentage of completion of the services in respect of design of the Project as of the effective date of termination.

(b) Compensation for services in respect of supervision and inspection of construction of the Project and all other services shall be computed at the rate of $_____ per staff hour of supervision and inspection of construction performed by the Engineer prior to the effective date of termination, but in no event shall such compensation exceed an amount computed in accordance with the provisions of Section 1 of this Article V. The Engineer shall submit to the Owner, in duplicate, a statement of the staff hours of supervision and inspection of construction in such detail and with such supporting data as may be requested by the Owner.

Section 5. Compensation payable to the Engineer under any of the Articles of this Agreement shall be in addition to taxes or levies (excluding Federal, State, and Local Income Taxes) which may be assessed against the Engineer by any State or political subdivision directly on services performed or payments for services performed by the Engineer pursuant to this Agreement. Such taxes or levies which the Engineer may be required to collect or pay, shall, in turn, be added by the Engineer to invoices submitted to the Owner pursuant to this Agreement.

Section 6. At or prior to the time when any payments shall be made to the Engineer pursuant to this Agreement, the Engineer if requested by the Owner shall furnish to the Owner, as a condition precedent to such payment, a certificate to the effect that all salaries or wages earned by the employees of the Engineer in connection with the Project have been fully paid by the Engineer up to and including a date not more than fifteen (15) days prior to the date when such payment shall be made. At or before the time when the final payment provided to be made hereunder shall be made to the Engineer by the Owner, the Engineer shall also furnish to the Owner, as a condition precedent to such payment, a certificate in form satisfactory to the Administrator that all the employees of the Engineer have been paid for services rendered by them in connection with the Project and that all other obligations which might become a lien on the Project have been paid.

Section 7. Interest at the rate of _____ percent (_____ %) per annum [percentage is not to exceed any applicable State usury laws] shall be paid by the Owner to the Engineer on all unpaid balances due the Engineer, commencing thirty (30) days after the due date, provided that the delay in payment beyond the due date shall not have been caused by any condition within the control of the Engineer. Such compensation shall be paid ten (10) days after the amount of the interest has been determined by the Engineer and the Owner.

Article VI

Miscellaneous

Section 1. The Engineer shall prepare and execute in such form and detail as the Owner and the Administrator shall direct all estimates, certificates, reports, and other documents required to be executed by the Engineer pursuant to the Construction Contract or the Loan Contract, including, without limitation, a monthly report of engineering progress on the form of schedule referred to in Article II, Section 2(c) hereof, showing the percentage of completion of each of the subdivisions thereof and the overall percentage of completion of engineering services in respect of the design and construction of the Project as of the date of each such report; Monthly Cost Estimates and Forecasts of Cash Requirements in the form referred to in Article II, Section 2(d) hereof, which shall contain explanations of changes, if any, from prior Monthly Cost Estimates and Forecasts of Cash Requirements. From time to time the Engineer shall prepare and submit to the Owner for approval and to the Administrator for approval, if approval of the Administrator is required, all necessary changes in the schedule referred to in Article II, Section 2(c) hereof; provided, however, that no changes shall be made in the percentages assigned to each item of design in the original schedule approved by the Owner and by the Administrator, if approval of the Administrator is required, pursuant to Article II, Section 2(c) hereof.

Section 2. The Owner may at any time terminate this Agreement by giving notice to the Engineer in writing to that effect, delivered or mailed to the Engineer's last known address not less than twelve (12) calendar days prior to the effective date of termination specified in the notice. From and after the effective date specified in such notice, this Agreement shall be terminated, except that the Engineer shall be entitled to receive compensation for services hereunder as provided in Section 3 of Article V hereof, and the Engineer shall be obligated forthwith to deliver to the Owner all maps, tracings, and drawings of the Project and all other letters, documents, and other material including all records pertaining thereto. If this Agreement shall be terminated, the Engineer shall prepare and submit to the Owner and the Administrator a final report of engineering progress as of the date of termination.

Section 3. Insurance. The Engineer shall take out and maintain throughout the period of this Agreement insurance of the following types and minimum amounts:

(a) Workers' compensation and employers' liability insurance, as required by law, covering all of the Engineer's employees who perform any of the obligations of the Engineer under the Agreement. If any employer or employee is not subject to the workers' compensation laws of the governing State, then insurance shall be obtained voluntarily to extend to the employer and employee coverage to the same extent as though the employer or employee were subject to the workers' compensation laws.

(b) Public liability insurance covering all operations under the Agreement shall have limits for bodily injury or death of not less than $1 million each occurrence, limits for property damage of not less than $1 million each occurrence, and $1 million aggregate for accidents during the policy period. A single limit of $1 million of bodily injury and property damage is acceptable. This required insurance may be in a policy or policies of insurance, primary and excess including the umbrella or catastrophe form.

(c) Automobile liability insurance on all motor vehicles used in connection with the Agreement, whether owned, nonowned, or hired, shall have limits for bodily injury or death of not less than $1 million per person and $1 million per occurrence, and property damage limits of $1 million for each occurrence. This required insurance may be in a policy or policies of insurance, primary and excess including the umbrella or catastrophe form.

(d) Errors and Omissions (Professional Liability) Insurance in an amount at least as large as the maximum compensation specified in Article V, Section 2, but not less than $500,000.

The Owner shall have the right at any time to require public liability insurance and property damage liability insurance greater than those required in subsections ''b'' and ''c'' of this Section. In any such event, the additional premium or premiums payable solely as the result of such additional insurance shall be added to the total compensation to be paid under this Agreement.

The Owner shall be named as Additional Insured on all policies of insurance required in subsections ''b'' and ''c'' of this Section.

The policies of insurance shall be in such form and issued by such insurer as shall be satisfactory to the Owner. The Engineer shall furnish the Owner a certificate evidencing compliance with the foregoing requirements which shall provide not less than thirty (30) days prior written notice to the Owner of any cancellation or material change in the insurance.

The Engineer shall also follow the requirements of 7 CFR part 1788, RUS Fidelity and Insurance Requirements for Electric and Telephone Borrowers.

Section 4. The obligations and duties to be performed by the Engineer under this Agreement shall be performed by persons qualified to perform such duties efficiently. The Engineer, if the Owner shall so direct in writing, shall replace any resident engineer or other persons employed by the Engineer in connection with the Project. For the information of the Owner and the Administrator, the Engineer shall file with the Owner and the Administrator a statement, signed by the Engineer, of the qualifications, including specific experience of each engineer and inspector assigned to the Project and the duties assigned to each.

Section 5. Approvals, directions, and notices provided to be given hereunder by the Administrator to the Engineer or the Owner shall be deemed to be properly given if given by the Administrator or by any person authorized by the Administrator to give such approvals, directions, or notices.

Section 6. The Engineer shall follow all applicable RUS rules and regulations.

Section 7. This Agreement may be simultaneously executed and delivered in three or more counterparts, each of which so executed and delivered shall be deemed to be

an original, and all constitute but one and the same instrument.

Section 8. The obligations of the Engineer under this Agreement shall be assigned without the approval in writing of the Owner and of the Administrator.

Section 9. This Agreement shall be effective only from and after the time when it shall be approved by the Administrator in writing. Neither this Agreement nor any provision thereof shall be modified, amended, rescinded, waived, or terminated without the approval of the Administrator.

Section 10. The Engineer shall comply with applicable statutes pertaining to engineering and warrants that _____ (Name of Engineer) who will be in responsible charge of the Project possesses license number _____ issued by the State of _____ on the _____ day of _____, _____.

In witness whereof, the parties hereto have caused this Agreement to be duly executed.

_____ Owner

By _____ President

ATTEST: _____ Secretary

_____ Engineer

_____ President, Partner [Strike out inapplicable designation.]

ATTEST: _____ Secretary

Schedule A—Compensation

[End of clause]

§ 1724.75 Architectural service contract, RUS Form 220.

The contract form in this section shall be used when required by this part.

ARCHITECTURAL SERVICES CONTRACT

AGREEMENT, made _____, _____, between _____ (hereinafter called the ''Owner'') and _____ of _____ (hereinafter called the ''Architect'').

Whereas, the Owner owns and operates a rural electric or telecommunications system, having the Rural Utilities Service designation of _____, financed in whole or in part with loans made or guaranteed by the United States of America acting through the Administrator of the Rural Utilities Service (hereinafter called the ''Administrator''). If the project is financed wholly or in part by the Rural Telephone Bank, an agency of the United States of America, the references in this Agreement to the ''Administrator'' shall mean the ''Governor'' of the Rural Telephone Bank as well; and

Whereas, the Owner desires to _____ (hereinafter called the ''Project'') at an estimated cost of construction not to exceed: _____ dollars ($_____) for new work, and/or _____ dollars ($_____) for remodeling, which aggregate _____ dollars ($_____), hereinafter called the ''Anticipated Cost,'' is exclusive of the cost of land, legal, architectural, accounting, or other professional services, or of interest.

Now, therefore, in consideration of the mutual undertakings herein contained, the parties hereto agree as follows:

Article I

General Obligation of Architect

The Architect shall render, diligently and competently in accordance with the normal standards used in the profession, all architectural services which shall be necessary or advisable for the expeditious, economical, and sound design, construction, and satisfactory completion of the Project. The enumeration of specific duties and obligations to be performed by the Architect hereunder shall not be construed to limit the general undertakings of the Architect. The obligations of the Architect hereunder run to, and are for the benefit of, only the Owner and the Administrator and shall not relieve the Contractor of its own responsibility under its agreement with the Owner.

Article II

Preconstruction Period

Section 1.

(a) The Architect shall prepare: (1) preliminary drawings, (2) a general description of materials and types of construction, and (3) an overall estimate of the cost of construction (all of the foregoing hereinafter collectively called the ''Preliminary Documents''), and not later than _____ days after the date of execution of this Agreement, shall submit them in triplicate to the Owner for approval. Any changes in the Preliminary Documents required as a condition of approval shall be promptly made by the Architect.

(b) After receipt of notice of approval of the Preliminary Documents from the Owner, the Architect will proceed with the preparation of:

(1) Detailed plans showing the complete design of the Project including, but not limited to, architectural, structural, electrical, mechanical, and site development features.

(2) Complete and detailed specifications describing the design requirements of the Project, including all matters referred to in subparagraph (1) above, and any materials to be incorporated therein.

(3) The Construction Contract, RUS Form 257, ''Contract to Construct Buildings,'' (hereinafter called the ''Construction Contract''), which includes the Notice and Instructions to Bidders, Bid Bond, Bidders' Proposal, Owners' Acceptance, and Contractors' Bond, to be entered into between a bidder and the Owner for the construction of the Project. (All of the foregoing, including any revisions thereof, being hereinafter collectively called the ''Plans and Specifications.'')

Within _____ days after receipt of such approval of the Preliminary Documents, the Architect shall prepare and submit to the Owner, in duplicate, for its approval, complete and detailed ''Final'' Plans and Specifications as required for the construction of the Project. All documents required to be prepared and submitted by the Architect hereunder shall be on the applicable standard forms prescribed by the Administrator. In the preparation of the Plans and Specifications, the Architect shall consult with the Owner to ascertain the requirements of the project. Upon approval by the Owner of the Plans and Specifications, such approval being noted thereon under the corporate seal of the Owner attesting the approval thereof by the Owner, the Architect shall diligently make such changes in the Plans and Specifications as may be required as a condition of approval thereof.

Section 2. So far as it shall be necessary in the preparation of the Plans and Specifications and in the construction of the Project, the Owner shall furnish the Architect information and data in respect of the following:

(a) A complete and accurate survey of the building site, including grades and lines of streets, pavements, and adjoining properties;

(b) The rights, restrictions, easements, boundaries, and contours of the building site;

(c) Sewer, water, gas, electric, and telephone service, etc.; and

(d) Test borings and pits, and chemical, mechanical, and other tests.

Section 3. If the Owner shall direct that the Project shall be constructed under more than one contract, the Architect shall submit all necessary Construction Contract forms and shall also prepare and submit in connection with each such contract all of the information and documents that shall be required for construction of the Project.

Section 4. Immediately after the Architect has received approval of the Plans and Specifications from the Owner, the Architect, unless otherwise instructed by the Owner, shall take all appropriate and necessary action to procure full, free, and competitive bidding for the award of the Construction Contract. Any public notices which by law are required of the Owner shall be published at the expense of the Owner.

Section 5. The Architect shall prepare and furnish to each qualified bidder requesting them one set of the Plans and Specifications together with all necessary forms and other documents upon payment of the amount stipulated by the Architect, which payment will be refunded to each bona fide bidder within ten (10) days after the bid opening. The Architect shall also prepare and furnish to bidders requesting them additional sets of the Plans and Specifications together with all necessary forms and other documents upon payment of an amount stipulated by the Architect, which payment will not be subject to refund.

Section 6. The Architect shall address to each prospective bidder a written response to inquiries from any prospective bidder with respect to the details of the Plans and Specifications and all other matters pertaining to the preparation of proposals for the construction of the Project or the furnishing of materials or services therefor. Under some circumstances the Architect may request that the inquiries from the prospective bidders be submitted in writing. The Architect or a competent representative of the Architect shall attend all openings of bids for the construction of the Project or any part thereof. In case fewer than three (3) bids are received for the construction of the Project or component parts of the Project, the Owner shall be notified immediately and such bids shall remain unopened unless permission is obtained from the Owner for the opening of such bids. If bids are opened, the Architect shall carefully check and

prepare tabulations of all bids received and shall render to the Owner a recommendation and all such assistance as shall be required in connection with consideration of the bids received so that contracts may be prudently awarded in accordance with the policy and procedure prescribed by the Owner and the Administrator.

Section 7. The Architect shall furnish to the Owner all architectural information, data, and drawings required for procuring all necessary or desirable permits, licenses, franchises, and authorizations, and shall cooperate with the Owner's attorney in the procuring thereof.

Section 8. If, after the Construction Contract has been approved, it shall be determined by the Owner that a change or changes in the Plans and Specifications are advisable, the Architect shall prepare and submit to the Owner all necessary details in connection with such change or changes, the Construction Contract shall be amended accordingly, and the Architect shall immediately proceed in respect of any construction required thereby in like manner as though such construction were originally required under the Construction Contract.

Article III

Construction Period

Section 1. The Architect shall conduct inspection activities, and for projects involving multiple construction contracts, shall provide project coordination and inspection activities, and shall make a diligent effort to secure for the Owner the expeditious and economical construction of the Project in accordance with the approved Plans and Specifications and the terms of the Construction Contract. The Architect, unless otherwise directed in writing by the Owner, shall have and exercise sole responsibility for the issuance of supplemental directives to the Contractor regarding the Contractor's performance in accordance with the terms of the Construction Contract. In fulfilling the above responsibility, the Architect shall:

(a) Issue to the Contractor such directives and impose such restrictions as may be necessary to obtain reasonable and proper compliance by the Contractor with the terms of the Construction Contract and the Plans and Specifications.

(b) Visit the Project site at intervals appropriate to the stage of construction, but in no event (except for periods of prolonged work stoppage or construction delay) less than once per week, to inspect construction of the Project, to inspect excavations prior to placing of concrete, and to inspect other work prior to it being covered from view.

(c) Make recommendations to the Owner concerning the selection of materials, colors, finishes, designs, or devices for use in the Project.

(d) Periodically inspect materials prior to their incorporation into the Project and promptly reject those not in compliance with the Specifications.

(e) Observe the manner of incorporation of materials into the Project and the workmanship with which such materials are incorporated.

(f) Review and if acceptable approve material and/or equipment substitutions for compliance with contract documents.

(g) Observe results of specified tests.

(h) Be available to the Owner and the Contractor during office hours for consultation.

(i) Review completed construction, direct the Contractor to correct observed defects, and approve payments to the Contractor for correctly completed construction.

(j) Prepare such change orders as may be required for the Project.

Section 2. The Architect shall review and, if acceptable, approve shop drawings, samples, schedules, and other submissions of the Contractor for conformance with the design concept of the Project and for compliance with requirements of the Plans and Specifications.

Section 3. The Architect shall prepare and execute all estimates, certificates, and other documents required to be executed by the Architect pursuant to the Construction Contract. Unless otherwise provided in the Construction Contract, the Architect will furnish to the Contractor, free of charge, copies of the Plans and Specifications as may be reasonably necessary for the execution of the work.

Section 4. The Architect shall prepare and submit to the Owner monthly construction progress reports.

Section 5. The Architect shall, upon notice by the Contractor of completion of the work and a request for a final inspection of the Project:

(a) Make a careful and thorough inspection to determine that the construction of the Project has been completed in accordance with the Plans and Specifications and the terms of the Construction Contract and any amendments thereto.

(b) Prepare and deliver to the Owner complete and detailed final documents, including, without limitation, the following:

(1) An itemized statement of the amounts payable by the Owner under all contracts for the construction of the Project and the furnishing of materials and services therefor.

(2) A Certificate of Completion on the form approved by the Administrator, to the effect that the Project has been fully constructed in accordance with the Plans and Specifications, if and as amended.

(3) One complete set of ''as-constructed'' Plans and Specifications of the Project in reproducible form satisfactory to the Owner.

(4) A Certificate of Architect and a Final Statement of Architect's Fee due hereunder.

(c) Use diligent efforts:

(1) To obtain from the Contractor releases of all liens and of rights to claim any lien from manufacturers, material suppliers, and subcontractors that have furnished materials or services for the construction of the Project.

(2) To obtain a Certificate of Contractor, on the form approved by the Administrator, to the effect that all labor has been paid.

(3) To obtain and deliver to the Owner all material and workmanship warranties or bonds required by the Plans and Specifications and service and operating manuals furnished by manufacturers or suppliers.

Article IV

Compensation

Section 1. The Owner shall pay the Architect for all services performed hereunder, except as provided in Section 3 hereof, a sum calculated as follows. (The Owner and Architect should agree upon the compensation schedule to be inserted in Tables Nos. 1 and 2 below.)

Table No. 1

NEW CONSTRUCTION
COST OF NEW CONSTRUCTION _____
COMPENSATION FOR ARCHITECTURAL SERVICES _____
TABLE NO. 2
REMODELING WORK
COST OF REMODELING WORK _____
COMPENSATION FOR ARCHITECTURAL SERVICES

If a Project shall consist of new construction and remodeling work, the Architect and the Owner shall agree on an equitable distribution of the final cost of construction between new construction and remodeling work, which shall be used to determine the applicable compensation from the two tables in this Section 1. For the purpose of computing compensation due the Architect under this Agreement for services rendered, ''remodeling,'' shall be defined for this project as follows: _____

The sum shall be due and payable as follows:

(a) Twenty percent (20%) thereof (using the Anticipated Cost in lieu of the Cost of Construction) within thirty (30) days after the date of approval of the Preliminary Documents.

(b) An additional fifty percent (50%) thereof (using the Anticipated Cost in lieu of the Cost of Construction) within thirty (30) days after the date of approval of the Plans and Specifications.

(c) An additional twenty percent (20%) thereof, as construction progresses, in monthly installments each bearing the same ratio to the total amount payable under this subsection (c) as the corresponding monthly payment to the Contractor bears to the total amount payable to the Contractor.

(d) The balance, if any, of the compensation due under this Section 1 and all other provisions of this Agreement, shall be payable within thirty (30) days after Completion of the Project in accordance with the provisions of Section 2 of this Article IV.

For the purpose of this Article, the term ''Cost of Construction of the Project,'' shall mean the Construction Contract Price including amendments thereto, plus the cost of labor and materials furnished for the Project by the Owner and in respect of which the Architect shall have rendered services hereunder. Extra drafting or other services performed shall be paid for as provided in Section 3 of this Article IV.

The term ''Completion of the Project'' shall mean full performance of all obligations under this Agreement and all amendments and revisions thereof.

Section 2. Prior to the time when any payment shall be made to the Architect pursuant to this Agreement, the Architect, if requested by the Owner, shall furnish to the Owner, as a condition precedent to such payment, a certificate to the effect that all salaries or wages earned by the employees of the Architect in connection with the Project have been fully paid by the Architect up to

and including a date not more than fifteen (15) days prior to the date when such payment shall be due. Before the time when the final payment provided to be made pursuant to this Article IV shall be made to the Architect by the Owner, the Architect shall also furnish to the Owner as a condition precedent to such payment (a) a Certificate of Architect stating that all the employees of the Architect have been paid for services rendered by them in connection with the Project and that all other obligations which might become a lien upon the Project have been paid, and (b) a Final Statement of Architect's Fee showing the Cost of Construction of the Project and the amount due the Architect under this Agreement.

Section 3. If the Architect shall, at the request of the Owner, perform any of the services outlined in Section 2 of Article II or if, after approval of the Construction Contract the Architect shall perform extra drafting or other services because of changes ordered by the Owner or default of the Contractor, the Architect shall be paid, in respect thereof, a sum equal to the Architect's reasonable out-of-pocket expenses, plus _____ percent (____%) (not to exceed fifty percent (50%)) thereof for office overhead plus reasonable subsistence, transportation, and communication expenses, if any, paid to, or on behalf of, employees; which amount shall be due and payable ten (10) days after approval by the Owner of the services performed and the invoice of the Architect. The compensation due the Architect under this paragraph shall be decreased by the amount of any increase in the compensation due the Architect under Section 1 of this Article IV. The Architect shall submit to the Owner a statement of out-of-pocket expenses in respect of extra drafting or other services to be compensated for pursuant to this Section 3. Out-of-pocket expenses shall be limited to money paid by the Architect for direct labor, labor taxes, labor insurance, prorated sick leave, vacation, holiday, retirement, and medical insurance benefits, all applicable to such direct labor, except that, in the case of services performed with the prior approval of the Owner by the following officers, partners, or others having ownership interests in the Architect, the rates corresponding to ''direct labor'' set forth below shall apply: _____.

Section 4. If this Agreement shall be terminated pursuant to the provisions of Section 1 or Section 2 of Article V hereof, the compensation for services rendered prior to such termination shall be computed as follows:

(a) One-fifth of the compensation set forth in Section 1 of this Article IV based upon the Anticipated Cost (or of the Cost of Construction of the Project if termination is effective after approval of the Construction Contract) shall represent compensation for the Preliminary Documents and such compensation shall be prorated on the basis of the percentage of completion of such Preliminary Documents as of the effective date of termination.

(b) One-half of the compensation set forth in Section 1 of this Article IV based upon the Anticipated Cost (or of the Cost of Construction of the Project if termination is effective after approval of the Construction Contract) shall represent compensation for the Plans and Specifications and such compensation shall be prorated on the basis of the percentage of completion of such Plans and Specifications as of the effective date of termination.

(c) One-fifth of the compensation set forth in Section 1 of this Article IV based upon the Anticipated Cost shall represent compensation for the coordination and inspection of construction of the Project and such compensation shall be prorated on the basis of the percentage of such services determined by the value of the Project constructed prior to the effective date of termination.

(d) One-tenth of the compensation set forth in Section 1 of this Article IV based upon the Cost of Construction of the Project shall represent compensation for the services provided for in Section 5 of Article III and such compensation shall be prorated on the basis of the percentage of such services performed prior to the effective date of termination.

(e) Compensation for the services referred to in Section 2 of Article II, which may be performed by the Architect at the request of the Owner and for extra drafting and other services because of changes ordered by the Owner, shall be computed in accordance with the provisions of Section 3 of this Article IV.

Section 5. Interest shall be paid by the Owner to the Architect on all unpaid balances due the architect, commencing thirty (30) days after the due date, provided that the delay in payment beyond the due date shall not have been caused by any condition within the control of the Architect. Such interest shall be at the rate of ____ percent (____%). [Percentage is not to exceed any applicable State usury laws.] Such compensation shall be paid ten (10) days after the amount of the interest has been determined by the Architect and the Owner.

Article V

Miscellaneous

Section 1. The Owner may at any time terminate this Agreement by giving notice to the Architect in writing to that effect, delivered and mailed to the Architect's last known address not less than ten (10) days prior to the effective date of termination specified in the notice. From and after the effective date of termination specified in such notice, this Agreement shall be terminated, provided, however, that the Architect shall be entitled to receive compensation for services theretofore rendered pursuant to this Agreement, computed in accordance with the provisions of Article IV, Section 4, hereof.

Section 2. The Architect shall have the right, by giving to the Owner not less than thirty (30) days notice in writing, to terminate this Agreement if the Architect shall have been prevented by conditions beyond the control and without the fault of the Architect (a) from commencing performance of this Agreement for a period of twelve (12) months from the date of this Agreement, or (b) from proceeding with the completion of full performance of any remaining services required of the Architect pursuant to this Agreement for a period of six (6) months from the date of last performance by the Architect of other services required pursuant to this Agreement. From and after the effective date specified in such notice this Agreement shall be terminated, except that the Architect shall be entitled to receive compensation for services performed hereunder, computed and payable in the same manner as set forth in Section 1 of this Article.

Section 3. Upon Completion of the Project or termination of this Agreement, the Architect shall be obligated forthwith to deliver to the Owner all maps, tracings, and drawings of the Project and all letters, documents, and other material including all records pertaining thereto.

Section 4. Insurance. The Architect shall take out and maintain throughout the period of this Agreement insurance of the following types and minimum amounts:

(a) Workers' compensation and employers' liability insurance, as required by law, covering all of the Architect's employees who perform any of the obligations of the Architect under the Agreement. If any employer or employee is not subject to the workers' compensation laws of the governing State, then insurance shall be obtained voluntarily to extend to the employer and employee coverage to the same extent as though the employer or employee were subject to the workers' compensation laws.

(b) Public liability insurance covering all operations under the Agreement shall have limits for bodily injury or death of not less than $1 million each occurrence, limits for property damage of not less than $1 million each occurrence, and $1 million aggregate for accidents during the policy period. A single limit of $1 million of bodily injury and property damage is acceptable. This required insurance may be in a policy or policies of insurance, primary and excess including the umbrella or catastrophe form.

(c) Automobile liability insurance on all motor vehicles used in connection with the Agreement, whether owned, nonowned, or hired, shall have limits for bodily injury or death of not less than $1 million per person and $1 million per occurrence, and property damage limits of $1 million for each occurrence. This required insurance may be in a policy or policies of insurance, primary and excess including the umbrella or catastrophe form.

(d) Errors and Omissions (Professional Liability) Insurance in an amount at least as large as the maximum compensation specified in Article IV, Section 1, but not less than $500,000.

The Owner shall have the right at any time to require public liability insurance and property damage liability insurance greater than those required in subsections ''b'' and ''c'' of this Section. In any such event, the additional premium or premiums payable solely as the result of such additional insurance shall be added to the total compensation to be paid under this Agreement.

The Owner shall be named as Additional Insured on all policies of insurance required in subsections ''b'' and ''c'' of this Section.

The policies of insurance shall be in such form and issued by such insurer as shall be satisfactory to the Owner. The Architect shall furnish the Owner a certificate evidencing compliance with the foregoing requirements which shall provide not less than thirty (30) days prior written notice to the Owner of any cancellation or material change in the insurance.

The Architect shall also follow the requirements of 7 CFR part 1788, RUS Fidelity and Insurance Requirements for Electric and Telephone Borrowers.

Section 5. The obligations and duties to be performed by the Architect under this Agreement shall be performed by persons qualified to perform such duties efficiently. The Architect, if the Owner shall so direct, shall replace any person employed by the Architect in connection with the Project.

For the information of the Owner and the Administrator, the Architect shall, upon request, file with the Owner and the Administrator, on forms approved by the Administrator, statements of the qualifications, including specific experience, of each person assigned to the Project and the duties assigned to each, and certifications of insurance coverage.

Section 6. The Architect shall follow all applicable RUS rules and regulations.

Section 7. This Agreement shall be simultaneously executed and delivered in three counterparts, each of which when so executed and delivered shall be deemed to be an original, and all shall constitute but one and the same instrument.

Section 8. The obligations of the Architect under this Agreement shall not be assigned without the approval in writing of the Owner.

Section 9. The Architect shall comply with applicable statutes pertaining to the practice of the profession. It is hereby warranted that the Architect possesses license number _____ issued by the State of _____ on the _____ day of _____, _____.

In Witness Whereof, the parties hereto have caused this Agreement to be duly executed and their respective corporate seals to be affixed and attested by their duly authorized representatives all as of the date first above written.

_____ Owner

By _____ President

ATTEST: _____ Secretary

_____ Architect

By _____

_____ Title

ATTEST: _____ Secretary

[End of clause]

§ 1724.76 Engineering service contract—electric system design and construction, RUS Form 236.

The contract form in this section shall be used when required by this part.

ENGINEERING SERVICE CONTRACT

ELECTRIC SYSTEM DESIGN AND CONSTRUCTION

AGREEMENT made _____, 19 ____, between _____ (hereinafter called the ''Owner''), and _____ of _____ (hereinafter called the ''Engineer'').

Whereas, the Owner has obtained loans made or guaranteed by the United States of America, acting through the Administrator of the Rural Utilities Service (hereinafter called the ''Administrator''), to finance in whole or in part a rural electric system pursuant to the Rural Electrification Act of 1936, as amended, and plans the construction of a project designated _____, being hereinafter called the ''Project,'' consisting of approximately the following facilities:

Distribution and Transmission Lines:

_____ miles (_____ km) of _____ kV line,

_____ miles (_____ km) of _____ kV line,

_____

Substations:

Name _____ _____ MVA _____ kV to _____ kV

_____ _____ MVA _____ kV to _____ kV

Switching Stations:

Name _____ _____ kV

Name _____ _____ kV

Other:

_____ miles (_____ km) of line conversion, _____ miles (_____ km) of line removal, and the following:

_____

Now, therefore, in consideration of the mutual undertakings herein contained, the parties hereto agree as follows:

Article I

General Obligations

In accordance with the normal standards and practices used in the profession, the Engineer shall render diligently and competently all engineering services which shall be necessary or advisable for the expeditious, economical, and sound design and construction of the Project, with due consideration given to applicable ecological and environmental requirements. The enumeration of specific duties and obligations to be performed by the Engineer hereunder shall not be construed to limit the general undertakings of the Engineer.

Article II

Preconstruction Period

Section 1. The Engineer shall give thorough consideration to aesthetics and the protection of the environment in all phases of construction of the Project, including line routing and station locations. Where RUS or the Owner has prepared an environmental document or the Owner must comply with the conditions of a Special Use Permit imposed by a Federal land management agency, the Engineer shall incorporate all environmental commitments of the applicable documents that specifically relate to the facilities to be constructed.

Section 2. The Engineer shall, within thirty (30) days after the date of execution of this Agreement, make a complete field inspection and investigation for the purpose of determining the most economical and practicable location of the proposed lines.

The Engineer shall cooperate with the Owner's right-of-way agent and attorney in developing a schedule of right-of-way procurement and assist the Owner in developing suitable property maps for use by the Owner's easement solicitors.

Section 3. Prior to the preparation of Plans and Specifications by the Engineer, the Owner shall furnish to the Engineer the following as may be applicable:

(a) Copies of pertinent Engineering Studies, including Construction Work Plans when available, on which to base the design of the electrical facilities to be built; key maps of the Owner's present and proposed facilities and detail or vicinity maps showing location of existing lines, consumers served, and easements obtained.

(b) Detailed lists of materials, if any, on hand or on order which are to be furnished by the Owner in the construction of the Project, together with the quantity and the value of each item of such material.

(c) With respect to materials contained in the assembly units indicated for removal, a list showing values of individual material items for which the Contractor will be credited with respect to salvaged materials returned to the Owner if not included in item (b) above.

Section 4. Sufficient soil test data to ensure adequate foundation designs shall be provided by the _____ Owner _____ the Engineer [check one].

Section 5. If requested by the Owner, the Engineer shall prepare and submit to the Owner estimates of quantities of materials to be furnished by the Owner for use in connection with the construction of the Project. The Engineer shall procure and submit to the Owner forms of contracts and other documents for such materials and for such other services as may be necessary or desirable in connection with the construction of the Project.

Section 6. For transmission lines, the Engineer shall prepare and submit to the Owner for approval and to the Administrator for approval, if approval of the Administrator is required, a summary of transmission line and substation design data with supporting calculations. The Plans and Specifications and the Plan and Profile, if any, shall be based on the design data approved by the Owner and by the Administrator, if approval of the Administrator is required.

Section 7. The Engineer shall prepare and submit to the Owner for approval and to the Administrator for approval, if approval of the Administrator is required, plan and profile sheets for all transmission lines.

Section 8. In specifying right-of-way clearing for transmission lines where ''feathering'' and/or undulating boundaries are required, the Engineer shall mark all brush and trees to be removed unless such marking is the responsibility of another authority. The Engineer shall also compute all clearing units, and show all clearing units on the plan and profile drawings or on separate drawings prepared for this purpose.

Section 9. The Engineer shall prepare, and within _____ days after the date of execution of this Agreement submit to the Owner for approval and to the Administrator for approval, if approval of the Administrator is required, two copies of complete and detailed plans and specifications, drawings,

maps, and other documents required for the construction of the Project (all of the foregoing being hereinafter collectively called the ''Plans and Specifications''). In the preparation of the Plans and Specifications, the Engineer shall consult with the Owner to the end that the Project shall serve the purpose intended by the Owner. Unless otherwise directed by the Owner, the Engineer shall use Construction Work Plans and Engineering Studies, as furnished by the Owner, as a basis for the preparation of the Plans and Specifications. The Engineer shall diligently make such changes in the Plans and Specifications as may be required by the Owner or the Administrator as a condition of approval thereof.

Section 10. The Engineer shall, for each substation, prepare and furnish for the Owner's approval and for the Administrator's approval, if approval of the Administrator is required, the following drawings and such others as may be necessary or desirable for the construction of the Project:

One line diagram (relays, breakers, transformers, switches, etc.)
Three line diagram (PT, CT, phasing, etc.)
Plot plan (excluding land surveys and plots necessary in acquisition of property)
Grading plan, fence layout and details
Structure plan and details
Structure elevations (with section views)
Footing plan and details
Grounding plan and details
Cable trench and layout plan
Lighting plan and details
Control house plan and details
Control house elevations and details
Material lists

Section 11. All maps, drawings, plan and profile sheets, plans and specifications, contract forms, addenda, estimates, studies, and other documents required to be prepared or submitted by the Engineer under this Article II or other articles of this Agreement shall conform to the applicable standard specifications and other forms prescribed by the Administrator, unless deviation therefrom shall have been approved by the Administrator.

Section 12. The Engineer shall furnish to the Owner all engineering information, data, and drawings required for procuring all necessary or desirable permits, licenses, franchises, and authorizations from public bodies, and all necessary or desirable permits, licenses, or agreements with respect to the crossing of navigable streams, railroads, and power lines, and with respect to the paralleling or crossing of communications lines and signal circuits, and shall assist the Owner to the extent necessary to obtain such permits, licenses, franchises, authorizations, and agreements. The Engineer shall also furnish to the Owner all engineering information, data, and drawings required for procuring transmission line right-of-way through condemnation proceedings. If requested by the Owner, the Engineer shall attend, or appear as a witness in, hearings or other proceedings before public service commissions or other regulatory bodies in connection with procuring of the foregoing.

Section 13. When notified by the Administrator (if approval of the Administrator is required) and by the Owner of their approval of the form of Construction Contract, the Engineer shall immediately take all appropriate and necessary action to procure full, free, and competitive bidding for the award of such contract or contracts, and when requested assist the Owner with the purchase of material and equipment. The term ''Construction Contract'' as used herein shall also include right-of-way clearing contracts, equipment contracts, or materials contracts if such contracts are utilized in the construction of the project. In fulfilling this responsibility, the Engineer shall prepare and submit to the Owner for approval a recommended list of qualified bidders to construct the project. Upon approval of such list by the Owner, the Engineer, in collaboration with the Owner, shall fix a date for the opening of bids for such contracts. The Engineer shall prepare and furnish to the qualified bidders the Plans and Specifications and Construction Drawings together with all necessary forms and other documents.

Section 14. The Engineer shall be available to each prospective bidder for consultation with respect to the details of the Plans and Specifications and all other matters pertaining to the preparation of the proposals for the construction of the Project or the supply of materials or services therefor. The Engineer, or a competent representative of the Engineer, shall attend and supervise all openings of bids for the construction of the Project or for the furnishing of materials or services therefor. In case fewer than three (3) bids are received for the construction of the Project or component parts of the Project, the Owner shall be notified immediately and such bids shall remain unopened unless permission is obtained from the Owner for the opening of such bids. If bids are opened, the Engineer shall carefully check and prepare detailed assembly unit price tabulations of all bids received, and shall render to the Owner all such assistance as shall be required in connection with consideration of the bids received so that contracts may be prudently and properly awarded in accordance with the policy and procedure prescribed by the Owner and the Administrator.

Section 15. If any change is to be made in the Plans and Specifications after the Construction Contract has been approved by the Owner and by the Administrator, if approval of the Administrator is required, the Engineer shall prepare and submit the necessary details for a contract amendment in accordance with the procedure prescribed by the Owner and the Administrator.

Article III

Staking

Section 1. The Engineer, with the approval of the Owner, shall determine when staking of the Project shall begin; provided, however, that the Engineer shall not commence staking until the Owner shall have certified that all right-of-way authorizations and easements reasonably required for the construction of the Project have been procured. The Owner shall furnish qualified persons to negotiate with landowners or tenants with respect to such right-of-way authorizations and easements and the locations of meter poles or service entrances. The Engineer shall proceed diligently with such staking and continue therewith in such manner as not to retard the progress of construction of the Project.

The staking shall be done in a thorough and workmanlike manner and in accordance with the latest revision of the National Electrical Safety Code, applicable State codes, plans and specifications, and approved transmission line plan and profile sheets. The Engineer shall in no case stake lines other than those authorized by the Owner. The Engineer shall replace all stakes lost or removed prior to or during construction of the Project. All costs, including costs of stakes, equipment, and other material used in connection with the staking, shall be borne by the Engineer. All stakes shall be marked to show the pole number. Where practicable, all stakes shall be driven in such manner that the pole number shall be visible from the pole hauling truck when poles are being distributed. Each transmission structure stake shall be marked with the station number and the height and class of pole. Where it is probable that the Contractor will have difficulty in locating stakes, the Engineer shall drive a four-foot (1.2 m) building lath or equivalent in addition and adjacent to the stake. The Engineer shall give due consideration to the location of the consumer's load center and service termination in staking pole locations on or near the consumer's premises so that the service entrance cable or low voltage conductors to buildings will be as short as possible.

Section 2. The Engineer shall cause staking sheets or structure lists to be maintained in such form as the Owner shall require, on which shall be accurately entered all pertinent and useful information and directions concerning the construction of the Project. Five counterparts of the staking sheets or structure lists shall be supplied by the engineer to the Contractor and two copies shall be supplied to the Owner. When revisions in staking sheets or structure lists are necessary, the Engineer shall cause all copies of the staking sheets or structure lists to be corrected to reflect such revisions in the information or directions previously incorporated thereon.

Section 3. The Engineer shall prepare and submit to the Owner a report showing the quantity, kind, price, and extended total of all units of construction for each portion of the Project at the time such portion is released to the Contractor for construction.

Section 4. A competent resident engineer, with full authority to act for the Engineer, shall be maintained by the Engineer at the site of the Project at all times when staking is being performed.

Article IV

Construction Management

Section 1. The Engineer shall supervise the construction of the Project and shall make a diligent effort to ensure the expeditious and economical construction thereof in accordance with the Plans and Specifications and the terms of the Construction Contract or

contracts and ensure that all specified environmental criteria are followed. The Engineer shall carefully inspect all materials and equipment prior to their incorporation in the Project and shall promptly reject those not in compliance with the Specifications. The Engineer shall also supervise and inspect the incorporation of the materials in the Project and the workmanship with which such materials are incorporated. Such inspection shall be deemed to be adequate if a reasonable percentage of all construction units are inspected at the time of installation. The Engineer, as representative of the Owner, shall have sole responsibility for requiring the Contractor to perform the Construction Contract in accordance with its terms and the Plans and Specifications; and, in performing the duties incident to such responsibility, the Engineer shall issue to the Contractor such directives and impose such restrictions as may be required to obtain reasonable and proper compliance by the Contractor with the terms of the Construction Contract and the Plans and Specifications, in construction of the Project; provided that the Engineer shall not be required to exercise any actual control over employees of the Contractor. The term ''supervise'' when used herein shall not confer upon the Engineer responsibility for the Contractor's construction means, methods, or techniques. The obligations of the Engineer hereunder run to and are for the benefit of only the Administrator and the Owner.

Section 2. The Engineer shall measure ground resistance at all substation ground fields prior to bonding the ground field to the substation structure. In addition, upon recommendation by the Engineer and authorization by the Owner, the Engineer shall measure the ground resistance at the following locations:

(a) At all transmission structures with overhead ground wire prior to the installation of the overhead ground wire.

(b) At all transmission structures with pole grounds prior to the installation of power conductor. The Engineer shall prepare a report of the ground resistance measurements mentioned above and submit such report to the Owner together with recommendations for changes, if any, required to ensure satisfactory operation. To the extent such changes are approved, the Engineer shall make appropriate changes in the Plans and Specifications in accordance with the provisions of Section 15 of Article II.

Section 3. The Engineer shall maintain at the site of the Project during the entire period of construction a competent resident engineer with full authority to act for the Engineer, unless specifically directed otherwise by the Owner in writing. When necessary to assure adequate inspection, one or more competent inspectors shall also be maintained when construction units are being installed or corrective work is being performed, the number of inspectors being subject to approval by the Owner. The Engineer shall report, in writing, defects in workmanship or materials to the Contractor and the Owner and shall instruct the Contractor to correct such defects immediately, in accordance with the terms of the Construction Contract. A resident engineer shall be present during the final inspection of completed construction.

Section 4. The Engineer shall test along lines, immediately after they have been energized, for objectionable radio interference. All cases of radio interference due to faulty construction of or defective equipment in the Project shall be reported to the Contractor for correction.

Article V

Final Documents

Section 1. The Engineer shall prepare and, within twenty (20) days after the completion of construction of the Project by the Contractor, submit complete and detailed final documents to the Owner for approval and to the Administrator for approval, if approval of the Administrator is required.

Article VI

Compensation

Section 1. The Owner shall pay the Engineer for the services performed hereunder as indicated in the attached Schedule A.

Section 2. The total compensation to be paid in connection with this Agreement shall not exceed $_____ (_____ Dollars.)

Section 3. Compensation payable to the Engineer under this Agreement shall be in addition to taxes or levies (excluding Federal, State and local income taxes) which may be assessed against the Engineer by any State or political subdivision directly on services performed or payments for services performed by the Engineer pursuant to this Agreement. Such taxes or levies, which the Engineer may be required to collect or pay, shall, in turn, be added by the Engineer to invoices submitted to the Owner pursuant to this Agreement.

Section 4. Interest at the rate of _____ percent (_____ %) per annum [percentage is not to exceed any applicable State usury laws] shall be paid by the Owner to the Engineer on all unpaid balances due the Engineer commencing thirty (30) days after the due date; provided that the delay in payment beyond the due date is not caused by any condition within the control of the Engineer. Such compensation shall be paid ten (10) days after the amount of interest has been determined by the Engineer and the Owner.

Section 5. Prior to the time when any payment shall be made to the Engineer pursuant to this Agreement, the Engineer, if requested by the Owner, shall furnish to the Owner, as a condition precedent to such payment, a certificate to the effect that all salaries or wages earned by the employees of the Engineer in connection with the Project, have been fully paid by the Engineer up to and including a date not more than fifteen (15) days prior to the date when such payment shall be made. Before the time when the final payment shall be made to the Engineer by the Owner, the Engineer shall also furnish to the Owner, as a condition precedent to such payment, a certificate that all the employees of the Engineer have been paid for services rendered by them in connection with the Project and that all other obligations which might become a lien upon the Project have been paid.

Article VII

Miscellaneous

Section 1. The Owner may at any time terminate this Agreement by giving notice to the Engineer in writing to that effect not less than ten (10) days prior to the effective date of termination specified in the notice. Such notice shall be deemed given if delivered or mailed to the last known address of the Engineer. From and after the effective date specified in such notice, this Agreement shall be terminated, except that the Engineer shall be entitled to receive compensation for services hereunder as provided in Section 2 of this Article VII.

Section 2. In the event that this Agreement at any time be terminated pursuant to Section 1 of this Article VII, the compensation which shall be payable to the Engineer by the Owner shall be computed so far as possible in accordance with the provisions of Article VI. To the extent that the provisions of Section 1 of Article VI cannot be applied because construction is incomplete at the effective date of such termination, the Engineer shall be paid for engineering services in respect of incomplete construction a sum which shall bear the same ratio of the compensation which would have been payable under the provisions of Section 1 of Article VI, if such construction had been completed, as the engineering services in respect of such incomplete construction bear to the engineering services which would have been rendered if construction had been completed.

If requested by the Owner, the Engineer shall submit to the Owner in duplicate a verified statement of actual expenses in respect of such incomplete construction. All compensation payable under this Section 2 shall be due and payable thirty (30) days after the approval by the Owner of the amount due hereunder.

Section 3. The Engineer shall have the right, by giving the Owner not less than thirty (30) days notice in writing, to terminate this Agreement if the Engineer shall have been prevented by conditions beyond the control and without the fault of the Engineer (a) from commencing performance of this Agreement for a period of twelve (12) months from the date of this Agreement, or (b) from proceeding with the completion of full performance of any remaining services required of the Engineer pursuant to this Agreement for a period of six (6) months from the date of last performance by the Engineer of other services required pursuant to this Agreement. From and after the effective date specified in such notice this Agreement shall be terminated, except that the Engineer shall be entitled to receive compensation for services performed hereunder, computed and payable in the same manner as set forth in Section 2 of this Article.

Section 4. Upon completion of the Project or termination of the Contract, the Engineer shall be obligated forthwith to deliver to the Owner all maps, tracings, and drawings of the Project and all letters, documents, and other material, including all records pertaining thereto.

The term ''Completion of the Project'' shall mean full performance of all obligations

under this Contract and all amendments and revisions thereof as evidenced by the approval of the final documents by the Owner and by the Administrator, if approval of the Administrator is required.

Section 5. The Engineer shall follow all applicable RUS rules and regulations.

Section 6. The Engineer shall prepare and execute in such form and detail as the Owner and the Administrator shall direct all estimates, certificates, reports, and other documents required to be executed by the Engineer pursuant to the terms of the Construction Contract or the Loan Contract, including progress reports of engineering services and reports of the progress of construction.

Section 7. The Engineer shall approve each monthly estimate of the Contractor prior to payment by the Owner. Such approval shall include a certification by the Engineer that all construction for which payment is requested has been completed in accordance with the terms of the Construction Contract and that all defective construction, of which the Contractor shall have received fifteen (15) or more days written notice, has been corrected. The Engineer shall also maintain at the site of the Project a cumulative inventory of all units of construction incorporated in the Project.

Section 8. The Engineer shall notify the Owner when the Project, or any section thereof, shall be ready to be energized. When requested by the Administrator, such notice shall also be given to the Administrator. The Engineer shall assist the Owner in causing the Project, or such section thereof, to be energized.

Section 9. Insurance. The Engineer shall take out and maintain throughout the period of this Agreement insurance of the following types and minimum amounts:

(a) Workers' compensation and employers' liability insurance, as required by law, covering all of the Engineer's employees who perform any of the obligations of the Engineer under the Agreement. If any employer or employee is not subject to the workers' compensation laws of the governing State, then insurance shall be obtained voluntarily to extend to the employer and employee coverage to the same extent as though the employer or employee were subject to the workers' compensation laws.

(b) Public liability insurance covering all operations under the Agreement shall have limits for bodily injury or death of not less than $1 million each occurrence, limits for property damage of not less than $1 million each occurrence, and $1 million aggregate for accidents during the policy period. A single limit of $1 million of bodily injury and property damage is acceptable. This required insurance may be in a policy or policies of insurance, primary and excess including the umbrella or catastrophe form.

(c) Automobile liability insurance on all motor vehicles used in connection with the Agreement, whether owned, nonowned, or hired, shall have limits for bodily injury or death of not less than $1 million per person and $1 million per occurrence, and property damage limits of $1 million for each occurrence. This required insurance may be in a policy or policies of insurance, primary and excess including the umbrella or catastrophe form.

(d) Errors and Omissions (Professional Liability) Insurance in an amount at least as large as the maximum compensation specified in Article VI, Section 2, but not less than $500,000.

The Owner shall have the right at any time to require public liability insurance and property damage liability insurance greater than those required in subsections ''b'' and ''c'' of this Section. In any such event, the additional premium or premiums payable solely as the result of such additional insurance shall be added to the total compensation to be paid under this Agreement.

The Owner shall be named as Additional Insured on all policies of insurance required in subsections ''b'' and ''c'' of this Section.

The policies of insurance shall be in such form and issued by such insurer as shall be satisfactory to the Owner. The Engineer shall furnish the Owner a certificate evidencing compliance with the foregoing requirements which shall provide not less than thirty (30) days prior written notice to the Owner of any cancellation or material change in the insurance.

The Engineer shall also follow the requirements of 7 CFR part 1788, RUS Fidelity and Insurance Requirements for Electric and Telephone Borrowers.

Section 10. The obligations and duties to be performed by the Engineer under this Agreement shall be performed by persons qualified to perform such duties efficiently. The Engineer, if the Owner shall so direct, shall replace any resident engineer or other persons employed by the Engineer in connection with the Project. The Engineer shall file with the Owner and the Administrator a statement, signed by the Engineer, of the qualifications, including specific experience of each engineer and inspector assigned to the Project and the duties assigned to each.

Section 11. Approvals, directions, and notices provided to be given hereunder by the Administrator to the Engineer or the Owner shall be deemed to be properly given if given by any person authorized by the Administrator to give approvals, directions, or notices.

Section 12. The Engineer shall establish and maintain an office at the site of the Project, with telephone service where available, when staking or construction is in progress. Any notice, instructions, or communications delivered to such office shall be deemed to have been delivered to the Engineer.

Section 13. This Agreement may simultaneously be executed and delivered in two or more counterparts each of which so executed and delivered shall be deemed to be an original, and all shall constitute but one and the same instrument.

Section 14. The obligations of the Engineer under this Agreement shall not be assigned without the approval in writing of the Owner.

Section 15. The Engineer shall comply with applicable statutes pertaining to engineering and warrants that _____ [Name of Engineer] who will be in responsible charge of the Project possesses license number _____ issued by the State of _____ on the _____ day of _____, 19____.

In witness whereof, the Parties hereto have caused this Agreement to be duly executed.

_____ Owner

By _____ President

ATTEST: _____ Secretary

_____ Engineer

By _____ President, Partner [Strike out inapplicable designation]

ATTEST: _____ Secretary

Schedule A—Compensation

[End of clause]

§§ 1724.77–1724.99 [Reserved]

Dated: June 17, 1998.

Jill Long Thompson,

Under Secretary, Rural Development.

[FR Doc. 98–16792 Filed 6–26–98; 8:45 am]

BILLING CODE 3410–15–P

federal register

Monday
June 29, 1998

Part III

Department of Agriculture

Forest Service

36 CFR Part 242

Department of the Interior

Fish and Wildlife Service

50 CFR Part 100

Subsistence Management Regulations for Public Lands in Alaska, Subpart C and Subpart D—1998–1999 Subsistence Taking of Fish and Wildlife Regulations; Final Rule

DEPARTMENT OF AGRICULTURE

Forest Service

36 CFR Part 242

DEPARTMENT OF THE INTERIOR

Fish and Wildlife Service

50 CFR Part 100

RIN 1018–AE12

Subsistence Management Regulations for Public Lands in Alaska, Subpart C and Subpart D—1998–1999 Subsistence Taking of Fish and Wildlife Regulations

ACTION: Final rule.

SUMMARY: This final rule establishes regulations for seasons, harvest limits, methods, and means related to taking of wildlife for subsistence uses during the 1998–1999 regulatory year. The rulemaking is necessary because Subpart D is subject to an annual public review cycle. This rulemaking replaces the wildlife regulations included in the ''Subsistence Management Regulations for Public Lands in Alaska, Subpart D—1997–1998 Subsistence Taking of Fish and Wildlife Regulations'', which expire on June 30, 1998. This rule also amends the Customary and Traditional Use Determinations of the Federal Subsistence Board (Section ____.24 of Subpart C) and restates and extends Sections ____.26, Subsistence Taking of Fish and ____.27, Subsistence Taking of Shellfish.

DATES: Section ____.24 is effective July 1, 1998. Section ____.25 is effective July 1, 1998, through June 30, 1999. Sections ____.26 and ____.27 are effective January 1, 1999, through December 31, 1999.

FOR FURTHER INFORMATION CONTACT: Chair, Federal Subsistence Board, c/o U.S. Fish and Wildlife Service, Attention: Thomas H. Boyd, Office of Subsistence Management, telephone (907) 786–3888. For questions specific to National Forest System lands, contact Ken Thompson, Regional Subsistence Program Manager, USDA, Forest Service, Alaska Region, telephone (907) 271–2540.

SUPPLEMENTARY INFORMATION:

Background

Title VIII of the Alaska National Interest Lands Conservation Act (ANILCA) (16 U.S.C. 3111–3126) requires that the Secretary of the Interior and the Secretary of Agriculture (Secretaries) implement a joint program to grant a preference for subsistence uses of fish and wildlife resources on public lands, unless the State of Alaska enacts and implements laws of general applicability which are consistent with ANILCA, and which provide for the subsistence definition, preference, and participation specified in Sections 803, 804, and 805 of ANILCA. The State implemented a program that the Department of the Interior previously found to be consistent with ANILCA. However, in December 1989, the Alaska Supreme Court ruled in *McDowell v. State of Alaska* that the rural preference in the State subsistence statute violated the Alaska Constitution. The Court's ruling in *McDowell* required the State to delete the rural preference from the subsistence statute, and therefore, negated State compliance with ANILCA. The Court stayed the effect of the decision until July 1, 1990.

As a result of the *McDowell* decision, the Department of the Interior and the Department of Agriculture (Departments) assumed, on July 1, 1990, responsibility for implementation of Title VIII of ANILCA on public lands. On June 29, 1990, the Temporary Subsistence Management Regulations for Public Lands in Alaska were published in the **Federal Register** (55 FR 27114–27170). Consistent with Subparts A, B, and C of these regulations, a Federal Subsistence Board was established to administer the Federal subsistence management program. The Board's composition includes a Chair appointed by the Secretary of the Interior with concurrence of the Secretary of Agriculture; the Alaska Regional Director, U.S. Fish and Wildlife Service; the Alaska Regional Director, U.S. National Park Service; the Alaska State Director, U.S. Bureau of Land Management; the Alaska Area Director, U.S. Bureau of Indian Affairs; and the Alaska Regional Forester, USDA Forest Service. Through the Board, these agencies have participated in development of regulations for Subparts A, B, and C, and the annual Subpart D regulations. All Board members have reviewed this rule and agree with its substance. Because this rule relates to public lands managed by an agency or agencies in both the Departments of Agriculture and the Interior, identical text will be incorporated into 36 CFR part 242 and 50 CFR part 100.

Applicability of Subparts A, B, and C

Subparts A, B, and C (unless otherwise amended) of the Subsistence Management Regulations for Public Lands in Alaska, 50 CFR 100.1 to 100.23 and 36 CFR 242.1 to 242.23, remain effective and apply to this rule for §§ ____.23–____.25. Therefore, all definitions located at 50 CFR 100.4 and 36 CFR 242.4 apply to regulations found in this subpart.

Navigable Waters

At this time, Federal subsistence management program regulations apply to all non-navigable waters located on public lands and to navigable waters located on the public lands identified at 50 CFR 100.3(b) and 36 CFR 242.3(b) of the Subsistence Management Regulations for Public Lands in Alaska, Subparts A, B, and C (57 FR 22940–22964) published May 29, 1992. Nothing in these regulations is intended to enlarge or diminish authorities of the Departments to manage submerged lands, title to which is held by the United States government.

The Board recognizes Judge Holland's order granting preliminary relief to the plaintiffs in the case of the *Native Village of Quinhagak et al. v. United States of America et al.* Therefore, to the extent that these regulations would continue any existing restrictions on the taking of rainbow trout by the residents of Quinhagak and Goodnews Bay in the Kanektok, Arolik, and Goodnews Rivers, those regulations will not be enforced pending completion of proceedings in that case. However, in light of the continuation of the proceedings in the consolidated ''Katie John'' litigation, a petition to the Secretaries of the Interior and Agriculture addressing jurisdiction in navigable waters, and activities in the State Legislature, no attempt is being made to alter the fish and shellfish portions of the regulations (Sections ____.26 and ____.27) until final guidance has been received regarding the jurisdictional authority of the Federal government over navigable waters in general, and specifically with respect to the waters at issue in *Native Village of Quinhagak et al. v. United States of America et al.*

Federal Subsistence Regional Advisory Councils

Pursuant to the Record of Decision, Subsistence Management Regulations for Federal Public Lands in Alaska, April 6, 1992, and the Subsistence Management Regulations for Federal Public Lands in Alaska, 36 CFR 242.11 (1992) and 50 CFR 100.11 (1992), and for the purposes identified therein, Alaska has been divided into ten subsistence resource regions, each of which is represented by a Federal Subsistence Regional Advisory Council (Regional Council). The Regional Councils provide a forum for rural residents with personal knowledge of local conditions and resource requirements to have a meaningful role

in the subsistence management of fish and wildlife on Alaska pubic lands. The Regional Council members represent varied geographical, cultural, and user diversity within each region.

The Regional Councils have had a substantial role in reviewing the proposed rule and making recommendations for the final rule. Moreover, the Council Chairs, or their designated representatives, presented their Council's recommendations at the Board meeting in May 1998.

Summary of Changes

Section ____.24 (Customary and traditional use determinations) was originally published in the **Federal Register** (57 FR 22940) on May 29, 1992. Since that time, the Board has made a number of Customary and Traditional Use Determinations at the request of effected subsistence users. Those modifications, along with some administrative corrections, were published in the **Federal Register** (59 FR 27462, published May 27, 1994; 59 FR 51855, published October 13, 1994; 60 FR 10317, published February 24, 1995; 61 FR 39698, published July 30, 1996; and 62 FR 29016, published May 29, 1997.) During its May 4–May 6, 1998, meeting, the Board made additional determinations in addition to various annual season and harvest limit changes. The public has had extensive opportunity to review and comment on all changes. Additional details on the recent Board modifications are contained in the section on Analysis of Proposals Adopted by the Board.

Section ____.25 (Subpart D) regulations are subject to an annual cycle and require development of an entire new rule each year. Proposed Subpart D regulations for the 1998–1999 seasons and harvest limits, and methods and means were published on July 25, 1997, in the **Federal Register** (62 FR 39987–40029). A 60-day comment period providing for public review of the proposed rule and calling for proposals was advertised by mail, radio, and newspaper. During that period the Regional Councils met and, in addition to other Regional Council business, received suggestions for proposals from the public. Overall, the Board received a total of 109 proposals for change to Customary and Traditional Use Determinations or to Subpart D. Subsequent to the 60-day review period, the Board prepared a booklet describing 109 proposals and 5 Requests for Reconsideration that were deferred from the 1997–1998 Board cycle and distributed it to the public. The public had an additional 30 days in which to comment on the proposals for changes to the regulations. The ten Regional Councils met again, received public comments, and formulated their recommendations to the Board on proposals for their respective regions. Eight of the proposals were withdrawn from consideration and three Special Actions were included for deliberation at the May Board meeting. These final regulations reflect Board review and consideration of Regional Council recommendations and public comments submitted to the Board.

Section ____.26 (Subsistence taking of fish) and Section ____.27 (Subsistence taking of shellfish) were last published on May 29, 1997, (62 FR 29016). Fish and shellfish regulations are effective from January 1 through December 31 each year. Due to litigation and petitions to the Secretaries of the Interior and Agriculture, both relating to extended jurisdiction to navigable waters, the fish and shellfish regulations are not revised, but rather, are extended through December 31, 1999.

Analysis of Proposals Rejected by the Board

The Board rejected 28 proposals, Requests for Reconsideration, or Special Actions based on recommendations from the respective Regional Council and additional factors. Seven of the rejected proposals were rendered moot by adoption of other proposals.

Five proposals requested that seasons for deer be shortened or eliminated. The Board determined that the biological and harvest data did not support a need to close or shorten seasons in order to protect the population or the subsistence users' opportunity to harvest wildlife.

The Board also rejected three proposals requesting that customary and traditional use determinations be revised for bear or moose in certain areas. In each case, the cultural resource data did not substantiate the request.

One proposal requesting same-day airborne hunting of caribou was rejected based on testimony that it was not a customary and traditional method of harvest and on possible conflicts with the Airborne Hunting Act.

One proposal requesting shooting of caribou from a moving snow-machine was rejected based on a conservation concern related to indiscriminate wounding of animals.

Four proposals requested expanding seasons for beaver, moose, marten, mink, and weasel and establishing a season for muskox. These proposals were rejected based on concern for low populations in the specific locales.

The Board rejected one proposal that would have required meat to be left on the bone until removed from the field. This proposal was rejected as unduly imposing on the subsistence user without good cause.

The Board also rejected the five Requests for Reconsideration because additional data supporting their original decisions were presented at the respective Regional Council meetings.

The Board also deferred action on 16 proposals and part of one other in order to collect additional data, or allow communities or Regional Councils additional time to review the issues and provide additional information.

Analysis of Proposals Adopted by the Board

The Board adopted 64 proposals or Special Actions and parts of 1 other. Some of these proposals were adopted as submitted and others were adopted with modifications suggested by the respective Regional Council or developed during the Board's public deliberations.

All of the adopted proposals, except one, were recommended for adoption by at least one of the Regional Councils and were based on meeting customary and traditional uses, harvest practices, or protecting wildlife populations. Detailed information relating to justification on each proposal may be found in the Board meeting transcripts, available for review at the Office of Subsistence Management at the address listed previously. Some additional changes are a result of Board actions occurring over the past year. Additional technical clarifications and removal of excess materials have been made which result in a more readable document.

Southeast Region

Eighteen proposals and one Request for Reconsideration from April 1997 affecting residents of the Southeast Region were acted on by the Board resulting in the following changes to the regulations found in § ____.24 and § ____.25.

- Opened a closed area to moose hunting in Unit 1(B).
- Established a customary and traditional use determination for black bear, brown bear, deer, and goat in Unit 1(C).
- Added a requirement for a Federal registration permit for a doe hunt in Unit 2.
- Opened a moose season in a previously closed area in Unit 3.
- Established a customary and traditional use determination for goat and wolf in Units 5 and 6(A).

Southcentral Region

Eighteen proposals and one Request for Reconsideration from April 1997 affecting residents in the Southcentral Region were acted on by the Board resulting in the following changes to the regulations found in § ____.24 and § ____.25.

- Revised the lynx trapping season in a number of Units.
- Opened Federal public lands to hunting and trapping of otter in Unit 6.
- Closed Federal public lands to hunting caribou in Unit 11.
- Revised the customary and traditional use determination for black bear, brown bear, and goat in Unit 11.
- Revised the customary and traditional use determination for goat, brown bear, caribou, sheep, and moose in Unit 11.
- Established a goat season in Unit 11.
- Established a special sheep hunt for the elderly in Unit 11.
- Established a customary and traditional use determination for brown bear in Unit 13.
- Revised the customary and traditional use determination for caribou in Unit 13 and black bear in Unit 16.
- Extended the season for caribou in Unit 13.
- Continued a moose season in Unit 15.

Kodiak/Aleutians Region

Four proposals and one Request for Reconsideration from April 1997 affecting residents of the Kodiak/Aleutians Region were acted on by the Board during their May meeting resulting in the following changes to the regulations found in § ____.24 and § ____.25.

- Opened an elk hunt in Unit 8.
- Extended the deer season in Unit 8.
- Changed the customary and traditional use determination for caribou in part of Unit 10.

Bristol Bay Region

Seventeen proposals and two Special Actions affecting residents of the Bristol Bay Region were acted on by the Board resulting in the following changes to the regulations found in § ____.24 and § ____.25.

- Revised the customary and traditional use determination for brown bear in part of Unit 9.
- Revised the seasons for caribou, brown bear, moose, and various furbearers in Units 9 and 17.
- Revised the customary and traditional use determination for black bear and brown bear in Unit 17.
- Revised the season and harvest restrictions for caribou in Units 9, 17, and 19.
- Revised the harvest restrictions for moose in Unit 9, 17, and 19.
- Revised the season and harvest limit for various furbearers in Unit 17.

Yukon-Kuskokwim Delta Region

Two proposals affecting residents of the Yukon-Kuskokwim Delta Region were acted on by the Board resulting in the following changes to the regulations found in § ____.24 and § ____.25.

- Closed an area to moose hunting in a portion of Unit 18.

Western Interior Region

Twenty-one proposals affecting residents of the Western Interior Region were acted on by the Board resulting in the following changes to the regulations found in § ____.24 and § ____.25.

- Revised the customary and traditional use determinations for brown bear and caribou in Unit 19.
- Revised the customary and traditional use determinations for moose and caribou in Unit 21.
- Revised the seasons for beaver, moose, wolf, and caribou in Units 19, 21, and 24.

Seward Peninsula Region

Seven proposals, one Request for Reconsideration from April 1997, and one Special Action affecting residents of the Seward Peninsula Region were acted on by the Board resulting in the following changes to the regulations found in § ____.24.

- Established a cooperative hunt program with the State for muskox in Unit 22.
- Revised seasons and/or harvest restrictions for brown bear, beaver, moose, and wolverine in Unit 22.

Northwest Arctic Region

Two proposals affecting residents of the Northwest Arctic Region was acted on by the Board resulting in the following changes to the regulations found in § ____.24.

- Revised customary and traditional use determinations for sheep and black bear in Unit 23.

Eastern Interior Region

Nine proposals affecting residents of the Eastern Interior Region were acted on by the Board resulting in the following changes to the regulations found in § ____.24 and § ____.25.

- Revised the seasons and harvest restrictions for moose in Units 20 and 25.
- Revised the customary and traditional use determination for brown bear, caribou, sheep, and moose for Unit 12.
- Revised the customary and traditional use determination for caribou for Units 20 and 25.
- Established a season for brown bear in Units 12 and 20.

North Slope Region

Two proposals and one Request for Reconsideration from April 1997 affecting residents of the North Slope Region were acted on by the Board resulting in the following changes to the regulations found in § ____.24 and § ____.25.

- Revised the harvest limit for sheep in part of Unit 26.

The Board finds that additional public notice under the Administrative Procedure Act (APA) for this final rule are unnecessary, and contrary to the public interest. The Board has provided extensive opportunity for public input and involvement over and above standard APA requirements, including participation in multiple Regional Council meetings, additional public review and comment on all proposals for regulatory change, and opportunity for additional public comment during the Board meeting prior to deliberation. Additionally, an administrative mechanism exists (and has been used by the public) to request reconsideration of the Board's decision on any particular proposal for regulatory change. Over the seven years the Program has been operating, there has been no benefit to the public demonstrated by the delaying the effective date of the regulations. A lapse in regulatory control could seriously affect the continued viability of wildlife populations, adversely impact future subsistence opportunities for rural Alaskans, and would generally fail to serve the overall public interest. Therefore, the Board finds good cause pursuant to 5 U.S.C. 553(b)(B) to waive the public notice prior to publication of this rule. The Board finds good cause under 5 U.S.C. 553(d)(3) to make this rule effective July 1, 1998.

Conformance With Statutory and Regulatory Authorities

National Environmental Policy Act Compliance—A Draft Environmental Impact Statement (DEIS) that described four alternatives for developing a Federal Subsistence Management Program was distributed for public comment on October 7, 1991. That document described the major issues associated with Federal subsistence management as identified through public meetings, written comments and staff analysis and examined the environmental consequences of the four

alternatives. Proposed regulations (Subparts A, B, and C) that would implement the preferred alternative were included in the DEIS as an appendix. The DEIS and the proposed administrative regulations presented a framework for an annual regulatory cycle regarding subsistence hunting and fishing regulations (Subpart D). The Final Environmental Impact Statement (FEIS) was published on February 28, 1992.

Based on the public comment received, the analysis contained in the FEIS, and the recommendations of the Federal Subsistence Board and the Department of the Interior's Subsistence Policy Group, it was the decision of the Secretary of the Interior, with the concurrence of the Secretary of Agriculture, through the U.S. Department of Agriculture-Forest Service, to implement Alternative IV as identified in the DEIS and FEIS (Record of Decision on Subsistence Management for Federal Public Lands in Alaska (ROD), signed April 6, 1992). The DEIS and the selected alternative in the FEIS defined the administrative framework of an annual regulatory cycle for subsistence hunting and fishing regulations. The final rule for Subsistence Management Regulations for Public Lands in Alaska, Subparts A, B, and C (57 FR 22940–22964, published May 29, 1992) implemented the Federal Subsistence Management Program and included a framework for an annual cycle for subsistence hunting and fishing regulations.

Compliance with Section 810 of ANILCA—The intent of all Federal subsistence regulations is to accord subsistence uses of fish and wildlife on public lands a priority over the taking of fish and wildlife on such lands for other purposes, unless restriction is necessary to conserve healthy fish and wildlife populations. A Section 810 analysis was completed as part of the FEIS process. The final Section 810 analysis determination appeared in the April 6, 1992, ROD which concluded that the Federal Subsistence Management Program, under Alternative IV with an annual process for setting hunting and fishing regulations, may have some local impacts on subsistence uses, but it does not appear that the program may significantly restrict subsistence uses.

Paperwork Reduction Act—These rules contain information collection requirements subject to Office of Management and Budget (OMB) approval under the Paperwork Reduction Act of 1995. They apply to the use of public lands in Alaska. The information collection requirements described below have been approved by OMB under 44 U.S.C. 3501 and have been assigned clearance number 1018–0075, which expires 5/31/2000.

The collection of information will be achieved through the use of the Federal Subsistence Hunt Permit Application. This collection information will establish whether the applicant qualifies to participate in a Federal subsistence hunt on public land in Alaska and will provide a report of harvest and location of harvest.

The likely respondents to this collection of information are rural Alaska residents who wish to participate in specific subsistence hunts on Federal land. The collected information is necessary to determine harvest success and harvest location in order to make management decisions relative to the conservation of healthy wildlife populations. The annual burden of reporting and recordkeeping is estimated to average 0.25 hours per response, including time for reviewing instructions, gathering and maintaining data, and completing and reviewing the form. The estimated number of likely respondents under this rule is less than 5,000, yielding a total annual reporting and recordkeeping burden of 1,250 hours or less.

Direct comments on the burden estimate or any other aspect of this form to: Information Collection Officer, U.S. Fish and Wildlife Service, 1849 C Street, NW, MS 224 ARLSQ, Washington, D.C. 20240; and the Office of Management and Budget, Paperwork Reduction Project (Subsistence), Washington, D.C. 20503. Additional information collection requirements may be imposed if Local Advisory Committees subject to the Federal Advisory Committee Act are established under Subpart B.

Economic Effects

This rule was not subject to OMB review under Executive Order 12866. Executive Order 12866 requires each agency to write regulations that are easy to understand. We invite your comments on how to make this rule easier to understand, including answers to questions such as the following: (1) Are the requirements in the rule clearly stated? (2) Does the rule contain technical language or jargon that interferes with its clarity? (3) Does the format of the rule (grouping and order of sections, use of headings, paragraphing, etc.) aid or reduce its clarity? (4) Would the rule be easier to understand if it were divided into more (but shorter) sections? (A ''section'' appears in bold type and is preceded by the symbol ''§ '' and a numbered heading; for example, § [____.24 Customary and traditional determinations.]) (5) Is the description of the rule in the **SUPPLEMENTARY INFORMATION** section of the preamble helpful in understanding the rule? What else could we do to make the rule easier to understand. Send a copy of any comments that concern how we could make this rule easier to understand to: Office of Regulatory Affairs, Department of the Interior, Room 7229, 1849 C Street, NW, Washington, DC 20240. You may also e-mail the comments to this address: Exsec@ios.doi.gov.

The Regulatory Flexibility Act of 1980 (5 U.S.C. 601 *et seq.*) requires preparation of flexibility analyses for rules that will have a significant effect on a substantial number of small entities, which include small businesses, organizations or governmental jurisdictions. The Departments have determined that this rulemaking will not have a significant economic effect on a substantial number of small entities within the meaning of the Regulatory Flexibility Act.

This rulemaking will impose no significant costs on small entities; the exact number of businesses and the amount of trade that will result from this Federal land-related activity is unknown. The aggregate effect is an insignificant positive economic effect on a number of small entities, such as ammunition, snowmachine, and gasoline dealers. The number of small entities affected is unknown; but, the fact that the positive effects will be seasonal in nature and will, in most cases, merely continue preexisting uses of public lands indicates that they will not be significant.

In general, the resources harvested under this rule will be consumed by the local harvester and do not result in a dollar benefit to the economy. However, it is estimated that 2 million pounds of meat are harvested by the local subsistence users annually and, if given a dollar value of $3.00 per pound, would equate to $6 million State wide.

Title VIII of ANILCA requires the Secretaries to administer a subsistence preference on public lands. The scope of this program is limited by definition to certain public lands. Likewise, these regulations have no potential takings of private property implications as defined by Executive Order 12630.

The Service has determined and certifies pursuant to the Unfunded Mandates Act, 2 U.S.C. 1502 et seq., that this rulemaking will not impose a cost of $100 million or more in any given year on local or state governments or private entities. The implementation of this rule is by Federal agencies and

there is no cost involved to any state or local entities or tribal governments.

The Service has determined that these final regulations meet the applicable standards provided in Sections 3(a) and 3(b)(2) of Executive Order 12988.

In accordance with Executive Order 12612, the rule does not have sufficient federalism implications to warrant the preparation of a Federalism Assessment. Title VIII of ANILCA precludes the State from exercising management authority over wildlife resources on Federal lands.

Drafting Information—These regulations were drafted by William Knauer under the guidance of Thomas H. Boyd, of the Office of Subsistence Management, Alaska Regional Office, U.S. Fish and Wildlife Service, Anchorage, Alaska. Additional guidance was provided by Curt Wilson, Alaska State Office, Bureau of Land Management; Sandy Rabinowitch, Alaska Regional Office, National Park Service; Ida Hildebrand, Alaska Area Office, Bureau of Indian Affairs; and Ken Thompson, USDA-Forest Service.

List of Subjects

36 CFR Part 242

Administrative practice and procedure, Alaska, Fish, National forests, Public lands, Reporting and recordkeeping requirements, Wildlife.

50 CFR Part 100

Administrative practice and procedure, Alaska, Fish, National forests, Public lands, Reporting and recordkeeping requirements, Wildlife.

For the reasons set out in the preamble, the Federal Subsistence Board amends title 36, part 242, and title 50, part 100, of the Code of Federal Regulations, as set forth below.

PART____—SUBSISTENCE MANAGEMENT REGULATIONS FOR PUBLIC LANDS IN ALASKA

1. The authority citation for both 36 CFR part 242 and 50 CFR part 100 continues to read as follows:

Authority: 16 U.S.C. 3, 472, 551, 668dd, 3101–3126; 18 U.S.C. 3551–3586; 43 U.S.C. 1733.

Subpart C—Board Determinations

2. In Subpart C of 36 CFR part 242 and 50 CFR part 100, § ____.24 is revised to read as follows:

§ ____.24 Customary and traditional use determinations.

(a) Rural Alaska residents of the listed communities and areas have been determined to have customary and traditional subsistence use of the specified species on Federal public lands in the specified areas. When there is a determination for specific communities or areas of residence in a Unit, all other communities not listed for that species in that Unit have no Federal subsistence for that species in that Unit. If no determination has been made for a species in a Unit, all rural Alaska residents are eligible to harvest fish or wildlife under this part.

Area	Species	Determination
(1) Wildlife Determinations		
Unit 1(C)	Black Bear	Residents of Unit 1(C), 1(D), 3, and residents of Hoonah, Pelican, Point Baker, Sitka, and Tenakee Springs.
1(A)	Brown Bear	Residents of Unit 1(A) except no subsistence for residents of Hyder.
1(B)	Brown Bear	Residents of Unit 1(A), Petersburg, and Wrangell, except no subsistence for residents of Hyder.
1(C)	Brown Bear	Residents of Unit 1(C), Haines, Hoonah, Kake, Klukwan, Skagway, and Wrangell, except no subsistence for residents of Gustavus.
1(D)	Brown Bear	Residents of 1(D).
1(A)	Deer	Residents of 1(A) and 2.
1(B)	Deer	Residents of Unit 1(A), residents of 1(B), 2 and 3.
1(C)	Deer	Residents of 1(C) and (D), and residents of Hoonah, Kake, and Petersburg.
1(D)	Deer	No Federal subsistence priority.
1(B)	Goat	Residents of Units 1(B) and 3.
1(C)	Goat	Residents of Haines, Kake, Klukwan, Petersburg, and Hoonah.
1(B)	Moose	Residents of Units 1, 2, 3, and 4.
1(C) Berner's Bay	Moose	No Federal subsistence priority.
1(D)	Moose	Residents of Unit 1(D).
Unit 2	Brown Bear	No Federal subsistence priority.
2	Deer	Residents of Unit 1(A) and residents of Units 2 and 3.
Unit 3	Deer	Residents of Unit 1(B) and 3, and residents of Port Alexander, Port Protection, Pt. Baker, and Meyer's Chuck.
3, Wrangell and Mitkof Islands	Moose	Residents of Units 1(B), 2, and 3.
Unit 4	Brown Bear	Residents of Unit 4 and Kake.
4	Deer	Residents of Unit 4 and residents of Kake, Gustavus, Haines, Petersburg, Pt. Baker, Klukwan, Port Protection, Wrangell, and Yakutat.
4	Goat	Residents of Sitka, Hoonah, Tenakee, Pelican, Funter Bay, Angoon, Port Alexander, and Elfin Cove.
Unit 5	Black Bear	Residents of Unit 5(A).
5	Brown Bear	Residents of Yakutat.
5	Deer	Residents of Yakutat.
5	Goat	Residents of Unit 5(A)
5	Moose	Residents of Unit 5(A).
5	Wolf	Residents of Unit 5(A).
Unit 6(A)	Black Bear	Residents of Yakutat and residents of 6(C) and 6(D), except no subsistence for Whittier.
6, Remainder	Black Bear	Residents of Unit 6(C) and 6(D), except no subsistence for Whittier.
6	Brown Bear	No Federal subsistence priority.
6(A)	Goat	Residents of Unit 5(A), 6(C), Chenega Bay and Tatilek.
6(C) and (D)	Goat	Residents of Unit 6(C) and (D).
6(A)	Moose	Unit 6(A)—Residents of Units 5(A), 6(A), 6(B) and 6(C).
6(B) and (C)	Moose	Residents of Units 6(A), 6(B) and 6(C).
6(D)	Moose	No Federal subsistence priority.

Area	Species	Determination
6(A)	Wolf	Residents of Units 5(A), 6, 9, 10 (Unimak Island only), 11–13 and the residents of Chicaloon, and 16–26.
6, remainder	Wolf	Residents of Units 6, 9, 10 (Unimak Island only), 11–13 and the residents of Chickaloon and 16–26.
Unit 7	Brown Bear	No Federal subsistence priority.
7	Caribou	No Federal subsistence priority.
7, Brown Mountain hunt area	Goat	Residents of Port Graham and English Bay.
7, that portion draining into Kings Bay	Moose	Residents of Chenega Bay and Tatitlek.
7, Remainder	Moose	No Federal subsistence priority.
7	Sheep	No Federal subsistence priority.
Unit 8	Brown Bear	Residents of Old Harbor, Akhiok, Larsen Bay, Karluk, Ouzinkie, and Port Lions.
8	Deer	Residents of Unit 8.
8	Elk	Residents of Unit 8.
8	Goat	No Federal subsistence priority.
Unit 9(D)	Bison	No Federal subsistence priority.
9(A) and (B)	Black Bear	Residents of Units 9(A) and (B), and 17(A), (B), and (C).
9(A)	Brown Bear	Residents of Pedro Bay.
9(B)	Brown Bear	Residents of Unit 9(B).
9(C) and (D)	Brown Bear	No Federal subsistence priority.
9(E)	Brown Bear	Residents of Chignik Lake, Egegik, Ivanof Bay, Perryville, and Port Heiden/Meshik.
9(A) and (B)	Caribou	Residents of Units 9(B), 9(C) and 17.
9(C)	Caribou	Residents of Unit 9(B), 9(C), 17 and residents of Egegik.
9(D)	Caribou	Residents of Unit 9(D), and residents of False Pass.
9(E)	Caribou	Residents of Units 9(B), (C), (E), 17, and residents of Nelson Lagoon and Sand Point.
9(A), (B), (C) and (E)	Moose	Residents of Unit 9(A), (B), (C) and (E).
9(D)	Moose	No Federal subsistence priority.
9(B)	Sheep	Residents of Iliamna, Newhalen, Nondalton, Pedro Bay, and Port Alsworth.
9, Remainder	Sheep	No determination.
9	Wolf	Residents of Units 6, 9, 10 (Unimak Island only(, 11–13 and the residents of Chickaloon and 16–26.
9(A), (B), (C), & (E)	Beaver	Residents of Units 9(A), (B), (C), (E), and 17.
Unit 10 Unimak Island	Caribou	Residents of False Pass, King Cove, and Sand Point.
10, Remainder	Caribou	No determination.
10	Wolf	Residents of Units 6, 9, 10 (Unimak Island only), 11–13 and the residents of Chickaloon and 16–26.
Unit 11	Bison	No Federal subsistence priority.
11, north of the Sanford River	Black Bear	Residents of Chistochina, Chitina, Copper Center, Gakona, Glennallen, Gulkana, Kenny Lake, Mentasta Lake, Tazlina, Tonsina, and Units 11 and 12.
11, remainder	Black Bear	Residents of Chistochina, Chitina, Copper Center, Gakona, Glennallen, Gulkana, Kenny Lake, Mentasta Lake, Tazlina, Tonsina, and Unit 11.
11, north of the Sanford River	Brown Bear	Residents of Chistochina, Chitina, Copper Center, Gakona, Glennallen, Gulkana, Kenny Lake, Mentasta Lake, Tazlina, Tonsina, and Units 11 and 12.
11, remainder	Brown Bear	Residents of Chistochina, Chitina, Copper Center, Gakona, Glennallen, Gulkana, Kenny Lake, Mentasta Lake, Tazlina, Tonsina, and Unit 11.
11, north of the Sanford River	Caribou	Residents of Units 11, 12, and 13 (A)–(D) and the residents of Chickaloon and Dot Lake.
11, remainder	Caribou	Residents of Units 11 and 13 (A)–(D) and the residents of Chickaloon.
11	Goat	Residents of Unit 11 and the residents of Chitina, Chistochina, Copper Center, Gakona, Glennallen, Gulkana, Mentasta Lake, Tazlina, Tonsina, and Dot Lake.
11, north of the Sanford River	Moose	Residents of Units 11, 12, and 13 (A)–(D) and the residents of Chickaloon and Dot Lake.
11, remainder	Moose	Residents of Unit 11 and Unit 13 (A) –(D) and the residents of Chickaloon.
11, north of the Sanford River	Sheep	Residents of Unit 12 and the communities and areas of Chistochina, Chitina, Copper Center, Dot Lake, Gakona, Glennallen, Gulkana, Kenny Lake, Mentasta Lake, Slana, McCarthy/South Wrangell/South Park, Tazlina and Tonsina; Residents along the Nabesna Road—Milepost 0–46 (Nabesna Road), and residents along the McCarthy Road—Milepost 0–62 (McCarthy Road).
11, remainder 11	Sheep	Residents of the communities and areas of Chisana, Chistochina, Chitina, Copper Center, Gakona, Glennallen, Gulkana, Kenny Lake, Mentasta Lake, Slana, McCarthy/South Wrangell/South Park, Tazlina and Tonsina; Residents along the Tok Cutoff—Milepost 79–110 (Mentasta Pass), residents along the Nabesna Road—Milepost 0–46 (Nabesna Road), and residents along the McCarthy Road—Milepost 0–62 (McCarthy Road).
11	Wolf	Residents of Units 6, 9, 10 (Unimak Island only), 11–13 and the residents of Chickaloon and 16–26.
11	Grouse (Spruce, Blue, Ruffed and Sharp-tailed).	Residents of Units 11, 12, 13 and the residents of Chickaloon, 15, 16, 20(D), 22 and 23.

Area	Species	Determination
11	Ptarmigan (Rock, Willow and White-tailed).	Residents of Units 11, 12, 13 and the residents of Chickaloon, 15, 16, 20(D), 22 and 23.
Unit 12	Brown Bear	Residents of Unit 12 and Dot Lake, Chistochina, Gakona, Mentasta Lake, and Slana.
12	Caribou	Residents of Unit 12 and residents of Dot Lake, Healy Lake, and Mentasta Lake.
12, South of a line from Noyes Mountain, southeast of the confluence of Tatschunda Creek to Nabesna River.	Moose	Residents of Unit 11 north of 62nd parallel (excluding North Slana Homestead and South Slana Homestead); and residents of Unit 12, 13(A)–(D) and the residents of Chickaloon, Dot Lake, and Healy Lake.
12, East of the Nabesna River and Nabesna Glacier, south of the Winter Trail from Pickerel Lake to the Canadian Border.	Moose	Residents of Unit 12 and Healy Lake.
12, Remainder	Moose	Residents of Unit 12 and residents of Dot Lake, Healy Lake, and Mentasta Lake.
12	Sheep	Residents of Unit 12 and residents of Chistochina, Dot Lake, Healy Lake, and Mentasta Lake.
12	Wolf	Residents of Units 6, 9, 10 (Unimak Island only), 11–13 and the residents of Chickaloon and 16–26.
Unit 13	Brown Bear	Residents of Unit 13.
13(B)	Caribou	Residents of Units 11, 12 (along the Nabesna Road), 13, residents of Unit 20(D) except Fort Greely, and the residents of Chickaloon.
13(C)	Caribou	Residents of Units 11, 12 (along the Nabesna Road), 13, and the residents of Chickaloon, Dot Lake and Healy Lake.
13(A) & (D)	Caribou	Residents of Units 11, 12 (along the Nabesna Road), 13, and the residents of Chickaloon.
13(E)	Caribou	Residents of Units 11, 12 (along the Nabesna Road), 13, and the residents of Chickaloon, McKinley Village, and the area along the Parks Highway between milepost 216 and 239 (except no subsistence for residents of Denali National Park headquarters).
13(D)	Goat	No Federal subsistence priority.
13(A), (B), and (D)	Moose	Residents of Unit 13 and the residents of Chickaloon.
13(C)	Moose	Residents of Units 12, 13 and the residents of Chickaloon and Dot Lake.
13(E)	Moose	Residents of Unit 13 and the residents of Chickaloon and of McKinley Village, and the area along the Parks Highway between milepost 216 and 239 (except no subsistence for residents of Denali National Park headquarters).
13(D)	Sheep	No Federal subsistence priority.
13	Wolf	Residents of Units 6, 9, 10 (Unimak Island only), 11–13 and the residents of Chickaloon, and 16–26.
13	Grouse (Spruce, Blue, Ruffed & Sharp-tailed).	Residents of Units 11, 13 and the residents of Chickaloon, 15, 16, 20(D), 22 & 23.
13	Ptarmigan (Rock, Willow and White-tailed).	Residents of Units 11, 13 and the residents of Chickaloon, 15, 16, 20(D), 22 & 23.
Unit 14(B) and (C)	Brown Bear	No Federal subsistence priority.
14	Goat	No Federal subsistence priority.
14	Moose	No Federal subsistence priority.
14(A) and (C)	Sheep	No Federal subsistence priority.
Unit 15(C)	Black Bear	Residents of Port Graham and Nanwalek only.
15, Remainder	Black Bear	No Federal subsistence priority.
15	Brown Bear	No Federal subsistence priority.
15(C), Port Graham and English Bay hunt areas.	Goat	Residents of Port Graham and Nanwalek.
15(C), Seldovia hunt area.	Goat	Residents Seldovia area.
15	Moose	Residents of Ninilchik, Nanwalek, Port Graham, and Seldovia.
15	Sheep	No Federal subsistence priority.
15	Ptarmigan (Rock, Willow and White-tailed).	Residents of Unit 15.
15	Grouse (Spruce)	Residents of Unit 15.
15	Grouse (Ruffed)	No Federal subsistence priority.
Unit 16(B)	Black Bear	Residents of Unit 16(B).
16	Brown Bear	No Federal subsistence priority.
16(A)	Moose	No Federal subsistence priority.
16(B)	Moose	Residents of Unit 16(B).
16	Sheep	No Federal subsistence priority.
16	Wolf	Residents of Units 6, 9, 10 (Unimak Island only), 11–13 and the residents of Chickaloon, and 16–26.
16	Grouse (Spruce, Blue, Ruffed and Sharp-tailed).	Residents of Units 11, 13 and the residents of Chickaloon, 15, 16, 20(D), 22 and 23.

Area	Species	Determination
16	Ptarmigan (Rock, Willow and White-tailed).	Residents of Units 11, 13 and the residents of Chickaloon, 15, 16, 20(D), 22 and 23.
Unit 17(A) and that portion of 17(B) draining into Nuyakuk Lake and Tikchik Lake.	Black Bear	Residents of Units 9(A) and (B), 17, and residents of Akaik and Akiachak.
17, remainder	Black Bear	Residents of Units 9(A) and (B), and 17.
17(A)	Brown Bear	Residents of Unit 17, and residents of Akiak, Akiachak, Goodnews Bay and Platinum.
17(A) and (B) Those portions north and west of a line beginning from the Unit 18 boundary at the northwest end of Nenevok Lake, to the southern point of upper Togiak Lake, and northeast to the northern point of Nuyakuk Lake, northeast to the point where the Unit 17 boundary intersects the Shotgun Hills.	Brown Bear	Residents of Kwethluk.
17(B), that portion draining into Nuyakuk Lake and Tikchik Lake.	Brown Bear	Residents of Akaik and Akiachak.
17(B) and (C)	Brown Bear	Residents of Unit 17.
17	Caribou	Residents of Units 9(B), 17 and residents of Lime Village and Stony River.
17(A) and (B) Those portions north and west of a line beginning from the Unit 18 boundary at the northwest end of Nenevok Lake, to the southern point of upper Togiak Lake, and northeast to the northern point of Nuyakuk Lake, northeast to the point where the Unit 17 boundary intersects the Shotgun Hills.	Caribou	Residents of Kwethluk.
17(A) and (B) Those portions north and west of a line beginning from the Unit 18 boundary at the northwest end of Nenevok Lake, to the southern point of upper Togiak Lake, and northeast to the northern point of Nuyakuk Lake, northeast to the point where the Unit 17 boundary intersects the Shotgun Hills.	Moose	Residents of Kwethluk.
17(A)	Moose	Residents of Unit 17 and residents of Goodnews Bay and Platinum; however, no subsistence for residents of Akiachak, Akiak and Quinhagak.
17(B) and (C)	Moose	Residents of Unit 17, and residents of Nondalton, Levelock, Goodnews Bay and Platinum.
17	Wolf	Residents of Units 6, 9, 10 (Unimak Island only), 11–13 and the residents of Chickaloon, and 16–26.
17	Beaver	Residents of Units 9(A), (B), (C), (E), and 17.
Unit 18	Black Bear	Residents of Unit 18, residents of Unit 19(A) living downstream of the Holokuk River, and residents of Holy Cross, Stebbins, St. Michael, Twin Hills, and Togiak.
18	Brown Bear	Residents of Akiachak, Akiak, Eek, Goodnews Bay, Kwethluk, Mt. Village, Napaskiak, Platinum, Quinhagak, St. Mary's, and Tuluksak.
18	Caribou (Kilbuck caribou herd only).	INTERIM DETERMINATION BY FEDERAL SUBSISTENCE BOARD (12/18/91): residents of Tuluksak, Akiak, Akiachak, Kwethluk, Bethel, Oscarville, Napaskiak, Napakiak, Kasigluk, Atmanthluak, Nunapitchuk, Tuntutliak, Eek, Quinhagak, Goodnews Bay, Platinum, Togiak, and Twin Hills.
18 North of the Yukon River	Caribou (except Kilbuck caribou herd).	Residents of Alakanuk, Andreafsky, Chevak, Emmonak, Hooper Bay, Kotlik, Kwethluk, Marshall, Mountain Village, Pilot Station, Pitka's Point, Russian Mission, St. Mary's, St. Michael, Scammon Bay, Sheldon Point, and Stebbins.
18, Remainder	Caribou (except Kilbuck caribou herd).	Residents of Kwethluk.
18, that portion of the Yukon River drainage upstream of Russian Mission and that portion of the Kuskokwim River drainage upstream of, but not including the Tuluksak River drainage.	Moose	Residents of Unit 18 and residents of Upper Kalskag, Lower Kalskag, Aniak, and Chuathbaluk.
18, remainder	Moose	Residents of Unit 18 and residents of Upper Kalskag and Lower Kalskag.
18	Muskox	No Federal subsistence priority.
18	Wolf	Residents of Units 6, 9, 10 (Unimak Island only), 11–13 and the residents of Chickaloon and 16–26.
Unit 19(C),(D)	Bison	No Federal subsistence priority.

Area	Species	Determination
19(A) and (B)	Brown Bear	Residents of Unit 19 and 18 within the Kuskokwim River drainage upstream from, and including, the Johnson River.
19(C)	Brown Bear	No Federal subsistence priority.
19(D)	Brown Bear	Residents of Unit 19(A) and (D), and residents of Tulusak and Lower Kalskag.
19(A) and (B)	Caribou	Residents of Units 19(A) and 19(B), residents of Unit 18 within the Kuskokwim River drainage upstream from, and including, the Johnson River, and residents of St. Marys, Marshall, Pilot Station, Russian Mission.
19(C)	Caribou	Residents of Unit 19(C), and residents of Lime Village, McGrath, Nikolai, and Telida.
19(D)	Caribou	Residents of Unit 19(D), and residents of Lime Village, Sleetmute and Stony River.
19(A) and (B)	Moose	Residents of Unit 18 within Kuskokwim River drainage upstream from and including the Johnson River, and Unit 19.
19(C)	Moose	Residents of Unit 19.
19(D)	Moose	Residents of Unit 19 and residents of Lake Minchumina.
19	Wolf	Residents of Units 6, 9, 10 (Unimak Island only), 11–13 and the residents of Chickaloon and 16–26.
Unit 20(D)	Bison	No Federal subsistence priority.
20(F)	Black Bear	Residents of Unit 20(F)and residents of Stevens Village and Manley.
20(E)	Brown Bear	Residents of Unit 12 and Dot Lake.
20(F)	Brown Bear	Residents of Unit 20(F)and residents of Stevens Village and Manley.
20(A)	Caribou	Residents of Cantwell, Nenana, and those domiciled between milepost 216 and 239 of the Parks Highway. No subsistence priority for residents of households of the Denali National Park Headquarters.
20(B)	Caribou	Residents of Unit 20(B), Nenana, and Tanana.
20(C)	Caribou	Residents of Unit 20(C) living east of the Teklanika River, residents of Cantwell, Lake Minchumina, Manley Hot Springs, Minto, Nenena, Nikolai, Tanana, Talida, and those domiciled between milepost 216 and 239 of the Parks Highway and between milepost 300 and 309. No subsistence priority for residents of households of the Denali National Park Headquarters.
20(D) and (E)	Caribou	Residents of 20(D), 20(E) and Unit 12 north of the Wrangell-St. Elias National Park and Preserve.
20(F)	Caribou	Residents of 20(F), 25(D), and Manley.
20(A)	Moose	Residents of Cantwell, Minto, and Nenana, McKinley Village, the area along the Parks Highway between mileposts 216 and 239, except no subsistence for residents of households of the Denali National Park Headquarters.
20(B)	Moose	Minto Flats Management Area—residents of Minto and Nenana.
20(B)	Moose	Remainder—residents of Unit 20(B), and residents of Nenana and Tanana.
20(C)	Moose	Residents of Unit 20(C) (except that portion within Denali National Park and Preserve and that portion east of the Teklanika River), and residents of Cantwell, Manley, Minto, Nenana, the Parks Highway from milepost 300–309, Nikolai, Tanana, Telida, McKinley Village, and the area along the Parks Highway between mileposts 216 and 239. No subsistence for residents of households of the Denali National Park Headquarters.
20(D)	Moose	Residents of Unit 20(D) and residents of Tanacross.
20(F)	Moose	Residents of Unit 20(F), Manley, Minto and Stevens Village.
20(F)	Wolf	Residents of Unit 20(F), and residents of Stevens Village and Manley.
20, remainder	Wolf	Residents of Units 6, 9, 10 (Unimak Island only), 11–13 and the residents of Chickaloon and 16–26.
20(D)	Grouse, (Spruce, Blue, Ruffed and Sharp-tailed).	Residents of Units 11, 13 and the residents of Chickaloon, 15, 16, 20(D), 22 and 23.
20(D)	Ptarmigan (Rock, Willow and White-tailed).	Residents of Units 11, 13 and the residents of Chickaloon, 15, 16, 20(D), 22 and 23.
Unit 21	Brown Bear	Residents of Unit 21 and 23.
21(A)	Caribou	Residents of Unit 21(A), 21(D), 21(E) and Aniak, Chuathbaluk, Crooked Creek, McGrath, and Takotna.
21(B) & (C)	Caribou	Residents of Unit 21(B), 21(C), 21(D), and Tanana.
21(D)	Caribou	Residents of Unit 21(B), 21(C), 21(D), and Huslia.
21(E)	Caribou	Residents of Unit 21(A), 21(E) and Aniak, Chuathbaluk, Crooked Creek, McGrath, and Takotna.
21(A)	Moose	Residents of Unit 21(A), (E), Takotna, McGrath, Aniak and Crooked Creek.
21(B) and (C)	Moose	Residents of Unit 21(B) and (C), residents of Tanana, Ruby, and Galena.
21(D)	Moose	Residents of Unit 21(D), and residents of Huslia and Ruby.
21(E)	Moose	Residents of Unit 21(E) and residents of Russian Mission.
21	Wolf	Residents of Units 6, 9, 10 (Unimak Island only), 11–13 and the residents of Chickaloon, and 16–26.
Unit 22(A)	Black Bear	Residents of Unit 22(A) and Koyuk.
22(B)	Black Bear	Residents of Unit 22(B).
22(C), (D), and (E)	Black Bear	No Federal subsistence priority.
22	Brown Bear	Residents of Unit 22.

Area	Species	Determination
22(A)	Caribou	Residents of Unit 21(D) west of the Koyukuk and Yukon Rivers, and residents of Units 22 (except residents of St. Lawrence Island), 23, 24, and residents of Kotlik, Emmonak, Hooper Bay, Scammon Bay, Chevak, Marshall, Mountain Village, Pilot Station, Pitka's Point, Russian Mission, St. Mary's, Sheldon Point, and Alakanuk.
22, Remainder	Caribou	Residents of Unit 21(D) west of the Koyukuk and Yukon Rivers, and residents of Units 22 (except residents of St. Lawrence Island), 23, 24.
22	Moose	Residents of Unit 22.
22(B)	Muskox	Residents of Unit 22(B).
22(C)	Muskox	Residents of Unit 22(C).
22(D)	Muskox	Residents of Unit 22(D) excluding St. Lawrence Island.
22(E)	Muskox	Residents of Unit 22(E) excluding Little Diomede Island.
22	Wolf	Residents of Units 23, 22, 21(D) north and west of the Yukon River, and residents of Kotlik.
22	Grouse (Spruce, Blue, Ruffed and Sharp-tailed).	Residents of Units 11, 13 and the residents of Chickaloon, 15, 16, 20(D), 22 and 23.
22	Ptarmigan (Rock, Willow and White-tailed).	Residents of Units 11, 13 and the residents of Chickaloon, 15, 16, 20(D), 22 and 23.
Unit 23	Black Bear	Residents of Unit 23, Alatna, Allakaket, Bettles, Evansville, Galena, Hughes, Huslia, and Koyukuk.
23	Brown Bear	Residents of Units 21 and 23.
23	Caribou	Residents of Unit 21(D) west of the Koyukuk and Yukon Rivers, residents of Galena, and residents of Units 22, 23, 24 including residents of Wiseman but not including other residents of the Dalton Highway Corridor Management Area, and 26(A).
23	Moose	Residents of Unit 23.
23 South of Kotzebue Sound and west of and including the Buckland River drainage.	Muskox	Residents of Unit 23 South of Kotzebue Sound and west of and including the Buckland River drainage.
23, Remainder	Muskox	Residents of Unit 23 east and north of the Buckland River drainage.
23	Sheep	Residents of Point Lay and Unit 23 north of the Arctic Circle.
23	Wolf	Residents of Units 6, 9, 10 (Unimak Island only), 11–13 and the residents of Chickaloon, and 16–26.
23	Grouse (Spruce, Blue, Ruffed and Sharp-tailed).	Residents of Units 11, 13 and the residents of Chickaloon, 15, 16, 20(D), 22 and 23.
23	Ptarmigan (Rock, Willow and White-tailed).	Residents of Units 11, 13 and the residents of Chickaloon, 15, 16, 20(D), 22 and 23.
Unit 24, that portion south of Caribou Mountain, and within the public lands composing or immediately adjacent to the Dalton Highway Corridor Management Area.	Black Bear	Residents of Stevens Village and residents of Unit 24 and Wiseman, but not including any other residents of the Dalton Highway Corridor Management Area.
24, remainder	Black Bear	Residents of Unit 24 and Wiseman, but not including any other residents of the Dalton Highway Corridor Management Area.
24, that portion south of Caribou Mountain, and within the public lands composing or immediately adjacent to the Dalton Highway Corridor Management Area.	Brown Bear	Residents of Stevens Village and residents of Unit 24 and Wiseman, but not including any other residents of the Dalton Highway Corridor Management Area.
24, remainder	Brown Bear	Residents of Unit 24 including Wiseman, but not including any other residents of the Dalton Highway Corridor Management Area.
24	Caribou	Residents of Unit 24 including Wiseman, but not including any other residents of the Dalton Highway Corridor Management Area; residents of Galena, Kobuk, Koyukuk, Stevens Village, and Tanana.
24	Moose	Residents of Unit 24, and residents of Koyukuk and Galena.
24	Sheep	Residents of Unit 24 residing north of the Arctic Circle and residents of Allakaket, Alatna, Hughes, and Huslia.
24	Wolf	Residents of Units 6, 9, 10 (Unimak Island only), 11–13 and the residents of Chickaloon and 16–26.
Unit 25(D)	Black Bear	Residents of Unit 25(D).
25(D)	Brown Bear	Residents of Unit 25(D).
25, remainder	Brown Bear	No Federal subsistence priority.
25(D)	Caribou	Residents of 29(F), 25(D), and Manley.
25(A)	Moose	Residents of Unit 25(A) and 25(D).
25(D) West	Moose	Residents of Beaver, Birch Creek and Stevens Village.
25(D), Remainder	Moose	Residents of Remainder of Unit 25.
25(A)	Sheep	Residents of Arctic Village, Chalkytsik, Fort Yukon, Kaktovik and Venetie.
25(B) and (C)	Sheep	No Federal subsistence priority.
25(D)	Wolf	Residents of Unit 25(D).

Area	Species	Determination
25, remainder	Wolf	Residents of Units 6, 9, 10 (Unimak Island only), 11–13 and the residents of Chickaloon and 16–26.
Unit 26	Brown Bear	Residents of Unit 26 (except the Prudhoe Bay-Deadhorse Industrial Complex) and residents of Anaktuvuk Pass and Point Hope.
26(A)	Caribou	Residents of Unit 26 and the residents of Anaktuvuk Pass and Point Hope.
26(B)	Caribou	Residents of Unit 26 and the residents of Anaktuvuk Pass, Point Hope, and Wiseman.
26(C)	Caribou	Residents of Unit 26 and the residents of Anaktuvuk Pass and Point Hope.
26	Moose	Residents of Unit 26, (except the Prudhoe Bay-Deadhorse Industrial Complex), and residents of Point Hope and Anaktuvuk Pass.
26(A)	Muskox	Residents of Anaktuvuk Pass, Atqasuk, Barrow, Nuiqsut, Point Hope, Point Lay, and Wainwright.
26(B)	Muskox	Residents of Anaktuvuk Pass, Nuiqsut, and Kaktovik.
26(C)	Muskox	Residents of Kaktovik.
26(A)	Sheep	Residents of Unit 26, Anaktuvuk Pass, and Point Hope.
26(B)	Sheep	Residents of Unit 26, Anaktuvuk Pass, Point Hope, and Wiseman.
26(C)	Sheep	Residents of Unit 26, Anaktuvuk Pass, Arctic Village, Chalkytsik, Fort Yukon, Point Hope, and Venetie.
26	Wolf	Residents of Units 6, 9, 10 (Unimak Island only), 11–13 and the residents of Chickaloon and 16–26.
(2) Fish and Shellfish Determinations		
KOTZEBUE-NORTHERN AREA—Northern District.	All finfish	Residents of the Northern District, except for those domiciled in State of Alaska Unit 26–B.
Kotzebue District	Salmon, sheefish, char.	Residents of the Kotzebue District.
NORTON SOUND—PORT CLARENCE AREA.	Salmon	Residents of the Norton Sound-Port Clarence Area.
YUKON AREA	Salmon	Residents of the Yukon Area, including the community of Stebbins.
	Yukon River Fall chum salmon.	Residents of the Yukon River drainage, including the communities of Stebbins, Scammon Bay, Hooper Bay, and Chevak.
	Freshwater fish species, including sheefish, whitefish, lamprey, burbot, sucker, grayling, pike, char, and blackfish.	Residents of the Yukon Area.
KUSKOKWIM AREA	Salmon	Residents of the Kuskokwim Area, except those persons residing on the United States military installation located on Cape Newenham, Sparevohn USAFB, and Tatalina USAFB.
	Rainbow trout	Residents of the communities of Quinhagak, Goodnews Bay, Kwethluk, Eek, Akiak, and Platinum.
	Pacific cod	Residents of the communities of Chevak, Newtok, Tununak, Toksook Bay, Nightmute, Chefornak, Kipnuk, Mekoryuk, Kwigillingok, Kongiganak, Eek, and Tuntutuliak.
Waters adjacent to the western-most tip of the Naskonant Peninsula and the terminus of the Ishowik River and around Nunivak Island.	Herring and herring roe.	Residents within 20 miles of the coast between the westernmost tip of the Naskonant Peninsula and the terminus of the Ishowik River and on Nunivak Island.
BRISTOL BAY AREA—Nushagak District, including drainages flowing into the district.	Salmon	Residents of the Nushagak District and freshwater drainages flowing into the district.
Naknek-Kvichek District—Naknek River drainage.	Salmon	Residents of the Naknek and Kvichak River drainages.
Naknek-Kvichek District—Iliamna-Lake Clark drainage.	Salmon	Residents of the Iliamna-Lake Clark drainage.
Togiak District, including drainages flowing into the district.	Salmon and other freshwater finfish.	Residents of the Togiak District, freshwater drainages flowing into the district, and the community of Manokotak.
KODIAK AREA—except the Mainland District, which is all waters along the southside of the Alaska Peninsula bounded by the latitude of Cape Douglas (58° 52′ North latitude) midstream Shelikof Strait, and west of the longitude of the southern entrance of Imuya Bay near Kilokak Rocks (57°11′22″ North latitude, 156°20′30″ W longitude).	Salmon	Residents of the Kodiak Island Borough, except those residing on the Kodiak Coast Guard Base.

Area	Species	Determination
KODIAK AREA—except the Semidi Island, the North Mainland, and the South Mainland Sections	King crab	Residents of the Kodiak Island Borough except those residents on the Kodiak Coast Guard base.
COOK INLET AREA—Port Graham Subdistrict.	Dolly Varden	Residents of Port Graham and English Bay.
Port Graham Subdistrict and Koyuktolik Subdistrict.	Salmon	Residents of Port Graham and English Bay.
Tyonek Subdistrict	Salmon	Residents of the village of Tyonek.
PRINCE WILLIAM SOUND AREA—South-Western District and Green Island.	Salmon	Residents of the Southwestern District which is mainland waters from the outer point on the north shore of Granite Bay to Cape Fairfield, and Knight Island, Chenega Island, Bainbridge Island, Evans Island, Elrington Island, Latouche Island and adjacent islands.
PRINCE WILLIAM SOUND AREA—North of a line from Porcupine Point to Granite Point, and south of a line from Point Lowe to Tongue Point.	Salmon	Residents of the villages of Tatitlek and Ellamar.
YAKUTAT AREA—Freshwater upstream from the terminus of streams and rivers of the Yakutat Area from the Doame River to the Tsiu River.	Salmon	Residents of the area east of Yakutat Bay, including the islands within Yakutat Bay, west of the Situk River drainage, and south of and including Knight Island.
Freshwater upstream from the terminus of streams and rivers of the Yakutat Area from the Doame River to Point Manby.	Dolly Varden char, steelhead trout, and smelt.	Residents of the area east of Yakutat Bay, including the islands within Yakutat Bay, west of the Situk River drainage, and south of and including Knight Island.
SOUTH-EASTERN ALASKA AREA—District 1—Section 1–E in waters of the Naha River and Roosevelt Lagoon.	Salmon and Dolly Varden char.	Residents of the City of Saxman.
District 1—Section 1–F in Boca de Quadra in waters of Sockeye Creek and Hugh Smith Lake within 500 yards of the terminus of Sockeye Creek	Salmon and Dolly Varden char.	Residents of the City of Saxman.
District 2—North of the latitude of the northern-most tip of Chasina Point and west of a line from the northern-most tip of Chasina Point to the eastern-most tip of Grindall Island to the eastern-most tip of the Kasaan Peninsula	Salmon and Dolly Varden char.	Residents of the City of Kasaan and in the drainage of the southeastern shore of the Kasaan Peninsula west of 132° 20′ W. long. and east of 132° 25′ W. long.
District 3—Section 3–A	Salmon and Dolly Varden char.	Residents of the townsite of Hydaburg.
District 3—Section 3–B in waters east of a line from Point Ildefonso to Tranquil Point.	Salmon, Dolly Varden char, and steelhead trout.	Residents of the City of Klawock and on Prince of Wales Island within the boundaries of the Klawock Heenya Corporation land holdings as they exist in January 1989, and those residents of the City of Craig and on Prince of Wales Island within the boundaries of the Shan Seet Corporation land holdings as they exist in January 1989.
District 3—Section 3–C in waters of Sarkar Lakes.	Salmon, Dolly Varden char, and steelhead trout.	Residents of the City of Klawock and on Prince of Wales Island within the boundaries of the Klawock Heenya Corporation land holdings as they exist in January 1989, and those residents of the City of Craig and on Prince of Wales Island within the boundaries of the Shan Seet Corporation land holdings as they exist in January 1989.
District 5—North of a line from Point Barrie to Boulder Point.	Salmon and Dolly Varden char.	Residents of the City of Kake and in Kupreanof Island drainages emptying into Keku Strait south of Point White and north of the Portage Bay boat harbor.
District 9—Section 9–A	Salmon and Dolly Varden char.	Residents of the City of Kake and in Kupreanof Island drainages emptying into Keku Strait south of Point White and north of the Portage Bay boat harbor.
District 9—Section 9–B north of the latitude of Swain Point.	Salmon and Dolly Varden char.	Residents of the City of Kake and in Kupreanof Island drainages emptying into Keku Strait south of Point White and north of the Portage Bay boat harbor.
District 10—West of a line from Pinta Point to False Point Pybus.	Salmon and Dolly Varden char.	Residents of the City of Kake and in Kupreanof Island drainages emptying into Keku Strait south of Point White and north of the Portage Bay boat harbor.
District 12—South of a line from Fishery Point to south Passage Point and north of the latitude of Point Caution.	Salmon and Dolly Varden char.	Residents of the City of Angoon and along the western shore of Admiralty Island north of the latitude of Sand Island, south of the latitude of Thayer Creek, and west of 134° 30′ W. long., including Killisnoo Island.
District 13—Section 13–A south of the latitude of Cape Edward.	Sockeye salmon	Residents of the City and Borough of Sitka in drainages which empty into Section 13–B north of the latitude of Dorothy Narrows.
District 13—Section 13–B north of the latitude of Redfish Cape.	Sockeye salmon	Residents of the City and Borough of Sitka in drainages which empty into Section 13–B north of the latitude of Dorothy Narrows.
District 13—Section 13–C	Sockeye salmon	Residents of the City and Borough of Sitka in drainages which empty into Section 13–B north of the latitude of Dorothy Narrows.
District 13—Section 13–C east of the longitude of Point Elizabeth.	Salmon and Dolly Varden char.	Residents of the City of Angoon and along the western shore of Admiralty Island north of the latitude of Sand Island, south of the latitude of Thayer Creek, and west of 134° 30′ W. long., including Killisnoo Island.

Area	Species	Determination
District 14—Section 14–B and 14–C	Salmon smelt and Dolly Varden char.	Residents of the City of Hoonah and in Chichagof Island drainages on the eastern shore of Port Frederick from Gartina Creek to Point Sophia.
District 15—Chilkat and Chilkoot Rivers	Salmon and smelt ..	Residents west of the Haines highway between Mile 20 and Mile 24 and east of the Chilkat River, but not elsewhere in Klukwan; and, those residents of other areas of the city and borough of Haines, excluding residents in the drainage of Excursion Inlet. Hai of Haines, excluding residents in the drainage of Excursion Inlet.

(b) [Reserved]

Subpart D—Subsistence Taking of Fish and Wildlife

3. In Subpart D of 36 CFR part 242 and 50 CFR part 100, § ____.25 is added effective July 1, 1998, through June 30, 1999, to read as follows:

§ ____.25 Subsistence taking of wildlife.

(a) Definitions. The following definitions shall apply to all regulations contained in this section:

ADF&G means the Alaska Department of Fish and Game.

Aircraft means any kind of airplane, glider, or other device used to transport people or equipment through the air, excluding helicopters.

Airport means an airport listed in the Federal Aviation Administration, Alaska Airman's Guide and chart supplement.

Animal means those species with a vertebral column (backbone).

Antler means one or more solid, horn-like appendages protruding from the head of a caribou, deer, or moose.

Antlered means any caribou, deer, or moose having at least one visible antler.

Antlerless means any caribou, deer, or moose not having visible antlers attached to the skull.

Bear means black bear, or brown or grizzly bear.

Bow means a longbow, recurve bow, or compound bow, excluding a crossbow, or any bow equipped with a mechanical device that holds arrows at full draw.

Broadhead means an arrowhead that is not barbed and has two or more steel cutting edges having a minimum cutting diameter of not less than seven-eighths inch.

Brow tine means a tine on the front portion of a moose antler, typically projecting forward from the base of the antler toward the nose.

Buck means any male deer.

Bull means any male moose, caribou, or musk oxen.

Closed season means the time when wildlife may not be taken.

Cub bear means a brown or grizzly bear in its first or second year of life, or a black bear (including cinnamon and blue phases) in its first year of life.

Designated hunter means a Federally qualified, licensed hunter who may take all or a portion of another Federally qualified, licensed hunter's harvest limit(s) only under situations approved by the Board.

Edible meat means the breast meat of ptarmigan and grouse, and, those parts of black bear, brown and grizzly bear, caribou, deer, mountain goat, moose, musk oxen, and Dall sheep that are typically used for human consumption which are: the meat of the ribs, neck, brisket, front quarters as far as the juncture of the humerus and radius-ulna (elbow), hindquarters as far as the distal joint (bottom) of the tibia-fibula (hock) and that portion of the animal between the front and hindquarters; however, *edible meat* of species listed above does not include: meat of the head, meat that has been damaged and made inedible by the method of taking, bones, sinew, and incidental meat reasonably lost as a result of boning or close trimming of the bones, or viscera.

Federally-qualified subsistence user means a rural Alaska resident qualified to harvest fish or wildlife on Federal public lands in accordance with the Federal Subsistence Management Regulations in this part.

Fifty-inch (50-inch) moose means a bull moose with an antler spread of 50 inches or more.

Full curl horn means the horn of a Dall sheep ram; the tip of which has grown through 360 degrees of a circle described by the outer surface of the horn, as viewed from the side, or that both horns are broken, or that the sheep is at least 8 years of age as determined by horn growth annuli.

Furbearer means a beaver, coyote, arctic fox, red fox, lynx, marten, mink, weasel, muskrat, river (land) otter, red squirrel, flying squirrel, ground squirrel, marmot, wolf or wolverine.

Grouse collectively refers to all species found in Alaska, including spruce grouse, ruffed grouse, blue grouse and sharp-tailed grouse.

Hare or hares collectively refers to all species of hares (commonly called rabbits) in Alaska and includes snowshoe hare and tundra hare.

Harvest limit means the number of any one species permitted to be taken by any one person in a Unit or portion of a Unit in which the taking occurs.

Highway means the driveable surface of any constructed road.

Household means that group of people residing in the same residence.

Hunting means the taking of wildlife within established hunting seasons with archery equipment or firearms, and as authorized by a required hunting license.

Marmot collectively refers to all species of marmot that occur in Alaska including the hoary marmot, Alaska marmot, and the woodchuck.

Motorized vehicle means a motor-driven land, air or water conveyance.

Open season means the time when wildlife may be taken by hunting or trapping; an open season includes the first and last days of the prescribed season period.

Otter means river or land otter only, excluding sea otter.

Permit hunt means a hunt for which State or Federal permits are issued by registration or other means.

Poison means any substance which is toxic, or poisonous upon contact or ingestion.

Possession means having direct physical control of wildlife at a given time or having both the power and intention to exercise dominion or control of wildlife either directly or through another person or persons.

Ptarmigan collectively refers to all species found in Alaska, including white-tailed ptarmigan, rock ptarmigan, and willow ptarmigan.

Ram means a male Dall sheep.

Registration permit means a permit which authorizes hunting and is issued to a person who agrees to the specified hunting conditions. Hunting permitted by a registration permit begins on an announced date and continues throughout the open season, or until the season is closed by Board action. Registration permits are issued in the order applications are received and/or are based on priorities as determined by 50 CFR 100.17 and 36 CFR 242.17.

Sealing means placing a mark or tag on a portion of a harvested animal by an

authorized representative of the ADF&G; *sealing* includes collecting and recording information about the conditions under which the animal was harvested, and measurements of the specimen submitted for sealing, or surrendering a specific portion of the animal for biological information.

Seven-eighths curl horn means the horn of a male Dall sheep, the tip of which has grown through seven-eights (315 degrees) of a circle, described by the outer surface of the horn, as viewed from the side, or with both horns broken.

Skin, hide, pelt or fur mean any tanned or untanned external covering of an animal's body; excluding bear. The skin, hide, fur or pelt of a bear shall mean the entire external covering with claws attached.

Spike-fork moose means a bull moose with only one or two tines on either antler; male calves are not spike-fork bulls.

Take or Taking means to pursue, hunt, shoot, trap, net, capture, collect, kill, harm, or attempt to engage in any such conduct.

Tine or antler point refers to any point on an antler, the length of which is greater than its width and is at least one inch.

Transportation means to ship, convey, carry or transport by any means whatever, and deliver or receive for such shipment, conveyance, carriage, or transportation.

Trapping means the taking of furbearers within established trapping seasons and with a required trapping license.

Unclassified wildlife or unclassified species means all species of animals not otherwise classified by the definitions in this paragraph (a), or regulated under other Federal law as listed in paragraph (i) of this section.

Ungulate means any species of hoofed mammal, including deer, caribou, moose, mountain goat, Dall sheep, and musk oxen.

Unit means one of the 26 geographical areas in the State of Alaska known as Game Management Units, or GMU, and collectively listed in this section as Units.

Wildlife means any hare (rabbit), ptarmigan, grouse, ungulate, bear, furbearer, or unclassified species and includes any part, product, egg, or offspring thereof, or carcass or part thereof.

(b) Wildlife may be taken for subsistence uses by any method, except as prohibited in this section or by other Federal statute. Taking wildlife for subsistence uses by a prohibited method is a violation of this part. Seasons are closed unless opened by Federal regulation. Hunting or trapping during a closed season or in an area closed by this part is prohibited.

(1) Except for special provisions found at paragraphs (k)(1) through (26) of this section, the following methods and means of taking wildlife for subsistence uses are prohibited:

(i) Shooting from, on, or across a highway;

(ii) Using any poison;

(iii) Using a helicopter in any manner, including transportation of individuals, equipment or wildlife; however, this prohibition does not apply to transportation of an individual, gear, or wildlife during an emergency rescue operation in a life threatening situation;

(iv) Taking wildlife from a motorized land or air vehicle, when that vehicle is in motion or from a motor-driven boat when the boat's progress from the motor's power has not ceased;

(v) Using a motorized vehicle to drive, herd, or molest wildlife;

(vi) Using or being aided by use of a machine gun, set gun, or a shotgun larger than 10 gauge;

(vii) Using a firearm other than a shotgun, muzzle-loaded rifle, rifle or pistol using center-firing cartridges, for the taking of ungulates, bear, wolves or wolverine, except that—

(A) An individual in possession of a valid trapping license may use a firearm that shoots rimfire cartridges to take wolves and wolverine;

(B) Only a muzzle-loading rifle of .54-caliber or larger, or a .45-caliber muzzle-loading rifle with a 250-grain, or larger, elongated slug may be used to take brown bear, black bear, moose, musk oxen and mountain goat;

(viii) Using or being aided by use of a pit, fire, artificial light, radio communication, artificial salt lick, explosive, barbed arrow, bomb, smoke, chemical, conventional steel trap with a jaw spread over nine inches, or conibear style trap with a jaw spread over 11 inches;

(ix) Using a snare, except that an individual in possession of a valid hunting license may use nets and snares to take unclassified wildlife, ptarmigan, grouse, or hares; and, individuals in possession of a valid trapping license may use snares to take furbearers;

(x) Using a trap to take ungulates or bear;

(xi) Using hooks to physically snag, impale or otherwise take wildlife; however, hooks may be used as a trap drag;

(xii) Using a crossbow in any area restricted to hunting by bow and arrow only to take ungulates, bear, wolf or wolverine;

(xiii) Taking of ungulates, bear, wolf, or wolverine with a bow, unless the bow is capable of casting a 7/8 inch wide broadhead-tipped arrow at least 175 yards horizontally, and the arrow and broadhead together weigh at least one ounce (437.5 grains);

(xiv) Using bait for taking ungulates, bear, wolf, or wolverine; except, bait may be used to take wolves and wolverine with a trapping license, and, bait may be used to take black bears with a hunting license as authorized in Unit-specific regulations at paragraphs (k)(1) through (26) of this section. Baiting of black bears is subject to the following restrictions:

(A) No person may establish a black bear bait station unless he or she first registers the site with ADF&G;

(B) A person using bait shall clearly mark the site with a sign reading ''black bear bait station'' that also displays the person's hunting license number and ADF&G assigned number;

(C) Only biodegradable materials may be used for bait; only the head, bones, viscera, or skin of legally harvested fish and wildlife may be used for bait;

(D) No person may use bait within one-quarter mile of a publicly maintained road or trail;

(E) No person may use bait within one mile of a house or other permanent dwelling, or within one mile of a developed campground, or developed recreational facility;

(F) A person using bait shall remove litter and equipment from the bait station site when hunting is completed;

(G) No person may give or receive remuneration for the use of a bait station, including barter or exchange of goods;

(H) No person may have more than two bait stations with bait present at any one time;

(xv) Taking swimming ungulates, bear, wolves or wolverine;

(xvi) Taking or assisting in the taking of ungulates, bear, wolves, wolverine, or other furbearers before 3:00 a.m. following the day in which airborne travel occurred (except for flights in regularly scheduled commercial aircraft); however this restriction does not apply to subsistence taking of deer;

(xvii) Taking a bear cub or a sow accompanied by cub(s).

(2) Wildlife taken in defense of life or property is not a subsistence use; wildlife so taken is subject to State regulations.

(3) The following methods and means of trapping furbearers, for subsistence uses pursuant to the requirements of a trapping license are prohibited, in addition to the prohibitions listed at paragraph (b)(1) of this section:

(i) Disturbing or destroying a den, except that any muskrat pushup or feeding house may be disturbed in the course of trapping;

(ii) Disturbing or destroying any beaver house;

(iii) Taking beaver by any means other than a steel trap or snare, except that firearms may be used in certain Units with established seasons as identified in Unit-specific regulations found in this subpart;

(iv) Taking otter with a steel trap having a jaw spread of less than five and seven-eighths inches during any closed mink and marten season in the same Unit;

(v) Using a net, or fish trap (except a blackfish or fyke trap);

(vi) Taking beaver in the Minto Flats Management Area with the use of an aircraft for ground transportation, or by landing within one mile of a beaver trap or set used by the transported person;

(vii) Taking or assisting in the taking of furbearers by firearm before 3:00 a.m. on the day following the day on which airborne travel occurred; however, this does not apply to a trapper using a firearm to dispatch furbearers caught in a trap or snare.

(c) Possession and transportation of wildlife. (1) Except as specified in paragraphs (c)(3)(ii) or (c)(4) of this section, or as otherwise provided, no person may take a species of wildlife in any Unit, or portion of a Unit, if that person's total take of that species already obtained anywhere in the State under Federal and State regulations equals or exceeds the harvest limit in that Unit.

(2) An animal taken under Federal or State regulations by any member of a community with an established community harvest limit for that species counts toward the community harvest limit for that species. Except for wildlife taken pursuant to § __.6(f)(3) or as otherwise provided for by this Part, an animal taken as part of a community harvest limit counts toward every community member's harvest limit for that species taken under Federal or State of Alaska regulations.

(3) Harvest limits. (i) Harvest limits, including those related to ceremonial uses, authorized by this section and harvest limits established in State regulations may not be accumulated.

(ii) Wildlife taken by a designated hunter for another person pursuant to § __.6(f)(2), counts toward the individual harvest limit of the person for whom the wildlife is taken.

(4) The harvest limit specified for a trapping season for a species and the harvest limit set for a hunting season for the same species are separate and distinct. This means that a person who has taken a harvest limit for a particular species under a trapping season may take additional animals under the harvest limit specified for a hunting season or vice versa.

(5) A brown/grizzly bear taken in a Unit or portion of a Unit having a harvest limit of one brown/grizzly bear per year counts against a one brown/grizzly bear every four regulatory years harvest limit in other Units; an individual may not take more than one brown/grizzly bear in a regulatory year.

(6) A harvest limit applies to the number of animals that can be taken during a regulatory year; however, harvest limits for grouse, ptarmigan, and caribou (in some Units) are regulated by the number that may be taken per day. Harvest limits of grouse and ptarmigan are also regulated by the number that can be held in possession.

(7) Unless otherwise provided, any person who gives or receives wildlife shall furnish, upon a request made by a Federal or State agent, a signed statement describing the following: names and addresses of persons who gave and received wildlife, the time and place that the wildlife was taken, and identification of species transferred. Where a qualified subsistence user has designated another qualified subsistence user to take wildlife on his or her behalf in accordance with § __.6, the permit shall be furnished in place of a signed statement.

(8) A rural Alaska resident who has been designated to take wildlife on behalf of another rural Alaska resident in accordance with § __.6, shall promptly deliver the wildlife to that rural Alaska resident.

(9) No person may possess, transport, give, receive or barter wildlife that was taken in violation of Federal or State statutes or a regulation promulgated thereunder.

(10) Evidence of sex and identity. (i) If subsistence take of Dall sheep is restricted to a ram, no person may possess or transport a harvested sheep unless both horns accompany the animal.

(ii) If the subsistence taking of an ungulate, except sheep, is restricted to one sex in the local area, no person may possess or transport the carcass of an animal taken in that area unless sufficient portions of the external sex organs remain attached to indicate conclusively the sex of the animal; however, this paragraph (c)(10)(ii) does not apply to the carcass of an ungulate that has been butchered and placed in storage or otherwise prepared for consumption upon arrival at the location where it is to be consumed.

(iii) If a moose harvest limit includes an antler size or configuration restriction, no person may possess or transport the moose carcass or its parts unless both antlers accompany the carcass or its parts. A person possessing a set of antlers with less than the required number of brow tines on one antler shall leave the antlers naturally attached to the unbroken, uncut skull plate; however, this paragraph (c)(10)(iii) does not apply to a moose carcass or its parts that have been butchered and placed in storage or otherwise prepared for consumption after arrival at the place where it is to be stored or consumed.

(11) All edible meat from caribou and moose harvested in Units 9(B), 17 and 19(B) prior to October 1 must remain on the bones of the front quarters and hind quarters until the meat is removed from the field or is processed for human consumption.

(d) A person who takes an animal that has been marked or tagged for scientific studies must, within a reasonable time, notify the ADF&G or the agency identified on the collar or marker, when and where the animal was taken. Any ear tag, collar, radio, tattoo, or other identification must be retained with the hide until it is sealed, if sealing is required; in all cases, any identification equipment must be returned to the ADF&G or to an agency identified on such equipment.

(e) Sealing of bear skins and skulls. (1) Sealing requirements for bear shall apply to brown bears taken in all Units, except as specified below, and black bears of all color phases taken in Units 1–7, 11–17, and 20.

(2) No person may possess or transport from Alaska, the untanned skin or skull of a bear unless the skin and skull have been sealed by an authorized representative of ADF&G in accordance with State or Federal regulations, except that the skin and skull of a brown bear taken under a registration permit in the Western Alaska Brown Bear Management Area, the Northwest Alaska Brown Bear Management Area, Unit 5, or Unit 9(B) need not be sealed unless removed from the area.

(3) A person who possesses a bear shall keep the skin and skull together until a representative of the ADF&G has removed a rudimentary premolar tooth from the skull and sealed both the skull and the skin; however, this provision shall not apply to brown bears taken within the Western Alaska Brown Bear Management Area, the Northwest Alaska Brown Bear Management Area, Unit 5, or Unit 9(B) which are not

removed from the Management Area or Unit.

(i) In areas where sealing is required by Federal regulations, no person may possess or transport the hide of a bear which does not have the penis sheath or vaginal orifice naturally attached to indicate conclusively the sex of the bear.

(ii) If the skin or skull of a bear taken in the Western Alaska Brown Bear Management Area is removed from the area, it must first be sealed by an ADF&G representative in Bethel, Dillingham, or McGrath; at the time of sealing, the ADF&G representative shall remove and retain the skin of the skull and front claws of the bear.

(iii) If the skin or skull of a bear taken in the Northwestern Alaska Brown Bear Management Area is removed from the area or presented for commercial tanning within the Management Area, it must first be sealed by an ADF&G representative in Barrow, Fairbanks, Galena, Nome, or Kotzebue; at the time of sealing, the ADF&G representative shall remove and retain the skin of the skull and front claws of the bear.

(iv) If the skin or skull of a bear taken in Unit 5 is removed from the area, it must first be sealed by an ADF&G representative in Yakutat; at the time of sealing, the ADF&G representative shall remove and retain the skin of the skull and front claws of the bear.

(4) No person may falsify any information required on the sealing certificate or temporary sealing form provided by the ADF&G in accordance with State regulations.

(f) Sealing of beaver, lynx, marten, otter, wolf, and wolverine. No person may possess or transport from Alaska the untanned skin of a marten taken in Units 1–5, 7, 13(E), and 14–16 or the untanned skin of a beaver, lynx, otter, wolf, or wolverine, whether taken inside or outside the state, unless the skin has been sealed by an authorized representative of ADF&G in accordance with State regulations.

(1) Any wolf taken in Unit 2 must be sealed on or before the 30th day after the date of taking.

(2) The radius and ulna of the left foreleg must remain naturally attached to the hide of any wolf taken in Units 1–5 until the hide is sealed.

(g) A person who takes a species listed in paragraph (f) of this section but who is unable to present the skin in person, must complete and sign a temporary sealing form and ensure that the completed temporary sealing form and skin are presented to an authorized representative of ADF&G for sealing consistent with requirements listed in paragraph (f) of this section.

(h) Utilization of wildlife. (1) No person may use wildlife as food for a dog or furbearer, or as bait, except for the following:

(i) The hide, skin, viscera, head, or bones of wildlife;

(ii) The skinned carcass of a furbearer;

(iii) Squirrels, hares (rabbits), grouse and ptarmigan; however, the breast meat of grouse and ptarmigan may not be used as animal food or bait;

(iv) Unclassified wildlife.

(2) A person taking wildlife for subsistence shall salvage the following parts for human use:

(i) The hide of a wolf, wolverine, coyote, fox, lynx, marten, mink, weasel or otter;

(ii) The hide and edible meat of a brown bear, except that the hide of brown bears taken in the Western and Northwestern Alaska Brown Bear Management Areas and Units 5 and 9(B) need not be salvaged;

(iii) The hide and edible meat of a black bear;

(iv) The hide or meat of squirrels, hares (rabbits), marmots, beaver, muskrats, or unclassified wildlife.

(3) Failure to salvage edible meat of ungulates, bear, or grouse and ptarmigan is prohibited.

(4) Failure to salvage the edible meat may not be a violation if such failure is caused by circumstances beyond the control of a person, including theft of the harvested wildlife, unanticipated weather conditions, or unavoidable loss to another animal.

(i) The regulations found in this section do not apply to the subsistence taking and use of wildlife regulated pursuant to the Fur Seal Act of 1966 (80 Stat. 927, 16 U.S.C. 1187), the Endangered Species Act of 1973 (87 Stat. 884, 16 U.S.C. 1531–1543), the Marine Mammal Protection Act of 1972 (86 Stat. 1027; 16 U.S.C. 1361–1407), and the Migratory Bird Treaty Act (40 Stat. 755; 16 U.S.C. 703–711), or any amendments to these Acts. The taking and use of wildlife, covered by these Acts, will conform to the specific provisions contained in these Acts, as amended, and any implementing regulations.

(j) Rural residents, non-rural residents, and nonresidents not specifically prohibited by Federal regulations from hunting or trapping on public lands in an area, may hunt or trap on public lands in accordance with the appropriate State regulations.

(k) Unit regulations. Subsistence taking of unclassified wildlife, all squirrel species, and marmots is allowed in all Units, without harvest limits, for the period of July 1–June 30. Subsistence taking of wildlife outside established Unit seasons, or in excess of the established Unit harvest limits, is prohibited unless otherwise modified by subsequent regulation. Taking of wildlife under State regulations on public lands is permitted, except as otherwise restricted at paragraphs (k)(1) through (26) of this section. Additional Unit-specific restrictions or allowances for subsistence taking of wildlife are identified at paragraphs (k)(1) through (26) of this section.

(1) *Unit 1.* Unit 1 consists of all mainland drainages from Dixon Entrance to Cape Fairweather, and those islands east of the center line of Clarence Strait from Dixon Entrance to Caamano Point, and all islands in Stephens Passage and Lynn Canal north of Taku Inlet:

(i) Unit 1(A) consists of all drainages south of the latitude of Lemesurier Point including all drainages into Behm Canal, excluding all drainages of Ernest Sound;

(ii) Unit 1(B) consists of all drainages between the latitude of Lemesurier Point and the latitude of Cape Fanshaw including all drainages of Ernest Sound and Farragut Bay, and including the islands east of the center lines of Frederick Sound, Dry Strait (between Sergief and Kadin Islands), Eastern Passage, Blake Channel (excluding Blake Island), Ernest Sound and Seward Passage;

(iii) Unit 1(C) consists of that portion of Unit 1 draining into Stephens Passage and Lynn Canal north of Cape Fanshaw and south of the latitude of Eldred Rock including Berners Bay, Sullivan Island, and all mainland portions north of Chichagof Island and south of the latitude of Eldred Rock, excluding drainages into Farragut Bay;

(iv) Unit 1(D) consists of that portion of Unit 1 north of the latitude of Eldred Rock, excluding Sullivan Island and the drainages of Berners Bay;

(v) In the following areas, the taking of wildlife for subsistence uses is prohibited or restricted on public lands:

(A) Public lands within Glacier Bay National Park are closed to all taking of wildlife for subsistence uses;

(B) Unit 1(A)—in the Hyder area, the Salmon River drainage downstream from the Riverside Mine, excluding the Thumb Creek drainage, is closed to the taking of bear;

(C) Unit 1(B)—the Anan Creek drainage within one mile of Anan Creek downstream from the mouth of Anan Lake, including the area within a one mile radius from the mouth of Anan Creek Lagoon, is closed to the taking of black bear and brown bear;

(D) Unit 1(C):

(*1*) The area within one-fourth mile of Mendenhall Lake, the U.S. Forest Service Mendenhall Glacier Visitor's Center, and the Center's parking area, is closed to hunting;

(*2*) The area of Mt. Bullard bounded by the Mendenhall Glacier, Nugget Creek from its mouth to its confluence with Goat Creek, and a line from the mouth of Goat Creek north to the Mendenhall Glacier, is closed to the taking of mountain goat;

(vi) In Unit 1(C), Juneau area, the trapping of furbearers for subsistence uses is prohibited on the following public lands:

(A) A strip within one-quarter mile of the mainland coast between the end of Thane Road and the end of Glacier Highway at Echo Cove;

(B) That area of the Mendenhall Valley bounded on the south by the Glacier Highway, on the west by the Mendenhall Loop Road and Montana Creek Road and Spur Road to Mendenhall Lake, on the north by Mendenhall Lake, and on the east by the Mendenhall Loop Road and Forest Service Glacier Spur Road to the Forest Service Visitor Center;

(C) That area within the U.S. Forest Service Mendenhall Glacier Recreation Area;

(D) A strip within one-quarter mile of the following trails as designated on U.S. Geological Survey maps: Herbert Glacier Trail, Windfall Lake Trail, Peterson Lake Trail, Spaulding Meadows Trail (including the loop trail), Nugget Creek Trail, Outer Point Trail, Dan Moller Trail, Perseverance Trail, Granite Creek Trail, Mt. Roberts Trail and Nelson Water Supply Trail, Sheep Creek Trail, and Point Bishop Trail;

(vii) Unit-specific regulations:

(A) Bait may be used to hunt black bear in Units 1(A), 1(B), and 1(D) between April 15 and June 15;

(B) Boats may not be used to take ungulates, bear, wolves, or wolverine, except for persons certified as disabled;

(C) The taking of wildlife outside the seasons or harvest limits provided in this part for food in traditional religious ceremonies which are part of a funerary or mortuary cycle, including memorial potlatches, is authorized in Units 1—5 provided that:

(*1*) The person organizing the religious ceremony, or designee, contact the appropriate Federal land management agency prior to taking or attempting to take game and provides to the appropriate Federal land managing agency the name of the decedent, the nature of the ceremony, the species and number to be taken, the Unit(s) in which the taking will occur;

(*2*) The taking does not violate recognized principles of fish and wildlife conservation;

(*3*) Each person who takes wildlife under this section must, as soon as practicable, and not more than 15 days after the harvest, submit a written report to the appropriate Federal land managing agency, specifying the harvester's name and address, the number, sex and species of wildlife taken, the date and locations of the taking, and the name of the decedent for whom the ceremony was held;

(*4*) No permit or harvest ticket is required for taking under this section; however, the harvester must be an Alaska rural resident with customary and traditional use in that area where the harvesting will occur;

(D) A Federally-qualified subsistence user (recipient) may designate another Federally-qualified subsistence user to take deer on his or her behalf unless the recipient is a member of a community operating under a community harvest system. The designated hunter must obtain a designated hunter permit and must return a completed harvest report. The designated hunter may hunt for any number of recipients but may have no more than two harvest limits in his/her possession at any one time.

Harvest limits	Open season
Hunting	
Black Bear: 2 bears, no more than one may be a blue or glacier bear	Sept. 1–June 30.
Brown Bear: 1 bear every four regulatory years by State registration permit only	Sept. 15–Dec. 31. Mar. 15–May 31.
Deer:	
Unit 1(A)—4 antlered deer	Aug. 1–Dec. 31.
Unit 1(B)—2 antlered deer	Aug. 1–Dec. 31.
Unit 1(C)—4 deer; however, antlerless deer may be taken only from Sept. 15–Dec. 31	Aug. 1–Dec. 31.
Goat:	
Unit 1(A)—Revillagigedo Island only	No open season.
Unit 1(B)—that portion north of LeConte Bay. 1 goat by State registration permit only; the taking of kids or nannies accompanied by kids is prohibited.	Aug. 1–Dec. 31.
Unit 1(B)—that portion between LeConte Bay and the North Fork of Bradfield River/Canal. 2 goats; a State registration permit will be required for the taking of the first goat and a Federal registration permit for the taking of a second goat; the taking of kids or nannies accompanied by kids is prohibited.	Aug. 1–Dec. 31.
Unit 1(A) and Unit 1(B)—Remainder—2 goats by State registration permit only	Aug. 1–Dec. 31.
Unit 1(C)—that portion draining into Lynn Canal and Stephens Passage between Antler River and Eagle Glacier and River, and all drainages of the Chilkat Range south of the Endicott River—1 goat by State registration permit only.	Oct. 1–Nov. 30.
Unit 1(C)—that portion draining into Stephens Passage and Taku Inlet between Eagle Glacier and River and Taku Glacier.	No open season.
Remainder of Unit 1(C)—1 goat by State registration permit only	Aug. 1–Nov. 30.
Unit 1(D)—that portion lying north of the Katzehin River and northeast of the Haines highway—1 goat by State registration permit only.	Sept. 15–Nov. 30.
Unit 1(D)—that portion lying between Taiya Inlet and River and the White Pass and Yukon Railroad	No open season.
Remainder of Unit 1(D)—1 goat by State registration permit only	Aug. 1–Dec. 31.
Moose:	
Unit 1(A)—1 antlered bull	Sept. 15–Oct. 15.
Unit 1(B) 1 antlered bull with spike-fork or 50-inch antlers or 3 or more brow tines on either antler, by State registration permit only.	Sept. 15–Oct. 15.
Unit 1(C), that portion south of Point Hobart including all Port Houghton drainages—1 antlered bull with spike-fork or 50-inch antlers or 3 or more brow tines on either antler, by State registration permit only.	Sept. 15–Oct. 15.
Remainder of Unit 1(C)—excluding drainages of Berners Bay—1 antlered bull by State registration permit only	Sept. 15–Oct. 15.
Unit 1(D)	No open season.

Harvest limits	Open season
Coyote: 2 coyotes	Sept. 1–Apr. 30.
Fox, Red (including Cross, Black, and Silver Phases):2 foxes	Nov. 1–Feb. 15.
Hare (Snowshoe and Tundra):5 hares per day	Sept. 1–Apr. 30.
Lynx: 2 lynx	Dec. 1–Feb. 15.
Wolf: 5 wolves	Aug. 1–Apr. 30.
Wolverine: 1 wolverine	Nov. 10–Feb. 15.
Grouse (Spruce, Blue, Ruffed, and Sharp-tailed): 5 per day, 10 in possession	Aug. 1–May 15.
Ptarmigan (Rock, Willow, and White-tailed): 20 per day, 40 in possession	Aug. 1–May 15.
Trapping	
Beaver: Unit 1(A), (B), and (C)—No limit	Dec. 1–May 15.
Coyote: No limit	Dec. 1–Feb. 15.
Fox, Red (including Cross, Black, and Silver Phases): No limit	Dec. 1–Feb. 15.
Lynx: No limit	Dec. 1–Feb. 15.
Marten: No limit	Dec. 1–Feb. 15.
Mink and Weasel: No limit	Dec. 1–Feb. 15.
Muskrat: No limit	Dec. 1–Feb. 15.
Otter: No limit	Dec. 1–Feb. 15.
Wolf: No limit	Nov. 10–Apr. 30.
Wolverine: No limit	Nov. 10–Apr. 30.

(2) *Unit 2.* Unit 2 consists of Prince of Wales Island and all islands west of the center lines of Clarence Strait and Kashevarof Passage, south and east of the center lines of Sumner Strait, and east of the longitude of the western most point on Warren Island.

(i) Unit-specific regulations:

(A) Bait may be used to hunt black bear between April 15 and June 15;

(B) Boats may not be used to take ungulates, bear, wolves, or wolverine, except for persons certified as disabled;

(C) The taking of wildlife outside the seasons or harvest limits provided in this part for food in traditional religious ceremonies which are part of a funerary or mortuary cycle, including memorial potlatches, is authorized in Units 1–5 provided that:

(*1*) The person organizing the religious ceremony, or designee, contact the appropriate Federal land management agency prior to taking or attempting to take game and provides to the appropriate Federal land managing agency the name of the decedent, the nature of the ceremony, the species and number to be taken, the Unit(s) in which the taking will occur;

(*2*) The taking does not violate recognized principles of fish and wildlife conservation;

(*3*) Each person who takes wildlife under this section must, as soon as practicable, and not more than 15 days after the harvest, submit a written report to the appropriate Federal land managing agency, specifying the harvester's name and address, the number, sex and species of wildlife taken, the date and locations of the taking, and the name of the decedent for whom the ceremony was held;

(*4*) No permit or harvest ticket is required for taking under this section; however, the harvester must be an Alaska rural resident with customary and traditional use in that area where the harvesting will occur;

(D) A Federally-qualified subsistence user (recipient) may designate another Federally-qualified subsistence user to take deer on his or her behalf unless the recipient is a member of a community operating under a community harvest system. The designated hunter must obtain a designated hunter permit and must return a completed harvest report. The designated hunter may hunt for any number of recipients but may have no more than two harvest limits in his/her possession at any one time.

(ii) [Reserved]

Harvest limits	Open season
Hunting	
Black Bear: 2 bears, no more than one may be a blue or glacier bear	Sept. 1–June 30.
Deer: 4 deer; however, no more than one may be an antlerless deer. Antlerless deer may be taken only during the period Oct. 15–Dec. 31 by Federal registration permit only.	Aug. 1–Dec. 31.
Coyote: 2 coyotes	Sept. 1–Apr. 30.
Fox, Red (including Cross, Black, and Silver Phases): 2 foxes.	Nov. 1–Feb. 15.
Hare (Snowshoe and Tundra): 5 hares per day	Sept. 1–Apr. 30.
Lynx: 2 lynx	Dec. 1–Feb. 15.
Wolf: 5 wolves	Dec. 1–Mar. 31.
Wolverine: 1 wolverine	Nov. 10–Feb. 15.
Grouse (Spruce, Blue, Ruffed, and Sharp-tailed): 5 per day, 10 in possession	Aug. 1–May 15.
Ptarmigan (Rock, Willow, and White-tailed): 20 per day, 40 in possession	Aug. 1–May 15.
Trapping	
Beaver: No limit	Dec. 1–May 15.
Coyote: No limit	Dec. 1–Feb. 15.
Fox, Red (including Cross, Black, and Silver Phases): No limit	Dec. 1–Feb. 15.
Lynx: No limit	Dec. 1–Feb. 15.
Marten: No limit	Dec. 1–Feb. 15.
Mink and Weasel: No limit	Dec. 1–Feb. 15.
Muskrat: No limit	Dec. 1–Feb. 15.

Harvest limits	Open season
Otter: No limit	Dec. 1–Feb. 15.
Wolf: No limit	Dec. 1–Mar. 31.
Wolverine: No limit	Nov. 10–Apr. 30.

(3) *Unit 3.* (i) Unit 3 consists of all islands west of Unit 1(B), north of Unit 2, south of the center line of Frederick Sound, and east of the center line of Chatham Strait including Coronation, Kuiu, Kupreanof, Mitkof, Zarembo, Kashevarof, Woronkofski, Etolin, Wrangell, and Deer Islands.

(ii) In the following areas, the taking of wildlife for subsistence uses is prohibited or restricted on public lands:

(A) In the Petersburg vicinity, a strip one-fourth mile wide on each side of the Mitkof Highway from Milepost 0 to Crystal Lake campground is closed to the taking of ungulates, bear, wolves and wolverine;

(B) The Petersburg Creek drainage on Kupreanof Island is closed to the taking of black bears;

(C) Blind Slough draining into Wrangell Narrows and a strip one-fourth mile wide on each side of Blind Slough, from the hunting closure markers at the southernmost portion of Blind Island to the hunting closure markers one mile south of the Blind Slough bridge, are closed to all hunting.

(iii) Unit-specific regulations:

(A) Bait may be used to hunt black bear between April 15 and June 15;

(B) Boats may not be used to take ungulates, bear, wolves, or wolverine, except for persons certified as disabled;

(C) The taking of wildlife outside the seasons or harvest limits provided in this part for food in traditional religious ceremonies which are part of a funerary or mortuary cycle, including memorial potlatches, is authorized in Units 1–5 provided that:

(*1*) The person organizing the religious ceremony, or designee, contact the appropriate Federal land management agency prior to taking or attempting to take game and provides to the appropriate Federal land managing agency the name of the decedent, the nature of the ceremony, the species and number to be taken, the Unit(s) in which the taking will occur;

(*2*) The taking does not violate recognized principles of fish and wildlife conservation;

(*3*) Each person who takes wildlife under this section must, as soon as practicable, and not more than 15 days after the harvest, submit a written report to the appropriate Federal land managing agency, specifying the harvester's name and address, the number, sex and species of wildlife taken, the date and locations of the taking, and the name of the decedent for whom the ceremony was held;

(*4*) No permit or harvest ticket is required for taking under this section; however, the harvester must be an Alaska rural resident with customary and traditional use in that area where the harvesting will occur;

(D) A Federally-qualified subsistence user (recipient) may designate another Federally-qualified subsistence user to take deer on his or her behalf unless the recipient is a member of a community operating under a community harvest system. The designated hunter must obtain a designated hunter permit and must return a completed harvest report. The designated hunter may hunt for any number of recipients but may have no more than two harvest limits in his/her possession at any one time.

Harvest limits	Open season
Hunting	
Black Bear: 2 bears, no more than one may be a blue or glacier bear	Sept. 1–June 30.
Deer:	
Unit 3—Mitkof Island, Woewodski Island, Butterworth Islands, and that portion of Kupreanof Island which includes Lindenburg Peninsula east of the Portage Bay/Duncan Canal Portage—1 antlered deer by State registration permit only; however, the city limits of Petersburg and Kupreanof are closed to hunting.	Oct. 15–Oct. 31.
Remainder of Unit 3—2 antlered deer	Aug. 1–Nov. 30.
Moose: Unit 3—1 antlered bull with spike-fork or 50-inch antlers or 3 or more brow tines on either antler by State registration permit only.	Sept. 15–Oct. 15.
Coyote: 2 coyotes	Sept. 1–Apr. 30.
Fox, Red (including Cross, Black, and Silver Phases): 2 foxes	Nov. 1–Feb. 15.
Hare (Snowshoe and Tundra): 5 hares per day	Sept. 1–Apr. 30.
Lynx: 2 lynx	Dec. 1–Feb. 15.
Wolf: 5 wolves	Aug. 1–Apr. 30.
Wolverine: 1 wolverine	Nov. 10–Feb. 15.
Grouse (Spruce, Blue, Ruffed, and Sharp-tailed): 5 per day, 10 in possession	Aug. 1–May 15.
Ptarmigan (Rock, Willow, and White-tailed): 20 per day, 40 in possession	Aug. 1–May 15.
Trapping	
Beaver:	
Unit 3—Mitkof Island No limit	Dec. 1–Apr. 15.
Unit 3—except Mitkof Island No limit	Dec. 1–May 15.
Coyote: No limit	Dec. 1–Feb. 15.
Fox, Red (including Cross, Black, and Silver Phases): No limit	Dec. 1–Feb. 15.
Lynx: No limit	Dec. 1–Feb. 15.
Marten: No limit	Dec. 1–Feb. 15.
Mink and Weasel: No limit	Dec. 1–Feb. 15.
Muskrat: No limit	Dec. 1–Feb. 15.
Otter: No limit	Dec. 1–Feb. 15.
Wolf: No limit	Nov. 10–Apr. 30.
Wolverine: No limit	Nov. 10.–Apr. 30.

(4) *Unit 4.* (i) Unit 4 consists of all islands south and west of Unit 1(C) and north of Unit 3 including Admiralty, Baranof, Chichagof, Yakobi, Inian, Lemesurier, and Pleasant Islands.

(ii) In the following areas, the taking of wildlife for subsistence uses is prohibited or restricted on public lands:

(A) The Seymour Canal Closed Area (Admiralty Island) including all drainages into northwestern Seymour Canal between Staunch Point and the southernmost tip of the unnamed peninsula separating Swan Cove and King Salmon Bay including Swan and Windfall Islands, is closed to the taking of bears;

(B) The Salt Lake Closed Area (Admiralty Island) including all lands within one-fourth mile of Salt Lake above Klutchman Rock at the head of Mitchell Bay, is closed to the taking of bears;

(C) Port Althorp Closed Area (Chichagof Island), that area within the Port Althorp watershed south of a line from Point Lucan to Salt Chuck Point (Trap Rock), is closed to the taking of brown bears;

(D) Northeast Chichagof Controlled Use Area (NECCUA) consisting of all portions of Unit 4 on Chichagof Island north of Tenakee Inlet and east of the drainage divide from the northwest point of Gull Cove to Port Frederick Portage, including all drainages into Port Frederick and Mud Bay, is closed to the use of any motorized land vehicle for brown bear hunting, or for the taking of marten, mink, or weasel.

(iii) Unit-specific regulations:

(A) Boats may not be used to take bear, wolves, or wolverine, except for persons certified as disabled;

(B) A Federally-qualified subsistence user (recipient) may designate another Federally-qualified subsistence user to take deer on his or her behalf unless the recipient is a member of a community operating under a community harvest system. The designated hunter must obtain a designated hunter permit and must return a completed harvest report. The designated hunter may hunt for any number of recipients but may have no more than two harvest limits in his/her possession at any one time;

(C) The taking of wildlife outside the seasons or harvest limits provided in this part for food in traditional religious ceremonies which are part of a funerary or mortuary cycle, including memorial potlatches, is authorized in Units 1–5 provided that:

(*1*) The person organizing the religious ceremony, or designee, contact the appropriate Federal land management agency prior to taking or attempting to take game and provides to the appropriate Federal land managing agency the name of the decedent, the nature of the ceremony, the species and number to be taken, the Unit(s) in which the taking will occur;

(*2*) The taking does not violate recognized principles of fish and wildlife conservation;

(*3*) Each person who takes wildlife under this section must, as soon as practicable, and not more than 15 days after the harvest, submit a written report to the appropriate Federal land managing agency, specifying the harvester's name and address, the number, sex and species of wildlife taken, the date and locations of the taking, and the name of the decedent for whom the ceremony was held;

(*4*) No permit or harvest ticket is required for taking under this section; however, the harvester must be an Alaska rural resident with customary and traditional use in that area where the harvesting will occur;

(D) Chichagof Island is closed to the use of any motorized land vehicle for the taking of marten, mink, and weasel.

Harvest limits	Open season
Hunting	
Brown Bear:	
Unit 4—Chichagof Island south and west of a line that follows the crest of the island from Rock Point (58° N. lat., 136° 21′ W. long.), to Rodgers Point (57° 35′ N. lat., 135° 33′ W. long.) including Yakobi and other adjacent islands; Baranof Island south and west of a line which follows the crest of the island from Nismeni Point (57° 34′ N. lat., 135° 25′ W. long.), to the entrance of Gut Bay (56° 44′ N. lat. 134° 38′ W. long.) including the drainages into Gut Bay and including Kruzof and other adjacent islands—1 bear every four regulatory years by State registration permit only	Sept. 15–Dec. 31. Mar. 15–May 31.
Unit 4—that portion in the Northeast Chichagof Controlled Use Area—1 bear every four regulatory years by State registration permit only	Mar. 15–May 20. Sept. 15–Dec. 31.
Remainder of Unit 4—1 bear every four regulatory years by State registration permit only	Mar. 15–May 20.
Deer: 6 deer; however, antlerless deer may be taken only from Sept. 15–Jan. 31	Aug. 1–Jan. 31.
Goat: 1 goat by State registration permit only	Aug. 1–Dec. 31.
Coyote: 2 coyotes	Sept. 1–Apr. 30.
Fox, Red (including Cross, Black, and Silver Phases): 2 foxes.	Nov. 1–Feb. 15.
Hare (Snowshoe and Tundra): 5 hares per day	Sept. 1–Apr. 30.
Lynx: 2 lynx	Dec. 1–Feb. 15.
Wolf: 5 wolves	Aug. 1–Apr. 30.
Wolverine: 1 wolverine	Nov. 10–Feb. 15.
Grouse (Spruce, Blue, Ruffed, and Sharp-tailed): 5 per day, 10 in possession	Aug. 1–May 15.
Ptarmigan (Rock, Willow, and White-tailed): 20 per day, 40 in possession	Aug. 1.–May 15.
Trapping	
Beaver:	
Unit 4—that portion east of Chatham Strait—No limit	Dec. 1–May 15.
Remainder of Unit 4	No open season.
Coyote: No limit	Dec. 1–Feb. 15.
Fox, Red (including Cross, Black, and Silver Phases): No limit	Dec. 1–Feb. 15.
Lynx: No limit	Dec. 1–Feb. 15.
Marten:	
Unit 4—Chichagof Island—No limit	Dec. 1–Dec. 31.
Remainder of Unit 4—No limit	Dec. 1–Feb. 15.
Mink and Weasel:	
Unit 4—Chichagof Island—No limit	Dec. 1–Dec. 31.
Remainder of Unit 4—No limit	Dec. 1–Feb. 15.

Harvest limits	Open season
Muskrat: No limit	Dec. 1–Feb. 15.
Otter: No limit	Dec. 1–Feb. 15.
Wolf: No limit	Nov. 10–Apr. 30.
Wolverine: No limit	Nov. 10–Apr. 30.

(5) *Unit 5*. (i) Unit 5 consists of all Gulf of Alaska drainages and islands between Cape Fairweather and the center line of Icy Bay, including the Guyot Hills:

(A) Unit 5(A) consists of all drainages east of Yakutat Bay, Disenchantment Bay, and the eastern edge of Hubbard Glacier, and includes the islands of Yakutat and Disenchantment Bays;

(B) Unit 5(B) consists of the remainder of Unit 5.

(ii) Public lands within Glacier Bay National Park are closed to all taking of wildlife for subsistence uses.

(iii) Unit-specific regulations:

(A) Bait may be used to hunt black bear between April 15 and June 15;

(B) Boats may not be used to take ungulates, bear, wolves, or wolverine, except for persons certified as disabled;

(C) Unit 5 is open to brown bear hunting by Federal registration permit in lieu of a State metal locking tag; no State metal locking tag is required for taking a brown bear in Unit 5, provided that the hunter has obtained a Federal registration permit prior to hunting;

(D) The taking of wildlife outside the seasons or harvest limits provided in this part for food in traditional religious ceremonies which are part of a funerary or mortuary cycle, including memorial potlatches, is authorized in Units 1–5 provided that:

(*1*) The person organizing the religious ceremony, or designee, contact the appropriate Federal land management agency prior to taking or attempting to take game and provides to the appropriate Federal land managing agency the name of the decedent, the nature of the ceremony, the species and number to be taken, the Unit(s) in which the taking will occur;

(*2*) The taking does not violate recognized principles of fish and wildlife conservation;

(*3*) Each person who takes wildlife under this section must, as soon as practicable, and not more than 15 days after the harvest, submit a written report to the appropriate Federal land managing agency, specifying the harvester's name and address, the number, sex and species of wildlife taken, the date and locations of the taking, and the name of the decedent for whom the ceremony was held;

(*4*) No permit or harvest ticket is required for taking under this section; however, the harvester must be an Alaska rural resident with customary and traditional use in that area where the harvesting will occur;

(E) A Federally-qualified subsistence user (recipient) may designate another Federally-qualified subsistence user to take deer or moose on his or her behalf unless the recipient is a member of a community operating under a community harvest system. The designated hunter must obtain a designated hunter permit and must return a completed harvest report. The designated hunter may hunt for any number of recipients but may have no more than two harvest limits in his/her possession at any one time.

Harvest limits	Open season
Hunting	
Black Bear: 2 bears, no more than one may be a blue or glacier bear	Sept. 1–June 30.
Brown Bear: 1 bear by Federal registration permit only	Sept. 1–May 31.
Deer:	
Unit 5(A)—1 buck	Nov. 1–Nov. 30.
Unit 5(B).	No open season.
Goat: 1 goat by Federal registration permit only	Aug. 1–Jan. 31.
Moose:	
Unit 5(A), Nunatak Bench—1 moose by State registration permit only. The season will be closed when 5 moose have been taken from the Nunatak Bench.	Nov. 15–Feb. 15.
Unit 5(A), except Nunatak Bench—1 antlered bull by Federal registration permit only. The season will be closed when 60 antlered bulls have been taken from the Unit. The season will be closed in that portion west of the Dangerous River when 30 antlered bulls have been taken in that area. From Oct. 15–Oct. 21, public lands will be closed to taking of moose, except by rural Alaska residents of Unit 5(A).	Oct. 8–Nov. 15.
Unit 5(B)—1 antlered bull by State registration permit only. The season will be closed when 25 antlered bulls have been taken from the entirety of Unit 5(B).	Sept. 1–Dec. 15.
Coyote: 2 coyotes	Sept. 1–Apr. 30.
Fox, Red (including Cross, Black and Silver Phases): 2 foxes	Nov. 1–Feb. 15.
Hare (Snowshoe and Tundra): 5 hares per day	Sept. 1–Apr. 30.
Lynx: 2 lynx	Dec. 1–Feb. 15.
Wolf: 5 wolves	Aug. 1–Apr. 30.
Wolverine: 1 wolverine	Nov. 10–Feb. 15.
Grouse (Spruce, Blue, Ruffed, and Sharp-tailed): 5 per day, 10 in possession	Aug. 1–May 15.
Ptarmigan (Rock, Willow, and White-tailed): 20 per day, 40 in possession	Aug. 1–May 15.
Trapping	
Beaver: No limit	Nov. 10–May 15.
Coyote: No limit	Dec. 1–Feb. 15.
Fox, Red (including Cross, Black and Silver Phases): No limit	Dec. 1–Feb. 15.
Lynx: No limit	Dec. 1–Feb. 15.
Marten: No limit	Nov. 10–Feb. 15.
Mink and Weasel: No limit	Nov. 10–Feb. 15.
Muskrat: No limit	Dec. 1–Feb. 15.

Harvest limits	Open season
Otter: No limit	Nov. 10–Feb. 15.
Wolf: No limit	Nov. 10–Apr. 30.
Wolverine: No limit	Nov. 10–Apr. 30.

(6) *Unit 6.* (i) Unit 6 consists of all Gulf of Alaska and Prince William Sound drainages from the center line of Icy Bay (excluding the Guyot Hills) to Cape Fairfield including Kayak, Hinchinbrook, Montague, and adjacent islands, and Middleton Island, but excluding the Copper River drainage upstream from Miles Glacier, and excluding the Nellie Juan and Kings River drainages:

(A) Unit 6(A) consists of Gulf of Alaska drainages east of Palm Point near Katalla including Kanak, Wingham, and Kayak Islands;

(B) Unit 6(B) consists of Gulf of Alaska and Copper River Basin drainages west of Palm Point near Katalla, east of the west bank of the Copper River, and east of a line from Flag Point to Cottonwood Point;

(C) Unit 6(C) consists of drainages west of the west bank of the Copper River, and west of a line from Flag Point to Cottonwood Point, and drainages east of the east bank of Rude River and drainages into the eastern shore of Nelson Bay and Orca Inlet;

(D) Unit 6(D) consists of the remainder of Unit 6.

(ii) For the following areas, the taking of wildlife for subsistence uses is prohibited or restricted on public lands:

(A) The Goat Mountain goat observation area, which consists of that portion of Unit 6(B) bounded on the north by Miles Lake and Miles Glacier, on the south and east by Pleasant Valley River and Pleasant Glacier, and on the west by the Copper River, is closed to the taking of mountain goat;

(B) The Heney Range goat observation area, which consists of that portion of Unit 6(C) south of the Copper River Highway and west of the Eyak River, is closed to the taking of mountain goat.

(iii) Unit-specific regulations:

(A) Bait may be used to hunt black bear between April 15 and June 15;

(B) Coyotes may be taken in Units 6(B) and 6(C) with the aid of artificial lights.

Harvest limits	Open season
Hunting	
Black Bear: 1 bear	Sept. 1–June 30.
Deer: 4 deer; however, antlerless deer may be taken only from Oct. 1–Dec. 31	Aug. 1–Dec. 31.
Goats:	
Unit 6(A), (B)—1 goat by State registration permit only	Aug. 20–Jan. 31.
Unit 6(C)	No open season.
Unit 6(D) (subareas RG242, RG244, RG249, RG266 and RG252 only)—1 goat by Federal registration permit only	Aug. 20–Jan. 31.
In each of the Unit 6(D) subareas, goat seasons will be closed when harvest limits for that subarea are reached. Harvest quotas are as follows: RG242—2 goats, RG244—2 goats, RG249—2 goats, RG266—4 goats, RG252—1 goat.	
Unit 6(D) (subareas RG243 and RG245)—The taking of goats is prohibited on all public lands	No open season.
Coyote:	
Unit 6(A) and (D)—2 coyotes	Sept. 1–Apr. 30.
Unit 6(B)—No limit	July 1–June 30.
Unit 6(C)—South of the Copper River Highway and east of the Heney Range—No limit	July 1–June 30.
Remainder of Unit 6(C)—No limit	July 1–June 30.
Fox, Red (including Cross, Black and Silver Phases)	No open season.
Hare (Snowshoe and Tundra): No limit	July 1–June 30.
Lynx	No open season.
Wolf: 5 wolves	Aug. 10–Apr. 30.
Wolverine: 1 wolverine	Sept. 1–Mar. 31.
Grouse (Spruce, Blue, Ruffed, and Sharp-tailed): 5 per day, 10 in possession	Aug. 1–May 15.
Ptarmigan (Rock, Willow, and White-tailed): 20 per day, 40 in possession	Aug. 1–May 15.
Trapping	
Beaver: 20 beaver per season	Dec. 1–Mar. 31.
Coyote:	
Unit 6(A), (B) and (D)—No limit	Nov. 10–Mar. 31.
Unit 6(C)—South of the Copper River Highway and east of the Heney Range—No limit	Nov. 10–Apr. 30.
Remainder of Unit 6(C)—No limit	Nov. 10–Mar. 31.
Fox, Red (including Cross, Black and Silver Phases): No limit	Nov. 10–Feb. 28.
Lynx: No limit	Jan. 1–Feb. 15.
Marten: No limit	Nov. 10–Jan. 31.
Mink and Weasel: No limit	Nov. 10–Jan. 31.
Muskrat: No limit	Nov. 10–June 10.
Otter: No limit	Nov. 10–Mar. 31
Wolf: No limit	Nov. 10–Mar. 31.
Wolverine: No limit	Nov. 10–Feb. 28.

(7) *Unit 7.* (i) Unit 7 consists of Gulf of Alaska drainages between Gore Point and Cape Fairfield including the Nellie Juan and Kings River drainages, and including the Kenai River drainage upstream from the Russian River, the

drainages into the south side of Turnagain Arm west of and including the Portage Creek drainage, and east of 150° W. long., and all Kenai Peninsula drainages east of 150° W. long., from Turnagain Arm to the Kenai River.

(ii) In the following areas, the taking of wildlife for subsistence uses is prohibited or restricted on public lands:

(A) Kenai Fjords National Park is closed to all subsistence uses;

(B) The Portage Glacier Closed Area in Unit 7, which consists of Portage Creek drainages between the Anchorage-Seward Railroad and Placer Creek in Bear Valley, Portage Lake, the mouth of Byron Creek, Glacier Creek and Byron Glacier, is closed to hunting; however, grouse, ptarmigan, hares, and squirrels may be hunted with shotguns after September 1.

(iii) Unit-specific regulations:

(A) Bait may be used to hunt black bear between April 15 and June 15; except Resurrection Creek and its tributaries.

(B) [Reserved]

Harvest limits	Open season
Hunting	
Black Bear: Unit 7—3 bears	July 1–June 30.
Moose:	
Unit 7, that portion draining into Kings Bay—1 bull with spike-fork or 50-inch antlers or 3 or more brow tines on either antler may be taken by the community of Chenega Bay and also by the community of Tatitlek. Public lands are closed to the taking of moose except by eligible rural residents.	August 10–Sept. 20.
Unit 7, Remainder	No open season.
Coyote: No limit	Sept. 1–Apr. 30.
Fox, Red (including Cross, Black and Silver Phases): 2 foxes	Nov. 1–Feb. 15.
Hare (Snowshoe and Tundra): No limit	July 1–June 30.
Wolf:	
Unit 7—that portion within the Kenai National Wildlife Refuge—2 wolves	Aug. 10–Apr. 30.
Unit 7—Remainder—5 wolves	Aug. 10–Apr. 30.
Wolverine: 1 wolverine	Sept. 1–Mar. 31.
Grouse (Spruce, Blue, Ruffed, and Sharp-tailed): 15 per day, 30 in possession	Aug. 10–Mar. 31.
Ptarmigan (Rock, Willow, and White-tailed): 20 per day, 40 in possession	Aug. 10–Mar. 31.
Trapping	
Beaver: 20 Beaver per season	Dec. 1–Mar. 31.
Coyote: No limit	Nov. 10–Feb. 28.
Fox, Red (including Cross, Black and Silver Phases): No limit	Nov. 10–Feb. 28.
Lynx: No limit	Jan. 1–Feb. 15.
Marten: No limit	Nov. 10–Jan. 31.
Mink and Weasel: No limit	Nov. 10–Jan. 31.
Muskrat: No limit	Nov. 10–May 15.
Otter: No limit	Nov. 10–Feb. 28.
Wolf: No limit	Nov. 10–Feb. 28.
Wolverine: No limit	Nov. 10–Feb. 28.

(8) *Unit 8.* Unit 8 consists of all islands southeast of the centerline of Shelikof Strait including Kodiak, Afognak, Whale, Raspberry, Shuyak, Spruce, Marmot, Sitkalidak, Amook, Uganik, and Chirikof Islands, the Trinity Islands, the Semidi Islands, and other adjacent islands.

(i) A firearm may be used to take beaver with a trapping license in Unit 8 from Nov. 10—Apr. 30.

(ii) A Federally-qualified subsistence user (recipient) may designate another Federally-qualified subsistence user to take deer on his or her behalf unless the recipient is a member of a community operating under a community harvest system. The designated hunter must obtain a designated hunter permit and must return a completed harvest report. The designated hunter may hunt for any number of recipients but may have no more than two harvest limits in his/her possession at any one time.

Harvest limits	Open season
Hunting	
Brown Bear: 1 bear by Federal registration permit only. Up to 1 permit may be issued in Akiok; up to 1 permit may be issued in Karluk; up to 3 permits may be issued in Larsen Bay; up to 2 permits may be issued in Old Harbor; up to 2 permits may be issued in Ouzinkie; and up to 2 permits may be issued in Port Lions.	Dec. 1–Dec. 15. Apr. 1–May 15.
Deer:	
Unit 8—that portion of Kodiak Island north of a line from the head of Settlers Cove to Crescent Lake (57°52′ N. lat., 152°58′ W. long.), and east of a line from the outlet of Crescent Lake to Mount Ellison Peak and from Mount Ellison Peak to Pokati Point at Whale Passage, and that portion of Kodiak Island east of a line from the mouth of Saltery Creek to the mouth at Elbow Creek, and adjacent small islands in Chiniak Bay—1 deer; however, antlerless deer may be taken only from Oct. 25–Oct. 31.	Aug. 1–Oct. 31.
Unit 8—that portion of Kodiak Island and adjacent islands south and west of a line from the head of Terror Bay to the head of the south-western most arm of Ugak Bay—5 deer; however, antlerless deer may be taken only from Oct 1–Jan. 31.	Aug. 1–Jan. 31.
Remainder of Unit 8—5 deer; however, antlerless deer may be taken only from Oct. 1–Jan. 31; no more than 1 antlerless deer may be taken from Oct 1–Nov. 30.	Aug. 1–Jan. 31.
Elk: Afognak Island above mean high tide—1 elk per household by Federal registration permit only; only 1 elk in possession for each two hunters in a party. Entry for elk hunting shall be from marine waters only.	Sept. 1–Sept. 25
Fox, Red (including Cross, Black and Silver Phases): 2 foxes	Sept. 1–Feb. 15.

Harvest limits	Open season
Hare (Snowshoe and Tundra): No limit	July 1–June 30.
Ptarmigan (Rock, Willow, and White-tailed): 20 per day, 40 in possession	Aug. 10–Apr. 30.
Trapping	
Beaver: 30 beaver per season	Nov. 10–Apr. 30.
Fox, Red (including Cross, Black and Silver Phases): No limit	Nov. 10–Mar. 31.
Marten: No limit	Nov. 10–Jan. 31.
Mink and Weasel: No limit	Nov. 10–Jan. 31.
Muskrat: No limit	Nov. 10–June 10.
Otter: No limit	Nov. 10–Jan. 31.

(9) *Unit 9.* (i) Unit 9 consists of the Alaska Peninsula and adjacent islands including drainages east of False Pass, Pacific Ocean drainages west of and excluding the Redoubt Creek drainage; drainages into the south side of Bristol Bay, drainages into the north side of Bristol Bay east of Etolin Point, and including the Sanak and Shumagin Islands:

(A) Unit 9(A) consists of that portion of Unit 9 draining into Shelikof Strait and Cook Inlet between the southern boundary of Unit 16 (Redoubt Creek) and the northern boundary of Katmai National Park and Preserve;

(B) Unit 9(B) consists of the Kvichak River drainage;

(C) Unit 9(C) consists of the Alagnak (Branch) River drainage, the Naknek River drainage, and all land and water within Katmai National Park and Preserve;

(D) Unit 9(D) consists of all Alaska Peninsula drainages west of a line from the southernmost head of Port Moller to the head of American Bay including the Shumagin Islands and other islands of Unit 9 west of the Shumagin Islands;

(E) Unit 9(E) consists of the remainder of Unit 9.

(ii) In the following areas, the taking of wildlife for subsistence uses is prohibited or restricted on public lands:

(A) Katmai National Park is closed to all subsistence uses;

(B) The use of motorized vehicles, excluding aircraft, boats, or snowmobiles used for hunting and transporting a hunter or harvested animal parts, is prohibited from Aug. 1—Nov. 30 in the Naknek Controlled Use Area, which includes all of Unit 9(C) within the Naknek River drainage upstream from and including the King Salmon Creek drainage; however, this restriction does not apply to a motorized vehicle on the Naknek-King Salmon, Lake Camp, and Rapids Camp roads and on the King Salmon Creek trail, and on frozen surfaces of the Naknek River and Big Creek;

(C) A firearm may be used under a trapping license to take beaver in Unit 9(B) from April 1—May 31 and in the remainder of Unit 9 from April 1—April 30;

(D) In Unit 9(B), Lake Clark National Park and Preserve, residents of Nondalton, Iliamna, Newhalen, Pedro Bay, and Port Alsworth, may hunt brown bear by Federal registration permit in lieu of a resident tag; ten permits will be available with at least one permit issued in each community but no more than five permits will be issued in a single community; the season will be closed when four females or ten bears have been taken, whichever occurs first;

(E) Residents of Newhalen, Nondalton, Iliamna, Pedro Bay, and Port Alsworth may take up to a total of 10 bull moose in Unit 9(B) for ceremonial purposes, under the terms of a Federal registration permit from July 1 through June 30. Permits will be issued to individuals only at the request of a local organization. This 10 moose limit is not cumulative with that permitted for potlatches by the State.

Harvest limits	Open season
Hunting	
Black Bear: 3 bears	July 1–June 30.
Brown Bear:	
Unit 9(B)—Lake Clark National Park and Preserve—Rural residents of Nondalton, Iliamna, Newhalen, Pedro Bay, and Port Alsworth only—1 bear by Federal registration permit only.	July 1–June 30.
Unit 9(B), remainder—1 bear by State registration permit only	Sept. 1–May 31.
Unit 9(E)—1 bear by Federal registration permit	Oct. 1–Dec. 31. May 10–May 25.
Caribou:	
Unit 9(A)—4 caribou; however, no more than 2 caribou may be taken Aug. 10–Sept. 30 and no more than 1 caribou may be taken Oct. 1–Nov. 30.	Aug. 10–Mar. 31.
Unit 9(C)—4 caribou; however, no more than 1 may be a cow, no more than 2 caribou may be taken Aug. 10–Nov. 30, and no more than 1 caribou may be taken per calendar month between Dec. 1–Mar. 31.	Aug. 10–Mar. 31.
Unit 9(B)—5 caribou; however, no more than 2 bulls may be taken from Oct. 1–Nov. 30	Aug. 1–Apr. 15.
Unit 9(D)—closed to all hunting of caribou	No open season.
Unit 9(E)—that portion southwest of the headwaters of Fireweed and Blueberry Creeks (north of Mt. Veniaminof) to and including the Sandy River drainage on the Bristol Bay side of the Alaska Peninsula; and that portion south of Seal Cape to Ramsey Bay on the Pacific side of the Alaska Peninsula divide is closed to all hunting of caribou.	No open season.
Remainder of Unit 9(E)—4 caribou	Aug. 10–Apr. 30
Sheep:	
Unit 9(B)—Residents of Iliamna, Newhalen, Nondalton, Pedro Bay, and Port Alsworth only—1 ram with 7/8 curl horn by Federal registration permit only.	Aug. 10–Oct. 10.
Remainder of Unit 9—1 ram with 7/8 curl horn	Aug. 10–Sept. 20
Moose:	
Unit 9(A)—1 bull	Sept. 1–Sept. 15.

Harvest limits	Open season
Unit 9(B)—1 bull	Aug. 20–Sept. 15. Dec. 1–Dec. 31.
Unit 9(C)—that portion draining into the Naknek River from the north—1 bull	Sept. 1–Sept. 15. Dec. 1–Dec. 31.
Unit 9(C)—that portion draining into the Naknek River from the south—1 bull. However, during the period Aug. 20–Aug. 31, bull moose may be taken by Federal registration permit only During the December hunt, antlerless moose may be taken by Federal registration permit only. The antlerless season will be closed when 5 antlerless moose have been taken. Public lands are closed during December for the hunting of moose, except by eligible rural Alaska residents.	Aug. 20–Sept. 15. Dec. 1–Dec. 31.
Remainder of Unit 9(C)—1 moose; however, antlerless moose may be taken only from Dec. 1–Dec. 31	Sept. 1–Sept. 15. Dec. 1–Dec. 31.
Unit 9(E)—1 bull	Sept. 1–Sept. 20. Dec. 1–Dec. 31
Coyote: 2 coyotes	Sept. 1–Apr. 30
Fox, Arctic (Blue and White): No limit	Dec. 1–Mar. 15
Fox, Red (including Cross, Black and Silver Phases): 2 foxes	Sept. 1–Feb. 15
Hare (Snowshoe and Tundra): No limit	July 1–June 30
Lynx: 2 lynx	Nov. 10–Feb. 28
Wolf: 5 wolves	Aug. 10–Apr. 30
Wolverine: 1 wolverine	Sept. 1–Mar. 31
Grouse (Spruce, Blue, Ruffed, and Sharp-tailed): 15 per day, 30 in possession	Aug. 10–Apr. 30
Ptarmigan (Rock, Willow, and White-tailed): 20 per day, 40 in possession	Aug. 10–Apr. 30
Trapping	
Beaver:	
Unit 9(B)—40 beaver per season; however, no more than 20 may be taken between Apr. 1–May 31	Jan. 1–May 31.
Remainder of Unit 9—40 beaver per season; however, no more than 20 may be taken between Apr. 1–Apr. 30	Jan. 1–Apr. 30.
Coyote: No limit	Nov. 10–Mar. 31.
Fox, Arctic (Blue and White): No limit	Nov. 10–Feb. 28.
Fox, Red (including Cross, Black and Silver Phases): No limit	Nov. 10–Feb. 28.
Lynx: No limit	Nov. 10–Feb. 28.
Marten: No limit	Nov. 10–Feb. 28.
Mink and Weasel: No limit	Nov. 10–Feb. 28.
Muskrat: No limit	Nov. 10–June 10.
Otter: No limit	Nov. 10–Mar. 31.
Wolf: No limit	Nov. 10–Mar. 31.
Wolverine: No limit	Nov. 10–Feb. 28.

(10) *Unit 10.* (i) Unit 10 consists of the Aleutian Islands, Unimak Island and the Pribilof Islands.

(ii) On Otter Island in the Pribilof Islands the taking of any wildlife species for subsistence uses is prohibited.

Harvest limits	Open season
Hunting	
Caribou:	
Unit 10—Unimak Island only	No open season.
Remainder of Unit 10—No limit	July 1–June 30.
Coyote: 2 coyotes	Sept. 1–Apr. 30.
Fox, Arctic (Blue and White Phase): No limit	July 1–June 30.
Fox, Red (including Cross, Black and Silver Phases): 2 foxes	Sept. 1–Feb. 15.
Hare (Snowshoe and Tundra): No limit	July 1–June 30.
Wolf: 5 wolves	Aug. 10–Apr. 30.
Wolverine: 1 wolverine	Sept. 1–Mar. 31.
Ptarmigan (Rock, Willow, and White-tailed): 20 per day, 40 in possession	Aug. 10—Apr. 30.
Trapping	
Coyote: 2 coyotes	Sept. 1–Apr. 30.
Fox, Arctic (Blue and White Phase): No limit	July 1–June 30.
Fox, Red (including Cross, Black and Silver Phases): 2 foxes	Sept. 1–Feb. 15.
Mink and Weasel: No limit	Nov. 10–Feb. 28.
Muskrat: No limit	Nov. 10–June 10.
Otter: No limit	Nov. 10–Mar. 31.
Wolf: No limit	Nov. 10–Mar. 31.
Wolverine: No limit	Nov. 10–Feb. 28.

(11) *Unit 11.* Unit 11 consists of that area draining into the headwaters of the Copper River south of Suslota Creek and the area drained by all tributaries into the east bank of the Copper River between the confluence of Suslota Creek with the Slana River and Miles Glacier.

(i) Unit-specific regulations:

(A) Bait may be used to hunt black bear between April 15 and June 15;

(B) A Federally-qualified subsistence user (recipient) may designate another Federally-qualified subsistence user to take caribou and moose on his or her behalf. The designated hunter must obtain a designated hunter permit and

must return a completed harvest report. The designated hunter may hunt for any number of recipients but may have no more than two harvest limits in his/her possession at any one time.

(ii) [Reserved]

Harvest limits	Open season
Hunting	
Black Bear: 3 bears	July 1–June 30.
Caribou: Unit 11	No open season.
Sheep:	
1 sheep	Aug. 10–Sept. 20.
1 sheep by Federal registration permit only by persons 60 years of age or older. No designated hunter permits will be issued for this hunt.	Sept. 21–Oct. 20.
Goat: Unit 11—that portion within the Wrangell-St. Elias National Park and Preserve—1 goat by Federal registration permit only. Federal public lands will be closed to the harvest of goats when a total of 45 goats have been harvested between Federal and State hunts.	Aug. 25–Dec. 31.
Moose: 1 antlered bull	Aug. 25–Sept. 20.
Coyote: 2 coyotes	Sept. 1—Apr. 30.
Fox, Red (including Cross, Black and Silver Phases): 2 foxes	Sept. 1–Feb. 15.
Hare (Snowshoe and Tundra): No limit	July 1–June 30.
Lynx: 2 lynx	Dec. 15–Jan. 15.
Wolf: 5 wolves	Aug. 10–Apr. 30.
Wolverine: 1 wolverine	Sept. 1–Jan. 31.
Grouse (Spruce, Blue, Ruffed, and Sharp-tailed): 15 per day, 30 in possession	Aug. 10–Mar. 31.
Ptarmigan (Rock, Willow, and White-tailed): 20 per day, 40 in possession.	Aug. 10–Mar. 31.
Trapping	
Beaver: 30 beaver per season	Nov. 10–Apr. 30.
Coyote: No limit	Nov. 10–Mar. 31.
Fox, Red (including Cross, Black and Silver Phases): No limit	Nov. 10–Feb. 28.
Lynx: No limit	Dec. 1–Feb. 15.
Marten: No limit	Nov. 10–Jan. 31.
Mink and Weasel: No limit	Nov. 10–Jan. 31.
Muskrat: No limit	Nov. 10–June 10.
Otter: No limit	Nov. 10–Mar. 31.
Wolf: No limit	Nov. 10–Mar. 31.
Wolverine: No limit	Nov. 10–Jan. 31.

(12) *Unit 12.* Unit 12 consists of the Tanana River drainage upstream from the Robertson River, including all drainages into the east bank of the Robertson River, and the White River drainage in Alaska, but excluding the Ladue River drainage.

(i) Unit-specific regulations:

(A) Bait may be used to hunt black bear between April 15 and June 30;

(B) Trapping of wolves in Unit 12 during April and October with a steel trap, or with a snare using cable smaller than 3/32 inch diameter, is prohibited;

(C) A Federally-qualified subsistence user (recipient) may designate another Federally-qualified subsistence user to take caribou and moose on his or her behalf. The designated hunter must obtain a designated hunter permit and must return a completed harvest report. The designated hunter may hunt for any number of recipients but may have no more than two harvest limits in his/her possession at any one time.

(ii) [Reserved]

Harvest limits	Open season
Hunting	
Black Bear: 3 bears	July 1–June 30.
Brown Bear: 1 bear	Aug. 10–June 30.
Caribou:	
Unit 12—that portion west of the Nabesna River within the drainages of Jack Creek, Platinum Creek, and Totschunda Creek—The taking of caribou is prohibited on public lands	No open season.
Unit 12—that portion lying east of the Nabesna River and Nabesna Glacier, and south of the Winter Trail running southeast from Pickerel Lake to the Canadian border—The taking of caribou is prohibited on public lands	No open season.
Remainder of Unit 12—1 bull	Sept. 1–Sept. 20.
1 bull caribou may be taken by a Federal registration permit during a winter season to be announced	Winter season to be announced by the Board.
Sheep: 1 ram with full curl horn or larger	Aug. 10–Sept. 20.
Moose:	
Unit 12—that portion within the Tetlin National Wildlife Refuge and those lands within the Wrangell-St. Elias National Preserve north and east of a line formed by the Pickerel Lake Winter Trail from the Canadian border to the southern boundary of the Tetlin National Wildlife Refuge—1 antlered bull; however during the Aug. 20–Aug. 28 season only bulls with spike/fork antlers may be taken. The November season is open by Federal registration permit only	Aug. 20–Aug. 28. Sept. 1–Sept. 15. Nov. 20–Nov. 30.

Harvest limits	Open season
Unit 12—that portion lying east of the Nabesna River and Nabesna Glacier and south of the Winter Trail running southeast from Pickerel Lake to the Canadian border—1 antlered bull; however during the Aug. 20–Aug. 28 season only bulls with spike/fork antlers may be taken	Aug. 20–Aug. 28. Sept. 1–Sept. 30.
Unit 12—Remainder—1 antlered bull; however during the Aug. 20–Aug. 28 season only bulls with spike/fork antlers may be taken	Aug. 20–Aug. 28. Sept. 1–Sept. 15.
Coyote: 2 coyotes	Sept. 1–Apr. 30.
Fox, Red (including Cross, Black and Silver Phases): 10 foxes; however, no more than 2 foxes may be taken prior to Oct. 1	Sept. 1–Mar. 15.
Hare (Snowshoe and Tundra): No limit	July 1–June 30.
Lynx: 2 lynx	Nov. 1–Jan. 31.
Wolf: 5 wolves	Aug. 10–Apr. 30.
Wolverine: 1 wolverine	Sept. 1–Mar. 31
Grouse (Spruce, Blue, Ruffed, and Sharp-tailed): 15 per day, 30 in possession	Aug. 10–Mar. 31.
Ptarmigan (Rock, Willow, and White-tailed): 20 per day, 40 in possession	Aug. 10–Apr. 30.
Trapping	
Beaver: 15 beaver per season	Nov. 1–Apr. 15.
Coyote: No limit	Nov. 1–Feb. 28.
Fox, Red (including Cross, Black and Silver Phases): No limit	Nov. 1–Feb. 28.
Lynx: No limit	Dec. 1–Feb. 28.
Marten: No limit	Nov. 1–Feb. 28.
Mink and Weasel: No limit	Nov. 1–Feb. 28.
Muskrat: No limit	Sept. 20–June 10.
Otter: No limit	Nov. 1–Apr. 15.
Wolf: No limit	Oct. 1–Apr. 30.
Wolverine: No limit	Nov. 1–Feb. 28.

(13) *Unit 13.* (i) Unit 13 consists of that area westerly of the east bank of the Copper River and drained by all tributaries into the west bank of the Copper River from Miles Glacier and including the Slana River drainages north of Suslota Creek; the drainages into the Delta River upstream from Falls Creek and Black Rapids Glacier; the drainages into the Nenana River upstream from the southeast corner of Denali National Park at Windy; the drainage into the Susitna River upstream from its junction with the Chulitna River; the drainage into the east bank of the Chulitna River upstream to its confluence with Tokositna River; the drainages of the Chulitna River (south of Denali National Park) upstream from its confluence with the Tokositna River; the drainages into the north bank of the Tokositna River upstream to the base of the Tokositna Glacier; the drainages into the Tokositna Glacier; the drainages into the east bank of the Susitna River between its confluences with the Talkeetna and Chulitna Rivers; the drainages into the north bank of the Talkeetna River; the drainages into the east bank of the Chickaloon River; the drainages of the Matanuska River above its confluence with the Chickaloon River:

(A) Unit 13(A) consists of that portion of Unit 13 bounded by a line beginning at the Chickaloon River bridge at Mile 77.7 on the Glenn Highway, then along the Glenn Highway to its junction with the Richardson Highway, then south along the Richardson Highway to the foot of Simpson Hill at Mile 111.5, then east to the east bank of the Copper River, then northerly along the east bank of the Copper River to its junction with the Gulkana River, then northerly along the west bank of the Gulkana River to its junction with the West Fork of the Gulkana River, then westerly along the west bank of the West Fork of the Gulkana River to its source, an unnamed lake, then across the divide into the Tyone River drainage, down an unnamed stream into the Tyone River, then down the Tyone River to the Susitna River, then down the southern bank of the Susitna River to the mouth of Kosina Creek, then up Kosina Creek to its headwaters, then across the divide and down Aspen Creek to the Talkeetna River, then southerly along the boundary of Unit 13 to the Chickaloon River bridge, the point of beginning;

(B) Unit 13(B) consists of that portion of Unit 13 bounded by a line beginning at the confluence of the Copper River and the Gulkana River, then up the east bank of the Copper River to the Gakona River, then up the Gakona River and Gakona Glacier to the boundary of Unit 13, then westerly along the boundary of Unit 13 to the Susitna Glacier, then southerly along the west bank of the Susitna Glacier and the Susitna River to the Tyone River, then up the Tyone River and across the divide to the headwaters of the West Fork of the Gulkana River, then down the West Fork of the Gulkana River to the confluence of the Gulkana River and the Copper River, the point of beginning;

(C) Unit 13(C) consists of that portion of Unit 13 east of the Gakona River and Gakona Glacier;

(D) Unit 13(D) consists of that portion of Unit 13 south of Unit 13(A);

(E) Unit 13(E) consists of the remainder of Unit 13.

(ii) Within the following areas, the taking of wildlife for subsistence uses is prohibited or restricted on public lands:

(A) lands within Mount McKinley National Park as it existed prior to December 2, 1980 are closed to subsistence. Subsistence uses as authorized by this paragraph (k)(13) are permitted in Denali National Preserve and lands added to Denali National Park on December 2, 1980;

(B) use of motorized vehicles or pack animals for hunting is prohibited from Aug. 5—Aug. 25 in the Delta Controlled Use Area, the boundary of which is defined as: a line beginning at the confluence of Miller Creek and the Delta River, then west to vertical angle bench mark Miller, then west to include all drainages of Augustana Creek and Black Rapids Glacier, then north and east to include all drainages of McGinnis Creek to its confluence with the Delta River, then east in a straight line across the Delta River to Mile 236.7 Richardson Highway, then north along the Richardson Highway to its junction with the Alaska Highway, then east along the Alaska Highway to the west bank of the Johnson River, then south along the west bank of the Johnson River and Johnson Glacier to the head of the Cantwell Glacier, then west along the

north bank of the Canwell Glacier and Miller Creek to the Delta River;

(C) except for access and transportation of harvested wildlife on Sourdough and Haggard Creeks, Meiers Lake trails, or other trails designated by the Board, the use of motorized vehicles for subsistence hunting, is prohibited in the Sourdough Controlled Use Area. The Sourdough Controlled Use Area consists of that portion of Unit 13(B) bounded by a line beginning at the confluence of Sourdough Creek and the Gulkana River, then northerly along Sourdough Creek to the Richardson Highway at approximately Mile 148, then northerly along the Richardson Highway to the Meiers Creek Trail at approximately Mile 170, then westerly along the trail to the Gulkana River, then southerly along the east bank of the Gulkana River to its confluence with Sourdough Creek, the point of beginning.

(iii) Unit-specific regulations:

(A) Bait may be used to hunt black bear between April 15 and June 15;

(B) A Federally-qualified subsistence user (recipient) may designate another Federally-qualified subsistence user to take caribou and moose on his or her behalf. The designated hunter must obtain a designated hunter permit and must return a completed harvest report. The designated hunter may hunt for any number of recipients but may have no more than two harvest limits in his/her possession at any one time.

Harvest limits	Open season
Hunting	
Black Bear: 3 bears	July 1–June 30.
Caribou: 2 caribou by Federal registration permit only. Hunting within the Trans-Alaska Oil Pipeline right-of-way is prohibited. The right-of-way is identified as the area occupied by the pipeline (buried or above ground) and the cleared area 25 feet on either side of the pipeline.	Aug. 10–Sept. 30. Oct. 21–Mar. 31
Sheep: Unit 13—excluding Unit 13(D) and the Tok and Delta Management Areas—1 ram with 7/8 curl horn	Aug. 10–Sept. 20.
Moose:	
Unit 13(E)—1 antlered bull moose by Federal registration permit only; only 1 permit will be issued per household	Aug. 1–Sept. 20.
Unit 13—Remainder—1 antlered bull moose by Federal registration permit only	Aug. 1–Sept. 20.
Coyote: 2 coyotes	Sept. 1–Apr. 30.
Fox, Red (including Cross, Black and Silver Phases): 2 foxes	Sept. 1–Feb. 15.
Hare (Snowshoe and Tundra): No limit	July 1–June 30.
Lynx: 2 lynx	Dec. 15–Jan. 15.
Wolf: 5 wolves	Aug. 10–Apr. 30.
Wolverine: 1 wolverine	Sept. 1–Jan. 31.
Grouse (Spruce, Blue, Ruffed, and Sharp-tailed): 15 per day, 30 in possession	Aug. 10–Mar. 31.
Ptarmigan (Rock, Willow, and White-tailed): 20 per day, 40 in possession	Aug. 10–Mar. 31.
Trapping	
Beaver: 30 beaver per season	Oct. 10–Apr. 30.
Coyote: No limit	Nov. 10–Mar. 31.
Fox, Red (including Cross, Black and Silver Phases): No limit	Nov. 10–Feb. 28.
Lynx: No limit	Dec. 1–Feb. 15.
Marten: No limit	Nov. 10–Jan. 31.
Mink and Weasel: No limit	Nov. 10–Jan. 31.
Muskrat: No limit	Nov. 10–June 10.
Otter: No limit	Nov. 10–Mar. 31.
Wolf: No limit	Nov. 10–Mar. 31.
Wolverine: No limit	Nov. 10–Jan. 31.

(14) *Unit 14.* (i) Unit 14 consists of drainages into the north side of Turnagain Arm west of and excluding the Portage Creek drainage, drainages into Knik Arm excluding drainages of the Chickaloon and Matanuska Rivers in Unit 13, drainages into the north side of Cook Inlet east of the Susitna River, drainages into the east bank of the Susitna River downstream from the Talkeetna River, and drainages into the south bank of the Talkeetna River:

(A) Unit 14(A) consists of drainages in Unit 14 bounded on the west by the Susitna River, on the north by Willow Creek, Peters Creek, and by a line from the head of Peters Creek to the head of the Chickaloon River, on the east by the eastern boundary of Unit 14, and on the south by Cook Inlet, Knik Arm, the south bank of the Knik River from its mouth to its junction with Knik Glacier, across the face of Knik Glacier and along the north side of Knik Glacier to the Unit 6 boundary;

(B) Unit 14(B) consists of that portion of Unit 14 north of Unit 14(A);

(C) Unit 14(C) consists of that portion of Unit 14 south of Unit 14(A).

(ii) In the following areas, the taking of wildlife for subsistence uses is prohibited or restricted on public lands:

(A) the Fort Richardson and Elmendorf Air Force Base Management Areas, consisting of the Fort Richardson and Elmendorf Military Reservation, are closed to the subsistence taking of wildlife;

(B) the Anchorage Management Area, consisting of all drainages south of Elmendorf and Fort Richardson military reservations and north of and including Rainbow Creek is closed to subsistence taking of wildlife.

(iii) Unit-specific regulations:

(A) In Unit 14(A), bait may be used to hunt black bear between April 15 and May 25.

(B) [Reserved]

Harvest limits	Open season
Hunting	
Black Bear: Unit 14(C)—1 bear	July 1–June 30.

Harvest limits	Open season
Coyote: Unit 14(C)—2 coyotes	Sept. 1–Apr. 30.
Fox, Red (including Cross, Black and Silver Phases): Unit 14(C)—2 foxes	Nov. 1–Feb. 15.
Hare (Snowshoe and Tundra): Unit 14(C)—5 hares per day	Sept. 8–Apr. 30.
Lynx: Unit 14(C)—2 lynx	Dec. 15–Jan. 15.
Wolf: Unit 14(C)—5 wolves	Aug. 10–Apr. 30.
Wolverine: Unit 14(C)—1 wolverine	Sept. 1–Mar. 31.
Grouse (Spruce, Blue, Ruffed, and Sharp-tailed): Unit 14(C)—5 per day, 10 in possession	Sept. 8–Mar. 31.
Ptarmigan (Rock, Willow, and White-tailed): Unit 14(C)—10 per day, 20 in possession	Sept. 8–Mar. 31.
Trapping	
Beaver: Unit 14(C)—that portion within the drainages of Glacier Creek, Kern Creek, Peterson Creek, the Twentymile River and the drainages of Knik River outside Chugach State Park—20 beaver per season.	Dec. 1–Apr. 15.
Coyote: Unit 14(C)—No limit	Nov. 10–Feb. 28.
Fox, Red (including Cross, Black and Silver Phases): Unit 14(C)—1 fox	Nov. 10–Feb. 28.
Lynx: Unit 14(C)—No limit	Dec. 15–Jan. 15.
Marten: Unit 14(C)—No limit	Nov. 10–Jan. 31.
Mink and Weasel: Unit 14(C)—No limit	Nov. 10–Jan. 31.
Muskrat: Unit 14(C)—No limit	Nov. 10–May 15.
Otter: Unit 14(C)—No limit	Nov. 10–Feb. 28.
Wolf: Unit 14(C)—No limit	Nov. 10–Feb. 28.
Wolverine: Unit 14(C)—No limit	Nov. 10–Feb. 28.

(15) *Unit 15.* (i) Unit 15 consists of that portion of the Kenai Peninsula and adjacent islands draining into the Gulf of Alaska, Cook Inlet and Turnagain Arm from Gore Point to the point where longitude line 150° 00′ W. crosses the coastline of Chickaloon Bay in Turnagain Arm, including that area lying west of longitude line 150° 00′ W. to the mouth of the Russian River, then southerly along the Chugach National Forest boundary to the upper end of Upper Russian Lake; and including the drainages into Upper Russian Lake west of the Chugach National Forest boundary:

(A) Unit 15(A) consists of that portion of Unit 15 north of the Kenai River and Skilak Lake;

(B) Unit 15(B) consists of that portion of Unit 15 south of the Kenai River and Skilak Lake, and north of the Kasilof River, Tustumena Lake, Glacier Creek, and Tustumena Glacier;

(C) Unit 15(C) consists of the remainder of Unit 15.

(ii) The Skilak Loop Management Area, which consists of that portion of Unit 15(A) bounded by a line beginning at the eastern most junction of the Sterling Highway and the Skilak Loop (milepost 76.3), then due south to the south bank of the Kenai River, then southerly along the south bank of the Kenai River to its confluence with Skilak Lake, then westerly along the north shore of Skilak Lake to Lower Skilak Lake Campground, then northerly along the Lower Skilak Lake Campground Road and the Skilak Loop Road to its western most junction with the Sterling Highway, then easterly along the Sterling Highway to the point of beginning, is closed to the taking of wildlife, except that grouse, ptarmigan, and hares may be taken only from October 1–March 1 by bow and arrow only.

(iii) Unit-specific regulations:

(A) Bait may be used to hunt black bear between April 15 and June 15;

(B) The Skilak Loop Wildlife Management Area is closed to subsistence trapping of furbearers;

(C) That portion of Unit 15(B) east of the Kenai River, Skilak Lake, Skilak River, and Skilak Glacier is closed to the trapping of marten;

(D) Taking a red fox in Unit 15 by any means other than a steel trap or snare is prohibited;

(E) A Federally-qualified subsistence user (recipient) may designate another Federally-qualified subsistence user to take moose on his or her behalf. The designated hunter must obtain a designated hunter permit and must return a completed harvest report. The designated hunter may hunt for any number of recipients but may have no more than two harvest limits in his/her possession at any one time.

Harvest limits	Open season
Hunting	
Black Bear	
Unit 15(C)—3 bears.	July 1–June 30
Unit 15 Remainder	No open season.
Moose:	
Unit 15(A)—excluding the Skilak Loop Wildlife Management Area.—1 antlered bull with spike-fork or 50-inch antlers or with 3 or more brow tines on either antler, by Federal registration permit only.	Aug. 18–Sept. 20.
Unit 15(A)—Skilak Loop Wildlife Management Area	No open season.
Unit 15(B) and (C)—1 antlered bull with spike-fork or 50-inch antlers or with 3 or more brow tines on either antler, by Federal registration permit only..	Aug. 10–Sept. 20.
Coyote: No limit	Sept. 1–Apr. 30
Hare (Snowshoe and Tundra): No limit	July 1–June 30.
Wolf:	
Unit 15—that portion within the Kenai National Wildlife Refuge—2 Wolves	Aug. 10–Apr. 30.
Unit 15—Remainder—5 Wolves	Aug. 10–Apr. 30.
Wolverine: 1 Wolverine	Sept. 1–Mar. 31.
Grouse (Spruce): 15 per day, 30 in possession	Aug. 10–Mar. 31.
Grouse (Ruffed)	No open season.

Harvest limits	Open season
Ptarmigan (Rock, Willow, and White-tailed):	
Unit 15(A) and (B)—20 per day, 40 in possession	Aug. 10–Mar. 31
Unit 15(C)—20 per day, 40 in possession	Aug. 10–Dec. 31
Unit 15(C)—5 per day, 10 in possession	Jan. 1–Mar. 31.
Trapping	
Beaver: 20 Beaver per season.	Dec. 1–Mar. 31.
Coyote: No limit.	Nov. 10–Feb. 28.
Fox, Red (including Cross, Black and Silver Phases): 1 Fox	Nov. 10–Feb. 28.
Lynx: No limit	Jan. 1–Feb. 15.
Marten:	
Unit 15(B)—that portion east of the Kenai River, Skilak Lake, Skilak River and Skilak Glacier	No open season.
Remainder of Unit 15—No limit	Nov. 10–Jan. 31.
Mink and Weasel: No limit	Nov. 10–Jan. 31.
Muskrat: No limit	Nov. 10–May 15.
Otter:	
Unit 15(A), (B)—No limit	Nov. 10–Jan. 31.
Unit 15(C)—No limit.	Nov. 10–Feb. 28.
Wolf: No limit.	Nov. 10–Feb. 28.
Wolverine: Unit 15(B) and (C)—No limit	Nov. 10–Feb. 28.

(16) *Unit 16.* (i) Unit 16 consists of the drainages into Cook Inlet between Redoubt Creek and the Susitna River, including Redoubt Creek drainage, Kalgin Island, and the drainages on the west side of the Susitna River (including the Susitna River) upstream to its confluence with the Chulitna River; the drainages into the west side of the Chulitna River (including the Chulitna River) upstream to the Tokositna River, and drainages into the south side of the Tokositna River upstream to the base of the Tokositna Glacier, including the drainage of the Kahiltna Glacier:

(A) Unit 16(A) consists of that portion of Unit 16 east of the east bank of the Yentna River from its mouth upstream to the Kahiltna River, east of the east bank of the Kahiltna River, and east of the Kahiltna Glacier;

(B) Unit 16(B) consists of the remainder of Unit 16.

(ii) The Mount McKinley National Park, as it existed prior to December 2, 1980, is closed to subsistence uses. Subsistence uses as authorized by this paragraph (k)(16) are permitted in Denali National Preserve and lands added to Denali National Park on December 2, 1980.

(iii) Unit-specific regulations:

(A) Bait may be used to hunt black bear between April 15 and June 15.

(B) [Reserved]

Harvest limits	Open season
Hunting	
Black Bear: 3 bears	July 1–June 30.
Caribou: 1 caribou	4Aug. 10–Oct. 31.
Moose:.	
Unit 16(B)—Redoubt Bay Drainages south and west of, and including the Kustatan River drainage—1 antlered bull	Sept. 1–Sept. 15.
Remainder of Unit 16(B)—1 moose; however, antlerless moose may be taken only from Sept. 25–Sept. 30 and from Dec. 1–Feb. 28 by Federal registration permit only.	Sept. 1–Sept. 30. Dec. 1–Feb. 28.
Coyote: 2 coyotes	Sept. 1–Apr. 30.
Fox, Red (including Cross, Black and Silver Phases): 2 foxes	Sept. 1–Feb. 15.
Hare (Snowshoe and Tundra): No limit	July 1–June 30.
Lynx: 2 lynx	Dec. 15–Jan. 15.
Wolf: 5 wolves	Aug. 10–Apr. 30.
Wolverine: 1 wolverine	Sept. 1–Mar. 31.
Grouse (Spruce, Blue, Ruffed, and Sharp-tailed): 15 per day, 30 in possession	Aug. 10–Mar. 31.
Ptarmigan (Rock, Willow, and White-tailed): 20 per day, 40 in possession	Aug. 10–Mar. 31.
Trapping	
Beaver: 30 beaver per season	Nov. 10–Apr. 30.
Coyote: No limit	Nov. 10–Mar. 31.
Fox, Red (including Cross, Black and Silver Phases): No limit	Nov. 10–Feb. 28.
Lynx: No limit	Dec. 15–Jan. 15.
Marten: No limit	Nov. 10–Jan. 31.
Mink and Weasel: No limit	Nov. 10–Jan. 31.
Muskrat: No limit	Nov. 10–June 10.
Otter: No limit	Nov. 10–Mar. 31.
Wolf: No limit	Nov. 10–Mar. 31.
Wolverine: No limit	Nov. 10–Feb. 28.

(17) *Unit 17.* (i) Unit 17 consists of drainages into Bristol Bay and the Bering Sea between Etolin Point and Cape Newenham, and all islands between these points including

Hagemeister Island and the Walrus Islands:

(A) Unit 17(A) consists of the drainages between Cape Newenham and Cape Constantine, and Hagemeister Island and the Walrus Islands;

(B) Unit 17(B) consists of the Nushagak River drainage upstream from, and including the Mulchatna River drainage, and the Wood River drainage upstream from the outlet of Lake Beverley;

(C) Unit 17(C) consists of the remainder of Unit 17.

(ii) In the following areas, the taking of wildlife for subsistence uses is prohibited or restricted on public lands:

(A) Except for aircraft and boats and in legal hunting camps, the Upper Mulchatna Controlled Use Area consisting of Unit 17(B), is closed from Aug. 1–Nov. 1 to the use of any motorized vehicle for hunting ungulates, bear, wolves and wolverine, including transportation of hunters and parts of ungulates, bear, wolves or wolverine;

(B) The Western Alaska Brown Bear Management Area which consists of Unit 17(A), that portion of 17(B) draining into Nuyakuk Lake and Tikchik Lake, Unit 18, and that portion of Unit 19(A) and (B) downstream of and including the Aniak River drainage, is open to brown bear hunting by State registration permit in lieu of a resident tag; no resident tag is required for taking brown bears in the Western Alaska Brown Bear Management Area, provided that the hunter has obtained a State registration permit prior to hunting.

(iii) Unit-specific regulations:

(A) Bait may be used to hunt black bear between April 15 and June 15.

(B) [Reserved]

Harvest limits	Open season
Hunting	
Black Bear: 2 bears	Aug. 1–May 31.
Brown Bear: Unit 17—1 bear by State registration permit only	Sept. 1–May 31.
Caribou:	
Unit 17(A) and (C)—that portion of 17(A) and (C) consisting of the Nushagak Peninsula south of the Igushik River, Tuklung River and Tuklung Hills, west to Tvativak Bay—2 caribou by Federal registration permit. Public lands are closed to the taking of caribou except by the residents of Togiak, Twin Hills, Manokotak, Aleknagik, Dillingham, Clark's Point, and Ekuk during seasons identified above.	Aug. 1–Sept. 30. Dec. 1–Mar. 31.
Unit 17(B) and (C)—that portion of 17(C) east of the Wood River and Woood River Lakes—5 caribou; however, no more than 2 bulls may be taken from Oct. 1–Nov. 30.	Aug. 1–Apr. 15.
Unit 17(A), remainder and 17(C), remainder—selected drainages; a harvest limit of up to 5 caribou will be determined at the time the season is announced.	Season, harvest limit, and hunt area to be announced by the Togiak National Wildife Refuge Manager between Aug. 1–Mar. 31.
Sheep: 1 ram with full curl horn or larger	Aug. 10–Sept. 20.
Moose:	
Unit 17(A)	No open season.
Unit 17(B)—that portion that includes all the Mulchatna River drainage upstream from and including the Chilchitna River drainage—1 bull by State registration permit only during the period Aug. 20–Aug. 31. During the period Sept. 1–Sept. 15 only a spike/fork bull or a bull with 50-inch antlers or with 3 or more brow tines on one side may be taken with a State harvest ticket.	Aug. 20–Sept. 15.
Unit 17(C)—that portion that includes the Iowithla drainage and Sunshine Valley and all lands west of Wood River and south of Aleknagik Lake—1 bull by State registration permit only during the period Aug. 20–Aug. 31. During the period Sept. 1–Sept. 15 only a spike/fork bull or a bull with 50-inch antlers or with 3 or more brow tines on one side may be taken with a State harvest ticket.	Aug. 20–Sept. 15.
Remainder of Unit 17(B) and (C)—1 bull by State registration permit only during the periods Aug. 20–Aug. 31 and Dec. 1–Dec. 31. During the period Sept. 1–Sept. 15 only a spike/fork bull or a bull with 50-inch antlers or with 3 or more brow tines on one side may be taken with a State harvest ticket.	Aug. 20–Sept. 15. Dec. 1–Dec. 31.
Coyote: 2 coyotes	Sept. 1–Apr. 30.
Fox, Arctic (Blue and White Phase): No limit	Dec. 1–Mar. 15.
Fox, Red (including Cross, Black and Silver Phases): 2 foxes	Sept. 1–Feb. 15.
Hare (Snowshoe and Tundra): No limit	July 1–June 30.
Lynx: 2 lynx	Nov. 10–Feb. 28.
Wolf: 5 wolves	Aug. 10–Apr. 30.
Wolverine: 1 wolverine	Sept. 1–Mar. 31.
Grouse (Spruce, Blue, Ruffed, and Sharp-tailed): 15 per day, 30 in possession	Aug. 10–Apr. 30.
Ptarmigan (Rock, Willow, and White-tailed): 20 per day, 40 in possession	Aug. 10–Apr. 30.
Trapping	
Beaver: Unit 17—40 beaver per season	Nov. 10–Feb. 28.
Coyote: No limit	Nov. 10–Mar. 31.
Fox, Arctic (Blue and White Phase): No limit	Nov. 10–Mar. 31.
Fox, Red (including Cross, Black and Silver Phases): No limit	Nov. 10–Mar. 31.
Lynx: No limit	Nov. 10–Mar. 31.
Marten: No limit	Nov. 10–Feb. 28.
Mink and Weasel: No limit	Nov. 10–Feb. 28.
Muskrat: 2 muskrats	Nov. 10–Feb. 28.
Otter: No limit	Nov. 10–Feb. 28.
Wolf: No limit	Nov. 10–Mar. 31.

Harvest limits	Open season
Wolverine: No limit	Nov. 10–Feb. 28.

(18) *Unit 18.* (i) Unit 18 consists of that area draining into the Yukon and Kuskokwim Rivers downstream from a straight line drawn between Lower Kalskag and Paimiut and the drainages flowing into the Bering Sea from Cape Newenham on the south to and including the Pastolik River drainage on the north; Nunivak, St. Matthew, and adjacent islands between Cape Newenham and the Pastolik River.

(ii) In the following areas, the taking of wildlife for subsistence uses is prohibited or restricted on public lands:

(A) The Kalskag Controlled Use Area which consists of that portion of Unit 18 bounded by a line from Lower Kalskag on the Kuskokwim River, northwesterly to Russian Mission on the Yukon River, then east along the north bank of the Yukon River to the old site of Paimiut, then back to Lower Kalskag is closed to the use of aircraft for hunting any ungulate, bear, wolf, or wolverine, including the transportation of any hunter and ungulate, bear, wolf, or wolverine part; however, this does not apply to transportation of a hunter or ungulate, bear, wolf, or wolverine part by aircraft between publicly owned airports in the Controlled Use Area or between a publicly owned airport within the Area and points outside the Area;

(B) The Western Alaska Brown Bear Management Area which consists of Unit 17(A), that portion of 17(B) draining into Nuyakuk Lake and Tikchik Lake, Unit 18, and that portion of Unit 19(A) and (B) downstream of and including the Aniak River drainage, is open to brown bear hunting by State registration permit in lieu of a resident tag; no resident tag is required for taking brown bears in the Western Alaska Brown Bear Management Area, provided that the hunter has obtained a State registration permit prior to hunting.

(iii) Unit-specific regulations:

(A) A firearm may be used to take beaver under a trapping license in Unit 18 from Apr. 1–Jun. 10;

(B) A Federally-qualified subsistence user (recipient) may designate another Federally-qualified subsistence user to take caribou south of the Yukon River on his or her behalf. The designated hunter must obtain a designated hunter permit and must return a completed harvest report. The designated hunter may hunt for any number of recipients but may have no more than two harvest limits in his/her possession at any one time.

Harvest limits	Open season
Hunting	
Black Bear: 3 bears.	July 1–June 30.
Brown Bear: 1 bear by State registration permit only	Sept. 1–May 31.
Caribou:	
Unit 18—that portion south of the Yukon River—A harvest limit of up to 5 caribou will be determined at the time the season is announced and will be based on the management objectives in the ''Qavilnguut (Kilbuck) Caribou Herd Cooperative Management Plan.'' The season will be closed when the total harvest reaches guidelines as described in the approved ''Qavilnguut (Kilbuck) Caribou Herd Cooperative Management Plan''.	Season to be announced by the Yukon Delta National Wildlife Refuge Manager between Aug. 25 and Mar. 31.
Unit 18—that portion north of the Yukon River—5 caribou per day.	Aug. 1–Mar. 31.
Remainder of Unit 18	No open season.
Moose:	
Unit 18—that portion north and west of a line from Cape Romanzof to Kuzilvak Mountain, and then to Mountain Village, and west of, but not including, the Andreafsky River drainage—1 antlered bull.	Sept. 5–Sept. 25.
Unit 18—South of and including the Kanektok River drainages	No open season.
Unit 18—Kuskokwim River drainage—1 antlered bull. A 10-day hunt (1 bull, evidence of sex required) will be opened by announcement sometime between Dec. 1 and Feb. 28.	Aug. 25–Sept. 25. Winter season to be announced.
Remainder of Unit 18—1 antlered bull. A 10-day hunt (1 bull, evidence of sex required) will be opened by announcement sometime between Dec. 1 and Feb. 28.	Sept. 1–Sept. 30. Winter season to be announced.
Public lands in Unit 18 are closed to the hunting of moose, except by Federally-qualified rural Alaska residents during seasons identified above.	
Coyote: 2 coyotes	Sept. 1–Apr. 30.
Fox, Arctic (Blue and White Phase): 2 foxes	Sept. 1–Apr. 30.
Fox, Red (including Cross, Black and Silver Phases): 10 foxes; however, no more than 2 foxes may be taken prior to Oct. 1.	Sept. 1–Mar. 15.
Hare (Snowshoe and Tundra): No limit	July 1–June 30.
Lynx: 2 lynx	Nov. 10–Mar. 31.
Wolf: 5 wolves	Aug. 10–Apr. 30.
Wolverine: 1 wolverine	Sept. 1–Mar. 31.
Grouse (Spruce, Blue, Ruffed, and Sharp-tailed): 15 per day, 30 in possession	Aug. 10–Apr. 30.
Ptarmigan (Rock, Willow, and White-tailed): 20 per day, 40 in possession	Aug. 10–May 30.
Trapping	
Beaver: No limit	Nov. 1–June 10.
Coyote: No limit	Nov. 10–Mar. 31.
Fox, Arctic (Blue and White Phase): No limit	Nov. 10–Mar. 31.
Fox, Red (including Cross, Black and Silver Phases): No limit	Nov. 10–Mar. 31.
Lynx: No limit	Nov. 10–Mar. 31.

Harvest limits	Open season
Marten: No limit	Nov. 10–Mar. 31.
Mink and Weasel: No limit	Nov. 10–Jan. 31.
Muskrat: No limit	Nov. 10–June 10.
Otter: No limit	Nov. 10–Mar. 31.
Wolf: No limit	Nov. 10–Mar. 31.
Wolverine: No limit	Nov. 10–Mar. 31.

(19) *Unit 19.* (i) Unit 19 consists of the Kuskokwim River drainage upstream from a straight line drawn between Lower Kalskag and Piamiut:

(A) Unit 19(A) consists of the Kuskokwim River drainage downstream from and including the Moose Creek drainage on the north bank and downstream from and including the Stony River drainage on the south bank, excluding Unit 19(B);

(B) Unit 19(B) consists of the Aniak River drainage upstream from and including the Salmon River drainage, the Holitna River drainage upstream from and including the Bakbuk Creek drainage, that area south of a line from the mouth of Bakbuk Creek to the radar dome at Sparrevohn Air Force Base, including the Hoholitna River drainage upstream from that line, and the Stony River drainage upstream from and including the Can Creek drainage;

(C) Unit 19(C) consists of that portion of Unit 19 south and east of a line from Benchmark M#1.26 (approximately 1.26 miles south of the northwest corner of the original Mt. McKinley National Park boundary) to the peak of Lone Mountain, then due west to Big River, including the Big River drainage upstream from that line, and including the Swift River drainage upstream from and including the North Fork drainage;

(D) Unit 19(D) consists of the remainder of Unit 19.

(ii) In the following areas, the taking of wildlife for subsistence uses is prohibited or restricted on public land:

(A) Lands within Mount McKinley National Park as it existed prior to December 2, 1980, are closed to subsistence uses. Subsistence uses as authorized by this paragraph (k)(19) are permitted in Denali National Preserve and lands added to Denali National Park on December 2, 1980;

(B) The Upper Kuskokwim Controlled Use Area, which consists of that portion of Unit 19(D) upstream from the mouth of Big River including the drainages of the Big River, Middle Fork, South Fork, East Fork, and Tonzona River, and bounded by a line following the west bank of the Swift Fork (McKinley Fork) of the Kuskokwim River to 152° 50′ W. long., then north to the boundary of Denali National Preserve, then following the western boundary of Denali National Preserve north to its intersection with the Minchumina-Telida winter trail, then west to the crest of Telida Mountain, then north along the crest of Munsatli Ridge to elevation 1,610, then northwest to Dyckman Mountain and following the crest of the divide between the Kuskokwim River and the Nowitna drainage, and the divide between the Kuskokwim River and the Nixon Fork River to Loaf bench mark on Halfway Mountain, then south to the west side of Big River drainage, the point of beginning, is closed during moose hunting seasons to the use of aircraft for hunting moose, including transportation of any moose hunter or moose part; however, this does not apply to transportation of a moose hunter or moose part by aircraft between publicly owned airports in the Controlled Use Area, or between a publicly owned airport within the area and points outside the area;

(C) The Western Alaska Brown Bear Management Area, which consists of Unit 17(A), that portion of 17(B) draining into Nuyakuk Lake and Tikchik Lake, Unit 18, and that portion of Unit 19(A) and (B) downstream of and including the Aniak River drainage, is open to brown bear hunting by State registration permit in lieu of a resident tag; no resident tag is required for taking brown bears in the Western Alaska Brown Bear Management Area, provided that the hunter has obtained a State registration permit prior to hunting.

(iii) Unit-specific regulations:

(A) Bait may be used to hunt black bear between April 15 and June 30.

(B) [Reserved]

Harvest limits	Open season
Hunting	
Black Bear: 3 bears.	July 1–June 30.
Brown Bear:	
Unit 19(A) and (B) that portion which is downstream of and including the Aniak River drainage—1 bear	Sept. 1–May 31.
Remainder of Unit 19(A), (B), and (D)—1 bear every four regulatory years	Sept. 10–May 25.
Caribou:	
Unit 19(A) north of Kuskokwim River—1 caribou	Aug. 10–Sept. 30. Nov. 1–Feb. 28.
Unit 19(A) south of the Kuskokwim River, and Unit 19(B) (excluding rural Alaska residents of Lime Village)—5 caribou.	Aug.1–Apr. 15.
Unit 19(C)—1 caribou	Aug. 10–Oct. 10.
Unit 19(D) south and east of the Kuskokwim River and North Fork of the Kuskokwim River—1 caribou	Aug. 10–Sept. 30. Nov. 1–Jan. 31.
Remainder of Unit 19(D)—1 caribou	Aug. 10–Sept. 30.
Unit 19—Rural Alaska residents domiciled in Lime Village only; no individual harvest limit but a village harvest quota of 200 caribou; cows and calves may not be taken from Apr. 1–Aug. 9. Reporting will be by a community reporting system..	July 1–June 30.
Sheep: 1 ram with 7/8 curl	Aug. 10–Sept. 20.
Moose:	
Unit 19—Rural Alaska residents of Lime Village only—No individual harvest limit, but a village harvest quota of 40 moose (including those taken under the State Tier II system); either sex. Reporting will be by a community reporting system.	July 1–June 30.

Harvest limits	Open season
Unit 19(A)—that portion north of the Kuskokwim River upstream from, but not including the Kolmakof River drainage and south of the Kuskokwim River upstream from, but not including the Holokuk River drainage—1 moose; however, antlerless moose may be taken only during the Feb. 1—Feb. 10 season.	Sept. 1–Sept. 20. Nov. 20–Nov. 30. Jan. 1–Jan. 10. Feb. 1–Feb. 10.
Remainder of Unit 19(A)—1 bull	Sept. 1–Sept. 20. Nov. 20–Nov. 30. Jan. 1–Jan. 10. Feb. 1–Feb. 10.
Unit 19(B)—1 antlered bull	Sept. 1–Sept. 30.
Unit 19(C)—1 antlered bull	Sept. 1–Oct. 10.
Unit 19(C)—1 bull by State registration permit	Jan. 15–Feb. 15.
Unit 19(D)—that portion of the Upper Kuskokwim Controlled Use Area within the North Fork drainage upstream from the confluence of the South Fork to the mouth of the Swift Fork—1 antlered bull.	Sept. 1–Sept. 30.
Unit 19(D)—remainder of the Upper Kuskokwim Controlled Use Area—1 bull	Sept. 1–Sept. 30. Dec. 1–Feb. 28.
Remainder of Unit 19(D)—1 antlered bull	Sept. 1–Sept. 30. Dec. 1–Dec. 15.
Coyote: 2 coyotes	Sept. 1–Apr. 30.
Fox, Red (including Cross, Black and Silver Phases): 10 foxes; however, no more than 2 foxes may be taken prior to Oct. 1.	Sept. 1–Mar. 15.
Hare (Snowshoe and Tundra): No limit	July 1–June 30.
Lynx: 2 lynx	Nov. 1–Feb. 28.
Wolf: 5 wolves	Aug. 10–Apr. 30.
Wolverine: 1 wolverine	Sept. 1–Mar. 31.
Grouse (Spruce, Blue, Ruffed, and Sharp-tailed): 15 per day, 30 in possession	Aug. 10–Apr. 30.
Ptarmigan (Rock, Willow, and White-tailed): 20 per day, 40 in possession	Aug. 10–Apr. 30.
Trapping	
Beaver: No limit	Nov. 1–Jun. 10.
Coyote: No limit	Nov. 1–Mar. 31.
Fox, Red (including Cross, Black and Silver Phases): No limit	Nov. 1–Mar. 31.
Lynx: No limit	Nov. 1–Feb. 28.
Marten: No limit	Nov. 1–Feb. 28.
Mink and Weasel: No limit	Nov. 1–Feb. 28.
Muskrat: No limit	Nov. 1–June 10.
Otter: No limit	Nov. 1–Apr. 15.
Wolf: No limit	Nov. 1–Apr. 30.
Wolverine: No limit	Nov. 1–Mar. 31.

(20) *Unit 20.* (i) Unit 20 consists of the Yukon River drainage upstream from and including the Tozitna River drainage to and including the Hamlin Creek drainage, drainages into the south bank of the Yukon River upstream from and including the Charley River drainage, the Ladue River and Fortymile River drainages and the Tanana River drainage north of Unit 13 and downstream from the east bank of the Robertson River:

(A) Unit 20(A) consists of that portion of Unit 20 bounded on the south by the Unit 13 boundary, bounded on the east by the west bank of the Delta River, bounded on the north by the north bank of the Tanana River from its confluence with the Delta River downstream to its confluence with the Nenana River, and bounded on the west by the east bank of the Nenana River;

(B) Unit 20(B) consists of drainages into the north bank of the Tanana River from and including Hot Springs Slough upstream to and including the Banner Creek drainage;

(C) Unit 20(C) consists of that portion of Unit 20 bounded on the east by the east bank of the Nenana River and on the north by the north bank of the Tanana River downstream from the Nenana River;

(D) Unit 20(D) consists of that portion of Unit 20 bounded on the east by the east bank of the Robertson River and on the west by the west bank of the Delta River, and drainages into the north bank of the Tanana River from its confluence with the Robertson River downstream to, but excluding the Banner Creek drainage;

(E) Unit 20(E) consists of drainages into the south bank of the Yukon River upstream from and including the Charley River drainage, and the Ladue River drainage;

(F) Unit 20(F) consists of the remainder of Unit 20.

(ii) In the following areas, the taking of wildlife for subsistence uses is prohibited or restricted on public land:

(A) Lands within Mount McKinley National Park as it existed prior to December 2, 1980, are closed to subsistence uses. Subsistence uses as authorized by this paragraph (k)(20) are permitted in Denali National Preserve and lands added to Denali National Park on December 2, 1980;

(B) Use of motorized vehicles or pack animals for hunting is prohibited from Aug. 5–Aug. 25 in the Delta Controlled Use Area, the boundary of which is defined as: a line beginning at the confluence of Miller Creek and the Delta River, then west to vertical angle bench mark Miller, then west to include all drainages of Augustana Creek and Black Rapids Glacier, then north and east to include all drainages of McGinnis Creek to its confluence with the Delta River, then east in a straight line across the Delta River to Mile 236.7 Richardson Highway, then north along the Richardson Highway to its junction with the Alaska Highway, then east along the Alaska Highway to the west bank of the Johnson River, then south along the west bank of the Johnson River and Johnson Glacier to the head of the Canwell Glacier, then west along the north bank of the Canwell Glacier and Miller Creek to the Delta River;

(C) The Dalton Highway Corridor Management Area, which consists of those portions of Units 20, 24, 25, and

26 extending five miles from each side of the Dalton Highway from the Yukon River to milepost 300 of the Dalton Highway, is closed to the use of motorized vehicles, except aircraft and boats, and to licensed highway vehicles, snowmobiles, and firearms except as provided below. The use of snowmobiles is authorized only for the subsistence taking of wildlife by residents living within the Dalton Highway Corridor Management Area. The use of licensed highway vehicles is limited only to designated roads within the Dalton Highway Corridor Management Area. The use of firearms within the Corridor is authorized only for the residents of Alatna, Allakaket, Anaktuvuk Pass, Bettles, Evansville, Stevens Village, and residents living within the Corridor;

(D) The Glacier Mountain Controlled Use Area, which consists of that portion of Unit 20(E) bounded by a line beginning at Mile 140 of the Taylor Highway, then north along the highway to Eagle, then west along the cat trail from Eagle to Crooked Creek, then from Crooked Creek southwest along the west bank of Mogul Creek to its headwaters on North Peak, then west across North Peak to the headwaters of Independence Creek, then southwest along the west bank of Independence Creek to its confluence with the North Fork of the Fortymile River, then easterly along the south bank of the North Fork of the Fortymile River to its confluence with Champion Creek, then across the North Fork of the Fortymile River to the south bank of Champion Creek and easterly along the south bank of Champion Creek to its confluence with Little Champion Creek, then northeast along the east bank of Little Champion Creek to its headwaters, then northeasterly in a direct line to Mile 140 on the Taylor Highway, is closed to the use of any motorized vehicle for hunting from August 5–September 20; however, this does not prohibit motorized access via, or transportation of harvested wildlife on, the Taylor Highway or any airport;

(E) The Minto Flats Management Area, which consists of that portion of Unit 20 bounded by the Elliot Highway beginning at Mile 118, then northeasterly to Mile 96, then east to the Tolovana Hotsprings Dome, then east to the Winter Cat Trail, then along the Cat Trail south to the Old Telegraph Trail at Dunbar, then westerly along the trail to a point where it joins the Tanana River three miles above Old Minto, then along the north bank of the Tanana River (including all channels and sloughs except Swan Neck Slough), to the confluence of the Tanana and Tolovana Rivers and then northerly to the point of beginning, is open to moose hunting by permit only;

(F) The Fairbanks Management Area, which consists of the Goldstream subdivision (SE¼SE¼, Section 28 and Section 33, Township 2 North, Range 1 West, Fairbanks Meridian) and that portion of Unit 20(B) bounded by a line from the confluence of Rosie Creek and the Tanana River, northerly along Rosie Creek to the divide between Rosie Creek and Cripple Creek, then down Cripple Creek to its confluence with Ester Creek, then up Ester Creek to its confluence with Ready Bullion Creek, then up Ready Bullion Creek to the summit of Ester Dome, then down Sheep Creek to its confluence with Goldstream Creek, then easterly along Goldstream Creek to its confluence with First Chance Creek, then up First Chance Creek to Tungsten Hill, then southerly along Steele Creek to its intersection with the Trans-Alaska Pipeline, then southerly along the pipeline right-of-way to the Chena River, then along the north bank of the Chena River to the Moose Creek dike, then southerly along Moose Creek dike to its intersection with the Tanana River, and then westerly along the north bank of the Tanana River to the point of beginning, is open to moose hunting by bow and arrow only.

(iii) Unit-specific regulations:

(A) Bait may be used to hunt black bear between April 15 and June 30;

(B) Trapping of wolves in Unit 20(E) during April and October with a steel trap, or with a snare using cable smaller than 3/32 inch diameter, is prohibited;

(C) The taking of up to three moose per regulatory year by the residents of Unit 20 and 21 is allowed for the celebration known as the Nuchalawoyya Potlatch, under the terms of a Federal registration permit. Permits will be issued to individuals only at the request of the Native Village of Tanana. This three moose limit is not cumulative with that permitted by the State.

Harvest limits	Open season
Hunting	
Black Bear: 3 bears	July 1–June 30.
Brown Bear:	
Unit 20(E)—1 bear	Aug. 10–June 30
Unit 20, remainder—1 bear every four regulatory years	Sept. 1–May 31.
Caribou:	
Unit 20(E)—1 bull by Federal registration permit only; the season will close when a combined State/Federal harvest quota of 150 for the Fortymile herd has been reached	Aug. 10–Sept. 30. Nov. 15–Feb. 28.
Unit 20(F)—Tozitna River drainage—1 caribou; however, only bull caribou may be taken Aug. 10–Sept. 30	Aug. 10–Sept. 30. Nov. 26–Dec. 10. Mar. 1–Mar. 15.
Unit 20(F)—south of the Yukon River—1 caribou	Dec. 1–Dec. 31.
Remainder of Unit 20(F)—1 bull	Aug. 10–Sept. 30.
Moose:	
Unit 20(A)—1 antlered bull	Sept. 1–Sept. 20.
Unit 20(B)—that portion within the Minto Flats Management Area—1 bull by Federal registration permit only	Sept. 1–Sept. 20. Jan. 10–Feb. 28.
Remainder of Unit 20(B)—1 antlered bull	Sept. 1–Sept. 20.
Unit 20(C)—that portion within Denali National Park and Preserve west of the Toklat River, excluding lands within Mount McKinley National Park as it existed prior to December 2, 1980—1 antlered bull; however, white-phased or partial albino (more than 50 percent white) moose may not be taken	Sept. 1–Sept. 30. Nov. 15–Dec. 15.
Remainder of Unit 20(C)—1 antlered bull; however, white-phased or partial albino (more than 50 percent white) moose may not be taken	Sept. 1–Sept. 30.
Unit 20(E)—that portion within Yukon Charley National Preserve—1 bull	Aug. 20–Sept. 30.
Unit 20(E)—that portion drained by the Ladue, Sixty-mile, and Forty-mile Rivers (all forks) from Mile 9½ to Mile 145 Taylor Highway, including the Boundary Cutoff Road—1 antlered bull; however during the period Aug. 20–Aug. 28 only a bull with Spike/fork antlers may be taken	Aug. 20–Aug. 28. Sept. 1–Sept. 15.

Harvest limits	Open season
Unit 20(F)—that portion within the Dalton Highway Corridor Management Area—1 antlered bull by Federal registration permit only	Sept. 1–Sept. 25.
Remainder of Unit 20(F)—1 antlered bull	Sept. 1–Sept. 25.
Coyote: 2 coyotes	Sept. 1–Apr. 30.
Fox, Red (including Cross, Black and Silver Phases): 10 foxes; however, no more than 2 foxes may be taken prior to Oct. 1	Sept. 1–Mar. 15.
Hare (Snowshoe and Tundra): No limit	July 1–June 30.
Lynx:	
Unit 20(E)—2 lynx	Nov. 1–Jan. 31.
Remainder of Unit 20—2 lynx	Dec. 1–Jan. 31.
Wolf: 10 wolves	Aug. 10–Apr. 30.
Wolverine: 1 wolverine	Sept. 1–Mar. 31.
Grouse (Spruce, Blue, Ruffed, and Sharp-tailed):	
Unit 20(D)—that portion south of the Tanana River and west of the Johnson River—15 per day, 30 in possession, provided that not more than 5 per day and 10 in possession are sharp-tailed grouse	Aug. 25–Mar. 31.
Unit 20—Remainder—15 per day, 30 in possession	Aug. 10–Mar. 31.
Ptarmigan (Rock, Willow, and White-tailed):	
Unit 20—those portions within five miles of Alaska Route 5 (Taylor Highway, both to Eagle and the Alaska-Canada boundary) and that portion of Alaska Route 4 (Richardson Highway) south of Delta Junction—20 per day, 40 in possession	Aug. 10–Mar. 31.
Unit 20—Remainder—20 per day, 40 in possession	Aug. 10–Apr. 30.
Trapping	
Beaver:	
Unit 20(A), 20(B), Unit 20(C), Unit 20(E), and 20(D)—that portion draining into the north bank of the Tanana River, including the islands in the Tanana River—25 beaver	Nov. 1–Apr. 15.
Remainder of Unit 20(D)—15 beaver	Feb. 1–Apr. 15.
Unit 20(F)—50 beaver	Nov. 1–Apr. 15.
Coyote:	
Unit 20(E)—No limit	Nov. 1–Feb. 28.
Remainder Unit 20—No limit	Nov. 1–Mar. 31.
Fox, Red (including Cross, Black and Silver Phases): No limit	Nov. 1–Feb. 28.
Lynx:	
Unit 20(A), (B), (D), (E), and (C) east of the Teklanika River—No limit	Dec. 1–Feb. 28.
Unit 20(F) and the remainder of 20(C)—No limit	Nov. 1–Feb. 28.
Marten: No limit	Nov. 1–Feb. 28.
Mink and Weasel: No limit	Nov. 1–Feb. 28.
Muskrat:	
Unit 20(E)—No limit	Sept. 20–June 10.
Remainder of Unit 20—No limit	Nov. 1–June 10.
Otter: No limit	Nov. 1–Apr. 15.
Wolf:	
Unit 20(E)—No limit	Oct. 1–Apr. 30
Remainder of Unit 20—No limit	Nov. 1–Mar. 31.
Wolverine: No limit	Nov. 1–Feb. 28.

(21) *Unit 21.* (i) Unit 21 consists of drainages into the Yukon River upstream from Paimiut to, but not including the Tozitna River drainage on the north bank, and to, but not including the Tanana River drainage on the south bank; and excluding the Koyukuk River drainage upstream from the Dulbi River drainage:

(A) Unit 21(A) consists of the Innoko River drainage upstream from and including the Iditarod River drainage, and the Nowitna River drainage upstream from the Little Mud River;

(B) Unit 21(B) consists of the Yukon River drainage upstream from Ruby and east of the Ruby-Poorman Road, downstream from and excluding the Tozitna River and Tanana River drainages, and excluding the Nowitna River drainage upstream from the Little Mud River, and excluding the Melozitna River drainage upstream from Grayling Creek;

(C) Unit 21(C) consists of the Melozitna River drainage upstream from Grayling Creek, and the Dulbi River drainage upstream from and including the Cottonwood Creek drainage;

(D) Unit 21(D) consists of the Yukon River drainage from and including the Blackburn Creek drainage upstream to Ruby, including the area west of the Ruby-Poorman Road, excluding the Koyukuk River drainage upstream from the Dulbi River drainage, and excluding the Dulbi River drainage upstream from Cottonwood Creek;

(E) Unit 21(E) consists of the Yukon River drainage from Paimiut upstream to, but not including the Blackburn Creek drainage, and the Innoko River drainage downstream from the Iditarod River drainage.

(ii) In the following areas, the taking of wildlife for subsistence uses is prohibited or restricted on public land:

(A) The Koyukuk Controlled Use Area, which consists of those portions of Units 21 and 24 bounded by a line from the north bank of the Yukon River at Koyukuk, then northerly to the confluences of the Honhosa and Kateel Rivers, then northeasterly to the confluences of Billy Hawk Creek and the Huslia River (65° 57′ N. lat., 156° 41′ W. long.), then easterly to the south end of Solsmunket Lake, then east to Hughes, then south to Little Indian River, then southwesterly to the crest of Hochandochtla Mountain, then southwest to the mouth of Cottonwood Creek then southwest to Bishop Rock, then westerly along the north bank of the Yukon River (including Koyukuk Island) to the point of beginning, is

closed during moose-hunting seasons to the use of aircraft for hunting moose, including transportation of any moose hunter or moose part; however, this does not apply to transportation of a moose hunter or moose part by aircraft between publicly owned airports in the controlled use area or between a publicly owned airport within the area and points outside the area; all hunters on the Koyukuk River passing the ADF&G operated check station at Ella's Cabin (15 miles upstream from the Yukon on the Koyukuk River) are required to stop and report to ADF&G personnel at the check station;

(B) The Paradise Controlled Use Area, which consists of that portion of Unit 21 bounded by a line beginning at the old village of Paimiut, then north along the west bank of the Yukon River to Paradise, then northwest to the mouth of Stanstrom Creek on the Bonasila River, then northeast to the mouth of the Anvik River, then along the west bank of the Yukon River to the lower end of Eagle Island (approximately 45 miles north of Grayling), then to the mouth of the Iditarod River, then down the east bank of the Innoko River to its confluence with Paimiut Slough, then south along the east bank of Paimiut Slough to its mouth, and then to the old village of Paimiut, is closed during moose hunting seasons to the use of aircraft for hunting moose, including transportation of any moose hunter or part of moose; however, this does not apply to transportation of a moose hunter or part of moose by aircraft between publicly owned airports in the Controlled Use Area or between a publicly owned airport within the area and points outside the area.

(iii) Unit-specific regulations:

(A) Bait may be used to hunt black bear between April 15 and June 30;

(B) A firearm may be used to take beaver with a trapping license in Unit 21(E) from Apr. 1–June 1;

(C) The taking of up to three moose per regulatory year by the residents of Unit 20 and 21 is allowed for the celebration known as the Nuchalawoyya Potlatch, under the terms of a Federal registration permit. Permits will be issued to individuals only at the request of the Native Village of Tanana. This three moose limit is not cumulative with that permitted by the State;

(D) The taking of up to three moose per regulatory year by the residents of Unit 21 is allowed for the celebration known as the Kaltag/Nulato Stickdance, under the terms of a Federal registration permit. Permits will be issued to individuals only at the request of the Native Village of Kaltag or Nulato. This three moose limit is not cumulative with that permitted by the State.

Harvest limits	Open season
Hunting	
Black Bear: 3 bears	July 1–June 30.
Brown Bear: 1 bear every four regulatory years	Sept. 1–May 31.
Caribou:	
Unit 21(A)—1 caribou	Aug. 10–Sept. 30. Dec. 10–Dec. 20.
Unit 21(B), (C), and (E)—1 caribou	Aug. 10–Sept. 30.
Unit 21(D)—North of the Yukon River and east of the Koyukuk River 1 caribou; however, 2 additional caribou may be taken during a winter season to be announced.	Aug. 10–Sept. 30. Winter season to be announced.
Unit 21(D)—Remainder (Western Arctic Caribou herd)—5 caribou per day; however, cow caribou may not be taken May 16–June 30.	July 1–June 30.
Moose:	
Unit 21(A)—1 bull	Aug. 20–Sept. 25. Nov. 1–Nov. 30.
Unit 21(B) and (C)—1 antlered bull	Sept. 5–Sept. 25.
Unit 21(D)—1 moose; moose may not be taken within one-half mile of the Yukon River during the February season. During the Sept. 1–Sept. 25 season a State registration permit is required within the Koyukuk Controlled Use Area.	Sept. 1–Sept. 25. Feg. 1–Feb. 10.
Unit 21(E)—1 moose; however, only bulls may be taken from Aug. 20–Sept. 25; moose may not be taken within one-half mile of the Innoko or Yukon River during the February season.	Aug. 20–Sept. 25. Feb. 1–Feb. 10.
Coyote: 2 coyotes	Sept. 1–Apr. 30.
Fox, Red (including Cross, Black and Silver Phases): 10 foxes; however, no more than 2 foxes may be taken prior to Oct. 1.	Sept. 1–Mar. 15.
Hare (Snowshoe and Tundra): No limit	July 1–June 30.
Lynx: 2 lynx	Nov. 1–Feb. 28.
Wolf: 5 wolves	Aug. 10–Apr. 30.
Wolverine: 1 wolverine	Sept. 1–Mar. 31.
Grouse (Spruce, Blue, Ruffed, and Sharp-tailed): 15 per day, 30 in possession	Aug. 10–Apr. 30.
Ptarmigan (Rock, Willow, and White-tailed): 20 per day, 40 in possession	Aug. 10–Apr. 30.
Trapping	
Beaver: Unit 21—No Limit	Nov. 1–June 10.
Coyote: No limit	Nov. 1–Mar. 31.
Fox, Red (including Cross, Black and Silver Phases): No limit	Nov. 1–Feb. 28.
Lynx: No limit	Nov. 1–Feb. 28.
Marten: No limit	Nov. 1–Feb. 28.
Mink and Weasel: No limit	Nov. 1–Feb. 28.
Muskrat: No limit	Nov. 1–June 10.
Otter: No limit	Nov. 1–Apr. 15.
Wolf: No limit	Nov. 1–Apr. 30.
Wolverine: No limit	Nov. 1–Mar. 31.

(22) *Unit 22.* (i) Unit 22 consists of Bering Sea, Norton Sound, Bering Strait, Chukchi Sea, and Kotzebue Sound drainages from, but excluding, the Pastolik River drainage in southern Norton Sound to, but not including, the Goodhope River drainage in Southern Kotzebue Sound, and all adjacent islands in the Bering Sea between the mouths of the Goodhope and Pastolik Rivers:

(A) Unit 22(A) consists of Norton Sound drainages from, but excluding, the Pastolik River drainage to, and including, the Ungalik River drainage, and Stuart and Besboro Islands;

(B) Unit 22(B) consists of Norton Sound drainages from, but excluding, the Ungalik River drainage to, and including, the Topkok Creek drainage;

(C) Unit 22(C) consists of Norton Sound and Bering Sea drainages from, but excluding, the Topkok Creek drainage to, and including, the Tisuk River drainage, and King and Sledge Islands;

(D) Unit 22(D) consists of that portion of Unit 22 draining into the Bering Sea north of, but not including, the Tisuk River to and including Cape York, and St. Lawrence Island;

(E) Unit 22(E) consists of Bering Sea, Bering Strait, Chukchi Sea, and Kotzebue Sound drainages from Cape York to, but excluding, the Goodhope River drainage, and including Little Diomede Island and Fairway Rock.

(ii) The Northwest Alaska Brown Bear Management Area, which consists of Unit 22, except 22(C), those portions of Unit 23, except the Baldwin Peninsula north of the Arctic Circle, Unit 24, and Unit 26(A) is open to brown bear hunting by State registration permit in lieu of a resident tag; no resident tag is required for taking brown bears in the Northwest Alaska Brown Bear Management Area, provided that the hunter has obtained a State registration permit prior to hunting; aircraft may not be used in the Northwest Alaska Brown Bear Management Area in any manner for brown bear hunting under the authority of a brown bear State registration permit, including transportation of hunters, bears or parts of bears; however, this does not apply to transportation of bear hunters or bear parts by regularly scheduled flights to and between communities by carriers that normally provide scheduled service to this area, nor does it apply to transportation of aircraft to or between publicly owned airports.

(iii) Unit-specific regulations:

(A) A firearm may be used to take beaver with a trapping license in Unit 22 during the established seasons;

(B) Coyote, incidentally taken with a trap or snare intended for red fox or wolf, may be used for subsistence purposes.

Harvest limits	Open season
Hunting	
Black Bear: 3 bears	July 1–June 30.
Brown Bear:	
Unit 22(A)—1 bear by State registration permit by residents of Unit 22(A) only	Sept. 1–May 31.
Unit 22(B)—1 bear by State registration permit by residents of Unit 22(B) only	Sept. 1–May 31.
Unit 22(C)	No open session.
Remainder of Unit 22—1 bear by State registration permit	Sept. 1–May 31.
Caribou: Unit 22(A) and (B)—5 caribou per day; however, cow caribou may not be taken May 16–June 30	July 1–June 30.
Moose:	
Unit 22(A)—1 bull; however, the period of Dec. 1–Jan. 31 is restricted to residents of Unit 22(A) only	Aug. 1–Sept. 30. Dec. 1–Jan. 31.
Unit 22(B)—1 moose; however, antlerless moose may be taken only from Dec. 1–Dec. 31; no person may take a cow accompanied by a calf.	Aug. 1–Jan. 31.
Unit 22(C)—1 antlered bull	Sept. 1–Sept. 14.
Unit 22(D)—that portion within the Kuzitrin River drainage—1 antlered bull	Aug. 1–Jan. 31.
Unit 22(D), remainder—1 moose; however, antlerless moose may be taken only from Dec. 1–Dec. 31; no person may take a cow accompanied by a calf.	Aug. 1–Jan. 31.
Unit 22(E)—1 moose; no person may take a cow accompanied by a calf	Aug. 1–Mar. 31.
Muskox:	
Unit 22(D)—1 bull by Federal registration permit or State Tier II permit. Federal public lands are closed to the taking of muskox except by Federally-qualified subsistence users. Twelve Federal permits may be issued in conjunction with the State Tier II hunt; the combined total of Federal and State permits will not exceed 36 permits. Six Federal permits will be issued for National Park Service lands and six for Bureau of Land Management lands.	Aug. 1–Mar. 15.
Unit 22(E)—1 bull by Federal registration permit or State Tier II permit. Federal public lands are closed to the taking of muskox except by Federally-qualified subsistence users. Nine Federal permits may be issued in conjunction with the State Tier II hunt; the combined total of Federal and State permits will not exceed 18 permits.	Aug. 1–Mar. 15.
Remainder of Unit 22	No open season.
Beaver:	
Unit 22(A), (B), (D), and (E)—50 beaver	Nov. 1–June 10.
Unit 22 Remainder	No open season.
Coyote: Federal public lands are closed to the taking of coyotes	No open season.
Fox, Arctic (Blue and White Phase): 2 foxes	Sept. 1–Apr. 30.
Fox, Red (including Cross, Black and Silver Phases): 10 foxes	Nov. 1–Apr. 15.
Hare (Snowshoe and Tundra): No limit	Sept. 1–Apr. 15.
Lynx: 2 lynx	Nov. 1–Apr. 15.
Marten:	
Unit 22(A) 22(B)—No limit	Nov. 1–Apr. 15.
Unit 22 Remainder	No open season.
Mink and Weasel: No limit	Nov. 1–Jan. 31.
Otter: No limit	Nov. 1–Apr. 15.
Wolf: No limit	Nov. 1–Apr. 15.
Wolverine: 3 wolverine	Sept. 1–Mar. 31.
Grouse (Spruce, Blue, Ruffed, and Sharp-tailed): 15 per day, 30 in possession	Aug. 10–Apr. 30.
Ptarmigan (Rock, Willow, and White-tailed):	
Unit 22(A) and 22(B) east of and including the Niukluk River drainage—40 per day, 80 in possession	Aug. 10–Apr. 30.

Harvest limits	Open season
Unit 22 Remainder—20 per day, 40 in possession	Aug. 10–Apr. 30.
Trapping	
Beaver:	
Unit 22(A), (B), (D), and (E)—50 beaver	Nov. 1–June 10.
Unit 22(C)	No open season.
Coyote: Federal public lands are closed to the taking of coyotes	No open season.
Fox, Arctic (Blue and White Phase): No limit	Nov. 1–Apr. 15.
Fox, Red (including Cross, Black and Silver Phases): No limit	Nov. 1–Apr. 15.
Lynx: No limit	Nov. 1–Apr. 15.
Marten: No limit	Nov. 1–Apr. 15.
Mink and Weasel: No limit	Nov. 1–Jan. 31.
Muskrat: No limit	Nov. 1–June 10.
Otter: No limit	Nov. 1–Apr. 15.
Wolf: No limit	Nov. 1–Apr. 15.
Wolverine: No limit	Nov. 1–Apr. 15.

(23) *Unit 23.* (i) Unit 23 consists of Kotzebue Sound, Chukchi Sea, and Arctic Ocean drainages from and including the Goodhope River drainage to Cape Lisburne.

(ii) In the following areas, the taking of wildlife for subsistence uses is prohibited or restricted on public land:

(A) The Noatak Controlled Use Area, which consists of that portion of Unit 23 in a corridor extending five miles on either side of the Noatak River beginning at the mouth of the Noatak River, and extending upstream to the mouth of Sapun Creek, is closed for the period August 25–September 15 to the use of aircraft in any manner either for hunting of ungulates, bear, wolves, or wolverine, or for transportation of hunters or harvested species. This does not apply to the transportation of hunters or parts of ungulates, bear, wolves, or wolverine by regularly scheduled flights to communities by carriers that normally provide scheduled air service;

(B) The Northwest Alaska Brown Bear Management Area, which consists of Unit 22, except 22(C), those portions of Unit 23, except the Baldwin Peninsula north of the Arctic Circle, Unit 24, and Unit 26(A) is open to brown bear hunting by State registration permit in lieu of a resident tag; no resident tag is required for taking brown bears in the Northwest Alaska Brown Bear Management Area, provided that the hunter has obtained a State registration permit prior to hunting; aircraft may not be used in the Northwest Alaska Brown Bear Management Area in any manner for brown bear hunting under the authority of a brown bear State registration permit, including transportation of hunters, bears or parts of bears; however, this does not apply to transportation of bear hunters or bear parts by regularly scheduled flights to and between communities by carriers that normally provide scheduled service to this area, nor does it apply to transportation of aircraft to or between publicly owned airports.

(iii) Unit-specific regulations:

(A) Caribou may be taken from a boat under power in Unit 23;

(B) Swimming caribou may be taken with a firearm using rimfire cartridges;

(C) A firearm may be used to take beaver with a trapping license in all of Unit 23 from Nov. 1–Jun. 10.

Harvest limits	Open season
Hunting	
Black Bear: 3 bears.	July 1–June 30.
Brown Bear:	
Unit 23—except the Baldwin Peninsula north of the Arctic Circle—1 bear by State registration permit	Sept. 1–May 31.
Remainder of Unit 23—1 bear every four regulatory years.	Sept. 1–Oct. 10. Apr. 15–May 25.
Caribou: 15 caribou per day; however, cow caribou may not be taken May 16–June 30	July 1–June 30.
Sheep:	
Unit 23—that portion west of Howard Pass and the Aniuk, Cutler and Redstone Rivers	No open season.
Remainder of Unit 23—1 ram with 7/8 curl horn or larger	Aug. 10–Sept. 20.
Remainder of Unit 23—1 sheep	Oct. 1–Apr. 30.
Moose:	
Unit 23—that portion north and west of and including the Singoalik River drainage, and all lands draining into the Kukpuk and Ipewik Rivers—1 moose; no person may take a cow accompanied by a calf.	July 1–Mar. 31.
Unit 23—that portion lying within the Noatak River drainage—1 moose; however, antlerless moose may be taken only from Nov. 1–Mar. 31; no person may take a cow accompanied by a calf.	Aug. 1–Sept. 15. Oct. 1–Mar. 31.
Remainder of Unit 23—1 moose; no person may take a cow accompanied by a calf	Aug. 1–Mar. 31.
Muskox:	
Unit 23 South of Kotzebue Sound and west of and including the Buckland River drainage—1 bull by Federal registration permit or State Tier II permit. Federal public lands are closed to the taking of muskox except by Federally-qualified subsistence users. Eight Federal permits may be issued in conjunction with the State Tier II hunt; the combined total of Federal and State permits will not exceed 10 permits.	Aug. 1–Mar. 15.
Remainder of Unit 23	No open season.
Coyote: 2 coyotes.	Sept. 1–Apr. 30.
Fox, Arctic (Blue and White Phase): 2 foxes	Sept. 1–Apr. 30.
Fox, Red (including Cross, Black and Silver Phases): 10 foxes; however, no more than 2 foxes may be taken prior to Oct. 1.	Sept. 1–Mar. 15.

Harvest limits	Open season
Hare (Snowshoe and Tundra): No limit	July 1–June 30.
Lynx: 2 lynx	Dec. 1–Jan. 15.
Wolf: 5 wolves	Nov. 10–Mar. 31.
Wolverine: 1 wolverine.	Sept. 1–Mar. 31.
Grouse (Spruce, Blue, Ruffed, and Sharp-tailed): 15 per day, 30 in possession	Aug. 10–Apr. 30.
Ptarmigan (Rock, Willow, and White-tailed): 20 per day, 40 in possession	Aug. 10–Apr. 30.
Trapping	
Beaver:	
Unit 23—the Kobuk and Selawik River drainages—50 beaver	Nov. 1–June 10.
Remainder of Unit 23–30 beaver	Nov. 1–June 10.
Coyote: No limit	Nov. 1–Apr. 15
Fox, Arctic (Blue and White Phase): No limit.	Nov. 1–Apr. 15.
Fox, Red (including Cross, Black and Silver Phases): No limit.	Nov. 1–Apr. 15.
Lynx: 3 lynx	Dec. 1–Jan. 15.
Marten: No limit	Nov. 1–Apr. 15.
Mink and Weasel: No limit	Nov. 1–Jan. 31.
Muskrat: No limit	Nov. 1–June 10.
Otter: No limit	Nov. 1–Apr. 15.
Wolf: No limit	Nov. 10–Mar. 31.
Wolverine: No limit	Nov. 1–Apr. 15.

(24) *Unit 24*. (i) Unit 24 consists of the Koyukuk River drainage upstream from but not including the Dulbi River drainage.

(ii) In the following areas, the taking of wildlife for subsistence uses is prohibited or restricted on public land:

(A) The Dalton Highway Corridor Management Area, which consists of those portions of Units 20, 24, 25, and 26 extending five miles from each side of the Dalton Highway from the Yukon River to milepost 300 of the Dalton Highway, is closed to the use of motorized vehicles, except aircraft and boats, and to licensed highway vehicles, snowmobiles, and firearms except as follows: The use of snowmobiles is authorized only for the subsistence taking of wildlife by residents living within the Dalton Highway Corridor Management Area. The use of licensed highway vehicles is limited only to designated roads within the Dalton Highway Corridor Management Area. The use of firearms within the Corridor is authorized only for the residents of Alatna, Allakaket, Anaktuvuk Pass, Bettles, Evansville, Stevens Village, and residents living within the Corridor;

(B) The Kanuti Controlled Use Area, which consists of that portion of Unit 24 bounded by a line from the Bettles Field VOR to the east side of Fish Creek Lake, to Old Dummy Lake, to the south end of Lake Todatonten (including all waters of these lakes), to the northernmost headwaters of Siruk Creek, to the highest peak of Double Point Mountain, then back to the Bettles Field VOR, is closed during moose-hunting seasons to the use of aircraft for hunting moose, including transportation of any moose hunter or moose part; however, this does not apply to transportation of a moose hunter or moose part by aircraft between publicly owned airports in the controlled use area or between a publicly owned airport within the area and points outside the area;

(C) The Koyukuk Controlled Use Area, which consists of those portions of Units 21 and 24 bounded by a line from the north bank of the Yukon River at Koyukuk, then northerly to the confluences of the Honhosa and Kateel Rivers, then northeasterly to the confluences of Billy Hawk Creek and the Huslia River (65° 57′ N. lat., 156° 41′ W. long.), then easterly to the south end of Solsmunket Lake, then east to Hughes, then south to Little Indian River, then southwesterly to the crest of Hochandochtla Mountain, then southwest to the mouth of Cottonwood Creek, then southwest to Bishop Rock, then westerly along the north bank of the Yukon River (including Koyukuk Island) to the point of beginning, is closed during moose-hunting seasons to the use of aircraft for hunting moose, including transportation of any moose hunter or moose part; however, this does not apply to transportation of a moose hunter or moose part by aircraft between publicly owned airports in the controlled use area or between a publicly owned airport within the area and points outside the area; all hunters on the Koyukuk River passing the ADF&G operated check station at Ella's Cabin (15 miles upstream from the Yukon on the Koyukuk River) are required to stop and report to ADF&G personnel at the check station;

(D) The Northwest Alaska Brown Bear Management Area, which consists of Unit 22, except 22(C), those portions of Unit 23, except the Baldwin Peninsula north of the Arctic Circle, Unit 24, and Unit 26(A), is open to brown bear hunting by State registration permit in lieu of a resident tag. No resident tag is required for taking brown bears in the Northwest Alaska Brown Bear Management Area, provided that the hunter has obtained a State registration permit prior to hunting. Aircraft may not be used in the Northwest Alaska Brown Bear Management Area in any manner for brown bear hunting under the authority of a brown bear State registration permit, including transportation of hunters, bears or parts of bears. However, this does not apply to transportation of bear hunters or bear parts by regularly scheduled flights to and between communities by carriers that normally provide scheduled service to this area, nor does it apply to transportation of aircraft to or between publicly owned airports.

(iii) Unit-specific regulations:

(A) Bait may be used to hunt black bear between April 15 and June 30;

(B) Arctic fox, incidentally taken with a trap or snare intended for red fox, may be used for subsistence purposes.

Harvest limits	Open season
Hunting	
Black Bear: 3 bears	July 1–June 30.
Brown Bear: Unit 24—1 bear by State registration permit	Sept. 1–May 31.
Caribou:.	
Unit 24—the Kanuti River drainage upstream from Kanuti, Chalatna Creek, the Fish Creek drainage (including Bonanza Creek)—1 bull.	Aug. 10–Sept. 30.
Remainder of Unit 24—5 caribou per day; however, cow caribou may not be taken May 16–June 30	July 1–June 30.
Sheep:	
Unit 24—(Anaktuvuk Pass residents only)—that portion within the Gates of the Arctic National Park—community harvest quota of 60 sheep, no more than 10 of which may be ewes and a daily possession limit of 3 sheep per person no more than 1 of which may be a ewe.	July 15–Dec. 31.
Unit 24—(excluding Anaktuvuk Pass residents)—that portion within the Gates of the Arctic National Park—3 sheep	Aug. 1–Apr. 30.
Unit 24—that portion within the Dalton Highway Corridor Management Area; except, Gates of the Arctic National Park—1 ram with 7/8 curl horn or larger by Federal registration permit only.	Aug. 10–Sept. 20.
Remainder of Unit 24—1 ram with 7/8 curl horn or larger	Aug. 10–Sept. 20.
Moose:	
Unit 24—that portion within the Koyukuk Controlled Use Area—1 moose; however, upstream from Huslia antlerless moose may only be taken during the periods of Sept. 21–Sept. 25, Dec. 1–Dec. 10, and Mar. 1–Mar. 10.	Sept. 1–Sept. 25. Dec. 1–Dec. 10. Mar. 1–Mar. 10.
Unit 24—that portion that includes the John River drainage within the Gates of the Arctic National Park—1 moose	Aug. 1–Dec. 31.
Unit 24—the Alatna River drainage within the Gates of the Arctic National Park—1 moose; however, antlerless moose may be taken only from Sept. 21–Sept. 25 and Mar. 1–Mar. 10.	Aug. 25–Dec. 31. Mar. 1–Mar. 10.
Unit 24—all drainages to the north of the Koyukuk River upstream from and including the Alatna River to and including the North Fork of the Koyukuk River, except those portions of the John River and the Alatna River drainages within the Gates of the Arctic National Park—1 moose; however, antlerless moose may be taken only from Sept. 21–Sept. 25 and Mar. 1–Mar. 10.	Aug. 25–Sept. 25. Mar. 1–Mar. 10.
Unit 24—that portion within the Dalton Highway Corridor Management Area; except, Gates of the Arctic National Park—1 antlered bull by Federal registration permit only.	Aug. 25–Sept. 25.
Remainder of Unit 24—1 antlered bull. Public lands in the Kanuti Controlled Use Area are closed to taking of moose, except by eligible rural Alaska residents.	Aug. 25–Sept. 25.
Coyote: 2 coyotes.	Sept. 1–Apr. 30.
Fox, Red (including Cross, Black and Silver Phases): 10 foxes; however, no more than 2 foxes may be taken prior to Oct. 1.	Sept. 1–Mar. 15.
Hare (Snowshoe and Tundra): No limit	July 1–June 30.
Lynx: 2 lynx	Nov. 1–Feb. 28.
Wolf: 5 wolves	Aug. 10–Apr. 30.
Wolverine: 1 wolverine	Sept. 1–Mar. 31.
Grouse (Spruce, Blue, Ruffed, and Sharp-tailed): 15 per day, 30 in possession	Aug. 10–Apr. 30.
Ptarmigan (Rock, Willow, and White-tailed): 20 per day, 40 in possession	Aug. 10–Apr. 30.
Trapping	
Beaver: No limit	Nov. 1–Apr. 15.
Coyote: No limit	Nov. 1–Mar. 31.
Fox, Red (including Cross, Black and Silver Phases): No limit	Nov. 1–Feb. 28.
Lynx: No limit	Nov. 1–Feb. 28.
Marten: No limit	Nov. 1–Feb. 28.
Mink and Weasel: No limit	Nov. 1–Feb. 28.
Muskrat: No limit	Nov. 1–June 10.
Otter: No limit	Nov. 1–Apr. 15.
Wolf: No limit	Nov. 1–Apr. 30.
Wolverine: No limit	Nov. 1–Mar. 31.

(25) *Unit 25.* (i) Unit 25 consists of the Yukon River drainage upstream from but not including the Hamlin Creek drainage, and excluding drainages into the south bank of the Yukon River upstream from the Charley River:

(A) Unit 25(A) consists of the Hodzana River drainage upstream from the Narrows, the Chandalar River drainage upstream from and including the East Fork drainage, the Christian River drainage upstream from Christian, the Sheenjek River drainage upstream from and including the Thluichohnjik Creek, the Coleen River drainage, and the Old Crow River drainage;

(B) Unit 25(B) consists of the Little Black River drainage upstream from but not including the Big Creek drainage, the Black River drainage upstream from and including the Salmon Fork drainage, the Porcupine River drainage upstream from the confluence of the Coleen and Porcupine Rivers, and drainages into the north bank of the Yukon River upstream from Circle, including the islands in the Yukon River;

(C) Unit 25(C) consists of drainages into the south bank of the Yukon River upstream from Circle to the Subunit 20(E) boundary, the Birch Creek drainage upstream from the Steese Highway bridge (milepost 147), the Preacher Creek drainage upstream from and including the Rock Creek drainage, and the Beaver Creek drainage upstream from and including the Moose Creek drainage;

(D) Unit 25(D) consists of the remainder of Unit 25.

(ii) In the following areas, the taking of wildlife for subsistence uses is prohibited or restricted on public land:

(A) The Dalton Highway Corridor Management Area, which consists of those portions of Units 20, 24, 25, and 26 extending five miles from each side

of the Dalton Highway from the Yukon River to milepost 300 of the Dalton Highway, is closed to the use of motorized vehicles, except aircraft and boats, and to licensed highway vehicles, snowmobiles, and firearms except as follows: The use of snowmobiles is authorized only for the subsistence taking of wildlife by residents living within the Dalton Highway Corridor Management Area. The use of licensed highway vehicles is limited only to designated roads within the Dalton Highway Corridor Management Area. The use of firearms within the Corridor is authorized only for the residents of Alatna, Allakaket, Anaktuvuk Pass, Bettles, Evansville, Stevens Village, and residents living within the Corridor;

(B) The Arctic Village Sheep Management Area; that portion of Unit 25(A) north and west of Arctic Village, which is bounded on the east by the East Fork Chandalar River beginning at the confluence of Red Sheep Creek and proceeding southwesterly downstream past Arctic Village to the confluence with Crow Nest Creek, continuing up Crow Nest Creek, through Portage Lake, to its confluence with the Junjik River; then down the Junjik River past Timber Lake and a larger tributary, to a major, unnamed tributary, northwesterly, for approximately 6 miles where the stream forks into two roughly equal drainages; the boundary follows the easternmost fork, proceeding almost due north to the headwaters and intersects the Continental Divide; the boundary then follows the Continental Divide easterly, through Carter Pass, then easterly and northeasterly approximately 62 miles along the divide to the head waters of the most northerly tributary of Red Sheep Creek then follows southerly along the divide designating the eastern extreme of the Red Sheep Creek drainage then to the confluence of Red Sheep Creek and the East Fork Chandalar River.

(iii) Unit-specific regulations:

(A) Bait may be used to hunt black bear between April 15 and June 30;

(B) Caribou and moose may be taken from a boat under power in Unit 25.

Harvest limits	Open season
Hunting	
Black Bear: 3 bears	July 1–June 30.
Caribou:	
Unit 25(A), (B), and the remainder of Unit 25(D)—10 caribou; however, no more than 5 caribou may be transported from these units per regulatory year.	July 1–Apr. 30.
Unit 25(C)—that portion south and east of the Steese Highway—1 bull by Federal registration permit only; the season will close when a harvest quota for the Fortymile herd has been reached. The harvest quota will be determined by the Board after consultation with ADF&G and announced before the season opening.	Aug. 10–Sept. 30. Nov. 15–Feb. 28.
25(C)—that portion north and west of the Steese Highway—1 caribou; however, only bull caribou may be taken during the Aug. 10–Sept. 20 season. During the winter season, caribou may be taken only with a Federal registration permit.	Aug. 10–Sept. 20. Feb. 15–Mar. 28.
Unit 25 (D)—that portion of Unit 25(D) drained by the west fork of the Dall River west of 150° W. long.—1 bull	Aug. 10–Sept. 30. Dec. 1–Dec. 31.
Sheep:	
Unit 25(A)—that portion within the Dalton Highway Corridor Management Area.	No open season.
Units 25(A)—Arctic Village Sheep Management Area—2 rams by Federal registration permit only. Public lands are closed to the taking of sheep except by rural Alaska residents of Arctic Village, Venetie, Fort Yukon, Kaktovik and Chalkytsik during seasons identified above.	Aug. 10–Apr. 30.
Remainder of Unit 25(A)—3 sheep by Federal registration permit only	Aug. 10–Apr. 30.
Moose:	
Unit 25(A)—1 antlered bull	Aug. 25–Sept. 25. Dec. 1–Dec. 10.
Unit 25(B)—that portion within Yukon Charley National Preserve—1 bull	Aug. 20–Sept. 30.
Unit 25(B)—that portion within the Porcupine River drainage upstream from, but excluding the Coleen River drainage—1 antlered bull.	Aug. 25–Sept. 30. Dec. 1–Dec. 10.
Unit 25(B)—that portion, other than Yukon Charley National Preserve, draining into the north bank of the Yukon River upstream from and including the Kandik River drainage, including the islands in the Yukon River—1 antlered bull.	Sept. 5–Sept. 30. Dec. 1–Dec. 15.
Remainder of Unit 25(B)—1 antlered bull	Aug. 25–Sept. 25. Dec. 1–Dec. 15.
Unit 25(C)—1 antlered bull	Sept. 1–Sept. 15.
Unit 25(D)(West)—that portion lying west of a line extending from the Unit 25(D) boundary on Preacher Creek, then downstream along Preacher Creek, Birch Creek and Lower Mouth Birch Creek to the Yukon River, then downstream along the north bank of the Yukon River (including islands) to the confluence of the Hadweenzik River, then upstream along the west bank of the Hadweenzik River to the confluence of Forty and One-Half Mile Creek, then upstream along Forty and One-Half Mile Creek to Nelson Mountain on the Unit 25(D) boundary—1 bull by a Federal registration permit. Alternate permits allowing for designated hunters are available to qualified applicants who reside in Beaver, Birch Creek, or Stevens Village. Moose hunting on public land in this portion of Unit 25(D)(West) is closed at all times except for residents of Beaver, Birch Creek and Stevens Village during seasons identified above. The moose season will be closed when 30 moose have been harvested in the entirety of Unit 25(D)(West).	Aug. 25–Feb. 28.
Remainder of Unit 25(D)—1 antlered moose	Aug. 25–Sept. 25. Dec. 1–Dec. 20.
Beaver:	
Unit 25, excluding Unit 25(C)—1 beaver per day; 1 in possession	Apr. 16–Oct. 31.
Unit 25(C)	No open season.
Coyote: 2 coyotes	Sept. 1–Apr. 30.
Fox, Red (including Cross, Black and Silver Phases): 10 foxes; however, no more than 2 foxes may be taken prior to Oct. 1.	Sept. 1–Mar. 15.
Hare (Snowshoe and Tundra): No limit	July 1–June 30.
Lynx:	

Harvest limits	Open season
Unit 25(C)—2 lynx	Dec. 1–Jan. 31.
Remainder of Unit 25—2 lynx	Nov. 1–Feb. 28.
Wolf:	
Unit 25(A)—No limit	Aug. 10–Apr. 30.
Remainder of Unit 25—10 wolves	Aug. 10–Apr. 30.
Wolverine: 1 wolverine	Sept. 1–Mar. 31.
Grouse (Spruce, Blue, Ruffed, and Sharp-tailed):	
Unit 25(C)—15 per day, 30 in possession	Aug. 10–Mar. 31.
Remainder of Unit 25—15 per day, 30 in possession	Aug. 10–Apr. 30.
Ptarmigan (Rock, Willow, and White-tailed):	
Unit 25(C)—those portions within 5 miles of Route 6 (Steese Highway)—20 per day, 40 in possession	Aug. 10–Mar. 31.
Remainder of Unit 25—20 per day, 40 in possession	Aug. 10–Apr. 30.
Trapping	
Beaver:	
Unit 25(C)—25 beaver	Nov. 1–Apr. 15.
Remainder of Unit 25—50 beaver	Nov. 1–Apr. 15.
Coyote: No limit	Nov. 1–Mar. 31.
Fox, Red (including Cross, Black and Silver Phases): No limit	Nov. 1–Feb. 28.
Lynx: No limit	Nov. 1–Feb. 28.
Marten: No limit	Nov. 1–Feb. 28.
Mink and Weasel: No limit	Nov. 1–Feb. 28.
Muskrat: No limit	Nov. 1–June 10.
Otter: No limit	Nov. 1–Apr. 15.
Wolf: No limit	Nov. 1–Mar. 31.
Wolverine:	
Unit 25(C)—No limit	Nov. 1–Feb. 28.
Remainder of Unit 25—No limit	Nov. 1–Mar. 31.

(26) *Unit 26.* (i) Unit 26 consists of Arctic Ocean drainages between Cape Lisburne and the Alaska-Canada border including the Firth River drainage within Alaska:

(A) Unit 26(A) consists of that portion of Unit 26 lying west of the Itkillik River drainage and west of the east bank of the Colville River between the mouth of the Itkillik River and the Arctic Ocean;

(B) Unit 26(B) consists of that portion of Unit 26 east of Unit 26(A), west of the west bank of the Canning River and west of the west bank of the Marsh Fork of the Canning River;

(C) Unit 26(C) consists of the remainder of Unit 26.

(ii) In the following areas, the taking of wildlife for subsistence uses is prohibited or restricted on public land:

(A) The Unit 26(A) Controlled Use Area, which consists of Unit 26(A), is closed to the use of aircraft in any manner for moose hunting, including transportation of moose hunters or parts of moose from Aug. 1—Aug. 31 and from Jan. 1—Mar. 31. No hunter may take or transport a moose, or part of a moose in Unit 26(A) after having been transported by aircraft into the unit. However, this does not apply to transportation of moose hunters or moose parts by regularly scheduled flights to and between villages by carriers that normally provide scheduled service to this area, nor does it apply to transportation by aircraft to or between publicly owned airports;

(B) The Dalton Highway Corridor Management Area, which consists of those portions of Units 20, 24, 25, and 26 extending five miles from each side of the Dalton Highway from the Yukon River to milepost 300 of the Dalton Highway, is closed to the use of motorized vehicles, except aircraft and boats, and to licensed highway vehicles, snowmobiles, and firearms except as follows: The use of snowmobiles is authorized only for the subsistence taking of wildlife by residents living within the Dalton Highway Corridor Management Area. The use of licensed highway vehicles is limited only to designated roads within the Dalton Highway Corridor Management Area. The use of firearms within the Corridor is authorized only for the residents of Alatna, Allakaket, Anaktuvuk Pass, Bettles, Evansville, Stevens Village, and residents living within the Corridor;

(C) The Northwest Alaska Brown Bear Management Area, which consists of Unit 22, except 22(C), those portions of Unit 23, except the Baldwin Peninsula north of the Arctic Circle, Unit 24, and Unit 26(A), is open to brown bear hunting by State registration permit in lieu of a resident tag. No resident tag is required for taking brown bears in the Northwest Alaska Brown Bear Management Area, provided that the hunter has obtained a State registration permit prior to hunting. Aircraft may not be used in the Northwest Alaska Brown Bear Management Area in any manner for brown bear hunting under the authority of a brown bear State registration permit, including transportation of hunters, bears or parts of bears. However, this does not apply to transportation of bear hunters or bear parts by regularly scheduled flights to and between communities by carriers that normally provide scheduled service to this area, nor does it apply to transportation of aircraft to or between publicly owned airports.

(iii) Unit-specific regulations:

(A) Caribou may be taken from a boat under power in Unit 26;

(B) Swimming caribou may be taken with a firearm using rimfire cartridges;

(C) In Kaktovik, a Federally-qualified subsistence user (recipient) may designate another Federally-qualified subsistence user to take sheep on his or her behalf unless the recipient is a member of a community operating under a community harvest system. The designated hunter must obtain a designated hunter permit and must return a completed harvest report. The designated hunter may hunt for any number of recipients but may have no more than two harvest limits in his/her possession at any one time.

Harvest limits	Open season
Hunting	
Black Bear: 3 bears	July 1–June 30.
Brown Bear:	
Unit 26(A)—1 bear by State registration permit	Sept. 1–May 31.
Unit 26 (B) and (C)—1 bear	Sept. 1–May 31.
Caribou:	
Unit 26(A)—10 caribou per day; however, cow caribou may not be taken May 16–June 30. Federal lands south of the Colville River and east of the the Killik River are closed to the the taking of caribou by non-Federally qualified subsistence users from Aug. 1–Sept. 30.	July 1–June 30.
Unit 26(B)—10 caribou per day; however, cow caribou may be taken only from Oct. 1–Apr. 30	July 1–June 30.
Unit 26(C)—10 caribou per day	July 1–Apr. 30.
Not more than 5 caribou per regulatory year may be transported from Unit 26 except to the community of Anaktuvuk Pass.	
Sheep:	
Unit 26(A) and (B)—(Anaktuvuk Pass residents only)—that portion within the Gates of the Arctic National Park—community harvest quota of 60 sheep, no more than 10 of which may be ewes and a daily possession limit of 3 sheep per person no more than 1 of which may be a ewe.	July 15–Dec. 31.
Unit 26(A)—(excluding Anaktuvuk Pass residents)—those portions within the Gates of the Arctic National Park—3 sheep.	Aug. 1–Apr. 30.
Unit 26(A)—that portion west of Howard Pass and the Etivluk River	No open season.
Unit 26(B)—that portion within the Dalton Highway Corridor Management Area—1 ram with 7/8 curl horn or larger by Federal registration permit only.	Aug. 10–Sept. 20.
Remainder of Unit 26(A) and (B)—including the Gates of the Arctic National Preserve—1 ram with 7/8 curl horn or larger.	Aug. 10–Sept. 20.
Unit 26(C)—3 sheep per regulatory year; the Aug. 10–Sept. 20 season is restricted to 1 ram with 7/8 curl horn or larger. A Federal registration permit is required for the Oct. 1–Apr. 30 season.	Aug. 10–Sept. 20. Oct. 1–Apr. 30.
Moose:	
Unit 26(A)—that portion of the Colville River drainage downstream from the mouth of the Anaktuvuk River—1 bull. Federal public lands are closed to the taking of moose by non-Federally qualified subsistence users.	Aug. 1—31.
Remainder of Unit 26	No open season.
Muskox: Unit 26(C)—1 muskox by Federal registration permit only; 12 permits for bulls and 3 permits for cows may be issued to rural Alaska residents of the village of Kaktovik only. Public lands are closed to the taking of muskox, except by rural Alaska residents of the village of Kaktovik during open seasons.	Sept. 15–Mar. 31.
Coyote: 2 coyotes	Sept. 1–Apr. 30.
Fox, Arctic (Blue and White Phase): 2 foxes	Sept. 1–Apr. 30.
Fox, Red (including Cross, Black and Silver Phases):	
Unit 26(A) and (B)—10 foxes; however, no more than 2 foxes may be taken prior to Oct. 1	Sept. 1–Mar. 15.
Unit 26(C)—10 foxes	Nov. 1–Apr. 15.
Hare (Snowshoe and Tundra): No limit	July 1–June 30.
Lynx: 2 lynx	Nov. 1–Apr. 15.
Wolf: 15 wolves	Aug. 10–Apr. 30.
Wolverine: 5 wolverine	Sept. 1–Mar. 31.
Grouse (Spruce, Blue, Ruffed, and Sharp-tailed): 15 per day, 30 in possession	Aug. 10–Apr. 30.
Ptarmigan (Rock, Willow, and White-tailed): 20 per day, 40 in possession	Aug. 10–Apr. 30.
Trapping	
Coyote: No limit	Nov. 1–Apr. 15.
Fox, Arctic (Blue and White Phase): No limit	Nov. 1–Apr. 15.
Fox, Red (including Cross, Black and Silver Phases): No limit	Nov. 1–Apr. 15.
Lynx: No limit	Nov. 1—Apr. 15.
Marten: No limit	Nov. 1–Apr. 15.
Mink and Weasel: No limit	Nov. 1–Jan. 31.
Muskrat: No limit	Nov. 1–June 10.
Otter: No limit	Nov. 1–Apr. 15.
Wolf: No limit	Nov. 1–Apr. 30.
Wolverine: No limit	Nov. 1–Apr. 15.

4. In Subpart D of 36 CFR part 242 and 50 CFR part 100, §§ ____.26 and ____.27 are added effective January 1, 1999, through December 31, 1999, to read as follows:

§ ____.26 Subsistence taking of fish.

(a) *Applicability.* (1) Regulations in this section apply to the taking of finfish, excluding halibut, or their parts for subsistence uses.

(2) Finfish, excluding halibut, may be taken for subsistence uses at any time by any method unless restricted by the subsistence fishing regulations found in this section.

(b) *Definitions.* The following definitions shall apply to all regulations contained in this section and § ____.27:

Abalone Iron means a flat device which is used for taking abalone and which is more than one inch (24 mm) in width and less than 24 inches (610 mm) in length, with all prying edges rounded and smooth.

ADF&G means the Alaska Department of Fish and Game.

Anchor means a device used to hold a salmon fishing vessel or net in a fixed position relative to the beach; this includes using part of the seine or lead, a ship's anchor, or being secured to another vessel or net that is anchored.

Bag Limit means the maximum legal take per person or designated group, per

specified time period, even if part or all of the fish are preserved.

Beach seine means a floating net which is designed to surround fish and is set from and hauled to the beach.

Char means the following species: Arctic char (*Salvelinus alpinis*); lake trout (*Salvelinus namaycush*); and Dolly Varden (*Salvelinus malma*).

Crab means the following species: red king crab (*Paralithodes camshatica*); blue king crab (*Paralithodes platypus*); brown king crab (*Lithodes aequispina*); *Lithodes couesi;* all species of tanner or snow crab (*Chionoecetes* spp.); and Dungeness crab (*Cancer magister*).

Dip net means a bag-shaped net supported on all sides by a rigid frame; the maximum straight-line distance between any two points on the net frame, as measured through the net opening, may not exceed five feet; the depth of the bag must be at least one-half of the greatest straight-line distance, as measured through the net opening; no portion of the bag may be constructed of webbing that exceeds a stretched measurement of 4.5 inches; the frame must be attached to a single rigid handle and be operated by hand.

Diving Gear means any type of hard hat or skin diving equipment, including SCUBA equipment.

Drainage means all of the waters comprising a watershed including tributary rivers, streams, sloughs, ponds and lakes which contribute to the supply of the watershed.

Drift gill net means a drifting gill net that has not been intentionally staked, anchored or otherwise fixed.

Federal lands means lands and waters and interests therein the title to which is in the United States.

Fishwheel means a fixed, rotating device for catching fish which is driven by river current or other means of power.

Freshwater of streams and rivers means the line at which freshwater is separated from saltwater at the mouth of streams and rivers by a line drawn between the seaward extremities of the exposed tideland banks at the present stage of the tide.

Fyke net means a fixed, funneling (fyke) device used to entrap fish.

Gear means any type of fishing apparatus.

Gill net means a net primarily designed to catch fish by entanglement in a mesh that consists of a single sheet of webbing which hangs between cork line and lead line, and which is fished from the surface of the water.

Grappling hook means a hooked device with flukes or claws, which is attached to a line and operated by hand.

Groundfish—bottomfish means any marine finfish except halibut, osmerids, herring and salmonids.

Hand purse seine means a floating net which is designed to surround fish and which can be closed at the bottom by pursing the lead line; pursing may only be done by hand power, and a free-running line through one or more rings attached to the lead line is not allowed.

Herring pound means an enclosure used primarily to contain live herring over extended periods of time.

Hung measure means the maximum length of the cork line when measured wet or dry with traction applied at one end only.

Jigging gear means a line or lines with lures or baited hooks, drawn through the water by hand, and which are operated during periods of ice cover from holes cut in the ice.

Lead means either a length of net employed for guiding fish into a seine, set gill net, or other length of net, or a length of fencing employed for guiding fish into a fishwheel, fyke net or dip net.

Long line means either a stationary, buoyed, or anchored line, or a floating, free-drifting line with lures or baited hooks attached.

Possession limit means the maximum number of fish a person or designated group may have in possession if the fish have not been canned, salted, frozen, smoked, dried, or otherwise preserved so as to be fit for human consumption after a 15 day period.

Pot means a portable structure designed and constructed to capture and retain live fish and shellfish in the water.

Public lands or *public land* means lands situated in the State of Alaska which are Federal lands, except—

(1) Land selections of the State of Alaska which have been tentatively approved or validly selected under the Alaska Statehood Act and lands which have been confirmed to, validly selected by, or granted to the Territory of Alaska or the State under any other provision of Federal law;

(2) Land selections of a Native Corporation made under the Alaska Native Claims Settlement Act which have not been conveyed to a Native Corporation, unless any such selection is determined to be invalid or is relinquished; and

(3) Lands referred to in Section 19(b) of the Alaska Native Claims Settlement Act.

Purse seine means a floating net which is designed to surround fish and which can be closed at the bottom by means of a free-running line through one or more rings attached to the lead line.

Ring net means a bag-shaped net suspended between no more than two frames; the bottom frame may not be larger in perimeter than the top frame; the gear must be nonrigid and collapsible so that free movement of fish or shellfish across the top of the net is not prohibited when the net is employed.

Rockfish means all species of the genus *Sebastes.*

Rod and reel means either a device upon which a line is stored on a fixed or revolving spool and is deployed through guides mounted on a flexible pole, or a line that is attached to a pole.

Salmon means the following species: pink salmon (*Oncorhynchus gorbusha*); sockeye salmon (*Oncorhynchus nerka*); chinook salmon (*Oncorhynchus tshawytscha*); coho salmon (*Oncorhynchus kisutch*); and chum salmon (*Oncorhynchus keta*).

Salmon stream means any stream used by salmon for spawning or for travelling to a spawning area.

Salmon stream terminus means a line drawn between the seaward extremities of the exposed tideland banks of any salmon stream at mean lower low water.

Set gill net means a gill net that has been intentionally set, staked, anchored, or otherwise fixed.

Shovel means a hand-operated implement for digging clams or cockles.

Spear means a shaft with a sharp point or fork-like implement attached to one end which is used to thrust through the water to impale or retrieve fish and which is operated by hand.

Take or *Taking* means to pursue, hunt, shoot, trap, net capture, collect, kill, harm, or attempt to engage in any such conduct.

To operate fishing gear means any of the following: the deployment of gear in the waters of Alaska; the removal of gear from the waters of Alaska; the removal of fish or shellfish from the gear during an open season or period; or the possession of a gill net containing fish during an open fishing period, except that a gill net which is completely clear of the water is not considered to be operating for the purposes of minimum distance requirement.

Trawl means a bag-shaped net towed through the water to capture fish or shellfish.

Trout means the following species: cutthroat trout (*Oncorhynchus clarki*) and rainbow trout or steelhead trout (*Oncorhynchus mykiss*).

(c) *Methods, means, and general restrictions.* (1) No person may buy or sell fish, their parts, or their eggs which have been taken for subsistence uses, unless, prior to the sale, the prospective buyer or seller obtains a determination

from the Federal Subsistence Board that the sale constitutes customary trade.

(2) No person may take fish for subsistence uses within 300 feet of any dam, fish ladder, weir, culvert or other artificial obstruction.

(3) No person may use explosives or chemicals to take fish for subsistence uses.

(4) Each person shall plainly and legibly inscribe his or her first initial, last name, and address on any fish wheel, keg, buoy, stakes attached to gill nets, and on any other unattended fishing gear which the person has employed to take fish for subsistence uses.

(5) All pots used to take fish must contain an opening on the webbing of a sidewall of the pot which has been laced, sewn, or secured together by untreated cotton twine or other natural fiber no larger than 120 thread which upon deterioration or parting of the twine produces an opening in the web with a perimeter equal to or exceeding one-half of the tunnel eye opening perimeter.

(6) Persons licensed by the State of Alaska to engage in a fisheries business may not receive for commercial purposes or barter or solicit to barter for subsistence taken salmon or their parts.

(7) Except as provided elsewhere in this subpart, the taking of rainbow trout and steelhead trout is prohibited.

(8) Fish taken for subsistence use or under subsistence regulations may not be subsequently used as bait for commercial or sport fishing purposes.

(9) The use of live non-indigenous fish as bait is prohibited.

(10) Any fishing gear used to take fish for subsistence uses may not obstruct more than one-half the width of any stream. A stationary fishing device may obstruct not more than one-half the width of any stream.

(11) Kegs or buoys attached to any permitted gear may be any color but red.

(12) Harvest limits authorized in this section or § ____.27 may not be accumulated with bag limits authorized in State seasons.

(13) Unless specified otherwise in this section, use of a rod and reel to take fish is permitted without a subsistence fishing permit. Harvest limits applicable to the use of a rod and reel to take fish for subsistence uses shall be as follows:

(i) Where a subsistence fishing permit issued by the ADF&G is required by this section, that permit is not required to take fish for subsistence uses with rod and reel. The harvest and possessions limits for taking fish for subsistence uses with a rod and reel in those areas are the same as indicated on the ADF&G permit issued for subsistence fishing with other gear types;

(ii) Where a subsistence fishing permit is not required by this section, the harvest and possession limits for taking fish for subsistence uses with a rod and reel is the same as for taking fish under State of Alaska sport fishing regulations in those same areas.

(14) Unless restricted in this section, or unless restricted under the terms of a required subsistence fishing permit, gear specified in definitions in paragraph (b) of this section are legal types of gear for subsistence fishing.

(15) Unless restricted in this section, or unless restricted under the terms of a subsistence fishing permit, fish may be taken at any time.

(16) Gill nets used for subsistence fishing for salmon may not exceed 50 fathoms in length, unless otherwise specified by regulations for particular areas set forth in this section.

(17) Each fishwheel must have the first initial, last name, and address of the operator plainly and legibly inscribed on the side of the fishwheel facing midstream of the river.

(18) Unlawful possession of subsistence finfish. Fish or their parts taken in violation of Federal or State regulations may not be possessed, transported, given, received or bartered.

(d) *Fishery management area restrictions.* For detailed descriptions of Fishery Management Areas, see State of Alaska Fishing Regulations.

(1) *Kotzebue-Northern Area.* (i) Salmon may be taken only by gill nets, beach seines, or a rod and reel.

(ii) Fish may be taken for subsistence purposes without a subsistence fishing permit.

(2) *Norton Sound-Port Clarence Area.* (i) Salmon may be taken only by gill nets, beach seines, fishwheel, or a rod and reel.

(ii) Except as provided in this paragraph (d)(2), fish may be taken for subsistence purposes without a subsistence fishing permit. A subsistence fishing permit issued by ADF&G is required, except for use of rod and reel, as follows:

(A) Pilgrim River drainage including Salmon Lake;

(B) For net fishing in all waters from Cape Douglas to Rocky Point.

(iii) Only one subsistence fishing permit will be issued to each household per year.

(3) *Yukon Area.* (i) Salmon may be taken only by set gill nets, beach seines, fishwheels, or rod and reel.

(ii) Except as provided in this paragraph (d)(3), fish may be taken for subsistence purposes without a subsistence fishing permit.

(iii) A subsistence fishing permit issued by the ADF&G is required, except for the use of rod and reel, as follows:

(A) For the Yukon River drainage from the mouth of Hess Creek to the mouth of the Dall River;

(B) For the Yukon River drainage from the ADF&G regulatory markers placed near the upstream mouth of 22 Mile Slough upstream to the United States—Canada border;

(C) For the Tanana River drainage above the mouth of the Wood River;

(D) For whitefish and suckers in the waters listed;

(E) For the taking of pike in waters of the Tolovana River drainage upstream of its confluence with the Tanana River;

(F) For the taking of salmon in Subdistricts 6–A and 6–B.

(iv) Except as otherwise provided, and except as may be provided by the terms of a subsistence fishing permit issued by the ADF&G, there is no closed season on fish other than salmon.

(v) Only one subsistence fishing permit will be issued to each household per year.

(vi) Birch Creek of the upper Yukon drainage, and waters within 500 feet of its mouth, is closed to subsistence fishing June 10 through September 10, except that whitefish and suckers may be taken by rod and reel or under the authority of a subsistence fishing permit issued by the ADF&G.

(vii) The following drainages located north of the main Yukon River are closed to subsistence fishing:

(A) Kanuti River, upstream from a point five miles downstream of the State highway crossing;

(B) Fish Creek, upstream from the mouth of Bonanza Creek;

(C) Bonanza Creek;

(D) Jim River, including Prospect Creek and Douglas Creek;

(E) South Fork of the Koyukuk River system upstream from the mouth of Jim River;

(F) Middle Fork of the Koyukuk River system upstream from the mouth of the North Fork;

(G) North Fork of the Chandalar River system upstream from the mouth of Quartz Creek.

(viii) The main Tanana River and its adjoining sloughs are closed to subsistence fishing between the mouth of the Salcha River and the mouth of the Gerstle River, except that salmon may be taken in the area upstream of the Richardson Highway bridge to the mouth of Clearwater Creek after November 20.

(ix) Waters of the Tanana River drainage are closed to the subsistence taking of pike between the mouth of the Kantishna River and Delta River at

Black Rapids on the Richardson Highway and Cathedral Rapids on the Alaska Highway, except that pike may be taken for subsistence purposes in the Tolovana River drainage upstream from its confluence with the Tanana River.

(x) The Delta River is closed to subsistence fishing, except that salmon may be taken after November 20.

(xi) The following locations are closed to subsistence fishing:

(A) The following rivers and creeks and within 500 feet of their mouths: Delta Clearwater River (Clearwater Creek at 64° 06′ N. lat., 145° 34′ W. long), Richardson Clearwater Creek (Clear Creek at 64° 14′ N. lat., 146° 16′ W. long), Goodpaster River, Chena River, Little Chena River, Little Salcha River, Blue Creek, Big Salt River, Shaw Creek, Bear Creek, McDonald Creek, Moose Creek, Hess Creek, and Beaver Creek;

(B) Ray River and Salcha River upstream of a line between the ADF&G regulatory markers located at the mouth of the rivers;

(C) Deadman, Jan, Boleo, Birch, Lost, Harding, Craig, Fielding, Two-Mile, Quartz, and Little Harding lakes;

(D) Piledriver and Badger (Chena) sloughs.

(xii) The following waters are closed to the taking of chum salmon from August 15–December 31:

(A) Toklat River;

(B) Kantishna River from the mouth of the Toklat River to its confluence with the Tanana River.

(xiii) Salmon may be taken only by set gill nets in those locations described in below after July 19:

(A) Waters of the Black River including waters within one nautical mile of its terminus;

(B) Waters of Kwikluak Pass downstream of Agmulegut and the waters of Kwemeluk Pass;

(C) Waters of Alakanuk Pass downstream from the mouth of Kuiukpak Slough;

(D) Waters of Kwiguk Pass downstream to the mouth of Kawokhawik Slough;

(E) Waters of Kawanak Pass downstream from Sea Gull Point;

(F) Waters of Apoon Pass downstream from the mouth of the Kotlik River and waters of Okwega Pass downstream from its confluence with Apoon Pass;

(G) Waters within one nautical mile seaward from any grassland bank in District 1.

(xiv) Pike may not be taken with gill nets in the waters of the Tolovana River drainage from October 15–April 14.

(xv) A commercial salmon fisherman who is registered for Districts 1, 2, or 3 may not take salmon for subsistence purposes in any other district located downstream from Old Paradise Village.

(xvi) In District 4, commercial fishermen may not take salmon for subsistence purposes during the commercial salmon fishing season by gill nets larger than 6-inch mesh after a date specified by emergency order issued between July 10–July 31.

(xvii) In Subdistricts 5–A, 5–B, 5–C, and that portion of Subdistrict 5–D downstream from Long Point, no person may possess salmon taken for subsistence purposes during a commercial fishing period, unless the dorsal fin has been immediately removed from the salmon; a person may not sell or purchase salmon from which the dorsal fin has been removed.

(xviii) Subsistence fishermen taking salmon in Subdistrict 6–C shall report their salmon catches at designated ADF&G check stations by the end of each weekly fishing period; immediately after salmon have been taken, catches must be recorded on a harvest form provided by the ADF&G.

(xix) The annual possession limit for the holder of a Subdistrict 6–C subsistence salmon fishing permit is 10 king salmon and 75 chum salmon for periods through August 15, and 75 chum and coho salmon for periods after August 15.

(xx) Subsistence salmon harvest limits in Subdistrict 6–C are 750 king salmon and 5,000 chum salmon taken through August 15 and 5,200 chum and coho salmon combined taken after August 15; when either the king or chum salmon harvest limit for periods before August 16 has been taken, the subsistence salmon fishing season in Subdistrict 6–C will close; a later season will open after August 15 to allow the taking of the harvest limit for periods after August 15; if the chum salmon harvest limit has not been obtained through August 15, the remaining harvest will not be added to the chum salmon harvest level for periods after August 15.

(xxi) The annual harvest limit for the holder of a Subdistrict 6–A or 6–B subsistence salmon fishing permit is 60 chinook salmon and 500 chum salmon for the period through August 15 of a year, and 2,000 chum and coho salmon combined for the period after August 15; upon request, permits for additional salmon may be issued by the ADF&G.

(xxii) In the Kantishna River drainage, the open subsistence salmon fishing periods are seven days per week.

(4) *Kuskokwim Area.* (i) Salmon may only be taken by gill net, beach seine, fishwheel, or by a rod and reel, subject to the restrictions set forth in this paragraph (d)(4), except that salmon may also be taken by spear in the Holitna River drainage.

(ii) Fish may be taken for subsistence purposes without a subsistence fishing permit.

(iii) Each subsistence gill net operated in tributaries of the Kuskokwim River must be attached to the bank, fished substantially perpendicular to the bank and in a substantially straight line.

(iv) The aggregate length of set gill nets or drift gill nets in use by any individual for taking salmon may not exceed 50 fathoms.

(v) Rainbow trout may be taken by residents of Goodnews Bay, Platinum, Quinhagak, Eek, Kwethluk, Akiachak, and Akiak from those non-navigable drainages tributary to the Kuskokwim River downstream from the confluence of the Kuskokwim and Holitna Rivers and from those non-navigable drainages to Kuskokwim Bay north of the community of Platinum, subject to the following restrictions:

(A) Rainbow trout may be taken only by the use of gill nets, rod and reel, or jigging through the ice;

(B) The use of gill nets for taking rainbow trout is prohibited from March 15–June 15.

(5) *Bristol Bay Area.* (i) Salmon and char may only be taken by rod and reel or under authority of a subsistence fishing permit issued by the ADF&G.

(ii) Only one subsistence fishing permit may be issued to each household per year.

(iii) Each gill net must be staked and buoyed.

(iv) No person may operate or assist in operating subsistence salmon net gear while simultaneously operating or assisting in operating commercial salmon net gear.

(v) Salmon, herring, and capelin may only be taken by set gill nets and by a rod and reel, except that salmon may also be taken by spear in the Togiak River including its tributaries.

(vi) Subsistence fishing is not permitted within the boundaries of Katmai National Park.

(vii) Except for the western shore of the Newhalen River, waters used by salmon are closed to the subsistence taking of fish within 300 feet of a stream mouth.

(viii) Subsistence salmon fishing permits for the Naknek River drainage will be issued only through the ADF&G King Salmon office.

(ix) Subsistence fishing with nets is prohibited in the following waters and within one-fourth mile of the terminus of those waters during the period from September 1 through June 14: Lower Talarik Creek, Roadhouse Creek, Nick G. Creek, Middle Talarik Creek, Alexi

Creek, Copper River, Upper Talarik Creek, Tazimina River, Kakhonak River, Pete Andrew Creek, Young's Creek, Gibralter River, Zacker Creek, Chekok Creek, Dennis Creek, Newhalen River, Tomokok Creek, Belinda Creek.

(x) Gill nets are prohibited in that portion of the Naknek River upstream from Sovonaski.

(xi) After August 20, no person may possess coho salmon for subsistence purposes in the Togiak River Section and the Togiak River drainage unless the head has been immediately removed from the salmon. It is unlawful to purchase or sell coho salmon from which the head has been removed.

(6) *Aleutian Islands Area.* (i) Salmon may be taken by seine and gill net, with gear specified on a subsistence fishing permit issued by the ADF&G, or by a rod and reel.

(ii) The Adak District is closed to the taking of salmon.

(iii) Salmon and char may be taken only by rod and reel or under the terms of a subsistence fishing permit issued by the ADF&G, except that a permit is not required in the Akutan, Umnak and Adak Districts; not more than 250 salmon may be taken for subsistence purposes unless otherwise specified on the subsistence fishing permit; a record of subsistence-caught fish must be kept on the reverse side of the permit; the record must be completed immediately upon taking subsistence-caught fish and must be returned to the local representative of the ADF&G no later than October 31.

(7) *Alaska Peninsula Area.* (i) Salmon may be taken by seine, gill net, gear specified on a permit issued by the ADF&G, or rod and reel.

(ii) The following waters are closed to subsistence fishing for salmon:

(A) Russell Creek and Nurse Lagoon;

(B) Trout Creek;

(C) Humbolt Creek.

(iii) Salmon and char may only be taken by rod and reel or under the authority of a subsistence fishing permit issued by the ADF&G; a record of subsistence-caught fish must be kept on the reverse side of the permit; the record must be completed immediately upon taking subsistence-caught fish and must be returned to the local representative of the ADF&G no later than October 31.

(8) *Chignik Area.* (i) Salmon may be taken by seines and gill nets, or with gear specified on a subsistence fishing permit issued by the ADF&G, or by a rod and reel, except that in Chignik Lake, salmon may not be taken with purse seines.

(ii) Salmon may not be taken in the Chignik River, upstream from the ADF&G weir site or counting tower, in Black Lake, or any tributary to Black and Chignik Lakes.

(iii) Salmon and char may only be taken by rod and reel or under the authority of a subsistence fishing permit issued by the ADF&G. A record of subsistence-caught fish must be kept on the reverse side of the permit. The record must be completed immediately upon taking subsistence-caught fish and must be returned to the local representative of the ADF&G no later than October 31.

(iv) From June 10–September 30, commercial fishing license holders may not subsistence fish for salmon.

(9) *Kodiak Area.* (i) Salmon may be taken 24 hours a day from January 1 through December 31 except as provided in this paragraph (d)(9)(i):

(A) From June 1–September 15, salmon seine vessels may not be used to take subsistence salmon for 24 hours before, during, and for 24 hours after any open commercial salmon fishing period;

(B) From June 1–September 15, purse seine vessels may be used to take salmon only with gill nets and no other type of salmon gear may be on board the vessel;

(C) Salmon may be taken only by gill net, seine, or by a rod and reel;

(D) Subsistence fishermen must be physically present at the net at all times the net is being fished.

(ii) The following locations are closed to the subsistence taking of salmon:

(A) All waters of Mill Bay and all those waters bounded by a line from Spruce Cape to the northernmost point of Woody Island, then to the northernmost point of Holiday Island, then to a point on Near Island opposite the Kodiak small boat harbor entrance and then to the small boat harbor entrance;

(B) All freshwater systems of Little Afognak River and Portage Creek drainage in Discoverer Bay;

(C) All water closed to commercial salmon fishing in the Barbara Cove, Chiniak Bay, Saltery Cove, Pasagshak Bay, Monashka Bay and Anton Larsen Bay, and all waters closed to commercial salmon fishing within 100 yards of the terminus of Selief Bay Creek and north and west of a line from the tip of Las Point to the tip of River Mouth Point of Afognak Bay;

(D) All waters 300 yards seaward of the terminus of Monks Creek;

(E) From August 15 through September 30, all waters 500 yards seaward of the terminus of Little Kitoi Creek;

(F) All freshwater systems of Afognak Island;

(G) All waters of Ouzinkie Harbor north of a line from 57°55′10″ N. lat., 152°36′ W. long. to 57°55′03″ N. lat., 152°29′20″ W. long.

(iii) A subsistence fishing permit issued by the ADF&G is required for taking salmon, trout and char for subsistence purposes (hourly restrictions and rod/reel restrictions identified in this permit do not apply on waters under Federal jurisdiction in the Kodiak Area); a subsistence fishing permit issued by the ADF&G is required for taking herring and bottomfish for subsistence purposes during the commercial herring sac roe season from May 1–June 30; all subsistence fishermen shall keep a record of the number of subsistence fish taken each year; the number of subsistence fish shall be recorded on the reverse side of the permit. The record must be completed immediately upon landing subsistence caught fish and must be returned to the local representative of the ADF&G by February 1 of the year following the year the permit was issued.

(10) *Cook Inlet Area.* (i) Salmon may be taken only by rod and reel, or under the authority of a subsistence fishing permit issued by the ADF&G; only one permit may be issued to a household each year; a subsistence fishing permit holder shall record daily salmon catches on forms provided by the ADF&G.

(ii) Trout, grayling, char, and burbot may not be taken in fresh water.

(iii) All public waters on the Kenai Peninsula are closed to subsistence fishing.

(iv) Smelt may be taken only with gill nets and dip nets. Gill nets used to take smelt may not exceed 50 feet in length and two inches in mesh size.

(v) Gill nets may not be used.

(11) *Prince William Sound Area.* (i) Salmon and freshwater fish species may be taken only by rod and reel or under the authority of a subsistence fishing permit issued by the ADF&G.

(ii) Only one subsistence fishing permit will be issued to each household per year.

(iii) Use of fishwheels:

(A) Fishwheels used for subsistence fishing may not be rented, leased, or otherwise used for personal gain;

(B) Subsistence fishwheels must be removed from the water at the end of the permit period;

(C) Each permittee may operate only one fishwheel at any one time;

(D) No person may set or operate a fishwheel within 75 feet of another fishwheel;

(E) No fishwheel may have more than two baskets;

(F) The permit holder must personally operate the fishwheel or dip net. A subsistence fishwheel or dip net permit may not be loaned or transferred except as permitted by this Part;

(G) A wood or metal plate at least 12 inches high by 12 inches wide, bearing the permit holder's name and address in letters and numerals at least one inch high, must be attached to each fishwheel so that the name and address are plainly visible.

(iv) Salmon may not be taken in any area closed to commercial salmon fishing unless otherwise permitted.

(v) In locations open to commercial salmon fishing and in conformance with commercial salmon fishing regulations, the annual subsistence salmon limit is as follows:

(A) 15 salmon for a household of one person;

(B) 30 salmon for a household of two persons;

(C) 10 salmon for each additional person in a household over two;

(D) No more than five king salmon may be taken per permit.

(vi) All tributaries of the Copper River and waters of the Copper River are closed to the taking of salmon.

(vii) Crosswind Lake is closed to all subsistence fishing.

(viii) Salmon may be taken for subsistence purposes in the waters of the Southwestern District only as follows:

(A) Only pink salmon may be taken;

(B) Pink salmon may be taken by dipnets or by a rod and reel;

(C) Pink salmon may be taken only from May 15–September 30;

(D) Fishing periods are from May 15 until two days before the commercial opening of the Southwestern District, seven days per week; during the commercial salmon fishing season, only during open commercial salmon fishing periods; and from two days following the closure of the commercial salmon season until September 30, seven days per week;

(E) There are no harvest and possession limits for this fishery;

(F) ADF&G permits may be issued only at Chenega Bay village.

(ix) Salmon may be taken for subsistence purposes in the waters north of a line from Porcupine Point to Granite Point, and south of a line from Point Lowe to Tongue Point, only as follows:

(A) Only pink salmon may be taken;

(B) Pink salmon may be taken by dipnets or by a rod and reel;

(C) Pink salmon may be taken only from May 15–September 30;

(D) Fishing periods are from May 15 until two days before the commercial opening of the Southwestern District, seven days per week; during the commercial salmon fishing season, only during open commercial salmon fishing periods; and from two days following the closure of the commercial salmon season until September 30, seven days per week;

(E) There are no harvest and possession limits for this fishery;

(F) ADF&G permits may be issued only at Tatitlek village.

(12) *Yakutat Area.* (i) Salmon, trout, and char may be taken only by rod and reel or under authority of a subsistence fishing permit issued by the ADF&G.

(ii) Salmon, trout, or char taken incidentally by gear operated under the terms of a subsistence permit for salmon are legally taken and possessed for subsistence purposes; the holder of a subsistence salmon permit must report any salmon, trout, or char taken in this manner on his or her permit calendar.

(iii) Subsistence fishermen must remove the dorsal fin from subsistence-caught salmon when taken.

(13) *Southeastern Alaska Area.* (i) Salmon, trout, char and herring spawn on kelp may be taken only by rod and reel or under authority of a subsistence fishing permit issued by the ADF&G.

(ii) No person may possess subsistence-taken and sport-taken salmon on the same day.

(iii) Salmon, trout or char taken incidentally by gear operated under the terms of an ADF&G subsistence permit for salmon are legally taken and possessed for subsistence purposes; the holder of a subsistence salmon permit must report any salmon, trout, or char taken in this manner on his or her permit calendar.

(iv) Subsistence fishermen shall immediately remove the dorsal fin of all salmon when taken.

§ ____.27 Subsistence taking of shellfish.

(a) Regulations in this section apply to subsistence taking of dungeness crab, king crab, tanner crab, shrimp, clams, abalone, and other shellfish or their parts.

(b) Shellfish may be taken for subsistence uses at any time in any area of the public lands by any method unless restricted by the subsistence fishing regulations of § ____.26 or this section.

(c) Methods, means, and general restrictions. (1) The harvest limit specified herein for a subsistence season for a species and the State bag limit set for a State season for the same species are not cumulative. This means that a person or designated group who has taken the harvest limit for a particular species under a subsistence season specified herein may not after that, take any additional shellfish of that species under any other bag limit specified for a State season.

(2) Unless otherwise provided in this section, gear as specified in the definitions of § ____.26 is legal for subsistence taking of shellfish.

(3) It is prohibited to buy or sell subsistence-taken shellfish, their parts, or their eggs, unless otherwise specified.

(4) The use of explosives and chemicals is prohibited, except that chemical baits or lures may be used to attract shellfish.

(5) Each subsistence fisherman shall plainly and legibly inscribe their first initial, last name and address on a keg or buoy attached to unattended subsistence fishing gear. Subsistence fishing gear may not display a permanent ADF&G vessel license number. The keg or buoy may be any color except red.

(6) A side wall of all subsistence shellfish pots must contain an opening with a perimeter equal to or exceeding one-half of the tunnel eye opening perimeter. The opening must be laced, sewn, or secured together by untreated cotton twine or other natural fiber no larger than 120 thread. Dungeness crab and shrimp pots may have the pot lid tiedown straps secured to the pot at one end by untreated cotton twine no larger than 120 thread, as a substitute for the above requirement.

(7) No person may mutilate or otherwise disfigure a crab in any manner which would prevent determination of the minimum size restrictions until the crab has been processed or prepared for consumption.

(8) In addition to the marking requirements in paragraph (c)(5) of this section, kegs or buoys attached to subsistence crab pots must also be inscribed with the name or U.S. Coast Guard number of the vessel used to operate the pots.

(9) No more than five pots per person and 10 pots per vessel may be used to take crab, except as specified in paragraph (f) of this section.

(10) In the subsistence taking of shrimp in the Glacier Bay National Preserve, no person may use more than 10 pots, and no more than 20 pots may be operated from a vessel. In the subsistence taking of shellfish other than shrimp in the Glacier Bay National Preserve, no person may operate more than five pots of any type, and no more than 10 pots of any type may be operated from a vessel.

(d) Subsistence take by commercial vessels. No fishing vessel which is commercially licensed and registered for shrimp pot, shrimp trawl, king crab,

tanner crab, or dungeness crab fishing may be used for subsistence take during the period starting 14 days before an opening until 14 days after the closure of a respective open season in the area or areas for which the vessel is registered.

(e) Unlawful possession of subsistence shellfish. Shellfish or their parts taken in violation of Federal or State regulations may not be possessed, transported, given, received or bartered.

(f) Subsistence shellfish areas and pertinent restrictions. (1) *Southeastern Alaska-Yakutat Area.* Shellfish may be taken for subsistence purposes in the Glacier Bay National Preserve only under the authority of a subsistence shellfish fishing permit.

(2) *Cook Inlet Area.* All waters within the boundaries of the Kenai National Wildlife Refuge are closed to the taking of shellfish for subsistence purposes.

(3) *Kodiak Area.* (i) Shellfish may be taken for subsistence purposes only under the authority of a subsistence shellfish fishing permit issued by the ADF&G.

(ii) The operator of a commercially licensed and registered shrimp fishing vessel must obtain a subsistence fishing permit from the ADF&G before subsistence shrimp fishing during a closed commercial shrimp fishing season or within a closed commercial shrimp fishing district, section or subsection. The permit shall specify the area and the date the vessel operator intends to fish. No more than 500 pounds (227 kg) of shrimp may be in possession aboard the vessel.

(iii) The daily harvest and possession limit is 12 male dungeness crab per person.

(iv) In the subsistence taking of king crab:

(A) The daily harvest and possession limit is six male crab per person;

(B) All crab pots used for subsistence fishing and left in saltwater unattended longer than a two-week period shall have all bait and bait containers removed and all doors secured fully open;

(C) No more than five crab pots may be used to take king crab; each pot can be no more than 75 cubic feet in capacity;

(D) King crab may be taken only from June 1–January 31, except that the subsistence taking of king crab is prohibited in waters 25 fathoms or greater in depth during the period 14 days before and 14 days after open commercial fishing seasons for red king crab, blue king crab, or tanner crab in the location;

(E) The waters of the Pacific Ocean enclosed by the boundaries of Womans Bay, Gibson Cove, and an area defined by a line ½ mile on either side of the mouth of the Karluk River, and extending seaward 3,000 feet, and all waters within 1,500 feet seaward of the shoreline of Afognak Island are closed to the harvest of king crab except by Federally-qualified subsistence users.

(v) In the subsistence taking of tanner crab:

(A) No more than five crab pots may be used to take tanner crab;

(B) From July 15–February 10, the subsistence taking of tanner crab is prohibited in waters 25 fathoms or greater in depth, unless the commercial tanner crab fishing season is open in the location;

(C) The daily harvest and possession limit is 12 male crab per person.

(4) *Alaska Peninsula-Aleutian Islands Area.* (i) Shellfish may be taken for subsistence purposes only under the authority of a subsistence shellfish fishing permit issued by the ADF&G.

(ii) The operator of a commercially licensed and registered shrimp fishing vessel must obtain a subsistence fishing permit from the ADF&G prior to subsistence shrimp fishing during a closed commercial shrimp fishing season or within a closed commercial shrimp fishing district, section, or subsection; the permit shall specify the area and the date the vessel operator intends to fish; no more than 500 pounds (227 kg) of shrimp may be in possession aboard the vessel.

(iii) The daily harvest and possession limit is 12 male dungeness crab per person.

(iv) In the subsistence taking of king crab:

(A) The daily harvest and possession limit is six male crab per person;

(B) All crab pots used for subsistence fishing and left in saltwater unattended longer than a two-week period shall have all bait and bait containers removed and all doors secured fully open;

(C) Crab may be taken only from June 1–January 31.

(v) The daily harvest and possession limit is 12 male tanner crab per person.

(5) *Bering Sea Area.* (i) In waters South of 60° North latitude, shellfish may be taken for subsistence purposes only under the authority of a subsistence shellfish fishing permit issued by the ADF&G.

(ii) In that portion of the area north of the latitude of Cape Newenham, shellfish may only be taken by shovel, jigging gear, pots and ring net.

(iii) The operator of a commercially licensed and registered shrimp fishing vessel must obtain a subsistence fishing permit from the ADF&G prior to subsistence shrimp fishing during a closed commercial shrimp fishing season or within a closed commercial shrimp fishing district, section or subsection; the permit shall specify the area and the date the vessel operator intends to fish; no more than 500 pounds (227 kg) of shrimp may be in possession aboard the vessel.

(iv) In waters south of 60° N. lat., the daily harvest and possession limit is 12 male dungeness crab per person.

(v) In the subsistence taking of king crab:

(A) In waters south of 60° N. lat., the daily harvest and possession limit is six male crab per person;

(B) All crab pots used for subsistence fishing and left in saltwater unattended longer than a two-week period shall have all bait and bait containers removed and all doors secured fully open;

(C) In waters south of 60° N. lat., crab may be taken only from June 1–January 31.

(vi) In waters south of 60° N. lat., the daily harvest and possession limit is 12 male tanner crab.

Dated: May 21, 1998.

Thomas H. Boyd,

Acting Chair, Federal Subsistence Board.

Dated: May 22, 1998.

James A. Caplan,

Acting Regional Forester, USDA—Forest Service.

[FR Doc. 98–16686 Filed 6–26–98; 8:45 am]

BILLING CODE 3410–11–P and 4310–55–P

federal register

Monday
June 29, 1998

Part IV

Environmental Protection Agency

40 CFR Parts 750 and 761
Disposal of Polychlorinated Biphenyls (PCBs); Final Rule

ENVIRONMENTAL PROTECTION AGENCY

40 CFR Parts 750 and 761

[OPPTS–66009C; FRL–5726–1]

RIN 2070-AC01

Disposal of Polychlorinated Biphenyls (PCBs)

AGENCY: Environmental Protection Agency (EPA).

ACTION: Final rule.

SUMMARY: EPA is amending its rules under the Toxic Substances Control Act (TSCA) which address the manufacture, processing, distribution in commerce, use, cleanup, storage and disposal of polychlorinated biphenyls (PCBs). This rule provides flexibility in selecting disposal technologies for PCB wastes and expands the list of available decontamination procedures; provides less burdensome mechanisms for obtaining EPA approval for a variety of activities; clarifies and/or modifies certain provisions where implementation questions have arisen; modifies the requirements regarding the use and disposal of PCB equipment; and addresses outstanding issues associated with the notification and manifesting of PCB wastes and changes in the operation of commercial storage facilities. This rule also codifies policies that EPA has developed and implemented over the past 19 years. This rule will streamline procedures and focuses on self-implementing requirements and the elimination of duplication. Some activities currently requiring PCB disposal approvals will no longer require those approvals. EPA believes that this rule will result in substantial cost savings to the regulated community while protecting against unreasonable risk of injury to health and the environment from exposure to PCBs.

DATES: This rule shall become effective August 28, 1998. This rule shall be promulgated for purposes of judicial review at 1 p.m. eastern daylight time on July 29, 1998 (see 40 CFR 23.5, 50 FR 7271).

The information collection requirements contained in this rule have not yet been approved by the Office of Management and Budget (OMB) and are not effective until OMB approves them. Once OMB has approved the information collection requirements contained in this rule, EPA will publish another document in the **Federal Register** to announce OMB's approval and to amend 40 CFR part 9 to incorporate the assigned OMB approval number into the table of OMB control numbers for EPA regulations at 40 CFR 9.1.

FOR FURTHER INFORMATION CONTACT: Susan B. Hazen, Director, Environmental Assistance Division (7408), Office of Pollution Prevention and Toxics, Rm. E-543B, Environmental Protection Agency, 401 M St., SW., Washington, DC 20460, (202) 554–1404, TDD (202) 554–0551, e-mail: TSCA-Hotline@epamail.epa.gov.

SUPPLEMENTARY INFORMATION:

Electronic Availability:

Electronic copies of the following documents: *Response to Comments Document on the Proposed Rule--Disposal of Polychlorinated Biphenyls* and *Support Document for the PCB Disposal Amendments, Final Rule* are available from the EPA Home Page at the Federal Register - Environmental Documents entry for this document under ''Laws and Regulations'' (http://www.epa.gov/fedrgstr/).

The following outline is provided to assist the reader in locating topics of interest in the preamble.

I. Regulated Entities
II. Background
A. General Reaction to Proposed Rule
B. Overview of Final Rule
C. Statutory Authorities
D. Unreasonable Risk Standard
III. Issues Not Addressed by this Rulemaking
A. Preempting Other Requirements
B. Toxicity of PCBs
C. Issues Deferred for Later Rulemaking
IV. Notice of Final Rulemaking
A. General Requirements
B. Manufacturing, Processing, Distribution in Commerce, and Use
C. Storage of PCB Articles Designated for Reuse
D. Marking
E. Disposal
F. Storage for Disposal
G. TSCA PCB Coordinated Approvals
H. Decontamination
I. Exemptions for Manufacturing, Importing, Processing, Distributing in Commerce, and Exporting PCBs
J. Transboundary Movements
K. Change in Reportable Quantity — Spill Cleanup Policy
L. Records and Monitoring
M. Amendments to the Notification and Manifesting Rule
V. Chart of Marking and Recordkeeping Requirements and EPA Forms
VI. Rulemaking Record
VII. References
VIII. Regulatory Assessment Requirements
A. Executive Order 12866
B. Regulatory Flexibility Act
C. Paperwork Reduction Act
D. Unfunded Mandates Reform Act and Executive Order 12875
E. Executive Order 12898
F. Executive Order 13045
G. National Technology Transfer and Advancement Act (NTTAA)
H. Submission to Congress and the General Accounting Office

I. Regulated Entities

Entities potentially regulated by this action are those which manufacture, process, distribute in commerce, use, or dispose of PCBs. Regulated categories and entities include:

Category	Examples of Regulated Entities
Industry	Chemical manufacturers, electroindustry manufacturers, end-users of electricity, PCB waste handlers (e.g., storage facilities, landfills and incinerators), waste transporters, general contractors
Utilities and rural electric cooperatives	Electric power and light companies
Individuals, Federal, State, and Municipal Governments	Individuals and agencies which own, process, distribute in commerce, use, and dispose of PCBs

This table is not exhaustive, but lists the types of entities that could potentially be regulated by this action. Other types of entities may also be regulated. To determine whether your entity is regulated by this action, carefully examine the applicability criteria in 40 CFR part 761. If you have questions regarding the applicability of this action to a particular entity, consult the person listed in the preceding ''FOR FURTHER INFORMATION CONTACT'' unit.

II. Background

A. General Reaction to Proposed Rule

On June 10, 1991 (56 FR 26738), EPA issued an Advanced Notice of Proposed Rulemaking (ANPR) to solicit comments on possible changes to the PCB disposal regulations promulgated under the authority of TSCA section 6(e) and codified in 40 CFR part 761. On December 6, 1994 (59 FR 62788) (FRL-4167-1), EPA issued a Notice of Proposed Rulemaking (NPRM) after considering comments and supporting data on the issues outlined in the ANPR and other issues brought to EPA's attention during the course of implementing the TSCA PCB program. After publication of the NPRM, EPA conducted a series of briefings on the

proposed amendments to better acquaint potential commenters with the potential impacts so that they could better formulate their comments. On June 6 and 7, 1995, EPA held a public hearing on the proposed amendments. A transcript of that hearing is in the public record. Almost all commenters supported the objectives EPA proposed for the PCB program, but they also provided numerous comments on how to better achieve those objectives.

EPA has prepared a Response to Comments document which addresses comments not otherwise discussed in this preamble. You may review the Response to Comments document in the TSCA Public Docket (OPPTS docket control number 66009A), Rm. B607, Northeast Mall at the Environmental Protection Agency, 401 M St., SW., Washington, DC.

B. Overview of Final Rule

This rulemaking promulgates significant amendments affecting the use, manufacture, processing, distribution in commerce, and disposal of PCBs.

These amendments add regulatory provisions authorizing certain uses of PCBs; authorizing the manufacture, processing, and distribution in commerce of PCBs for use in research and development activities; specifying additional alternatives for the cleanup and disposal of PCBs; and clarifying the processing for disposal exemption.

These amendments also add sections establishing standards and procedures for disposing of PCB remediation waste and certain products manufactured with PCBs; establishing procedures for determining PCB concentration; establishing standards and procedures for decontamination; establishing controls over the storage of PCBs for reuse; and establishing a mechanism for coordinating TSCA disposal approvals for the management of PCB wastes among various Federal programs. These amendments also update several marking, recordkeeping, and reporting requirements.

The regulatory requirements that apply to materials containing PCBs depend in part on the PCB concentration. To ensure a consistent and reproducible basis for determining PCB concentrations, § 761.1(b)(4) provides that the concentration of non-liquid PCBs must be determined on a dry weight basis; the concentration of liquid PCBs must be determined on a wet weight basis; and the concentration of multi-phasic (i.e., both non-liquid and liquid) PCBs must be determined by separating the phases and analyzing each phase.

C. Statutory Authorities

This final rule is issued pursuant to sections 6(e)(1), 6(e)(2)(B), 6(e)(3)(B) and 18(b) of TSCA. Section 6(e)(1)(A) gives EPA the authority to promulgate rules regarding the disposal of PCBs (15 U.S.C. 2605(e)(1)(A)). TSCA section 6(e)(1)(B) provides broad authority for EPA to promulgate rules that would require PCBs to be marked with clear and adequate warnings (15 U.S.C. 2605(e)(1)(B)). TSCA section 6(e)(2)(B) gives EPA the authority to authorize the use of PCBs in other than a totally enclosed manner based on a finding of no unreasonable risk of injury to health or the environment (15 U.S.C. 2605(e)(2)(B)). TSCA section 6(e)(3)(B) provides that any person may petition EPA for an exemption from the prohibition on the manufacture, processing, and distribution in commerce of PCBs (15 U.S.C. 2605(e)(3)(B)). EPA may grant an exemption based on findings that an unreasonable risk of injury to health or the environment will not result, and that the petitioner has made good faith efforts to develop a substitute for PCBs.

D. Unreasonable Risk Standard

Under TSCA section 6(e), EPA makes decisions using the concept of ''unreasonable risk.'' In evaluating whether a risk is unreasonable, EPA considers the probability that a regulatory action will harm health or the environment, and the costs and benefits to society that are likely to result from the action. See generally, 15 U.S.C. 2605(c)(1). Specifically, EPA considers the following factors:

1. *Effects of PCBs on human health and the environment.* EPA considers the magnitude of exposure and the effects of PCBs on humans and the environment. The following discussion summarizes EPA's assessment of these factors.

a. *Health effects.* EPA has determined that PCBs are toxic and persistent. PCBs can enter the body through the lungs, gastrointestinal tract, and skin, can circulate throughout the body, and can be stored in the fatty tissue. Available animal studies indicate an oncogenic potential. EPA has also found that PCBs may cause reproductive effects and developmental toxicity in humans. Chloracne may also occur in humans exposed to PCBs.

b. *Environmental effects.* Certain PCB congeners are among the most stable chemicals known, which decompose very slowly once they are released in the environment. PCBs are absorbed and stored in the fatty tissue of higher organisms as they bioaccumulate up the food chain through invertebrates, fish, and mammals. This ultimately results in human exposure through consumption of PCB-containing food sources. PCBs also have reproductive and other toxic effects in aquatic organisms, birds, and mammals.

c. *Risks.* Toxicity and exposure are the two basic components of risk. EPA has concluded that any exposure of humans or the environment to PCBs may be significant, depending on such factors as the quantity of PCBs involved in the exposure, the likelihood of exposure to humans and the environment, and the effect of exposure. Minimizing exposure to PCBs should minimize any eventual risk. EPA has quantified risks from certain exposure scenarios (See for example, Refs. 1 and 2). For example, assessments of the risks from exposure to PCBs in soil have been used as the basis for several of today's regulatory actions.

2. *Benefits of PCBs and the availability of substitutes.* The benefits to society of particular activities involving PCBs vary. PCBs were used principally because they had excellent dielectric properties. The dielectric properties were supplemented by thermal stability and even the ability to retard burning, a considerable problem with the most commonly used alternative dielectric fluid. For other uses, thermal stability and flame retardancy were enhanced by resistance to degradation by chemical oxidizers, acids and bases. Although it is difficult to estimate the financial benefits from the reduction in industrial fires from the use of PCBs, it is clear that there were far fewer fires from the use of PCBs as alternatives to other commonly used flammable and ignitable fluids. These benefits are especially significant in uses where heat was generated or where a fire from another source would be augmented and intensified by the presence of flammable fluids. Unfortunately, the properties of thermal stability and resistance to chemical degradation which made PCBs so useful industrially, make PCBs a problem when they are released to the environment, where they and their toxic effects persist for long periods. The toxic effects of PCBs do not play a role in most uses where there is little, if any, actual exposure. So long as the PCBs are used inside containers and are not available for potential exposure or release to the environment, the benefits from their continued use, versus the cost to decontaminate or dispose of and replace them, can outweigh the risks.

While some electrical equipment manufactured to contain PCBs prior to 1978 is still in use, most of the equipment in use that contains PCBs

was manufactured to use another dielectric fluid, but was contaminated with PCBs during manufacturing or servicing. In most cases, the PCB concentration is low and the industrial properties of PCBs are for all practical purposes no longer contributing to continued use of the equipment. Similarly, because of their chemical inertness, the low concentration PCBs do not interfere with or compromise the use of the contaminated alternative dielectric fluids. Therefore, the benefits from continued use of the contaminated equipment, as opposed to decontamination or disposal and replacement, can continue to be realized.

3. *Costs*. The reasonably ascertainable costs of this rulemaking are discussed in detail in ''Cost Impacts of the Final Regulation Amending the PCB Disposal Regulations at 40 CFR Part 761'' (Ref. 3).

Overall, this rulemaking is intended to protect against unreasonable risks from PCBs by providing cost-effective and environmentally protective disposal options that will reduce exposure to PCBs by encouraging their removal from the environment, thereby reducing the potential risk to human health and the environment from PCBs. The rule also authorizes certain continued uses of PCBs and materials contaminated with PCBs where exposure can be controlled and where removal and disposal of the material would be costly or impractical. More detailed analyses of unreasonable risk specific to individual regulatory provisions are included throughout the preamble.

III. Issues Not Addressed by this Rulemaking

A. Preempting Other Requirements

Several commenters raised the issue of a general preemption under TSCA of all other Federal, State, and local laws and regulations concerning the management of PCB wastes. As stated in the NPRM preamble, TSCA does not allow the Administrator to preempt State disposal rules which describe the manner or method of disposal of a chemical substance or mixture, or in this instance, the disposal of PCBs (59 FR 62832). Moreover, EPA believes that such a preemptive rule would not flow from any of the proposed changes and therefore is not within the scope of this rulemaking.

B. Toxicity of PCBs

Several commenters argued that EPA should reassess the toxicity of PCBs. In the NPRM, EPA indicated that it had undertaken a study of PCB toxicity. This study, completed in September 1996, found PCBs to be carcinogenic, but concluded that PCBs are not as potent as previously determined (Ref. 4). In today's final rule, EPA has proceeded with the TSCA PCB requirements based on the risk data relied on in the NPRM. The Agency will consider additional revisions to these TSCA regulations in the future to accommodate additional new information clarifying PCB non-cancer effects and bioaccumulation factors, and to remain consistent with regulations issued under other statutes, such as the Clean Water Act (CWA), and with other EPA policies, such as those governing response actions under the Comprehensive Environmental Response, Compensation, and Liability Act (CERCLA). EPA will follow closely the public comment process on other rulemakings, and upon completion of a balanced assessment of both the cancer and non-cancer effects, will adjust its regulatory standards on PCBs as appropriate.

In adopting this policy position, EPA weighed the potential benefits and costs associated with revising the final rule to reflect the most recent PCB cancer potency information. Such a change at this time would delay the issuance of the final rule and its anticipated large cost savings, for likely only very marginal benefits.

C. Issues Deferred for Later Rulemaking

EPA today is not finalizing provisions regarding exports of PCBs (see Unit IV.J. of this preamble), or use authorizations for non-liquid PCBs. EPA intends to address these issues in future rulemakings.

In the NPRM, EPA solicited comments on the appropriate levels for corrective action of PCB contamination under the Resource Conservation and Recovery Act (RCRA) (59 FR 62794-95). EPA is not taking final action on this part of the proposal today. Those comments will be addressed by the Office of Solid Waste and Emergency Response (OSWER) during the process for promulgating final RCRA corrective actions regulations. (For more information, see 61 FR 19432, May 1, 1996.) The Office of Pollution Prevention and Toxics will continue to work with OSWER and other Offices in the Agency to coordinate programs concerning PCBs.

In addition, EPA has issued in the **Federal Register** a Notice of Intent to implement a Performance Based Measurement System (PBMS), under which the regulated community would be able to select any appropriate analytical test method for use in complying with EPA's regulations (62 FR 52098, October 6, 1997) (FRL–5903–2). Implementation of this program for a given rule requires that EPA propose changes and seek public comment on them. EPA intends to propose such changes to the TSCA PCB regulations in the future. The Agency defines PBMS as a set of processes wherein the data quality needs, mandates, or limitations of a program or project are specified, and serve as criteria for selecting appropriate methods to meet those needs in a cost-effective manner. Where PBMS is implemented, the regulated community would be able to select any appropriate analytical test method for use in complying with EPA's regulations. It is EPA's intent that implementation of PBMS have the overall effect of improving data quality and encouraging advancement of analytical technologies. The Agency anticipates proposing amendments to certain of its regulations, as needed, to incorporate PBMS into its regulatory programs. EPA intends to implement PBMS on a program-specific basis. Each of EPA's programs is presently developing a plan for implementation. EPA intends to provide ample opportunity for the public to comment on specific aspects of PBMS implementation.

Finally, EPA is deferring final regulatory action on proposed § 761.30(q) for future rulemaking. In the NPRM, EPA solicited comments on authorizing the use of PCBs in existing applications that had not been authorized by previous PCB rulemakings (59 FR 62809, December 6, 1994). Although EPA received many comments supporting the proposed authorizations, many commenters wanted EPA to drop many, if not all, of the proposed conditions for the authorizations. EPA needed additional time to review the recently submitted risk assessment studies and also to obtain additional data for certain uses in order to reduce the uncertainties associated with the available studies. EPA therefore intends to publish a Supplemental Notice to solicit additional data on the items that EPA proposed authorizing in the NPRM. EPA is interested in any data that could be used by the Agency in its review of the risks of exposure from PCBs that might be associated with the existing applications of the PCB-containing items that were identified in the NPRM. EPA is particularly interested in data relating to the following items, when such items have been identified as containing PCBs: certain paints, caulking, and coal-tar enamel coatings used on steel water pipe and underground tanks. Due to the potential

lag time that may be necessary to either develop or assemble these data, a listing of the data elements that are required for this analysis is provided below.

1. *Wipe sample data for each of the products (or classes of products, i.e., paint) for which uses would be authorized*. These data should be collected from products that are known to contain PCBs (i.e., based on bulk sample results or from historic knowledge). Also, the detection limits for these materials should be sufficiently low to ensure that risks can be calculated down to the 10^{-6} range. Estimates of the detection limits that would be required to estimate a 10^{-6} risk level for the products for which exposure scenarios have been developed by EPA can be found in Table 1 of the document ''Support Document for the PCB Disposal Amendments, Final Rule'' (Ref. 5). This document has been placed in the docket and is available at EPA's web site under ''Laws and Regulations'' at the Federal Register-Environmental Documents entry (http://www.epa.gov/fedrgstr/).

2. *Transfer data*. Information on the transfer of PCBs to human skin from the non-liquid PCBs listed in Table 1 of the support document. EPA recognizes that these data may not be available. If such data are not available, EPA requests suggestions regarding how to factor in a value representing the likely transfer of PCBs to human skin.

3. *Air monitoring data for each of the products (or classes of products, i.e., paint) for which uses would be authorized*. These data should be collected from products that are known to contain PCBs (i.e., based on bulk sample results or from historic knowledge). Also, the detection limits for these materials should be sufficiently low to ensure that risks can be calculated down to the 10^{-6} range. See Table 1 of the support document for estimates of the detection limits that would be required to estimate a 10^{-6} risk level for the products for which exposure scenarios have been developed by EPA.

EPA is particularly interested in data that are representative of the highest concentrations of PCBs in the product (or class of products, i.e., paint). For example, commenters provided information that paint formulations with 10 to 12% PCBs were recommended in the commercial formulation manuals. Therefore, wipe sample and air monitoring data for products such as paints should come from those coatings with bulk sample levels of 10 to 12% PCBs. If only data from coatings with bulk sample levels of less than 10 to 12% PCBs are available, EPA would still be interested in receiving that data. In addition to the collected data, EPA would like a copy of the sampling plan that was used in collecting the data and a description of the quality assurance/quality control procedures that were applied to the data set.

The Supplemental Notice which EPA plans to publish later this year, will provide specific information regarding the data request and the date and location for data submissions.

IV. Notice of Final Rulemaking

A. General Requirements

1. *Applicability of regulations* The regulatory requirements that apply to materials containing PCBs depend in part on the PCB concentration. To identify what regulatory requirements apply to a material that contains PCBs, a person has two options: either to determine the PCB concentration and apply the regulations specified for that concentration and type of material, or to assume the concentration to be 500 parts per million (ppm) or greater. Under the second option, it is not necessary to determine the PCB concentration of the material, but the most restrictive regulatory requirements apply (see § 761.50(a)(5) in the regulatory text).

Where liquid samples cannot be collected, such as on contaminated surfaces, surface sampling and concentration levels have been developed (see part 761, subpart G, The PCB Spill Cleanup Policy), and are included at § 761.1(b)(3). The surface concentrations, which were based on dermal exposure, are equated to the existing PCB regulations which included economic considerations. For example, the regulations established for PCBs at concentrations of 50 to less than 500 ppm apply to contaminated surfaces at concentrations of greater than 10 to less than 100 micrograms per 100 square centimeters (>10-<100 μg/100 cm^2). In addition, specific sections of today's rule codify the relationship between surface contamination and the existing regulations based on milligrams of PCBs per liter of liquid on a dry weight basis.

a. *Determination of PCB concentrations—wet weight/dry weight*. The Agency sought to ensure a consistent and reproducible basis for determining PCB concentrations by specifying at § 761.1(b)(4) how the PCB levels were to be determined in liquids, non-liquids, or mixtures of both. If the PCBs are ''non-liquid PCBs'' as defined in § 761.3, then a person must determine PCB concentrations using dry weight (i.e., excluding the weight of water). If the PCBs are ''liquid PCBs'' as defined in § 761.3, then a person must determine PCB concentrations using wet weight. If the PCBs are multi-phasic (i.e., both non-liquid and liquid PCBs), then a person must separate the phases and perform the appropriate analysis on each phase. PCB determinations must be made on a weight-per-weight basis (e.g., milligrams per kilogram), or, for liquids, on a weight-per-volume basis (e.g., milligrams per liter) if the density of the liquid is also reported (see § 761.1(b)(2) in the regulatory text).

The Agency proposed the definition of ''non-liquid PCBs'' to mean PCBs which contain no liquids which pass through the filter when using the paint filter test method (EPA Method 9095 in ''Test Methods for Evaluating Solid Waste'' (SW-846)) (Ref. 6). Commenters indicated that if materials contain no visible liquids or contained no liquid phases, they should not be required to perform the paint filter test. The Agency has modified the definition to include visual inspection of the materials to determine that they do not flow at room temperature (25 °C or 77 °F). For all other materials, such as sludges or sediments potentially containing free liquids, EPA has retained a paint filter test to determine the presence of free liquids.

The Agency proposed the definition of ''dry weight basis'' to mean reporting chemical analysis results by excluding the weight of the water in the sample. Commenters indicated that certain methods of removing water could skew the analytical results. Since, in this instance, the Agency wants to exclude the water weight, it amended the definition of ''dry weight'' in the final rule to specify removing the weight of the water. EPA also included examples for removing water from a sample, such as air drying at ambient temperature, filtration, decantation, or heating at a low temperature followed by cooling in the presence of a desiccant. The Agency is not specifying which method to use, only that the chosen method must be applicable to measuring PCBs in the sample matrix at the concentration of concern and must be reproducible.

The Agency proposed the definition of ''wet weight basis'' to mean reporting chemical analysis results by including the weight of all dissolved water in a homogenous liquid. A commenter believes that wet weight should be the weight of the PCBs compared to the weight or the volume of all liquids, excluding the weight or volume of non-liquid materials that can be separated. Under the TSCA section 6(e) PCB regulations, EPA has always used weight/weight for determining PCB

concentrations. However, the Agency has amended the definition of ''wet weight'' in the final rule to allow sample analytical results to be reported on a weight per volume basis rather than a weight/weight basis, if the density of the liquid is also reported.

For multi-phasic wastes, the disposal requirements are generally based on the highest PCB concentration in any phase. For example, a sample of sludge containing both non-liquid and liquid phases would first need to be separated into its various phases. Then each phase must be analyzed for PCB concentration. Assume that this separation and analysis results in a non-liquid phase containing 600 ppm PCBs, an aqueous liquid phase containing 100 µg/L, and a non-aqueous phase containing 60 ppm. At the time of disposal, the sludge may either be separated into phases or disposed of without separation. If it is disposed of without separation, it must be disposed of in accordance with the requirements applicable to the phase with the highest concentration, i.e., as non-liquid waste ≥500 ppm PCBs. If the waste is separated into phases, each phase may be disposed of according to the disposal requirements applicable to that phase.

In general, the anti-dilution rule requires that even if the phases were to be disposed of separately, all phases would have to be disposed of based on the highest concentration in any phase in the sample, since the phase contaminated at a lower level was in contact with a more contaminated phase. However, in the PCB remediation waste (§ 761.61) and decontamination (§ 761.79) provisions, EPA is allowing each separated phase to be disposed of or decontaminated, respectively, based on its own PCB concentration.

Some commenters anticipated that by requiring determining PCB levels in various media or phases to be analyzed separately, EPA was also requiring that the phases be separated for disposal. Commenters consistently indicated that these additional analytical and disposal requirements would be extremely burdensome, costly, and unnecessary. EPA did not intend to require that multi-phasic waste be separated for disposal. Multi-phasic waste samples must be separated for analysis because the PCBs may have concentrated in one of the phases. Proper separation allows the multi-phasic sample to be analyzed using consistent and reproducible methods. The waste as a whole must be disposed of based on the highest concentration in any phase, but need not be separated into phases at the time of disposal.

b. *Application of the anti-dilution provision*. The ''anti-dilution'' provision at 40 CFR 761.1(b)(5) prohibits a person from avoiding specific PCB disposal requirements because a PCB concentration was reduced or shifted from one material or environmental medium to another by adding a diluent, or separating or concentrating the PCBs.

The Agency did not propose to modify this important provision, but did receive comments on it. The Agency did not find them compelling, and therefore, the anti-dilution provision remains in effect unchanged. Any specific variances from the anti-dilution provision, such as for certain PCB remediation waste, have been included in the appropriate provisions of subpart D of part 761. EPA continues to be concerned about intentional or fortuitous PCB dilution and remains committed to stringent regulation of PCB waste disposal. In finalizing several variances from the anti-dilution provision, EPA is simply recognizing that where PCBs have already been released, the critical disposal issue is to mitigate the damage from the release.

c. *PCB concentration assumptions for use*. EPA proposed to add § 761.1(g) to exempt oil-filled equipment manufactured after July 2, 1979, from the scope of the rule, provided that the equipment: (1) Had a permanent label or mark affixed by the manufacturer indicating that it contained no PCBs; or (2) had not been serviced with PCBs and was accompanied by documentation from the manufacturer certifying that the equipment contained no PCBs when manufactured.

EPA also proposed to amend the existing definition of ''PCB Transformer'' at § 761.3 to codify its policy (44 FR 31517, May 31, 1979) that certain transformers for which the PCB concentration has not been established must be assumed to contain greater than 500 ppm PCBs. EPA also requested information regarding numbers of small transformers or other pieces of electrical equipment that contain PCBs (59 FR 62820, December 6, 1994). Some examples are: potential transformers, current transformers, instrument transformers, grounding transformers, voltage transformers, and ignition transformers. These small transformers range in size from several inches to several feet in height. They can be filled with oil, epoxy, or tar-like potting compounds that contain PCBs, or they can be ''dry.'' These small transformers generally do not have nameplates and are not easily sampled. Unless the PCB concentrations were established, these transformers would have to be assumed to be PCB Transformers under the proposed revision to the definition of that term.

Many commenters stated that the proposed amendment to the definition of ''PCB Transformer'' would be burdensome and costly with no apparent environmental benefit. They indicated that changing the definition would capture many more transformers, i.e., those which had not been tested or those with no information regarding the type of dielectric fluid on their nameplate. Many of these newly captured transformers probably were manufactured after July 1979, and their nameplates might not indicate the type of dielectric fluid they contain. Commenters suggested that instead of amending the definition, EPA should require that these units be tested prior to disposal.

Commenters were also concerned that under the proposed PCB Transformer definition, EPA would drop the generic exclusions from the assumption requirement for transformers manufactured after 1979, since transformer nameplates and other records on post-1979 transformers may only indicate the type of dielectric fluid in the unit, and not the absence of PCBs.

Commenters stated that defining ''PCB Transformer'' to include small transformers was costly and burdensome because, like small capacitors, they are hard to find, cannot be easily tested without destroying their integrity, and generally do not contain information regarding dielectric fluid.

Rather than finalizing proposed § 761.1(g) and amending the PCB-Transformer definition as proposed, EPA has created new § 761.2, PCB Concentration Assumptions for Use, to set forth the PCB concentration assumptions for the use of transformers and other oil-filled electrical equipment. Section 761.2 codifies EPA's policy (the assumption policy) that the owner of mineral oil-filled electrical equipment, including transformers, that was manufactured prior to July 2, 1979, and whose PCB concentration has not been established, must assume that it is PCB-Contaminated, i.e., contains 50 ppm or greater PCB, but less than 500 ppm PCB. If the date of manufacture is unknown but the dielectric fluid is known to be mineral-oil, then the owner must assume the unit to be PCB-Contaminated.

Commenters questioned the safety of sampling pole-top transformers, and noted that the design specifications for these units, as well as for pad-mounted transformers, called for mineral-oil fluid. In addition, commenters pointed out and provided data to support the fact that pad-mounted distribution

transformers rarely (typically less than 1% of the units sampled) contained PCBs greater than or equal to 500 ppm. These comments are consistent with EPA's experience that higher concentration, non-mineral-oil PCB Transformers are generally located in secure indoor locations and in indoor electrical substations and are not mounted on utility poles or outdoor pads (47 FR 37342, August 25, 1982). Therefore, pole-top and pad-mounted distribution transformers manufactured before July 2, 1979, are assumed to be PCB-Contaminated while in use unless the concentration has been established.

Section 761.2 also allows the owner or operator of oil-filled electrical equipment, including transformers, that was manufactured after July 2, 1979, and whose PCB concentration is not established, to assume that it is non-PCB, i.e., containing less than 50 ppm PCB.

In addition, § 761.2 provides that the owner or operator of a transformer manufactured prior to July 2, 1979, and filled with a fluid other than mineral oil, whose PCB concentration has not been established, must assume that it is a PCB Transformer, i.e., containing 500 or greater ppm PCB, if it contains 1.36 kg (3 lbs) or more of fluid. The assumption requirement does not apply to ''dry'' transformers, i.e., those containing no fluid. If the date of manufacture is unknown and the type of dielectric fluid in the unit is unknown, the unit must be assumed to be PCB (i.e., ≥500 ppm).

Finally, § 761.2 provides that transformers containing less than 1.36 kg of fluid, circuit breakers, reclosers, oil-filled cable, and rectifiers whose PCB concentration has not been established may be assumed to contain <50 ppm PCBs. EPA believes this policy as applied to transformers containing less than 1.36 kg of fluid poses no unreasonable risk of injury to health or the environment. Because of the widespread and diverse nature of the use of these transformers, and the small amount of PCBs contained within each one, all regulatory approaches targeted at controlling releases from them are very expensive compared to the potential quantity of PCBs kept from the environment. Thus, EPA has not identified a reasonable cost-effective regulatory alternative that would significantly reduce the risks from the remaining PCB small transformers in service. Since these transformers contain small quantities of dielectric fluid and many of them are encapsulated, PCBs are rarely released from these transformers during their use or from the equipment using the transformers. Therefore, risks of exposure to humans, food, feed, water, or the environment from their use is low. In conclusion, EPA finds that allowing the continued use of small transformers containing PCBs is not unreasonable because the risk of exposure is low and there appears to be no practical, cost-effective risk reduction measures. They may, therefore, if the concentration is unknown, be assumed to be non-PCB while in use.

The assumption policies in § 761.2 do not apply when electrical equipment is being disposed of. At that time, the owner or operator of PCB equipment must know its actual PCB concentration and use the proper disposal method.

These modifications to the final rule should significantly reduce the burden commenters identified in the proposal. Since the Agency has revised the PCB Transformer definition to include only transformers containing 1.36 kg or more of fluid, and has specified other PCB concentration assumptions for use in § 761.2, many tranformers that would have been included under the proposed PCB Transformer definition are not now included. For example, § 761.2 eliminates the need to test, while in use, any mineral oil-filled transformer manufactured after July 2, 1979, that had no information on a permanent label or mark and had not been serviced or tested previously. EPA also believes that testing costs have decreased since 1979, so commenter's assertions that the proposed changes will increase their costs are unlikely. In addition, companies have stated that they frequently determine their equipments' PCB concentration during routine servicing. Since the PCB regulations have been in place since 1978, EPA assumes that the owners and operators of most transformers have had them serviced at some point and already know their concentration. Therefore, EPA believes that most units' PCB concentration is known, and the assumption that they are PCB-Contaminated need not apply.

Those persons wishing to establish the PCB concentration of a transformer, rather than making an assumption in accordance with today's rule, may do so. PCB concentration may be established: (1) By testing the equipment; or (2) from a permanent label (i.e., a nameplate), mark or other documentation from the manufacturer of the equipment indicating its PCB concentration at the time of manufacture; and service records or other documentation indicating the PCB concentration of all fluids used in servicing the equipment since it was first manufactured.

To assist owners or operators in identifying PCB Transformers by their dielectric trade name or common name, EPA is restating a list of names used by manufacturers for PCBs, previously published in a **Federal Register** Notice (41 FR 14136, April 1, 1976, Appendix A): Aroclor, Asbestol, Askarel, Chlorextol, Clophen, Diaclor, DK, Dykanol, Elemex, Fenclor, Hyvol, Inerteen, Kennechlor, No-Flamol, Phenoclor, Pyralene, Pyranol, Saf-T-Kuhl, and Santotherm. Additional common trade names for PCBs were listed in EPA's 1994 PCB Q&A Manual: Arochlor B, ALC, Apirolio, ASK, Adkarel, Capacitor 21, Chlorinol, Chlorphen, Chlorinol, EEC-18, Eucarel, Inclor, Kenneclor, Magvar, MCS 1489, Nepolin, Nonflammable Liquid, Pydraul, Pyroclor, and Santovac 1 and 2. The above list is not all-inclusive.

To clarify what capacitors must be assumed to contain PCBs, EPA proposed to amend the definition of ''capacitor'' in § 761.3 by inserting existing language on PCB concentration assumptions from the disposal provisions. This was intended to make evident to readers that the assumption provision on capacitors applies to all provisions, such as marking, use, and recordkeeping requirements, and not just disposal.

Several commenters protested that EPA should not ''change'' its ''current'' assumption that capacitors of unknown concentration are assumed to be PCB-Contaminated (contains 50 ppm or greater PCB, but less than 500 ppm PCB). EPA wishes to clarify that the Agency has always maintained that capacitors of unknown concentration must be assumed to be PCB (500 ppm or greater). The current assumption provisions for capacitors found at § 761.60(b)(2)(i) date back to the proposed PCB disposal and marking requirements rule of May 24, 1977 (42 FR 26564). As EPA noted on August 25, 1982, in the preamble to the final rule on use in electrical equipment (47 FR 37342 at 37347), ''virtually *all* capacitors (large and small) manufactured prior to 1978 were filled with PCB fluid at a concentration *near 100 percent*. Capacitors manufactured after 1978 did not use PCB dielectric fluid.'' Data was provided to EPA in support of the 1982 electrical use rule by the Edison Electric Institute (EEI) and the Utilities Solid Waste Activities Group (USWAG). This data indicated that of approximately 2.8 million large capacitors in the utilities industry, *100%* contained PCBs at concentrations of 500 ppm or greater (47 FR 17426; at 17428).

In today's final rule, language on assumption of capacitor concentration is found at the new § 761.2(a)(4), and the existing definition of ''capacitor'' at § 761.3 is being left unchanged. The language in § 761.2 has been modified from the proposed language to make clear that capacitors manufactured after July 2, 1979, do not need to be assumed to be PCB Capacitors, rather they are assumed to be non-PCB because they were manufactured after the ban on manufacture and processing of PCBs became effective. This includes most capacitors that have been labeled by the manufacturer with the statement ''No PCBs'' in accordance with existing § 761.40(g). In addition, a definition of ''PCB Capacitor'' has been added to § 761.3 to make clear that references to PCB Capacitors in part 761 refer only to capacitors containing 500 ppm PCBs or greater. Capacitors containing 50 ppm or greater PCB, but less than 500 ppm PCB are PCB-Contaminated.

Where the concentration of equipment has not been established and is therefore assumed based on the concentration assumptions in § 761.2, that concentration also determines the marking, recordkeeping, monitoring, and other requirements applicable to the equipment while it is in use. For example, a transformer that is assumed to be a PCB Transformer under § 761.2(a)(3) is subject to the use conditions for PCB Transformers set out at § 761.30(a).

d. *Applicability based on PCB concentration.* Almost every section of the PCB regulations is based on numerical standards, usually expressed as the weight of PCBs per weight of liquid or non-liquid matrix, or as the weight of PCBs wiped off a given surface area. These regulatory levels can differ depending on whether the rules are addressing the manufacture, use, or disposal of PCBs. Commenters requested clarification regarding the determination of weights of PCBs in the regulations. In particular, the 45 kg threshold for recordkeeping at § 761.180(a) and marking at § 761.40(b) were cited. EPA is finalizing language in today's final rule at § 761.1(b)(6) to eliminate any confusion on the application of weights or volumes cited in the rule. Unless otherwise noted in the regulations, references to weights or volumes in part 761 apply to the total weight or volume of the PCB containing material (oil, soil, etc.), not the calculated weight or volume of only the PCB molecules within that substance.

PCB wastes generally are regulated for disposal under TSCA at concentrations of 50 ppm or greater. Certain exceptions exist, such as the use of waste oil containing greater than 2 ppm and less than 50 ppm PCBs for energy recovery. Wastes containing PCBs at 500 ppm PCBs or greater may have other disposal requirements, such as destruction through combustion or other approved technologies. Where a disposal requirement is specified in the PCB rules, it cannot be avoided through dilution (see § 761.1(b)(5) of the regulatory text). Other Federal, State, or local laws or regulations may impose additional, perhaps more stringent, requirements on PCB disposal.

Once something is a PCB waste, contains PCBs, or is contaminated with PCBs at regulated levels, cleanup or decontamination may be desired or required. Today's regulations establish levels and procedures for cleanup and decontamination. Anything decontaminated under these paragraphs can be processed or distributed in commerce (see § 761.20(c)(5) of the regulatory text), reused (see § 761.30(u) of the regulatory text) or disposed of in accordance with part 761, subpart D as applicable.

The self-implementing cleanup level (i.e., the ''walk-away'' level) for soil in high occupancy (e.g., residential) areas is ≤1 ppm, or ≤10 ppm if the soil is capped (see § 761.61(a)(4)(i)(A) of the regulatory text). The cleanup level in low occupancy (e.g., electrical substation) areas is ≤25 ppm to ≤100 ppm, depending on site conditions (see § 761.61(a)(4)(i)(B)(*1*) of the regulatory text). The codified text uses parts per million (ppm) for concentration measurement of non-liquids as an equivalent to milligrams per kilogram (mg/kg).

Decontamination standards for surfaces are as follows: for non-porous surfaces in contact with liquid PCBs destined for reuse, ≤10 micrograms PCBs per 100 square centimeters (μg PCBs/100 cm^2) (see § 761.79(b)(3)(i) of the regulatory text); for non-porous surfaces in contact with liquid PCBs destined for smelting, ≤100 μg PCBs/100 cm^2 (see § 761.79(b)(3)(ii) of the regulatory text); for non-porous surfaces in contact with non-liquid PCBs destined for reuse, Visual standard No. 2, Near-White Blast Cleaned Surface Finish, of the National Association of Corrosion Engineers (NACE) (see § 761.79(b)(3)(i) of the regulatory text); for non-porous surfaces in contact with non-liquid PCBs destined for smelting, Visual standard No. 3, Commercial Blast Cleaned Surface Finish, of NACE (see § 761.79(b)(3)(ii); and for fresh spills to concrete, ≤10 μg PCBs/100 cm^2 (see § 761.79(b)(4) of the regulatory text).

Decontamination standards for liquids are as follows: for water, ≤0.5 μg PCBs/L (approximately 0.5 ppb) for unrestricted use (see § 761.79(b)(1)); and for organic and non-aqueous inorganic liquids, ≤2 mg PCBs/L (approximately 2 ppm) (see § 761.79(b)(2) of the regulatory text). The codified text uses ppm or milligrams per liter (mg/L) for concentration measurements of non-aqueous liquids and parts per billion (ppb) or micrograms per liter (μg/L) for concentrations of aqueous liquids.

The part 761 regulations do not address or preempt the regulation of non-PCB components of a waste. If the PCB component of a waste is approved for disposal at a facility, the approval for the disposal of the other regulated waste components must be addressed by all other applicable statutes or regulatory authorities. As an example, while non-liquid PCB/radioactive waste less than 50 ppm PCBs that is not the result of dilution is not regulated for disposal under TSCA, this waste would need to be disposed of in accordance with all applicable requirements for the management and disposal of the radioactive component of the waste. Disposers should be advised that site-specific permit or license conditions or local requirements may preclude such disposal. Similarly, under § 761.79(g)(2), hydrocarbon decontamination liquids having PCB concentrations less than 50 ppm may be burned and marketed in accordance with the requirements for used oil in § 761.20(e). Where such liquids had a radioactive component, burning and marketing would have to be carried out in accordance with all applicable Federal, State and local requirements for the management and disposal of the radioactive component of the waste.

In general, PCBs are banned for use unless specifically authorized. Authorizations may specify conditions for use such as marking, labeling, or recordkeeping, and can establish the level of regulatory control depending on such considerations as the type or location of use or potential for exposure (see § 761.30 of the regulatory text).

When a product is manufactured, the potential exists for it to be contaminated with PCBs as a by-product during manufacture, through contaminated feedstock, or through the addition of PCBs from another source. As a result, the product assumes the same regulatory status as the source (see § 761.1(b)(5)). In general, minimum regulatory levels for PCBs under section 6(e) of TSCA, including PCBs in manufactured items or products, are the same as the minimum regulatory levels listed above. When something is imported into the Customs Territory of the United States for use, TSCA defines

that importation as manufacture (see TSCA section 3). All imports of PCBs are banned absent a TSCA section 6(e)(3)(B) exemption, unless the import satisfies the requirement at § 761.20(b). See Unit IV.J. of this preamble. The use of PCBs or ''disposal'' of PCB wastes in a manufacturing process for a new product is not authorized.

2. *Definitions—additions and modifications*. This discussion is limited to a few of the definitions included in § 761.3. EPA also has added definitions for acronyms frequently used in part 761 (e.g., ASTM, CERCLA, DOT, RCRA, TSCA and U.S. GOP). The remaining definitions being incorporated at § 761.3 in this rulemaking are discussed in other sections of this preamble.

a. *PCB-Contaminated Electrical Equipment*. EPA proposed to clarify the current definition of ''PCB-Contaminated Electrical Equipment'' (specifically as it relates to PCB-Contaminated Transformers at § 761.3), by incorporating the ''assumption rule'' which was included in the PCB Ban rule preamble (44 FR 31517, May 31, 1979). This change would have been effected by adding the following language to the definition: ''a transformer is assumed to contain PCBs at 500 ppm or greater, if it is an untested mineral oil transformer and reasons exist to believe that the transformer was at any time serviced with fluid containing PCBs at 500 ppm or greater.''

In today's final rule, EPA codified the assumptions for PCB-Contaminated Electrical Equipment in new § 761.2 rather than in the definition of that term at § 761.3. Section 761.2 provides that mineral oil-filled electrical equipment (other than circuit breakers, reclosers, oil-filled cable, and rectifiers) that was manufactured before July 2, 1979, and whose PCB concentration is not established, must be assumed to be PCB-Contaminated Electrical Equipment, i.e., containing 50 ppm or greater PCB, but less than 500 ppm PCB. PCB concentration may be established either by testing the equipment; or by a permanent mark or other documentation from the equipment's manufacturer indicating its PCB concentration at the time of manufacture, and service records or other documentation indicating the PCB concentration of all fluids used in servicing the equipment since it was manufactured.

The final rule also clarified that the definition includes equipment with a surface concentration of greater than 10 µg PCBs/100 cm^2 to less than 100 µg/100 cm^2. Many commenters expressed confusion over EPA's intent in adding surface sampling to the definition of PCB-Contaminated Electrical Equipment. EPA's intent is to provide a way to handle equipment in the absence of liquids or when non-liquids were present. Surface sampling is not required in addition to sampling that is conducted when liquids are present.

b. *Non-porous surface*. EPA proposed to define ''non-porous surface'' as ''a smooth, unpainted solid surface that limits penetration of liquid PCBs beyond the immediate surface.''

Several commenters asked that concrete be included in the definition of ''non-porous surface.'' Data were provided in a comment to demonstrate that concrete was less porous than granite and marble. However, the data clearly indicate that the porosity of concrete can vary widely depending on its constituents and preparation. The PCB remediation waste provision addresses existing concrete, where it is doubtful that porosity testing or formulation details could be provided to make a verifiable comparison to the natural stone materials.

Some concerns raised by commenters who sought relief for cleanup of concrete are addressed in new § 761.30(p), which allows continued use of contaminated concrete under specified conditions. The authorization, however, requires disposal of the concrete at the end of its useful life, based on the bulk concentration of PCBs in the concrete, and not on surface concentration.

EPA clarifies the distinction between porosity with respect to risk for two different generic scenarios: (1) Materials used as a conduit to divert, or as a barrier to prevent precipitation or its runoff, from further transporting previously released PCBs; and (2) materials which have been subjected over time to a continuous or single release of PCBs which have not been contained or removed, but have been allowed to migrate.

In the first scenario, a concrete cap can prevent migration of water deposited on the surface. Such a cap diverts the water from passing through the concrete, preventing PCB movement in PCB remediation waste beneath the cap. In this sense the concrete is non-porous to the water. Concrete also can be ''non-porous'' when used for containment as a floor for a storage facility, because any release to the upper surface of the floor would not be allowed to persist and migrate but would be quickly cleaned up and/or recontained.

For the second scenario, concrete is porous to continued slow releases of dielectric or hydraulic fluid. Historically, this kind of release would not always have been controlled or cleaned up. Some of these releases have penetrated over 30 centimeters of concrete and have continued to migrate in soil under the concrete pad or floor for several meters. Floors and pads for most of these situations were not built to contain spills or prevent migration of fluids, but were constructed for structural support, where porosity was not a performance specification or requirement. When fluids have penetrated concrete for a long period, surface cleaning is inappropriate to remove PCBs that have migrated under the surface, and will most likely be unsuccessful. However, surface sampling may help estimate the extent of surface migration of an old or continuous release of PCB fluids onto concrete.

c. *PCB Capacitor*. EPA added this definition to clarify that the term PCB Capacitor in part 761 refers to capacitors containing 500 ppm PCBs and greater (as opposed to 50 or greater ppm). Any capacitors containing 50 ppm or greater PCB, but less than 500 ppm PCB are PCB-Contaminated. EPA is retaining the existing definition of capacitor.

d. *SW-846*. EPA provided an abbreviated name for the series of chemical procedures entitled ''SW-846, Test Methods for Evaluating Solid Waste,'' often referenced in the regulation.

3. *References*. In the NPRM, EPA described the availability of test standards developed by the American Society for Testing and Materials (ASTM) which have been incorporated by reference in 40 CFR part 761. Copies of the incorporated ASTM standards are available for inspection at the Office of the Federal Register and the TSCA Nonconfidential Information Center, or copies may be obtained directly from the ASTM in Philadelphia, PA.

Commenters wanted EPA to include the full text of these incorporated test methods in the regulations. The justifications for this recommendation included simplicity (i.e., access to requirements from a single source), costs of acquiring ASTM standards, and burdensome paperwork and delays associated with requesting the documents. EPA estimates that roughly 40 pages of text would be added to the Code of Federal Regulations (CFR) if the referenced standards were included in the PCB regulations text, at an annual estimated cost to EPA of $2,500, compared to the individual investment by affected entities of less than $300 for the 16 applicable standards. There are, however, more compelling reasons for not including the text of these standards in the regulations: (1) The

Administration's streamlining initiatives to reduce the number of pages of regulatory text in the CFR, (2) copyright restrictions, and (3) the availability of these documents through other sources. For these reasons, EPA has promulgated § 761.19 as proposed.

B. Manufacturing, Processing, Distribution in Commerce, and Use

1. *Prohibitions and exceptions*—a. *Processing for disposal*. Existing § 761.20(c)(2) states that PCBs ''may be processed . . . in compliance with the requirements of this part for purposes of disposal in accordance with the requirements of § 761.60.'' Today's final rule clarifies which processing for disposal requires an approval and which does not. Processing for disposal must not result in dilution to avoid disposal requirements.

The provisions at § 761.20(c)(2) in today's rule essentially addresses the following situations:

Processing for disposal activities which are primarily associated with and facilitate storage or transportation for disposal are disposal, but do not require a TSCA PCB disposal approval. Examples include, but are not limited to: removing PCBs from service (e.g., draining liquids); pumping liquids out of temporary storage containers or articles into drums or tank trucks for transportation to a storage facility or disposal facility; dismantling or disassembling serviceable equipment pieces and components; packaging or repackaging PCBs for transportation for disposal; or combining materials from smaller containers.

Processing for disposal activities which are primarily associated with and facilitate treatment, as defined in 40 CFR 261.10, or land disposal, require an approval unless they are part of an existing approval or a self-implementing activity (such as activities allowed under § 761.61(a) and § 761.79), or are otherwise specifically allowed under part 761, subpart D. Examples include, but are not limited to, microencapsulation; pulverization; particle size separation; employing augers or hoppers to facilitate feeding non-liquid PCBs into a disposal unit; directly piping liquid PCBs into a disposal unit from PCB Items, storage containers or bulk transport vehicles; and directly introducing non-liquid PCBs from containers, bulk transport vehicles or on pallets into a disposal unit, such as an incinerator, a high efficiency boiler, industrial furnace, alternate destruction method, or chemical waste landfill.

Processing, diluting, or otherwise blending waste (prior to introducing it into a disposal unit) for purposes of meeting a PCB concentration limit in a disposal approval shall be done in accordance with the approval, or shall comply with § 761.79 or § 761.60(a)(2) or (3).

The rate of delivering liquids or non-liquids into a PCB disposal unit shall be part of the conditions of the PCB disposal approval for the unit when an approval is required.

Commenters sought to include various forms of processing for disposal outside of a disposal approval because they felt that these activities are common industrial waste management practices. EPA finds that there are two kinds of processing for disposal activities which potentially could change the disposal status of waste through processing: (1) Dilution by blending down the PCB concentration of the waste (any kind of processing which mixes waste with other waste or non-waste lowers the concentration of the highest PCB concentration waste component(s)); and (2) complete or partial separation, such as particle size separation, of waste components. These kinds of processing must be included in an approval to assure that all regulated materials are disposed of in accordance with the disposal regulations.

b. *Sewage sludge*. Today's rule revises § 761.20(a)(4) to harmonize the TSCA regulations on use or disposal of sewage sludge containing PCBs with similar regulations promulgated under the Clean Water Act. For sewage sludge regulated under TSCA for use or disposal, blending of the sewage sludge to avoid TSCA disposal requirements is prohibited.

EPA also revised the definition of ''PCB remediation waste'' to respond to comments that by including in that definition municipal sewage treatment sludges at any concentration, EPA's proposal would supersede CWA sewage sludge regulations. EPA did not intend to do so. The definition of ''PCB remediation waste'' in the final rule excludes sewage sludge at less than 50 ppm in use under § 761.20(a)(4), and includes ''PCB sewage sludge'' as defined at 40 CFR 503.9(w) containing ≥50 ppm PCBs. However, some use and disposal activities not clearly covered by the CWA regulations are banned by TSCA even for sewage sludge containing less than 50 ppm PCBs, for example the intentional or accidental dilution of PCB wastes by mixing or blending with sewage sludge. All sewage sludge containing ≥50 ppm PCBs still falls under the definition of PCB remediation waste.

2. *Distribution in commerce after decontamination*. EPA is finalizing a conforming amendment to existing § 761.20(c)(5), which consolidates provisions proposed at § 761.20(c)(5), (c)(6), and (c)(7). The Agency is aware that during manufacture, use, and servicing of PCBs, PCB Items and other goods, PCB contamination can occur. The Agency believes that liquids and non-liquids may be used, distributed in commerce, or disposed of after contaminating PCBs have been removed or reduced in concentration as specified without posing an unreasonable risk of injury to health or the environment.

In § 761.20(c)(5) of the regulatory text, EPA is clarifying that equipment, structures, or liquid or non-liquid materials that were contaminated with PCBs ≥50 ppm may be distributed in commerce when certain conditions are met. These conditions include decontamination in accordance with: (1) A TSCA PCB disposal approval; (2) applicable decontamination standards and procedures under § 761.79; (3) applicable EPA PCB spill cleanup policies (e.g., TSCA, CERCLA, regional) at the time of decontamination; or (4) if the materials were not formerly decontaminated but now meet an applicable decontamination standard in § 761.79. Similar conditions for the use or reuse of decontaminated materials are addressed in § 761.30(u).

3. *Authorizations*—a. *Registration requirements for PCB Transformers*. To qualify for the current use authorization, all PCB Transformers were required to have been registered with local fire response personnel by December 1, 1985 (see existing § 761.30(a)(1)(vi), the fires rule). In addition, when the transformers are in use in or near commercial buildings, current regulations require them to be registered with the building owners (see existing § 761.30(a)(1)(vii)). Owners of transformers at industrial sites could fulfill the current requirement by registering with their on-site fire brigade, while owners of PCB Transformers in or near commercial buildings had to register with both the local fire department and the building owner. PCB Transformers erroneously assumed to have been contaminated at less than 500 ppm PCBs are required to be registered within 30 days of discovery of the actual contamination level (see existing § 761.30(a)(1)(xv)(D)). If the transformer owner could not demonstrate (e.g., by the production of the signed receipt from a registered or certified letter used to register the transformer with the fire response

personnel) that this registration had taken place, then that PCB Transformer was not authorized for use under § 761.30.

A review of the regulated community's compliance with these registration requirements by the Office of the Inspector General of EPA and EPA Regional personnel found that many fire departments, including those serving large cities, had not received registration information for a large percentage of those PCB Transformers which should have been registered. In addition, many owners could not demonstrate that they had registered their transformers as required in order to continue each unit's authorization for use (Ref. 7).

Pursuant to section 18(b) of TSCA, the State of Connecticut petitioned EPA for an exemption from the preemption provisions of section 18(a)(2) to allow the State to require, among other things, the registration of PCB Transformers (i.e., transformers with dielectric fluid at ≥500 ppm PCB) with the Connecticut Department of Environmental Protection (Ref. 8). Connecticut argued that this registration would provide a significantly higher degree of protection for State residents and emergency response personnel from the risks posed by PCB Transformers than the current Federal rules under TSCA because: (1) State emergency response personnel need the information because they often respond to fires and spills at sites throughout the State, and (2) the State, if it had the information, could more quickly issue warnings regarding fishing, swimming, or other activities that could increase human exposure to PCBs when fires or spills occur.

While EPA sees merit in these arguments, EPA believes that residents of every State would be better protected by a uniform, nationwide registration requirement, in which EPA would receive the data and make it available to Federal, State, and local emergency or fire response personnel and to building owners.

Therefore, in response to the State of Connecticut's Petition and the Inspector General's report documenting a lack of compliance with the existing regulation, EPA proposed to amend § 761.30(a)(1)(vii) to require all owners of PCB Transformers to register their transformers with EPA, no later than 90 days after the effective date of the final rule. EPA proposed this as a one-time registration requirement. However, under the proposed rule, owners of transformers that were subsequently identified as PCB Transformers or received from another location would have to register those transformers with EPA no later than 30 days after they identified or received the transformer. To minimize data gathering and processing, EPA proposed that transformer owners would only have to report the following information currently required under § 761.180(a) to be included on their annual document logs: (1) Transformer location (address) and number of PCB Transformers, (2) the total weight in kilograms of PCBs contained in the PCB Transformers, and (3) name, address, telephone number, and signature of the owner, operator, or other authorized representative certifying the accuracy of the information submitted. EPA proposed that if a PCB Transformer is transferred to a different location after it is registered, information concerning that transfer would be recorded in the former owner's annual document log. EPA has authority to collect registration information on transformers under section 8 of TSCA, 15 U.S.C. 2607.

Many commenters felt that instead of a new registration program, EPA should enforce its existing requirements. Although EPA agrees that effective enforcement of its regulations is important, EPA believes that the national registration program provides benefits that merely improving the enforcement of the existing fire rules cannot provide. For example, collecting the information nationally, in one data base, provides transformer location information to all emergency responders, whether they are from the local volunteer fire department, from the State (as Connecticut described in its petition), or from the Federal government.

In addition, the new registration program is designed to cure features of the existing rule that impede enforcement. For instance, the existing rule does not require transformer owners to maintain records documenting that they complied with the rule. An inspector who is not sure, based on the evidence available at an inspection, whether or not registration with the fire department occurred, must determine which fire department is the primary responder for that facility and impose on it to determine if registration, in fact, occurred. The new rule requires the transformer owner to maintain, with the annual log, proof that registration occurred. If that documentation is absent, not only is there a violation, but the inspector will easily be able to double check the national data base to determine if the registration in fact occurred.

Some commenters asked whether they could comply with the national transformer registration program by sending EPA a copy of the information that they previously sent to the primary fire response jurisdiction under the fires rule. EPA agrees that this is an appropriate method of complying with the national transformer registration program, as long as the submission contains all the information required under the new regulations, and that information has not changed since being submitted to the local fire department. Information required by the new regulations, but not by the prior fires rule, can be submitted to the Agency in a cover letter on company stationery. See below for a further discussion of the format of the required information.

Some commenters questioned how the Agency intended to manage the data it received pursuant to the national transformer registration program. The Agency intends to provide the information to state fire bureaus and other umbrella organizations for further dissemination to local fire departments. In addition, the Agency intends eventually to make the information available in an electronic data base, probably on EPA's World Wide Web Home Page. The Agency believes that the Internet has become a valuable and reliable tool in disseminating information, a situation that did not exist when the fires rule was originally promulgated in 1985.

One commenter suggested that if the purpose of the registration is the protection of emergency responders, such responders should be trained to assume that all transformers contain PCBs and act accordingly. EPA agrees that such training would be appropriate for all emergency responders, and has anecdotal evidence that some receive such training. However, EPA, in the absence of other evidence, cannot assume that all local and state emergency response personnel that may respond to a fire are so trained. Therefore, EPA believes that establishing a national data base of PCB Transformers will serve to protect all emergency responders, not just those trained to assume that all transformers contain PCBs, from the dangers of PCBs in fires.

Several commenters suggested that there is no showing of risk to justify the transformer registration program. EPA disagrees. EPA determined, in 1985, that a risk to fire response personnel existed such that the fires rule was necessary (50 FR 29170, 29174, July 17, 1985). The Agency has not received sufficient information to indicate that such a risk has abated. Therefore, the Agency believes that it is still necessary to have PCB Transformer location information available to local fire response

personnel. As discussed above, EPA believes that a national registration program will address this risk by making the information available on demand to the local fire response personnel, and will provide additional protection by making it available to others, such as state emergency response personnel, that may respond to fires. In addition, changes to the rule that will make it easier to enforce, such as requiring that proof of registration be kept with the annual log, should assist in abating the risk from fires involving PCBs by increasing the rate of compliance, therefore providing emergency response personnel with information about more PCB Transformers.

Several commenters also suggested that the creation of a new registration requirement would be duplicative of the requirements in place under section 312 of the Emergency Planning and Community Right-to-Know Act (EPCRA), 42 U.S.C. 11001 to 11050, and at existing § 761.30(a)(1)(vi) and (a)(1)(vii). While EPA agrees that some duplication may exist, the amount of duplication is not sufficient to justify a decision not to finalize the transformer registration requirement. Moreover, the EPCRA reporting requirements have quantity or jurisdictional triggers that do not satisfy the information needed for the PCB Transformer registration program. For example, EPCRA section 304 requires that releases of certain chemicals be reported. EPA believes that it is important that emergency response personnel have information about the locations of PCB Transformers prior to releases, so that they can plan, in advance, how to respond to such releases. Sections 311 and 312 of EPCRA do require reporting, for planning purposes, to various emergency response personnel for hazardous chemicals that are present at the facility at 10,000 pounds or greater, and for extremely hazardous substances at less than 500 pounds. EPA intends this registration requirement to apply to anyone owning a PCB Transformer, as defined in the regulations, with no provision to exempt those people whose PCB Transformers do not contain, in total, 10,000 pounds or more of PCBs.

Since EPA proposed the transformer registration program in 1994, PCBs have taken on increasing importance in international negotiations regarding hazardous substances. For example, negotiations are ongoing to develop a legally binding Protocol on Persistent Organic Pollutants under the United Nations Economic Commission for Europe's Convention on Long Range Transboundary Air Pollution. In those negotiations, several European countries support a mandatory ban on PCB use to comply with a European Community Directive banning PCB use by 2010. However, having a national data base of the amounts of PCBs in transformers (the largest single source of liquid PCBs) will allow EPA to evaluate more accurately the impact of such proposals on the American economy.

EPA also requested comments on the State of Connecticut petition. In the proposal, EPA indicated that if it did not promulgate a uniform national registration requirement, then it would be inclined to promulgate an exemption under section 18(b) to allow any State to implement its own registration requirements for transformers. Commenters overwhelmingly opposed a State registration program, citing the requirement as redundant, burdensome, and a potential misuse of preemption. EPA agrees with the commenters and is not adopting the State registration requirement in this rulemaking.

Today, as a condition of the authorization for continued use, EPA is finalizing a national registration requirement for PCB Transformers at § 761.30(a)(1)(vi). This new registration requirement extends to PCB Transformers in use or in storage for reuse, even if a specific PCB Transformer was registered under the old requirements at § 761.30(a)(1)(vi). However, a person who takes possession of a PCB-Transformer after the deadline for the original registration has passed does not need to register that transformer with the EPA. Any person taking possession of a transferred PCB Transformer should assure that it was registered under the requirement of § 761.30(a)(1)(vi). PCB Transformers that are not registered are not authorized for use and must be disposed of.

In general, a person who assumes that a transformer is a PCB-Contaminated Transformer, and then discovers that it is a PCB Transformer, must register that transformer with the EPA within 30 days of discovering that it is a PCB Transformer. However, this requirement only applies if the transformer is located at an address where no other PCB Transformers are located. If other PCB Transformers are located at the same address, and those PCB Transformers are registered with EPA, the owner of the newly-identified PCB Transformer is not required to register that transformer with the EPA.

Under § 761.30(a)(1)(vi)(D), the registration requirement will be a part of the authorization for continued use for each PCB Transformer. To remove duplicate reporting, EPA is also deleting the existing requirements to register PCB Transformers with the fire department. Since this registration will be sent to EPA Headquarters, it enhances the current registration requirement by providing a central point for information collection and dissemination. However, based on comments requesting a longer period of time in which to register transformers, EPA is extending the date to have PCB Transformers registered from 90 days to 120 days from the effective date of today's rule.

The information required for this registration now includes the following: (1) Company name and address, (2) contact name and telephone number, (3) location of transformer(s) (address, or for a mobile source like a ship, the name of the ship), (4) number of PCB Transformers and the total weight of the transformers in kilograms, (5) whether any transformers at this location contain flammable dielectric fluid (optional), and (6) signature of the owner, operator, or other representative authorized to certify the accuracy of the information submitted. EPA Form No. 7720-12, provided at Unit V. of this preamble, has been submitted to OMB for review. Once OMB clears the form, it may be used for the uniform submission of registration information, but its use will be optional. In lieu of the form EPA will accept the registration information on company stationery. Where a company has multiple locations, EPA will accept one form or cover letter which provides information pertaining to the company (including a point of contact), followed by attachments that provide information (per § 761.30(a)(1)(vi)) specific to each location. Finally, anyone who no longer possesses any PCB Transformers and would like to be removed from the data base can notify EPA in writing. Notification to remove a company or location from the data base is strictly voluntary.

b. *Remove outdated material.* EPA proposed to remove provisions of 40 CFR part 761 that have become outdated due to the passage of time. All of the affected provisions were in subpart B (i.e., prohibitions and authorizations). EPA received very few comments on its proposal; no opposing comments were received regarding the proposed changes at § 761.30(b), (c), (d), and (e). EPA received a comment that § 761.30(g), which authorizes the use in other than a totally enclosed manner of 50 ppm or greater PCBs in diarylide and phthalocyanin pigments until January 1, 1982, is obsolete. This provision further restricted the processing and distribution in commerce of these pigments with PCB concentrations of 50 ppm or greater after July 1, 1979, and

their limited manufacture after July 2, 1979, to those individuals who are granted exemptions from EPA. EPA agrees with the commenter. The manufacture, processing, and distribution of products containing inadvertently generated PCBs at concentrations of less than 50 ppm are currently regulated by provisions found at §§ 761.1(f), 761.3, 761.185, 761.187, and 761.193. In today's final rule, EPA is deleting the authorization currently found at § 761.30(g) and is finalizing the proposed revisions to the authorizations at § 761.30(b), (c), (d), (e), and (h).

One commenter identified a drafting error in § 761.30(h) regarding the use conditions for electromagnets, switches, and voltage regulators which incorrectly directed individuals to inspection requirements at § 761.30(a)(1)(iii) and (a)(1)(iv). Since the use of electromagnets at concentrations of 500 ppm or greater was prohibited in areas which pose an exposure risk to food or feed after October 1, 1985, EPA is also deleting the visual inspection requirement currently found at § 761.30(h)(1)(ii). A revised (h)(1)(ii) has been included (see the discussion on voltage regulators) which changes the incorrect references to read ''§ 761.30(a)(1)(ix), (a)(1)(xiii), and (a)(i)(xiv)'' where such an inspection is now required.

EPA also proposed to remove the § 761.20(c)(3) provisions requiring submission of a notice to EPA prior to exporting PCBs or PCB Items for disposal. This proposal is not being finalized at this time. As explained in Unit IV.J. of this preamble, EPA is deferring its rulemaking on export until a later time.

c. *Voltage regulators*. Current § 761.30(a)(1)(xv) requires owners of mineral oil transformers that had been assumed to contain 50 ppm or greater PCB, but less than 500 ppm PCB, but are tested and found to contain 500 ppm or greater PCBs, to bring those units into compliance with part 761. EPA proposed the same requirements for voltage regulators (see proposed § 761.30(a)(1)(xvi)). Voltage regulators which were marked or otherwise known to contain PCBs at 500 ppm or greater would also be required to come into compliance with part 761. Under existing rules, mineral oil-filled electrical equipment (including voltage regulators) that was manufactured before July 2, 1979, and whose PCB concentration is not established is assumed to be PCB-Contaminated Electrical Equipment (i.e., contains ≥50 ppm PCB, but <500 ppm PCB).

Due to the risks associated with higher concentration PCBs, the final rule requires that voltage regulators that contain 3 pounds or more of dielectric fluid containing 500 ppm or greater PCBs must be properly marked while in service, their locations must be marked, fire-related incidents must be reported, regular inspections must be conducted, records must be kept pursuant to § 761.180, and they must be properly disposed of when they are taken out of service. These are essentially the requirements that currently apply to PCB Transformers. EPA believes the same requirements are appropriate for voltage regulators containing ≥500 ppm PCBs based on the similarity between the functions of and risks posed by the two types of equipment. Small voltage regulators (less than three pounds of PCB dielectric fluid) are subject to the disposal provisions of § 761.60, but not the use provisions mentioned above.

EPA solicited comments on the appropriateness of requiring enhanced electrical protection for voltage regulators as is the case for mineral oil transformers known or found to contain greater than or equal to 500 ppm PCBs. Commenters indicated that enhanced electrical protection cannot be installed on voltage regulators. Therefore, EPA will not require this.

In addition, EPA solicited comments on whether voltage regulators should be added to existing § 761.30(a)(1)(xv) with transformers, or placed in a separate paragraph. In response to comments, EPA added the amendments to § 761.30(h)(1), which currently addresses voltage regulators.

EPA received suggestions that it should apply the voltage regulator requirements to all mineral oil (assumed to be < 500 ppm PCBs) electrical equipment found to be greater than or equal to 500 ppm. None provided data, however, to indicate the types of unregulated electrical equipment that may contain greater than or equal to 500 ppm PCBs. As explained in the NPRM, EPA has data indicating that approximately 2% of voltage regulators contain PCBs greater than or equal to 500 ppm. Due to the lack of data on other mineral oil electrical equipment that may contain PCBs greater than or equal to 500 ppm, EPA is not applying this standard to other mineral oil filled electrical equipment.

Commenters also pointed out that many voltage regulators contain an internal PCB-containing capacitor that may rupture or leak. They felt that it was important to remove this capacitor if one was conducting a retrofill prior to reclassification to avoid fluid leaking from the capacitor and contaminating the replacement fluid. EPA agrees that this is a prudent practice and highly recommends, although is not requiring, that if such a capacitor is found in the voltage regulator, it be removed and replaced with one that is non-PCB.

d. *Natural gas pipeline systems*. EPA has worked for several years to address PCB contamination in natural gas pipelines and associated equipment, such as air compressors. The reasons for the presence and movement of PCBs in gas pipelines are not well understood, but it may have occurred through use of PCB-containing lubricating oils in compressors, fogging of pipeline systems with PCB-containing oil vapor, and PCB migration from contaminated natural gas pipeline systems. PCBs primarily move with the condensate liquids that form in the pipelines. Some natural gas pipeline systems still contain PCBs in liquid condensate despite repeated attempts to rid the systems of PCBs. (See, for example, comments of Interstate Natural Gas Association of America, May 1, 1995, C1-134).

In response to these contamination issues, EPA initiated a compliance monitoring program for companies with >50 ppm PCBs in their pipelines, where EPA presumed that any pipeline showing PCB contamination >50 ppm was contaminated along its whole length. As a result, EPA has used various administrative mechanisms to declassify or decontaminate pipeline and pipeline system components.

In the NPRM, EPA proposed changes to the use authorization for natural gas pipelines and related appurtenances which are contaminated with 50 ppm or greater PCBs. EPA requested comment on additional changes to § 761.30(i) at the June 6-7, 1995 public hearing. EPA proposed to define ''natural gas pipeline systems'' to include not only natural gas pipe and appurtenances but also natural gas compressor systems (see 59 FR 62855). EPA excluded air compressors and appurtenances and proposed a separate definition for ''compressed air systems.'' EPA proposed to expand the use authorization in § 761.30(i) to include natural gas pipeline systems contaminated with 50 ppm or more PCBs, provided the owner or operator of the pipeline notified EPA of the contamination, characterized its extent, sampled and analyzed potential sources of contamination, took remedial measures such as removing the contamination sources or reducing the PCB concentration to <50 ppm, and documenting these actions. The proposed regulations also gave EPA flexibility to adjust these requirements based on the unique needs or history of particular pipeline systems and past Federal, State or local regulatory

actions. EPA also proposed that PCB-Contaminated pipelines and appurtenances which had been drained of all free-flowing liquids could be reused in any natural gas pipeline system or distributed in commerce for other specific uses (e.g., transport of bulk hydrocarbons, chemicals, or petroleum products).

The natural gas pipeline industry strongly supported revising the use and reuse authorizations while offering specific comments regarding cost effective and flexible approaches to regulating their industry. EPA has responded to as many of these concerns as possible while ensuring that the natural gas pipeline industry continues to actively reduce PCB concentrations below 50 ppm in natural gas pipeline systems. Today's rule does not allow the introduction of PCBs into natural gas pipeline systems; instead it authorizes the use and reuse of natural gas pipeline systems that were contaminated with PCBs in the past, provided certain actions are taken. Unless use of the system was authorized, the system would have to cease operation until the PCBs were removed, burdening the public by making fuel more costly or unavailable. EPA believes this burden would outweigh the risk posed by allowing continued use of the system, so long as the PCBs are contained in the system, are regularly removed in the condensate, and, when removed, are stored and disposed of in accordance with these regulations.

Today's final rule broadens the proposed definition of ''natural gas pipeline systems'' to include natural gas gathering facilities, natural gas pipe and pipeline appurtenances, natural gas compressors, and natural gas storage facilities. Both interstate and local distribution natural gas pipeline systems are covered under today's rule. Additionally, air compressors are not included as a part of natural gas pipeline systems because their use is not unique to the natural gas pipeline industry. Air compressor systems are now defined separately in § 761.3 and their use is authorized under specific conditions in § 761.30(t).

The use authorization promulgated today in § 761.30(i) for natural gas pipeline systems is modified slightly from the NPRM in response to comments requesting more realistic time frames and flexibility (e.g., allowing the use of historical data to satisfy requirements for notification to EPA, sampling and analysis, or decontamination). The rule now authorizes the continued use of PCBs in natural gas pipeline systems at <50 ppm. The rule also authorizes the continued use of PCBs at concentrations ≥50 ppm in natural gas pipeline systems not owned or operated by a seller or distributor of natural gas; owners or operators of these systems have no obligations under § 761.30(i). For systems which are owned or operated by a seller or distributor of natural gas, continued use is authorized at concentrations ≥50 ppm if steps are taken to identify and reduce PCBs to <50 ppm in demonstrated sources of PCBs within the natural gas pipeline system. EPA has also extended the time frames under § 761.30(i). With respect to the § 761.30(i)(1)(iii)(A)(*2*) sampling requirement, EPA agrees with a commenter's suggestion that the 120–day period begin with the effective date of today's rule where pipeline owners are aware of existing PCB contamination.

Commenters noted that they could not be responsible for addressing sources of PCB contamination which resulted from companies outside their control. Any natural gas pipeline systems which do not include potential sources of PCB contamination, such as scrubbers, compressors, or filters containing PCB concentrations of 50 ppm or greater, are generally exempt from the requirements for identifying, characterizing, and reducing sources of PCBs, provided documentation regarding this is maintained. For example, the owner/operator of a local natural gas distribution system meeting these conditions would need to document that the most likely source of PCB contamination was the natural gas pipeline system that supplied their natural gas. However, any natural gas pipe or liquids which are contaminated with PCBs are subject at removal to the applicable disposal, decontamination, or reuse provisions, to reduce the PCB contamination levels in the system. Some commenters were concerned that natural gas end users, such as homeowners and businesses, would be covered by the regulations. Because end users are excluded from the definition of natural gas pipeline system in § 761.3, they are not subject to the requirements of § 761.30(i).

EPA is dropping the § 761.45(a) marking requirement for natural gas pipeline contaminated with PCBs at <50 ppm which was formerly required at § 761.30(i). Commenters stated that marking underground pipe is unworkable and unnecessary for <50 ppm PCBs. EPA, however, is requiring that aboveground pipeline system components containing PCB liquids at ≥50 ppm bear the M_L Mark in accordance with § 761.45(a) because of potential exposure to PCB liquids. (See § 761.30(i)(1)(iii)(A)(*6*) of the regulatory text). Thus, the marking requirements apply to equipment such as compressors, valves, drips or other pipeline components that are aboveground, are used to contain or collect PCB liquids, and where historical data or recent sampling data indicate PCBs at ≥50 ppm. EPA also solicited comments in the NPRM on whether it should require marking of individual natural gas pipe temporarily stored for testing prior to disposal (59 FR 62855). Commenters opposed this as too burdensome and unnecessary when the storage area is marked. EPA agrees and is not requiring marking of individual pipe in temporary storage areas.

Today's rule incorporates proposed reuse options in certain low exposure uses for PCB-Contaminated (50-<500 ppm) natural gas pipelines that have been drained of all free-flowing liquids (see § 761.30(i)(2) and (i)(3)). The basis for these options was EPA's risk assessment for natural gas pipe (Ref. 9). Some commenters requested that EPA further expand the use authorization to allow drained natural gas pipe to be melted or smelted for metal recovery. They claimed that the proposal, which required PCB-Contaminated pipe to be burned in industrial furnaces, was too restrictive (see proposed § 761.60(a)(4), finalized as § 761.72). They stated that steel melting furnaces would not accept natural gas pipe under these conditions, thereby eliminating a cost-effective and safe reuse for their pipe. EPA is addressing pipe smelting as disposal under § 761.72 (see Unit IV.E. of this preamble).

Commenters also requested use and reuse authorizations for pipelines that were presumed to contain >500 ppm PCBs due to EPA's assumption policy or historical sampling indicating such contamination. Without this authorization, commenters were concerned that legitimate reuses of contaminated natural gas pipeline and appurtenances within existing pipeline systems or for other purposes would be precluded.

The final use and reuse authorization for PCBs in natural gas pipeline systems envisions a declining PCB concentration over time to below 50 ppm. Under the new § 761.30(i)(4), EPA is allowing the characterization of natural gas pipeline liquids, components, and segments based on the actual PCB concentrations at removal, rather than former presumptions or historical data. Liquids may be collected at existing condensate collection points in the pipe or pipeline system. The level of PCB contamination found at a collection point is assumed

to extend to the next collection point downstream.Natural gas pipe appurtenances or components that do not contain free-flowing liquids must be tested for surface level PCB concentrations using the standard wipe test (see part 761, subpart M). If drained natural gas pipe or appurtenances will be reused under § 761.30(i)(2) or (i)(3), rather than disposed of, testing is not required.

In a June 6, 1988, letter, EPA stated that it would presume that natural gas pipelines in EPA's 1981 Compliance Monitoring Program were contaminated at ≥500 ppm PCBs due to the discovery of such concentrations in components of the natural gas pipeline system or because natural gas purchased from another system had shown ≥500 ppm PCBs (Ref. 10). Much progress has been made in reducing PCB concentrations in natural gas pipelines under the Compliance Monitoring Program. Thus, EPA is formally ending the Program and releasing the affected natural gas pipeline companies from any further obligations under it as of the effective date of today's rule. Therefore, EPA's 500 ppm presumption policy for natural gas pipeline systems no longer applies. EPA believes that the final rule adequately addresses remaining actions necessary to further reduce PCB concentrations in natural gas pipelines while providing regulatory flexibility and reduced compliance costs.

One commenter asked EPA to clarify the relationship between the proposed regulations and EPA Technical Guidance Documents (TGDs). The commenter requested that EPA allow regulated entities the option of using TGDs and ADPs to meet the proposed requirements (e.g., §§ 761.30(i)(5) and 761.60), particularly with respect to using existing PCB concentrations rather than presumed concentrations. The three TGDs for declassification, abandonment, and classification of stored pipe (Refs. 11, 12, and 13) were developed to implement EPA's presumption policy of PCB contamination at ≥500 ppm. As discussed above, today's rule eliminates the presumption policy and allows natural gas pipeline systems to be managed based on actual PCB concentration. Therefore, today's regulations supersede these guidance documents.

e. *Research and development (R&D).* In the NPRM, EPA addressed the manufacture, use, processing, and distribution in commerce of PCBs and PCB waste material as analytical reference standards for research and development. EPA's objective in amending the § 761.30(j) use authorization was to clarify the types of activities covered by the R&D provision. Also, EPA wanted to broaden the category of PCBs covered by the authorization to facilitate real-world PCB cleanup activities (e.g., to include analytical reference samples from PCB waste materials, rather than limiting R&D activities to the use of less than 5 milliliters of hermetically sealed vials of PCBs). EPA clarified that the kind of activities for which the use of PCBs or analytical reference samples derived from PCB waste material is authorized includes, but is not limited to, chemical analysis or analyses which examine the concentration, physical properties, toxicity, environmental fate, health effects, transport processes, and metabolic products of PCBs.

Although the use of PCBs and PCBs in analytical reference samples derived from waste material is authorized in conjunction with PCB disposal-related activities, PCB disposal activities are governed by the requirements at § 761.60. Therefore, R&D into PCB disposal-related activities using limited quantities of PCBs is addressed at § 761.60(j) and is treated differently from all other R&D uses of PCBs when the intent is the development, assessment, and/or the perfection of a disposal technology. When the intent of the activity is an R&D study of PCBs, such as those activities listed above, it is an authorized use under § 761.30(j). When the intent of the activity is to conduct a study using PCBs to develop or assess the efficiency of PCB disposal technologies, it may qualify as a self-implementing R&D activity for PCB disposal pursuant to § 761.60(j).

Under § 761.30(j), analytical reference samples derived from PCB waste materials may be used if they have been obtained from an authorized source (i.e., in accordance with § 761.80(h) or (i)) and are packaged pursuant to Hazardous Material Regulations at 49 CFR parts 171 through 180. All PCB wastes resulting from the use of these samples during PCB R&D activities are required to be stored in compliance with § 761.65(b), must be manifested during transport to an approved storage or disposal facility, and once the use of PCB waste samples is complete, they must be disposed of in accordance with all applicable Federal, State, and local laws and regulations, including 40 CFR part 761.

Commenters noted the confusion created by having two R&D provisions, one relating to disposal (§ 761.60(j)), and one to other R&D activities (§ 761.30(j)). TSCA recognizes various categories of PCB activities: manufacture, processing, distribution in commerce, use, disposal, and combinations of such activities. The regulations generally adopt that structure, and the existence of two R&D provisions is therefore not new. EPA's intent is not to integrate disposal and use activities; to do so, would cause more confusion about the PCB R&D disposal approval requirements.

Two examples raised by one commenter illustrate the scope of the two R&D provisions. First, the analysis of PCB photochemical properties is R&D, but also destroys PCBs. To determine the applicable PCB provision, one should first assess the intent of the activity. Since the stated objective is to analyze the photochemical properties of PCBs, § 761.30(j) applies. EPA recognizes that analytical procedures may destroy PCBs, but that was not the objective in this example. Nor was the objective to develop, evaluate, or refine a disposal technology--activities requiring an R&D disposal approval under the existing rules.

Second, PCB waste materials are used as quality assurance samples to measure experimental error of analytical or scientific methods for PCBs. The expansion of the R&D use authorization to include these media is in response to the need to conduct PCB analyses on ''weathered'' PCBs such as those found at cleanup sites. These wastes can be used in interlaboratory studies to determine the toxicity and potential effects to health and the environment of PCBs that have bioaccumulated in the environment over time. When the waste sample is used to develop, evaluate, or refine a disposal activity, § 761.60 applies (e.g., § 761.60(j) for PCB R&D disposal activities using less than 1 kilogram of pure PCBs, or § 761.60(i)(2) where otherwise appropriate). Otherwise, use of the waste sample in analytical procedures would be conducted pursuant to § 761.30(j).

Another commenter suggested that EPA expand § 761.30(j) to read: PCBs may be used for R&D ''as samples of environmental media or mixtures of PCBs and solid waste'' to ensure that mixtures of PCBs, such as waste oil containing PCBs, could be used in R&D. Since the comment was so general, EPA is uncertain as to whether the commenter is concerned that they would be prevented from obtaining analyses of PCB mixtures. If the commenter's concern is about acquiring laboratory services to analyze samples of PCB mixtures, no further changes are required since chemical analysis is an authorized use of PCBs under § 761.30(j). The fact that the PCBs are found in samples of waste mixtures such as waste oil or solid waste does not preclude a laboratory from analyzing

them. EPA has modified the authorization to include PCBs in analytical reference samples derived from waste materials, if such samples are processed and distributed in commerce by persons with a TSCA section 6(e)(3)(B) exemption (e.g., either an individual exemption or as a member of the class exemption).

Commenters also confused the use authorization for PCBs and PCBs in analytical reference samples derived from waste materials at § 761.30(j) with the class exemption for processors and distributors of PCBs and analytical reference samples derived from PCB waste material at § 761.80(i). Section 761.30(j) authorizes the use of these materials in research and development — TSCA bans the use of PCBs unless authorized by rule. Section 761.80(i) allows individuals covered by the class exemption to gather and package (i.e., process) PCBs and analytical reference samples derived from PCB waste material for distribution in commerce. TSCA also bans processing and distribution in commerce of PCBs, but provides the exemption process by which EPA may allow such activities. Because TSCA provides different mechanisms for allowing use of PCBs as distinct from processing and distribution in commerce, these different activities are dealt with in separate sections of the rule.

Additionally, commenters found confusing EPA's proposed limitation of the PCB volumes used for R&D. EPA has concluded that limiting the quantity of a facility's use of PCBs is not necessary since quantity limitations have been established elsewhere in the regulations contingent upon the activity being conducted (e.g., processing, distribution in commerce, R&D for PCB disposal). However, EPA has retained the definition for ''small quantities for research and development'' since provisions previously established by EPA were based on this narrowly crafted definition and contributed to EPA's determination that the constraints were a sufficient precaution against the risk of human or environmental exposure to PCBs.

Also, EPA would have required notification of the appropriate Regional Administrator at least 30 days prior to the commencement of any R&D activity authorized under § 761.30(j). Commenters questioned whether EPA really intended for laboratories to notify the Agency of their R&D use activities. EPA agrees that the notification requirement is confusing and unnecessary, and has removed it from the use authorization at § 761.30(j).

Commenters representing university laboratories interpreted the scope of the PCB regulations to exclude educational institutions, such as labs at universities, from compliance with the PCB regulations. Commenters confessed confusion regarding EPA-approved activities and viewed the proposed use authorization at § 761.30(j) as being a framework for current research activities that would enable them to be in compliance with EPA rules. Unless specifically exempt, TSCA and its implementing regulations apply to all ''persons'' as defined in the regulations, which includes educational institutions (see § 761.3). Activities involving the use of PCBs are banned unless specifically authorized by 40 CFR part 761. Individuals are encouraged, therefore, to direct their inquiries to the Office of the Director, National Program Chemicals Division (7404), Office of Pollution Prevention and Toxics, 401 M St., SW., Washington, DC 20460, or their Regional PCB Coordinator, if they are uncertain about whether an activity is prohibited under TSCA and impacts their ability to engage in certain PCB activities such as qualifying for an EPA grant.

f. *Contaminated porous surfaces*. In response to comments, EPA has added a use authorization for contaminated porous surfaces contaminated by spills of liquid PCBs, such as concrete, wood, and coated metal surfaces. The authorization requires self-implementing controls to reduce exposure to the spilled PCBs and to restrict further migration of the PCBs from or within the porous material (see § 761.30(p)). Without this use authorization, these materials would have to be removed and disposed of. EPA agrees with comments that the removal of porous materials contaminated by spills of liquid PCBs is economically burdensome and unnecessary where release of and exposure to the PCBs can be controlled. EPA believes that the use conditions specified in § 761.30(p) will effectively prevent exposure to any residual PCBs in the contaminated porous material and therefore continued use of this material will not present an unreasonable risk. If a spill occurred on concrete and the source seeped through the concrete and into the underlying soil, the responsibility for addressing contamination to the underlying soil remains, even though the concrete could possibly meet the specified conditions.

g. *Rectifiers*. EPA is aware that a certain number of oil-filled and solid-state rectifiers (devices that convert alternating current to direct current) contain PCBs. Therefore, EPA proposed to authorize the continued use, at § 761.30(r), of PCBs at any concentration in rectifiers, and PCBs at less than 50 ppm to be used in servicing rectifiers for the remainder of their useful life.

EPA solicited comments and data on the following: (1) The number of rectifiers currently in use, (2) the extent of PCB contamination in rectifiers, (3) the size of such units and whether EPA should adopt a *de minimis* PCB volume at or above which rectifiers would be regulated under TSCA (e.g., in the same manners as capacitors with less than 1.36 kgs (3 pounds) of fluid are considered small and generally not regulated under TSCA for disposal), (4) the number of oil-filled versus solid state rectifiers, and (5) any information supporting a use authorization for rectifiers.

EPA is finalizing § 761.30(r) as proposed. Commenters indicated that rectifiers were typically found with less than 50 ppm PCBs. Therefore, due to their generally low concentration, EPA concludes that continued use of rectifiers for the remainder of their useful lives will not pose an unreasonable risk. Rectifiers are therefore authorized for continued use as long as they are serviced only with less than 50 ppm PCBs.

h. *Scientific instruments*. EPA proposed, at § 761.30(k), to authorize the use of up to 100 milliliters of PCBs at any concentration in scientific instruments, provided the PCBs were in use in the instrument at the time the final rule became effective. In today's final rule, EPA is dropping the ''in use'' provision based on comments that not all instruments are continually in use. In addition, a commenter was confused as to whether other currently authorized existing uses of PCBs in electrical equipment or scientific instruments not specifically mentioned in the authorization would now be prohibited. To clarify, this authorization does not prohibit other authorized uses of PCBs, such as in electrical transformers and capacitors, in instruments used for scientific study.

Commenters stated that experiments could require up to 150 milliliters of PCBs. Commenters also stated that the possibility of releases from scientific instruments is minimized because of OSHA's Laboratory Standards at 29 CFR § 1910.1450. Based on these comments, EPA concludes that the use of PCBs in scientific instruments at greater than 100 milliliters will not pose an unreasonable risk, the final rule does not retain the 100 milliliter limit.

Finally, EPA combined the proposed authorization at § 761.30(s) and three existing use authorizations, § 761.30(k),

Microscopy mounting medium; § 761.30(n), Microscopy immersion oil; and § 761.30(o), Optical liquids, into a single authorization at § 761.30(k) entitled ''Use in scientific instruments.'' Each of the four uses is included in the new combined authorization.

i. *Air compressor systems*. EPA proposed a use authorization and decontamination standards for air compressor systems as part of the use authorization for natural gas pipeline systems at § 761.30(i). In today's final rule, however, EPA has added a separate definition for ''air compressor systems'' at § 761.3 and authorized the use of PCBs in concentrations of ≥50 ppm in air compressor systems under specific conditions in § 761.30(s) to allow a reasonable time frame for removal and reduction of PCBs. The Agency made this change because the use of air compressors is not unique to the natural gas pipeline industry. Additionally, the decontamination requirements for air compressor systems are now found in the decontamination section in § 761.79.

As with natural gas pipeline systems, EPA believes that allowing continued use of the air compressor system while the PCBs are being removed does not pose an unreasonable risk, so long as the PCBs are contained in the system, are regularly removed in the condensate, and, when removed, are stored and disposed of in accordance with these regulations.

j. *Other gas and liquid transmission systems*. Commenters agreed with EPA's proposal to authorize use of PCBs in natural gas pipeline systems, but suggested that EPA expand the authorization to include other types of transmission systems. EPA has less comprehensive data regarding these other transmission systems, but the information indicates that these systems would be smaller in size than most natural gas pipeline systems. For this reason, and because of the wide variety of these systems, such an authorization is generally best made on a case-by-case basis. Therefore, under § 761.30(t) in today's rule, EPA is authorizing the use of PCBs at concentrations ≥50 ppm in other gas and liquid transmission systems which are owned or operated by a seller or distributor only with the written approval of the Director, National Program Chemicals Division. Owners or operators of these systems must take steps to identify and reduce PCBs to <50 ppm in demonstrated sources of PCBs within the pipeline system. This use authorization provides a mechanism to address rare cases of PCB-Contaminated gas or liquid systems which may not be authorized elsewhere to ensure that these systems are identified and cleaned to below 50 ppm PCBs. The rule also authorizes the continued use of PCBs in pipeline systems at <50 ppm. In addition, the rule authorizes the continued use of PCBs at concentrations ≥50 ppm in pipeline systems not owned or operated by a seller or distributor; owners or operators of these systems have no obligations under § 761.30(t).

k. *Use/reuse of decontaminated materials*. EPA clarifies in § 761.30(u) of today's rule that equipment, structures, or liquid or non-liquid materials that were contaminated with PCBs ≥50 ppm may be used or reused once decontamination standards and applicable use conditions set forth in § 761.30(u) are met. However, these materials may not be used or reused in direct contact with food, feed, or drinking water unless otherwise allowed in part 761. This restriction is designed to limit cross-contamination, thus reducing risk from PCB ingestion (see § 761.30(u)(2)). Water may, however, be used or reused without restriction if it is below the decontamination standard of 0.5 micrograms per liter in § 761.79(b)(1). Water containing PCBs at concentrations <200 μg/L (approximately 200 ppb) may be used or reused in industrial processes where there is no release from the process (e.g., as a non-contact cooling water).

Some commenters asked when equipment, structures, and other liquid or non-liquid materials used intermittently in PCB decontamination, cleanup, or servicing activities must be decontaminated. These items include, but are not limited to: distillation columns; wastewater treatment units; metal pans used to collect PCB liquids; and tools and other equipment used in cleanup activities. While in use, equipment such as that used in a wastewater treatment system (e.g., piping, filter-cake presses, and precipitators) is operating as a PCB waste management unit conducting decontamination activities as described in § 761.79 and as such does not need a TSCA PCB disposal approval. Any wastes removed from the equipment, such as filter-cakes or distillation bottoms, are subject to the PCB regulations based on the PCB concentration at removal.

Inactive equipment contaminated with PCBs as a result of its use during cleanup, decontamination, or servicing, but which will be reused for the same activities, may be eligible for the provisions for storage of PCB Articles designated for reuse in § 761.35 (see Unit IV.C. of this preamble). If the equipment will no longer be used, then it is subject to the subpart D storage and disposal requirements. If the equipment is inactive for less than 30 days, the temporary storage for disposal provisions for PCB Items under existing § 761.65(c)(1) could be utilized; after 30 days, the 1–year storage for disposal requirements in § 761.65(b) apply. If the equipment is decontaminated according to §§ 761.79 and 761.20(c)(5), it is exempt from further TSCA regulation.

C. Storage of PCB Articles Designated for Reuse

EPA proposed at § 761.67 to limit storage for reuse of PCB Articles in areas not designed, constructed, and operated in compliance with § 761.65(b) for a maximum of 3 years from the later of the date a PCB Article was taken out of service or the effective date of today's final rule. PCB Articles would have to be labeled when they were taken out of service and placed into storage for reuse. In addition, the storage for reuse of any PCB Article would have to comply with all marking and recordkeeping requirements. Information required on the labels for PCB Articles being stored for reuse would include the date the equipment was placed into storage for reuse or the effective date of the final rule, if the other date is not known; a projected location for the equipment's future use; and the date the equipment was scheduled for repair or servicing, if appropriate.

Commenters indicated that 3 years was not a sufficient time period for storing articles for reuse. Some commenters indicated that storage should be unlimited because of the 1– to 2–year lead time required for manufacturers to supply new equipment. Also, for electrical utilities or natural gas pipelines, commenters pointed to the urgency to maintain service by having replacements for emergencies at hand. Therefore, the Agency is extending the storage for reuse provision from 3 years to 5 years.

Commenters also disagreed with the storage for reuse labeling requirement, or indicated that the labeling requirement was burdensome and unnecessary because information EPA proposed to require on the label was already maintained in the annual document log. Based on comments received, EPA is not finalizing the proposed labeling requirement. PCB Articles are already required to be labeled indicating when they were placed in storage for disposal (§ 761.65(c)(8)). Therefore, requiring PCB Articles being stored for reuse also to be labeled could be confusing.

EPA is retaining at § 761.35 the other proposed recordkeeping requirements for PCB Articles being stored for reuse since much of this information is normally maintained in the facility's annual document log. The Agency believes that owners or operators with PCB Articles being kept for reuse already maintain records indicating when articles are removed for servicing or repair because of scheduling and budgeting purposes.

Commenters also indicated that the proposed requirement that owners or operators indicate the future use location of a PCB Article being stored for reuse was burdensome and unnecessary. The Agency disagrees. The knowledge on where an article was proposed for reuse distinguishes the article from one being stored for resale or disposal. The latter types of storage are prohibited unless appropriate regulatory controls are followed. Therefore, EPA is requiring that the projected location of the article to be included in the facility's annual document log.

Electrical utilities and natural gas pipeline or transmission companies commented that storing PCB Articles in an area which is designed, constructed, and operated in compliance with § 761.65(b) could cause delays in repairing equipment and restoring service to customers, without significantly reducing risk to health and the environment. EPA understands that emergency situations may require that certain PCB Articles be stored in close proximity to their potential use locations and in this final rule allows such articles to be stored for reuse in an area which was not designed, constructed, and operated in compliance with § 761.65(b) for no more than 5 years. PCB Articles may be stored for reuse indefinitely in an area designed, constructed, and operated in compliance with § 761.65(b), or outside such an area provided that the owner or operator has received written approval from the EPA Regional Administrator for the Region in which the article is stored.

D. Marking

EPA proposed several changes to the § 761.40 marking requirements, including changes to the marking of transport vehicles, storage units, Large Low Voltage Capacitors in use, and equipment in use containing PCB Transformers and PCB Large Capacitors. EPA also proposed an associated clarification to the PCB concentration assumptions for capacitors (see Unit IV.A.1.c. of this preamble).

1. *Transport vehicles*. Existing § 761.40(b) and (e) require the marking of transport vehicles carrying one or more PCB Transformers or 45 kg of liquid PCBs at concentrations of 50 ppm or greater. Existing § 761.40(b) and (e) essentially express the same requirements regarding marking transport vehicles loaded with liquid PCBs at 50 ppm or greater. EPA proposed to eliminate this duplication by combining references to the marking requirement for transport vehicles at § 761.40(b) and (e) under proposed paragraph (d), thus leaving the requirements for the remaining PCB Items under paragraph (e). EPA also proposed to extend the marking requirement to transport vehicles carrying 45 kg of PCBs (≥50 ppm) in any phase to make the marking requirements for transport vehicles carrying non-liquid PCBs consistent with those carrying liquid PCBs.

Commenters expressed general support for EPA's overall objective of clarification and elimination of duplication. However, most commenters opposed marking transport vehicles carrying non-liquid PCBs as unnecessary and problematic. For instance, utilities would have to mark service trucks because they occasionally transport one or more drums of waste from a cleanup site. Some commenters requested that EPA rescind the TSCA vehicle marking requirement altogether and defer to DOT placarding standards for vehicle marking. Several commenters noted that as drafted, the proposed rule would unintentionally be retroactively effective.

In today's final rule, EPA is combining references to the marking requirement for transport vehicles carrying liquid PCBs at existing § 761.40(b) and (e) under paragraph (b) (rather than paragraph (d) as proposed) and leaving the requirements for the remaining PCB Items under paragraph (e). This amendment does not result in any substantive change to the existing provisions at § 761.40.

The Agency is not finalizing the proposal to mark transport vehicles containing non-liquid PCBs. This change would impose more burdens on the regulated community than EPA envisioned, and is likely to complicate, rather than simplify, compliance. EPA agrees that it is not desirable to require utility service fleets to carry PCB labels on a routine basis when they will only occasionally transport small amounts of non-liquid PCBs. Regarding the comments recommending that EPA eliminate all the existing requirements at § 761.40 to mark transport vehicles, EPA believes that such a change would be outside the scope of this rulemaking, because EPA proposed to retain and strengthen these requirements.

Also, a commenter expressed concern that forklifts used to move PCB containers would require marking as transport vehicles. EPA clarifies that forklifts used on site (e.g., not used on public roads) are not considered transport vehicles and are not required to be marked as such under § 761.40(b).

Several commenters believe the 45 kg threshold for marking transport vehicles is based on the mass of the actual PCB molecules in the liquid. This has never been the case. Marking is triggered by 45 kg total weight of the material containing 50 ppm or more of PCBs, irrespective of the weight of the PCB molecules in that material, and has been since promulgation of the Disposal and Marking rule (43 FR 7150, February 17, 1978). For instance, a single drum containing 45 kg of mineral oil dielectric fluid at 50 ppm PCBs triggers the marking provisions. The total material weight also applies to the 45 kg trigger for recordkeeping provisions at existing § 761.180(a). This issue is clarified by new language at § 761.1(b)(6).

2. *Storage units*. Existing § 761.40(h) requires M_L marks on PCB Items and transport vehicles to be placed so that they can be easily read. EPA proposed modifying § 761.40(h) to require marks on storage units. No significant comment was received on the proposal and it is finalized as proposed.

3. *Large Low Voltage Capacitors*. In the NPRM, EPA noted that PCB Large Low Voltage (LLV) Capacitors often are not identified and disposed of properly at the time of removal, because they are not required to bear the M_L mark while in use. Accordingly, EPA proposed to require the marking of those PCB LLV Capacitors still in use, within 180 days of the effective date of the final rule. Allowances identical to those at existing § 761.40(c)(2) for PCB Large High Voltage (LHV) Capacitors were made for PCB LLV Capacitors in inaccessible locations.

EPA received several comments on the proposal. Some commenters felt the rule was reasonable and sensible, others that it was burdensome and that PCB LLV Capacitors in use posed little risk. Commenters expressed concern about the number of capacitors that would require marking under this rule, but provided no data or analysis to support contentions on the proposal's burden or the risk associated with unmarked PCB LLV Capacitors in use. One commenter noted that access to PCB LLV Capacitors in some equipment would be difficult. More than one commenter requested

that EPA allow records of unmarked PCB LLV Capacitors to be maintained off-site.

EPA believes that it is important to revise the marking provisions to include PCB LLV Capacitors in use. PCB LLV Capacitors in use were exempted from marking with the M_L in the original Disposal and Marking rule (43 FR 7150), to reduce the burden associated with the large numbers then in use. Instead, PCB LLV Capacitors were to be marked upon removal from use, and new non-PCB LLV Capacitors were required to be labeled ''No PCBs'' to distinguish them from unmarked PCB LLV Capacitors in use. The Agency's regional staff have reported observing over the last several years that PCB LLV Capacitors, being unmarked, are often mistaken by uninformed personnel as non-PCB, and disposed of improperly (rather than being identified as PCB, marked with an M_L, and disposed of as PCB waste). This problem will only increase, as aging PCB LLV Capacitors approach the end of their service life and are removed in increasing numbers. Industry familiarity with the 1978 M_L marking exception for PCB LLV Capacitors is likely to decline in the future, increasing the number of PCB LLV Capacitors misidentified for disposal. To complicate identification, the requirement that new LLV Capacitors be labeled ''No PCBs'' expires on July 1, 1998 (see existing § 761.40(g)). Also, although LLV Capacitors are less likely than LHV Capacitors to fail and leak in service, the risk of PCB exposure posed by PCB LLV Capacitors will increase as larger numbers of aging units fail in service. Accordingly, EPA believes the marking of all PCB LLV Capacitors is now necessary. The burden of this regulation will also be significantly less than it would be if it had been imposed in 1978, in that the number of PCB LLV Capacitors affected has greatly diminished through attrition and phase-out efforts.

Therefore, in today's rule, EPA is finalizing § 761.40(k)(1) to require marking of PCB LLV Capacitors in use. PCB LLV Capacitors in use in inaccessible locations inside equipment are exempt, provided that the equipment is marked. Such capacitors must continue to be marked individually at the time of removal from service. In regard to protected locations (e.g., power poles, structures or fences) with unmarked LLV Capacitors, EPA is not allowing the maintenance of records at a central location. Repair or spill response personnel may not have timely access to records maintained off-site at a central facility. Also, the on-site record requirement is consistent with the existing requirement for PCB LHV Capacitors at § 761.40(c)(2)(ii). EPA wants to emphasize that records are only required at a protected location if the owner chooses to leave individual capacitors there unmarked.

4. *PCB equipment in use*. Because of identification and disposal concerns, EPA is requiring that all equipment containing PCB Transformers or PCB Large Capacitors (High or Low Voltage), including equipment in use, be marked with the M_L mark (see § 761.40(k)(2)). Existing § 761.40(a)(4) only required equipment containing PCB Transformers or PCB LHV Capacitors to be marked at the time of manufacture, distribution, or removal from service. Today's rule expands this provision to cover all equipment with PCB LLV Capacitors, and equipment with PCB Transformers and PCB LHV Capacitors not already marked (i.e., in-service equipment not manufactured or distributed in commerce after the effective date of § 761.40(a)(4)). These marking provisions do not apply to equipment containing PCB-Contaminated Electrical Equipment.

E. Disposal

1. *Applicability*. In the final rule, EPA has created a new § 761.50, titled Applicability of Storage and Disposal Provisions. The purpose of § 761.50 is to guide the public to the subpart D provisions that apply to specific kinds of wastes and specific activities. There are four items of note about § 761.50. First, it contains general prohibitions and conditions applicable to all of subpart D. For example, EPA's policy that spills or other uncontrolled discharges of PCBs at concentrations of 50 or greater ppm constitute disposal, formerly at § 761.60(d)(1), is now at § 761.50(a)(4).

Second, § 761.50 clarifies that § 761.60 applies to PCB liquids and PCB Items, and not to other PCB waste, such as PCB remediation waste or PCB bulk product waste. Those wastes are now regulated by new §§ 761.61 and 761.62, respectively.

Third, EPA specifies the storage and disposal options for PCB/radioactive waste at § 761.50(b)(7). Any person storing PCB/radioactive waste ≥50 ppm PCBs must do so based on the PCB concentration of the waste, except as provided in §§ 761.65(a)(1), 761.65(b)(1)(ii), and 761.65(c)(6)(i) of this part. Any person disposing of PCB/radioactive waste at ≥50 ppm PCBs must do so taking into account both the PCB concentration and the radioactive properties of the waste. If, taking into account only the properties of the PCBs in the waste (and not the radioactive properties of the waste), the waste meets the requirements for disposal in a facility permitted, licensed, or registered by a State as a municipal or non-municipal non-hazardous waste landfill (e.g., PCB bulk product waste under § 761.62(b)(1)), then the person may dispose of the PCB/radioactive waste, without regard to the PCB component of the waste, on the basis of its radioactive properties in accordance with all applicable requirements for the radioactive component of the waste.

Fourth, § 761.50 clarifies the TSCA rules governing the regulatory status and cleanup of PCB spills and disposal sites in light of the ruling on the prefatory note exclusion to § 761.60 by EPA's Chief Judicial Officer in *Re: Standard Scrap Metal Company*, TSCA-V-C-288, Appeal No. 87-4, August 2, 1990 (Standard Scrap). See 59 FR 62792, December 6, 1994, for a discussion of that decision.

EPA proposed to delete the prefatory note, and substitute language on the disposal of PCB waste generated before 1978 as introductory text to § 761.60. In the final rule, this language appears at § 761.50(b)(3). That section provides that sites where PCBs have been placed in a land disposal facility (such as a dump, landfill, waste pile, or land treatment unit), spilled, or otherwise released to the environment prior to April 18, 1978, are presumed not to present an unreasonable risk of injury to health or the environment from exposure to PCBs at the site, and do not necessarily require further disposal action. The final rule allows the EPA Regional Administrator, on a case-by-case basis, to make a finding that spills, leaks, or other uncontrolled discharges, such as leaching, from a pre-1978 disposal site constitute ongoing disposal that presents an unreasonable risk of exposure to PCBs. The EPA Regional Administrator may make this finding regardless of whether the site is a spill, dump, land treatment unit, waste pile, stream, river, pond, lake, any sediment (or dredge material from a stream, river, pond, or lake), ground water, surface water, landfill, or any other type of disposal site. Once the EPA Regional Administrator makes such a finding, the owner or operator must dispose of the wastes until the unreasonable risk no longer exists. EPA believes that pre-1978 PCB disposal units or areas of contamination should not be allowed to remain ''in-service'' and thus unaddressed, as the existing prefatory note currently allows, if they pose an unreasonable risk due to exposure to PCBs.

Commenters argued that TSCA's applicability is clearly prospective and

that the proposed change inappropriately extends the reach of the TSCA regulations to spills and disposals which occurred prior to the effective date of the regulations. EPA's response is that section 6(e) provided EPA with a broad mandate to protect health and the environment from unreasonable risk of injury from PCBs. Just as EPA has banned or restricted the manufacture, processing, distribution in commerce, and use of PCBs where they pose an unreasonable risk of injury regardless of when that activity started or that piece of equipment was first put into service, EPA is now addressing PCBs disposed of in a manner which, due to spills, leaks, or other uncontrolled discharges from the site, constitutes ongoing improper disposal that now poses an unreasonable risk of injury.

With regard to sites containing PCB remediation wastes generated on or after April 18, 1978, owners or operators of those sites now have two choices: they may clean up the wastes in accordance with new § 761.61, or, if applicable, they may cleanup the wastes in accordance with EPA's Spill Cleanup Policy, part 761, subpart G.

Owners or generators of PCB remediation waste may unilaterally (for example, to obtain insurance, to sell property or to reduce civil liability) dispose of PCB remediation waste in accordance with self-selected portions of § 761.61, the Spill Cleanup Policy, or any other procedures, but are not afforded any relief from any regulatory liability from TSCA, based on that voluntary action alone.

2. *Landfilling of liquid PCBs*. In today's final rule EPA is removing the provisions formerly at § 761.60(a)(2)(ii) allowing the disposal of PCB-Contaminated mineral oil dielectric fluid, which has been stabilized on-site prior to disposal in accordance with § 761.75(b)(8), at a chemical waste landfill. However, the land disposal of PCB-Contaminated liquids from incidental sources associated with non-liquid PCB waste is allowed, if information is provided to or obtained by the owner or operator of the chemical waste landfill that shows that the waste does not exceed 500 ppm PCBs, is not an ignitable waste, and disposal does not violate RCRA land disposal regulations (see § 761.60(a)(3)). This provision applies to PCB-Contaminated liquids, which are in the form of precipitation, condensation, leachate or load separation and are associated with PCB Articles or non-liquid PCB wastes being disposed of in a chemical waste landfill. This provision does not apply to bulk liquid wastes, which must be disposed of in an incinerator or high efficiency boiler under § 761.60(a)(1) or (a)(2), or to liquid PCB remediation waste, such as stormwater runoff from PCB bulk product waste. Disposal of liquid PCB remediation waste is regulated at § 761.61(a)(5)(iv), (b), or (c).

The provisions allowing landfilling of liquids at less than 500 ppm were established May 31, 1979, when there was a limited number of incinerators permitted to burn PCB waste and disposal capacity was a concern. EPA believes the amount of low concentration PCB liquids anticipated to be designated for disposal and in storage for disposal can easily be accommodated by the existing and anticipated future PCB disposal technologies other than landfilling (See discussion of disposal capacity in the preamble to the Import for Disposal Rule (61 FR 11098, March 18, 1986).) EPA expects the existing PCB disposal and storage for disposal regulations and the amendments finalized today to accommodate the additional liquid PCBs requiring incineration or alternative disposal treatment. In addition, today's rule makes EPA policy on landfilling liquid PCBs more consistent with the prohibition on landfilling of liquid hazardous waste containing PCBs at concentrations of 50 ppm or greater under the RCRA land disposal restrictions at 40 CFR 268.32(a)(2) and 268.42(a)(1).

In the NPRM, EPA proposed to eliminate the landfilling of all PCB-Contaminated liquids, without exception. Approximately 10 comments were received on this issue. Several commenters were concerned about the implications of the ban on ''incidental'' or ''environmental'' liquids associated with non-liquid wastes, which usually are of an aqueous nature. Examples cited included precipitation, condensation, leachate, and load separation. To address this problem, § 761.60(a)(3) allows the disposal of such incidental liquids.

3. *Disposal in scrap metal recovery ovens and smelters*. Under the existing PCB disposal regulations (see existing § 761.60(b)(5) and (b)(6)), disposal of drained PCB-Contaminated Electrical Equipment and other drained PCB Articles is not regulated. At the time of the NPRM, a significant number of facilities were disposing of drained PCB-Contaminated articles (including PCB-Contaminated Electrical Equipment such as transformers) in scrap metal recovery ovens. These furnaces are also commonly referred to as sweat furnaces, bakeout ovens, and wire furnaces. However, some drained PCB-Contaminated articles have been prepared for metal smelting under uncontrolled combustion conditions such as open burning. Open burning can result in significant amounts of products of incomplete combustion such as PCBs, polychlorinated dibenzo-p-dioxins, and polychlorinated dibenzofurans (Ref. 14). Therefore, EPA has prohibited open burning (see § 761.50(a)(1)) and in § 761.72 has established scrap metal recovery ovens operating conditions that control emissions and result in no unreasonable risk of injury to health or the environment.

EPA has responded affirmatively to commenters who have provided acceptable alternatives to EPA's proposal, which required direct disposal of the drained PCB-Contaminated articles in a metal smelter. The commenters' alternative includes primary and secondary combustion chambers. In the primary combustion chamber, the articles are slowly warmed to a temperature below the melting point of aluminum and kept at that temperature for a number of hours, much longer than the time waste is in the primary chamber of a PCB incinerator. Any PCBs present in the drained PCB-Contaminated articles will vaporize or be destroyed at these temperatures. The primary combustion chamber operates under a slightly negative pressure (or draft) so that combustion gases do not leak out but are passed into the secondary chamber. The secondary combustion chamber operates at the same combustion conditions as a PCB incinerator. In the secondary chamber any remaining PCBs and any incomplete combustion products formed in the primary chamber are destroyed. Both EPA's proposed method and the method proposed by the commenters are included in the final rule.

Commenters did, however, express confusion over EPA's use of the term ''industrial furnace,'' as the proposal's adoption of the RCRA definition of that term at 40 CFR 260.10. In response to these comments, EPA has deleted this definition in the final rule, and has changed the terms in § 761.72. That section now refers at § 761.72(a) to ''scrap metal recovery ovens'' and at § 761.72(b) to ''smelters.'' Operating parameters for each type of device are specified. Any device that meets the operating parameters is authorized for disposal of PCB wastes specified in § 761.72 in accordance with those parameters.

EPA finds there is no unreasonable risk of injury to health or the environment from PCB, polychlorinated dibenzo-p-dioxin, and polychlorinated dibenzofuran emissions from incineration of small amounts of PCBs

in accordance with the requirements of § 761.72. Very small amounts of PCBs remain on drained surfaces of PCB-Contaminated equipment. This is the result of the original concentration of less than 500 ppm PCBs and the thinness of the dielectric fluid. The amount of PCBs present in the primary chamber of an industrial furnace is much smaller than would routinely be present in a PCB incinerator over the same time period. The amount of PCBs present in the primary chamber is even smaller than would be fed into most combustion facilities burning waste oil at less than 50 ppm PCBs under § 761.20(e), and the amount of PCBs in a secondary chamber is smaller still. EPA has further provided for the control of emissions by requiring scrap metal recovery ovens and smelters to have a final permit under RCRA or be operating under a valid State air emissions permit which includes a standard for PCBs (see § 761.72(c)).

In addition to intact drained PCB-Contaminated Electrical Equipment and other intact drained PCB-Contaminated articles (such as hydraulic equipment), scrap metal recovery ovens and smelters may be used to dispose of metal surfaces which are included in PCB remediation wastes and PCB bulk product waste. Metal in PCB remediation waste includes scrap metal found in an industrial sludge lagoon or rinsed drums formerly used to contain cleanup solvents. Metal in PCB bulk product waste includes pieces from disassembled, drained PCB-Contaminated transformers or metal surfaces coated with non-liquid PCBs such as painted pieces of fuel tanks. Non-metal PCB remediation wastes such as liquids, soils, sludges, and dredged sediments) and non-metal PCB bulk product waste (such as shredder fluff and air handling system gaskets) are not approved for disposal in scrap metal recovery ovens and smelters. However, waste oils containing PCBs at concentrations less than 50 ppm may be burned in scrap metal recovery ovens and smelters which qualify under specified conditions (see § 761.20(e)).

4. *PCB articles*—a. *PCB-Contaminated Electrical Equipment*. Drained PCB-Contaminated Electrical Equipment is not regulated for disposal under the existing PCB regulations at § 761.60(b)(4). In promulgating this provision, it was EPA's intent that disposal of this equipment in an approved incinerator or chemical waste landfill is not required. The equipment or its components would still have to be disposed of in a way that ended its useful life, such as salvaging through smelting when certain conditions are met (Ref. 15). EPA solicited comments in the NPRM on whether it should amend the regulations for the disposal of drained PCB-Contaminated Electrical Equipment to ensure that the equipment is properly disposed of and is not illegally reused. Possible remedies such as mandating decontamination and stricter controls to ensure that units were completely drained were not well received by commenters. In particular, most commenters stated that anecdotal information that drained PCB-Contaminated Electrical Equipment carcasses were used for barbecue grills reflected isolated instances of non-compliance.

EPA proposed to modify § 761.60(b)(4) to allow disposal of drained PCB-Contaminated Electrical Equipment only in facilities permitted, licensed, or registered by a State to manage municipal solid waste (excluding thermal treatment units), in an industrial furnace, or in a TSCA-approved disposal facility. EPA also proposed to amend § 761.60(b)(4) to require that equipment be drained for a period of not less than 48 hours, so that as much liquid as possible was removed from the equipment to further reduce PCB content prior to disposal.

Most commenters stated that defining a drain time added new burdens without providing additional protection to health or the environment. Instead, commenters felt that EPA should focus on the methods used to remove oil from transformers, especially large transformers where the actual draining procedure could be hazardous to personnel and the equipment. Specifically, commenters suggested that EPA consider pumping, vacuuming, and other methods as acceptable means for removing oil from transformers. In support, commenters provided test data indicating that 95 to 99% of the oil was removed from the transformer in the first hour and any residual oil removed during a 48-hour period would be extremely small. Because a small amount of residual oil still remained after draining, some commenters suggested excluding the use of State licensed municipal or industrial waste landfills as disposal options for this equipment. They felt this would be a reasonable exclusion because many State-permitted solid waste landfills do not accept this equipment.

EPA is not finalizing the requirement that transformers be drained for 48 hours. In addition, rather that requiring ''draining'' of PCB liquids, amended § 761.60(b)(4) allows PCB liquids to be ''removed'' (e.g., pumped or vacuumed). EPA realizes that liquid can be trapped in the inner workings and as an additional measure, EPA suggests a second removal action to ensure that as much liquid as possible is removed from the unit. EPA emphasizes that any residual liquid that remains is regulated and the receiving facility is responsible for its management. EPA is not excluding the use of State licensed municipal or industrial waste landfills as disposal options, because to do so would be counter to EPA's goal of providing flexibility, and would reduce the number of options available in areas where these landfills will accept this equipment.

b. *Small capacitors*. Under current § 761.60(b)(2)(ii), PCB small capacitors may be disposed of as municipal solid waste. In the NPRM, EPA sought data indicating whether there was support for statements by TSCA section 21 petitioners (Ref. 16) that the disposal practices at a municipal solid waste landfill, such as compaction, would cause PCB small capacitors to leak and cause a risk to health and the environment through ground water contamination. The Agency did not receive data substantiating these statements. Therefore, EPA will not change the disposal requirements for intact and non-leaking PCB small capacitors. Except for capacitors owned by manufacturers of capacitors or manufacturers of equipment containing PCB small capacitors, any quantity of intact, non-leaking PCB small capacitors may be disposed of in a municipal solid waste landfill. However, the Agency continues to recommend that generators of large numbers of intact and non-leaking PCB small capacitors dispose of them as PCB waste.

c. *Fluorescent light ballasts containing PCBs*. In the preamble to the NPRM, the Agency requested comment on information submitted in a TSCA section 21 petition (Ref. 16) that some fluorescent light ballasts manufactured prior to 1978 have PCBs at concentrations of 50 ppm or greater in their potting material. Potting material is insulating material which fills the space between the functioning parts of the ballast and its outer metal covering (shell). This information was supported by test data showing that the asphalt potting material used in fluorescent light ballasts has been found to contain PCBs (Refs. 17 and 18). Comments on the proposed rule confirmed that PCBs have been found in the potting material of some fluorescent light ballasts. These ballasts, therefore, are subject to a different disposal requirement than a fluorescent light ballast containing PCBs only in a PCB small capacitor. Where a fluorescent light ballast contains PCBs at 50 ppm or greater, other than in an

intact and non-leaking PCB small capacitor, the PCB small capacitor is no longer the controlling factor for disposal. Fluorescent light ballasts containing PCBs in their potting material must be disposed of in a TSCA-approved disposal facility, as bulk product waste under § 761.62, as household waste under § 761.63 (where applicable), or in accordance with the decontamination provisions of § 761.79 (see § 761.60(b)(6)(iii)).

Several commenters stated that the only way to determine whether fluorescent light ballasts contained PCBs at concentrations of 50 ppm or greater in their potting material would be to open, and essentially destroy, the ballast to analyze the potting material. While this may be true, the Agency is not requiring the testing of potting material for those units in use. Owners or operators will not be required to remove fluorescent light ballasts prior to the end of their useful life. However, if owners or operators of buildings are thinking of changing the fluorescent light ballasts, for example, for relamping the building for energy conservation, and would like to know the applicable disposal requirements, the Agency has two suggestions. First, assume that the potting material in the fluorescent light ballasts contains PCBs at 50 ppm or greater and dispose of them as PCB waste. Second, conduct a survey of the manufacturer and type of ballasts in use in the building and develop a random sampling plan for each manufacturer and type of ballast found and analyze the samples for PCBs. If no PCBs are found and the PCB small capacitors are intact and non-leaking, then the ballasts could be disposed of in a municipal solid waste landfill or recycled, through decontamination at § 761.79, for metals recovery. While there is no regulatory requirement to test the potting material for PCBs prior to disposal, TSCA requires owners or operators with PCBs to dispose of them properly. Not all fluorescent light ballasts contain PCBs. All ballasts manufactured between July 1978 and July 1998 are required to bear a ''No PCB'' label indicating that they do not contain PCBs. According to data submitted in the TSCA section 21 petition, ballasts manufactured prior to July 1978 have a better than 50% chance of containing PCBs at 50 ppm or greater in their potting material. Finally, State and/or local governments may have additional, more stringent, disposal requirements for PCB small capacitors or fluorescent light ballasts containing PCBs and some municipal solid waste landfills may not accept PCBs no matter what their form.

EPA has been aware for many years that fluorescent light ballasts can contain PCB small capacitors. Under existing rules, intact and non-leaking PCB small capacitors may be disposed of as municipal solid waste (unless the disposer is a manufacturer of PCB capacitors or PCB equipment) (see § 761.60(b)(2)(ii)). The TSCA section 21 petition alleged that disposal practices at municipal solid waste landfills can cause PCB small capacitors to rupture, creating a risk of ground water contamination. EPA asked for comment on this issue, and, in the event that additional disposal controls were needed, proposed to limit to 25 per year the number of fluorescent light ballasts containing PCB small capacitors that could be disposed of as municipal solid waste. EPA received no data confirming that the risk described in the TSCA section 21 petition existed. EPA therefore is not finalizing this limitation. However, disposers of fluorescent light ballasts that contain a PCB small capacitor should be aware that they could be subject to CERCLA liability if the municipal solid waste landfill becomes a Superfund site.

d. *Natural gas pipeline systems.* For reasons that are not well-understood, some natural gas pipeline systems have become contaminated with PCBs at regulated levels (i.e., ≥50 ppm PCB). Contaminated systems have been operated under compliance agreements and § 761.60(e) alternate disposal approvals (Ref. 9). Today's rule prescribes the conditions under which natural gas pipeline systems containing PCBs are authorized for use and reuse (see Unit IV.B.3.d. of this preamble and § 761.30(i) of the regulatory text), and requirements under which natural gas pipeline systems can be abandoned in place or otherwise disposed of without posing an unreasonable risk (see § 761.60(b)(5)).

Those who hold alternate PCB disposal permits or approvals issued under § 761.60(e) may continue to use those approvals within the confines of their specific conditions to dispose of natural gas pipeline and appurtenances. A company may, however, request in writing that EPA revoke its alternate disposal approval to allow the company to comply with today's regulatory requirements in lieu of the conditions specified in its disposal approval. EPA continues to reserve its right to modify the conditions of the alternate disposal approval when, for example, applicable regulatory requirements for disposal, decontamination, or reuse are changed. Accordingly, EPA does not intend to grant renewals for existing alternate disposal approvals in cases where the final PCB regulations adequately address protection of human health and the environment. These approvals have been issued based on a no unreasonable risk finding. However, some specific conditions in approvals are different from similar general conditions in the rulemaking. These specific conditions are based on monitoring data collected during disposal and other pipeline maintenance operations conducted under the approval. This data may not be applicable to the general population of natural gas pipeline systems.

Today's rule generally requires that all free-flowing liquids be removed from natural gas pipe abandoned in place or removed for disposal.

Most of the abandonment and disposal provisions for natural gas pipeline systems apply where the systems contain PCBs at any concentration ≥50 ppm. There is one provision for abandonment and one provision for removal with subsequent action that apply to PCB-Contaminated systems (i.e., ≥50 and <500 ppm PCBs). Any person disposing of a natural gas pipeline system under either of these provisions (paragraphs (b)(5)(i)(B) or (b)(5)(ii)(A)(*1*)) must characterize it for PCB contamination by analyzing organic liquids collected at existing condensate collection points in the natural gas pipeline system. The level of PCB contamination found at a collection point is assumed to extend to the next collection point downstream, i.e., the next existing condensate collection point unless pipeline maintenance or other activity results in a closer sampling location. If no organic liquids are present, drain free-flowing liquids and collect standard wipe samples according to subpart M. Collect condensate within 72 hours of the final transmission of natural gas through the part of the system to be abandoned and wipe samples after the last transmission of gas through the pipe or during removal from the location it was used to transport natural gas. PCB concentration of the organic phase of multi-phasic liquids must be determined in accordance with § 761.1(b)(4).

Pipeline liquids containing ≥50 ppm PCBs removed from the system must be disposed of as PCB remediation waste in accordance with § 761.61(a)(5)(iv), based on the PCB concentration present at the time liquid is removed from the pipeline. This does not mean that non-pipeline liquids or non-liquids may be added to the pipeline liquids either prior to or during removal to result in dilution of the concentration of the liquids. Liquids containing <50 ppm PCBs may be burned for energy recovery in accordance with the provisions

pertaining to used oil at § 761.20(e). Commenters questioned the need to separate organic and aqueous phases of condensate for disposal. It is not complicated or expensive to separate the organic phase of condensate from the aqueous phase. Separation is not needed if all of the multi-phasic liquid is disposed of as determined by a concentration of ≥50 ppm in the organic phase.

i. *Abandonment*. The final rule specifies how natural gas pipeline systems containing ≥50 ppm PCBs may be abandoned in place when no longer in use. Requirements differ depending on the PCB concentration in the system and the diameter of the pipe. The few changes made from the NPRM are to clarify language and expand the options available.

ii. *Removal with subsequent action*. The final rule also specifies the requirements for natural gas pipeline systems containing ≥50 ppm PCBs that are removed for disposal. Depending on the PCB concentration in the system and the diameter of the pipe, natural gas pipe may be disposed of in a municipal solid waste landfill, a TSCA-approved incinerator or chemical waste landfill, as PCB bulk product waste, or may be decontaminated.

EPA received comments that the interior of natural gas pipe is covered with a thin, porous coating to inhibit corrosion and thus could not be decontaminated under § 761.79. That section provides methods for decontamination of non-porous, but not porous, surfaces. EPA has amended the definition of non-porous surface at § 761.3 to clarify that this coated natural gas pipe is considered a non-porous surface (see § 761.60(b)(5)(ii)).

Commenters asked whether dry pipe could be smelted in a steel melting furnace, and whether such smelting would be regulated as use, reuse or disposal. As provided in § 761.79(b)(3)(ii), non-porous surfaces, such as natural gas pipe, contaminated at less than 100 μg/100 cm^2, may be smelted in an industrial furnace operating in accordance with § 761.72(b). Metal smelting of the residual surface PCBs is PCB disposal even though the smelted metal may be used or reused.

iii. *Sampling (subpart M)*. EPA clarifies that the regulatory status of natural gas pipe is based on the PCB concentration in free-flowing condensate liquids in the pipe. If no free-flowing liquids exist in the pipe at the time of sampling, surface sampling is required.

EPA made several changes to the sampling protocol in response to comments. First, although the EPA Regional Administrator may approve of smaller sampling surface areas on a case-by-case basis, EPA believes that 100 cm^2 is available for sampling in most natural gas pipeline situations. Second, EPA revised the sample site location procedure to account for the potential loss of surface residues of PCBs from the thermal cutting of pipe. Third, with respect to the sampling location in a pipe segment that has been removed for disposal, only one sample from one end of a pipe segment is now required rather than a sample at each end of the pipe segment. EPA does not expect concentration differences at the downstream end of a pipe segment and the upstream end of the adjacent downstream pipe segment to be significantly different. Fourth, EPA has provided two options for selecting the sampling site among a contiguous set of pipe segments less than 7 miles long.

For sampling pipe to be abandoned in place, EPA is requiring sampling at the ends of the section to be abandoned and is designating the sampling unit to be between the pressure side of a compressor station and the suction side of the next compressor station downstream of the gas flow. EPA has also revised and clarified language on extrapolating the PCB disposal regulatory status of an unsampled pipe segment that is part of a population that has been sampled for removal, disposal, or abandonment. In addition, EPA clarified the regulatory status of pipe with respect to surface concentrations measured in the characterization samples.

EPA derived the sampling protocol (part 761, subpart M) from its oversight of natural gas pipe removal by parties to the 1981 compliance agreement with EPA. The sampling procedure accounts for the distribution of condensate through the pipeline system over time by the flow of natural gas and for pipeline system management practices.

e. *Dermal protection*. EPA proposed, at §§ 761.60(b)(6)(iii) and 761.79(a)(5), to require that anyone coming in contact with surfaces contaminated with PCBs at levels of 10 to <100 μg PCB/100 cm^2 must be protected from dermal exposure to those surfaces (59 FR 62860). EPA removed the concentration range because it intended to prevent dermal contact, not require measurements. Most disposal operations managing this waste would require dermal protection for handling sharp-edged metal material whether there were residual PCBs on the surfaces or not. The final rule at §§ 761.60(b)(6)(iv) and 761.79(e)(2) requires workers to wear or use protective clothing or equipment to protect against dermal contact or inhalation of PCBs or materials containing PCBs.

5. *Alternate disposal*. Section 761.60(e) allows persons who are required to incinerate PCBs and PCB Items and who can demonstrate that an alternate destruction method that can achieve a level of performance equivalent to § 761.70 incinerators exists, may submit a written request to the EPA for an exemption from the incineration requirements of § 761.60 or § 761.70. EPA did not intend that the submission of this application be optional, as could be construed by the word ''may'' in § 761.60(e). EPA, therefore, proposed to amend § 761.60(e) to clarify that written approval to use an alternate method of destroying PCBs or PCB Items must be obtained from EPA prior to using the method to destroy PCB waste. EPA received no negative comments on this proposed wording change and it is finalized as proposed.

6. *Analytical procedures*. In the NPRM, EPA proposed to require that chemical analysis of PCBs be conducted using gas chromatography. The proposal did not require the use of a specific gas chromatographic procedure since the selection of an analytical method would vary according to the material being tested (see 59 FR 62861). EPA also solicited comments on whether ASTM Method D-4059, ''Standard Method for Analysis of Polychlorinated Biphenyls in Insulating Liquids by Gas Chromatography'' should be listed at § 761.60(g)(1)(iii) and (g)(2)(iii) as an acceptable analytical method (see 59 FR 62826).

Two commenters suggested EPA identify specific sample preparation and gas chromatographic analytical techniques for specific uses and materials. Although EPA recognizes variability can exist when different testing methods and procedures are used to analyze PCBs, EPA has determined that the statutory requirement to consider the costs and benefits associated with establishing regulatory requirements argues for increased flexibility at the expense of precision. As a result, § 761.60(g)(1)(iii) and (g)(2)(iii) offer the maximum flexibility for individuals to use gas chromatographic procedures that are available through both EPA published methods and ASTM testing methods. However, in the final rule, EPA is clarifying that the methods other than those specified in the regulations must produce results that obtain a level of performance equal to or better than the specified methods. If analytical differences arise, the Agency will use

those methods outlined in SW-846, Test Methods for Evaluating Solid Waste, to verify analytical determinations.

EPA received one comment that the applicability of ASTM D-4059 was very limited and restrictive. Although ASTM D-4059 may be limited, some individuals may deal with only a narrow assortment of dielectric fluids. Thus, EPA has included ASTM D-4059 as an example of an acceptable method in § 761.60(g).

7. *Research and development for PCB disposal.* EPA has found that properly conducted research and development for PCB disposal presents no unreasonable risk. When approving these activities under current § 761.60(e), EPA generally takes into account such factors as the quantity of PCB waste in the study; whether the capacity for approved PCB disposal exceeds demand; whether there may be some specialized wastes for which there is no currently approved disposal method; and whether there may be some locations where there is a sufficient quantity of waste that existing approved disposal technologies might be inadequate or where the economics of the existing approved technologies prohibit necessary cleanup. EPA also takes into account the inability of a number of research for disposal approvals to achieve performance objectives. For these studies, EPA still requires a written approval, because larger amounts of waste potentially pose more obstacles to treatment and disposal and greater potential for risk from incomplete or unsuccessful disposal.

Today's rule establishes a self-implementing approval for disposal research and development studies using smaller quantities of materials. For these approvals, the maximum annual amount that may be treated during R&D for disposal activities is 500 gallons of liquid PCB waste or 70 cubic feet of non-liquid PCB waste. These amounts should be sufficient to perform most research at a pilot disposal unit scale. The PCB material may not exceed 10,000 ppm. Each R&D for PCB disposal activity under this section may last no more than 1 year.

One commenter saw the requirement to provide 30–day advance notification to EPA, State, and local authorities prior to the start of a R&D for disposal activity as an unnecessary burden which would encumber scientific research and not provide any benefits. EPA strongly supports community right to know. EPA knows of few research projects which are so essential or time-sensitive that the 30–day notice would cause a severe hardship. However, EPA will not require the 30-day advance notification of disposal, if EPA, State, and local authorities waive the requirement in writing.

Some commenters had difficulty understanding the distinction EPA was making between PCB R&D activities for use and for disposal. TSCA itself creates the distinction. One objective of TSCA and the PCB regulations is to direct PCBs out of use and into disposal so that they can no longer present a risk of injury to health or the environment. EPA may authorize the use of PCBs that pose no unreasonable risk of injury to health or the environment, but when the PCBs are no longer in use, they must be disposed of. For example, PCBs in storage for disposal may not be reused. Today's rule authorizes chemical analysis and scientific experimentation using PCBs in a separate category under § 761.30(j).

Commenters noted that some chemical analysis of PCBs under § 761.30(j) would result in the destruction (i.e., disposal) of PCBs, and that all PCBs in R&D, including R&D for disposal, could be viewed as in use until the research and development was completed. EPA believes that the use of PCBs in the R&D activities under § 761.30(j) poses inherently different risks from the R&D for disposal activities under § 761.60(j). For example, the amounts of PCBs used in scientific research are small and strictly accounted for, while amounts used in disposal research can be much larger and their ultimate fate depends on the success of the disposal technology. In addition, PCBs used in research under § 761.30(j) are used in a controlled environment by trained laboratory staff, while PCBs used in § 761.60(j) may be in open environments. Therefore, EPA has finalized these provisions essentially as proposed.

Other commenters objected to the 1–year limit on self-implementing R&D for disposal. EPA recognizes that some R&D for PCB disposal activities may last more than 1–year. The rule allows the EPA Regional Administrator to grant extensions to the time limit, and this process should not result in delays if timely requests for extension, including a report on the progress of the R&D for disposal activities, are provided to EPA. In the past, when conditions of the approvals have been met, EPA has extended in a timely manner bioremediation and other kinds of ''treatability'' R&D for disposal approvals for more than 3 years after an original 1–year approval.

Based on comments requesting a clarification, the introductory sentences from § 761.60(j) of the proposal were moved to § 761.3 to create a definition of ''research and development for PCB disposal.''

8. *PCB remediation waste.* The proposed rule provided for three PCB remediation waste disposal options: (1) Self-implementing disposal similar to the PCB Spill Cleanup Policy, which is an enforcement policy codified at 40 CFR part 761, subpart G (see § 761.61(a)); (2) existing approved disposal technologies (see § 761.61(b)); and (3) risk-based disposal (see § 761.61(c)). EPA has retained each of these three options. General comments about the options are discussed first; more specific comments are discussed under the heading for each option.

Commenters sought clarification on: (1) The regulatory status of PCB remediation waste generated prior to April 18, 1978; (2) use or disposal of sewage sludge; (3) management of liquid PCB remediation waste; (4) management of radioactive PCB remediation waste; and (5) the applicability of the PCB Spill Cleanup Policy (part 761, subpart G). PCB remediation waste generated prior to April 18, 1978, is discussed in Unit IV.E.1. of this preamble, which explains new § 761.50, Applicability of Storage and Disposal Provisions. EPA consolidated the liquid PCB remediation wastes disposal options in § 761.61(a)(5)(iv).

Commenters were concerned that PCB remediation waste stored at the cleanup site for more than 30 days prior to disposal would have to be stored in accordance with § 761.65(b). EPA has added § 761.65(c)(9) to allow on-site storage of bulk PCB remediation waste in a way which prevents uncaptured releases in case of a spill and controls migrations from precipitation and volatilization. Waste transported off-site must be packaged according to the Hazardous Materials Regulations at 49 CFR parts 171 through 180 and stored for disposal in facilities approved under § 761.65(b).

EPA received comments on the applicability of 40 CFR part 761, subpart G, the PCB Spill Cleanup Policy. The only change EPA made to subpart G was to decrease the minimum reportable quantity from 10 pounds to 1 pound of PCBs. EPA continues to emphasize that subpart G is not a regulation but an enforcement policy that applies to releases from authorized uses. EPA intends that new § 761.61 will address more spill scenarios than subpart G does, such as (1) those which occurred prior to May 4, 1987, and (2) those which occurred after May 4, 1987, where notification was not given and/or where cleanup was not begun in accordance with the PCB Spill Cleanup

Policy. Many commenters wanted to extrapolate subpart G to other cleanup waste scenarios instead of using proposed § 761.61. Today's final rule does not expand the scope of subpart G, but EPA factored many of the assumptions used in subpart G, such as the time allowed for PCBs to migrate from a spill, into § 761.61.

The NPRM stated that the self-implementing option of § 761.61 would not apply at sites being cleaned up under CERCLA, RCRA, or any EPA enforcement action. A number of commenters suggested that this provision was too broad because it would preclude the self-implementing option even at portions of such facilities that were not being addressed by other authorities. One commenter stated that the reference to other enforcement actions by EPA was too vague.

EPA did not intend to prevent or discourage persons from conducting self-implemented cleanups where another part of the same facility is being addressed under an authority such as CERCLA or RCRA. But EPA also clarifies that a facility cannot unilaterally decide to do a self-implementing cleanup under § 761.61, and then contend that their decision precluded any further or different cleanup under other authorities. As modified, today's rule does not prevent a person from conducting a self-implementing cleanup at any part of its property, even if another part of the facility is also being addressed under some other authority. For example, a large site having zones A, B, and C could have an on-going RCRA corrective action cleanup at zone A, a CERCLA section 106 order at zone B, and still potentially be eligible for a self-implementing PCB remediation at zone C. Section 761.61(a)(1)(ii) simply clarifies that such action by the facility does not bind other cleanup programs, such as CERCLA or RCRA, which remain free to determine which parts of the facility they will address and how to do so, using their usual cleanup criteria. Since sites contaminated with PCBs often contain other contaminants such as metals and organic solvents, each remedial action needs to consider and address all constituents of concern. If a person is considering doing a self-implementing cleanup at a portion of the facility likely to undergo cleanup under some other Federal or state program, the person would be well-advised to coordinate with that program before proceeding, to avoid having to do further work after its self-implementing cleanup was completed. With respect to PCB remediation waste cleanup, EPA acknowledges the usefulness of the documents entitled: *Guidance on Remedial Actions at Superfund Sites with PCB Contamination*, EPA/540/G-90/007, August 1990; *Technology Alternatives for the Remediation of PCB-Contaminated Soil and Sediment*, EPA Engineering Issue, EPA/540/S-93/506, October 1993; and *Best Management Practices (BMPs) for Soil Treatment Technologies: Suggested Operational Guidelines to Prevent Cross-media Transfer of Contaminants during Clean-up Activities*, EPA 530-R-97-007, May 1997. These documents are available from the RCRA Hotline at 1-800-424-9346.

Some commenters also stated that EPA should clarify how this rule would operate as an ''applicable or relevant and appropriate requirement'' (ARAR) under CERCLA. Cleanup decisions at CERCLA sites have relied on the 1987 TSCA PCB Spill Cleanup Policy. It must be noted that because the Spill Cleanup Policy is not a binding regulation, it is not an ARAR for Superfund response actions. However, as policy reflecting substantial scientific and technical evaluation, it has been considered as important guidance in developing cleanup levels at Superfund sites. EPA anticipates that today's rule will be a potential ARAR at CERCLA sites where PCBs are present. EPA would expect that CERCLA cleanups would typically comply with the substantive requirements of one of the three options, provided by § 761.61, upon completion of the cleanups. This decision would not be made by the facility, but in the remedy selection process.

a. *Self-implementing option*. EPA reorganized proposed § 761.61(a), and the reorganized structure is reflected here.

EPA did not intend self-implementing PCB remediation waste disposal to apply to large PCB remediation sites unless very stringent sampling requirements are used. EPA intended it to address moderate sized sites where only PCBs were present (or the properties of PCBs drove cleanup decisions) and where a general no unreasonable risk remedy would be acceptable. Generic risk assumptions and sampling approaches for small areas of contamination cannot be universally applied to very large sites. Nor can sampling schemes for continuously generated, current waste streams from well-characterized industrial processes serve as a scientifically sound starting point for large areas where the homogeneity of the waste is unknown. Sampling must be much more comprehensive for heterogeneous waste (or waste of unknown homogeneity) where little is known about contamination sources, the periodicity and exact location of waste generation, and any PCB migration from the waste since original deposition. Much greater knowledge from pre-cleanup characterization of waste can reduce verification sampling. Through a risk-based approval at § 761.61(c), the EPA Regional Administrator can more actively evaluate measurements taken concurrently with cleanup (as is done at Superfund National Priority List (NPL) sites) as an alternative to a more stringent self-implementing verification sampling approach required in § 761.61(a). Without the same level of oversight as in NPL sites, self-implementing verification sampling should be comprehensive. To limit transaction time for site cleanup and constraints on cleanup, EPA placed the site sampling emphasis in § 761.61(a)(5) at the post-cleanup verification period, rather than under the limited pre-cleanup site characterization in § 761.61(a)(2).

i. *Applicability*. The applicability section of the NPRM provided that the self-implementing remediation waste option was not applicable to areas having human or animal populations that might have a higher sensitivity to the toxic effects of PCBs. This provision has been deleted in response to comments it could apply to almost all sites. New language has been added at § 761.61(a)(4)(vi) to enable the EPA Regional Administrator, based on the notification required in § 761.61(a)(3), to require cleanup of the site or a portion of the site to more stringent cleanup levels based on proximity to areas such as residential dwellings, hospitals, schools, nursing homes, playgrounds, parks, day care centers, endangered species habitats, estuaries, wetlands, national parks, national wildlife refuges, commercial fisheries, and sports fisheries.

ii. *Site characterization*. Today's rule requires any person conducting self-implementing cleanup of PCB remediation waste to characterize the site adequately to be able to provide the information necessary for the Regional Administrator to review the cleanup plan. The proposal required detailed small scale information, such as numbers of characterization sample results (proposed Appendix II). Today's rule is more flexible, providing subpart N as a reference point for the assessment of sampling data, but allowing other sampling methods that are as effective at characterizing contamination at the site.

EPA also clarified that non-liquid sample results shall be reported on a dry weight basis, as μg/g of sample. Liquid sample results must be reported on a

wet weight basis as μg/g of sample. Surface sampling results shall be reported as μg/100 cm^2 (see § 761.274 of the regulatory text). Regardless of the size of the surface area, divide 100 cm^2 by the surface area and multiply this quotient by the total number of micrograms of PCBs on the surface to obtain the equivalent measurement of micrograms per 100 cm^2.

iii. *Notification and certification*. Commenters sought to eliminate the notification requirement, based on inconvenience and not wanting to identify the site, rather than risk/exposure concerns. EPA is continuing its policy of providing State and local jurisdictions advanced notice of PCB disposal. Section 761.61(a)(3) was redesignated and revised to designate who in the State and local agencies would receive the notification.

EPA clarifies that it did not intend the 30–day notification requirement to prohibit emergency cleanup (see § 761.61, introductory text, of the regulatory text). Emergency cleanup may occur without notification, but does not satisfy the requirements of § 761.61. Emergency cleanup is appropriate where there is imminent danger to health and the environment without containment and/or treatment. Emergency cleanup is not appropriate to prevent additional cleanup costs or other business expenses resulting from containment or from waiting 30 days for the notification process to be completed. Emergency response personnel should communicate directly with EPA regional personnel on proposed remedial actions. EPA has retained language allowing less than 30 days notification if the EPA Regional Administrator, and State and local officials who are required to receive the notification, waive the 30–day requirement in writing (see § 761.61(a)(3)(iii) of the regulatory text).

iv. *Cleanup levels*. EPA did not receive comments which justified changes in the proposed cleanup levels. However, the final rule retains the proposed provision at § 761.61(c) allowing the EPA Regional Administrator to approve risk-based cleanup levels, on a case-by-case basis, different than those required in § 761.61(a). The final rule organizes § 761.61(a)(4) by the PCB remediation waste medium: bulk PCB remediation waste, non-porous surfaces, porous surfaces, and liquids.

The proposed definitions at § 761.3 for ''high exposure area'' and ''low exposure area,'' have been changed in two ways: (1) To reflect that EPA is addressing the occupancy of the area by individuals not wearing dermal and respiratory protection as a surrogate for reasonable worst-case exposure; and (2) to reflect that EPA evaluates the exposure risk in the area based on the combination of the final concentration of PCBs in the area and the amount of time of exposure. The term ''high exposure area'' is now ''high occupancy area'' and ''low exposure area'' is now ''low occupancy area.'' Many outdoor areas will be low occupancy areas; others, such as school playgrounds and residential yards, might be high occupancy areas. Commenters offered several terms in place of the proposed ''high exposure area'' and ''low exposure area.'' Only one actually focused on the risk-based foundation of the self-implementing cleanup: the exposure of an individual. This comment suggested that occupancy was a reasonable worst-case surrogate for exposure and offered an extensive description of occupancy scenarios. EPA used a simpler variation of the comment as the final definition.

The final rule is structured so that the risk to occupants not wearing dermal and respiratory protection of high occupancy areas and low occupancy areas is generally the same. For the same chemical (PCBs) the risk is directly proportional to exposure. The rule allows different concentrations of PCBs to remain in high occupancy areas and low occupancy areas based on different occupancy times (see § 761.61(a)(4) of the regulatory text). For example, the non-porous surface cleanup level for high occupancy areas is 10 μg PCB/100 cm^2, and for low occupancy areas is 100 μg PCB/100 cm^2, an order of magnitude difference. Therefore, to have the same risk of exposure, the maximum occupancy time must be 1/10 as long in a high occupancy area as in a low occupancy area. For bulk remediation materials, EPA allows cleanup levels of 1 ppm in high occupancy areas and 25 ppm in low occupancy areas. EPA believes that the measures taken to prevent exposure in low occupancy areas, such as capping, marking and fencing, provide sufficient additional protection to normalize the higher cleanup levels.

EPA's evaluation of risk assumed unprotected exposure 24 hours a day, 7 days a week (168 hours per week) for the high occupancy scenario. Because the surface cleanup concentrations are 10 times as high in the low occupancy area as in the high occupancy area, to have the same exposure in both areas, the low occupancy unprotected exposure would have to be 1/10 of the high occupancy exposure period, or less than 16.8 hours per week. For bulk materials, the low occupancy exposure would be 1/25 of 168 hours, or less than 6.7 hours per week. The number of hours in the definitions of ''high occupancy area'' and ''low occupancy area'' in § 761.3 reflect these weekly averages times a 50–week exposure per year assuming a 2–week annual vacation from the occupancy area, that is 50 weeks x 16.8 hours/week = 840 hours and 50 weeks x 6.7 hours/week = 335 hours.

EPA has limited the self-implementing option to these two scenarios based on the risk-based concepts implemented as part of the Spill Cleanup Policy in 40 CFR part 761, subpart G (Refs. 19 and 20). EPA's experience has been that most cleanup scenarios have been effectively dealt with by the two-tiered approach in the Spill Cleanup Policy. In the few instances where the two-tiered approach has not readily addressed a particular cleanup scenario, the EPA Regional Administrator has exercised flexibility to allow less stringent or alternative requirements. (See 40 CFR 761.120(c)). Similarly, under § 761.61(c), the EPA Regional Administrator has the flexibility to grant a risk-based approval for cleanup of PCB remediation waste to levels different from those specified under the defintions of ''high occupancy area'' and ''low occupancy area.''

Revised § 761.61(a)(4) also requires the owner of an area cleaned up to the levels of a low occupancy area to clean the area to the levels of a high occupancy area where there is a change in the use of the area such that exposure to PCBs could reasonably be expected to increase.

v. *Site cleanup*. EPA is clarifying in § 761.61(a)(5) that PCB disposal technologies approved under §§ 761.60 and 761.70 are acceptable for on-site self-implementing PCB remediation waste disposal within the confines of the operating conditions of the respective approvals. For example, technologies approved under § 761.60 or § 761.70 for disposal of PCB liquids may not be used to dispose of soil. Technologies approved under § 761.60 or § 761.70 to dispose of PCBs in soil at concentrations less than 500 ppm may not be used to dispose of soil containing greater than 500 ppm PCBs.

The only forms of on-site disposal technology which do not require an approval under § 761.60 or § 761.70 and which are approved for self-implementing disposal are soil washing and decontamination in accordance with § 761.79. Soil washing is extraction of PCBs from soil using a solvent, recovering the solvent from the soil, separating the PCBs from the recovered solvent for disposal, and then disposal

or reuse of the solvent in accordance with § 761.79(d) and (g).

Based on comments received on the potential emissions of products of incomplete combustion from *in-situ* vitrification and EPA's experience in approving this disposal technology, this technology may not be used for on-site disposal without an approval from EPA under § 761.60(e) or § 761.61(c).

EPA assumed that the primary application of self-implementing cleanup would be safe and effective on-site treatment and land disposal (e.g., PCB concentration reduction, with the PCBs destroyed on-site, followed by on-site land disposal). EPA did not intend to prohibit or discourage off-site disposal, and is retaining the off-site disposal regulatory options which have been in place since April 18, 1978 (see § 761.61(b) of the regulatory text). EPA recognizes that some materials will be sent off-site because of the economics of on-site treatment of small amounts of unusual or high concentration waste. Today's rule expands the options for off-site disposal; for example, PCB remediation waste containing less than 50 ppm PCBs may be sent off-site for disposal in State-approved land disposal facilities for the management of municipal solid waste landfills permitted by EPA under section 3004 of RCRA, or by a State authorized under section 3006 of RCRA; or disposal facilities approved under 40 CFR part 761.

EPA received comments requesting the option to dispose of PCB/radioactive waste in a waste management unit licensed under the Atomic Energy Act. However, the Agency has concerns that disposal practices at those facilities, while appropriate for radioactive waste, may result in an unreasonable risk to human health and the environment from PCBs ≥50 ppm disposed of at such sites. Therefore, § 761.50(b)(7) provides that any person disposing of PCB/radioactive waste must do so taking into account both its PCB concentration and its radioactive properties. If, taking into account only the properties of the PCBs in the waste (and not the radioactive properties of the waste), the waste meets the requirements for disposal in a facility permitted, licensed, or registered by a State as a municipal or non-municipal non-hazardous waste landfill (e.g., PCB bulk product waste under § 761.62(b)(1)), then the person may dispose of the PCB/radioactive waste, without regard to the PCB component of the waste, on the basis of its radioactive properties in accordance with all applicable requirements for the radioactive component of the waste.

Commenters suggested that sampling and analysis could pose unnecessary costs if the waste were to be disposed of, assuming that it was regulated, especially since the proposal could be read as always requiring analysis. EPA added an option at § 761.50(a)(5) that non-liquid PCBs can be assumed to be ≥500 ppm and disposed of accordingly, rather than analyzed.

EPA also eliminated the proposed requirement to notify disposal facilities receiving PCB remediation waste which will be stored in an area subject to a PCB commercial storage approval and/or disposed of in an area subject to a PCB disposal approval. Pre-disposal notification is still required for all other storage and disposal facilities (see § 761.61(a)(5)(i)(B)(*3*)(*iv*) of the regulatory text). In addition, the subpart K notification and manifesting requirements do not apply to off-site disposal of PCB remediation waste at <50 ppm.

In response to comments, EPA clarified the disposal options for liquid PCB remediation waste, and provided for the disposal of mixed liquid/non-liquid PCB remediation waste. The overall objective of PCB remediation waste disposal is to minimize potential risks of PCB dispersion into the environment from disposal. One way to do so is to remove liquids from mixed liquid/non-liquid waste. Ways to minimize such risks from transportation of waste are on-site PCB remediation waste disposal, or using packaging in compliance with DOT Hazardous Materials Regulations (HMR) at 49 CFR parts 171 through 180. PCBs not subject to the HMR (i.e., PCB wastes at less than 20 ppm or less than 1 pound of PCBs regardless of concentration) must be packaged in accordance with 49 CFR 173.203 (for liquids) or 49 CFR 173.213 (for non-liquids). Therefore, EPA is requiring on-site, phase separation of mixed liquid/non-liquid PCB remediation waste unless protective packaging for liquids is used for off-site shipment.

vi. *Cleanup verification*. The final rule clarifies that the scope of subpart O (proposed Appendix II) includes verifying that bulk PCB remediation waste or porous surfaces at a site have been properly cleaned up in accordance with § 761.61(a). EPA added options, including compositing, to the cleanup verification sampling in subpart O. Cleanup verification sampling for non-porous surfaces is addressed in subpart P. These subparts may not be used to make conclusions or extrapolations about PCB concentrations outside of the area which has been cleaned up and verified based on the results of that sampling. EPA also added a third dimension to the verification procedure to ascertain if the cleanup captured vertical waste migration. Subpart O applies only to bulk PCB remediation waste and porous surfaces left at the original cleanup location. Non-liquid, non-metal PCB remediation waste to be shipped off-site must be sampled in accordance with subpart R.

EPA did not propose to allow compositing on the grounds that compositing can dilute hot spots, but commenters pointed out that hot spots should have been eliminated in the contamination removal process. EPA agrees, and therefore the final rule provides for the compositing of samples. For example, EPA has changed the minimum number of samples from three, to one composite of three. For liquids, no compositing is necessary because they mix naturally and are easily homogenized by stirring.

Subpart O provides two sampling options for large sites. The first option is designed to address sites having a single point source, many point sources, or an unknown number of sources, of contamination. The second option only addresses sites having a known single point source of contamination. Both options use a square grid structure and grid interval, which has been enlarged to correspond to the largest interval provided in the PCB Spill Cleanup Policy. Both options specify compositing of adjacent samples of the same size, provide the maximum number of samples which can be composited, and require that composited samples be mixed thoroughly and subsampled before chemical analysis.

EPA revised the requirement to reclean an entire site based on a single sample's failure to meet cleanup levels. As revised, when a composite fails to meet the cleanup requirements, the area that must be recleaned and reanalyzed is an area larger by a grid interval than the area represented by the failing composite.

Subpart P provides sample site selection procedures for non-porous surfaces, as well as procedures for analyzing the samples and interpreting the results of the sampling. Subpart P applies to all non-porous surfaces destined for disposal, regardless of whether the disposal will take place on-site or off-site.

EPA also provided in subpart Q a test for qualifying an alternate extraction and chemical analysis procedure for determining PCB concentrations in PCB remediation waste in initially characterizing the cleanup site and for post cleanup verification.

vii. *Cap requirements*. In the NPRM, EPA used the term ''non-porous'' to describe concrete used as a cap over non-liquid PCB remediation waste left on-site. At § 761.61(a)(7), EPA has replaced descriptions of cap materials with performance criteria, which essentially paraphrase cap requirements from § 264.310(a) of the RCRA regulations. EPA recommends that the owner of a cleanup site containing a cap visually inspect the cap monthly in perpetuity for breaches such as leaks, cracks, breaks, and faults. EPA increased the amount of time allowed to repair a break in a cap to allow additional time to technically and physically begin repairs in remote areas.

viii. *Deed restrictions for caps, fences, and low occupancy areas*. Commenters worried about potential risks from a site which was cleaned to low occupancy area standards being converted to a high occupancy area use. In response, at § 761.61(a)(8), EPA added deed restriction requirements from the RCRA landfill closure regulations, which includes requirements for converting the land use which addresses situations such as the change from a low occupancy area to a high occupancy area.

ix. *Recordkeeping*. EPA finalized § 761.61(a)(9) as proposed.

b. *Performance-based option*. The NPRM included high-temperature incinerators, high efficiency boilers, chemical waste landfills, and alternate destruction technologies approved by EPA as performance-based disposal options for PCB remediation waste. These options have been retained in the final rule.

The final rule at § 761.61(b)(3) also allows material containing <50 ppm PCBs that has been dredged or excavated from waters of the United States to be managed and disposed of in accordance with a permit that has been issued under section 404 of the Clean Water Act or under section 103 of the Marine Protection, Research, and Sanctuaries Act (or the equivalent of such a permit as provided for in regulations of the U.S. Army Corps of Engineers (Corps) at 33 CFR part 320 *et seq*.). These options are available only for dredged material containing PCBs <50 ppm. Dredged material contaminated with PCBs at ≥50 ppm must be managed under one of the other disposal options of § 761.61.

Research has shown that sediments can be the depository for chemicals and other pollutants, including PCBs, discharged into surface waters from both point and non-point sources. Contaminants in sediments can harm aquatic environments and pose a threat to human health. Studies have shown that PCB contamination may occur in all types of water bodies (Ref. 21, Chapter 2.). Dredged material containing PCBs, such as sediments, settled sediment fines, and aqueous decantate from sediment, is included in the definition of ''PCB remediation waste'' and is regulated for disposal under TSCA at the concentration at which it is found.

The Corps bears important national responsibilities regarding dredged material, as a regulatory agency and in constructing and maintaining the Federal navigation system. The Corps dredges approximately 250 million cubic yards of sediment from navigable waterways each year to maintain navigation. The Corps regulates the excavation and placement of another approximately 75 million cubic yards of dredged material by Federal navigation project beneficiaries. Dredged material from those navigation projects is placed in many sites, including ocean waters, estuaries, beaches, rivers, and uplands, including sites associated with beach nourishment and wetlands construction. In addition, the Corps and its associated local sponsors are responsible for a large number of flood control channels, which must be periodically dredged to maintain their capacity to hold and convey flood waters.

Since 1971, EPA and the Corps have worked jointly to develop comprehensive testing and management protocols used to determine suitable alternatives for management and disposal of dredged material. Regulatory programs established under the Marine Protection, Research, and Sanctuaries Act and the Clean Water Act require analysis of alternatives to protect the environment while ensuring economic and engineering feasibility. The testing and management protocols for dredged material developed by the Corps and EPA are used to assess and manage sediments representing the full spectrum of contamination potential. Existing Corps/EPA regulatory authorities and their scientific protocols were developed specifically for dredged material regulation and management.

EPA believes that management and disposal of dredged materials containing <50 ppm PCBs in accordance with the Corps/EPA protocols as provided for at § 761.61(b)(3) will not present an unreasonable risk to health or the environment.

Section 761.61(b)(3) provides a disposal option specific to dredged material containing <50 ppm PCBs. As noted above, dredged material falls within the definition of PCB remediation waste, and as such the other disposal options of § 761.61(a), (b), and (c) are available for management and disposal of dredged material containing PCBs at any concentration, as long as the applicable requirements are met.

c. *Risk-based option*. Section 761.61(c) allows the EPA Regional Administrator to approve case-by-case, risk-based cleanup, storage, or disposal of PCB remediation waste as an alternative to § 761.61(a) or (b). Commenters asked EPA to codify a public comment and/or participation process. EPA intends to use the public comment process in use in each respective EPA Regional PCB program office.

d. *Disposal of PCB sewage sludge*. Land application of sewage sludge containing <50 ppm PCBs is ''use'' under TSCA section 6(e), and is authorized under § 761.20(a)(4). Use of sewage sludge containing ≥50 ppm PCBs is prohibited (see Unit IV.B.1.b. of this preamble). Disposal of sewage sludge containing less than 50 ppm PCBs, including application as a landfill cover, is unregulated under TSCA. Sewage sludge containing ≥50 ppm PCBs, defined as ''PCB sewage sludge,'' must be disposed of pursuant to § 761.61. In addition, regulations at 40 CFR part 503 or part 257 may apply to use and disposal of sewage sludge containing <50 ppm PCBs, including sewage sludge that is PCB remediation waste. As mentioned in the exceptions for the use of sewage sludge at § 761.20(a)(4), PCBs in sewage sludge regulated for disposal under TSCA may not be diluted for purposes of avoiding the PCB disposal regulations.

9. *PCB bulk product waste (non-remediation waste)*. In the NPRM, EPA identified certain PCBs and PCB Items coming out of service for disposal as PCB Non-Remediation Waste (see § 761.3 and § 761.62). In today's rule, EPA calls this material PCB bulk product waste, to characterize more accurately its source and nature. The final rule clarifies at § 761.62 that the wastes addressed are ≥50 ppm PCBs when taken out of service and there are four disposal options for PCB bulk product waste (performance-based disposal, disposal in solid waste landfills, risk-based disposal and disposal as daily landfill cover or roadbed). The final rule at § 761.65(c)(10) addresses temporary on-site storage of this waste. Under § 761.62(c), EPA may issue alternate storage approvals for PCB bulk product waste on a case-by-case basis.

a. *Performance-based disposal*. In response to comments seeking consistency with PCB remediation waste disposal, EPA added RCRA

Subtitle C landfills as a disposal option for PCB bulk product waste because they are designed and operated in the same manner as TSCA chemical waste landfills (see § 761.62(a)(3) of the regulatory text). EPA also added alternate disposal pursuant to § 761.60(e), decontamination pursuant to § 761.79, thermal decontamination pursuant to § 761.79(c)(6), and a coordinated approval pursuant to § 761.77 (see §§ 761.62(a)(4), (a)(5), (a)(6), and (a)(7) respectively of the regulatory text).

b. *Disposal in solid waste landfills (leachability-based option).* In the NPRM, EPA presumed that some PCB bulk product wastes met the leachability based-standard of <50 parts per billion (ppb) PCBs (see proposed § 761.62(b)). Other PCB bulk product wastes could be tested using the Toxicity Characteristic Leaching Procedure, Method 1311 in ''Test Methods for Evaluating Solid Waste, Physical/Chemical Methods,'' EPA Publication SW-846 (the TCLP test) to determine the leachability of PCBs in the waste.

In today's final rule, EPA has not retained the TCLP as the definitive test because commenters indicated that it was not accurate and EPA prefers to set performance standards without prescribing test methods. Instead, EPA has provided two different landfill disposal options for PCB bulk product waste. PCB bulk product waste containing PCBs which are tightly bound within the matrix of PCB bulk product wastes and bulk product waste which leaches <10 μg/L measured using a procedure used to simulate leachate generation may be disposed of in municipal or non-municipal non-hazardous waste landfills (§ 761.62(b)(1)). PCB bulk product waste containing PCBs which are not bound in a solid matrix may be disposed of in landfills which segregate the wastes from organic liquids which could mobilize the PCBs and which collect leachate generated from the landfill cell and monitor it for PCBs (see § 761.62(b)(2) of the regulatory text). Disposal of these materials in accordance with the conditions specified in § 761.62(b) would not result in release of toxicologically significant concentrations of PCBs to the the ambient environment, including ground water. Therefore, EPA has determined that such disposal does not present an unreasonable risk of injury to health or the environment (Refs. 22 and 23).

While EPA is still requiring leach testing for certain materials disposed of in a municipal or non-municipal non-hazardous waste landfill (see § 761.62(b)(1)(iii)), EPA has reduced the level of PCBs in the aqueous leachate from 50 to 10 μg/L (approximately 10 ppb). This change is based on comments that the solubility of two major Aroclor components, 1254 and 1260, is generally less than 50 ppb. Thus false negatives concerning the presence of leachable PCBs (PCBs not bound up in the matrix of the waste) would result if EPA retained 50 ppb as the regulatory level.

It is not always necessary to determine the PCB concentration or leaching characteristics of PCB bulk product waste. For example, under § 761.62(b)(1)(i) certain PCB bulk product waste may be disposed of in a facility permitted, licensed, or registered by a State as a municipal or non-municipal non-hazardous waste landfill regardless of its PCB concentration. Under § 761.62(b)(4), the disposer would have to notify the disposal facility that the waste may contain PCBs ≥50 ppm, but could do so based on application of a general knowledge of the waste stream (or similar material) to report the PCB concentration. If the disposer could not base the § 761.62(b)(4) notice on general knowledge of the PCB concentration of the waste, and needed to sample the waste, however, the disposer would have to use subpart R or another sampling method approved under § 761.62(c). It would also be necessary to use subpart R or § 761.62(c) for purposes of disposal of PCB bulk product waste in accordance with § 761.62(a)(4) in a facility having an upper limit on PCB concentration which can be disposed using the approval.

Generators of PCB bulk product waste must provide prior notification to PCB waste management facilities not having commercial PCB storage or disposal approvals. The notice must state that the PCB bulk product waste may include components containing PCBs at ≥50 ppm. There are three options for determining the concentration of the waste: analysis of a representative sample of the waste in the shipment selected in accordance with subpart R; application of a general knowledge of the waste stream (or similar material) based on prior testing by the disposer or others; or the presumption that the unsampled, unanalyzed waste contains ≥500 ppm PCBs (see § 761.50(a)(5)). For PCB bulk product waste disposed of under § 761.62(b)(1), the notice must state that the waste is known or presumed to leach <10 μg/L PCBs. For PCB bulk product waste disposed of under § 761.62(b)(2), the notice must state that the waste is known or presumed to leach ≥10 μg/L PCBs.

In addition, § 761.62(b)(4) requires different notification procedures for waste disposed of under § 761.62(b)(1) than for waste disposed of under § 761.62(b)(2). For waste disposed of under § 761.62(b)(1), notice is required only in advance of the first shipment from the same disposal waste stream. For example, a new notice would be required where a shredding operation changed its feedstock from automobiles to plastic-insulated electrical cables or to white goods (i.e., household appliances or industrial appliances, such as refrigerators, ranges, washers, and water heaters). A disposer of demolition waste would have to submit a new notice for demolition waste from a new demolition project. For example, where a disposer was delivering waste from a demolition project in more than one load, a notice would not be required for each load from that project. Where the disposer began delivery of waste from a different demolition project, a new notice would be required. For waste disposed of under § 761.62(b)(2), notice is required in advance of the first shipment from the same disposal waste stream and with each subsequent shipment.

Also, part 761, subpart K does not apply to PCB bulk product waste disposed of under § 761.62(b).

Under current rules at § 761.60(b)(2)(ii), intact and non-leaking PCB small capacitors may be disposed of as municipal solid waste. Automobile and appliance shredder fluff may be disposed of in a municipal or non-municipal non-hazardous waste landfill as PCB bulk product waste only if it does not contain shredded PCB small capacitors. If a capacitor is shredded, the PCBs are no longer enclosed within the capacitor and must be disposed of under § 761.62(a) or (c).

c. *Risk-based option.* Section 761.62(c) sets out the procedure EPA will use for issuing risk-based storage or disposal approvals for PCB bulk product waste. EPA will evaluate each application for a risk-based approval and its supporting information to determine whether the proposed storage or disposal methods or locations would pose an unreasonable risk of injury to health or the environment. To allow flexibility, the final rule does not specify the criteria EPA must use in this evaluation. However, examples of such criteria could be: (1) The nature and quantity of the wastes; (2) the proposed alternate design and operation; (3) the hydrogeologic setting of the unit, including attenuative capacity and thickness of the liners and soils present between the pile and ground water or surface water; and (4) any other factors

which would influence the quality and mobility of the leachate produced and its potential to migrate to ground or surface water.

d. *Disposal as daily landfill cover or roadbed*. EPA received comments on using automobile shredder waste as a daily landfill cover or under asphalt as part of a road bed. EPA considers these activities as disposal rather than use, and under § 761.62(d) will allow shredder waste to be disposed of in a landfill as the final daily cover, if it remains in the landfill and is not released or dispersed by wind or other action or may be disposed of under asphalt as part of a road bed. Because these disposal options have been restricted to materials that do not leach and because other potential routes of exposure have been controlled, EPA has concluded that the risk from these disposal options is the practical equivalent of disposal in a landfill as required in § 761.62(b)(1), and therefore that this risk is not unreasonable. Both of these potential disposal approaches can also be addressed in a risk-based disposal application under § 761.62(c).

e. *Sampling (subpart O)*. EPA redesignated Appendix III as subpart O, and reorganized it to have three levels of random sampling: collecting a representative 19-liter (5 gallon) bucket of waste from the population, selecting one quarter of this 19 liters for particle size reduction, and selecting a subsample of the reduced particle size fraction for chemical analysis. Use the procedures specified in subpart R to sample non-liquid, non-metal PCB bulk product waste or non-liquid, non-metal PCB remediation waste to be disposed of off-site when it is necessary to analyze the waste to determine PCB concentration or leaching characteristics for storage or disposal. Subpart R includes procedures for sampling waste which is continuously generated and previously generated waste. However, § 761.50(a)(5) allows non-liquid PCBs to be land disposed without regard to otherwise-applicable sampling requirements by presuming that the PCBs disposed of are ≥500 ppm (or ≥100 μg/100 cm^2 if no free-flowing liquids are present).

Some commenters provided specific sampling plans to address the objectives in the proposed rulemaking. EPA incorporated some aspects of these plans into subpart O. However, these plans relied on judgement sampling, which has an inherent bias. To avoid the bias, EPA has substituted sample selection procedures which use random numbers.

10. *PCB household wastes*. EPA raised the issue in the ANPR and NPRM, of whether it should create an exclusion from the disposal requirements for PCB household waste. Although some commenters questioned whether such an exclusion was needed, most supported the idea, and suggested that EPA develop a TSCA exclusion that is identical to the RCRA household waste exclusion at 40 CFR part 261.4(b). EPA agrees that the provision at § 761.63 should be modified to more closely parallel the RCRA exclusion.

In the NPRM, EPA defined PCB household waste as:

> PCB waste that is composed of unwanted or discarded household items that contain PCBs, come from private residences and are commonly found in private households, including individually owned or rented units of a multi-unit construction. Wastes created during renovation and demolition projects are not PCB household wastes except for paint on surfaces. Renovation or demolition projects include, but are not limited to, the conversion of industrial property to residential units or the remodeling of hotels, motels, or multiple rental units.

Several commenters suggested that EPA should expand the definition to include wastes from commercial office buildings, automobiles, and other vehicles found in private households regardless of the source, and renovation wastes from private homeowners. In addition, they encouraged EPA to eliminate distinctions it created between transient and permanent settings. Many commenters did not accept the distinctions that EPA had drawn between the TSCA and RCRA exclusions as valid.

EPA has modified the definition for PCB household waste to read as follows:

> PCB waste that is generated by residents on the premises of a temporary or permanent residence for individuals (including individually owned or rented units of a multi-unit construction), and that is composed primarily of materials found in wastes generated by consumers in their homes. PCB household waste includes unwanted or discarded non-commercial vehicles (prior to shredding), household items, and appliances or appliance parts and wastes generated on the premises of a residence for individuals as a result of routine household maintenance by or on behalf of the resident. Bulk or commingled liquid PCB wastes at concentrations of 50 ppm or greater, demolition and renovation wastes, and industrial or heavy duty equipment with PCBs are not PCB household wastes.

Two criteria applicable to the RCRA household waste exemption must also be satisfied for the TSCA PCB household waste exclusion: (1) The waste must be generated by individuals on the premises of a temporary or permanent residence for individuals, and (2) the waste must be composed primarily of materials found in the wastes generated by consumers in their homes (49 FR 44978, November 13, 1984). As a result, waste from sources such as commercial office buildings are not subject to the exclusion. EPA did not include a comprehensive listing of the structures that could serve as temporary or permanent residences in the TSCA definition. Nonetheless, residences covered by the RCRA exclusion at § 261.4(b)(1) (e.g., single and multiple residences, hotels and motels, bunkhouses, ranger stations, crew quarters, campgrounds, picnic grounds and day-use recreation areas) are included under the TSCA PCB household waste exclusion.

EPA has determined that the PCB household waste exclusion will not result in an unreasonable risk of injury to health or the environment. Due to their age, many of the PCB-containing items that would be found in consumer households have been disposed of by now. As a result, few household items are likely to contain PCB capacitors (e.g., certain refrigerators and household freezers, room and central air conditioners, heat pumps, furnace blowers, fluorescent lighting ballasts and microwave ovens), and the disposal of those which remain in service will occur in a random, geographically dispersed manner. Further, non-liquid PCBs found in household items will most likely be bound in a solid matrix. EPA has taken precautions not to include in the PCB household waste definition regulated PCB liquids (i.e., ≥50 ppm PCB), demolition or renovation waste, and industrial or heavy duty PCB equipment. Only those municipal collection programs and treatment and storage facilities that can satisfy the PCB household waste exclusion criteria will be able to operate under that exclusion. The ultimate disposal of PCB household wastes is regulated; that is, these wastes cannot be abandoned, for instance, on an empty lot. EPA believes that PCB household waste managed in accordance with these requirements will not result in environmental releases of PCBs.

Homeowners will commonly utilize their local hazardous waste collection programs to dispose of unused paint, some of which may contain PCBs. Typically the homeowners bring in liquids in 1 or 5 gallon buckets which are consolidated into drums at the collection point and forwarded to a waste handling facility where they are tested before mixing with other similar wastes. Bulk liquids with a concentration of less than 50 ppm may then enter the waste oil/solvent

recycling stream and be used for fuel blending purposes. Rather than allow the waste management facility to treat bulk liquids containing 50 ppm PCBs or greater as unregulated wastes, EPA is requiring that these liquid PCB wastes be handled as regulated PCB waste (i.e., ≥50 ppm); therefore, regulated levels of bulk liquid PCB wastes are explicitly excluded from the household waste definition. EPA believes that regulated bulk or commingled liquid PCBs should be managed in high efficiency boilers or incinerators, as appropriate.

Further, EPA is not adopting the recommendation to include renovation and demolition wastes within the exclusion, since these wastes are not generated by consumers in their homes. However, wastes generated as the result of routine household maintenance (as opposed to renovation, construction or demolition activities) regardless of whether the activity is conducted by the homeowner or a contractor, would be considered PCB household wastes. Routine household maintenance would include, for example, stripping and repainting residential walls, and small home maintenance or repair projects such as removing/replacing PCB-containing articles from residential units. This approach is in alignment with existing policies for the RCRA household waste exemption. EPA has indicated that it does not consider wastes from debris produced during building construction, renovation, or demolition in houses, or other residences to be similar to those generaged by a consumer in the home during the course of daily living (49 FR 4478, November 13, 1984). (Refs. 24 and 25). Therefore, the risk considerations are not the same as for materials falling within the definition of PCB household wastes. The disposal of these materials is regulated under § 761.62.

Commenters from the scrapping industry wanted EPA to broaden the scope of the proposed PCB household waste exclusion to allow the processing of items traditionally received by that industry. Instead, elsewhere in this rule (see § 761.79(b)), EPA recognizes certain activities traditionally conducted by the scrapping industry (e.g., chopping, stripping insulation, and scrapping) as forms of decontamination and states that those activities do not require a TSCA disposal approval. Waste generated as a result of those processes generally is regulated as PCB bulk product wastes and must be disposed of in accordance with § 761.62.

Another commenter stated that PCB capacitors in residential furnaces should be managed as PCB household waste at the time of disposal. EPA agrees. Other appliances that may contain PCB small capacitors include, but are not limited to, refrigerators and household freezers, room and central air conditioners, heat pumps, furnace blowers, fluorescent lighting ballasts and microwave ovens. These items, although they contain PCBs, may be handled as PCB household waste under the TSCA exclusion and disposed of through a municipal hazardous waste collection program.

EPA also received a request to clarify its intent regarding entities that accumulate capacitors for disposal at TSCA facilities, for instance, utilities that collect capacitors from households. As indicated in the preamble discussion regarding the disposal of PCB small capacitors, the Agency is not changing the disposal requirements for intact and non-leaking PCB small capacitors; e.g., individuals other than manufacturers of PCB capacitors and/or PCB Equipment may dispose of small capacitors as municipal solid waste. (Leaking PCB small capacitors are regulated waste and are required to be disposed of by a method approved under TSCA.) EPA applauds the activities of those entities who collect and accumulate household capacitors for disposal in TSCA-approved facilities and encourages those entities to continue their collection and disposal efforts.

11. *Wastes from R&D activities, including chemical analysis of PCBs.* EPA proposed disposal requirements for waste generated during the process of chemical analysis. In response to comments, EPA clarifies that § 761.64 addresses laboratory wastes from R&D activities authorized in § 761.30(j) as well as the chemical analysis required in part 761, including §§ 761.30, 761.60, 761.61, 761.62, and 761.79. EPA believes that these two types of activities present similarly minimal risk because of the quantities and concentrations of the waste and the controlled environments in which the activities take place.

Commenters sought to increase the maximum waste quantities approved for disposal in a State-approved solid waste landfill, because larger laboratories generate more waste than the maximum allowance and because the small amounts of waste at issue would be difficult to track on an annual basis. The intent of the minimum quantity was to provide some regulatory relief for individuals who generate small quantities of PCB waste, and provide incentives to minimize PCB laboratory waste generation. Based on these comments, EPA has determined that the cost of recordkeeping to demonstrate compliance with the annual maximum amounts is not justified in terms of the potential increment of additional waste above those amounts that would be disposed of each year. Therefore, EPA has deleted the annual limit of 54 cubic feet in volume or 1,000 kg in weight from the final rule. EPA still encourages all disposers to practice waste minimization.

12. *Restructuring disposal technology requirements.* While many commenters supported the proposed disposal technology requirements, they stated that the proposed rule structure was confusing. Therefore, in addition to adding the proposed disposal technolgies, EPA reorganized subpart D to make the varius provisions easier to locate. For example, EPA moved the technical and performance requirements for high efficiency boilers, formerly in § 761.60(a)(2) and (a)(3), to new § 761.71; and moved the requirements for industrial furnaces, proposed at § 761.60(a)(4), to new § 761.72. Incinerator and chemical waste landfill technical requirements remain in §§ 761.70 and § 761.75.

F. Storage for Disposal

1. *One-year time limit and extensions.* EPA proposed to allow extension of the 1-year time limit for storage and disposal where the persons storing the waste had been unsuccessful in their continuing attempts to dispose of or secure disposal for their waste. EPA also proposed to allow extension of the 1-year time limit as a condition of a PCB disposal approval, based on such factors as lack of disposal capacity, the absence of a treatment technology, or insufficient time to complete the treatment or destruction process.

In today's rule, criteria for extending the 1-year time limit for storage and disposal are being finalized as proposed with two changes. First, PCB/radioactive waste removed from service for disposal is excluded from the 1-year storage for disposal requirement provided that continuing attempts to dispose of the waste are documented and the waste is managed in accordance with all applicable Federal, State, and local laws and regulations. PCB/radioactive waste that is exempt from the 1-year storage for disposal time limit pursuant to § 761.65(a)(1) is also exempt from the exception reporting requirements of paragraphs (c), (d), and (e) of § 761.215 (the provisions pertaining to the One-year Exception Report).

In addition, many commenters objected to initiating disposal decisions 30 days after waste had been placed in storage for disposal, as proposed in § 761.65(a)(2)(iv). EPA did not intend

that generators make disposal decisions within 30 days from the date their waste was first placed into storage for disposal. In the past, the Agency has allowed generators 9 months (270 days) in which to get their wastes to disposers and 90 days for disposers to dispose of the PCB waste as outlined in Office of Enforcement and Compliance Assurance TSCA Compliance Program Policy 6-PCB-6. In this final rule, as a condition of obtaining a 1-year extension, the Agency is requiring generators to demonstrate continuing attempts to obtain disposal for PCB wastes 270 days after first placing their waste into storage for disposal.

2. *Facility requirements*—a. *Temporary storage of PCB liquid at 500 ppm or greater*. Current § 761.65(c)(1)(iv) allows temporary storage, in an area that does not meet the requirements of § 761.65(b), of PCB Containers filled with liquid containing between 50 and 500 ppm PCBs for up to 30 days from the date the liquids were removed from use. EPA proposed to amend that section to allow temporary storage of PCB containers filled with liquid containing PCBs at concentrations of 500 ppm or greater.

Several commenters asked that EPA extend the temporary storage period from 30 to 90 days. The Agency originally proposed to allow temporary storage of liquids greater than or equal to 500 ppm PCBs because of generators consolidating PCBs prior to shipment to a disposal facility. Since these consolidating activities were believed to be of a short duration, EPA did not propose changes to the 30–day time limit. EPA continues to believe that a 30–day time limit is appropriate and therefore did not change it.

EPA is finalizing the 30-day temporary storage provision for liquid PCBs at 50 ppm or greater, provided a Spill Prevention Countermeasure and Control (SPCC) (40 CFR part 112) plan is in place and the liquid waste is in stationary bulk storage tanks (including rolling stock such as tanker trucks as specified by the Department of Transportation (DOT)) or packaging authorized in the Hazardous Materials Regulations (49 CFR parts 171 through 180) (see § 761.65(c)(1)).

b. *Storage of large PCB capacitors and PCB-Contaminated equipment on pallets next to a qualified storage area*. EPA proposed to delete the provision allowing pallet storage at § 761.65(c)(2). EPA reasoned that the phaseout date (October 1, 1988, § 761.30(1)) for most uses of PCB Large High Voltage Capacitors had passed, and additional storage space for this equipment was no longer needed. EPA also reasoned that this provision was no longer needed for PCB-Contaminated Electrical Equipment because it is typically drained prior to disposal and the drained hull or carcass is not subject to § 761.65.

Commenters unanimously disagreed, indicating that pallet storage is still widely used. Many proactive companies in the electrical utility industry and elsewhere have either reclassified their PCB Transformers to less than 500 ppm PCB or have disposed of these units, leaving the vast majority of their existing inventory of transformers in the 50 to 499 ppm PCB range or lower. When these units are taken out of service for disposal they are stored on pallets prior to draining. In addition, many large capacitors removed from restricted access areas are stored on pallets prior to disposal. Commenters also pointed out that eliminating this provision would create undue hardship by forcing them to either expand their existing storage areas or to ship this waste to another location. Therefore, EPA is not deleting the pallet storage provisions from § 761.65(c)(2).

c. *Alternate storage of PCBs*. EPA proposed to modify § 761.65(b)(2) to allow the storage of PCBs and PCB Items designated for disposal in waste management units permitted by EPA under section 3004 of RCRA or by a State authorized under section 3006 of RCRA to regulate the management of hazardous waste in containers. The proposed rule would also have allowed the storage in units otherwise regulated by a State under a TSCA look-alike law or approved as part of a PCB disposal approval. EPA reasoned that the RCRA requirements for permitted container storage units would provide an equal level of protection as the TSCA requirements, and preclude an unreasonable risk of injury from PCBs. Both require recordkeeping, waste tracking, secondary containment, monitoring for leaks, inspections, and financial assurance and closure requirements. The proposal did not extend to units operating in interim status under RCRA. The proposal would also have allowed PCBs, especially large volume wastes otherwise required to be stored in compliance with this section, to be stored under the terms and conditions specified in a PCB disposal approval.

Commenters generally favored the proposal, but some wanted EPA to adopt other RCRA provisions, such as storage in facilities with interim status and the 90-day accumulation period allowed for generators under 40 CFR 262.34. EPA's criteria for allowing PCBs to be stored other than in a facility approved under § 761.65(d) are that the permit must cover the management of PCBs and have a financial assurance mechanism. EPA is not allowing the storage of PCB waste in RCRA facilities operating under interim status because the interim status permit only applies to hazardous wastes and not to PCBs. Therefore, there would be no financial assurance to cover corrective action pursuant to 40 CFR 264.101.

EPA is also adding three other scenarios where PCB waste could be stored without a formal approval under § 761.65(d) or meeting the design criteria of § 761.65(b). The first two scenarios are facilities that are granted risk-based storage approvals under § 761.61(c) (PCB remediation waste) or § 761.62(c) (PCB bulk product waste). In both cases, the application for the storage approval must include information, based on technical, environmental, and other considerations, that the proposed storage method will not pose an unreasonable risk to human health or the environment. The third scenario is where a facility has a TSCA PCB Coordinated Approval, which includes provisions for storage, issued pursuant to § 761.77.

Any PCB waste spilled while stored at a RCRA facility must be cleaned up in accordance with the PCB Spill Cleanup Policy (40 CFR part 761, subpart G).

d. *Revision to storage unit criteria*. EPA amended § 761.65(b)(1)(iv) for consistency with the new definition of ''porous surface'' at § 761.3 which includes concrete and cement. The existing rule, which refers to Portland cement and concrete as ''impervious,'' would have been inconsistent with the definition of ''porous surface.'' These references are not being deleted, however, because this would cause all existing storage units that have used Portland cement or concrete to be out of compliance. Section 761.65(b)(1)(iv), as amended, requires a storage facility to have ''floors and curbing constructed of Portland cement, concrete, or a continuous, smooth, non-porous surface as defined at § 761.3 of this part, which prevents or minimizes penetration of PCBs.'' EPA recommends, however, that nonporous surfaces be used for curbing and flooring for storage units since cleanup of non-porous surfaces is easier and less costly. EPA also recommends that porous surfaces be rendered non-porous by coating them with an epoxy sealant.

3. *DOT containers for storage of PCB waste*. EPA is adopting DOT container requirements for PCB storage, transportation, and disposal (see §§ 761.60(b)(2)(vi) and 761.65(c)(6)), by eliminating citations to specific

container type and cross-referencing the new performance-based DOT Hazardous Material Regulations (HMR) container requirements (see 49 CFR parts 171 through 180).

While this change will simplify regulatory compliance, individuals must keep in mind that EPA regulates storage of PCB waste in non-transportation situations, and additional marking requirements at § 761.40 are still in effect. In addition, because of the anti-dilution provision at § 761.1(b)(5), EPA may regulate PCB waste at a much lower concentration than DOT. Therefore, EPA may require some PCB waste not subject to the DOT regulations (i.e., less than 20 ppm or <1 pound of PCBs regardless of concentration) to be packaged in accordance with the DOT HMR (e.g., 49 CFR 173.203 (for liquids) or 173.213 (for non-liquids)), that is, in DOT authorized containers.

PCBs are listed in Packing Group II of the Hazardous Materials table at 49 CFR 172.101. However, under the HMR, PCBs that are transported by highway or rail need only be packaged pursuant to Packing Group III. PCB/radioactive waste, PCB/mixed waste, and PCB/hazardous waste not packaged in accordance with the HMR are not allowed to be transported. Additionally, the HMR as amended on December 21, 1990 (55 FR 52402) prohibits the construction of DOT specification packaging previously designated for PCB waste storage (i.e., DOT Specification 5, 5B, 6D, 17C, 17E, and 17H containers) effective October 1, 1994. Further, transportation of PCBs in these outdated DOT specification containers is not authorized beyond September 30, 1996, unless they were filled prior to, and not emptied and refilled after, October 1, 1996 (see 49 CFR 171.14(a)(2)).

Several commenters argued that EPA should continue to allow the use of these old DOT specification containers for storing PCBs in situations not subject to DOT regulations. Some companies have invested in inventories of these old specification containers that would be expensive to replace. The Department of Energy noted that it has large quantities of non-fissionable PCB/radioactive waste in storage that would have to be repackaged. EPA relied for many years on the stringent standards in the old DOT specifications, and believes the continued use of containers meeting these specifications for non-DOT applications will not pose an unreasonable risk to health or the environment. Therefore, EPA is allowing such use to continue at § 761.65(c)(6)(ii).

EPA received comments that it should continue to list at § 761.65(c) all containers authorized by DOT. EPA believes such an approach would defeat EPA's objectives of providing flexibility to industry and minimizing the resource burden associated with updating the PCB regulations each time DOT modifies its requirements. Most commenters supported EPA's proposal to cross-reference DOT regulations instead.

The final rule also amends § 761.60(b)(2)(vi) to conform to the new DOT container requirements. A commenter misunderstood the effect of the change to this section and expressed concern that EPA is making a new allowance for PCB Capacitor disposal at § 761.60(b)(2)(vi). This is not the case. Section § 761.60(b)(2)(vi) is an existing provision which is being modified only with respect to container specifications. Readers of today's final rule should keep in mind that the PCB Capacitors described in § 761.60(b)(2)(vi) of the regulatory text may not be disposed of in a chemical waste landfill unless the Assistant Administrator for Prevention, Pesticides and Toxic Substances first authorizes their disposal pursuant to existing § 761.60(b)(2)(v).

4. *PCB/radioactive waste*. The proposed rule defined ''PCB/fissionable radioactive waste or PCB/radioactive waste'' as ''PCBs regulated for disposal under subpart D of part 761 that also contain fissionable radioactive material or radioactive material subject to regulation under the Atomic Energy Act of 1954 as amended.'' At the suggestion of comments, EPA is clarifying the definition by deleting the reference to ''PCB/fissionable radioactive waste,'' maintaining the term ''PCB/radioactive waste,'' and including PCBs regulated for disposal that also contain source, special nuclear, or byproduct material that is subject to the Atomic Energy Act of 1954 as amended, or naturally occurring or accelerator produced radioactive material.

The Agency also proposed to allow PCB/radioactive waste to be stored for longer than 1 year if the storer requested and received an extension. Several commenters indicated that since there is inadequate disposal capacity for PCB/radioactive waste, EPA should not require generators of such waste to undertake the process of requesting and obtaining 1 year extensions. The Agency agrees and, in addition, has exempted PCB/radioactive waste from the 1 year storage for disposal and exception reporting requirements (see § 761.65(a)).

EPA proposed to allow PCB/radioactive waste to be stored in containers other than those meeting the DOT performance standards and to not require a minimum 6-inch high curbing for PCB/radioactive waste. EPA received no comments on these proposals and they are finalized as proposed (see § 761.65(c)(6)(i) and § 761.65(b)(1)(ii)).

5. *Changes in ownership or operational control*. See Unit IV.M.6. of this preamble.

6. *Dating and inspection of PCB Article Containers*. PCB Articles and PCB Containers must be checked periodically for leaks (see § 761.65(c)(5)), and dated when they are placed into storage (see § 761.65(c)(8)). PCB Article Containers, however, were not included in § 761.65(c)(5) and (c)(8), creating a loophole that allows a storage unit owner to omit dating and inspecting these containers and to circumvent the 1-year storage and disposal time limit. EPA proposed in the NPRM to correct this oversight by replacing the phrase ''PCB Articles and PCB Containers'' with ''PCB Items'' wherever it occurs in § 761.65(c)(5) and (c)(8). The definition of ''PCB Item'' at § 761.3 includes PCB Article, PCB Article Container, PCB Container, PCB Equipment and anything else that contains PCBs. No significant comments were received on this proposal, and EPA is finalizing the modification as proposed.

G. TSCA PCB Coordinated Approvals

In both the ANPR, and the NPRM, EPA solicited comments regarding a provision which would allow it to recognize certain other Federal or State waste management documents governing the storage, cleanup, treatment and disposal of PCB wastes. The reasons for developing such a provision were to eliminate duplicative approval processes (i.e., modifying the requirement to issue a TSCA PCB approval), to foster communications and coordination among Federal and State environmental officials, and to ensure a more efficient use of limited resources. Permits or approvals from other state or Federal programs often are required for the storage or disposal of the PCB waste. For example, placement of dredged material in upland environments is a disposal option at many navigation projects, for environmental and economic reasons. The U.S. Army Corps of Engineers evaluates placement of dredged material in upland facilities, including evaluation of the potential contaminant pathways from the dredged material placement operation. These placement operations are subject to the permit requirements of section 10 of the Rivers and Harbors Act of 1899, taking into account EPA's Clean Water Act section 404(b)(1) Guidelines and the

National Environmental Policy Act (Ref. 26).

Where the dredged material also contained regulated PCBs, its management and disposal would be subject to TSCA. Management and disposal of dredged material containing <50 ppm PCBs, based on a permit or authorization issued by the U.S. Army Corps of Engineers under section 404 of the Clean Water Act or section 103 of the Marine Protection, Research, and Sanctuaries Act, is an authorized disposal option under § 761.61(b)(3). Except in accordance with the self-implementing provisions of § 761.61(a), management and disposal of dredged material with a higher PCB concentration, or material disposed of in an upland facility with no return flow to waters of the United States, would be subject to TSCA approval requirements. The disposer could avoid the requirement to get a separate TSCA approval if a coordinated approval were granted based on a permit issued under the Clean Water Act, Marine Protection, Research and Sanctuaries Act, Rivers and Harbors Act, or other applicable authority.

Under existing requirements, a TSCA PCB approval is required generally for the commercial storage and disposal of PCB wastes at 50 ppm or greater. There are, however, limited scenarios where a TSCA PCB approval is not applicable, such as the on-site cleanup and disposal of PCBs under the CERCLA Superfund program.

Some commenters supported the coordinated approval provision, because ''better coordination with existing State authorities should be encouraged'' and ''greater flexibility will be provided to generators for the disposal of PCBs,'' but they also identified concerns. Of those in favor, most preferred the self-implementing approach over the interactive procedures, believing that a detailed TSCA review of permitted RCRA or State PCB program activities is not necessary. EPA has retained the interactive approach to ensure that a review under the TSCA authority is accomplished prior to, rather than after, the initiation of the proposed PCB disposal activity. A prior review was not included in the self-implementing approach, which would have allowed individuals to commence their PCB disposal activities immediately after completing three steps: obtaining an EPA identification number (or confirming an existing number), notifying the EPA Regional Administrator of their preference to use another waste management document, and receiving written confirmation from the EPA Regional Administrator that the notice had been received. Although a detailed review may not be necessary, the Agency believes the success of the coordinated approval process lies in appropriate coordination and consultation with the other waste management authority to ensure few opportunities exist for the mismanagement of PCB wastes. Therefore, EPA chose the interactive approach because the Agency believes that the costs of the additional administrative requirements are outweighed by the increased level of environmental protection possible under this approach.

One commenter cautioned EPA about losing its ability to exercise national oversight over the PCB program if hybrid State permits replace TSCA permitting requirements. A slightly different point of view was expressed by one commenter who suggested that Federal oversight should be kept to a minimum if States choose to address PCB wastes using State authorities. Other commenters opposed the proposal as unnecessary and resulting in: (1) Differential treatment of facilities currently holding TSCA approvals (i.e., not all facilities would be held to the same standards); (2) confusion regarding TSCA and RCRA labeling and storage requirements placing generators, storers, and disposers in ''double jeopardy''; and (3) State programs which may be more stringent or overly protective.

EPA recognizes that the coordinated approval may not be a perfect solution to the problem of duplicative permitting requirements. To take advantage of the coordinated approval, a facility could rely on a valid waste management permit/approval issued under a Federal law that is administered in whole or in part by the Administrator. Although the standards under these different authorities may vary, they do serve to eliminate or reduce the risks to health or the environment from exposure to PCBs. The process is voluntary; individuals are not required to obtain a TSCA PCB Coordinated Approval. The coordinated approval provision may also be appropriate for PCB waste management documents which have been issued pursuant to regulations that have been promulgated by a State for the disposal of PCBs. Implementation of the coordinated approval process using the interactive approach will ensure the other waste management permit/approval is consistent with the basic principles of the TSCA PCB disposal program.

In regard to the point that States may be more stringent or overly protective, commenters suggested that EPA should preempt State and local standards for PCBs. As stated in the NPRM preamble, TSCA does not allow the Administrator to preempt State disposal rules which describe the manner or method of disposal of a chemical substance or mixture, or in this instance, the disposal of PCBs (59 FR 62832).

Although several commenters recognized that the option to regulate the disposal of PCBs at the State level currently exists under either a TSCA look-alike program or an expanded RCRA hazardous waste program, no unanimity existed on which approach was preferred. Some commenters felt the TSCA PCB Coordinated Approval was the equivalent of a Federal mandate. Commenters were not in favor of State PCB programs because of the potential inconsistency in standards and regulatory requirements which could complicate compliance, create confusion, result in higher costs and excessive burden to the regulated community and unnecessarily impede interstate commerce.

Section 761.77 is not a Federal mandate. EPA is not requiring any State to develop a TSCA look-alike program or to expand its RCRA hazardous waste program to include PCBs. However, any State may pursue either option, provided, for TSCA look-alike programs, that the requirements are at least as stringent in the protection of health and the environment as the applicable TSCA requirements, and under expanded hazardous waste programs or any State program that has been approved by EPA, the risks of injury to health or the environment from PCBs are eliminated or reduced by actions taken under those authorities. The TSCA PCB Program is not delegable, and EPA is not delegating responsibility for implementing TSCA section 6(e) to the States. The TSCA PCB Coordinated Approval provides a mechanism for Federal and State environmental officials to better coordinate PCB activities, maximize diminishing resources, incorporate flexibility and reduce oversight of States which demonstrate the ability to monitor PCB activities.

EPA has retained the coordinated approval provision, but has modified it in light of comments. One commenter suggested EPA include a definition for TSCA PCB Coordinated Approval. EPA agrees and has added the definition in § 761.3.

A number of comments questioned the applicability of a TSCA PCB Coordinated Approval at CERCLA remediation sites. Proposed § 761.77(g), which addressed on-site remediation activities conducted under CERCLA, has been deleted. EPA did not intend to suggest that a TSCA approval would be

required for CERCLA on-site remediation and disposal activities.

EPA also clarifies that revocation of a TSCA PCB Coordinated Approval will be based solely on those PCB activities covered by the non-TSCA approval that serve as the technical or legal basis for the coordinated approval, i.e., are related to the management of PCBs. For example, a determination to issue a notice of deficiency or to revoke the TSCA PCB Coordinated Approval may be based on, but is not necessarily limited to: (1) Non-compliance with § 761.77(b) and (c); (2) operation of the approved PCB waste management process in a manner which may result in an unreasonable risk of injury to health or the environment; (3) failure to comply with, expiration of, or revocation of the non-TSCA approval or of the program under which the non-TSCA approval was issued; and (4) for CERCLA off-site actions, lack of completion of requirements conducted pursuant to CERCLA decision and enforcement documents issued by EPA that apply to off-site PCB waste management activities, or failure of the owner, operator or responsible party to comply with conditions of the decision and enforcement documents that apply to PCB waste management activities. EPA also clarifies that before it revokes a TSCA PCB Coordinated Approval, it will, as a matter of policy, consult with the authority that issued the underlying non-TSCA approval. EPA is not required, however, to seek or obtain the agreement or concurrence of the issuing authority prior to revoking a TSCA PCB Coordinated Approval.

Finally, permits issued by regulations found in title 40 of the CFR, such as those authorized under RCRA at § 270.60, may be covered under the coordinated approval provision.

H. Decontamination

In today's rule, EPA is finalizing the decontamination regulations as proposed in § 761.79 with modifications resulting from public comments and EPA's scientific studies. The Agency clarifies that: (1) Decontamination standards and procedures can be used for disposal and decontaminated materials can be distributed in commerce, used or reused; (2) specified decontamination activities no longer need a PCB disposal approval; (3) materials meeting the applicable decontamination standards or procedures are unregulated for disposal under subpart D of part 761; and (4) most wastes and residues from decontamination activities can be managed based on their existing PCB concentration. EPA clarifies that when contaminated PCB materials are sent off-site for decontamination, they must be manifested to a commercial PCB storer or disposer.

In the NPRM (59 FR 62800), EPA proposed for non-porous surfaces the decontamination standard in EPA's Spill Clean-up Policy (i.e., less than or equal to 10 micrograms PCB per 100 centimeters squared), and two non-aggressive decontamination procedures using kerosene as an alternative to decontamination followed by confirmatory sampling. The Agency also proposed to waive TSCA disposal approval requirements for a number of specified decontamination activities while requiring measures to be taken to prevent releases of PCBs to the environment and to protect workers against dermal contact or inhalation. The Agency solicited comment on including distillation as a decontamination activity. After using an EPA specified decontamination procedure, the decontaminated surface would not be regulated for disposal and could be reused except in association with food, feed, or drinking water in accordance with proposed § 761.20(c)(5). The Agency also clarified that disposal of materials used in decontamination, such as abrasives, solvents, and equipment is regulated. EPA further proposed that certain solvents could be disposed of in industrial boilers. Finally, the Agency proposed a decontamination level for water consistent with EPA's drinking water standard to ensure that the reuse of decontaminated water is safe.

The final decontamination regulations at § 761.79 establish measurement-based decontamination standards for removing PCBs from water, organic liquids, non-porous surfaces, concrete, and non-porous surfaces in contact with non-liquid PCBs (including non-porous surfaces covered with a porous surface, such as paint or coating on metal). EPA is finalizing the self-implementing decontamination procedures for non-porous surfaces in contact with mineral oil dielectric fluid (MODEF) and providing a mechanism for allowing other performance-based procedures and solvents to be used in decontamination of materials contaminated with MODEF or other PCB liquids. The final rule clarifies that thermal processes as specified in § 761.72 may be used to decontaminate metal surfaces. Additionally, EPA moved the decontamination of air compressor systems, formerly in § 761.60(b)(5), to the performance-based provisions of § 761.79.

EPA has maintained the general provisions from the proposal requiring persons conducting decontamination activities to protect against direct releases of PCBs to the environment and to protect workers from dermal contact or inhalation of PCBs or materials containing PCBs. Although many commenters felt that these requirements were duplicative of OSHA standards, EPA believes that they are necessary. First, OSHA standards do not apply to all settings where decontamination activities may occur. Second, because EPA is no longer requiring PCB disposal approvals for specified decontamination activities, these general safety standards will ensure there is no unreasonable risk of injury to health or the environment from decontamination activities.

The decontamination procedures in § 761.79 do not apply to all wastes. For example, they do not apply to intact electrical equipment such as transformers, voltage regulators, capacitors, and rectifiers. The surface areas in this kind of equipment are very large and may have numerous laminations with a high contact, low volume space limiting the solvent contact necessary for complete decontamination. In addition, electrical equipment may contain porous components such as wood. Since most porous materials cannot be adequately decontaminated, the decontamination procedures generally do not apply to porous surfaces (except for non-porous surfaces covered with a porous surface, such as paint or coating on metal, which can be decontaminated by removing the paint or coating, leaving only a non-porous surface meeting the standards in § 761.79(b)(3)). Finally, today's decontamination procedures are not appropriate for or applicable to wastes such as soil, debris, and sediments.

Commenters suggested a number of specific decontamination methods. Some also wanted a mechanism for EPA to approve additional methods in the future. EPA has added the distillation of PCBs from contaminated solvents, oil/water separation, and scarification of surfaces to the decontamination procedures under § 761.79 which do not need a PCB disposal approval. The Agency agrees with comments that potential air release concerns associated with distillation will be adequately addressed by the Clean Air Act and RCRA. The decontamination methods no longer requiring a PCB disposal approval now are: chopping (including wire chopping), distilling, filtering, oil/water separation, spraying, soaking, wiping, stripping of insulation, scraping, scarification, the use of abrasives or solvents to remove or separate PCBs from contaminated non-porous surfaces or liquids, or thermal

processes in accordance with § 761.72. Some specific methods mentioned in the comments, such as physical abrasion, surfactant cleaning, and hydroblasting fit these general decontamination categories. EPA did not include some methods suggested by commenters because the efficacy of the suggested method was not demonstrated, or because EPA did not believe there was a way to easily contain a release of PCBs to the environment. The decontamination procedures listed in § 761.79 will not pose an unreasonable risk because the procedures that create the potential for release of PCBs would do so in airborne dust, which can be controlled through standard industrial practices. Section 761.79(e) also requires persons conducting decontamination activities to protect against release of PCBs to the environment and requires workers to wear equipment to protect against dermal or inhalation contact from PCBs. Persons wishing to conduct decontamination methods not covered by § 761.79 must obtain a PCB disposal approval.

EPA is allowing contaminated water to be decontaminated to different concentration levels specified in § 761.79(b)(1) depending on its subsequent use, reuse, or disposal. EPA has finalized the proposed decontamination standard for water of ≤0.5 micrograms PCBs per liter. Under § 761.30(u)(3), water meeting this decontamination standard may be reused without restriction. Many commenters requested a higher standard where water would not be used for drinking water, food or feed, such as when the water would be subject to the Clean Water Act standards for direct or indirect discharges or used as non-contact cooling water in an industrial setting. EPA has responded to these comments by including in § 761.30(u)(4) a provision allowing water containing less than 200 micrograms per liter (approximately 200 ppb), the maximum water solubility of common Aroclor formulations of PCBs, to be used in industrial processes where there is no release from the process (e.g., as a non-contact cooling water). In addition, EPA has specified in §§ 761.50(a)(3) and 761.79(b)(1)(ii) that water containing PCBs may be discharged to a treatment works (as defined in regulations at 40 CFR 503.9(aa) implementing the Clean Water Act) or to navigable waters if the PCB concentration is less than 3 μg/L (approximately 3 ppb), or in accordance with a PCB discharge limit included in a permit issued under section 307(b) or 402 of the Clean Water Act. The processes for regulating discharges under the Clean Water Act are adequate to protect against an unreasonable risk from exposure to PCBs. Where PCBs are not specifically subject to a discharge limit, the final rule incorporates the 3 μg/L level historically used to regulate discharges of PCBs, both in specific PCB disposal approvals under part 761 and in regulations governing industrial processes that recycle PCB-Contaminated raw materials.

The final rule establishes a decontamination standard for organic liquids and non-aqueous inorganic liquids containing PCBs of less than 2 milligrams per kilogram (i.e., <2 ppm PCBs). EPA revised the proposed organic liquids standard from less than 2 milligrams per liter to less than 2 milligrams per kilogram by weight to be more consistent with PCB concentration measurements required in § 761.1(b)(2).

The final rule includes decontamination standards for non-porous surfaces (See § 761.79(b)(3)). The decontamination standard for non-porous surfaces in contact with liquid PCBs at concentrations ≥500 ppm for unrestricted use is ≤10 μg/100 cm^2 and for smelting in an industrial furnace operating in accordance with § 761.72(b) is <100 μg PCB/100 cm^2. Surface PCB concentrations are measured using a standard wipe test as defined at § 761.123. In response to comments, EPA added two decontamination standards for non-porous surfaces in contact with non-liquid PCBs, such as painted or coated metal, after removal of the coating. These surfaces may be decontaminated for unrestricted use in accordance with National Association of Corrosion Engineers (NACE) Visual Standard No. 2, Near-White Blast Cleaned Surface Finish, and decontaminated for smelting in an industrial furnace (operating in accordance with § 761.72(b)) using NACE Visual Standard No. 3, Commercial Blast Cleaned Surface Finish, and verified by visual inspection of all cleaned areas (Refs. 27 and 28).

Under § 761.79(c)(2), the Agency is allowing movable equipment and tools to be decontaminated by swabbing, a double rinse/wash as specified in § 761.123, or another applicable decontamination standard or procedure in § 761.79.

Several commenters sought other provisions available through EPA's Spill Clean-up Policy for cleaning up recent PCB spills, particularly for concrete and other porous surfaces. EPA has added a decontamination standard of ≤10 μg/100 cm^2 for concrete that has been contaminated within 72 hours. EPA has not established decontamination levels for other porous materials such as wood, or for older spills on concrete, because of the likelihood that the materials have absorbed PCBs which cannot be adequately removed. These materials may be used, subject to the use authorization at new § 761.30(p), or disposed of in accordance with 40 CFR part 761, subpart D.

EPA has also finalized the self-implementing decontamination procedures for non-porous surfaces contaminated with MODEF with some modifications (see § 761.79(c)) (Ref. 29). Many commenters wanted to use additional decontamination solvents. EPA has included other organic solvents having similar properties to kerosene in performance-based decontamination options. EPA conducted scientific studies to evaluate decontamination of impervious surfaces with aqueous-based solvents (Ref. 30).

Based on EPA's limited performance-based validation testing, EPA is providing a self-implementing procedure under § 761.79(d)(4) to qualify additional decontamination fluids for decontaminating non-porous surfaces contaminated with MODEF or other PCB liquids (see subpart T). EPA tested several solvents for use in accordance with performance-based decontamination under § 761.79(c)(3) and (c)(4). EPA did not intend its testing to be limiting, but did not test all potential solvents under all potential conditions. EPA only used MODEF as a surface spiking solution for convenience and because it was expected to be one of the most common sources of PCB contamination on surfaces. Testing results indicated that other solvents and other conditions could be acceptable for decontaminating surfaces that are contaminated with PCBs.

The final rule also includes a self-implementing procedure for decontamination of metal surfaces using thermal processes in accordance with § 761.72, depending on the PCB concentration (see § 761.79(c)(6)). Some surfaces decontaminated using these procedures may then be unregulated for disposal or use.

EPA is not finalizing all of the performance-based decontamination procedures for air compressor systems (proposed at § 761.30(i)(3)(i)). Commenters generally stated that the self-implementing procedures for cleaning air receivers and other pressurized large volume tanks by rotation were impracticable, and these provisions are not included in the final rule. Several types of spray equipment for cleaning large volume tanks are on the market, but the potential operating conditions are too varied to allow EPA

to establish uniform, self-implementing protocols. Spraying is, however, an authorized decontamination method under § 761.79(b), as long as the decontamination levels specified in that section are met and confirmed by sampling. In addition, the final rule includes a provision at § 761.79(h) allowing the EPA Regional Administrator to approve decontamination or sampling methods not specifically described elsewhere in § 761.79 based on a finding of no unreasonable risk.

The final rule does include self-implementing decontamination procedures for piping and air lines of air compressor systems. Commenters raised concerns about the use of kerosene and other prescribed conditions for this equipment. In response, EPA is allowing the use of additional organic and aqueous solvents based on data submitted by commenters, and based on EPA's experience with the regulated community's use of these solvents in accordance with PCB disposal approvals issued under § 761.60(e). For decontamination using other solvents or conditions, follow the appropriate provisions of § 761.79(d)(4) and subpart T or seek a PCB disposal approval.

EPA clarifies that self-implementing, performance-based decontamination conducted under § 761.79(c) does not require confirmatory surface measurements (see § 761.79(f)). However, anyone claiming that a surface is decontaminated must be able to substantiate that claim in writing. Subpart N provides sampling procedures for water and organic liquids. Subpart P provides sample site selection procedures for non-porous surfaces and concrete decontaminated from recent spills, as well as procedures for analyzing the samples and interpreting the results of the sampling. When sampling is required for the measurement-based provisions in § 761.79(b), written records must be maintained for 3 years from the date of decontamination. Copies of records may be maintained at the decontamination site or elsewhere as long as they are available to EPA in a timely manner, if requested.

EPA also clarifies that solvents contaminated during use in decontamination are to be managed and used at their existing concentration (see § 761.79(g)). Unless specifically addressed elsewhere, disposal options do not depend on the original concentration of PCBs in the material which is decontaminated. EPA is requiring chlorinated solvents used for decontamination to be disposed of as PCB waste regardless of their concentration in order to discourage their use and to minimize adverse consequences from uncontrolled air releases. However, EPA is allowing chlorinated solvents, other contaminated solvents, liquids, or non-liquids resulting from decontamination activities to be decontaminated to the extent permitted under § 761.79. Hydrocarbon solvents containing <50 ppm PCBs may also be burned and marketed in accordance with the used oil provisions of § 761.20(e). Because used oils are composed primarily of hydrocarbons, burning of hydrocarbon solvents will pose a similar, not unreasonable, risk to burning of used oils. One commenter asked whether hydrocarbon solvents which are also radioactive could be burned for energy recovery under the used oil provisions of § 761.20(e) if the combustion facility was approved or licensed for burning radioactive waste. Today's regulations do not preclude this activity.

Finally, wastes resulting from decontamination activities are subject to applicable manifesting, storage, and disposal requirements for PCB wastes. Facilities conducting decontamination activities must also comply with recordkeeping, reporting, and notification requirements of subparts J and K.

I. Exemptions for Manufacturing, Importing, Processing, Distributing in Commerce, and Exporting PCBs

1. *Class exemption for manufacture, import, processing, distribution in commerce, and export of PCBs for R&D.* EPA proposed the establishment of a class exemption at § 761.80(i) to allow processing and distribution in commerce for R&D of PCBs and PCB analytical reference samples derived from PCB waste material. EPA proposed this class exemption to minimize negative impacts from the relatively time-consuming statutory and regulatory process for individual companies seeking an exemption from the prohibition on processing and distributing in commerce of PCBs.

Overall, commenters agreed with the establishment of a new class exemption to facilitate the use of PCBs in R&D. However, they suggested that EPA and the scientific community would be better served if the class exemption also included the manufacture of PCBs for R&D. EPA agrees and has added manufacture of PCBs to § 761.80(i). EPA has also modified the text of proposed § 761.80(i) to specify that import and export of these materials are also covered by the exemption. All individuals who wish to be included in the class exemption will be required to submit a notification in the form of a petition to the Agency. EPA will treat a renewal request submitted by any one class member 6 months prior to the expiration of the 1-year exemption as a renewal request for the entire class (see the procedures at 40 CFR part 750, subpart C and § 750.31(e)).

EPA is limiting the manufacturing, import, processing, distribution in commerce, and export of PCBs to no more than 500 grams of PCBs annually, packaged in 5 milliliter hermetically sealed containers. EPA is also limiting the processing, distribution in commerce, and export of analytical reference samples derived from PCB waste material to 500 grams of PCBs annually. Individuals wishing to temporarily exceed these limitations must notify the Director, National Program Chemical Division, in writing, of the sites and quantities involved, and provide a justification for an increase. Any increase granted will be in writing and will not extend beyond the time remaining in the exemption year. Persons needing an increase on other than a temporary basis are required to obtain an individual exemption which addresses their specific needs. Until EPA has completed rulemaking on a request for an individual exemption, individuals may continue their PCB activities, but are limited to the constraints of the existing class exemption.

The establishment of the class exemption at § 761.80(i) does not affect any manufacturer, processor, distributor or exporter previously granted an exemption under existing § 761.80(c), (f), (g), or (h). Those individuals will not be required to modify or discontinue the activity for which their exemption was granted at this time. In addition, EPA will consider individuals who have obtained exemptions under § 761.80(c), (f), and (h) to manufacture, process, distribute in commerce, or export PCBs for R&D in quantities of 500 grams or less, to be grandfathered into the class exemption at § 761.80(i) without the submission of a petition at this time. However, if those individuals increase the quantity of PCBs (beyond 500 grams), change the manner of manufacture, processing, or distribution in commerce of the PCBs, or any other aspect of the existing exemption, they must submit a new petition.

EPA is also allowing processors and distributors of PCBs in small quantities for R&D currently authorized by § 761.80(g) to continue their activity unchanged unless they wish to exceed the 100 gram limit. At that time, they can follow the notification procedures of § 761.80(g)(2), or submit a petition

within the § 761.80(i) timeframe, which would allow them to increase their limit to 500 grams.

Today's rule also allows research and development for PCB disposal under certain conditions (see § 761.60(j)). Processing and distribution in commerce of PCBs associated with R&D for disposal are regulated under existing provisions at § 761.20(c). Persons engaging in processing and distribution in commerce of PCBs for this disposal activity need not request an exemption under § 761.80.

2. *Class exemption for manufacturing PCBs for research and development of disposal technologies*. EPA proposed at § 761.80(e) to establish a class exemption allowing R&D facilities to manufacture (including import) PCBs solely for the manufacturer's own research to develop PCB disposal technologies. This provision has been included in the final rule. For purposes of § 761.80(e), use ''solely in the manufacturer's or importer's own research'' means use by the manufacturer or importer or one of its wholly-owned subsidiaries conducting disposal-related R&D. However, distribution of the PCBs that are manufactured under this exemption to other entities for their R&D activities is prohibited. All PCBs and materials containing PCBs, regardless of concentration, remaining from the disposal-related studies, are required to be disposed of or decontaminated pursuant to the original PCB concentration.

EPA is limiting PCB manufacturing, including import, activities under this exemption to 500 grams (approximately 1 pound (lb)) of PCBs per year. Commenters suggested EPA increase the quantity from 1 lb to 10 lbs to better serve the scientific community in conducting R&D for disposal-related activities. EPA considers 500 grams an ample R&D quantity for a year because PCBs are generally used in extremely small quantities (i.e., micrograms) during these activities. Individuals wishing to exceed this amount on a temporary basis must request and receive approval, in writing, from the Director, National Program Chemicals Division. To ensure that PCB manufacture under § 761.80(e) is being conducted for R&D into PCB disposal, EPA is requiring that the EPA Regional Administrator be notified in writing 30 days prior to the start of R&D activities requiring the manufacture of PCBs. This conforms with the § 761.60(j)(1)(ii) notification requirement.

A person wishing to be included in the class exemption at § 761.80(e) must submit an exemption petition to EPA 60 days prior to engaging in activities under the exemption. Renewals of or modifications to the exemption are required annually pursuant to the interim procedures for manufacturing exemptions at § 750.11 or processing and distribution in commerce exemption at § 750.31. To reduce the paperwork burden of the renewal process for the class, EPA will deem a properly filed renewal request for the exemption by any member of each class as a renewal request for the entire class.

3. *Other exemption issues*. EPA proposed modifications to § 761.80(g) which it is not adopting in today's final rule. One modification correlated with a proposed change in the ''small quantities for research and development'' definition at § 761.3; however, the proposed modification is moot because EPA is not finalizing the proposed definitional change. In addition, EPA intended to expand the existing class exemption at § 761.80(g) to include distribution in commerce for export. However, such distribution in commerce may be conducted under § 761.80(i) as finalized, and additional modification of § 761.80(g) is therefore no longer necessary. Similarly, proposed changes to § 761.80(o) regarding exemption renewals under § 761.80(g) have been rendered moot by changes from the proposal. EPA also is not finalizing proposed modifications to § 761.80(n) regarding renewals of the new class exemption at § 761.80(e); these provisions are in the text of § 761.80(e).

Many of the newly created provisions for exemptions to process and distribute PCBs in commerce direct readers to the petition filing procedures at 40 CFR 750.31. EPA discovered a drafting error in § 750.31(c), ''Content of petition,'' from a previous amendment. Therefore, EPA is promulgating a technical correction to delete references at § 750.31(c)(9) to paragraphs which no longer exist (i.e., ''(d)(1) through (8)'' and ''(d)(1), (3) and (5)''). These references should have been redesignated as paragraphs ''(c)(1) through (8)'' and ''(c)(1), (3) and (5)'' when § 750.31 was amended on April 11, 1994.

To grant an exemption under section 6(e)(3)(B) of TSCA, EPA must find that there is no unreasonable risk of injury to health or the environment from the exempted activity and that good faith efforts have been conducted to find a substitute for PCBs.

EPA finds that the manufacture, import, processing, distribution in commerce, and export of PCBs in accordance with § 761.80(e) and (i) will not result in an unreasonable risk of injury to health or the environment. The risk of environmental release of PCBs or risks of exposure to PCBs is negligible due to OSHA workplace safety regulations, the highly-trained nature of laboratory workers and scientists, the limitation on the volume of production, DOT transportation regulations, and the current marking regulations that require containers to be labeled as containing PCBs (also see the discussion in the NPRM). Finally, all wastes from PCB processing, including diluted PCB materials and any PCB residues or other contaminated media, are subject to the 1-year storage and disposal time limits at § 761.65 and § 761.60 and the manifesting requirements at § 761.207 *et seq*.

The good faith efforts finding does not apply because other chemicals cannot be substituted in toxicological, environmental, or analytical testing for PCBs.

J. Transboundary Movements

1. *The import for disposal rule and the Sierra Club decision*. In the NPRM, EPA proposed to control the export and import of PCBs for disposal under § 761.20. Subsequently, the PCB import regulations were separated from the larger rulemaking package and finalized on March 18, 1996 (61 FR 11096) (FRL–5354–8), at § 761.93 under a new subpart F - Transboundary Shipments of PCBs for Disposal. On July 7, 1997, the U.S. Court of Appeals for the Ninth Circuit overturned the Import for Disposal Rule, on the ground that EPA could not rely, as it did, on section 6(e)(1) of TSCA to authorize imports of PCBs for disposal. *Sierra Club* v. *EPA*, 118 F.3d 1324 (9th Cir. 1997). On July 18, 1997, EPA by letter informed those people who had submitted an import notification to EPA, pursuant to § 761.93, that EPA was closing the border to imports of PCBs. Accordingly, EPA would not allow the import of any shipment of PCBs under § 761.93 that left the exporting country after 12:01 a.m. local time, July 20, 1997. EPA can now only allow imports of PCBs by issuing exemptions to importers via the petition process under section 6(e)(3)(B) of TSCA. Today's rule implements the Sierra Club decision by amending § 761.97(a)(1) with minor clarifications.

2. *Proposed export provisions*. In the Import for Disposal rule, EPA redesignated the provisions formerly codified at § 761.20(c) allowing exports for disposal of PCBs and PCB Items at concentrations <50 ppm into a new § 761.97(a)(1). EPA believes that export of PCBs and PCB Items at concentrations <50 ppm was not affected by the *Sierra Club* decision, and

is retaining § 761.97(a)(1) with minor clarifications.

EPA stated in the NPRM that exports of PCBs and PCB Items for disposal in concentrations ≥50 ppm should be allowed on a case-by-case basis unless EPA had reason to believe that the PCBs would not be properly managed (59 FR 62817). EPA proposed that exports of PCBs or PCB Items in concentrations ≥50 ppm would be allowed at EPA's initiative or in response to a petition, provided there was an international agreement between the United States and the receiving country concerning PCB exports. Petitions needed to include a variety of information regarding the PCB waste and its proposed management; a certification by the government of the receiving country that it had received accurate and complete information about the waste, consented to receive it, and had adequate disposal facilities to assure proper management; and identification by the exporter of wastes containing liquid PCBs or PCB-containing electrical equipment. EPA proposed to exclude two types of PCB shipments from being considered exports or imports. The first type involved transit shipments where PCBs (including residues from spill clean-up in transit) are transported from the United States through another country and back to the United States (e.g., from Alaska through Canada to the continental United States). The second type of shipment involved PCBs procured domestically by the United States government, shipped to another country for United States government use and returned to the United States for disposal while remaining under United States government control.

3. *Decision to defer final rulemaking on exports and other transboundary shipments.* EPA has decided not to finalize today the provisions in the NPRM on exports for disposal or the return to the United States of Federal government PCB waste. EPA intends to address those issues as well as imports for disposal under the section 6(e)(3)(B) petition process in a future rule.

EPA is, however, finalizing the proposed provisions on transit shipments at a new § 761.99 for other transboundary movements. The Agency is also clarifying that PCB waste shipments that are merely transiting the U.S. (e.g., from Mexico to Canada) are not exports or imports.

The future rule on exports for disposal will not affect EPA's policy on PCB exports for use. Under the 1980 Closed Border Policy, PCB exports for disposal were banned. Exports for use or reuse were not affected, but remained subject to the limitations for processing and distribution in commerce under TSCA section 6(e)(3) and 40 CFR § 761.20, and the export notification requirements of TSCA section 12(b) and 40 CFR part 707, subpart D.

K. Change in Reportable Quantity — Spill Cleanup Policy

The Agency proposed to amend § 761.125(a)(1) by revising the phrase ''under the National Contingency Plan all spills involving 10 pounds or more'' to read ''under the National Contingency Plan all spills involving 1 pound or more.'' Most commenters supported the proposal and EPA has finalized it without change.

L. Records and Monitoring

1. *Transfer of totally enclosed PCBs.* Under existing § 761.20(c)(1), totally enclosed PCB Items, such as Transformers, and Large High and Low Voltage Capacitors ≥50 ppm (as defined in § 761.3) sold before July 1, 1979, for purposes other than resale, may be distributed in commerce (e.g., sold). EPA proposed that records be maintained on transactions for these PCB Items. Some commenters supported this proposal while others believed it was not necessary because facilities maintained such information in their sales records.

The Agency is amending § 761.180(a)(2)(ix) to require owners or operators transferring totally enclosed PCB Items that were sold before July 1, 1979, for purposes other than resale to record in their annual document log the name, address, and telephone number of the person to whom it was transferred; and the serial number of the item or, if a serial number is not available, its internal identification number. Since commenters indicated that they were already keeping such records, adding the information to the annual document log should not present much of an additional burden.

2. *Recordkeeping requirements for storage unit operators.* In today's final rule, EPA is adding recordkeeping requirements for storage unit operators (see § 761.180(a)(1)(iii) and (b)(1)(iii). This addition requires the operator to maintain a record of cleanups and inspections for leaks that must be performed under § 761.65(c)(5). These records are part of the facility's annual records, and must be maintained, and made available for inspection, with those records for the same time period. In the past, EPA inspectors had no way to verify that unit operators were complying with § 761.65(c)(5).

A few commenters felt that the proposed requirement would duplicate records they maintain under the Spill Cleanup Policy (§ 761.125). EPA is not prescribing a format for spill cleanup records under today's new provisions at § 761.180. Records of cleanup maintained by storage unit operators in compliance with the Spill Cleanup Policy will also satisfy the new recordkeeping requirement, provided they are kept with the annual records. Today's rule does not require a storage unit operator to develop and maintain two separate set of records for the same spill.

In the NPRM, EPA also proposed to require that storage unit operators keep a current written inventory or log of their unit (see proposed § 761.180(a)(1)(iv) and (b)(1)(iv)), to assist EPA inspectors in their on-site inspections. EPA believed that the proposal would not additionally burden unit owners or operators, since they must maintain an inventory to properly manage their facility, to ensure compliance with the 1-year storage and disposal time-limit, and to collect data for the annual log.

EPA received numerous comments on this requirement; most criticized it as being more burdensome than EPA understood and maintained that its benefits did not outweigh its costs. Commenters noted that many companies keep computerized inventories at central locations, and producing a paper copy and maintaining it at the storage unit would impose a significant new compliance cost. Commenters stated that keeping an inventory on-site was problematic with storage units at remote or dirty/dangerous locations (e.g., storage units for radioactive waste). Many commenters felt that the burden of constantly updating such an inventory was unjustified, since it would only be used on the day an inspection was conducted.

EPA has not finalized its proposal. While access to an inventory would help EPA conduct on-site inspections of storage unit facilities, EPA recognizes that the burden on storage unit operators associated with maintaining a continually-updated inventory on-site exceeds the benefit to the inspectors.

M. Amendments to the Notification and Manifesting Rule

The NPRM addressed a number of issues that were not contemplated when the PCB Notification and Manifesting (N&M) rule was published on December 21, 1989 (54 FR 52716, 40 CFR part 761, subpart K). Some of these issues were raised by litigants who sought review of the rule, and by other waste handling associations. (See, for example, Refs. 31 and 32.) Some items which EPA is

finalizing in today's rule have been previously promulgated under RCRA regulations and seem appropriate for inclusion in the PCB N&M rule. Others are simply clarifications and are accompanied by changes to 40 CFR part 761.

1. *Definition of commercial storer: Small quantity exemption for solids, and ''related' companies.* On June 27, 1990 (55 FR 26204), EPA amended the N&M rule to, among other things, clarify the definition of ''commercial storer of PCB waste'' at § 761.3. In 1990, EPA added the word ''liquid'' to the phrase ''exceeds 500 gallons of PCBs'' so that the phrase reads ''exceeds 500 liquid gallons of PCBs.'' This excluded facilities that were storing at any one time less than 500 gallons of liquid PCB waste from the requirement to seek approval as a commercial storer of that waste.

In a petition filed with the District of Columbia Circuit Court of Appeals on September 25, 1990, the petitioner claimed that EPA acted arbitrarily when it narrowed the small volume exemption in this manner so that storers of less than 500 gallons of non-liquid waste would not qualify for the exemption. EPA agreed that certain classes of businesses (e.g., companies performing PCB waste treatability studies and laboratories affiliated with PCB handling companies) on occasion may possess relatively small quantities of solid PCB waste generated by others. EPA also agreed to initiate a regulatory amendment to establish a small quantity exemption for solids to complement the exemption for liquids. EPA told the petitioner that until the rule was amended, it would take no enforcement action against a facility storing small quantities of PCB solids without a commercial storage approval if certain conditions were met (Ref. 32).

In the NPRM, EPA added a small volume exemption for storage of no more than 70 cubic feet of non-liquid PCBs to the definition of ''commercial storer of PCB waste.'' EPA solicited comments on this proposal, and in particular, whether 70 cubic feet was an appropriate cutoff.

EPA also clarified how the change of ownership or release of title of PCB waste relates to a person becoming a commercial storer of PCB waste. The following example illustrates the clarification. If a facility that generates and stores its own waste (e.g., transformers) is sold (or the title otherwise changes ownership), the new owner (or holder of the title) does not become a commercial storer of PCB waste. The waste, along with the facility, is now owned by the purchaser, which is storing its own waste and is therefore not a commercial storer.

Commenters agreed that EPA should add a non-liquid quantity below which one could store waste generated by others without needing a commercial storer approval. However, some commenters asked EPA to clarify whether one could store less than 500 liquid gallons *and* less than 70 cubic feet and qualify for the exemption. This was not EPA's intent. One is excluded from the requirement to seek a commercial storer approval if the total volume of stored waste generated by others is less than 500 gallons of material; liquid or non-liquid. Accordingly, to set a uniform standard, EPA has set the regulatory cutoff at a total combined volume of 500 gallons of liquid or non-liquid PCB-Contaminated material. For computation of non-liquid PCB volume, 500 gallons (U.S.) equals approximately 1.89 cubic meters.

The majority of other comments requested that EPA clarify what related companies are not considered to be storing others waste. Therefore, EPA has included examples of related companies in the definition of commercial storage (see § 761.3). One example listed in § 761.3 is a company having a joint ownership interest in a facility from which PCB waste is generated (such as a jointly owned electric power generating station) where the PCB waste is stored by one of the co-owners of the facility. The participants have an undivided ownership interest in the entire plant (although percentage of ownership may differ) and one of them is designated and responsible for operating the facility. This operating entity is the one storing the waste. The waste is jointly owned and the financial assurances provided by the ownership and operating agreements, together with the responsible nature of the operating utility, exempt such facilities from the need to seek commercial storage approval.

Other utilities commented that they should not be considered commercial storers of PCB waste when they manage waste generated by their customers, and that requiring them to seek commercial storer approval impedes them from engaging in this activity. EPA disagrees. It assumes that the utility is not the transformer owner, for example, and would be storing waste generated by others in this scenario. Utilities wishing to assist customers with their waste management could store less than 500 gallons of liquid or non-liquid waste at any time or act as a transfer facility, storing the waste less than 10 consecutive days, and not have to seek commercial storer approval.

2. *Clarification of exception reporting.* EPA proposed to amend § 761.215(b), (c), and (d), which discuss when a generator, commercial storer, or disposer must submit One-year Exception Reports to the EPA Regional Administrator. Currently, a disposer is required to submit a One-year Exception Report if: (i) The PCB waste is received on a date more than 9 months after it was removed from service for disposal as indicated on the manifest, and (ii) the disposer could not dispose of the PCB waste within 1 year from the date of removal from service for disposal.

A generator is required to submit the One-Year Exception Report when the generator has not received a copy of the manifest with the hand-written signature of the owner or operator of the designated facility within 45 days of the date the waste was accepted by the original transporter. Also, a generator or commercial storer who manifests PCBs or PCB Items to a disposer of PCB waste must submit the Exception Report when: (i) The waste was transferred to the disposer within 9 months after removal from service for disposal as indicated on the manifest, and (ii) the generator or commercial storer has not received within 13 months after the date of removal for disposal a Certificate of Disposal (CD) or it receives the CD, which indicates that the waste was disposed more than 1 year after it was removed from service for disposal.

The regulations do not, however, indicate when the disposer, commercial storer, or generator has to submit the One-year Exception Report to the EPA Regional Administrator. EPA proposed to amend § 761.215(b), (c), and (d) to require that the disposer, commercial storer, or generator submit the report to the EPA Regional Administrator no later than 30 days from the discovery of the passage of the regulatory deadlines.

Commenters generally disfavored exception reporting, but did not oppose EPA's proposal if EPA maintains the requirement to submit exception reports. However, most felt that 45 or 60 days was a more appropriate timeframe. EPA is not changing its requirement to submit exception reports under § 761.215 due to their usefulness as an enforcement tool, but is adding a 45-day submission timeframe to § 761.215(b), (c), and (d) for submission of the report to the EPA Regional Administrator.

3. *Timing for submission of the certificate of disposal.* Section 761.218(b) requires the owner or operator of a disposal facility to send a Certificate of Disposal (CD) to the generator indicated on the manifest that accompanied the shipment of PCB waste to the disposal facility, within 30

days after disposal of the PCB waste identified on the manifest was completed. Section 761.215(d)(2) indicates that a generator or commercial storer should submit a One-year Exception Report to the EPA Regional Administrator when the CD is not received from the disposer within 13 months from the date of removal from service for disposal (DORFSFD).

EPA clarifies that there may be different DORFSFD dates for different individual items on any given manifest. This means that some items listed on the manifest will need to be disposed of earlier than others to meet the 1-year time-limit for storage and disposal. Therefore, there will also be different CDs associated with those different disposal dates (unless the entire shipment listed on the manifest is disposed of before the 1-year anniversary of the item with the earliest DORFSFD). EPA proposed that the generator may either submit more than one manifest per shipment based on whether there are different DORFSFDs for the items in the shipment or attach a continuation sheet to reflect the different DORFSFDs. EPA wants to make clear that it is not appropriate to base disposal on the manifest item with the latest DORFSFD, or to send the CD based on that item.

Commenters generally opposed the concept of preparing multiple manifests or CD's. EPA agrees that multiple manifests or CDS may be overly burdensome and is not specifically requiring either one in this final rule. EPA is adding, however, language to § 761.218(b) indicating that a CD must be sent to the generator within 30 days of the date that disposal of each item of PCB waste identified on the manifest was completed. Generators and disposers may work out the details on how best to meet this requirement.

4. *Applicability of manifesting requirements*. EPA proposed to amend § 761.207(j), which describes what wastes are subject to the manifesting requirements based on PCB concentration and whether dilution has occurred. The section now states that if the waste contains less than 50 ppm PCBs, but comes from a source that contained greater than or equal to 50 ppm PCBs, it is subject to the manifesting and disposal requirements. Cited as an example is PCB spill cleanup material containing less than 50 ppm when the spill involved material containing greater than or equal to 50 ppm.

Proposed § 761.207(j) specified that there would be no manifest requirement for material currently below 50 ppm that derives from pre-April 18, 1978 spills of any concentration, or pre-July 2, 1979 spills less than 500 ppm. This is because (i) the material ''as found'' is below the regulatory threshold that would subject it to the disposal requirements of 40 CFR part 761, subpart D, and (ii) the original spilled material was below or not subject to those disposal requirements at the time of the original spill.

In addition, the manifest requirement does not apply to material derived from spills that have been decontaminated in accordance with EPA's spill cleanup policies (40 CFR part 761, subpart G). In other words, material containing PCBs that has been decontaminated to a level below 50 ppm would not be treated as if it contained greater than or equal to 50 ppm PCBs for disposal purposes, and could be disposed of in a municipal landfill or by other non-PCB disposal methods. This position is consistent with EPA's regulations that permit material contaminated as the result of a PCB spill to be distributed in commerce if it is decontaminated in accordance with the applicable spill cleanup policies (see 40 CFR 761.20(c)(5)).

EPA received no negative comments on the proposed amendment to § 761.207(j), and is finalizing it as proposed. Commenters did ask how to tell whether a pre-78 spill was originally <50 ppm PCBs when the original source of the spill is not known and test results at the spill site all show levels <50 ppm PCBs. Since prior to 1978 there were no PCB regulations addressing anti-dilution, any pre-78 spill that is found and tested to be less than 50 ppm may be treated at the concentration found, without determining whether the spilled material originally contained PCBs at greater than or equal to 50 ppm PCBs.

5. *Renotification: changes in facility operations*. Sections 761.202 and 761.205 discuss who must obtain an EPA ID number and how to do so using EPA Form 7710-53. EPA clarifies that when a facility has previously notified the Agency of its PCB waste handling activities using EPA Form 7710-53 and those activities change (e.g., the owner or operator of the facility notified EPA as a commercial storer and now wants to engage in the transport of PCB waste, or notified as a transporter and a commercial storer but no longer wishes to engage in the activity of transporting PCB waste, or the facility has changed its physical location), the notifier must resubmit EPA Form 7710-53 to reflect those changes. It will help EPA process the form if the form or cover letter indicates that it is a resubmission based on changes in facility operations and not a new submission.

EPA proposed to add this resubmission requirement for EPA Form 7710-53 to new § 761.205(f). EPA proposed that the resubmission be submitted to EPA no later than 5 working days after the change was made.

Some commenters opposed having to renotify if the facility location changed, others thought renotification was appropriate only when the facility ceased its waste handling activities, and still others thought it was inappropriate to notify when the facility ceased its PCB waste handling activities. For EPA to effectively track the number and type of PCB waste handlers, it must know whether a facility has ceased operation or moved. EPA is finalizing this amendment as proposed with one minor change; the time to renotify is 30 days, rather than 5 days as proposed.

In addition, high efficiency boilers and scrap metal recovery ovens/smelters that burn regulated PCBs must now notify EPA using Form 7710-53 pursuant to 761.205 (see Unit IV.E.3. of this preamble for further discussion).

6. *Transfer of ownership of commercial storage facilities*. EPA proposed to add paragraph (j) to § 761.65 on the procedures and timing for transferring ownership of a commercial storage facility. The timing and procedures would apply to facilities with either interim or final approval.

Existing commercial storage facilities had until August 2, 1990, to submit a completed application to EPA and receive interim status to operate until the application was formally approved or denied. Existing § 761.65(d)(3) describes the information that must be in the application, such as a closure plan, closure cost estimate, and financial assurance for closure. The N&M rule did not, however, discuss procedures and criteria for transferring ownership of a facility (as is the case under the RCRA regulations at 40 CFR 270.72(a)(4)). In the NPRM, EPA solicited comments on recognizing the transfer of interim status or final approval for commercial storage facilities if all the following conditions were met:

(i) The transferee demonstrated it had established, by the date of transfer, financial assurance for closure pursuant to § 761.65(g) using a mechanism effective as of the date of final approval. This would assure that there would be no lapse in financial assurance for the transferred facility.

(ii) The transferee submitted a new and complete application for final storage approval.

(iii) Any significant deficiencies (e.g., technical operations, closure plans, cost

estimates) that EPA had identified in the application of the transferor, were resolved in the new application by either the transferor or by the transferee.

The new application would also have to include all the elements listed in 40 CFR 761.65(d)(3). Before the transfer of interim status or final approval could occur, EPA would have to review the new application and deem it ''complete,'' i.e., all the required elements were included in the application. The application would also have to correct any significant deficiencies previously identified. EPA would reserve the right to deny the transfer of the interim approval status or final approval if upon review of the new application, EPA determined that the transferee was not qualified or was unable or unwilling to achieve and maintain its operations in compliance with TSCA and the PCB rules. In addition, a determination by the EPA Regional Administrator that the transfer of interim status or final approval could occur would not be determinative of the final decision that would be made regarding the commercial storage application. EPA would also reserve the right to deny any subsequent transfer request respecting a particular facility if EPA believed that the transfer was undertaken to avoid the requirement of seeking a final commercial storage approval.

The requirements described above would have to be met before EPA would recognize the transfer of interim status. For example, Company ''X'' is interested in acquiring ownership of Company ''Y,'' which has interim status to operate as a commercial storer of PCB waste. If EPA does not recognize the transfer of interim status before Company ''X'' takes legal title to the facility from Company ''Y,'' Company ''X'' may be in violation of the commercial storage regulations because it did not have interim status to operate at the time it took legal title.

To facilitate ownership transfer, EPA also solicited comments on whether a ''new'' application is necessary. If, for example, the transferee accepted the contents of the old application, the only parts that would have to be amended (excluding any deficiencies that have yet to be corrected) would be the financial assurance for closure, a new list of principals and key employees, and the compliance history of any business with which those individuals had been affiliated in the preceding 5 years. This submission of an ''amended'' application would save the transferee and the EPA time and money.

Commenters agreed that it should not be necessary to submit an entirely new application. Therefore, in today's final rule the transferee may submit a complete amended application including the parts mentioned above. Most commenters disagreed with the Agency's position that any deficiencies identified in the original application would have to be resolved before EPA would recognize the transfer. They felt they should be able to obtain the previous owner's status without having to resolve any discrepancies or be allowed to establish a compliance schedule to resolve the deficiencies in a timely manner.

EPA does not think it is a sound practice to allow the transfer of ownership of a commercial storage facility with interim status to a new owner when there are deficiencies in the existing application. If the deficiencies identified in the existing application are resolved in the amended application (i.e., the transferee will be submitting a new compliance history for new principals and key employees or a new closure plan), then EPA will consider the discrepancy in the original application to be resolved and allow the transfer. The Agency may still find discrepancies in the amended portion of the transferee's application and these would have to be resolved before the facility was granted final commercial storage approval.

Many commenters wanted an established timeframe by which EPA must notify the transferee of approval or denial of the transfer request. In today's final rule, EPA will provide a written decision on whether it will recognize the transfer of ownership of the facility within 90 days of receipt of the complete application.

7. *Modifications to storage facilities.* Section 761.65(e)(4) discusses when a commercial storage facility must submit a request to EPA for a modification to its storage approval to amend its closure plan. In the NPRM, EPA proposed a similar requirement for revising the financial assurance for closure when there are modifications to the commercial storage facility, for example, where the facility is enlarged and the maximum inventory of waste increases sufficiently to warrant an increase to the financial assurance mechanism. EPA proposed to add § 761.65(g)(9) to require that when a modification to the storage facility warrants establishing a new financial assurance mechanism or amending the existing one, the owner or operator must have done so no later than 30 days after the EPA Regional Administrator (or Director, National Program Chemicals Division) is notified that the modification is complete, but before the use of the modified portion of the facility. In addition, EPA proposed that the EPA Regional Administrator (or Director, National Program Chemicals Division) would have to be notified in writing no later than 7 days after the modification to the facility is complete.

Commenters requested that EPA clarify what percentage increase in storage capacity would trigger the need for a new or amended financial assurance mechanism. If the modification results in any increase in the maximum storage capacity indicated in the permit, an amendment to the financial assurance mechanism is required to address the added waste inventory.

In today's final rule, EPA amended proposed § 761.65 by replacing the phrase ''Regional Administrator (or Director, National Program Chemicals Division)'' with ''Director of the Federal or State issuing authority'' to reflect the possibility that the permit may have been issued under another authority but recognized under a TSCA PCB Coordinated Approval (see § 761.77).

EPA also changed the timeframe in which the permitting authority must be notified of the completion of the facility modification from 7 to 30 days.

8. *Clarification of which disposers must submit annual reports.* Section 761.180(b)(3) requires that each owner or operator of a PCB disposal or commercial storage facility submit an annual report, summarizing the records and annual document log maintained under § 761.180(b)(1) and (b)(2), to the EPA Regional Administrator of the EPA Region in which the facility is located by July 15 of each year. Sections 761.180(b)(1) and (b)(2) require that information obtained from manifests that are generated or received by the facility be recorded. If a disposal facility disposed of only its own waste and, therefore, never received or generated a manifest, it still has to prepare an annual document log under § 761.180(b)(2)(iii). Examples of such facilities include high efficiency boilers at § 761.71; and facilities conducting decontamination under § 761.79.

EPA clarifies that ''disposers of PCB waste,'' as defined at § 761.3, who dispose of their own waste must submit an annual report. Therefore, EPA proposed to amend § 761.180(b)(3) to state that a disposer's obligation to submit an annual report is based on the act of disposing of PCB waste material and not whether the facility received or generated manifests. EPA received no negative comments on the proposal and is finalizing it as proposed.

9. *Financial assurance mechanism: corporate guarantee.* EPA proposed to

reference 40 CFR 264.143(f)(10) of the RCRA financial assurance regulations (57 FR 42832, September 16, 1992) to add an additional financial assurance mechanism for PCB commercial storage facility closure. This mechanism allows the corporate guarantor to be the direct or higher-tier parent corporation of the owner or operator; a firm whose parent corporation is also the parent corporation of the owner or operator; or a firm with a substantial business relationship with the owner or operator of the commercial storage facility. EPA proposed to add this mechanism as § 761.65(g)(7) and redesignate existing (g)(7) as (g)(8). The proposal met with no negative comments and is finalized as proposed.

10. *Clarification of the term ''facility.''* In the NPRM, EPA solicited comments on the need to clarify the terms ''facility'' and ''facilities.'' The terms are used in different contexts throughout 40 CFR part 761. EPA's impetus for raising this issue came from reviewing the PCB Notification and Manifesting rule preamble (54 FR 52716, 52722, column 2). That preamble discussion focusses on the requirement for generators with on-site storage facilities to notify the Agency of their PCB waste handling activities. The first two sentences in the last paragraph read, ''In submitting their notifications to EPA, members of this class of generator/storer will submit a notification form for each of their storage areas that is subject to § 761.65. EPA will issue a unique identification number to each notifying storage facility, and this identification number will correspond to the physical location of the facility.''

Here the terms ''storage area'' and ''storage facility'' are used interchangeably to mean all structures on contiguous land or specified property, as opposed to a particular building, structure, cell, or unit. EPA did not intend to require notification for each storage unit on a contiguous piece of property, which would result in multiple, individual identification numbers for that property. A facility on a contiguous piece of property, regardless of the number of storage areas or units, need only notify once. Therefore, in this instance, the term facility means all contiguous land and structures used for the storage of PCB waste.

In other sections of the PCB regulations, however, the term ''facility'' means an individual unit or structure. For example, § 761.65(b)(1) states that a facility used for the storage of PCBs and PCB Items shall have an adequate roof, walls, and floor; continuous curbing with a minimum 6 inch high curb; no floor drains or expansions joints, etc.; and shall not be located at a site below the 100–year flood water elevation. It is clear in this instance, that EPA is not referring to a contiguous piece of property, but to an individual structure or unit.

In most of 40 CFR part 761, the term ''facility'' refers to a contiguous piece of property including the structures or individual storage or disposal units. There are, however, 10 or so places in the PCB regulations where the term ''facility'' refers only to the individual unit or structure. In these 10 places, EPA proposed to delete the term ''facility'' and insert a term whose definition will best represent the Agency's intent (i.e., an individual unit, structure, or building). EPA solicited comments on the most appropriate term to convey this meaning. For purposes of this final rule, the term ''unit'' will be used to indicate this change in the regulatory text. The term ''unit'' includes structures that meet the design criteria of § 761.65(b) and any functional equivalent recognized by the EPA Regional Administrator under § 761.77. EPA has added definitions of ''unit'' and ''facility'' to § 761.3 of today's final rule.

11. *Notification by transporters.* EPA wishes to clarify the status of subcontractors and permanently leased operators under the manifesting and notification regulations. The issue is whether a person who owns and operates a vehicle that is leased to a motor carrier and is being used to transport PCB waste must obtain an EPA Identification number or may use the ID number issued to the motor carrier.

EPA's PCB regulations generally require any person who is transporting PCB waste to have an EPA ID number. Specifically, 40 CFR 761.202(b)(2) states that a transporter of PCB waste shall not transport PCB waste without having received an EPA ID number from EPA, or deliver PCB waste to transporters, disposers, or commercial storers that have not received an EPA ID number. A ''Transporter of PCB Waste'' is defined at § 761.3 to mean ''any person engaged in the transportation of regulated PCB waste by air, rail, highway, or water for purposes other than consolidation by a generator.'' Section 761.3 defines a ''Person'' to mean ''any natural or judicial person including any individual, corporation, partnership, or association; any State or political subdivision thereof; any interstate body; and any department, agency, or instrumentality of the Federal Government.''

Generally, EPA has interpreted these rules to require an EPA ID number for the person who is ultimately responsible for transporting the waste, but not for employees of that person. Thus a corporation that is transporting PCB waste would be the ''Transporter of PCB Waste'' and would have to obtain an ID number. Corporate employees who physically drive the trucks that contain the waste would use the corporate ID number rather than obtain their own. This approach is illustrated by EPA Form 7710-53, ''Notification of PCB Activity,'' which requires notification on behalf of facilities, not individual employees. Similarly, the Uniform Hazardous Waste Manifest, EPA Form 8700-22, used under subpart K associates the EPA ID number with the company name (Items no. 5 through 9).

In contrast, an individual who owns and operates his or her own truck as an independent PCB waste hauler, rather than as an employee, is the person ultimately responsible for moving the waste. Such a person is a ''Transporter of PCB Waste'' and is required to obtain his or her own unique EPA ID number.

In some situations, however, the owner/operator is driving the vehicle under a lease to another person, and is no longer operating with complete independence. The preamble to the proposed rule (59 FR 62841) noted that EPA interpreted the regulations to require a separate EPA ID number for individual owner/operators even if they had permanently leased their vehicles to a second person. EPA did not allow an owner/operator to use the second person's EPA ID number, based on the rationale that the owner/operator was operating independently and was not part of the entity that had been granted the EPA ID number.

Commenters questioned the merit of this interpretation. The commenters noted that under certain leases, the control of a motor carrier over a leased vehicle and its owner/operator approximates the control of an employer over an owned vehicle and its employee operator. Under such a lease, the motor carrier exercises control over the vehicle and driver, and is legally responsible for maintaining vehicle records and for insuring the vehicle. The motor carrier is also liable for the owner/operator's actions on the road, including Department of Transportation (DOT) violations and any accidents or releases of hazardous materials.

Comments also detailed how motor carriers are regulated under DOT/Interstate Commerce Commission (ICC) rules. Comments noted that DOT/ICC regulations do not compel a motor carrier to own vehicles; rather, they may lease vehicles, either from a leasing company or from individuals who own

and operate their own vehicle. For purposes of DOT/ICC regulations, once a vehicle is leased by a motor carrier, that vehicle is under the control of the motor carrier, and the owner/operator is no longer regulated as an independent entity. The vehicle is then considered part of the motor carrier's fleet, and it must be identified with the motor carrier's ICC, DOT, or State identification number. In addition, for DOT and ICC purposes, the motor carrier is the legal entity responsible and liable for the actions of the leased vehicle and its owner/operator.

In consideration of these comments, EPA believes it is appropriate to modify its interpretation of the regulation that requires a Transporter of PCB Waste to obtain an EPA ID number. The owner/operator of a vehicle may utilize the EPA ID number of a motor carrier while moving PCB waste in that vehicle provided the vehicle is leased to a motor carrier and, under the terms of the lease, the motor carrier has exclusive possession, control, and use of the vehicle and assumes complete responsibility and liability for the operation of the vehicle while it is being used under the lease. An example of such a lease is one complying with the ICC regulations at 49 CFR part 1057, subpart B. Alternatively, the owner/operator may use his or her own EPA identification number. This interpretation supersedes the earlier interpretation published in the proposed rule preamble at 59 FR 62841.

12. *Verification of a RCRA identification number for use for PCB waste handling activities under TSCA.* The current PCB regulations require that when a person has a RCRA identification number and wishes to engage in PCB waste handling activities, the person must submit the Notification of PCB Activity Form (EPA Form 7710-53) and have their RCRA identification number verified in writing before the person engages in certain PCB waste handling activities. Due to delays in verifying existing RCRA numbers, a notifier may use their RCRA identification number prior to receipt of written verification from EPA once the notifier has confirmed that EPA is in receipt of their PCB notification form. Confirmation of receipt of the form may be accomplished by submitting it through the U.S. mail--return receipt requested, telephoning to confirm receipt of mail or facsimile, commercial overnight carrier's delivery verification processes, or any other manner in which the submitter can demonstrate that the form was received by EPA Headquarters. Written verification that the RCRA identification number may be used for TSCA PCB waste handling activities will follow.

V. Chart of Marking and Recordkeeping Requirements and EPA Forms

The following chart clarifies the marking and recordkeeping provisions of 40 CFR part 761, amended to reflect today's final rule. Annual recordkeeping requirements are highlighted with an asterisk. M_L refers to the large PCB mark as defined at § 761.45. This chart is included as an informal reference guide only and is not a complete statement of all applicable requirements. Readers must refer to the actual regulations at 40 CFR part 761 for specific legal requirements.

The PCB Transformer Registration Form, EPA Form 7720-12, discussed at Unit IV.B.3.a., and the revised Notification of PCB Activity Form, EPA Form 7710-53, discussed at various units of this preamble, are reproduced here for the convenience of and use by the regulated community.

PCB Marking and Recordkeeping Requirements

Regulated Items	Marking Requirements	In-Service Records	Disposal and Storage-for-Disposal Records
PCB Containers	M_L	-Total Kg weight of all containers* -Description of contents*	-Date container -Serial or I.D. number * -Kg weight of each* -Description of contents* -Dates for: removal; transport; disposal* -Total number & Kg weight*
PCB Article Containers	M_L	-Total Kg weight of all containers* -Description of contents*	-Date container -Serial or I.D. number* -Kg weight of each* -Description of contents* -Dates for: removal; transport; disposal* -Total number & Kg weight*
PCB Transformers	M_L M_L or approved mark on access to unit (e.g., vault doors)	-Total number of units* -Total Kg weight* -Inspection and maintenance -Registration with EPA -Record of sale	-Date article -Serial or I.D. number* -Kg of fluid in each* -Dates for: removal; transport; disposal* -Total number & Kg weight*
PCB Large High or Low Voltage Capacitors	M_L on unit or on protected location	-Total number* (protected location records if applicable) -Record of sale	-Date article -Serial or I.D. number* -Kg of fluid in each* -Dates for: removal; transport; disposal* -Total number & Kg weight*
PCB Small Capacitors	**		

PCB Marking and Recordkeeping Requirements—Continued

Regulated Items	Marking Requirements	In-Service Records	Disposal and Storage-for-Disposal Records
PCB-Contaminated Electrical Equipment	Not required	-Record of sale	Not required (once drained)
PCB Equipment that contains PCB Large Capacitors or PCB Transformers	M_L	Records required for PCB Large Capacitors or PCB Transformers	Records required for PCB Large Capacitors or PCB Transformers
Natural Gas Pipelines, Compressors, Appurtenances Air compressor systems (≥2ppm)	M_L on above ground sources of PCB liquids ≥50 ppm		
Bulk PCB waste	M_L on container		-Kg weight/quantity dates of each batch in or out. Also disposition of each batch out. -Total Kg weight
Storage areas	M_L		-Annual records as required under § 761.180 -Records of attempts to comply with 1-year limit (if necessary)
Transport vehicles	M_L if contains a PCB Transformer or 45kg liquid PCBs		
PCB motors, hydraulic and heat-transfer systems	M_L (Note: use of these items no longer authorized)		

* Annual reporting requirement.

** Manufacturers are required to mark non-PCB Large Low Voltage capacitors, small capacitors, and fluorescent light ballasts with a ''No PCBs'' label until 7/1/98.

USEPA	United States **Environmental Protection Agency** Washington, DC 20460	Form Approved OMB No. 2070-0112

Notification of PCB Activity

Return To:	**For Official Use Only**
Fibers & Organics Branch (7404) Office of Pollution Prevention & Toxics U.S. Environmental Protection Agency 401 M Street, S.W. Washington, DC 20460	

1. Name of Facility	Name of Owner Facility	2. EPA Identification Number (if already assigned under RCRA)

3. Facility Mailing Address (Street or PO Box, City, State, & Zip Code)	4. Location of Facility (No. Street, City, State, & Zip Code)

5. Installation Contact (Name and Title)	6. Type of PCB Activity (Mark 'X' in appropriate box. See Instructions.)
Telephone Number (Area Code and Number)	☐ A. Generator w/onsite storage facility ☐ B. Storer (Commercial) ☐ C. Transporter ☐ D. R&D/Treatability ☐ E. Approved Disposer ☐ F. Scrap Metal Recovery Oven/Smelter, High Efficiency Boilers

7. Certification

Under civil and criminal penalties of law for the making or submission of false or fraudulent statements or representations (18 U.S.C. 1001 and 15 U.S.C. 2615), I certify that the information contained in or accompanying this document is true, accurate, and complete. As to the identified section(s) of this document for which I cannot personally verify truth and accuracy, I certify as a company official having supervisory responsibility for the persons who, acting under my direct instructions, made the verification that this information is true, accurate, and complete.

Signature	Name and Official Title (Type of Print)	Date Signed

Paperwork Reduction Act Notice

The annual public burden for this collection of information is estimated to average 1.5 hours per response. This estimate includes time for reading instructions, searching existing data sources, gathering and maintaining the needed data, and completing and reviewing collection of information, including suggestions for reducing the burden to: Director, OPPE Regulatory Information Division, U.S. Environmental Protection Agency (mail code 2137), 401 M Street, S.W., Washington, D.C. 20460. Include the OMB number identified above in any correspondence. Do not send the completed form to this address. The actual information or form should be submitted in accordance with the instructions accompanying the form, or as specified in the corresponding regulations.

EPA Form 7710-53 (Rev.)
Previous editions are obsolete.

Item-by-Item Instructions for Completing EPA Form 7710-53

Return completed form to:

Fibers & Organics Branch (7404)
Office of Pollution Prevention & Toxics
U.S. Environmental Protection Agency
401 M Street, SW
Washington, DC 20460

No information on the form may be claimed confidential.

Type or print in black ink all items, except Item VII, "Certification." If you must use additional sheets, indicate clearly the number of the item on the form to which the information on the separate sheet applies.

Item 1 -- Name of facility: Enter the name of the facility and the name of the owner of the facility.

Item 2 -- EPA identification number (if already assigned under RCRA): Enter the identification number the facility was assigned under the RCRA hazardous waste notification regulations. If no identification number has been assigned, leave this space blank. A notifier may use their RCRA Identification number prior to receipt of written verification from EPA once they have confirmed that EPA is in receipt of their PCB notification form. Confirmation of receipt of the form may be accomplished by submitting it through the U.S. mail -- return receipt requested, telephoning to confirm receipt of mail or facsimile, commercial overnight carrier's delivery verification processes, or any other manner in which the submitter can demonstrate in that the form was received by EPA Headquarters.

Items 3 and 4 -- Facility mailing address and location: Complete Items III and IV. Please note that the address you give in Item IV, "Location of Facility," must be a physical address, not a post office box or route number. If the mailing address and physical location are the same, you may enter "Same" in Item IV. If the facility is a mobile incinerator, you may enter "mobile" in Item IV, and provide the mailing address for the installation contact in Item III.

Item 5 -- Installation contact: Enter the name, title, and business telephone number of the person who should be contacted regarding information submitted on this form.

Item 6 -- Type of PCB activity: Mark the appropriate box(es) to show which PCB activities are taking place at this facility.

A. Generator with onsite storage facility: You are a generator with an onsite storage facility under this notification requirement if you are a user, owner, or processor of PCBs or PCB items and you maintain your own storage facilities subject to 40 CFR 761.65(b) or (c)(7) for PCBs. If you are a generator with an onsite storage facility, mark an "X" in this box.

B. Commercial Storer: You are a commercial storer if you own or operate a storage facility which is subject to the storage facility standards of 40 CFR 761.65(b) or (c)(7), and which engages in off-site storage activities involving the PCB wastes generated by others. Most commercial storers of PCB waste perform waste storage services in exchange for a fee or other compensation, but the receipt of compensation is not necessary for your storage facility to qualify as a commercial storer of PCB wastes generated by others. See definition of commercial storer in 40 CFR 761.3. If you are a commercial storer, mark an "X" in this box.

C. Transporter: If you move PCBs by air, rail, highway, or water, then mark an "X" in this box.

D. R&D/Treatability: If you are engaged in conducting R&D into PCB disposal technologies and cannot accept waste on a commercial scale, mark an "X" in this box. You should also check this box if you conduct treatability studies even though you may have marked the "Approved Disposer" box.

E. Approved Disposer: If you currently hold a valid EPA permit to dispose of PCBs in concentrations exceeding 50 ppm in a landfill, through alternative technology or incineration, mark an "X" in this box.

F. Scrap Metal Recovery Oven/Smelter, High Efficiency Boilers: If you operate a device to dispose of PCBs, or if you dispose of PCBs in compliance with Section 761.71 (i.e., high efficiency boilers) or Section 761.72 (i.e., scrap metal recovery oven/smelter), mark an "X" in this box.

Item 7 -- Certification: This certification must be signed by the owner, operator, or an authorized representative of the facility. An "authorized representative" is a person responsible for the overall operation of the facility (i.e., a plant manager or superintendent, or a person of equal responsibility). All notifications must include this certification to be complete.

USEPA	United States **Environmental Protection Agency** Washington, DC 20460	Form Approved OMB No. 2070

PCB TRANSFORMER REGISTRATION

Return To: Fibers & Organics Branch (7404) Office of Pollution Prevention & Toxics U.S. Environmental Protection Agency 401 M Street, S.W. Washington, DC 20460	**For Official Use Only**

1. Company Name	Address	Contact Name & Phone #

2. a. Location of PCB Transformer(s) - Location #1	2. a. Location of PCB Transformer(s) - Location #2
b. No. of Transformers and wt. (kg):	b. No. of Transformers and wt. (kg):
c. Any transformers containing flammable dielectric fluid: **Yes** or **No**	c. Any transformers containing flammable dielectric fluid: **Yes** or **No**
2. a. Location of PCB Transformer(s) - Location #3	2. a. Location of PCB Transformer(s) - Location #4
b. No. of Transformers and wt. (kg):	b. No. of Transformers and wt. (kg):
c. Any transformers containing flammable dielectric fluid: **Yes** or **No**	c. Any transformers containing flammable dielectric fluid: **Yes** or **No**

7. Certification

Under civil and criminal penalties of law for the making or submission of false or fraudulent statements or representations (18 U.S.C. 1001 and 15 U.S.C. 2615), I certify that the information contained in or accompanying this document is true, accurate, and complete. As to the identified section(s) of this document for which I cannot personally verify truth and accuracy, I certify as a company official having supervisory responsibility for the persons who, acting under my direct instructions, made the verification that this information is true, accurate, and complete.

Signature	Name and Official Title (Type of Print)	Date Signed

Paperwork Reduction Act Notice

The annual public reporting burden for this collection of information is estimated to average 2 hours per response. This estimate includes time for reading instructions, searching existing data sources, gathering and maintaining the needed data, and completing and reviewing collection of information. Send comments regarding the burden estimate or any other aspect of this collection of information, including suggestions for reducing the burden to: Director, OPPE Regulatory Information Division, U.S. Environmental Protection Agency (mail code 2137), 401 M Street, S.W., Washington, D.C. 20460. Include the OMB number identified above in any correspondence. Do not send the completed form to this address. The actual information or form should be submitted in accordance with the instructions accompanying the form, or as specified in the corresponding regulations.

EPA Form 7720-12

Item-by-Item Instructions for Completing EPA Form 7720-12

No information on this form may be claimed as confidential.

Return completed form to:

Fibers & Organics Branch (7404)
Office of Pollution Prevention & Toxics
U.S. Environmental Protection Agency
401 M Street, SW
Washington, DC 20460

PCB Transformer means any transformer that contains 500 ppm or greater PCB dielectric. For PCB concentration assumptions applicable to transformers containing three pounds or more of fluid other than mineral oil, see 40 CFR 761.2. For provisions permitting reclassification of electrical equipment containing 500 ppm or greater PCBs to PCB-Contaminated Electrical Equipment, see 40 CFR 761.30(a) and (h).

Type or print in black ink all items, except Item 3, "Certification." If you must use additional sheets, indicate clearly the number of the item on the form to which the information on the separate sheet applies.

Item 1 **Company Name:** Enter the name of the company which owns the equipment.
Address: Enter the street, city, state, and zip code of the company.
Contact Name and Phone Number: Enter the name and business telephone number of the person who should be contacted regarding information submitted on this form.

Item 2a **Location of PCB Transformers:** Enter the address (street, city, state, and zip code) where the PCB Transformer(s) is located. Please note that the address you give must be a physical address, not a P.O. Box. Route numbers are acceptable provided they include enough specificity to assist emergency response personnel in determining the location of the transformer(s).

Item 2b **Number (No.) of Transformers and weight (wt..):** Enter the total number of PCB (500 ppm or greater) Transformers at this location (address) and the total weight (wt..) in kilograms (kg) of the PCB dielectric fluid in the transformer(s).

Item 2c **Any transformers containing flammable dielectric fluid:** (Response optional) Circle yes or no if you have any knowledge that there are or are not transformers at this location (address) that contain flammable (see 40 CFR 261.21(a)(1) - Characteristics of Ignitability) dielectric fluid.

***Please note this form has been designed to accommodate companies submitting registrations for multiple locations. However, companies with more than 4 locations may choose to submit an additional form(s) or an attachment(s).

Item VII -- Certification: This certification must be signed by the owner, operator, or an authorized representative of the transformer owner or operator of the facility or property where the unit is located. An "authorized representative" is a person responsible for the overall operation of the facility (i.e., a plant manager or superintendent, or a person of equal responsibility). All notifications must include this certification to be complete.

VI. Rulemaking Record

The following list of documents includes basic information considered by the Agency in developing today's final rule. The official records of previous PCB rulemakings are incorporated as they exist in the TSCA Public Docket on the date this rule is promulgated. A full list of the materials included in the official rulemaking record is available for inspection and copying in the TSCA Nonconfidential Information Center (NCIC) from noon to 4 p.m. The TSCA NCIC is located in Rm. B607, Northeast Mall, 401 M St., SW., Washington, DC. However, any CBI that is a part of the record for this rulemaking is not available for public review. A public version of the record, from which CBI has been excluded, is available for inspection.

VII. References

1. USEPA, OHEA. *Development of Advisory Levels for Polychlorinated Biphenyls (PCBs) Cleanup*. OHEA-E-187 (May 1986): 199pp.

2. Versar, Inc. Assessment of Risks Associated with the PCB Disposal Amendments. (May 11, 1998): 42 pp.

3. USEPA, OPPTS, EETD. Cost Impacts of the Final Regulation Amending the PCB Disposal Regulations at 40 CFR Part 761. (April 30, 1998): 236pp.

4. USEPA, ORD. *PCBs Cancer Dose-Response Assessment and Application to Environmental Mixtures*. EPA/600/P-96/001F (September 1996): 75pp.

5. USEPA, OPPT, NPCD. Support Document for the PCB Disposal Amendments, Final Rule; Request for Data in Support of a TSCA Use Authorization for Non-Liquid PCB Applications. (April 16, 1998): 5pp.

6. USEPA, OSWER. *Test Methods for Evaluating Solid Waste, Third Edition*. SW-846, *Method Number 9095 Paint Filter Liquids Test*. 4pp.

7. USEPA, OIG. Memorandum from Kenneth A. Konz, Assistant Inspector General for Audit to Linda J. Fisher, Assistant Administrator, OPPTS, USEPA. Subject: Special Report No. E1EPG2–11–6000–2500065, Review of EPA Rule Regulating PCB Transformer Fires. (August 21, 1992): 24pp.

8. State of Connecticut, Department of Environmental Protection. Letter from Timothy R.E. Keeney to William K. Reilly (August 23, 1991): 2pp.

9. USEPA, OPTS, EED. Memorandum from K.A. Hammerstrom to D. Keenher, EED. Subject: Exposure to PCBs in recycled pipe. (July 7, 1988): 8pp.

10. USEPA, OPTS, EED. Letter from M.P. Halper to L.J. Ogden, Interstate Natural Gas Association of America. Subject: Responses to letter of March 17, 1988 re: natural gas pipeline removal and retirement. (June 6, 1988): 12pp.

11. USEPA. *Technical Guidance for the Abandonment in Place of Interstate Natural Gas Pipeline Systems* (October 24, 1990): 13pp.

12. USEPA, OPTS, OTS. *Guidance on Classification for Purposes of Disposal of Stored Natural Gas Pipe Which Was Not Part of a Pipe Removal Project Carried Out Under an EPA-Approved PCB Disposal Activity* (February 1991): 10pp.

13. USEPA, OPTS, OTS. *Technical Guidance for the Declassification of Interstate Natural Gas Pipeline Systems* (February 1991): 6pp.

14. USEPA, OSWER. Strategy for Minimization and Combustion. EPA/530-R-94-044. (November 1994): 23pp.

15. USEPA, OPTS. Letter from J.A. Moore, Assistant Administrator, Office of Pesticides and Toxic Substances, to T.K. Allen, Piper and Marbury, counsel for Utilities Solid Waste Activities Group. Subject: An interpretation of the PCB regulations on the disposal of drained carcasses from mineral oil transformers, (September 9, 1986): 4pp.

16. Hazardous Waste Treatment Council. *Petition For Rulemaking to Amend 40 CFR § 761.60 [under section 21 of TSCA]*. Submitted to USEPA by Richard C. Fortuna, Executive Director for the Hazardous Waste Treatment Council, Franklin D. Sales, President of Salesco Systems USA, Inc., and Brin McCagg, Vice-President of FulCircle Ballast Recyclers (December 15, 1992).

17. S.D. Myers, Inc. Summary of Results: PCB Levels in Light Ballast Compound. (August 11, 1993): 31pp.

18. Rollins Environmental Services, Inc. Analytical Protocol and Analytical Results from PCB Ballast Study (September 20, 1993): 112pp.

19. USEPA. Memorandum from Greg Schweer, Exposure Assessment Branch, to Jane Kim, Chemical Regulation Branch, Re: PCB Spill Exposure Scenarios (April 18, 1986): 3pp.

20. USEPA. Memorandum from Karen A. Hammerstrom, Exposure Assessment Branch, to Jane Kim, Chemical Regulation Branch, Re: Cleanup of PCB Spills Located Indoors (February 5, 1986): 8pp.

21. USEPA, OW. Proceedings of the EPA's Contaminated Sediment Management Strategy Forums (September 1992): 215pp.

22. USEPA, OPTS, EED, and USEPA, OSW. Project Summary--PCB, Lead and Cadmium Levels in Shredder Waste Materials: A Pilot Study. (EPA 560/5-90-008A). (April 1991): 14pp.

23. USEPA, Memorandum from Pat Jennings, Exposure Assessment Branch, to Denise Keehner, Chief, Chemical Regulation Branch, Re: Estimates of Exposure of Humans to PCBs from Disposal of Fluff (August 16, 1988): 21pp.

24. USEPA, OGC. Memorandum from Lisa K. Friedman to Pamela A. Hill, Applicability of the Household Waste Exclusion to Lead-Contaminated Soil (March 7, 1995): 6pp.

25. USEPA, OSWER. Letter from Michael Shapiro to Mark Veckman, Comprehensive Environmental Assessment, Status of (Household) Waste Generated from Abatement of Lead-Based Paint (May 24, 1994): 3pp.

26. U.S. Army, U.S. Army Corps of Engineers, Directorate of Civil Works. Letter from John P. D'Aniello, Acting Director of Civil Works, to RCRA Docket Information Center, OW, EPA (August 28, 1996): 7pp.

27. National Association of Corrosion Engineers (NACE). ''Standard Test Method, Visual Standard for Surfaces of New Steel Centrifugally Blast Cleaned with Steel Grit and Shot.'' TM0175-75 (1981): 5pp.

28. U.S. Navy, Puget Sound Naval Shipyard. Electronic mail from Peggy Sue Jones to John H. Smith, USEPA. Subject: NACE standards for cleanliness of blasted metal surfaces (January 26, 1998): 2pp.

29. Midwest Research Institute. Letter from K. Boggess to J. Smith, Chemical Regulations Branch, EED, OPTS, USEPA, Subject: ''PCB surface decontamination experiments using kerosene,'' EPA Contract No. 68-DO-0137, MRI Project No. 9801-A, Work Assignment No. 30, (June 25, 1992): 4pp.

30. Nishioka, M. and Hines, C. ''Final Report for Work Assignment 1-9, Technical Support for PCB Disposal Rulemaking'' (undated): 10pp.

31. USEPA, OGC. Letter from J.C. Nelson, to F.S. Blake, Swidler Berlin, Chartered, counsel for General Motors Corporation and Chrysler Corporation. Subject: Petition for review of the PCB manifest rule (December 20, 1990): 3pp.

32. USEPA, OGC. Letter from J.C. Nelson to M. Edgar of Piper Marbury, counsel for Chemical Waste Management, Inc. Subject: Petition for review re: PCB Notification and Manifesting Rule; Correction; dated June 27, 1990, (March 1, 1991): 2pp.

33. USEPA. Memorandum from Gregg Schweer, Exposure Assessment Branch, to Jane Kim, Chemical Regulation Branch, Re: Conservative Estimates of Potential Exposures of PCBs Resulting from Spills of One Pound of PCBs in Mineral Oil or Askaral Fluid. (October 24, 1986): 14pp.

34. USEPA, OSWER. ''Soil Screening Guidance Technical Background Document'' EPA/540/R-95/128. (May 1996): 168 pp. (plus appendices).

VIII. Regulatory Assessment Requirements

A. Executive Order 12866

Under Executive Order 12866, entitled *Regulatory Planning and Review* (58 FR 51735, October 4, 1993), OMB has determined that this is an ''economically significant regulatory action'' under section 3(f)(1) of the Executive Order. OMB has made this determination because the net annual economic impact of this rule is estimated to result in a potential total annual cost savings of between $178.1 million and $736.1 million. This action was submitted to OMB for review, and any changes made in response to OMB comments are available for review in the docket.

In support of the cost saving amendments contained in this final rule, EPA has conducted a thorough cost assessment of the estimated costs and cost savings associated with the provisions presented in the proposed rule, and those contained in the final rule. The cost assessment for the final rule is presented in a document entitled *Cost Impacts of the Final Regulation Amending the PCB Disposal Regulations at 40 CFR Part 761,* a copy of which is available in the docket for this rule. In addition, the Agency has also prepared a risk assessment, entitled *Assessment of Risks Associated with the PCB Disposal Amendments*, which summarizes the risks associated with the amendments provisions and upon which the Agency's findings of no unreasonable risks are based.

Although resulting in significant cost savings, these amended provisions will not reduce the benefits associated with the protection of human health and the environment afforded through the original regulation, which are summarized in Unit II.D. of this preamble. EPA has determined, therefore, that there is no need to revise the benefits analysis prepared for the original rule. In addition, since these amendments reduce the overall costs and burdens associated with the existing program requirements, it is not necessary in this case to conduct an extensive quantitative analysis of all the potential alternatives. The Agency has therefore conducted the necessary assessments in compliance with Executive Order 12866. The following is a brief summary of the cost assessment prepared for the final rule.

The net economic impact of the final regulation is a cost savings that will be distributed widely throughout the economy. In estimating cost savings, the final regulation was compared to two cost baselines, except for requirements related to the disposal of PCB-Contaminated ship hulls, in which case the Agency considered a third baseline. The first baseline is based on the costs derived from EPA policy as it has evolved in response to PCB waste handling issues, while the second baseline reflects a literal interpretation of the existing regulation. To estimate the costs associated with the disposal of PCB-Contaminated ship hulls, EPA has added a third baseline to reflect the special circumstances surrounding this activity. The Agency used these baselines in its assessment of costs for this rule because it is important to recognize the regulatory impact of changes that have resulted from the subsequent issuance of official Agency policy. In either case, the cost assessment indicates that the final regulation will generate a net cost savings when compared to either baseline, although the savings are substantially higher for the existing regulation baseline. The net, annual cost savings are $148.1 million when using the special circumstances baseline, $178.1 million using the EPA policy baseline, and $736.1 million using the existing regulation baseline.

Significant cost savings result from changes to the disposal requirements for PCB remediation waste. EPA will now allow wider latitude in selecting disposal methods for PCB remediation wastes, resulting in a lowering of disposal costs, and producing a cost savings estimated at approximately $80.5 million/year. EPA is also creating disposal requirements for PCB bulk product waste. This provision, which affects primarily generators of automobile shredder wastes and building demolition wastes, disposal of ship hulls, and PCB-Contaminated porous surfaces, generates savings of $593.4 million/year relative to the existing regulation. The savings relative to EPA policy are much smaller ($98.4 million/year) because EPA policy has allowed disposal of automobile shredder fluff as municipal solid waste. The annual savings for the disposal of ship hulls using the special circumstances baseline is also lower ($68.4 million) because the Navy is already disposing of ship hulls in a manner consistent with this rule.

Several provisions will affect electric utilities and industrial and nonindustrial entities that own PCB-Contaminated Electrical Equipment and generate PCB waste. The largest cost item is that for training industry personnel about the numerous new provisions of the final regulation. The first-year costs of this training are estimated at $6.5 million. Annualized over 10 years, this estimated cost is approximately $9.8 million per year. Numerous other items generate much smaller costs or cost savings. Cost-generating provisions include requirements for transformer registration, records of inspections and PCB cleanup activities, and storage for reuse. Savings-generating provisions include those that reduce the administrative burdens for obtaining approvals to decontaminate equipment, requirements for disposal of fluorescent light ballasts, and temporary storage of liquid PCBs.

The following table provides aggregate annual costs and cost savings estimates.

Aggregate Costs and Cost Savings ($Millions Per Year)

	Baseline Assumption:		
	Special Circumstances	EPA Policy	Existing Regulation
Compliance Costs[a]	13.0	13.0	13.0
Cost Savings	161.1	191.1	749.1
Net Cost Savings	148.1	178.1	736.1

[a]Compliance costs are identical regardless of the baseline used. All regulatory amendments generating compliance costs are entirely new. Totals do not add due to rounding.

B. Regulatory Flexibility Act

Pursuant to section 605(b) of the Regulatory Flexibility Act (5 U.S.C. 601

et seq.), the Agency hereby certifies that this regulatory action will not have a significant economic impact on a substantial number of small entities. Information relating to this determination has been provided to the Chief Counsel for Advocacy of the Small Business Administration, and is included in the docket for this rulemaking.

The compliance costs and cost savings were distributed among the affected sectors (e.g., electric utility and non-utility entities, entities with PCB ballasts from fluorescent light fixtures, and entities operating natural gas pipelines) to identify the economic impacts throughout the economy. Most provisions will affect electric utilities and non-utility owners of PCB-Contaminated equipment or materials. Training costs represent the largest cost elements, and are annualized at approximately $9.8 million per year. Several cost savings also accrue to owners of PCB-Contaminated Electrical Equipment.

The net compliance costs (excluding the savings for PCB remediation waste) were distributed among utilities in the electric utility industry based on estimates regarding the share of PCB and PCB-Contaminated equipment owned by utilities. Ownership of such equipment was judged to be the best possible proxy for the distribution of compliance costs and cost savings by industry. In order to develop a conservative estimate of regulatory impacts on industry, the savings from remediation wastes were excluded in these calculations since savings from remediation wastes will be distributed very unevenly among firms.

Net compliance costs were distributed to entities in the electric utility industry based on the share of PCB and PCB-Contaminated equipment owned by utilities. Costs were further distributed to utilities based on the relative magnitude of electricity sales (in megawatt-hours) among various groups of utilities. Per entity compliance costs for small private utilities are estimated at $137 or 0.006% of revenues, while compliance costs for small public utilities were estimated at $36 or 0.006% of revenues. With the exclusions of certain cost saving items, as described above, the net compliance costs are quite small. They represent a negligible percentage of revenues for the affected industries. While savings will be distributed among electric utilities and industry, data are not sufficient to distribute these savings in detail by industry.

C. Paperwork Reduction Act

The information collection requirements contained in this rule have been submitted for approval to OMB under the Paperwork Reduction Act (PRA), 44 U.S.C. 3501 *et seq.*, and in accordance with the procedures at 5 CFR 1320.11. An Information Collection Request (ICR) document has been prepared by EPA (EPA ICR No.1729.02) and a copy may be obtained from Sandy Farmer, OPPE Regulatory Information Division, U.S. Environmental Protection Agency (2137), 401 M St., SW., Washington, DC 20460, by calling (202) 260-2740, or electronically by sending an e-mail message to ''farmer.sandy@epamail.epa.gov.'' An electronic copy has also been posted with the **Federal Register** notice on EPA's homepage with other information related to this action.

The information requirements contained in this rule are not effective until OMB approves them. An Agency may not conduct or sponsor, and a person is not required to respond to a collection of information subject to OMB approval under the PRA unless it displays a currently valid OMB control number. The OMB control numbers for EPA's regulations, after initial publication in the **Federal Register**, are maintained in a list at 40 CFR part 9. Upon OMB's approval, the Agency will publish a notice in the **Federal Register** to announce the OMB action and to ensure that any necessary changes are made to the list of OMB control numbers for EPA's regulations.

This information collection includes both reporting and recordkeeping requirements that are associated with the management of PCBs, PCB Items, and PCB waste. These reporting and recordkeeping requirements were implemented to ensure the Agency is knowledgeable of ongoing PCB activities (e.g., who, what, where) and that individuals using or disposing of PCBs are held accountable for their activities and can demonstrate compliance with the PCB provisions at 40 CFR part 761. EPA will use this information to ensure PCBs are managed in an environmentally safe manner and that activities are being conducted in compliance with the PCB regulations. Data collected under the transformer registration program ultimately will be provided to the EPA Regional Offices and other environmental offices, on an as requested basis (e.g., State environmental agencies, fire response personnel, etc.). Some data will be used to evaluate whether an unreasonable risk of injury to health or the environment will ensue from the respondents' PCB activities. Some data will be used to supplement the Office of Pollution Prevention and Toxics' (OPPT) data base on the identity and location of individuals who engage in PCB waste handling activities. Many of these requirements are triggered only by an individual's need to address a particular PCB scenario, while other requirements apply to the universe of individuals who use, process, distribute in commerce, or dispose of PCBs.

EPA anticipates that no one individual would be subject to all of the requirements contained in this rule. Responses to the collection of information are mandatory (see 40 CFR part 761). The burden to respondents for complying with this information collection is estimated to total 1,786,153 hours per year, with an annual cost of $78,422,831 which includes $20,819,000 for the acquisition of training services unaffiliated with specific respondent hours. Cost without training services is $57,603,831. These totals are based on an average burden range of 15 minutes to 550 hours per response for an estimated 68,079 respondents submitting 24 reports, and an average burden range of 50 minutes to 60 hours for an estimated 395,409 respondents maintaining required records.

Under the PRA, ''burden'' means the total time, effort, or financial resources expended by persons to generate, maintain, retain, or disclose or provide information to or for a Federal agency. This includes the time needed to review instructions; develop, acquire, install, and utilize technology and systems for the purposes of collecting, validating, and verifying information, processing and maintaining information, and disclosing and providing information; adjust the existing ways to comply with any previously applicable instructions and requirements; train personnel to be able to respond to a collection of information; search data sources; complete and review the collection of information; and transmit or otherwise disclose the information.

Send any comments on the burden estimates and any suggested methods for minimizing respondent burden, including through the use of automated collection techniques within 30 days to EPA at the address provided above, with a copy to the Office of Information and Regulatory Affairs, Office of Management and Budget, 725 17th St., NW., Washington, DC 20503, marked ''Attention: Desk Officer for EPA.'' Please remember to include the ICR number in any correspondence.

D. Unfunded Mandates Reform Act and Executive Order 12875

Pursuant to Title II of the Unfunded Mandates Reform Act of 1995 (Pub. L. 104-4), EPA has determined that this regulatory action does not contain any ''unfunded mandates,'' as described by the Act, for State, local or tribal governments, or the private sector. Nor does this action result in the expenditure of $100 million or more by any State, local, or tribal governments, or by anyone in the private sector. Furthermore, no nonfederal governmental inspections or activities are required under the final regulation. The relevant costs associated with this regulation are described in the Executive Order 12866 section above. Therefore, this action is not subject to the requirements of UMRA, or require special consultation under Executive Order 12875, entitled *Enhancing the Intergovernmental Partnership* (58 FR 58093, October 28, 1993).

E. Executive Order 12898

Pursuant to Executive Order 12898, entitled *Federal Actions to Address Environmental Justice in Minority Populations and Low-Income Populations* (59 FR 7629, February 16, 1994), the Agency has considered environmental justice-related issues with regard to the potential impacts of this action on the environmental and health conditions in low-income and minority communities. As the Executive Order states, each Federal agency is required to ''analyze the environmental effects, including human health, economic and social effects, of Federal actions, including effects on minority communities and low-income communities. . . .'' Accordingly, EPA examined the impact of the PCB disposal amendments on the geographic distribution of PCB management activities, relative to the socioeconomic characteristics of the surrounding communities. The final regulation affects the use, maintenance, storage, handling, and disposal of PCB Articles. None of the areas it covers, however, will influence the socioeconomic equity of actual or potential environmental exposures to PCB wastes. Several aspects of the regulation, pertinent to this issue, are discussed below.

The final regulation will affect the manner in which electric utilities and other industrial entities maintain and store PCB-Contaminated equipment. These activities will occur predominantly at existing utility and industrial locations where they will represent a very minor portion of the facility activities. The impending changes, which are designed to reduce potential work and environmental exposures, will not influence the geographic distribution of these activities. Further, the changes are unlikely to cause job activities to be redistributed among utility and industrial workers. The changes should also produce a net decrease in risk to the affected workers. In any case, there is no apparent avenue through which these changes might affect environmental justice considerations.

The final regulation will influence the disposal of PCB-Contaminated wastes but does not directly affect the siting of PCB management facilities. While the regulation will allow possible shifts in how PCBs are disposed among facilities, there is no direct influence on the location of such operations, and, therefore, no impact on the socioeconomic distribution of exposure risks.

The final regulation will allow PCB wastes to be handled at a wider range of facilities, including RCRA facilities, than under existing regulations. The final regulation will also allow low concentration PCB wastes to be disposed of in municipal solid waste facilities. In any case, the regulation might have a slight influence on the mix of wastes disposed of at these various facilities but will not otherwise affect the operation or maintenance of those facilities.

A recent report by the U.S. General Accounting Office entitled *Hazardous and Nonhazardous Waste: Demographics of People Living Near Waste Facilities* (1995) reviewed environmental justice research studies, and reached no definitive conclusion on whether existing RCRA facilities and other hazardous waste sites are located disproportionately in poor or minority neighborhoods. Studies that focused on commercial RCRA facilities (excluding Superfund and other uncontrolled hazardous waste sites, which are less relevant to this analysis) also did not find these facilities to be disproportionately located in poor or minority neighborhoods.

Based on the final rule's lack of influence on waste facility siting or the socioeconomic distribution of waste handling activities, EPA concludes that the final rule has no impact on environmental justice.

F. Executive Order 13045

This action is not subject to Executive Order 13045, entitled *Protection of Children from Environmental Health Risks and Safety Risks* (62 FR 19885, April 23, 1997), because this action was initiated and the Notice of Proposed Rulemaking for this action published prior to the date of the order. Under section 2-202 of the Executive Order, the order only applies to those regulatory actions initiated after the date of the order or for which a Notice of Proposed Rulemaking is published 1 year after the date of the order. In any case, although OMB has determined that this is an economically significant action (see Unit VIII.A. above), this regulatory action does not involve any environmental health or safety risks that the Agency has reason to believe may disproportionately affect children. In fact, the substantial net cost savings that are generated by the final rule, will not reduce the benefits associated with the protection of human health or the environment afforded through the original regulation.

G. National Technology Transfer and Advancement Act (NTTAA)

Under section 12(d) of the National Technology Transfer and Advancement Act (NTTAA), (15 U.S.C. 272 note) the Agency is required to use voluntary consensus standards in its regulatory activities unless to do so would be inconsistent with applicable law or otherwise impractical. Voluntary consensus standards are technical standards (e.g., materials specifications, test methods, sampling procedures, business practice, etc.) which are developed or adopted by voluntary consensus standard bodies. Where available and potentially applicable voluntary consensus standards are not used by EPA, the Act requires the Agency to provide Congress, through OMB, an explanation of the reasons for not using such standards.

Although the PCB program has historically used, and continues to rely on, standards that have been developed under a voluntary consensus process, today's final rule imposes procedures that must be used in order to abandon PCB articles, as well as for sampling, site characterization, validation of decontamination efforts, and the disposal of various PCB wastes. The disposal options contained in this rule are much more flexible than those that currently exist. Given this level of flexibility, EPA must ensure that the ultimate disposal options which are selected by regulated entities are utilized in a manner that is protective of health and the environment. As a result, EPA is promulgating the procedures and requirements in subparts M through Q of this rule to ensure consistency in both the way disposal determinations are made and in the manner in which similar PCB wastes are disposed of. These requirements were subject to the

notice and comment process which is prescribed by the Administrative Procedures Act. All comments were reviewed and the requirements of subparts M through Q were modified as a result of EPA's consideration of those comments. A discussion of some of the changes that were made appears in Units IV.E.4., 8. and 9. of the preamble to this rule.

H. Submission to Congress and the General Accounting Office

The Congressional Review Act, 5 U.S.C. 801 *et seq.*, as added by the Small Business Regulatory Enforcement Fairness Act of 1996, generally provides that before a rule may take effect, the agency promulgating the rule must submit a rule report, which includes a copy of the rule, to each House of the Congress and to the Comptroller General of the United States. EPA will submit a report containing this rule and other required information to the U.S. Senate, the U.S. House of Representatives, and the Comptroller General of the United States prior to publication of the rule in the **Federal Register**. This rule is a ''major rule'' as defined by 5 U.S.C. 804(2).

List of Subjects

40 CFR Part 750

Environmental protection, Administrative practice and procedure, Chemicals, Hazardous substances.

40 CFR Part 761

Environmental protection, Hazardous substances, Labeling, Polychlorinated biphenyls (PCBs), Reporting and recordkeeping requirements.

Dated: June 18, 1998.

Carol M. Browner,

Administrator.

Therefore, 40 CFR chapter I is amended as follows:

PART 750—[AMENDED]

1. In part 750:

a. The authority citation for part 750 continues to read as follows:

Authority: 15 U.S.C. 2605.

§ 750.31 [Amended]

b. In § 750.31(c)(9) introductory text and (c)(9)(vii), by revising the references to ''paragraphs (d)(1) through (8)'' to read ''paragraphs (c)(1) through (c)(8)''.

c. In § 750.31(c)(9)(ii) and (c)(9)(iii), by revising the references to ''paragraphs (d)(1), (3) and (5)'' to read ''paragraphs (c)(1), (c)(3), and (c)(5)''.

PART 761—[AMENDED]

2. In part 761:

a. The authority citation for part 761 continues to read as follows:

Authority: 15 U.S.C. 2605, 2607, 2611, 2614, and 2616.

b. In § 761.1, by revising paragraph (b) to read as follows:

§ 761.1 Applicability.

* * * * *

(b)(1) This part applies to all persons who manufacture, process, distribute in commerce, use, or dispose of PCBs or PCB Items. Substances that are regulated by this part include, but are not limited to: dielectric fluids; solvents; oils; waste oils; heat transfer fluids; hydraulic fluids; paints or coatings; sludges; slurries; sediments; dredge spoils; soils; materials containing PCBs as a result of spills; and other chemical substances or combinations of substances, including impurities and byproducts and any byproduct, intermediate, or impurity manufactured at any point in a process.

(2) Unless otherwise noted, PCB concentrations shall be determined on a weight-per-weight basis (e.g., milligrams per kilogram), or for liquids, on a weight-per-volume basis (e.g., milligrams per liter) if the density of the liquid is also reported. Unless otherwise provided, PCBs are quantified based on the formulation of PCBs present in the material analyzed. For example, measure Aroclor™ 1242 PCBs based on a comparison with Aroclor™ 1242 standards. Measure individual congener PCBs based on a comparison with individual PCB congener standards.

(3) Most provisions in this part apply only if PCBs are present in concentrations above a specified level. Provisions that apply to PCBs at concentrations of <50 ppm apply also to contaminated surfaces at PCB concentrations of ≤10/100 cm^2. Provisions that apply to PCBs at concentrations of ≥50 to <500 ppm apply also to contaminated surfaces at PCB concentrations of >10/100 cm^2 to <100 μg/100 cm^2. Provisions that apply to PCBs at concentrations of ≥500 ppm apply also to contaminated surfaces at PCB concentrations of ≥100 μg/100 cm^2.

(4) PCBs can be found in liquid, non-liquid and multi-phasic (combinations of liquid and non-liquid) forms. A person should use the following criteria to determine PCB concentrations to determine which provisions of this part apply to such PCBs.

(i) Any person determining PCB concentrations for non-liquid PCBs must do so on a dry weight basis.

(ii) Any person determining PCB concentrations for liquid PCBs must do so on a wet weight basis. Liquid PCBs containing more than 0.5 percent by weight non-dissolved material shall be analyzed as multi-phasic non-liquid/liquid mixtures.

(iii) Any person determining the PCB concentration of samples containing PCBs and non-dissolved non-liquid materials ≥0.5 percent, must separate the non-dissolved materials into non-liquid PCBs and liquid PCBs. For multi-phasic non-liquid/liquid or liquid/liquid mixtures, the phases shall be separated before chemical analysis. Following phase separation, the PCB concentration in each non-liquid phase shall be determined on a dry weight basis and the PCB concentration in each liquid phase shall be determined separately on a wet weight basis.

(iv) Any person disposing of multi-phasic non-liquid/liquid or liquid/liquid mixtures must use the PCB disposal requirements that apply to the individual phase with the highest PCB concentration except where otherwise noted. Alternatively, phases may be separated and disposed of using the PCB disposal requirements that apply to each separated, single-phase material.

(5) No person may avoid any provision specifying a PCB concentration by diluting the PCBs, unless otherwise specifically provided.

(6) Unless otherwise specified, references to weights or volumes of PCBs in this part apply to the total weight or total volume of the material (oil, soil, debris, etc.) that contains regulated concentrations of PCBs, not the calculated weight or volume of only the PCB molecules contained in the material.

* * * * *

c. By adding a new § 761.2 to read as follows:

§ 761.2 PCB concentration assumptions for use.

(a)(1) Any person may assume that transformers with <3 pounds (1.36 kilograms (kgs)) of fluid, circuit breakers, reclosers, oil-filled cable, and rectifiers whose PCB concentration is not established contain PCBs at <50 ppm.

(2) Any person must assume that mineral oil-filled electrical equipment that was manufactured before July 2, 1979, and whose PCB concentration is not established is PCB-Contaminated Electrical Equipment (i.e., contains ≥50 ppm PCB, but <500 ppm PCB). All pole-top and pad-mounted distribution transformers manufactured before July 2, 1979, must be assumed to be mineral-oil filled. Any person may assume that electrical equipment manufactured after July 2, 1979, is non-PCB (i.e., <50 ppm

PCBs). If the date of manufacture of mineral oil-filled electrical equipment is unknown, any person must assume it to be PCB-Contaminated.

(3) Any person must assume that a transformer manufactured prior to July 2, 1979, that contains 1.36 kg (3 pounds) or more of fluid other than mineral oil and whose PCB concentration is not established, is a PCB Transformer (i.e., ≧500 ppm). If the date of manufacture or the type of dielectric fluid is unknown, any person must assume the transformer to be a PCB Transformer.

(4) Any person must assume that a capacitor manufactured prior to July 2, 1979, whose PCB concentration is not established contains ≥500 ppm PCBs. Any person may assume that a capacitor manufactured after July 2, 1979, is non-PCB (i.e., <50 ppm PCBs). If the date of manufacture is unknown, any person must assume the capacitor contains ≥500 ppm PCBs. Any person may assume that a capacitor marked at the time of manufacture with the statement ''No PCBs'' in accordance with § 761.40(g) is non-PCB.

(b) PCB concentration may be established by:

(1) Testing the equipment; or

(2)(i) A permanent label, mark, or other documentation from the manufacturer of the equipment indicating its PCB concentration at the time of manufacture; and

(ii) Service records or other documentation indicating the PCB concentration of all fluids used in servicing the equipment since it was first manufactured.

d. In § 761.3, by revising the definitions for ''Commercial storer of PCB waste,'' ''PCB-Contaminated Electrical Equipment,'' ''PCB Item,'' ''PCB Transformer,'' and paragraph (2) of ''Qualified Incinerator''; by removing the definitions for ''Basel Convention'' and ''Emergency Situation''; and by adding alphabetically 36 definitions to read as follows:

§ 761.3 Definitions.

* * * * *

Air compressor system means air compressors, piping, receiver tanks, volume tanks and bottles, dryers, airlines, and related appurtenances.

* * * * *

ASTM means American Society for Testing and Materials, 1916 Race Street, Philadelphia, PA 19103.

* * * * *

CERCLA means the Comprehensive Environmental Response, Compensation, and Liability Act (42 U.S.C. 9601-9657).

* * * * *

Cleanup site means the areal extent of contamination and all suitable areas in very close proximity to the contamination necessary for implementation of a cleanup of PCB remediation waste, regardless of whether the site was intended for management of waste.

* * * * *

Commercial storer of PCB waste means the owner or operator of each facility that is subject to the PCB storage unit standards of § 761.65(b)(1) or (c)(7) or meets the alternate storage criteria of § 761.65(b)(2), and who engages in storage activities involving either PCB waste generated by others or that was removed while servicing the equipment owned by others and brokered for disposal. The receipt of a fee or any other form of compensation for storage services is not necessary to qualify as a commercial storer of PCB waste. A generator who only stores its own waste is subject to the storage requirements of § 761.65, but is not required to obtain approval as a commercial storer. If a facility's storage of PCB waste generated by others at no time exceeds a total of 500 gallons of liquid and/or non-liquid material containing PCBs at regulated levels, the owner or operator is a commercial storer but is not required to seek EPA approval as a commercial storer of PCB waste. Storage of one company's PCB waste by a related company is not considered commercial storage. A ''related company'' includes, but is not limited to: a parent company and its subsidiaries; sibling companies owned by the same parent company; companies owned by a common holding company; members of electric cooperatives; entities within the same Executive agency as defined at 5 U.S.C. 105; and a company having a joint ownership interest in a facility from which PCB waste is generated (such as a jointly owned electric power generating station) where the PCB waste is stored by one of the co-owners of the facility. A ''related company'' does not include another voluntary member of the same trade association. Change in ownership or title of a generator's facility, where the generator is storing PCB waste, does not make the new owner of the facility a commercial storer of PCB waste.

* * * * *

DOT means the United States Department of Transportation.

Dry weight means the weight of the sample, excluding the weight of the water in the sample. Prior to chemical analysis the water may be removed by any reproducible method that is applicable to measuring PCBs in the sample matrix at the concentration of concern, such as air drying at ambient temperature, filtration, decantation, heating at low temperature followed by cooling in the presence of a desiccant, or other processes or combinations of processes which would remove water but not remove PCBs from the sample. Analytical procedures which calculate the dry weight concentration by adjusting for moisture content may also be used.

* * * * *

Facility means all contiguous land, and structures, other appurtenances, and improvements on the land, used for the treatment, storage, or disposal of PCB waste. A facility may consist of one or more treatment, storage, or disposal units.

* * * * *

High occupancy area means any area where PCB remediation waste has been disposed of on-site and where occupancy for any individual not wearing dermal and respiratory protection for a calendar year is: 840 hours or more (an average of 16.8 hours or more per week) for non-porous surfaces and 335 hours or more (an average of 6.7 hours or more per week) for bulk PCB remediation waste. Examples could include a residence, school, day care center, sleeping quarters, a single or multiple occupancy 40 hours per week work station, a school class room, a cafeteria in an industrial facility, a control room, and a work station at an assembly line.

* * * * *

Liquid PCBs means a homogenous flowable material containing PCBs and no more than 0.5 percent by weight non-dissolved material.

Low occupancy area means any area where PCB remediation waste has been disposed of on-site and where occupancy for any individual not wearing dermal and respiratory protection for a calendar year is: less than 840 hours (an average of 16.8 hours per week) for non-porous surfaces and less than 335 hours (an average of 6.7 hours per week) for bulk PCB remediation waste. Examples could include an electrical substation or a location in an industrial facility where a worker spends small amounts of time per week (such as an unoccupied area outside a building, an electrical equipment vault, or in the non-office space in a warehouse where occupancy is transitory).

* * * * *

Natural gas pipeline system means natural gas gathering facilities, natural gas pipe, natural gas compressors, natural gas storage facilities, and natural gas pipeline appurtenances (including instrumentation and vessels directly in contact with transported natural gas such as valves, regulators, drips, filter

separators, etc., but not including air compressors).

* * * * *

Non-liquid PCBs means materials containing PCBs that by visual inspection do not flow at room temperature (25 °C or 77 °F) or from which no liquid passes when a 100 g or 100 ml representative sample is placed in a mesh number 60 ± 5 percent paint filter and allowed to drain at room temperature for 5 minutes.

* * * * *

Non-porous surface means a smooth, unpainted solid surface that limits penetration of liquid containing PCBs beyond the immediate surface. Examples are: smooth uncorroded metal; natural gas pipe with a thin porous coating originally applied to inhibit corrosion; smooth glass; smooth glazed ceramics; impermeable polished building stone such as marble or granite; and high density plastics, such as polycarbonates and melamines, that do not absorb organic solvents.

* * * * *

NTIS means the National Technical Information Service, U.S. Department of Commerce, 5285 Port Royal Rd., Springfield, VA 22161.

* * * * *

Open burning means the combustion of any PCB regulated for disposal, in a manner not approved or otherwise allowed under subpart D of this part, and without any of the following:

(1) Control of combustion air to maintain adequate temperature for efficient combustion.

(2) Containment of the combustion reaction in an enclosed device to provide sufficient residence time and mixing for complete combustion.

(3) Control of emission of the gaseous combustion products.

* * * * *

PCB bulk product waste means waste derived from manufactured products containing PCBs in a non-liquid state, at any concentration where the concentration at the time of designation for disposal was ≥50 ppm PCBs. PCB bulk product waste does not include PCBs or PCB Items regulated for disposal under § 761.60(a) through (c), § 761.61, § 761.63, or § 761.64. PCB bulk product waste includes, but is not limited to:

(1) Non-liquid bulk wastes or debris from the demolition of buildings and other man-made structures manufactured, coated, or serviced with PCBs. PCB bulk product waste does not include debris from the demolition of buildings or other man-made structures that is contaminated by spills from regulated PCBs which have not been disposed of, decontaminated, or otherwise cleaned up in accordance with subpart D of this part.

(2) PCB-containing wastes from the shredding of automobiles, household appliances, or industrial appliances.

(3) Plastics (such as plastic insulation from wire or cable; radio, television and computer casings; vehicle parts; or furniture laminates); preformed or molded rubber parts and components; applied dried paints, varnishes, waxes or other similar coatings or sealants; caulking; adhesives; paper; Galbestos; sound deadening or other types of insulation; and felt or fabric products such as gaskets.

(4) Fluorescent light ballasts containing PCBs in the potting material.

* * * * *

PCB Capacitor means any capacitor that contains ≥500 ppm PCB. Concentration assumptions applicable to capacitors appear under § 761.2.

* * * * *

PCB-Contaminated means a non-liquid material containing PCBs at concentrations ≥50 ppm but <500 ppm; a liquid material containing PCBs at concentrations ≥50 ppm but <500 ppm or where insufficient liquid material is available for analysis, a non-porous surface having a surface concentration >10 μg/100 cm^2 but <100 μg/100 cm^2, measured by a standard wipe test as defined in § 761.123.

PCB-Contaminated Electrical Equipment means any electrical equipment including, but not limited to, transformers (including those used in railway locomotives and self-propelled cars), capacitors, circuit breakers, reclosers, voltage regulators, switches (including sectionalizers and motor starters), electromagnets, and cable, that contains PCBs at concentrations of ≥50 ppm and <500 ppm in the contaminating fluid. In the absence of liquids, electrical equipment is PCB-Contaminated if it has PCBs at >10 μg/100 cm^2 and <100 μg/100 cm^2 as measured by a standard wipe test (as defined in § 761.123) of a non-porous surface.

* * * * *

PCB field screening test means a portable analytical device or kit which measures PCBs. PCB field screening tests usually report less than or greater than a specific numerical PCB concentration. These tests normally build in a safety factor which increases the probability of a false positive report and decreases the probability of a false negative report. PCB field screening tests do not usually provide: an identity record generated by an instrument; a quantitative comparison record from calibration standards; any identification of PCBs; and/or any indication or identification of interferences with the measurement of the PCBs. PCB field screening test technologies include, but are not limited to, total chlorine colorimetric tests, total chlorine x-ray fluorescence tests, total chlorine microcoulometric tests, and rapid immunoassay tests.

PCB household waste means PCB waste that is generated by residents on the premises of a temporary or permanent residence for individuals (including individually owned or rented units of a multi-unit construction), and that is composed primarily of materials found in wastes generated by consumers in their homes. PCB household waste includes unwanted or discarded non-commercial vehicles (prior to shredding), household items, and appliances or appliance parts and wastes generated on the premises of a residence for individuals as a result of routine household maintenance by or on behalf of the resident. Bulk or commingled liquid PCB wastes at concentrations of ≥50 ppm, demolition and renovation wastes, and industrial or heavy duty equipment with PCBs are not household wastes.

* * * * *

PCB Item means any PCB Article, PCB Article Container, PCB Container, PCB Equipment, or anything that deliberately or unintentionally contains or has as a part of it any PCB or PCBs.

* * * * *

PCB/radioactive waste means PCBs regulated for disposal under subpart D of this part that also contain source, special nuclear, or byproduct material subject to regulation under the Atomic Energy Act of 1954, as amended, or naturally-occurring or accelerator-produced radioactive material.

* * * * *

PCB remediation waste means waste containing PCBs as a result of a spill, release, or other unauthorized disposal, at the following concentrations: Materials disposed of prior to April 18, 1978, that are currently at concentrations ≥50 ppm PCBs, regardless of the concentration of the original spill; materials which are currently at any volume or concentration where the original source was ≥500 ppm PCB beginning on April 18, 1978, or ≥50 ppm PCB beginning on July 2, 1979; and materials which are currently at any concentration if the PCBs are from a source not authorized for use under this part. PCB remediation waste means soil, rags, and other debris generated as a result of any PCB spill cleanup, including, but not limited to:

(1) Environmental media containing PCBs, such as soil and gravel; dredged materials, such as sediments, settled

sediment fines, and aqueous decantate from sediment.

(2) Sewage sludge containing <50 ppm PCBs and not in use according to § 761.20(a)(4); PCB sewage sludge; commercial or industrial sludge contaminated as the result of a spill of PCBs including sludges located in or removed from any pollution control device; aqueous decantate from an industrial sludge.

(3) Buildings and other man-made structures, such as concrete or wood floors or walls contaminated from a leaking PCB or PCB-Contaminated transformer, porous surfaces and non-porous surfaces.

* * * * *

PCB sewage sludge means sewage sludge as defined in 40 CFR 503.9(w) which contains ≥50 ppm PCBs, as measured on a dry weight basis.

* * * * *

PCB Transformer means any transformer that contains ≥500 ppm PCBs. For PCB concentration assumptions applicable to transformers containing 1.36 kilograms (3 lbs.) or more of fluid other than mineral oil, see § 761.2. For provisions permitting reclassification of electrical equipment, including PCB Transformers, containing ≥500 ppm PCBs to PCB-Contaminated Electrical Equipment, see § 761.30(a) and (h).

* * * * *

Performance-based organic decontamination fluid (PODF) means kerosene, diesel fuel, terpene hydrocarbons, and terpene hydrocarbon/alcohol mixtures.

* * * * *

Porous surface means any surface that allows PCBs to penetrate or pass into itself including, but not limited to, paint or coating on metal; corroded metal; fibrous glass or glass wool; unglazed ceramics; ceramics with a porous glaze; porous building stone such as sandstone, travertine, limestone, or coral rock; low-density plastics such as styrofoam and low-density polyethylene; coated (varnished or painted) or uncoated wood; concrete or cement; plaster; plasterboard; wallboard; rubber; fiberboard; chipboard; asphalt; or tar paper. For purposes of cleaning and disposing of PCB remediation waste, porous surfaces have different requirements than non-porous surfaces.

* * * * *

Qualified incinerator means one of the following:

* * * * *

(2) A high efficiency boiler which complies with the criteria of § 761.71(a)(1), and for which the operator has given written notice to the appropriate EPA Regional Administrator in accordance with the notification requirements for the burning of mineral oil dielectric fluid under § 761.71(a)(2).

* * * * *

RCRA means the Resource Conservation and Recovery Act (40 U.S.C. 6901 *et seq.*).

* * * * *

Research and development (R&D) for PCB disposal means demonstrations for commercial PCB disposal approvals, pre-demonstration tests, tests of major modifications to previously approved PCB disposal technologies, treatability studies for PCB disposal technologies which have not been approved, development of new disposal technologies, and research on chemical transformation processes including, but not limited to, biodegradation.

* * * * *

Sewage sludge means sewage sludge as defined in § 503.9(w) of this chapter that contains <50 ppm (on a dry weight basis) PCBs.

* * * * *

Soil washing means the extraction of PCBs from soil using a solvent, recovering the solvent from the soil, separating the PCBs from the recovered solvent for disposal, and then disposal or reuse of the solvent.

Standard wipe sample means a sample collected for chemical extraction and analysis using the standard wipe test as defined in § 761.123. Except as designated elsewhere in part 761, the minimum surface area to be sampled shall be 100 cm^2.

* * * * *

SW-846 means the document having the title ''SW-846, Test Methods for Evaluating Solid Waste,'' which is available from either the National Technical Information Service (NTIS, U.S. Department of Commerce, 5285 Port Royal Rd., Springfield, VA 22161, telephone: (703) 487-4650 or the U.S. Government Printing Office (U.S. GPO, 710 North Capitol St., NW., Washington, DC 20401, telephone: (202) 783-3238.

* * * * *

TSCA means the Toxic Substances Control Act (15 U.S.C. 2601 *et seq.*).

* * * * *

TSCA PCB Coordinated Approval means the process used to recognize other Federal or State waste management documents governing the storage, cleanup, treatment, and disposal of PCB wastes. It is the mechanism under TSCA for accomplishing review, coordination, and approval of PCB waste management activities which are conducted outside of the TSCA PCB approval process, but require approval under the TSCA PCB regulations at 40 CFR part 761.

* * * * *

Unit means a particular building, structure, or cell used to manage PCB waste (including, but not limited to, a building used for PCB waste storage, a landfill, an industrial boiler, or an incinerator).

U.S. GPO means the U.S. Government Printing Office, 710 North Capitol St., NW., Washington, DC 20401.

* * * * *

Wet weight means reporting chemical analysis results by including either the weight, or the volume and density, of all liquids.

* * * * *

e. In § 761.19, the table in paragraph (b), in the second column, by revising the reference to ''§ 761.60(a)(3)(iii)(B)(6)'' wherever it appears to read ''§ 761.71(b)(2)(vi)'' and by revising the introductory text of paragraph (b) to read as follows:

§ 761.19 References.

* * * * *

(b) *Incorporation by reference*. The following material is incorporated by reference, and is available for inspection at the Office of the Federal Register, 800 North Capitol St., NW., Suite 700, Washington, DC. These incorporations by reference were approved by the Director of the Office of the Federal Register. These materials are incorporated as they exist on the date of approval and a notice of any change in these materials will be published in the **Federal Register**. Copies of the incorporated material are available for inspection at the TSCA Nonconfidential Information Center (7407), Rm. B607, Northeast Mall, Office of Pollution Prevention and Toxics, Environmental Protection Agency, 401 M St., SW., Washington, DC 20460. Copies of the incorporated material may be obtained from the American Society for Testing and Materials (ASTM), 1916 Race Street, Philadelphia, PA 19103.

* * * * *

f. Throughout part 761, by revising the references to ''Director, Chemical Management Division'' and ''Director, CMD,'' to read ''Director, National Program Chemicals Division''.

g. In § 761.20, by revising the section heading and paragraphs (a)(4), (c)(2), and (c)(5) to read as follows:

§ 761.20 Prohibitions and exceptions.

* * * * *

(a) * * *

(4) An authorization is not required to use sewage sludge where the uses are regulated at parts 257, 258, and 503 of this chapter. No person may blend or otherwise dilute PCBs regulated for disposal, including PCB sewage sludge

and sewage sludge not used pursuant to parts 257, 258, and 503 of this chapter, for purposes of use or to avoid disposal requirements under this part. Except as explicitly provided in subpart D of this part, no person may dispose of regulated PCB wastes including, but not limited to, PCB remediation waste, PCB bulk product waste, PCBs, and PCB industrial sludges, into treatment works, as defined in § 503.9(aa) of this chapter.

* * * * *

(c) * * *

(2) Any person may process and distribute in commerce for disposal PCBs at concentrations of ≥50 ppm, or PCB Items with PCB concentrations of ≥50 ppm, if they comply with the applicable provisions of this part.

(i) Processing activities which are primarily associated with and facilitate storage or transportation for disposal do not require a TSCA PCB storage or disposal approval.

(ii) Processing activities which are primarily associated with and facilitate treatment, as defined in § 261.10 of this chapter, or disposal require a TSCA PCB disposal approval unless they are part of an existing approval, are part of a self-implementing activity under § 761.61(a) or § 761.79(b) or (c), or are otherwise specifically allowed under subpart D of this part.

(iii) With the exception of provisions in § 761.60(a)(2) and (a)(3), in order to meet the intent of § 761.1(b), processing, diluting, or otherwise blending of waste prior to being introduced into a disposal unit for purposes of meeting a PCB concentration limit shall be done in accordance with a TSCA PCB disposal approval or comply with the requirements of § 761.79.

(iv) Where the rate of delivering liquids or non-liquids into a PCB disposal unit is an operating parameter, this rate shall be a condition of the TSCA PCB disposal approval for the unit when an approval is required.

* * * * *

(5) Decontaminated materials. Any person may distribute in commerce equipment, structures, or other liquid or non-liquid materials that were contaminated with PCBs ≥50 ppm, including those not otherwise authorized for distribution in commerce under this part, provided that one of the following applies:

(i) The materials were decontaminated in accordance with a TSCA PCB disposal approval issued under subpart D of this part, with § 761.79, or with applicable EPA PCB spill cleanup policies in effect at the time of the decontamination.

(ii) If not previously decontaminated, the materials now meet an applicable decontamination standard in § 761.79(b).

* * * * *

h. Section 761.30 is amended as follows:

i. Paragraph (a)(1) is amended by removing (a)(1)(iii)(A) through (a)(1)(iii)(C)(*2*)(*i*), and (a)(1)(iii)(D), and by redesignating (a)(1)(iii)(C)(*2*)(*ii*) and (a)(1)(iii)(C)(*2*)(*iii*) as (a)(1)(iii)(A) and (a)(1)(iii)(B), respectively; by revising paragraph (a)(1)(vi); in paragraph (a)(1)(vii)(C), by revising the phrase ''280/120 volt radial'' to read ''208/120 volt radial''; in paragraph (a)(1)(x) by revising the reference to ''§ 761.60'' to read ''subpart D of this part''; by adding new paragraphs (a)(1)(xii)(I) and (a)(1)(xii)(J); in paragraph (a)(1)(xv) introductory text by revising the reference to ''§ 761.3'' to read ''§ 761.2''; and by revising paragraph (a)(1)(xv)(D).

ii. Paragraph (b) is amended by revising paragraph (b)(1) and by removing paragraph (b)(2)(ii) and redesignating paragraphs (b)(2)(iii) through (b)(2)(vii) as (b)(2)(ii) through (b)(2)(vi), respectively.

iii. By revising paragraphs (c), (d), (e), (h)(1)(ii), (i), (j), (k) and (p); removing and reserving paragraphs (g), (n), and (o); and adding paragraphs (h)(1)(iii), (q), (r), (s), (t), and (u).

The revisions and additions read as follows:

§ 761.30 Authorizations.

(a) * * *

(1) * * *

(vi)(A) No later than December 28, 1998 all owners of PCB Transformers, including those in storage for reuse, must register their transformers with the Environmental Protection Agency, National Program Chemicals Division, Office of Pollution Prevention and Toxics (7404), 401 M St., SW., Washington, DC 20460. This registration requirement is subject to the limitations in paragraph (a)(1) of this section.

(*1*) A transformer owner who assumes a transformer is a PCB-Contaminated transformer, and discovers after December 28, 1998 that it is a PCB-Transformer, must register the newly-identified PCB Transformer, in writing, with the Environmental Protection Agency no later than 30 days after it is identified as such. This requirement does not apply to transformer owners who have previously registered with the EPA PCB Transformers located at the same address as the transformer that they assumed to be PCB-Contaminated and later determined to be a PCB Transformer.

(*2*) A person who takes possession of a PCB Transformer after December 28, 1998 is not required to register or re-register the transformer with the EPA.

(B) Any person submitting a registration under this section must include:

(*1*) Company name and address.

(*2*) Contact name and telephone number.

(*3*) Address where these transformers are located. For mobile sources such as ships, provide the name of the ship.

(*4*) Number of PCB Transformers and the total weight in kilograms of PCBs contained in the transformers.

(*5*) Whether any transformers at this location contain flammable dielectric fluid (optional).

(*6*) Signature of the owner, operator, or other authorized representative certifying the accuracy of the information submitted.

(C) A transformer owner must retain a record of each PCB Transformer's registration (e.g., a copy of the registration and the return receipt signed by EPA) with the inspection and maintenance records required for each PCB Transformer under paragraph (a)(1)(xii)(I) of this section.

(D) A transformer owner must comply with all requirements of paragraph (a)(1)(vi)(A) of this section to continue the PCB-Transformer's authorization for use, or storage for reuse, pursuant to this section and TSCA section 6(e)(2)(B).

* * * * *

(xii) * * *

(I) Record of the registration of PCB Transformer(s).

(J) Records of transfer of ownership of a PCB Item (excluding intact non-leaking small capacitors) with a PCB concentration of ≥500 ppm, when records are not maintained in compliance with § 761.180(a)(2).

* * * * *

(xv) * * *

(D) Register the PCB Transformer in writing with the building owner within 30 days of discovery.

* * * * *

(b) * * *

(1) *Use restrictions.* After July 1, 1986, use of railroad transformers that contain dielectric fluids with a PCB concentration >1,000 ppm is prohibited.

* * * * *

(c) *Use in mining equipment.* After January 1, 1982, PCBs may be used in mining equipment only at a concentration level of <50 ppm.

(d) *Use in heat transfer systems.* After July 1, 1984, PCBs may be used in heat transfer systems only at a concentration level of < 50 ppm. Heat transfer systems that were in operation after July 1, 1984, with a concentration level of <50 ppm PCBs may be serviced to maintain a concentration level of <50 ppm PCBs.

Heat transfer systems may only be serviced with fluids containing <50 ppm PCBs.

(e) *Use in hydraulic systems.* After July 1, 1984, PCBs may be used in hydraulic systems only at a concentration level of <50 ppm. Hydraulic systems that were in operation after July 1, 1984, with a concentration level of <50 ppm PCBs may be serviced to maintain a concentration level of <50 ppm PCBs. Hydraulic systems may only be serviced with fluids containing <50 ppm PCBs.

* * * * *

(g) [Reserved]

(h) * * *

(1) * * *

(ii) Use and storage for reuse of voltage regulators which contain 1.36 kilograms (3 lbs) or more of dielectric fluid with a PCB concentration of ≥500 ppm are subject to the following provisions:

(A) The owner of the voltage regulator must mark its location in accordance with § 761.40.

(B) If a voltage regulator is involved in a fire-related incident, the owner must immediately report the incident to the National Response Center (Toll-free: 1–800–424–8802; in Washington, DC: 202–426–2675). A fire-related incident is defined as any incident that involves the generation of sufficient heat and/or pressure, by any source, to result in the violent or non-violent rupture of the voltage regulator and the release of PCBs.

(C) The owner of the voltage regulator must inspect it in accordance with the requirements of paragraphs (a)(1)(ix), (a)(1)(xiii), and (a)(1)(xiv) of this section that apply to PCB Transformers.

(D) The owner of the voltage regulator must comply with the recordkeeping and reporting requirements at § 761.180.

(iii) The owner of a voltage regulator that assumes it contains <500 ppm PCBs as provided in § 761.2, and discovers by testing that it is contaminated at ≥500 ppm PCBs, must comply with paragraph (h)(1)(ii)(A) of this section 7 days after the discovery, and paragraphs (h)(1)(ii)(B), (h)(1)(ii)(C), and (h)(1)(ii)(D) of this section immediately upon discovery.

* * * * *

(i) *Use and reuse of PCBs in natural gas pipeline systems; use and reuse of PCB-Contaminated natural gas pipe and appurtenances.* (1)(i) PCBs are authorized for use in natural gas pipeline systems at concentrations <50 ppm.

(ii) PCBs are authorized for use, at concentrations ≥50 ppm, in natural gas pipeline systems not owned or operated by a seller or distributor of natural gas.

(iii)(A) PCBs are authorized for use, at concentrations ≥50 ppm, in natural gas pipeline systems owned or operated by a seller or distributor of natural gas, if the owner or operator:

(*1*) Submits to EPA, upon request, a written description of the general nature and location of PCBs ≥50 ppm in their natural gas pipeline system. Each written description shall be submitted to the EPA Regional Administrator having jurisdiction over the segment or component of the system (or the Director, National Program Chemicals Division, Office of Prevention, Pesticides, and Toxic Substances, if the system is contaminated in more than one region).

(*2*) Within 120 days after discovery of PCBs ≥50 ppm in natural gas pipeline systems, or by December 28, 1998, whichever is later, characterizes the extent of PCB contamination by collecting and analyzing samples to identify the upstream and downstream end points of the segment or component where PCBs ≥50 ppm were discovered.

(*3*) Within 120 days of characterization of the extent of PCB contamination, or by December 28, 1998, whichever is later, samples and analyzes all potential sources of introduction of PCBs into the natural gas pipeline system for PCBs ≥50 ppm. Potential sources include natural gas compressors, natural gas scrubbers, natural gas filters, and interconnects where natural gas is received upstream from the most downstream sampling point where PCBs ≥50 ppm were detected; potential sources exclude valves, drips, or other small liquid condensate collection points.

(*4*) Within 1 year of characterization of the extent of PCB contamination, reduces all demonstrated sources of PCBs ≥50 ppm to <50 ppm, or removes such sources from the natural gas pipeline system; or implements other engineering measures or methods to reduce PCB levels to <50 ppm and to prevent further introduction of PCBs ≥50 ppm into the natural gas pipeline system (e.g., pigging, decontamination, in-line filtration).

(*5*) Repeats sampling and analysis at least annually where PCBs are ≥50 ppm, until sampling results indicate the natural gas pipeline segment or component is <50 ppm PCB in two successive samples with a minimum interval between samples of 180 days.

(*6*) Marks aboveground sources of PCB liquids in natural gas pipeline systems with the M_L Mark in accordance with § 761.45(a), where such sources have been demonstrated through historical data or recent sampling to contain PCBs ≥50 ppm.

(B) Owners or operators of natural gas pipeline systems which do not include potential sources of PCB contamination as described in paragraph (i)(1)(iii)(A)(*3*) of this section containing ≥50 ppm PCB are not subject to paragraphs (i)(1)(iii)(A)(*2*), (i)(1)(iii)(A)(*3*), (i)(1)(iii)(A)(*4*), or (i)(1)(iii)(A)(*6*) of this section. Owners or operators of these systems, however, must comply with the other provisions of this section (e.g., sampling of any collected PCB liquids and recordkeeping).

(C) The owner or operator of a natural gas pipeline system must document in writing all data collected and actions taken, or not taken, pursuant to the authorization in paragraph (i)(1)(iii)(A) of this section. They must maintain the information for 3 years after the PCB concentration in the component or segment is reduced to <50 ppm, and make it available to EPA upon request.

(D) The Director, National Program Chemicals Division, after consulting with the appropriate EPA Region(s) may, based on a finding of no unreasonable risk, modify in writing the requirements of paragraph (i)(1)(iii)(A) of this section, including extending any compliance date, approving alternative formats for documentation, waiving one or more requirements for a segment or component, requiring sampling and analysis, and requiring implementation of engineering measures to reduce PCB concentrations. EPA will make such modifications based on the natural gas pipeline system size, configuration, and current operating conditions; nature, extent or source of contamination; proximity of contamination to end-users; or previous sampling, monitoring, remedial actions or documentation of activities taken regarding compliance with this authorization or other applicable Federal, State, or local laws and regulations. The Director, National Program Chemicals Division, may delegate the authority described in this paragraph, upon request, to the appropriate EPA Region.

(E) The owner or operator of a natural gas pipeline system may use historical data to fulfill the requirements of paragraphs (i)(1)(iii)(A)(*1*), (i)(1)(iii)(A)(*2*) and (i)(1)(iii)(A)(*3*) of this section. They may use documented historical actions taken to reduce PCB concentrations in known sources; decontaminate components or segments of natural gas pipeline systems; or otherwise to reduce PCB levels to fulfill the requirements of paragraph (i)(1)(iii)(A)(*4*) of this section.

(2) Any person may reuse PCB-Contaminated natural gas pipe and appurtenances in a natural gas pipeline

system, provided all free-flowing liquids have been removed.

(3) Any person may use PCB-Contaminated natural gas pipe, drained of all free-flowing liquids, in the transport of liquids (e.g., bulk hydrocarbons, chemicals, petroleum products, or coal slurry), as casing to provide secondary containment or protection (e.g., protection for electrical cable), as industrial structural material (e.g., fence posts, sign posts, or bridge supports), as temporary flume at construction sites, as equipment skids, as culverts under transportation systems in intermittent flow situations, for sewage service with written consent of the Publicly Owned Treatment Works (POTW), for steam service, as irrigation systems (<20 inch diameter) of less than 200 miles in length, and in a totally enclosed compressed air system.

(4) Any person characterizing PCB contamination in natural gas pipe or natural gas pipeline systems must do so by analyzing liquids collected at existing condensate collection points in the pipe or pipeline system. The level of PCB contamination found at a collection point is assumed to extend to the next collection point downstream. Any person characterizing multi-phasic liquids must do so in accordance with § 761.1(b)(4); if no liquids are present, they must use standard wipe samples in accordance with subpart M of this part.

(5)(i) Any person disposing of liquids containing PCBs ≥50 ppm removed, spilled, or otherwise released from a natural gas pipeline system must do so in accordance with § 761.60(a) based on the PCB concentration at the time of removal from the system. Any person disposing of materials contaminated by spills or other releases of PCBs ≥50 ppm from a natural gas pipeline systems, must do so in accordance with §§ 761.61 or 761.79, as applicable.

(ii) Any person who markets or burns for energy recovery liquids containing PCBs at concentrations <50 ppm PCBs at the time of removal from a natural gas pipeline system must do so in accordance with the provisions pertaining to used oil at § 761.20(e). No other use of liquid containing PCBs at concentrations above the quantifiable level/level of detection removed from a natural gas pipeline system is authorized.

(j) *Research and development.* For purposes of this section, authorized research and development (R&D) activities include, but are not limited to: the chemical analysis of PCBs, including analyses to determine PCB concentration; determinations of the physical properties of PCBs; studies of environmental transport processes; studies of biochemical transport processes; studies of effects of PCBs on the environment; and studies of the health effects of PCBs, including direct toxicity and toxicity of metabolic products of PCBs. Authorized R&D activities do not include research, development, or analysis for the development of any PCB product. Any person conducting R&D activities under this section is also responsible for determining and complying with all other applicable Federal, State, and local laws and regulations. Although the use of PCBs and PCBs in analytical reference samples derived from waste material is authorized in conjunction with PCB-disposal related activities, R&D for PCB disposal (as defined under § 761.3) is addressed in § 761.60(j). PCBs and PCBs in analytical reference samples derived from waste materials are authorized for use, in a manner other than a totally enclosed manner, provided that:

(1) They obtain the PCBs and PCBs in analytical reference samples derived from waste materials from sources authorized under § 761.80 to manufacture, process, and distribute PCBs in commerce and the PCBs are packaged in compliance with the Hazardous Materials Regulations at 49 CFR parts 171 through 180.

(2) They store all PCB wastes resulting from R&D activities (e.g., spent laboratory samples, residuals, contaminated media such as clothing, etc.) in compliance with § 761.65(b) and dispose of all PCB wastes in compliance with § 761.64.

(3) They use manifests, pursuant to subpart K of this part, for all R&D PCB wastes being transported from the R&D facility to a commercial storer and/or a disposal facility. However, no manifests are required if the residuals or unused analytical reference samples of PCB waste material are returned either to the physical location where the samples were collected or a location where other regulated PCBs from the physical location where the samples were collected are being stored for disposal.

(4) No person may manufacture, process, or distribute in commerce PCBs for research and development unless they have been granted an exemption to do so under TSCA section 6(e)(3)(B).

(k) *Use in scientific instruments.* PCBs may be used indefinitely in scientific instruments, for example, in oscillatory flow birefringence and viscoelasticity instruments for the study of the physical properties of polymers, as microscopy mounting fluids, as microscopy immersion oil, and as optical liquids in a manner other than a totally enclosed manner. No person may manufacture, process, or distribute in commerce PCBs for use in scientific instruments unless they have been granted an exemption to do so under TSCA section 6(e)(3)(B).

* * * * *

(n)—(o) [Reserved]

(p) *Continued use of porous surfaces contaminated with PCBs regulated for disposal by spills of liquid PCBs.* (1) Any person may use porous surfaces contaminated by spills of liquid PCBs at concentrations >10 μg/100 cm^2 for the remainder of the useful life of the surfaces and subsurface material if the following conditions are met:

(i) The source of PCB contamination is removed or contained to prevent further release to porous surfaces.

(ii) If the porous surface is accessible to superficial surface cleaning:

(A) The double wash rinse procedure in subpart S of this part is conducted on the surface to remove surface PCBs.

(B) The treated surface is allowed to dry for 24 hours.

(iii) After accessible surfaces have been cleaned according to paragraph (p)(1)(ii) of this section and for all surfaces inaccessible to cleanup:

(A) The surface is completely covered to prevent release of PCBs with:

(*1*) Two solvent resistant and water repellent coatings of contrasting colors to allow for a visual indication of wear through or loss of outer coating integrity; or

(*2*) A solid barrier fastened to the surface and covering the contaminated area or all accessible parts of the contaminated area. Examples of inaccessible areas are underneath a floor-mounted electrical transformer and in an impassible space between an electrical transformer and a vault wall.

(B) The surface is marked with the M_L Mark in a location easily visible to individuals present in the area; the M_L Mark shall be placed over the encapsulated area or the barrier to the encapsulated area.

(C) M_L Marks shall be replaced when worn or illegible.

(2) Removal of a porous surface contaminated with PCBs from its location or current use is prohibited except for removal for disposal in accordance with §§ 761.61 or 761.79 for surfaces contaminated by spills, or § 761.62 for manufactured porous surfaces.

(q) [Reserved]

(r) *Use in and servicing of rectifiers.* Any person may use PCBs at any concentration in rectifiers for the remainder of the PCBs' useful life, and may use PCBs <50 ppm in servicing (including rebuilding) rectifiers.

(s) *Use of PCBs in air compressor systems.* (1) Any person may use PCBs

in air compressor systems at concentrations <50 ppm.

(2) Any person may use PCBs in air compressor systems (or components thereof) at concentrations ≥50 ppm provided that:

(i) All free-flowing liquids containing PCBs ≥50 ppm are removed from the air compressor crankcase and the crankcase is refilled with non-PCB liquid.

(ii) Other air compressor system components contaminated with PCBs ≥50 ppm, are decontaminated in accordance with § 761.79 or disposed of in accordance with subpart D of this part.

(iii) Air compressor piping with a nominal inside diameter of <2 inches is decontaminated by continuous flushing for 4 hours, at no <300 gallons per hour (§ 761.79 contains solvent requirements).

(3) The requirements in paragraph (s)(2) of this section must be completed by August 30, 1999 or within 1 year of the date of discovery of PCBs at ≥50 ppm in the air compressor system, whichever is later. The EPA Regional Administrator for the EPA Region in which an air compressor system is located may, at his/her discretion and in writing, extend this timeframe.

(t) *Use of PCBs in other gas or liquid transmission systems.* (1) PCBs are authorized for use in intact and non-leaking gas or liquid transmission systems at concentrations <50 ppm PCBs.

(2) PCBs are authorized for use at concentrations ≥50 ppm in intact and non-leaking gas or liquid transmission systems not owned or operated by a seller or distributor of the gas or liquid transmitted in the system.

(3) Any person may use PCBs at concentrations ≥50 ppm in intact and non-leaking gas or liquid transmission systems, with the written approval of the Director, National Program Chemicals Division, subject to the requirements applicable to natural gas pipeline systems at paragraphs (i)(1)(iii)(A), (i)(1)(iii)(C) through (i)(1)(iii)(E), and (i)(2) through (i)(5) of this section.

(u) *Use of decontaminated materials.* (1) Any person may use equipment, structures, other non-liquid or liquid materials that were contaminated with PCBs during manufacture, use, servicing, or because of spills from, or proximity to, PCBs ≥50 ppm, including those not otherwise authorized for use under this part, provided:

(i) The materials were decontaminated in accordance with:

(A) A TSCA PCB disposal approval issued under subpart D of this part;

(B) Section 761.79; or

(C) Applicable EPA PCB spill cleanup policies (e.g., TSCA, RCRA, CERCLA, EPA regional) in effect at the time of the decontamination; or

(ii) If not previously decontaminated, the materials now meet an applicable decontamination standard in § 761.79(b).

(2) No person shall use or reuse materials decontaminated in accordance with paragraph (u)(1)(i) of this section or meeting an applicable decontamination standard in paragraph (u)(1)(ii) of this section, in direct contact with food, feed, or drinking water unless otherwise allowed under this section or this part.

(3) Any person may use water containing PCBs at concentrations ≤0.5μg/L PCBs without restriction.

(4) Any person may use water containing PCBs at concentrations <200 μg/L (i.e., < 200 ppb PCBs) for non-contact use in a closed system where there are no releases (e.g., as a non-contact cooling water).

i. By adding § 761.35 to read as follows:

§ 761.35 Storage for reuse.

(a) The owner or operator of a PCB Article may store it for reuse in an area which is not designed, constructed, and operated in compliance with § 761.65(b), for no more than 5 years after the date the Article was originally removed from use (e.g., disconnected electrical equipment) or 5 years after August 28, 1998, whichever is later, if the owner or operator complies with the following conditions:

(1) Follows all use requirements at § 761.30 and marking requirements at subpart C of this part that are applicable to the PCB Article.

(2) Maintains records starting at the time the PCB Article is removed from use or August 28, 1998. The records must indicate:

(i) The date the PCB Article was removed from use or August 28, 1998, if the removal date is not known.

(ii) The projected location and the future use of the PCB Article.

(iii) If applicable, the date the PCB Article is scheduled for repair or servicing.

(b) The owner or operator of a PCB Article may store it for reuse in an area that does not comply with § 761.65(b) for a period longer than 5 years, provided that the owner or operator has received written approval from the EPA Regional Administrator for the Region in which the PCB Article is stored. An owner or operator of a PCB Article seeking approval to extend the 5–year period must submit a request for extension to the EPA Regional Administrator at least 6 months before the 5-year storage for reuse period expires and must include an item-by-item justification for the desired extension. The EPA Regional Administrator may include any conditions to such approval deemed necessary to protect health or the environment. The owner or operator of the PCB Article being stored for reuse must comply with the other applicable provisions of this part, including the record retention requirements at § 761.180(a).

(c) Any person may store a PCB Article for reuse indefinitely in:

(1) A unit in compliance with § 761.65(b).

(2) A unit permitted under section 3004 of RCRA to manage hazardous wastes in containers.

(3) A unit permitted by a State authorized under section 3006 of RCRA to manage hazardous waste.

j. In § 761.40, by revising paragraphs (a)(5), (b), (e), and (h), and adding paragraphs (k) and (l) to read as follows:

§ 761.40 Marking requirements.

(a) * * *

(5) PCB Large Low Voltage Capacitors at the time of removal from use (see also paragraph (k) of this section).

* * * * *

(b) As of October 1, 1979, each transport vehicle loaded with PCB Containers that contain more than 45 kg (99.4 lbs.) of liquid PCBs at concentrations of ≥50 ppm or with one or more PCB Transformers shall be marked on each end and each side with the M_L mark as described in § 761.45(a).

* * * * *

(e) As of October 1, 1979, applicable PCB Items in paragraphs (a)(1), (a)(6), (a)(7), and (a)(8) of this section containing PCBs in concentrations of 50 to 500 ppm shall be marked with the M_L mark as described in § 761.45(a).

* * * * *

(h) All marks required by this subpart must be placed in a position on the exterior of the PCB Items, storage units, or transport vehicles so that the marks can be easily read by any persons inspecting or servicing the marked PCB Items, storage units, or transport vehicles.

* * * * *

(k) As of April 26, 1999 the following PCB Items shall be marked with the M_L mark as described in § 761.45(a):

(1) All PCB Large Low Voltage Capacitors not marked under paragraph (a) of this section shall be marked individually, or if one or more PCB Large Low Voltage Capacitors are installed in a protected location such as on a power pole, or structure, or behind

a fence, then the owner or operator shall mark the pole, structure, or fence with the M_L mark, and maintain a record or procedure identifying the PCB Capacitors at the protected location. PCB Large Low Voltage Capacitors in inaccessible locations inside equipment need not be marked individually, provided the owner or operator marks the equipment in accordance with paragraph (k)(2) of this section, and marks the individual capacitors at the time of removal from use in accordance with paragraph (a) of this section.

(2) All equipment not marked under paragraph (a) of this section containing a PCB Transformer or a PCB Large High or Low Voltage Capacitor.

(l)(1) All voltage regulators with a PCB concentration of ≥500 ppm must be marked individually with the M_L mark as described in § 761.45(a).

(2) Locations of voltage regulators containing PCBs ≥500 ppm PCBs shall be marked as follows: the vault door, machinery room door, fence, hallway, or means of access, other than grates or manhole covers, must be marked with the M_L mark as described in § 761.45(a).

k. By amending subpart D by removing the ''Note'' appearing just after the heading for subpart D and adding § 761.50, reading as follows:

§ 761.50 Applicability.

(a) *General PCB disposal requirements.* Any person storing or disposing of PCB waste must do so in accordance with subpart D of this part. The following prohibitions and conditions apply to all PCB waste storage and disposal:

(1) No person may open burn PCBs. Combustion of PCBs approved under § 761.60(a) or (e), or otherwise allowed under part 761, is not open burning.

(2) No person may process liquid PCBs into non-liquid forms to circumvent the high temperature incineration requirements of § 761.60(a).

(3) No person may discharge water containing PCBs to a treatment works (as defined § 503.9(aa) of this chapter) or to navigable waters unless the PCB concentration is <3 μg/L (approximately 3 ppb), or unless the discharge is in accordance with a PCB discharge limit included in a permit issued under section 307(b) or 402 of the Clean Water Act.

(4) Spills and other uncontrolled discharges of PCBs at concentrations of ≥50 ppm constitute the disposal of PCBs.

(5) Any person land disposing of non-liquid PCBs may avoid otherwise-applicable sampling requirements by presuming that the PCBs disposed of are ≥500 ppm (or ≥100 μg/100 cm^2 if no free-flowing liquids are present).

(6) Any person storing or disposing of PCBs is also responsible for determining and complying with all other applicable Federal, State, and local laws and regulations.

(b) *PCB waste.* (1) *PCB liquids.* Any person removing PCB liquids from use (i.e., not PCB remediation waste) must dispose of them in accordance with § 761.60(a), or decontaminate them in accordance with § 761.79.

(2) *PCB Items.* Any person removing from use a PCB Item containing an intact and non-leaking PCB Article must dispose of it in accordance with § 761.60(b), or decontaminate it in accordance with § 761.79. PCB Items where the PCB Articles are no longer intact and non-leaking are regulated for disposal as PCB bulk product waste under § 761.62(a) or (c).

(i) Fluorescent light ballasts containing PCBs only in an intact and non-leaking PCB Small Capacitor are regulated for disposal under § 761.60(b)(2)(ii).

(ii) Fluorescent light ballasts containing PCBs in the potting material are regulated for disposal as PCB bulk product waste under § 761.62.

(3) *PCB remediation waste.* PCB remediation waste, including PCB sewage sludge, is regulated for cleanup and disposal in accordance with § 761.61.

(i) Any person responsible for PCB waste at concentrations ≥50 ppm placed in a land disposal facility, spilled, or otherwise released into the environment prior to April 18, 1978, must dispose of the waste as follows:

(A) Sites containing these wastes are presumed not to present an unreasonable risk of injury to health or the environment from exposure to PCBs at the site. However, the EPA Regional Administrator may inform the owner or operator of the site that there is reason to believe that spills, leaks, or other uncontrolled releases or discharges, such as leaching, from the site constitute ongoing disposal that may present an unreasonable risk of injury to health or the environment from exposure to PCBs at the site, and may require the owner or operator to generate data necessary to characterize the risk. If after reviewing any such data, the EPA Regional Administrator makes a finding, that an unreasonable risk exists, then he or she may direct the owner or operator of the site to dispose of the PCB remediation waste in accordance with § 761.61 such that an unreasonable risk of injury no longer exists.

(B) Unless directed by the EPA Regional Administrator to dispose of PCB remediation waste in accordance with paragraph (b)(3)(i)(A) of this section, any person responsible for PCB remediation waste placed in a land disposal facility, spilled, or otherwise released into the environment prior to April 18, 1978, who unilaterally decides to dispose of that waste (for example, to obtain insurance or to sell the property), is not required to cleanup in accordance with § 761.61. Disposal of the PCB remediation waste must comply with § 761.61. However, cleanup of those wastes that is not in complete compliance with § 761.61 will not afford the responsible party with relief from the applicable PCB regulations for that waste.

(ii) Any person responsible for PCB waste placed in a land disposal facility, spilled, or otherwise released into the environment on or after April 18, 1978, must dispose of it as follows:

(A) In accordance with the PCB Spill Cleanup Policy (Policy) at subpart G of this part, for those PCB remediation wastes that meet the criteria of the Policy. Consult the Policy for a description of the spills it covers and its notification and timing requirements.

(B) In accordance with § 761.61. Complete compliance with § 761.61 does not create a presumption against enforcement action for penalties for any unauthorized PCB disposal.

(iii) The owner or operator of a site containing PCB remediation waste has the burden of proving the date that the waste was placed in a land disposal facility, spilled, or otherwise released into the environment, and the concentration of the original spill.

(4) *PCB bulk product waste*—(i) *General.* Any person disposing of PCB bulk product waste must do so in accordance with § 761.62. PCB bulk product waste, as that term is defined in § 761.3, is waste that was ≥50 ppm when originally removed from service, even if its current PCB concentration is <50 ppm. PCB bulk product waste is regulated for disposal based on the risk from the waste once disposed of. For waste which is land disposed, the waste is regulated based on how readily the waste is released from disposal to the environment, in particular by leaching out from the land disposal unit.

(ii) *Metal surfaces in contact with PCBs.* Any person disposing of metal surfaces in contact with PCBs (e.g., painted metal) may use thermal decontamination procedures in accordance with § 761.79(c)(6) (see § 761.62(a)(6)).

(5) *PCB household waste.* Any person storing or disposing of PCB household

waste, as that term is defined in § 761.3, must do so in accordance with § 761.63.

(6) *PCB research and development waste.* Any person disposing of PCB wastes generated during and as a result of research and development for use under § 761.30(j), or for disposal under § 761.60(j), must do so in accordance with § 761.64.

(7) *PCB/Radioactive waste.* (i) Any person storing PCB/radioactive waste ≥50 ppm PCBs must do so taking into account both its PCB concentration and its radioactive properties, except as provided in § 761.65(a)(1), (b)(1)(ii), and (c)(6)(i).

(ii) Any person disposing of PCB/radioactive waste must do so taking into account both its PCB concentration and its radioactive properties. If, taking into account only the properties of the PCBs in the waste (and not the radioactive properties of the waste), the waste meets the requirements for disposal in a facility permitted, licensed, or registered by a State as a municipal or non-municipal non-hazardous waste landfill (e.g., PCB bulk product waste under § 761.62(b)(1)), then the person may dispose of the PCB/radioactive waste, without regard to the PCB component of the waste, on the basis of its radioactive properties in accordance with all applicable requirements for the radioactive component of the waste.

(8) *Porous surfaces.* In most cases a person must dispose of porous surfaces as materials where PCBs have penetrated far beneath the surface, rather than a simple surface contamination. Any person disposing of porous surfaces on which PCBs have been spilled and meeting the definition of PCB remediation waste at § 761.3 must do so in accordance with § 761.61(a)(5)(iii). Any person disposing of porous surfaces which are part of manufactured non-liquid products containing PCBs and meeting the definition of PCB bulk product waste at § 761.3 must do so in accordance with § 761.62. Any person may decontaminate concrete surfaces upon which PCBs have been spilled in accordance with § 761.79(b)(4), if the decontamination procedure is commenced within 72 hours of the initial spill of PCBs to the concrete or portion thereof being decontaminated. Any person may decontaminate porous non-liquid PCBs in contact with non-porous surfaces, such as underground metal fuel tanks coated with fire retardant resin or pitch, for purposes of unrestricted use or disposal in a smelter in accordance with § 761.79(b)(3).

(c) *Storage for disposal.* Any person who holds PCB waste must store it in accordance with § 761.65.

(d) *Performance specifications for disposal technologies*—(1) *Incinerators.* Any person using an incinerator to dispose of PCBs must use an incinerator that meets the criteria set forth in § 761.70.

(2) *High efficiency boilers.* Any person using a high efficiency boiler to dispose of PCBs must use a boiler that meets the criteria set forth in § 761.71.

(3) *Scrap metal recovery ovens and smelters.* Any person using scrap metal recovery ovens and smelters to dispose of PCBs must use a device that meets the criteria set forth in § 761.72.

(4) *Chemical waste landfills.* Any person using a chemical waste landfill to dispose of PCBs must use a chemical waste landfill that meets the criteria set forth in § 761.75.

(e) *TSCA PCB Coordinated Approval.* Any person seeking a TSCA PCB Coordinated Approval must follow the procedures set forth in § 761.77.

l. In § 761.60 by revising paragraphs (a)(1) through (a)(3), by removing paragraphs (a)(4), (a)(5), and (a)(6); in paragraph (b) by adding introductory text just after the italic heading ''PCB Articles,'' and by revising paragraphs (b)(1)(i)(B), (b)(2)(iv) introductory text, (b)(2)(vi), revising paragraphs (b)(3) and (b)(4); by redesignating paragraphs (b)(5) and (b)(6) as (b)(6) and (b)(7), respectively; by adding new paragraphs (b)(5), (b)(6)(iii), and (b)(6)(iv), and by revising newly designated (b)(6)(ii); in paragraph (c)(3) by removing the term ''facility'' and adding, in its place, the term ''unit''; removing and reserving paragraphs (d) and (f)(2); revising paragraph (e); adding paragraphs (g)(1)(iii) and (g)(2)(iii); by revising paragraph (i)(2), and adding paragraph (j) to read as follows:

§ 761.60 Disposal requirements.

(a) *PCB liquids.* PCB liquids at concentrations ≥50 ppm must be disposed of in an incinerator which complies with § 761.70, except that PCB liquids at concentrations ≥50 ppm and <500 ppm may be disposed of as follows:

(1) For mineral oil dielectric fluid, in a high efficiency boiler according to § 761.71(a).

(2) For liquids other than mineral oil dielectric fluid, in a high efficiency boiler according to § 761.71(b).

(3) For liquids from incidental sources, such as precipitation, condensation, leachate or load separation and are associated with PCB Articles or non-liquid PCB wastes, in a chemical waste landfill which complies with § 761.75 if:

(i) Disposal does not violate § 268.32(a)(2) or § 268.42(a)(1) of this chapter.

(ii) Information is provided to or obtained by the owner or operator of the chemical waste landfill that shows that the liquids do not exceed 500 ppm PCB and are not an ignitable waste as described in § 761.75(b)(8)(iii).

(b) *PCB Articles.* This paragraph does not authorize disposal that is otherwise prohibited in § 761.20 or elsewhere in this part.

(1) * * *

(i) * * *

(B) In a chemical waste landfill approved under § 761.75; provided that all free-flowing liquid is removed from the transformer, the transformer is filled with a solvent, the transformer is allowed to stand for at least 18 continuous hours, and then the solvent is thoroughly removed. Any person disposing of PCB liquids, including both the dielectric fluid and all solvents used as a flush, that are removed from the transformer, shall do so in accordance with paragraph (a)(1) of this section or decontaminate them in accordance with § 761.79. Solvents may include kerosene, xylene, toluene, and other solvents in which PCBs are readily soluble. Any person disposing of these PCB liquids must ensure that the solvent flushing procedure is conducted in accordance with applicable safety and health standards as required by Federal or State regulations.

* * * * *

(2) * * *

(iv) Any person who manufactures or at any time manufactured PCB Capacitors or PCB Equipment, and acquired the PCB Capacitor in the course of such manufacturing, shall place the PCB Small Capacitors in a container meeting the DOT packaging requirements at 49 CFR parts 171 through 180 and dispose of them in accordance with either of the following:

* * * * *

(vi) Any person disposing of large PCB capacitors or small PCB capacitors described in paragraph (b)(2)(iv) of this section in a chemical waste landfill approved under § 761.75, shall first place them in a container meeting the DOT packaging requirements at 49 CFR parts 171 through 180. In all cases, the person must fill the interstitial space in the container with sufficient absorbent material (such as soil) to absorb any liquid PCBs remaining in the capacitors.

(3) *PCB hydraulic machines.* (i) Any person disposing of PCB hydraulic machines containing PCBs at concentrations of ≥50 ppm, such as die casting machines, shall do so by one of the following methods:

(A) In accordance with § 761.79.

(B) In a facility which is permitted, licensed, or registered by a State to manage municipal solid waste subject to part 258 of this chapter or non-municipal non-hazardous waste subject to §§ 257.5 through 257.30 of this chapter, as applicable (excluding thermal treatment units).

(C) In an industrial furnace operating in compliance with § 761.72.

(D) In a disposal facility approved under this part.

(ii) All free-flowing liquid must be removed from each machine and the liquid must be disposed of in accordance with the provisions of paragraph (a) of this section. If the PCB liquid contains ≥1,000 ppm PCB, then the hydraulic machine must be decontaminated in accordance with § 761.79 or flushed prior to disposal with a solvent listed at paragraph (b)(1)(i)(B) of this section which contains <50 ppm PCB. The solvent must be disposed of in accordance with paragraph (a) of this section or § 761.79.

(4) *PCB-Contaminated Electrical Equipment.* Any person disposing of any PCB-Contaminated Electrical Equipment, except capacitors, shall do so by removing all free-flowing liquid from the electrical equipment and disposing of the removed liquid in accordance with paragraph (a) of this section. The drained PCB-Contaminated Electrical Equipment, including any residual liquids, shall be disposed of by one of the following methods:

(i)(A) In a facility which is permitted, licensed, or registered by a State to manage municipal solid waste subject to part 258 of this chapter or non-municipal non-hazardous waste subject to §§ 257.5 through 257.30 of this chapter, as applicable (excluding thermal treatment units).

(B) In an industrial furnace operating in compliance with § 761.72.

(C) In a disposal facility or process approved under this part.

(ii) Any person disposing of Large Capacitors that contain ≥50 ppm but <500 ppm PCBs shall do so in a disposal facility approved under this part.

(iii) The storage for disposal of PCB-Contaminated Electrical Equipment containing no free-flowing liquid is not regulated under subpart D of this part.

(5) *Natural gas pipeline systems containing PCBs.* The owner or operator of natural gas pipeline systems containing ≥50 ppm PCBs, when no longer in use, shall dispose of the system either by abandonment in place of the pipe under paragraph (b)(5)(i) of this section or removal with subsequent action under paragraph (b)(5)(ii) of this section. Any person determining the PCB concentrations in natural gas pipeline systems shall do so in accordance with paragraph (b)(5)(iii) of this section.

(i) *Abandonment.* Natural gas pipe containing ≥50 ppm PCBs may be abandoned in place under one or more of the following provisions:

(A) Natural gas pipe having a nominal inside diameter of ≤4 inches, and containing PCBs at any concentration but no free-flowing liquids, may be abandoned in the place it was used to transport natural gas if each end is sealed closed and the pipe is either:

(*1*) Included in a public service notification program, such as a ''one-call'' system under 49 CFR 192.614(a) and (b).

(*2*) Filled to 50 percent or more of the volume of the pipe with grout (such as a hardening slurry consisting of cement, bentonite, or clay) or high density polyurethane foam.

(B) PCB-Contaminated natural gas pipe of any diameter, where the PCB concentration was determined in accordance with subpart M of this part after the last transmission of gas through the pipe or at the time of abandonment, that contains no free-flowing liquids may be abandoned in the place it was used to transport natural gas if each end is sealed closed.

(C) Natural gas pipe of any diameter which contains PCBs at any concentration but no free-flowing liquids, may be abandoned in the place it was used to transport natural gas, if each end is sealed closed, and either:

(*1*) The interior surface is decontaminated with one or more washes of a solvent in accordance with the use and disposal requirements of § 761.79(d). This decontamination process must result in a recovery of 95 percent of the solvent volume introduced into the system, and the PCB concentration of the recovered wash must be <50 ppm (see § 761.79(a)(1) for requirements on use and disposal of decontaminating fluids).

(*2*) The pipe is filled to 50 percent of the volume of the pipe with grout (such as a hardening slurry-like cement, bentonite, or clay) or high density polyurethane foam (except that only cement shall be used as grout under rivers or streams) and each end is sealed closed.

(D) Natural gas pipe of any diameter which contains PCBs at any concentration may be abandoned in place after decontamination in accordance with § 761.79(c)(3), (c)(4) or (h) or a PCB disposal approval issued under § 761.60(e) or § 761.62(c).

(ii) *Removal with subsequent action.* Natural gas pipeline systems may be disposed of under one of the following provisions:

(A) The following classifications of natural gas pipe containing no free-flowing liquids may be disposed of in a facility permitted, licensed, or registered by a State to manage municipal solid waste subject to part 258 of this chapter or non-municipal non-hazardous waste subject to §§ 257.5 through 257.30 of this chapter, as applicable (excluding thermal treatment units); scrap metal recovery oven and smelter operating in compliance with the requirements of § 761.72; or a disposal facility approved under this part:

(*1*) PCB-Contaminated natural gas pipe of any diameter where the PCB concentration was determined in accordance with subpart M of this part after the last transmission of gas through the pipe or during removal from the location it was used to transport natural gas.

(*2*) Natural gas pipe containing PCBs at any concentration and having a nominal inside diameter ≤4 inches.

(B) Any component of a natural gas pipeline system may be disposed of under one of the following provisions:

(*1*) In an incinerator operating in compliance with § 761.70.

(*2*) In a chemical waste landfill operating in compliance with § 761.75, provided that all free-flowing liquid PCBs have been thoroughly drained.

(*3*) As a PCB remediation waste in compliance with § 761.61.

(*4*) In accordance with § 761.79.

(iii) *Characterization of natural gas pipeline systems by PCB concentration in condensate.* (A) Any person disposing of a natural gas pipeline system under paragraphs (b)(5)(i)(B) or (b)(5)(ii)(A)(*1*) of this section must characterize it for PCB contamination by analyzing organic liquids collected at existing condensate collection points in the natural gas pipeline system. The level of PCB contamination found at a collection point is assumed to extend to the next collection point downstream. If no organic liquids are present, drain free-flowing liquids and collect standard wipe samples according to subpart M of this part. Collect condensate within 72 hours of the final transmission of natural gas through the part of the system to be abandoned and wipe samples after the last transmission of gas through the pipe or during removal from the location it was used to transport natural gas.

(B) PCB concentration of the organic phase of multi-phasic liquids shall be determined in accordance with § 761.1(b)(4).

(iv) *Disposal of pipeline liquids.* (A) Any person disposing of liquids

containing PCBs ≥50 ppm removed, spilled, or otherwise released from a natural gas pipeline system must do so in accordance with § 761.61(a)(5)(iv) based on the PCB concentration at the time of removal from the system. Any person disposing of material contaminated by spills or other releases of PCBs ≥50 ppm from a natural gas pipeline system, must do so in accordance with § 761.61 or § 761.79, as applicable.

(B) Any person who markets or burns for energy recovery liquid containing PCBs at concentrations <50 ppm PCBs at the time of removal from a natural gas pipeline system must do so in accordance with the provisions pertaining to used oil at § 761.20(e). No other use of liquid containing PCBs at concentrations above the quantifiable level/level of detection removed from a natural gas pipeline system is authorized.

(6) * * *

(ii) Any person disposing of PCB-Contaminated Articles must do so by removing all free-flowing liquid from the article, disposing of the liquid in accordance with paragraph (a)(2) or (a)(3) of this section and disposing of the PCB-Contaminated Articles with no free-flowing liquid by one of the following methods:

(A) In accordance with § 761.79.

(B) In a facility permitted, licensed, or registered by a State to manage municipal solid waste subject to part 258 of this chapter or non-municipal non-hazardous waste subject to §§ 257.5 through 257.30 of this chapter, as applicable (excluding thermal treatment units).

(C) In an industrial furnace operating in compliance with § 761.72.

(D) In a disposal facility approved under this part.

(iii) Fluorescent light ballasts containing PCBs in their potting material must be disposed of in a TSCA-approved disposal facility, as bulk product waste under § 761.62, as household waste under § 761.63 (where applicable), or in accordance with the decontamination provisions of § 761.79.

(iv) Any person with access to, or in direct contact with, PCB-Contaminated surfaces must be protected from dermal exposure to those surfaces.

* * * * *

(d) [Reserved]

(e) Any person who is required to incinerate any PCBs and PCB Items under this subpart and who can demonstrate that an alternative method of destroying PCBs and PCB Items exists and that this alternative method can achieve a level of performance equivalent to an incinerator approved under § 761.70 or a high efficiency boiler operating in compliance with § 761.71, must submit a written request to either the EPA Regional Administrator or the Director, National Program Chemicals Division, for a waiver from the incineration requirements of § 761.70 or § 761.71. Requests for approval of alternate methods that will be operated in more than one Region must be submitted to the Director, National Program Chemicals Division except for research and development activities involving less than 500 pounds of PCB material (see paragraph (i)(2) of this section). Requests for approval of alternate methods that will be operated in only one Region must be submitted to the appropriate EPA Regional Administrator. The applicant must show that his or her method of destroying PCBs will not present an unreasonable risk of injury to health or the environment. On the basis of such information and any available information, the EPA Regional Administrator or the Director, National Program Chemicals Division may, in his or her discretion, approve the use of the alternate method if he or she finds that the alternate disposal method provides PCB destruction equivalent to disposal in a § 761.70 incinerator or a § 761.71 high efficiency boiler and will not present an unreasonable risk of injury to health or the environment. Any approval must be stated in writing and may include such conditions and provisions as the EPA Regional Administrator or Director, National Program Chemicals Division deems appropriate. The person to whom such waiver is issued must comply with all limitations contained in such determination. No person may use the alternate method of destroying PCBs or PCB Items prior to obtaining permission from the appropriate EPA official.

(f)(1) * * *

(2) [Reserved]

(g) * * *

(1) * * *

(iii) Unless otherwise specified in this part, any person conducting the chemical analysis of PCBs shall do so using gas chromatography. Any gas chromatographic method that is appropriate for the material being analyzed may be used, including EPA Method 608, ''Organochlorine Pesticides and PCBs'' at 40 CFR part 136, Appendix A;'' EPA Method 8082, ''Polychlorinated Biphenyls (PCBs) by Capillary Column Gas Chromatography'' of SW-846, ''OSW Test Methods for Evaluating Solid Waste,'' which is available from NTIS; and ASTM Standard D-4059, ''Standard Test Method for Analysis of Polychlorinated Biphenyls in Insulating Liquids by Gas Chromatography,'' which is available from ASTM.

(2) * * *

(iii) Unless otherwise specified in this part, any person conducting the chemical analysis of PCBs shall do so using gas chromatography. Any gas chromatographic method that is appropriate for the material being analyzed may be used, including those indicated in paragraph (g)(1)(iii) of this section.

* * * * *

(i) * * *

(2) Except for activity authorized under paragraph (j) of this section, research and development (R&D) for PCB disposal using a total of <500 pounds of PCB material (regardless of PCB concentration) will be reviewed and approved by the EPA Regional Administrator for the Region where the R&D will be conducted, and R&D for PCB disposal using 500 pounds or more of PCB material (regardless of PCB concentration) will be reviewed and approved by the Director, National Program Chemicals Division.

* * * * *

(j) *Self-implementing requirements for research and development (R&D) for PCB disposal.*

(1) Any person may conduct R&D for PCB disposal without prior written approval from EPA if they meet the following conditions:

(i) File a notification and obtain an EPA identification number pursuant to subpart K of this part.

(ii) Notify in writing the EPA Regional Administrator, the State environmental protection agency, and local environmental protection agency, having jurisdiction where the R&D for PCB disposal activity will occur at least 30 days prior to the commencement of any R&D for PCB disposal activity conducted under this section. Each written notification shall include the EPA identification number of the site where the R&D for PCB disposal activities will be conducted, the quantity of PCBs to be treated, the type of R&D technology to be used, the general physical and chemical properties of material being treated, and an estimate of the duration of the PCB activity. The EPA Regional Administrator, the State environmental protection agency, and the local environmental protection agency may waive notification in writing prior to commencement of the research.

(iii) The amount of material containing PCBs treated annually by the facility during R&D for PCB disposal activities does not exceed 500 gallons or

70 cubic feet of liquid or non-liquid PCBs and does not exceed a maximum concentration of 10,000 ppm PCBs.

(iv) No more than 1 kilogram total of pure PCBs per year is disposed of in all R&D for PCB disposal activities at a facility.

(v) Each R&D for PCB disposal activity under this section lasts no more than 1 calendar year.

(vi) Store all PCB wastes (treated and untreated PCB materials, testing samples, spent laboratory samples, residuals, untreated samples, contaminated media or instrumentation, clothing, etc.) in compliance with § 761.65(b) and dispose of them according to the undiluted PCB concentration prior to treatment. However, PCB materials not treated in the R&D for PCB disposal activity may be returned either to the physical location where the samples were collected or a location where other regulated PCBs from the physical location where the samples were collected are being stored for disposal.

(vii) Use manifests pursuant to subpart K of this part for all R&D PCB wastes being transported from the R&D facility to an approved PCB storage or disposal facility. However, §§ 761.207 through 761.218 do not apply if the residuals or treated samples are returned either to the physical location where the samples were collected or a location where other regulated PCBs from the physical location where the samples were collected are being stored for disposal.

(viii) Package and ship all PCB wastes pursuant to DOT requirements under 49 CFR parts 171 through 180.

(ix) Comply with the recordkeeping requirements of § 761.180.

(2) Do not exceed material limitations set out in paragraphs (j)(1)(iii) and (iv) of this section and the time limitation set out in paragraph (j)(1)(v) of this section without prior written approval from EPA. Requests for approval to exceed the material limitations for PCBs in R&D for PCB disposal activities as specified in this section must be submitted in writing to the EPA Regional Administrator for the Region in which the facility conducting R&D for PCB disposal activities is located. Each request shall specify the quantity or concentration requested or additional time needed for disposal and include a justification for each increase. For extensions to the duration of the R&D for PCB disposal activity, the request shall also include a report on the accomplishments and progress of the previously authorized R&D for PCB disposal activity for which the extension is sought. The EPA Regional Administrator may grant a waiver in writing for an increase in the volume of PCB material, the maximum concentration of PCBs, the total amount of pure PCBs, or the duration of the R&D activity. Approvals will state all requirements applicable to the R&D for PCB disposal activity.

(3) The EPA Regional Administrator for the Region in which an R&D for PCB disposal activity is conducted may determine, at any time, that an R&D PCB disposal approval is required under paragraphs (e) and (i)(2) of this section or § 761.70(d) to ensure that any R&D for PCB disposal activity does not present an unreasonable risk of injury to health or the environment.

m. By adding §§ 761.61, 761.62, 761.63, and 761.64 to subpart D to read as follows:

§ 761.61 PCB remediation waste.

This section provides cleanup and disposal options for PCB remediation waste. Any person cleaning up and disposing of PCBs managed under this section shall do so based on the concentration at which the PCBs are found. This section does not prohibit any person from implementing temporary emergency measures to prevent, treat, or contain further releases or mitigate migration to the environment of PCBs or PCB remediation waste.

(a) *Self-implementing on-site cleanup and disposal of PCB remediation waste.* EPA designed the self-implementing procedure for a general, moderately-sized site where there should be low residual environmental impact from remedial activities. The procedure may be less practical for larger or environmentally diverse sites. For these other sites, the self-implementing procedure still applies, but an EPA Regional Administrator may authorize more practical procedures through paragraph (c) of this section. Any person may conduct self-implementing cleanup and disposal of PCB remediation waste in accordance with the following requirements without prior written approval from EPA.

(1) *Applicability.* (i) The self-implementing procedures may not be used to clean up:

(A) Surface or ground waters.

(B) Sediments in marine and freshwater ecosystems.

(C) Sewers or sewage treatment systems.

(D) Any private or public drinking water sources or distribution systems.

(E) Grazing lands.

(F) Vegetable gardens.

(ii) The self-implementing cleanup provisions shall not be binding upon cleanups conducted under other authorities, including but not limited to, actions conducted under section 104 or section 106 of CERCLA, or section 3004(u) and (v) or section 3008(h) of RCRA.

(2) *Site characterization.* Any person conducting self-implementing cleanup of PCB remediation waste must characterize the site adequately to be able to provide the information required by paragraph (a)(3) of this section. Subpart N of this part provides a method for collecting new site characterization data or for assessing the sufficiency of existing site characterization data.

(3) *Notification and certification.* (i) At least 30 days prior to the date that the cleanup of a site begins, the person in charge of the cleanup or the owner of the property where the PCB remediation waste is located shall notify, in writing, the EPA Regional Administrator, the Director of the State or Tribal environmental protection agency, and the Director of the county or local environmental protection agency where the cleanup will be conducted. The notice shall include:

(A) The nature of the contamination, including kinds of materials contaminated.

(B) A summary of the procedures used to sample contaminated and adjacent areas and a table or cleanup site map showing PCB concentrations measured in all pre-cleanup characterization samples. The summary must include sample collection and analysis dates. The EPA Regional Administrator may require more detailed information including, but not limited to, additional characterization sampling or all sample identification numbers from all previous characterization activities at the cleanup site.

(C) The location and extent of the identified contaminated area, including topographic maps with sample collection sites cross referenced to the sample identification numbers in the data summary from paragraph (a)(3)(i)(B) of this section.

(D) A cleanup plan for the site, including schedule, disposal technology, and approach. This plan should contain options and contingencies to be used if unanticipated higher concentrations or wider distributions of PCB remediation waste are found or other obstacles force changes in the cleanup approach.

(E) A written certification, signed by the owner of the property where the cleanup site is located and the party conducting the cleanup, that all sampling plans, sample collection procedures, sample preparation

procedures, extraction procedures, and instrumental/chemical analysis procedures used to assess or characterize the PCB contamination at the cleanup site, are on file at the location designated in the certificate, and are available for EPA inspection. Persons using alternate methods for chemical extraction and chemical analysis for site characterization must include in the certificate a statement that such a method will be used and that a comparison study which meets or exceeds the requirements of subpart Q of this part, and for which records are on file, has been completed prior to verification sampling.

(ii) Within 30 calendar days of receiving the notification, the EPA Regional Administrator will respond in writing approving of the self-implementing cleanup, disapproving of the self-implementing cleanup, or requiring additional information. If the EPA Regional Administrator does not respond within 30 calendar days of receiving the notice, the person submitting the notification may assume that it is complete and proceed with the cleanup according to the information the person provided to the EPA Regional Administrator. Once cleanup is underway, the person conducting the cleanup must provide any proposed changes from the notification to the EPA Regional Administrator in writing no less than 14 calendar days prior to the proposed implementation of the change. The EPA Regional Administrator will determine in his or her discretion whether to accept the change, and will respond to the change notification verbally within 7 calendar days and in writing within 14 calendar days of receiving it. If the EPA Regional Administrator does not respond verbally within 7 calendar days and in writing within 14 calendar days of receiving the change notice, the person who submitted it may deem it complete and acceptable and proceed with the cleanup according to the information in the change notice provided to the EPA Regional Administrator.

(iii) Any person conducting a cleanup activity may obtain a waiver of the 30-day notification requirement, if they receive a separate waiver, in writing, from each of the agencies they are required to notify under this section. The person must retain the original written waiver as required in paragraph (a)(9) of this section.

(4) *Cleanup levels*. For purposes of cleaning, decontaminating, or removing PCB remediation waste under this section, there are four general waste categories: bulk PCB remediation waste, non-porous surfaces, porous surfaces, and liquids. Cleanup levels are based on the kind of material and the potential exposure to PCBs left after cleanup is completed.

(i) *Bulk PCB remediation waste*. Bulk PCB remediation waste includes, but is not limited to, the following non-liquid PCB remediation waste: soil, sediments, dredged materials, muds, PCB sewage sludge, and industrial sludge.

(A) *High occupancy areas*. The cleanup level for bulk PCB remediation waste in high occupancy areas is ≤1 ppm without further conditions. High occupancy areas where bulk PCB remediation waste remains at concentrations >1 ppm and ≤10 ppm shall be covered with a cap meeting the requirements of paragraphs (a)(7) and (a)(8) of this section.

(B) *Low occupancy areas*. (*1*) The cleanup level for bulk PCB remediation waste in low occupancy areas is ≤25 ppm unless otherwise specified in this paragraph.

(*2*) Bulk PCB remediation wastes may remain at a cleanup site at concentrations >25 ppm and ≤50 ppm if the site is secured by a fence and marked with a sign including the M_L mark.

(*3*) Bulk PCB remediation wastes may remain at a cleanup site at concentrations >25 ppm and ≤100 ppm if the site is covered with a cap meeting the requirements of paragraphs (a)(7) and (a)(8) of this section.

(ii) *Non-porous surfaces*. In high occupancy areas, the surface PCB cleanup standard is ≤ 10 μg/100 cm^2 of surface area. In low occupancy areas, the surface cleanup standard is <100 μg/100 cm^2 of surface area. Select sampling locations in accordance with subpart P of this part or a sampling plan approved under paragraph (c) of this section.

(iii) *Porous surfaces*. In both high and low occupancy areas, any person disposing of porous surfaces must do so based on the levels in paragraph (a)(4)(i) of this section. Porous surfaces may be cleaned up for use in accordance with § 761.79(b)(4) or § 761.30(p).

(iv) *Liquids*. In both high and low occupancy areas, cleanup levels are the concentrations specified in § 761.79(b)(1) and (b)(2).

(v) *Change in the land use for a cleanup site*. Where there is an actual or proposed change in use of an area cleaned up to the levels of a low occupancy area, and the exposure of people or animal life in or at that area could reasonably be expected to increase, resulting in a change in status from a low occupancy area to a high occupancy area, the owner of the area shall clean up the area in accordance with the high occupancy area cleanup levels in paragraphs (a)(4)(i) through (a)(4)(iv) of this section.

(vi) The EPA Regional Administrator, as part of his or her response to a notification submitted in accordance with § 761.61(a)(3) of this part, may require cleanup of the site, or portions of it, to more stringent cleanup levels than are otherwise required in this section, based on the proximity to areas such as residential dwellings, hospitals, schools, nursing homes, playgrounds, parks, day care centers, endangered species habitats, estuaries, wetlands, national parks, national wildlife refuges, commercial fisheries, and sport fisheries.

(5) *Site cleanup*. In addition to the options set out in this paragraph, PCB disposal technologies approved under §§ 761.60 and 761.70 are acceptable for on-site self-implementing PCB remediation waste disposal within the confines of the operating conditions of the respective approvals.

(i) *Bulk PCB remediation waste*. Any person cleaning up bulk PCB remediation waste shall do so to the levels in paragraph (a)(4)(i) of this section.

(A) Any person cleaning up bulk PCB remediation waste on-site or using a soil washing process may do so without EPA approval, subject to all of the following:

(*1*) A non-chlorinated solvent is used.

(*2*) The process occurs at ambient temperature.

(*3*) The process is not exothermic.

(*4*) The process uses no external heat.

(*5*) The process has secondary containment to prevent any solvent from being released to the underlying or surrounding soils or surface waters.

(*6*) Solvent disposal, recovery, and/or reuse is in accordance with relevant provisions of approvals issued according to paragraphs (b)(1) or (c) of this section or applicable paragraphs of § 761.79.

(B) Bulk PCB remediation waste may be sent off-site for decontamination or disposal in accordance with this paragraph, provided the waste is either dewatered on-site or transported off-site in containers meeting the requirements of the DOT Hazardous Materials Regulations (HMR) at 49 CFR parts 171 through 180.

(*1*) Removed water shall be disposed of according to paragraph (b)(1) of this section.

(*2*) Any person disposing off-site of dewatered bulk PCB remediation waste shall do so as follows:

(*i*) Unless characterized for disposal according to subpart O, the bulk PCB remediation waste shall be assumed to contain ≥50 ppm PCBs.

(*ii*) Bulk PCB remediation wastes with a PCB concentration of <50 ppm shall be disposed of in accordance with paragraph (a)(5)(v)(A) of this section.

(*iii*) Bulk PCB remediation wastes with a PCB concentration ≥50 ppm shall be disposed of in a hazardous waste landfill permitted by EPA under section 3004 of RCRA, or by a State authorized under section 3006 of RCRA, or a PCB disposal facility approved under this part.

(*iv*) The generator must provide written notice, including the quantity to be shipped and highest concentration of PCBs (using extraction EPA Method 3500B/3540C or Method 3500B/3550B followed by chemical analysis using EPA Method 8082 in SW-846 or methods validated under subpart Q of this part) at least 15 days before the first shipment of bulk PCB remediation waste from each cleanup site by the generator, to each off-site facility where the waste is destined for an area not subject to a TSCA PCB Disposal Approval.

(*3*) Any person may decontaminate bulk PCB remediation waste in accordance with § 761.79 and return the waste to the cleanup site for disposal as long as the cleanup standards of paragraph (a)(4) of this section are met.

(ii) *Non-porous surfaces.* PCB remediation waste non-porous surfaces shall be cleaned on-site or off-site for disposal on-site, disposal off-site, or use, as follows:

(A) For on-site disposal, non-porous surfaces shall be cleaned on-site or off-site to the levels in paragraph (a)(4)(ii) of this section using:

(*1*) Procedures approved under § 761.79.

(*2*) Technologies approved under § 761.60(e).

(*3*) Procedures or technologies approved under paragraph (c) of this section.

(B) For off-site disposal, non-porous surfaces:

(*1*) Having surface concentrations <100 μg/100 cm^2 shall be disposed of in accordance with paragraph (a)(5)(i)(B)(*3*)(*ii*) of this section. Metal surfaces may be thermally decontaminated in accordance with § 761.79(c)(6)(i).

(*2*) Having surface concentrations ≥100 μg/100 cm^2 shall be disposed of in accordance with paragraph (a)(5)(i)(B)(*3*)(*iii*) of this section. Metal surfaces may be thermally decontaminated in accordance with § 761.79(c)(6)(ii).

(C) For use, non-porous surfaces shall be decontaminated on-site or off-site to the standards specified in § 761.79(b)(3) or in accordance with § 761.79(c).

(iii) *Porous surfaces.* Porous surfaces shall be disposed on-site or off-site as bulk PCB remediation waste according to paragraph (a)(5)(i) of this section or decontaminated for use according to § 761.79(b)(4), as applicable.

(iv) *Liquids.* Any person disposing of liquid PCB remediation waste shall either:

(A) Decontaminate the waste to the levels specified in § 761.79(b)(1) or (b)(2).

(B) Dispose of the waste in accordance with paragraph (b) of this section or an approval issued under paragraph (c) of this section.

(v) *Cleanup wastes.* Any person generating the following wastes during and from the cleanup of PCB remediation waste shall dispose of or reuse them using one of the following methods:

(A) Non-liquid cleaning materials and personal protective equipment waste at any concentration, including non-porous surfaces and other non-liquid materials such as rags, gloves, booties, other disposable personal protective equipment, and similar materials resulting from cleanup activities shall be disposed of in a facility permitted, licensed, or registered by a State to manage municipal solid waste subject to part 258 of this chapter or non-municipal non-hazardous waste subject to §§ 257.5 through 257.30 of this chapter, as applicable, a RCRA Subtitle C landfill permitted by a State to accept PCB waste, or a PCB disposal facility approved under this part. Requirements in subpart K of this part do not apply to this waste. Decontaminate this same waste in accordance with § 761.79(b) or (c).

(B) Cleaning solvents, abrasives, and equipment may be reused after decontamination in accordance with § 761.79.

(6) *Cleanup verification*—(i) *Sampling and analysis.* Any person collecting and analyzing samples to verify the cleanup and on-site disposal of bulk PCB remediation wastes and porous surfaces must do so in accordance with subpart O of this part. Any person collecting and analyzing samples from non-porous surfaces must do so in accordance with subpart P of this part. Any person collecting and analyzing samples from liquids must do so in accordance with § 761.269. Any person conducting interim sampling during PCB remediation waste cleanup to determine when to sample to verify that cleanup is complete, may use PCB field screening tests.

(ii) *Verification.* (A) Where sample analysis results in a measurement of PCBs less than or equal to the levels specified in paragraph (a)(4) of this section, self-implementing cleanup is complete.

(B) Where sample analysis results in a measurement of PCBs greater than the levels specified in paragraph (a)(4) of this section, self-implementing cleanup of the sampled PCB remediation waste is not complete. The owner or operator of the site must either dispose of the sampled PCB remediation waste, or reclean the waste represented by the sample and reinitiate sampling and analysis in accordance with paragraph (a)(6)(i) of this section.

(7) *Cap requirements.* A cap means, when referring to on-site cleanup and disposal of PCB remediation waste, a uniform placement of concrete, asphalt, or similar material of minimum thickness spread over the area where remediation waste was removed or left in place in order to prevent or minimize human exposure, infiltration of water, and erosion. Any person designing and constructing a cap must do so in accordance with § 264.310(a) of this chapter, and ensure that it complies with the permeability, sieve, liquid limit, and plasticity index parameters in § 761.75(b)(1)(ii) through (b)(1)(v). A cap of compacted soil shall have a minimum thickness of 25 cm (10 inches). A concrete or asphalt cap shall have a minimum thickness of 15 cm (6 inches). A cap must be of sufficient strength to maintain its effectiveness and integrity during the use of the cap surface which is exposed to the environment. A cap shall not be contaminated at a level ≥1 ppm PCB per Aroclor™ (or equivalent) or per congener. Repairs shall begin within 72 hours of discovery for any breaches which would impair the integrity of the cap.

(8) *Deed restrictions for caps, fences and low occupancy areas.* When a cleanup activity conducted under this section includes the use of a fence or a cap, the owner of the site must maintain the fence or cap, in perpetuity. In addition, whenever a cap, or the procedures and requirements for a low occupancy area, is used, the owner of the site must meet the following conditions:

(i) Within 60 days of completion of a cleanup activity under this section, the owner of the property shall:

(A) Record, in accordance with State law, a notation on the deed to the property, or on some other instrument which is normally examined during a title search, that will in perpetuity notify any potential purchaser of the property:

(*1*) That the land has been used for PCB remediation waste disposal and is

restricted to use as a low occupancy area as defined in § 761.3.

(2) Of the existence of the fence or cap and the requirement to maintain the fence or cap.

(3) The applicable cleanup levels left at the site, inside the fence, and/or under the cap.

(B) Submit a certification, signed by the owner, that he/she has recorded the notation specified in paragraph (a)(8)(i)(A) of this section to the EPA Regional Administrator.

(ii) The owner of a site being cleaned up under this section may remove a fence or cap after conducting additional cleanup activities and achieving cleanup levels, specified in paragraph (a)(4) of this section, which do not require a cap or fence. The owner may remove the notice on the deed no earlier than 30 days after achieving the cleanup levels specified in this section which do not require a fence or cap.

(9) *Recordkeeping.* For paragraphs (a)(3), (a)(4), and (a)(5) of this section, recordkeeping is required in accordance with § 761.125(c)(5).

(b) *Performance-based disposal.* (1) Any person disposing of liquid PCB remediation waste shall do so according to § 761.60(a) or (e), or decontaminate it in accordance with § 761.79.

(2) Any person disposing of non-liquid PCB remediation waste shall do so by one of the following methods:

(i) Dispose of it in a high temperature incinerator approved under § 761.70(b), an alternate disposal method approved under § 761.60(e), a chemical waste landfill approved under § 761.75, or in a facility with a coordinated approval issued under § 761.77.

(ii) Decontaminate it in accordance with § 761.79.

(3) Any person may manage or dispose of material containing <50 ppm PCBs that has been dredged or excavated from waters of the United States:

(i) In accordance with a permit that has been issued under section 404 of the Clean Water Act, or the equivalent of such a permit as provided for in regulations of the U.S. Army Corps of Engineers at 33 CFR part 320.

(ii) In accordance with a permit issued by the U.S. Army Corps of Engineers under section 103 of the Marine Protection, Research, and Sanctuaries Act, or the equivalent of such a permit as provided for in regulations of the U.S. Army Corps of Engineers at 33 CFR part 320.

(c) *Risk-based disposal approval.* (1) Any person wishing to sample, cleanup, or dispose of PCB remediation waste in a manner other than prescribed in paragraphs (a) or (b) of this section, or store PCB remediation waste in a manner other than prescribed in § 761.65, must apply in writing to the EPA Regional Administrator in the Region where the cleanup site is located. Each application must contain information described in the notification required by § 761.61(a)(3). EPA may request other information that it believes necessary to evaluate the application. No person may conduct cleanup activities under this paragraph prior to obtaining written approval by EPA.

(2) EPA will issue a written decision on each application for a risk-based method for PCB remediation wastes. EPA will approve such an application if it finds that the method will not pose an unreasonable risk of injury to health or the environment.

§ 761.62 Disposal of PCB bulk product waste.

PCB bulk product waste shall be disposed of in accordance with paragraph (a), (b), or (c) of this section. Under some of these provisions, it may not be necessary to determine the PCB concentration or leaching characteristics of the PCB bulk product waste. When it is necessary to analyze the waste to make either of these determinations, use the applicable procedures in subpart R of this part to sample the waste for analysis, unless EPA approves another sampling plan under paragraph (c) of this section.

(a) *Performance-based disposal.* Any person disposing of PCB bulk product waste may do so as follows:

(1) In an incinerator approved under § 761.70.

(2) In a chemical waste landfill approved under § 761.75.

(3) In a hazardous waste landfill permitted by EPA under section 3004 of RCRA, or by a State authorized under section 3006 of RCRA.

(4) Under an alternate disposal approval under § 761.60(e).

(5) In accordance with the decontamination provisions of § 761.79.

(6) For metal surfaces in contact with PCBs, in accordance with the thermal decontamination provisions of § 761.79(c)(6).

(7) In accordance with a TSCA PCB Coordinated Approval issued under § 761.77.

(b) *Disposal in solid waste landfills.* (1) Any person may dispose of the following PCB bulk product waste in a facility permitted, licensed, or registered by a State as a municipal or non-municipal non-hazardous waste landfill:

(i) Plastics (such as plastic insulation from wire or cable; radio, television and computer casings; vehicle parts; or furniture laminates); preformed or molded rubber parts and components; applied dried paints, varnishes, waxes or other similar coatings or sealants; caulking; Galbestos; non-liquid building demolition debris; or non-liquid PCB bulk product waste from the shredding of automobiles or household appliances from which PCB small capacitors have been removed (shredder fluff).

(ii) Other PCB bulk product waste, sampled in accordance with the protocols set out in subpart O of this part, that leaches PCBs at <10 μg/L of water measured using a procedure used to simulate leachate generation.

(2) Any person may dispose of PCB bulk product waste other than those materials meeting the conditions of paragraph (b)(1) of this section, (e.g., paper or felt gaskets contaminated by liquid PCBs in a facility that is permitted, licensed, or registered by a State to manage municipal solid waste subject to part 258 of this chapter or non-municipal non-hazardous waste subject to §§ 257.5 through 257.30 of this chapter, as applicable, if:

(i) The PCB bulk product waste is segregated from organic liquids disposed of in the landfill unit.

(ii) Leachate is collected from the landfill unit and monitored for PCBs.

(3) Any release of PCBs (including but not limited to leachate) from the landfill unit shall be cleaned up in accordance with § 761.61.

(4)(i) Any person disposing off-site of PCB bulk product waste regulated under paragraph (b)(1) of this section at a waste management facility not having a commercial PCB storage or disposal approval must provide written notice to the facility a minimum of 15 days in advance of the first shipment from the same disposal waste stream. The notice shall state that the PCB bulk product waste may include components containing PCBs at ≤50 ppm based on analysis of the waste in the shipment or application of a general knowledge of the waste stream (or similar material) which is known to contain PCBs at those levels, and that the PCB bulk product waste is known or presumed to leach <10 μg/L PCBs.

(ii) Any person disposing off-site of PCB bulk product waste regulated under paragraph (b)(2) of this section at a waste management facility not having a commercial PCB storage or disposal approval must provide written notice to the facility a minimum of 15 days in advance of the first shipment from the same disposal waste stream and with each shipment thereafter. The notice shall state that the PCB bulk product waste may include components containing PCBs at ≥50 ppm based on

analysis of the waste in the shipment or application of a general knowledge of the waste stream (or similar material) which is known to contain PCBs at those levels, and that the PCB bulk product waste is known or presumed to leach ≥10 μg/L PCBs.

(5) Any person disposing of PCB bulk product waste must maintain a written record of all sampling and analysis of PCBs or notifications made under this paragraph for 3 years from the date of the waste's generation. The records must be made available to EPA upon request.

(6) Requirements in subparts C and K of this part do not apply to waste disposed of under paragraph (b) of this section.

(c) *Risk-based cleanup approval.* (1) Any person wishing to sample or dispose of PCB bulk product waste in a manner other than prescribed in paragraphs (a) or (b) of this section, or store PCB bulk product waste in a manner other than prescribed in § 761.65, must apply in writing to: the EPA Regional Administrator in the Region where the disposal or storage site is located, for disposal or storage occurring in a single EPA Region; or the Director of the National Program Chemicals Division, for disposal or storage occurring in more than one EPA Region. Each application must contain information indicating that, based on technical, environmental, or waste-specific characteristics or considerations, the proposed storage or disposal methods or locations will not pose an unreasonable risk of injury to health or the environment. EPA may request other information that it believes necessary to evaluate the application. No person may conduct disposal or storage activities under this paragraph prior to obtaining written approval by EPA.

(2) EPA will issue a written decision on each application for a risk-based storage or disposal method for PCB bulk product wastes. EPA will approve such an application if it finds that the method will not pose an unreasonable risk of injury to health or the environment.

(d) *Disposal as daily landfill cover or roadbed.* Bulk product waste described in paragraph (b)(1) of this section may be disposed of:

(1) As daily landfill cover as long as the daily cover remains in the landfill and is not released or dispersed by wind or other action; or

(2) Under asphalt as part of a road bed.

§ 761.63 PCB household waste storage and disposal.

PCB household waste, as defined at § 761.3, managed in a facility permitted, licensed, or registered by a State to manage municipal or industrial solid waste, or in a facility with an approval to dispose of PCB bulk product waste under § 761.62(c), is not subject to any other requirements of part 761 of this chapter. PCB household waste stored in a unit regulated for storage of PCB waste must not be commingled with PCB waste.

§ 761.64 Disposal of wastes generated as a result of research and development activities authorized under § 761.30(j) and chemical analysis of PCBs.

This section provides disposal requirements for wastes generated during and as a result of research and development authorized under § 761.30(j). This section also provides disposal requirements for wastes generated during the chemical analysis of samples containing PCBs under part 761, including §§ 761.30, 761.60, 761.61, 761.62, and 761.79. For determining the presence of PCBs in samples, chemical analysis includes: sample preparation, sample extraction, extract cleanup, extract concentration, addition of PCB standards, and instrumental analysis.

(a) Portions of samples of a size designated in a chemical extraction and analysis method for PCBs and extracted for purposes of determining the presence of PCBs or concentration of PCBs are unregulated for PCB disposal under this part.

(b) All other wastes generated during these activities are regulated for disposal based on their concentration at the time of disposal as follows:

(1) Liquid wastes, including rinse solvents, must be disposed of according to § 761.61(a)(5)(iv).

(2) Non-liquid wastes must be disposed of in the same manner as non-liquid cleaning materials and personal protective equipment waste according to § 761.61(a)(5)(v)(A).

n. In § 761.65, by revising paragraphs (a), (b) introductory text, (b)(1)(ii), (b)(1)(iv), and by adding paragraph (b)(2); by revising paragraph (c)(1)(iv); by removing the terms ''facilities'' and ''facility'' and adding, in their place, the terms ''units'' and ''unit'', respectively in paragraph (c)(4), by revising paragraphs (c)(5), (c)(6), (c)(7) introductory text, and (c)(8); by redesignating paragraph (c)(9) as (c)(10) and adding a new paragraph (c)(9); in paragraph (d)(2)(iii) by removing the term ''facility'' and adding, in its place, the term ''unit''; by redesignating paragraph (g)(7) as (g)(8) and by adding new paragraphs (g)(7) and (g)(9); by redesignating paragraph (j) as paragraph (k) and adding a new paragraph (j), to read as follows:

§ 761.65 Storage for disposal.

* * * * *

(a)(1) *Storage limitations.* Any PCB waste shall be disposed of as required by subpart D of this part within 1-year from the date it was determined to be PCB waste and the decision was made to dispose of it. This date is the date of removal from service for disposal and the point at which the 1-year time frame for disposal begins. PCB/radioactive waste removed from service for disposal is exempt from the 1-year time limit provided that the provisions at paragraphs (a)(2)(ii) and (a)(2)(iii) of this section are followed and the waste is managed in accordance with all other applicable Federal, State, and local laws and regulations for the management of radioactive material.

(2) *One-year extension.* Any person storing PCB waste that is subject to the 1-year time limit for storage and disposal in paragraph (a)(1) of this section may provide written notification to the EPA Regional Administrator for the Region in which the PCB waste is stored that their continuing attempts to dispose of or secure disposal for their waste within the 1-year time limit have been unsuccessful. Upon receipt of the notice by the EPA Regional Administrator, the time for disposal is automatically extended for 1 additional year (2 years total) if the following conditions are met:

(i) The notification is received by the EPA Regional Administrator at least 30 days before the initial 1-year time limit expires and the notice identifies the storer, the types, volumes, and locations of the waste and the reasons for failure to meet the initial 1-year time limit.

(ii) A written record documenting all continuing attempts to secure disposal is maintained until the waste is disposed of.

(iii) The written record required by paragraph (a)(2)(ii) of this section is available for inspection or submission if requested by EPA.

(iv) Continuing attempts to secure disposal were initiated within 270 days after the time the waste was first subject to the 1-year time limit requirement, as specified in paragraph (a)(1) of this section. Failure to initiate and continue attempts to secure disposal throughout the total time the waste is in storage shall automatically disqualify the notifier from receiving an automatic extension under this section.

(3) *Additional extensions*. Upon written request, the EPA Regional Administrator for the Region in which the wastes are stored or the Director, National Program Chemicals Division, may grant additional extensions beyond the 1-year extension authorized in paragraph (a)(2) of this section. At the time of the request, the requestor must supply specific justification for the additional extension and indicate what measures the requestor is taking to secure disposal of the waste or indicate why disposal could not be conducted during the period of the prior extension. The EPA Regional Administrator or the Director, National Program Chemicals Division may require, as a condition to granting any extension under this section, specific actions including, but not limited to, marking, inspection, recordkeeping, or financial assurance to ensure that the waste does not pose an unreasonable risk of injury to health or the environment.

(4) *Storage at an approved facility*. Increased time for storage may be granted as a condition of any TSCA PCB storage or disposal approval, by the EPA Regional Administrator for the Region in which the PCBs or PCB Items are to be stored or disposed of, or by the Director, National Program Chemicals Division, if EPA determines that there is a demonstrated need or justification for additional time, that the owner or operator of the facility is pursuing relevant treatment or disposal options, and that no unreasonable risk of injury to health or the environment will result from the increased storage time. In making this determination, EPA will consider such factors as absence of any approved treatment technology and insufficient time to complete the treatment or destruction process. EPA may require as a condition of the approval that the owner or operator submit periodic progress reports.

(b) Except as provided in paragraphs (b)(2), (c)(1), (c)(7), (c)(9), and (c)(10) of this section, after July 1, 1978, owners or operators of any facilities used for the storage of PCBs and PCB Items designated for disposal shall comply with the following storage unit requirements:

(1) * * *

(ii) An adequate floor that has continuous curbing with a minimum 6 inch high curb. The floor and curbing must provide a containment volume equal to at least two times the internal volume of the largest PCB Article or PCB Container or 25 percent of the total internal volume of all PCB Articles or PCB Containers stored there, whichever is greater. PCB/radioactive wastes are not required to be stored in an area with a minimum 6 inch high curbing. However, the floor and curbing must still provide a containment volume equal to at least two times the internal volume of the largest PCB Container or 25 percent of the total internal volume of all PCB Containers stored there, whichever is greater.

* * * * *

(iv) Floors and curbing constructed of Portland cement, concrete, or a continuous, smooth, non-porous surface as defined at § 761.3, which prevents or minimizes penetration of PCBs.

* * * * *

(2) No person may store PCBs and PCB Items designated for disposal in a storage unit other than one approved pursuant to paragraph (d) of this section or meeting the design requirements of paragraph (b) of this section, unless the unit meets one of the following conditions:

(i) Is permitted by EPA under section 3004 of RCRA to manage hazardous waste in containers, and spills of PCBs are cleaned up in accordance with subpart G of this part.

(ii) Qualifies for interim status under section 3005 of RCRA to manage hazardous waste in containers, meets the requirements for containment at § 264.175 of this chapter, and spills of PCBs are cleaned up in accordance with subpart G of this part.

(iii) Is permitted by a State authorized under section 3006 of RCRA to manage hazardous waste in containers, and spills of PCBs are cleaned up in accordance with subpart G of this part.

(iv) Is approved or otherwise regulated pursuant to a State PCB waste management program no less stringent in protection of health or the environment than the applicable TSCA requirements found in this part.

(v) Is subject to a TSCA Coordinated Approval, which includes provisions for storage of PCBs, issued pursuant to § 761.77.

(vi) Has a TSCA PCB waste management approval, which includes provisions for storage, issued pursuant to § 761.61(c) or § 761.62(c).

(c)(1) * * *

(iv) PCB containers containing liquid PCBs at concentrations of ≥50 ppm, provided a Spill Prevention, Control and Countermeasure Plan has been prepared for the temporary storage area in accordance with part 112 of this chapter and the liquid PCB waste is in packaging authorized in the DOT Hazardous Materials Regulations at 49 CFR parts 171 through 180 or stationary bulk storage tanks (including rolling stock such as, but not limited to, tanker trucks, as specified by DOT).

* * * * *

(5) All PCB Items in storage shall be checked for leaks at least once every 30 days. Any leaking PCB Items and their contents shall be transferred immediately to properly marked non-leaking containers. Any spilled or leaked materials shall be immediately cleaned up and the materials and residues containing PCBs shall be disposed of in accordance with § 761.61. Records of inspections, maintenance, cleanup and disposal must be maintained in accordance with § 761.180(a) and (b).

(6) Except as provided in paragraphs (c)(6)(i) and (c)(6)(ii) of this section, any container used for the storage of liquid or non-liquid PCB waste shall be in accordance with the requirements set forth in the DOT Hazardous Materials Regulations (HMR) at 49 CFR parts 171 through 180. PCB waste not subject to the HMR (i.e., PCB wastes at concentrations of <20 ppm or <1 pound of PCBs regardless of concentration) must be packaged in accordance with Packaging Group III, unless other hazards associated with the PCB waste cause it to require packaging in accordance with Packaging Groups I or II. For purposes of describing PCB waste not subject to DOT's HMR on a manifest, one may use the term ''Non-DOT Regulated PCBs.''

(i) Containers other than those meeting HMR performance standards may be used for storage of PCB/radioactive waste provided the following requirements are met:

(A) Containers used for storage of liquid PCB/radioactive wastes must be non-leaking.

(B) Containers used for storage of non-liquid PCB/ radioactive wastes must be designed to prevent the buildup of liquids if such containers are stored in an area meeting the containment requirements of paragraph (b)(1)(ii) of this section, as well as all other applicable State or Federal regulations or requirements for control of radioactive materials.

(C) Containers used to store both liquid and non-liquid PCB/radioactive wastes must meet all regulations and requirements pertaining to nuclear criticality safety. Acceptable container materials currently include polyethylene and stainless steel provided that the container material is chemically compatible with the wastes being stored. Other containers may be used to store both liquid and non-liquid PCB/radioactive wastes if the users are able to demonstrate, to the appropriate Regional Administrator and other appropriate regulatory authorities (i.e., Nuclear Regulatory Commission, Department of Energy or the Department

of Transportation), that the use of such containers is protective of health and the environment as well as public health and safety.

(ii) The following DOT specification containers that conform to the requirements of 49 CFR, chapter I, subchapter C in effect on September 30, 1991, may be used for storage and transportation activities that are not subject to DOT regulation, and may be used on a transitional basis as permitted at 49 CFR 171.14. For liquid PCBs: Specification 5 container without removable head, Specification 5B container without removable head, Specification 6D overpack with Specification 2S or 2SL polyethylene containers, or Specification 17E container. For non-liquid PCBs: Specification 5 container, Specification 5B container, or Specification 17C container.

(7) Stationary storage containers for liquid PCBs can be larger than the containers specified in paragraph (c)(6) of this section provided that:

* * * * *

(8) PCB Items shall be dated on the item when they are removed from service for disposal. The storage shall be managed so that the PCB Items can be located by this date. Storage containers provided in paragraph (c)(7) of this section, shall have a record that includes for each batch of PCBs the quantity of the batch and date the batch was added to the container. The record shall also include the date, quantity, and disposition of any batch of PCBs removed from the container.

(9) Bulk PCB remediation waste or PCB bulk product waste may be stored at the clean-up site or site of generation for 180 days subject to the following conditions:

(i) The waste is placed in a pile designed and operated to control dispersal of the waste by wind, where necessary, by means other than wetting.

(ii) The waste must not generate leachate through decomposition or other reactions.

(iii) The storage site must have:

(A) A liner that is designed, constructed, and installed to prevent any migration of wastes off or through the liner into the adjacent subsurface soil, ground water or surface water at any time during the active life (including the closure period) of the storage site. The liner may be constructed of materials that may allow waste to migrate into the liner. The liner must be:

(*1*) Constructed of materials that have appropriate chemical properties and sufficient strength and thickness to prevent failure due to pressure gradients (including static head and external hydrogeologic forces), physical contact with the waste or leachate to which they are exposed, climatic conditions, the stress of installation, and the stress of daily operation.

(*2*) Placed upon a foundation or base capable of providing support to the liner and resistance to pressure gradients above and below the liner to prevent failure of the liner due to settlement, compression, or uplift.

(*3*) Installed to cover all surrounding earth likely to be in contact with the waste.

(B) A cover that meets the requirements of paragraph (c)(9)(iii)(A) of this section, is installed to cover all of the stored waste likely to be contacted with precipitation, and is secured so as not to be functionally disabled by winds expected under normal seasonal meteorological conditions at the storage site.

(C) A run-on control system designed, constructed, operated, and maintained such that:

(*1*) It prevents flow onto the stored waste during peak discharge from at least a 25-year storm.

(*2*) It collects and controls at least the water volume resulting from a 24-hour, 25-year storm. Collection and holding facilities (e.g., tanks or basins) must be emptied or otherwise managed expeditiously after storms to maintain design capacity of the system.

(iv) The provisions of this paragraph may be modified under § 761.61(c).

* * * * *

(g) * * *

(7) The corporate guarantee as specified in § 264.143(f)(10) of this chapter.

* * * * *

(9) A modification to a facility storing PCB waste that increases the maximum storage capacity indicated in the permit requires that a new financial assurance mechanism be established or an existing one be amended. When such a modification occurs, the Director of the Federal or State issuing authority must be notified in writing no later than 30 days from the completion of the modification. The new or revised financial assurance mechanism must be established and activated no later than 30 days after the Director of the Federal or State issuing authority is notified of the completion of the modification, but prior to the use of the modified portion of the facility.

* * * * *

(j) *Changes in ownership or operational control of a commercial storage facility*. The date of transfer of interim status or final approval shall be the date the EPA Regional Administrator (or Director, National Program Chemicals Division) provides written approval of the transfer. EPA will provide a final written decision within 90 days of receipt of the complete new or amended application. The Agency will approve the transfer if the following conditions are met:

(1) The transferee has established financial assurance for closure pursuant to paragraph (g) of this section using a mechanism effective as of the date of final approval so that there will be no lapse in financial assurance for the transferred facility.

(2) The transferor or transferee has resolved any deficiencies (e.g., technical operations, closure plans, cost estimates, etc.) the Agency has identified in the transferor's application.

* * * * *

o. By adding §§ 761.71 and 761.72 to read as follows:

§ 761.71 High efficiency boilers.

(a) To burn mineral oil dielectric fluid containing a PCB concentration of ≥50 ppm, but <500 ppm:

(1) The boiler shall comply with the following criteria:

(i) The boiler is rated at a minimum of 50 million BTU hours.

(ii) If the boiler uses natural gas or oil as the primary fuel, the carbon monoxide concentration in the stack is ≤50 ppm and the excess oxygen is at least 3 percent when PCBs are being burned.

(iii) If the boiler uses coal as the primary fuel, the carbon monoxide concentration in the stack is ≤100 ppm and the excess oxygen is at least 3 percent when PCBs are being burned.

(iv) The mineral oil dielectric fluid does not comprise more than 10 percent (on a volume basis) of the total fuel feed rate.

(v) The mineral oil dielectric fluid is not fed into the boiler unless the boiler is operating at its normal operating temperature (this prohibits feeding these fluids during either start up or shut down operations).

(vi) The owner or operator of the boiler:

(A) Continuously monitors and records the carbon monoxide concentration and excess oxygen percentage in the stack gas while burning mineral oil dielectric fluid; or

(B) If the boiler will burn <30,000 gallons of mineral oil dielectric fluid per year, measures and records the carbon monoxide concentration and excess oxygen percentage in the stack gas at regular intervals of no longer than 60 minutes while burning mineral oil dielectric fluid.

(vii) The primary fuel feed rates, mineral oil dielectric fluid feed rates,

and total quantities of both primary fuel and mineral oil dielectric fluid fed to the boiler are measured and recorded at regular intervals of no longer than 15 minutes while burning mineral oil dielectric fluid.

(viii) The carbon monoxide concentration and the excess oxygen percentage are checked at least once every hour that mineral oil dielectric fluid is burned. If either measurement falls below the levels specified in this section, the flow of mineral oil dielectric fluid to the boiler shall be stopped immediately.

(2) Thirty days before any person burns mineral oil dielectric fluid in the boiler, the person gives written notice to the EPA Regional Administrator for the EPA Region in which the boiler is located and that the notice contains the following information:

(i) The name and address of the owner or operator of the boiler and the address of the boiler.

(ii) The boiler rating in units of BTU/hour.

(iii) The carbon monoxide concentration and the excess oxygen percentage in the stack of the boiler when it is operated in a manner similar to the manner in which it will be operated when mineral oil dielectric fluid is burned.

(iv) The type of equipment, apparatus, and procedures to be used to control the feed of mineral oil dielectric fluid to the boiler and to monitor and record the carbon monoxide concentration and excess oxygen percentage in the stack.

(3) When burning mineral oil dielectric fluid, the boiler must operate at a level of output no less than the output at which the measurements required under paragraph (a)(2)(iii) of this section were taken.

(4) Any person burning mineral oil dielectric fluid in a boiler obtains the following information and retains the information for 5 years at the boiler location:

(i) The data required to be collected under paragraphs (a)(1)(vi) and (vii) of this section.

(ii) The quantity of mineral oil dielectric fluid burned in the boiler each month.

(b) To burn liquids, other than mineral oil dielectric fluid, containing a PCB concentration of ≥50 ppm, but <500 ppm:

(1) The boiler shall comply with the following criteria:

(i) The boiler is rated at a minimum of 50 million BTU/hour.

(ii) If the boiler uses natural gas or oil as the primary fuel, the carbon monoxide concentration in the stack is ≤50 ppm and the excess oxygen is at least 3 percent when PCBs are being burned.

(iii) If the boiler uses coal as the primary fuel, the carbon monoxide concentration in the stack is ≤100 ppm and the excess oxygen is at least 3 percent when PCBs are being burned.

(iv) The waste does not comprise more than 10 percent (on a volume basis) of the total fuel feed rate.

(v) The waste is not fed into the boiler unless the boiler is operating at its normal operating temperature (this prohibits feeding these fluids during either start up or shut down operations).

(vi) The owner or operator of the boiler must:

(A) Continuously monitor and record the carbon monoxide concentration and excess oxygen percentage in the stack gas while burning waste fluid; or

(B) If the boiler will burn <30,000 gallons of waste fluid per year, measure and record the carbon monoxide concentration and excess oxygen percentage in the stack gas at regular intervals of no longer than 60 minutes while burning waste fluid.

(vii) The primary fuel feed rate, waste fluid feed rate, and total quantities of both primary fuel and waste fluid fed to the boiler must be measured and recorded at regular intervals of no longer than 15 minutes while burning waste fluid.

(viii) The carbon monoxide concentration and the excess oxygen percentage must be checked at least once every hour that the waste is burned. If either measurement falls below the levels specified in either (a)(1)(ii) or (a)(1)(iii) of this section, the flow of waste to the boiler shall be stopped immediately.

(2) Prior to any person burning these liquids in the boiler, approval must be obtained from the EPA Regional Administrator for the EPA Region in which the boiler is located and any persons seeking such approval must submit to the EPA Regional Administrator a request containing at least the following information:

(i) The name and address of the owner or operator of the boiler and the address of the boiler.

(ii) The boiler rating in units of BTU/hour.

(iii) The carbon monoxide concentration and the excess oxygen percentage in the stack of the boiler when it is operated in a manner similar to the manner in which it will be operated when low concentration PCB liquid is burned.

(iv) The type of equipment, apparatus, and procedures to be used to control the feed of mineral oil dielectric fluid to the boiler and to monitor and record the carbon monoxide concentration and excess oxygen percentage in the stack.

(v) The type of waste to be burned (e.g., hydraulic fluid, contaminated fuel oil, heat transfer fluid, etc.).

(vi) The concentration of PCBs and of any other chlorinated hydrocarbon in the waste and the results of analyses using the American Society of Testing and Materials (ASTM) methods as follows: Carbon and hydrogen content using ASTM D-3178-84, nitrogen content using ASTM E-258-67 (Reapproved 1987), sulfur content using ASTM D-2784-89, ASTM D-1266-87, or ASTM D-129-64, chlorine content using ASTM D-808-87, water and sediment content using either ASTM D-2709-88 or ASTM D-1796-83 (Reapproved 1990), ash content using ASTM D-482-87, calorific value using ASTM D-240-87, carbon residue using either ASTM D-2158-89 or ASTM D-524-88, and flash point using ASTM D-93-90.

(vii) The quantity of wastes estimated to be burned in a 30–day period.

(viii) An explanation of the procedures to be followed to ensure that burning the waste will not adversely affect the operation of the boiler such that combustion efficiency will decrease.

(3) On the basis of the information in paragraph (b)(2) of this section and any other available information, the Regional Administrator may, at his/her discretion, find that the alternate disposal method will not present an unreasonable risk of injury to health or the environment and approve the use of the boiler.

(4) When burning PCB wastes, the boiler must operate at a level of output no less than the output at which the measurements required under paragraph (b)(2)(iii) of this section were taken.

(5) Any person burning liquids in boilers approved as provided in paragraph (b)(3) of this section, must obtain the following information and retain the information for 5 years at the boiler location:

(i) The data required to be collected in paragraphs (b)(1)(vi) and (b)(1)(vii) of this section.

(ii) The quantity of low concentration PCB liquid burned in the boiler each month.

(iii) The analysis of the waste required by paragraph (b)(2)(vi) of this section taken once a month for each month during which low concentration PCB liquid is burned in the boiler.

§ 761.72 Scrap metal recovery ovens and smelters.

Any person may dispose of residual PCBs associated with PCB-Contaminated articles regulated for

disposal under § 761.60(b), metal surfaces in PCB remediation waste regulated under § 761.61, or metal surfaces in PCB bulk product waste regulated under §§ 761.62(a)(6) and 761.79(c)(6), from which all free-flowing liquids have been removed:

(a) In a scrap metal recovery oven:

(1) The oven shall have at least two enclosed (i.e., negative draft, no fugitive emissions) interconnected chambers.

(2) The equipment with all free-flowing liquid removed shall first be placed in the primary chamber at room temperature.

(3) The primary chamber shall operate at a temperature between 537 °C and 650 °C for a minimum of 2½ hours and reach a minimum temperature of 650 °C (1,202 °F) once during each heating cycle or batch treatment of unheated, liquid-free equipment.

(4) Heated gases from the primary chamber must feed directly into the secondary chamber (i.e., afterburner) which must operate at a minimum temperature of 1,200 °C (2,192 °F) with at least a 3 percent excess oxygen and a retention time of 2.0 seconds with a minimum combustion efficiency of 99.9 percent according to the definition in § 761.70(a)(2).

(5) Heating of the primary chamber shall not commence until the secondary chamber has reached a temperature of 1,200 ± 100 °C (2,192 ° ± 180 °F).

(6) Continuous emissions monitors and recorders for carbon dioxide, carbon monoxide, and excess oxygen in the secondary chamber and continuous temperature recorders in the primary and secondary chambers shall be installed and operated while the primary and secondary chambers are in operation to assure that the two chambers are within the operating parameters in paragraphs (a)(3) through (a)(5) of this section.

(7) Emissions from the secondary chamber shall be vented through an exhaust gas stack in accordance with valid State and local air regulations and permits, which include a standard for PCBs or meets the standards in paragraph (a)(8) of this section.

(8) Exhaust gas stack emissions shall be for: particulates <0.015 grains/dry standard cubic foot, sulfur dioxide <35 parts per million by volume (ppmv), nitrogen oxide <150 ppmv, carbon monoxide <35 ppmv, and hydrogen chloride <35 ppmv.

(9) A measurement of the temperature in the secondary chamber at the time the primary chamber starts heating must be taken, recorded and retained at the facility for 3 years from the date each charge is introduced into the primary chamber.

(b) By smelting:

(1) The operating temperature of the hearth must be at least 1,000 °C at the time it is charged with any PCB-Contaminated non-porous surface.

(2) Each charge containing a PCB-Contaminated item must be added into molten metal or a hearth at ≥1,000 °C.

(3) Successive charges may not be introduced into the hearth in less than 15–minute intervals.

(4) The smelter must operate in compliance with any applicable emissions standards in part 60 of this chapter.

(5) The smelter must have an operational device which accurately measures directly or indirectly, the temperature in the hearth.

(6) Take, record and retain at the disposal facility for 3 years from the date each charge is introduced, a reading of the temperature in the hearth at the time it is charged with a non-porous surface item.

(c)(1) Scrap metal recovery ovens and smelters must either have a final permit under RCRA (part 266, subpart H of this chapter and § 270.66 of this chapter) or be operating under a valid State air emissions permit which includes a standard for PCBs.

(2) Scrap metal recovery ovens and smelters disposing of PCBs must provide notification as disposers of PCBs, are not required to submit annual reports, and shall otherwise comply with all applicable provisions of subparts J and K of this part, as well as other applicable Federal, State, and local laws and regulations.

(3) In lieu of the requirement in paragraphs (a) and (b) of this section, upon written request by the owner or operator of a scrap metal recovery oven or smelter, the EPA Regional Administrator, for the Region where the oven or smelter is located, may make a finding in writing, based on a site-specific risk assessment, that the oven or smelter does not pose an unreasonable risk of injury to health or the environment because it is operating in compliance with the parameters and conditions listed in paragraphs (a)(1) through (a)(8) and (b)(1) through (b)(9) of this section even though the oven or smelter does not have a RCRA or State air permit as required by paragraph (c)(1) of this section. The written request shall include a site-specific risk assessment.

(d) PCB liquids, other liquid waste qualifying as waste oils which may be used as provided for at § 761.20(e), or PCB remediation waste, other than PCB-Contaminated articles, may not be disposed of in a scrap metal recovery oven or smelter unless approved or otherwise allowed under subpart D of this part.

§ 761.75 [Amended]

p. In § 761.75, by removing the term ''facility'' and adding, in its place, the term ''unit'' wherever it appears in paragraphs (b)(7)(i), (b)(7)(ii), and (b)(7)(iii).

q. By adding § 761.77 to read as follows:

§ 761.77 Coordinated approval.

(a) *General requirements.* Notwithstanding any other provision of this part, the EPA Regional Administrator for the Region in which a PCB disposal or PCB commercial storage facility described in paragraphs (b) and (c) of this section is located may issue a TSCA PCB Coordinated Approval to the persons described in those paragraphs if the conditions listed in this section are met. A TSCA PCB Coordinated Approval will designate the persons who own and who are authorized to operate the facilities described in paragraphs (b) and (c) of this section and will apply only to such persons. All requirements, conditions, and limitations of any other permit or waste management document cited or described in paragraphs (b) and (c) of this section, as the technical or legal basis on which the TSCA PCB Coordinated Approval is issued, are conditions of the TSCA PCB Coordinated Approval.

(1) Persons seeking a TSCA PCB Coordinated Approval shall submit a request for approval by certified mail, to the EPA Regional Administrator for the Region in which the activity will take place. Persons seeking a TSCA PCB Coordinated Approval for a new PCB activity shall submit the request for approval at the same time they seek a permit, approval, or other action for a PCB waste management activity under any other Federal or State authority.

(i) The request for a TSCA PCB Coordinated Approval shall include a copy of the letter from EPA announcing or confirming the EPA identification number issued to the facility for conducting PCB activities; the name, organization, and telephone number of the person who is the contact point for the non-TSCA Federal or State waste management authority; a copy of the relevant permit or waste management document specified in paragraphs (b) and (c) of this section, including all requirements, conditions, and limitations, if the EPA Regional Administrator does not have a copy of the document, or a description of the waste management activities to be

conducted if a permit or other relevant waste management document has not been issued; and a certification that the person who owns or operates the facility is aware of and will adhere to the TSCA PCB reporting and recordkeeping requirements at subparts J and K of this part.

(ii) The EPA Regional Administrator shall review the request for completeness, for compliance with the requirements of paragraphs (b) and (c) of this section, and to ensure that the PCB activity for which approval is requested will not present an unreasonable risk of injury to health or the environment. The EPA Regional Administrator shall either:

(A) Issue a written notice of deficiency explaining why the request for approval is deficient. If appropriate, the EPA Regional Administrator may either:

(*1*) Request additional information to cure the deficiency.

(*2*) Deny the request for a TSCA PCB Coordinated Approval.

(B) Issue a letter granting or denying the TSCA PCB Coordinated Approval. If the EPA Regional Administrator grants the TSCA PCB Coordinated Approval, he or she may acknowledge the non-TSCA approval meets the regulatory requirements under TSCA as written, or require additional conditions the EPA Regional Administrator has determined are necessary to prevent unreasonable risk of injury to health or the environment.

(C) If the EPA Regional Administrator denies a request for a Coordinated Approval under paragraphs (a)(1)(ii)(A) or (a)(1)(ii)(B) of this section, the person who requested the TSCA PCB Coordinated Approval may submit an application for a TSCA Disposal Approval.

(2) The EPA Regional Administrator may issue a notice of deficiency, revoke the TSCA PCB Coordinated Approval, require the person to whom the TSCA PCB Coordinated Approval was issued to submit an application for a TSCA PCB approval, or bring an enforcement action under TSCA if he or she determines that:

(i) Conditions of the approval relating to PCB waste management activities are not met.

(ii) The PCB waste management process is being operated in a manner which may result in an unreasonable risk of injury to health or the environment.

(iii) The non-TSCA approval expires, is revoked, is suspended, or otherwise ceases to be in full effect.

(3) Any person with a TSCA PCB Coordinated Approval must notify the EPA Regional Administrator in writing within 5 calendar days of changes relating to PCB waste requirements in the non-TSCA waste management document which serves as the basis for a TSCA PCB Coordinated Approval. Changes in the ownership of a commercial storage facility which holds a TSCA PCB Coordinated Approval shall be handled pursuant to § 761.65(j).

(b) Any person who owns or operates a facility that he or she intends to use to landfill PCB wastes; incinerate PCB wastes; dispose of PCB wastes using an alternative disposal method that is equivalent to disposal in an incinerator approved under § 761.70 or a high efficiency boiler operating in compliance with § 761.71; or stores PCB wastes may apply for a TSCA PCB Coordinated Approval. The EPA Regional Administrator may approve the request if the EPA Regional Administrator determines that the activity will not pose an unreasonable risk of injury to health or the environment and the person:

(1)(i) Has a waste management permit or other decision or enforcement document which exercises control over PCB wastes, issued by EPA or an authorized State Director for a State program that has been approved by EPA and is no less stringent in protection of health or the environment than the applicable TSCA requirements found in this part; or

(ii) Has a PCB waste management permit or other decision or enforcement document issued by a State Director pursuant to a State PCB waste management program no less stringent in protection of health or the environment than the applicable TSCA requirements found in this part; or

(iii) Is subject to a waste management permit or other decision or enforcement document which is applicable to the disposal of PCBs and which was issued through the promulgation of a regulation published in Title 40 of the Code of Federal Regulations.

(2) Complies with the terms and conditions of the permit or other decision or enforcement document described in paragraph (b)(1) of this section.

(3) Unless otherwise waived or modified in writing by the EPA Regional Administrator, complies with § 761.75(b); § 761.70(a)(1) through (a)(9), (b)(1) and (b)(2), and (c); or the PCB storage requirements at §§ 761.65(a), (c), and (d)(2), as appropriate.

(4) Complies with the reporting and recordkeeping requirements in subparts J and K of this part.

(c) A person conducting research and development (R&D) into PCB disposal methods (regardless of PCB concentration), or conducting PCB remediation activities may apply for a TSCA PCB Coordinated Approval. The EPA Regional Administrator may approve the request if the EPA Regional Administrator determines that the activity will not pose an unreasonable risk of injury to health or the environment and the person:

(1)(i) Has a permit or other decision and enforcement document issued or otherwise agreed to by EPA, or permit or other decision and enforcement document issued by an authorized State Director for a State program that has been approved by EPA, which exercises control over the management of PCB wastes, and that person is in compliance with all terms and conditions of that document; or

(ii) Has a permit, which exercises control over the management of PCB wastes, issued by a State Director pursuant to a State PCB disposal program no less stringent than the requirements in this part.

(2) Complies with the terms and conditions of that permit or other decision and enforcement document.

(3) Complies with the reporting and recordkeeping requirements in subparts J and K of this part.

r. By revising § 761.79 to read as follows:

§ 761.79 Decontamination standards and procedures.

(a) *Applicability*. This section establishes decontamination standards and procedures for removing PCBs, which are regulated for disposal, from water, organic liquids, non-porous surfaces (including scrap metal from disassembled electrical equipment), concrete, and non-porous surfaces covered with a porous surface, such as paint or coating on metal.

(1) Decontamination in accordance with this section does not require a disposal approval under subpart D of this part.

(2) Materials from which PCBs have been removed by decontamination in accordance with this section may be distributed in commerce in accordance with § 761.20(c)(5).

(3) Materials from which PCBs have been removed by decontamination in accordance with this section may be used or reused in accordance with § 761.30(u).

(4) Materials from which PCBs have been removed by decontamination in accordance with this section, not including decontamination waste and residuals under paragraph (g) of this section, are unregulated for disposal under subpart D of this part.

(5) Any person decontaminating porous surfaces other than concrete under paragraph (b)(4) of this section and non-porous surfaces covered with a porous surface, such as paint or coating on metal, under paragraph (b)(3) or (c)(8) of this section must obtain an alternative decontamination approval in accordance with paragraph (h) of this section.

(6) Any person engaging in decontamination under this section is responsible for determining and complying with all other applicable Federal, State, and local laws and regulations.

(b) *Decontamination standards.* Chopping (including wire chopping), distilling, filtering, oil/water separation, spraying, soaking, wiping, stripping of insulation, scraping, scarification or the use of abrasives or solvents may be used to remove or separate PCBs, to the following standards, from liquids, concrete, or non-porous surfaces.

(1) The decontamination standard for water containing PCBs is:

(i) Less than 200 μg/L (i.e., <200 ppb PCBs) for non-contact use in a closed system where there are no releases;

(ii) For water discharged to a treatment works (as defined in § 503.9(aa) of this chapter) or to navigable waters, <3 μg/L (approximately <3 ppb) or a PCB discharge limit included in a permit issued under section 307(b) or 402 of the Clean Water Act; or

(iii) Less than or equal to 0.5 μg/L (i.e., approximately ≤0.5 ppb PCBs) for unrestricted use.

(2) The decontamination standard for organic liquids and non-aqueous inorganic liquids containing PCBs is <2 milligrams per kilogram (i.e., <2 ppm PCBs).

(3) The decontamination standard for non-porous surfaces in contact with liquid and non-liquid PCBs is:

(i) For unrestricted use:

(A) For non-porous surfaces previously in contact with liquid PCBs at any concentration, where no free-flowing liquids are currently present, ≤10 micrograms PCBs per 100 square centimeters (≤10 μg/100 cm^2) as measured by a standard wipe test (§ 761.123) at locations selected in accordance with subpart P of this part.

(B) For non-porous surfaces in contact with non-liquid PCBs (including non-porous surfaces covered with a porous surface, such as paint or coating on metal), cleaning to Visual Standard No. 2, Near-White Blast Cleaned Surface Finish, of the National Association of Corrosion Engineers (NACE). A person shall verify compliance with standard No. 2 by visually inspecting all cleaned areas.

(ii) For disposal in a smelter operating in accordance with § 761.72(b):

(A) For non-porous surfaces previously in contact with liquid PCBs at any concentration, where no free-flowing liquids are currently present, <100 μg/100 cm^2 as measured by a standard wipe test (§ 761.123) at locations selected in accordance with subpart P of this part.

(B) For non-porous surfaces in contact with non-liquid PCBs (including non-porous surfaces covered with a porous surface, such as paint or coating on metal), cleaning to Visual Standard No. 3, Commercial Blast Cleaned Surface Finish, of the National Association of Corrosion Engineers (NACE). A person shall verify compliance with standard No. 3 by visually inspecting all cleaned areas.

(4) The decontamination standard for concrete is ≤10 μg/100 cm^2 as measured by a standard wipe test (§ 761.123) if the decontamination procedure is commenced within 72 hours of the initial spill of PCBs to the concrete or portion thereof being decontaminated.

(c) *Self-implementing decontamination procedures.* The following self-implementing decontamination procedures are available as an alternative to the measurement-based decontamination methods specified in paragraph (b) of this section. Any person performing self-implementing decontamination must comply with one of the following procedures.

(1) Any person decontaminating a PCB Container must do so by flushing the internal surfaces of the container three times with a solvent containing <50 ppm PCBs. Each rinse shall use a volume of the flushing solvent equal to approximately 10 percent of the PCB Container capacity.

(2) Any person decontaminating movable equipment contaminated by PCBs and used in storage areas, tools, and sampling equipment may do so by:

(i) Swabbing surfaces that have contacted PCBs with a solvent;

(ii) A double wash/rinse as defined in subpart S of this part; or

(iii) Another applicable decontamination procedure in this section.

(3) Any person decontaminating a non-porous surface in contact with free-flowing mineral oil dielectric fluid (MODEF) at levels ≤10,000 ppm PCBs must do so as follows:

(i) Drain the free-flowing MODEF and allow the residual surfaces to drain for an additional 15 hours.

(ii) Dispose of drained MODEF according to paragraph (g) of this section.

(iii) Soak the surfaces to be decontaminated in a sufficient amount of clean (containing <2 ppm PCBs) performance-based organic decontamination fluid (PODF) such that there is a minimum of 800 ml of PODF for each 100 cm^2 of contaminated or potentially contaminated surface for at least 15 hours at ≥20 °C.

(iv) Approved PODFs include:

(A) Kerosene.

(B) Diesel fuel.

(C) Terpene hydrocarbons.

(D) Mixtures of terpene hydrocarbons and terpene alcohols.

(v) Drain the PODF from the surfaces.

(vi) Dispose of the drained PODF in accordance with paragraph (g) of this section.

(4) Any person decontaminating a non-porous surface in contact with free-flowing MODEF containing >10,000 ppm PCB in MODEF or askarel PCB (up to 70 percent PCB in a mixture of trichlorobenzenes and tetrachlorobenzenes) must do so as follows:

(i) Drain the free-flowing MODEF or askarel and allow the residual surfaces to drain for an additional 15 hours.

(ii) Dispose of drained MODEF or askarel according to paragraph (g) of this section.

(iii) Soak the surfaces to be decontaminated in a sufficient amount of clean PODF (containing <2 ppm PCBs) such that there is a minimum of 800 ml of PODF for each 100 cm^2 of contaminated or potentially contaminated surface for at least 15 hours at ≥20 °C.

(iv) Approved PODFs include:

(A) Kerosene.

(B) Diesel fuel.

(C) Terpene hydrocarbons.

(D) Mixtures of terpene hydrocarbons and terpene alcohols.

(v) Drain the PODF from the surfaces.

(vi) Dispose of the drained PODF in accordance with paragraph (g) of this section.

(vii) Resoak the surfaces to be decontaminated, pursuant to paragraph (c)(3)(iii) of this section, in a sufficient amount of clean PODF (containing <2 ppm PCBs) such that there is a minimum of 800 ml of PODF for each 100 cm^2 of surface for at least 15 hours at ≥20 °C.

(viii) Drain the PODF from the surfaces.

(ix) Dispose of the drained PODF in accordance with paragraph (g) of this section.

(5) Any person decontaminating piping and air lines in an air compressor system must do so as follows:

(i) Before decontamination proceeds, disconnect or bypass the air compressors and air dryers from the piping and air lines and decontaminate the air compressors and air dryers separately in accordance with paragraphs (b), (c)(1) through (c)(6), or (c)(8) of this section. Dispose of filter media and desiccant in the air dyers based on their existing PCB concentration.

(ii) Test the connecting line and appurtenances of the system to assure that there is no leakage. Test by introducing air into the closed system at from 90 to 100 pounds per square inch (psi). Only if there is a pressure drop of <5 psi in 30 minutes may decontamination take place.

(iii) When there is no leakage, fill the piping and air lines with clean (containing <2 ppm PCBs) solvent. Solvents include PODF, aqueous potassium hydroxide at a pH between 9 and 12, or water containing 5 percent sodium hydroxide by weight.

(iv) Circulate the solvent to achieve turbulent flow through the piping and air lines in the air compressor system until the total volume of solvent circulated equals 10 times the total volume of the particular article being decontaminated, then drain the solvent. Calculate the total volume of solvent circulated by multiplying the pump rate by the time of pumping. Turbulent flow means a Reynolds number range from 20,000 to 43,000. Refill the system with clean PODF and repeat the circulation and drain process.

(6) Any person using thermal processes to decontaminate metal surfaces in contact with PCBs, as required by § 761.62(a)(6), must use one of the following options:

(i) Surfaces in contact with liquid and non-liquid PCBs at concentrations <500 ppm may be decontaminated in an industrial furnace for purposes of disposal in accordance with § 761.72.

(ii) Surfaces in contact with liquid or non-liquid PCBs at concentrations ≥500 ppm may be smelted in an industrial furnace operating in accordance with § 761.72(b), but must first be decontaminated in accordance with § 761.72(a) or to a surface concentration of <100 μg/100 cm^2.

(d) *Decontamination solvents.* (1) Unless otherwise provided in paragraphs (c)(3) through (c)(5) of this section, the solubility of PCBs in any solvent used for purposes of decontamination under this section must be 5 percent or more by weight.

(2) The solvent may be reused for decontamination so long as its PCB concentration is <50 ppm.

(3) Solvent shall be disposed of under paragraph (g) of this section.

(4) Other than as allowed in paragraphs (c)(3) and (c)(4) of this section, solvents may be tested and validated for performance-based decontamination of non-porous surfaces contaminated with MODEF or other PCB liquids, in accordance with the self-implementing procedures found in subpart T of this part. Specific conditions for the performance-based testing from this validation are determined in the validation study.

(e) *Limitation of exposure and control of releases.* (1) Any person conducting decontamination activities under this section shall take necessary measures to protect against direct release of PCBs to the environment from the decontamination area.

(2) Persons participating in decontamination activities shall wear or use protective clothing or equipment to protect against dermal contact or inhalation of PCBs or materials containing PCBs.

(f) *Sampling and recordkeeping.* (1) Confirmatory sampling is required under paragraph (b) of this section. For liquids described in paragraphs (b)(1) and (b)(2) of this section, sample in accordance with §§ 761.269 and 761.272. For non-porous surfaces and concrete described in paragraphs (b)(3) and (b)(4) of this section, sample in accordance with subpart P of this part. A written record of such sampling must be established and maintained for 3 years from the date of any decontamination under this section. The record must show sampling locations and analytical results and must be retained at the site of the decontamination or a copy of the record must be made available to EPA in a timely manner, if requested. In addition, recordkeeping is required in accordance with § 761.180(a) for all wastes generated by a decontamination process and regulated for disposal under this subpart.

(2) Confirmatory sampling is not required for self-implementing decontamination procedures under paragraph (c) of this section. Any person using these procedures must retain a written record documenting compliance with the procedures for 3 years after completion of the decontamination procedures (e.g., video recordings, photographs).

(g) *Decontamination waste and residues.* Decontamination waste and residues shall be disposed of at their existing PCB concentration unless otherwise specified.

(1) Distillation bottoms or residues and filter media are regulated for disposal as PCB remediation waste.

(2) PCBs physically separated from regulated waste during decontamination (such as by chopping, shredding, scraping, abrading or oil/water separation, as opposed to solvent rinsing and soaking), other than wastes described in paragraph (g)(1) of this section, are regulated for disposal at their original concentration.

(3) Hydrocarbon solvent used or reused for decontamination under this section that contains <50 ppm PCB must be burned and marketed in accordance with the requirements for used oil in § 761.20(e), disposed of in accordance with § 761.60(a) or (e), or decontaminated pursuant to this section.

(4) Chlorinated solvent at any PCB concentration used for decontamination under this section shall be disposed of in an incinerator operating in compliance with § 761.70, or decontaminated pursuant to this section.

(5) Solvents ≥50 ppm other than those described in paragraphs (g)(3) and (g)(4) of this section shall be disposed of in accordance with § 761.60(a) or decontaminated pursuant to this section.

(6) Non-liquid cleaning materials and personal protective equipment waste at any concentration, including non-porous surfaces and other non-liquid materials such as rags, gloves, booties, other disposable personal protective equipment, and similar materials resulting from decontamination shall be disposed of in accordance with § 761.61(a)(5)(v).

(h) *Alternative decontamination or sampling approval.* (1) Any person wishing to decontaminate material described in paragraph (a) of this section in a manner other than prescribed in paragraph (b) of this section must apply in writing to the EPA Regional Administrator in the Region where the activity would take place. Each application must describe the material to be decontaminated and the proposed decontamination method, and must demonstrate that the proposed method is capable of decontaminating the material to the applicable level set out in paragraphs (b)(1) through (b)(4) of this section.

(2) Any person wishing to decontaminate material described in paragraph (a) of this section using a self-implementing procedure other than prescribed in paragraph (c) of this section must apply in writing to the EPA Regional Administrator in the Region where the activity would take

place. Each application must describe the material to be decontaminated and the proposed self-implementing decontamination method and must include a proposed validation study to confirm performance of the method.

(3) Any person wishing to sample decontaminated material in a manner other than prescribed in paragraph (f) of this section, must apply in writing to the EPA Regional Administrator in the Region where the activity would take place. Each application must contain a description of the material to be decontaminated, the nature and PCB concentration of the contaminating material (if known), the decontamination method, the proposed sampling procedure, and a justification for how the proposed sampling is equivalent to or more comprehensive than the sampling procedure required under paragraph (f) of this section.

(4) EPA may request additional information that it believes necessary to evaluate the application.

(5) EPA will issue a written decision on each application for risk-based decontamination or sampling. No person may conduct decontamination or sampling under this paragraph prior to obtaining written approval from EPA. EPA will approve an application if it finds that the proposed decontamination or sampling method will not pose an unreasonable risk of injury to health or the environment.

s. In § 761.80, by adding paragraphs (e) and (i) to read as follows:

§ 761.80 Manufacturing, processing, and distribution in commerce exemptions.

* * * * *

(e) The Administrator grants a class exemption to all research and development (R&D) facilities for a period of 1 year to manufacture or import PCBs for use solely in the manufacturer or importer's own research for the development of PCB disposal technologies. Each person that wishes to be part of the exemption must meet the following conditions:

(1) A petition for an exemption from the PCB prohibition on manufacturing PCBs must be received by EPA 60 days prior to engaging in these activities.

(2) Requests for renewal must be filed pursuant to § 750.11 of this chapter. EPA will deem any properly filed request for the renewal of the exemption by any member of the class as a renewal request for the entire class.

(3) The quantity of the PCBs manufactured annually must not exceed 500 grams by total weight of pure PCBs. Any person who wishes to manufacture or import more than 500 grams of PCBs in 1 year must receive written approval from the Director, National Program Chemicals Division to exceed the limitations established by this provision. The Director, National Program Chemicals Division may grant approval without further rulemaking. Any increase granted will be in writing and will extend only for a maximum of the time remaining in a specific exemption year.

(4) The owner or operator of the facility must notify the EPA Regional Administrator in writing 30 days prior to the commencement of R&D activities that include the manufacture or import of PCBs under the exemption, unless the facility has obtained a PCB R&D approval from EPA pursuant to § 761.60(e), § 761.60(i)(2), § 761.70(a), or § 761.70(b) and the approval contains a provision allowing the manufacture of PCBs.

(5) Records are maintained of their PCB activities for a period of 3 years after ceasing operations. The records must include the sources and the annual amounts of PCBs received if imported and the type and annual amount of PCBs that were manufactured.

(6) All PCBs and materials containing PCBs, regardless of concentration, remaining from the disposal-related studies must be disposed of according to § 761.60(j)(1)(vi), or decontaminated pursuant to § 761.79, based on the original PCB concentration.

* * * * *

(i) The Administrator grants a class exemption to all persons who manufacture, import, process, distribute in commerce, or export PCBs, or analytical reference samples derived from PCB waste material, provided the PCBs are manufactured, imported, processed, distributed in commerce, or exported solely for the purpose of R&D and the following conditions are met:

(1) Notification in the form of a petition for an exemption from the PCB prohibitions on manufacture, import, processing, distribution in commerce, or export is received by EPA 60 days prior to engaging in these activities.

(2) Requests for renewal are filed pursuant to §§ 750.11 and 750.31 of this chapter. EPA will deem any properly filed request for the renewal of the exemption by any member of the class as a renewal request for the entire class.

(3) The PCBs are packaged in one or more hermetically sealed containers of a volume of no more than 5.0 ml each. Analytical reference samples derived from PCB waste material may be packaged in a container larger than 5.0 ml when packaged pursuant to applicable DOT performance standards.

(4) The quantity of PCBs manufactured, imported, processed, distributed in commerce, or exported annually must not exceed 500 grams by total weight of pure PCBs. Any person who expects to manufacture, import, process, distribute in commerce, or export more than 500 grams of PCBs in 1 year or to exceed the 5.0 ml packaging requirement must obtain a written approval from the Director, National Program Chemicals Division and must identify the sites of PCB activities and the quantity of PCBs to be manufactured, imported, processed, distributed in commerce, or exported. Each request must include a justification. The Director, National Program Chemicals Division, may grant approval without further rulemaking. Any increase granted will be in writing and will extend only for a maximum of the time remaining in a specific exemption year.

(5) All treated and untreated PCB regulated material and material coming into contact with regulated material must be stored and disposed of according to subpart D of this part, or decontaminated pursuant to § 761.79.

(6) All PCB materials must be distributed in DOT-authorized packaging.

(7) Records are maintained of their PCB activities for a period of 3 years after ceasing operations. The records must include the sources and the annual amounts of PCBs received if imported, the annual amount of PCBs that were manufactured, the annual amount of PCBs that were processed and/or distributed in commerce (to include export), and the persons to whom the PCBs were shipped.

* * * * *

t. By revising § 761.93 to read as follows:

§ 761.93 Import for disposal.

(a) *General provisions*. No person may import PCBs or PCB Items for disposal without an exemption issued under the authority of TSCA section 6(e)(3).

(b) [Reserved]

u. By revising § 761.97(a)(1) and (a)(2) to read as follows:

§ 761.97 Export for disposal.

(a) * * *

(1) PCBs and PCB Items at concentrations <50 ppm (or <10 μg PCB/100 cm^2 if no free-flowing liquids are present) may be exported for disposal.

(2) For the purposes of this section, PCBs and PCB Items of unknown concentrations shall be treated as if they contain ≥50 ppm.

* * * * *

v. By adding § 761.99 to subpart F to read as follows:

§ 761.99 Other transboundary shipments.

For purposes of this subpart, the following transboundary shipments are not considered exports or imports:

(a) PCB waste generated in the United States, transported outside the Customs Territory of the United States (including any residuals resulting from cleanup of spills of such wastes in transit) through another country or its territorial waters, or through international waters, and returned to the United States for disposal.

(b) PCB waste in transit, including any residuals resulting from cleanup of spills during transit, through the United States (e.g., from Mexico to Canada, from Canada to Mexico).

w. Section 761.125 is amended by revising the second sentence of the introductory text of paragraph (a)(1) and in paragraphs (a)(2) and (c)(4)(i) by revising the reference to ''§ 761.60'' to read ''subpart D of this part'', to read as follows:

§ 761.125 Requirements for PCB spill cleanup.

(a) * * *

(1) * * * For example, under the National Contingency Plan all spills involving 1 pound or more by weight of PCBs must currently be reported to the National Response Center (1-800-424-8802). * * *

* * * * *

§ 761.180 [Amended]

x. In § 761.180:

i. By revising the phrase in paragraph (e)(1) to ''§ 761.60(a)(2)(iii)(A)(*8*) and § 761.60(a)(3)(iii)(A)(*8*)'' to read ''§ 761.71(a)(1)(viii) and § 761.71(b)(1)(viii)''.

ii. By revising the phrase in paragraph (e)(2) to ''§ 761.60(a)(2)(iii)(A)(*7*) and § 761.60(a)(3)(iii)(A)(*7*)'' to read ''§ 761.71(a)(1)(vii) and § 761.71(b)(1)(vii)''.

iii. By revising the reference in paragraph (e)(3) to ''§ 761.60(a)(3)(iii)(B)(*6*)'' to read ''§ 761.71(b)(2)(vi)''.

iv. By adding paragraphs (a)(1)(iii), (a)(2)(ix), (a)(3), (a)(4), (b)(1)(iii), and (b)(5), and by revising the introductory text of paragraph (b)(3).

The revisions and additions read as follows:

§ 761.180 Records and monitoring.

* * * * *

(a) * * *

(1) * * *

(iii) Records of inspections and cleanups performed in accordance with § 761.65(c)(5).

(2) * * *

(ix) Whenever a PCB Item, excluding small capacitors, with a concentration of ≥50 ppm is distributed in commerce for reuse pursuant to § 761.20(c)(1), the name, address, and telephone number of the person to whom the item was transferred, date of transfer, and the serial number of the item or the internal identification number, if a serial number is not available, must be recorded in the annual document log. The serial number or internal identification number shall be permanently marked on the equipment.

(3) [Reserved]

(4) For purposes of this paragraph, PCB Voltage Regulators shall be recorded as PCB Transformers.

(b) * * *

(1) * * *

(iii) Records of inspections and cleanups performed in accordance with § 761.65(c)(5).

* * * * *

(3) The owner or operator of a PCB disposal facility (including an owner or operator who disposes of his/her own waste and does not receive or generate manifests) or a commercial storage facility shall submit an annual report, which briefly summarizes the records and annual document log required to be maintained and prepared under paragraphs (b)(1) and (b)(2) of this section to the EPA Regional Administrator of the Region in which the facility is located by July 15 of each year, beginning with July 15, 1991. The first annual report submitted on July 15, 1991, shall be for the period starting February 5, 1990, and ending December 31, 1990. The annual report shall contain no confidential business information. The annual report shall consist of the information listed in paragraphs (b)(3)(i) through (b)(3)(vi) of this section.

* * * * *

(5) For purposes of this paragraph, PCB Voltage Regulators shall be recorded and reported as PCB Transformers.

* * * * *

y. In § 761.205, by adding paragraph (f) to read as follows:

§ 761.205 Notification of PCB waste activity (EPA Form 7710-53).

* * * * *

(f) When a facility has previously notified EPA of its PCB waste handling activities using EPA Form 7710-53 and those activities change, the facility must resubmit EPA Form 7710-53 to reflect those changes no later than 30 days from when a change is made. Examples of when a PCB waste handler must renotify the Agency include, but are not limited to the following: the company changes location of the facility; or the company had notified solely as engaging in a certain type of PCB waste handling activity and now wishes to engage in another PCB waste activity (e.g., previously only commercially stored PCB waste and now wishes to transport PCB waste).

z. In § 761.207, by revising paragraph (j) to read as follows:

§ 761.207 The manifest—general requirements.

* * * * *

(j) The requirements of this section apply only to PCB wastes as defined in § 761.3. This includes PCB wastes with PCB concentrations below 50 ppm where the PCB concentration below 50 ppm was the result of dilution; these PCB wastes are required under § 761.1(b) to be managed as if they contained PCB concentrations of 50 ppm and above. An example of such a PCB waste is spill cleanup material containing <50 ppm PCBs when the spill involved material containing PCBs at a concentration of ≥50 ppm. However, there is no manifest requirement for material currently below 50 ppm which derives from pre-April 18, 1978, spills of any concentration, pre-July 2, 1979, spills of < 500 ppm PCBs, or materials decontaminated in accordance with § 761.79.

aa. In § 761.215, by revising the introductory text of paragraphs (b), (c), and (d), and adding paragraph (f) to read as follows:

§ 761.215 Exception reporting.

* * * * *

(b) A generator of PCB waste subject to the manifesting requirements shall submit an Exception Report to the EPA Regional Administrator for the Region in which the generator is located if the generator has not received a copy of the manifest with the hand written signature of the owner or operator of the designated facility within 45 days of the date the waste was accepted by the initial transporter. The exception report shall be submitted to EPA no later than 45 days from the date on which the generator should have received the manifest. The Exception Report shall include the following:

* * * * *

(c) A disposer of PCB waste shall submit a One-year Exception Report to the EPA Regional Administrator for the Region in which the disposal facility is located no later than 45 days from the end of the 1-year storage for disposal date when the following occurs:

* * * * *

(d) A generator or commercial storer of PCB waste who manifests PCBs or PCB Items to a disposer of PCB waste shall submit a One-year Exception

Report to the EPA Regional Administrator for the Region in which the generator or commercial storer is located no later than 45 days from the date the following occurs:

* * * * *

(f) PCB/radioactive waste that is exempt from the 1-year storage for disposal time limit pursuant to § 761.65(a)(1) is also exempt from the exception reporting requirements of paragraphs (c), (d), and (e) of this section.

bb. In § 761.218, by revising paragraph (b) to read as follows:

§ 761.218 Certificate of disposal.

* * * * *

(b) The owner or operator of the disposal facility shall send the Certificate of Disposal to the generator identified on the manifest which accompanied the shipment of PCB waste within 30 days of the date that disposal of each item of PCB waste identified on the manifest was completed unless the generator and the disposer contractually agree to another time frame.

* * * * *

cc. By adding subparts L, M, N, O, P, Q, R, S, and T to read as follows:

Subpart L—[Reserved]

Subpart M—Determining a PCB Concentration for Purposes of Abandonment or Disposal of Natural Gas Pipeline: Selecting Sample Sites, Collecting Surface Samples, and Analyzing Standard PCB Wipe Samples

Sec.

761.240 Scope and definitions.
761.243 Standard wipe sample method and size.
761.247 Sample site selection for pipe segment removal or pipeline section abandonment.
761.250 Sample site selection for pipeline section abandonment.
761.253 Chemical analysis.
761.257 Determining the regulatory status of sampled pipe.

Subpart N—Cleanup Site Characterization Sampling for PCB Remediation Waste in Accordance with § 761.61(a)(2)

Sec.

761.260 Applicability.
761.265 Sampling bulk PCB remediation waste and porous surfaces.
761.267 Sampling non-porous surfaces.
761.269 Sampling liquid PCB remediation waste.
761.272 Chemical extraction and analysis of samples.
761.274 Reporting PCB concentrations in samples.

Subpart O—Sampling to Verify Completion of Self-Implementing Cleanup and On-Site Disposal of Bulk PCB Remediation Waste and Porous Surfaces in Accordance with § 761.61(a)(6)

Sec.

761.280 Application and scope.
761.283 Determination of the number of samples to collect and sample collection locations.
761.286 Sample size and procedure for collecting a sample.
761.289 Compositing samples.
761.292 Chemical extraction and analysis of individual samples and composite samples.
761.295 Reporting and recordkeeping of the PCB concentrations in samples.
761.298 Decisions based on PCB concentration measurements resulting from sampling.

Subpart P—Sampling Non-Porous Surfaces for Measurement-Based Use, Reuse, and On-Site or Off-Site Disposal under § 761.61(a)(6) and Determination under § 761.79(b)(3)

Sec.

761.300 Applicability.
761.302 Proportion of the total surface area to sample.
761.304 Determining sample location.
761.306 Sampling 1 meter square surfaces by random selection of halves.
761.308 Sample selection by random number generation on any two-dimensional square grid.
761.310 Collecting the sample.
761.312 Compositing of samples.
761.314 Chemical analysis of standard wipe test samples.
761.316 Interpreting PCB concentration measurements resulting from this sampling scheme.

Subpart Q—Self-Implementing Alternative Extraction and Chemical Analysis Procedures for Non-liquid PCB Remediation Waste Samples

Sec.

761.320 Applicability.
761.323 Sample preparation.
761.326 Conducting the comparison study.

Subpart R—Sampling Non-Liquid, Non-Metal PCB Bulk Product Waste for Purposes of Characterization for PCB Disposal in Accordance With § 761.62, and Sampling PCB Remediation Waste Destined for Off-Site Disposal, in Accordance With § 761.61

Sec.

761.340 Applicability.
761.345 Form of the waste to be sampled.
761.346 Three levels of sampling.
761.347 First level sampling—waste from existing piles.
761.348 Contemporaneous sampling.
761.350 Subsampling from composite samples.
761.353 Second level of sample selection.
761.355 Third level of sample selection.
761.356 Conducting a leach test.
761.357 Reporting the results of the procedure used to simulate leachate generation.
761.358 Determining the PCB concentration of samples of waste.
761.359 Reporting the PCB concentrations in samples.

Subpart S—Double Wash/Rinse Method for Decontaminating Non-Porous Surfaces

Sec.

761.360 Background.
761.363 Applicability.
761.366 Cleanup equipment.
761.369 Pre-cleaning the surface.
761.372 Specific requirements for relatively clean surfaces.
761.375 Specific requirements for surfaces coated or covered with dust, dirt, grime, grease, or another absorbent material.
761.378 Decontamination, reuse, and disposal of solvents, cleaners, and equipment.

Subpart T—Comparison Study for Validating a New Performance-Based Decontamination Solvent under § 761.79(d)(4)

Sec.

761.380 Background.
761.383 Applicability.
761.386 Required experimental conditions for the validation study and subsequent use during decontamination.
761.389 Testing parameter requirements.
761.392 Preparing validation study samples.
761.395 A validation study.
761.398 Reporting and recordkeeping.

Subpart L [Reserved]

Subpart M—Determining a PCB Concentration for Purposes of Abandonment or Disposal of Natural Gas Pipeline: Selecting Sample Sites, Collecting Surface Samples, and Analyzing Standard PCB Wipe Samples

§ 761.240 Scope and definitions.

(a) Use these procedures to select surface sampling sites for natural gas pipe to determine its PCB surface concentration for abandonment-in-place or removal and disposal off-site in accordance with § 761.60(b)(5).

(b) ''Pipe segment'' means a length of natural gas pipe that has been removed from the pipeline system to be disposed of or reused, and that is usually approximately 12.2 meters (40 feet) or shorter in length. Pipe segments are usually linear.

(c) ''Pipeline section'' means a length of natural gas pipe that has been cut or otherwise separated from the active pipeline, usually for purposes of abandonment, and that is usually longer than 12.2 meters in length. Pipeline sections may be branched.

§ 761.243 Standard wipe sample method and size.

(a) Collect a surface sample from a natural gas pipe segment or pipeline

section using a standard wipe test as defined in § 761.123. Detailed guidance for the entire wipe sampling process appears in the document entitled ''Wipe Sampling and Double Wash/Rinse Cleanup as Recommended by the Environmental Protection Agency PCB Spill Cleanup Policy,'' dated June 23, 1987 and revised on April 18, 1991. This document is available from the TSCA Assistance Information Service, Environmental Protection Agency, 401 M St., SW., Washington, DC 20460.

(b) Collect a surface sample from a minimum surface area of 100 cm^2 at each sampling site selected. The EPA Regional Administrator may approve, in writing, requests to collect a sample from smaller surface areas, when <100 cm^2 of surface eligible for sampling is present; e.g., when sampling a small diameter pipe, a small valve, or a small regulator. When smaller surfaces are sampled, convert the measurement to the equivalent measurement for 100 cm^2 for purposes of comparison to standards based on 100 cm^2.

§ 761.247 Sample site selection for pipe segment removal or pipeline section abandonment.

(a) *General.* (1) Select the pipe segments to be sampled by following the directions in paragraph (b) of this section.

(2) Locate the proper position along the length of the pipe segment that you have selected for sampling, by following the directions in paragraph (c) of this section.

(3) Select the proper sampling position around the circumference of the pipe segment or pipeline section that you have selected for sampling, by following the directions in paragraph (d) of this section.

(4) Prior to removing pipe from the ground or lifting the pipe from its location during former operations, mark the top side of the pipe.

(5) Do not sample if there are free-flowing liquids in the pipe segment. Free-flowing liquids must be removed prior to sampling.

(b) *Selecting pipe segments to sample.* Select the pipe segment(s) that you will sample from a length of pipe or group of pipe segments, as follows:

(1) Do not sample a pipe segment that is longer than 12.2 meters (40 feet). If a segment is longer than 12.2 meters in length, cut the segment so that all resulting segments are 12.2 meters or less in length.

(2) Determine which pipe segments to sample as follows:

(i) When a length of pipe having seven or fewer segments is removed for purposes of disposal, sample each pipe segment.

(ii) When removing a length of pipe having multiple contiguous segments less than 3 miles in total length, take samples from a total of seven segments.

(A) Sample the first and last segments removed.

(B) Select the five additional segments according to one of the two following procedures:

(*1*) Assign all segments a unique sequential number. Then select five numbers using a random number table or random number generator. If the random number generator or random number table produces either the first pipe segment, the last pipe segment, or any previously selected segment, select another random number until there are seven different numbers, each corresponding to a different pipe segment.

(*2*) Divide the total number of segments by six. Round the resulting quotient off to the nearest whole number. The resulting number is the interval between the segments you will sample. For example, cut a 2.9 mile section of pipeline into 383 segments of approximately 40 feet each. Sample the first (number 1) and last (number 383) segments. To determine which additional five segments to sample, divide the total number of segments, 383, by 6. Round up the resulting number in this example, 63.8, to the next whole number, 64. Add 64 to the number of each preceding pipe segment five separate times to select five additional pipe segments for sampling. In this example, the first pipe segment has the number 1, add 64 to 1 to select segment 65. Next, add 64 to 65 to select segment 129. Continue in this fashion to select all seven segments: 1, 65, 129, 193, 257, 321, and 383.

(iii) When removing a length of pipe having multiple contiguous segments more than 3 miles in total length for purposes of disposal, take samples of each segment that is ½ mile distant from the segment previously sampled. Sample a minimum of seven segments.

(c) *Selecting the sampling position—length.* Select the sampling position along the length of the pipeline section or pipe segment, as follows:

(1) Take samples at the end upstream of the former gas flow of each segment removed.

(2) If the pipe segment is cut with a torch or other high temperature heat source, take the sample at least 15 cm (6 inches) inside the cut end of the pipe segment.

(3) If the pipe segment is cut with a saw or other mechanical device, take the sample at least 2 cm (1 inch) inside the end of the pipe segment.

(4) If the sample site location selected in the procedure at paragraph (c)(2) or (c)(3) of this section is a porous surface (for example, there is significant corrosion so that the wipe material will be shredded), then move the sample site further inside the pipe segment (away from the end of the pipe or pipe segment) until there is no such porous surface. For purposes of this subpart, natural gas pipe with a thin porous corrosion preventive coating is a non-porous surface.

(5) If there is not a non-porous surface accessible by paragraphs (c)(2) and (c)(3) of this section, use one of the following three options:

(i) Sample the downstream end of the pipe segment using the same sample site location procedure as for the upstream end.

(ii) Select another pipe segment using the random selection procedure described in paragraph (b) of this section.

(iii) If there is no other pipeline section or pipe segment in the population to be sampled and both ends of a pipe segment have porous surfaces at all possible sample collection sites, then assume that the pipe segment contains ≥50 ppm PCB but <500 ppm PCB.

(d) *Selecting the sample position—circumference.* Based on the mark on the top of the pipe segment made prior to removing pipe from the ground or lifting the pipe from its location during former operations, sample the inside center of the bottom of the pipe being sampled. Make sure the sample is centered on the bottom of the pipeline section or pipe segment; that is, sample an equal area on both sides of the middle of the bottom of the pipeline section or pipe segment for the entire length of the sample.

§ 761.250 Sample site selection for pipeline section abandonment.

This procedure is for the sample site selection for a pipeline section to be abandoned, in accordance with § 761.60(b)(5)(i)(B).

(a) *General.* (1) Select sample collection sites in the pipeline section(s) by following the directions in paragraph (b) of this section.

(2) Select the proper sampling position along the pipe by following the directions in § 761.247(d).

(3) Assure, by visual inspection, the absence of free-flowing liquids in the pipe by affirming no liquids at all liquid collection points and all ends of the pipeline section to be abandoned.

(b) *Selection sample collection sites.* At a minimum, sample all ends of all pipeline sections to be abandoned in place.

(1) If the pipeline section to be abandoned is between the pressure side of one compressor station and the suction side of the next compressor station downstream of the former gas flow, at a minimum, sample all ends of the abandoned pipe.

(2) If the pipeline section to be abandoned is longer than the distance between the pressure side of one compressor station and the suction side of the next compressor station downstream of the former gas flow, divide the pipeline section, for purposes of sampling, into smaller pipeline sections no longer than the distance from the pressure side of one compressor station to the suction side of the next compressor station downstream of the former gas flow. Consider each of the smaller sections to be a separate abandonment and sample each one, at a minimum, at all ends.

(3) Use the following procedure to locate representative sample collection sites in pipeline sections at points other than the suction and pressure side of compressor stations, or the ends of the pipeline section to be abandoned.

(i) First, assign a unique identifying sequential number to each kilometer or fraction of a kilometer length of pipe within the entire pipeline section.

(ii) Use a random number table or a random number generator to select each representative sample collection site from a complete list of the sequential identification numbers.

(iii) Samples may be collected by removing any covering soil, cutting the pipe to gain access to the sampling location, and collecting the surface sample with the pipe in place, rather than completely removing the pipeline sections to collect the surface sample.

§ 761.253 Chemical analysis.

(a) Extract PCBs from the standard wipe sample collection medium and clean-up the extracted PCBs in accordance with either Method 3500B/3540C or Method 3500B/3550B from EPA's SW-846, Test Methods for Evaluating Solid Waste, or a method validated under subpart Q of this part. Use Method 8082 from SW-846, or a method validated under subpart Q of this part, to analyze these extracts for PCBs.

(b) Report all PCB sample concentrations in µg/100 cm^2 (16 square inches) of surface sampled. If sampling an area smaller than 100 cm^2, report converted sample concentrations in accordance with § 761.243(b).

§ 761.257 Determining the regulatory status of sampled pipe.

(a) For purposes of removal for disposal of a pipe segment that has been sampled, the sample results for that segment determines its PCB surface concentration. Determine the PCB surface concentration of a segment which was not sampled as follows:

(1) If the unsampled pipe segment is between two pipe segments which have been sampled, assume that the unsampled segment has the same PCB surface concentration as the nearest sampled pipe segment.

(2) If an unsampled pipe segment is equidistant between two pipe segments which have been sampled, assume the PCB surface concentration of the unsampled segment to be the arithmetic mean of the PCB surface concentrations measured in the two equidistant, sampled, pipe segments.

(b) For purposes of abandonment of a pipeline section, assume that the PCB surface concentration for an entire pipeline section is the arithmetic mean of the PCB surface concentrations measured at the ends of the pipeline section. If additional representative samples were taken in a pipeline section, assume that the PCB surface concentration for the entire pipeline section is the arithmetic mean of the concentrations measured in all representative samples taken.

(c) For purposes of removal for disposal under § 761.60(b)(5)(ii)(A)(*1*) or abandonment under § 761.60(b)(5)(i)(B), if the surface PCB concentration of a pipe segment, determined by direct measurement or in accordance with paragraph (a) of this section, or of a pipeline section as determined in accordance with paragraph (b) of this section, is >10 µg/100 cm^2, but <100 µg/100 cm^2, then that segment or section is PCB-Contaminated.

Subpart N—Cleanup Site Characterization Sampling for PCB Remediation Waste in Accordance with § 761.61(a)(2)

§ 761.260 Applicability.

This subpart provides a method for collecting new data for characterizing a PCB remediation waste cleanup site or for assessing the sufficiency of existing site characterization data, as required by § 761.61(a)(2).

§ 761.265 Sampling bulk PCB remediation waste and porous surfaces.

(a) Use a grid interval of 3 meters and the procedures in §§ 761.283 and 761.286 to sample bulk PCB remediation waste that is not in a container and porous surfaces.

(b) Use the following procedures to sample bulk PCB remediation waste that is in a single container.

(1) Use a core sampler to collect a minimum of one core sample for the entire depth of the waste at the center of the container. Collect a minimum of 50 cm^3 of waste for analysis.

(2) If more than one core sample is taken, thoroughly mix all samples into a composite sample. Take a subsample of a minimum of 50 cm^3 from the mixed composite for analysis.

(c) Use the following procedures to sample bulk PCB remediation waste that is in more than one container.

(1) Segregate the containers by type (for example, a 55-gallon drum and a roll-off container are types of containers).

(2) For fewer than three containers of the same type, sample all containers.

(3) For more than three containers of the same type, list the containers and assign each container an unique sequential number. Use a random number generator or table to select a minimum of 10 percent of the containers from the list, or select three containers, whichever is the larger.

(4) Sample the selected container(s) according to paragraph (b) of this section.

§ 761.267 Sampling non-porous surfaces.

(a) Sample large, nearly flat, non-porous surfaces by dividing the surface into roughly square portions approximately 2 meters on each side. Follow the procedures in § 761.302(a).

(b) It is not necessary to sample small or irregularly shaped surfaces.

§ 761.269 Sampling liquid PCB remediation waste.

(a) If the liquid is single phase, collect and analyze one sample. There are no required procedures for collecting a sample.

(b) If the liquid is multi-phasic, separate the phases, and collect and analyze a sample from each liquid phase. There are no required procedures for collecting a sample from each single phase liquid.

(c) If the liquid has a non-liquid phase which is >0.5 percent by total weight of the waste, separate the non-liquid phase from the liquid phase and sample it separately as a non-liquid in accordance with § 761.265.

§ 761.272 Chemical extraction and analysis of samples.

Use either Method 3500B/3540C or Method 3500B/3550B from EPA's SW-846, Test Methods for Evaluating Solid Waste, or a method validated under subpart Q of this part, for chemical

extraction of PCBs from individual and composite samples of PCB remediation waste. Use Method 8082 from SW-846, or a method validated under subpart Q of this part, to analyze these extracts for PCBs.

§ 761.274 Reporting PCB concentrations in samples.

(a) Report all sample concentrations for non-liquid PCBs on a dry weight basis as micrograms of PCBs per gram of sample (ppm by weight). Report surface sampling results as µg/100 cm^2. Divide 100 cm^2 by the surface area and multiply this quotient by the total number of micrograms of PCBs on the surface to obtain the equivalent measurement of micrograms per 100 cm^2.

(b) Report all sample concentrations for liquid PCBs on a wet weight basis as micrograms of PCBs per gram of sample (ppm by weight).

Subpart O—Sampling to Verify Completion of Self-Implementing Cleanup and On-Site Disposal of Bulk PCB Remediation Waste and Porous Surfaces in Accordance with § 761.61(a)(6)

§ 761.280 Application and scope.

Follow the procedures in this subpart when sampling to verify completion of the cleanup for self-implementing, on-site disposal of bulk PCB remediation waste and porous surfaces consistent with the levels of § 761.61(a)(4)(i) and (iii). The objective of this subpart is not to search for new contamination. Confirmation of compliance with the cleanup levels in § 761.61(a)(4) is only verifiable for the area sampled in accordance with this subpart. Do not make conclusions or extrapolations about PCB concentrations outside of the area which has been cleaned up and verified based on the results of this verification sampling.

§ 761.283 Determination of the number of samples to collect and sample collection locations.

This section addresses how to determine the number of samples to collect and sample collection locations for bulk PCB remediation waste and porous surfaces destined to remain at a cleanup site after cleanup.

(a) *Minimum number of samples.* (1) At each separate cleanup site at a PCB remediation waste location, take a minimum of three samples for each type of bulk PCB remediation waste or porous surface at the cleanup site, regardless of the amount of each type of waste that is present. There is no upper limit to the number of samples required or allowed.

(2) This is an example of how to calculate the minimum number of required samples at a PCB remediation waste location. There are three distinct cleanup sites at this example location: a loading dock, a transformer storage lot, and a disposal pit. The minimum number of samples to take appears in parentheses after each type of waste for each cleanup site. The PCB remediation wastes present at the loading dock are concrete (three samples) and clay soil (three samples). The non-liquid PCB remediation wastes present at the transformer storage lot are oily soil (three samples), clay soil (three samples) and gravel (three samples). The PCB remediation wastes present at the disposal pit are sandy soil (three samples), clay soil (three samples), oily soil (three samples), industrial sludge (three samples), and gravel (three samples).

(b) *Selection of sample locations--general.* (1)(i) Use a square-based grid system to overlay the entire area to be sampled. Orient the grid axes on a magnetic north-south line centered in the area and an east-west axis perpendicular to the magnetic north-south axis also centered in the area.

(ii) If the site is recleaned based on the results of cleanup verification conducted in accordance with § 761.61(a)(6), follow the procedures in paragraph (b) of this section for locating sampling points after the recleaning, but reorient the grid axes established in paragraph (b)(1)(i) of this section by moving the origin one meter in the direction of magnetic north and one meter in the direction east of magnetic north.

(2) Mark out a series of sampling points 1.5 meters apart oriented to the grid axes. The sampling points shall proceed in every direction to the extent sufficient to result in a two-dimensional grid completely overlaying the sampling area.

(3) Collect a sample at each point if the grid falls in the cleanup area. Analyze all samples either individually or according to the compositing schemes provided in the procedures at § 761.289. So long as every sample collected at a grid point is analyzed as either an individual sample or as part of a composite sample, there are no other restrictions on how many samples are analyzed.

(c) *Selection of sample locations--small cleanup sites.* When a cleanup site is sufficiently small or irregularly shaped that a square grid with a grid interval of 1.5 meters will not result in a minimum of three sampling points for each type of bulk PCB remediation waste or porous surface at the cleanup site, there are two options.

(1) Use a smaller square grid interval and the procedures in paragraph (b) of this section.

(2) Use the following coordinate-based random sampling scheme. If the site is recleaned based on the results of cleanup verification conducted in accordance with § 761.61(a)(6), follow the procedures in this section for locating sampling points after the recleaning, but select three new pairs of sampling coordinates.

(i) Beginning in the southwest corner (lower left when facing magnetic north) of the area to be sampled, measure in centimeters (or inches) the maximum magnetic north-south dimension of the area to be sampled. Next, beginning in the southwest corner, measure in centimeters (or inches) the maximum magnetic east-west dimension of the area to be sampled. Designate the north-south and east-west dimensions (describing the west and south boundaries, respectively, of the area to be sampled), as the reference axes of a square-based grid system.

(ii) Use a random number table or random number generator to select a pair of coordinates that will locate the sample within the area to be sampled. The first coordinate in the pair is the measurement on the north-south axis. The second coordinate in the pair is the measurement on the east-west axis. Collect the sample at the intersection of an east-west line drawn through the measured spot on the north-south axis, and a north-south line drawn through the measured spot on the east-west axis. If the cleanup site is irregularly shaped and this intersection falls outside the cleanup site, select a new pair of sampling coordinates. Continue to select pairs of sampling coordinates until three are selected for each type of bulk PCB remediation waste or porous surface at the cleanup site.

(d) *Area of inference.* Analytical results for an individual sample point apply to the sample point and to an area of inference extending to four imaginary lines parallel to the grid axes and one half grid interval distant from the sample point in four different directions. The area of inference forms a square around the sample point. The sides of the square are parallel to the grid axes and one grid interval in length. The sample point is in the center of the square area of inference. The area of inference from a composite sample is the total of the areas of the individual samples included in the composite.

§ 761.286 Sample size and procedure for collecting a sample.

At each selected sampling location for bulk PCB remediation waste or porous surfaces, collect at least 20 milliliters of waste, or a portion of sufficient weight for the chemical analyst to measure the concentration of PCBs and still have sufficient analytical detection sensitivity to reproducibly measure PCBs at the levels designated in § 761.61(a)(4). Use a core sampler having a diameter ≥2 cm and ≤3 cm. Collect waste to a maximum depth of 7.5 cms.

§ 761.289 Compositing samples.

Compositing is a method of combining several samples of a specific type of bulk PCB remediation waste or porous surface from nearby locations for a single chemical analysis. There are two procedures for compositing bulk PCB remediation waste samples. These procedures are based on the method for selecting sampling site locations in § 761.283(b) and (c). The single chemical analysis of a composite sample results in an averaging of the concentrations of its component samples. The area of inference of a composite is determined by the area of inference of each of its component samples as described in § 761.283(d). Compositing is not mandatory. However, if compositing is used, it must be performed in accordance with the following procedures.

(a) *Compositing in the field or in a laboratory*. Compositing may occur either in the field or in a laboratory. Prepare composite samples using equal volumes of each constituent or component sample. Composited samples must be from the same type of bulk PCB remediation waste or porous surface (see the example at § 761.283(a)(2)). Mix composite samples thoroughly. From each well-mixed composite sample, take a portion of sufficient weight for the chemical analyst to measure the concentration of PCBs and still have sufficient analytical detection sensitivity to reproducibly measure PCBs at the levels designated in § 761.61(a)(4).

(b)(1) *Compositing from samples collected at grid points in accordance with § 761.283(b).* There are two kinds of composite sampling procedures depending on the original source of contamination of the site.

(i) The first procedure is for sites with multiple point sources of contamination (such as an old electrical equipment storage area, a scrap yard, or repair shop) or for unknown sources of contamination. Under this compositing scheme, composite a maximum of nine samples for each type of bulk PCB remediation waste or porous surface at the cleanup site. The maximum dimensions of the area enclosing a nine grid point composite is two grid intervals bounded by three collinear grid points (3.0 meters or approximately 10 feet long). Take all samples in the composite at the same depth. Assure that composite sample areas and individually analyzed samples completely overlay the cleanup site.

(ii) The second procedure is for a single point source of contamination, such as discharge into a large containment area (e.g., pit, waste lagoon, or evaporation pond), or a leak onto soil from a single drum or tank. Single point source contamination may be from a one-time or continuous contamination. Composites come from two stages: an initial compositing area centered in the area to be sampled, and subsequent compositing areas forming concentric square zones around the initial compositing area. The center of the initial compositing area and each of the subsequent compositing areas is the origin of the grid axes.

(A) *Definition of the initial compositing area.* The initial compositing area is based on a square that contains nine grid points, is centered on the grid origin, and has sides two grid intervals long. The initial compositing area has the same center as this square and sides one half a grid interval more distant from the center than the square. The initial compositing area has sides three grid intervals long.

(B) *Definition of subsequent compositing areas.* Subsequent composite sampling areas are in concentric square zones one grid interval wide around the initial compositing area and around each successive subsequent compositing area. The inner boundary of the first subsequent compositing area is the outer boundary of the initial compositing area. The outer boundary of the first subsequent compositing area is centered on the grid origin, has sides one grid interval more distant from the grid origin than the inner boundary, and is two grid intervals longer on a side than the inner boundary. The inner boundary of each further subsequent compositing area is the outer boundary of the previous subsequent compositing area. The outer boundary of each further subsequent compositing area is centered on the grid origin, has sides one grid interval more distant from the grid origin than the inner boundary, and is two grid intervals longer on a side than the inner boundary.

(C) *Taking composite samples from the initial and subsequent compositing areas.* (*1*) Select composite sampling areas from the initial compositing area and subsequent compositing areas such that all grid points in the initial compositing area and subsequent compositing areas are part of a composite or individual sample.

(*2*) A person may include in a single composite sample a maximum of all nine grid points in the initial compositing area. The maximum number of grid points in a composite sample taken from a subsequent compositing area is eight. These eight grid points must be adjacent to one another in the subsequent compositing area, but need not be collinear.

(2) *Compositing from samples taken at grid points or pairs of coordinates in accordance with § 761.283(c).* Samples collected at small sites are based on selecting pairs of coordinates or using the sample site selection procedure for grid sampling with a smaller grid interval.

(i) *Samples collected from a grid having a smaller grid interval.* Use the procedure in paragraph (b)(1)(i) of this section to composite samples and determine the area of inference for composite samples.

(ii) *Samples collected from pairs of coordinates.* All three samples must be composited. The area of inference for the composite is the entire area sampled.

§ 761.292 Chemical extraction and analysis of individual samples and composite samples.

Use either Method 3500B/3540C or Method 3500B/3550B from EPA's SW-846, Test Methods for Evaluating Solid Waste, or a method validated under subpart Q of this part, for chemical extraction of PCBs from individual and composite samples of PCB remediation waste. Use Method 8082 from SW-846, or a method validated under subpart Q of this part, to analyze these extracts for PCBs.

§ 761.295 Reporting and recordkeeping of the PCB concentrations in samples.

(a) Report all sample concentrations for bulk PCB remediation waste and porous surfaces on a dry weight basis and as micrograms of PCBs per gram of sample (ppm by weight).

(b) Record and keep on file for 3 years the PCB concentration for each sample or composite sample.

§ 761.298 Decisions based on PCB concentration measurements resulting from sampling.

(a) For grid samples which are chemically analyzed individually, the PCB concentration applies to the area of inference as described in § 761.283(d).

(b) For grid samples analyzed as part of a composite sample, the PCB concentration applies to the area of inference of the composite sample as described in § 761.283(d) (i.e., the area of inference is the total of the areas of the individual samples included in the composite).

(c) For coordinate pair samples analyzed as part of a composite sample, in accordance with §§ 761.283(c)(2) and 761.289(b)(2)(ii), the PCB concentration applies to the entire cleanup site.

Subpart P—Sampling Non-Porous Surfaces for Measurement-Based Use, Reuse, and On-Site or Off-Site Disposal under § 761.61(a)(6) and Decontamination under § 761.79(b)(3)

§ 761.300 Applicability.

This subpart provides sample site selection procedures for large, nearly flat non-porous surfaces, and for small or irregularly shaped non-porous surfaces. This subpart also provides procedures for analyzing the samples and interpreting the results of the sampling. Any person verifying completion of self-implementing cleanup and on-site disposal of non-porous surfaces under § 761.61(a)(6), or verifying that decontamination standards under § 761.79(b)(3) are met, must use these procedures.

§ 761.302 Proportion of the total surface area to sample.

(a) *Large nearly flat surfaces*. Divide the entire surface into approximately 1 meter square portions and mark the portions so that they are clearly identified. Determine the sample location in each portion as directed in § 761.304.

(1) For large nearly flat surfaces contaminated by a single source of PCBs with a uniform concentration, assign each 1 meter square surface a unique sequential number.

(i) For three or fewer 1 meter square areas, sample all of the areas.

(ii) For four or more 1 meter square areas, use a random number generator or table to select a minimum of 10 percent of the areas from the list, or to select three areas, whichever is more.

(2) For other large nearly flat surfaces, sample all of the one meter square areas.

(b) *Small or irregularly shaped surfaces*. For small surfaces having irregular contours, such as hand tools, natural gas pipeline valves, and most exterior surfaces of machine tools, sample the entire surface. Any person may select sampling locations for small, nearly flat surfaces in accordance with § 761.308 with the exception that the maximum area in § 761.308(a) is <1 meter square.

(c) *Preparation of surfaces*. Drain all free-flowing liquids from surfaces and brush off dust or loose grit.

§ 761.304 Determining sample location.

(a) For 1 square meter non-porous surface areas having the same size and shape, it is permissible to sample the same 10 cm by 10 cm location or position in each identical 1 square meter area. This location or position is determined in accordance with § 761.306 or § 761.308.

(b) If some 1 square meter surfaces for a larger non-porous surface area have different sizes and shapes, separately select the 10 cm by 10 cm sampling position for each different 1 square meter surface in accordance with § 761.308.

(c) If non-porous surfaces have been cleaned and the cleaned surfaces do not meet the applicable standards or levels, surfaces may be recleaned and resampled. When resampling surfaces previously sampled to verify cleanup levels, use the sampling procedures in §§ 761.306 through 761.316 to resample the surfaces. If any sample site selected coincides with a previous sampling site, restart the sample selection process until all resampling sites are different from any previous sampling sites.

§ 761.306 Sampling 1 meter square surfaces by random selection of halves.

(a) Divide each 1 meter square portion where it is necessary to collect a surface wipe test sample into two equal (or as nearly equal as possible) halves. For example, divide the area into top and bottom halves or left and right halves. Choose the top/bottom or left/right division that produces halves having as close to the shape of a circle as possible. For example, a square is closer to the shape of a circle than is a rectangle and a rectangle having a length to width ratio of 2:1 is closer to the shape of a circle than a rectangle having a length to width ratio of 3:1.

(b) Assign a unique identifier to each half and then select one of the halves for further sampling with a random number generator or other device (i.e., by flipping a coin).

(c) Continue selecting progressively smaller halves by dividing the previously selected half, in accordance with paragraphs (a) and (b) of this section, until the final selected half is larger than or equal to 100 cm^2 and smaller than 200 cm^2.

(d) Perform a standard PCB wipe test on the final selected halves from each 1 meter square portion.

(e) The following is an example of applying sampling by halves. Assume that the area to sample is a 1 meter square surface area (a square that has sides 1 meter long). Assign each half to one face of a coin. After flipping the coin, the half assigned to the face of the coin that is showing is the half selected.

(1) Selecting the first half:

(i) For a square shape the top/bottom halves have the same shape as the left/right halves when compared to a circle, i.e., regardless of which way the surface is divided, each half is 1 half meter wide by 1 meter long. Therefore, divide the area either top/bottom or left/right. For selecting the first half, this example will select from left/right halves.

(ii) A coin flip selects the left half. The dimensions of this selected surface area are 1 meter high and ½ meter wide.

(2) Selecting the second half:

(i) If the next selection of halves was left/right, the halves would be rectangles four times as long as they are wide (¼ meter wide and 1 meter high). Halves selected from top/bottom would be square (½ meter on a side). Therefore, select the next halves top/bottom, because the shape of the top/bottom halves (square) is closer to the shape of a circle than the shape of the left/right halves (long narrow rectangles).

(ii) A coin flip selects the top half. The dimensions of this selected surface area are ½ meter high and ½ meter wide.

(3) Selecting the third half:

(i) Just as for the selection of the first half, which divided the original square area, both the left/right and the top/bottom halves have the same shape when compared to a circle (both are rectangles having the same dimensions). Therefore, choose either left/right or top/bottom halves. This example will select from left/right halves.

(ii) A coin flip selects the right half. The dimensions of this selected surface are ¼ meter by ½ meter.

(4) Selecting the fourth half:

(i) If the next selection of halves was left/right, the halves would be rectangles four times as long as they are wide (⅛ meter wide and ½ meter high. Halves selected from top/bottom would be square (¼ meter on a side). Therefore, select the next halves top/bottom, because the shape of the top/bottom halves (square) are closer to the shape of a circle than the shape of the left/right halves (long narrow rectangles).

(ii) A coin flip selects the bottom half. The dimensions of this selected surface area are ¼ meter high and ¼ meter wide.

(5) Selecting the fifth half:

(i) Just as for the selection of the first and third halves, both the left/right and the top/bottom halves have the same

shape when compared to a circle (both are rectangles having the same dimensions). Therefore, choose either left/right or top/bottom halves. This example will select from left/right halves.

(ii) A coin flip selects the right half. The dimensions of the selected surface are ⅛ meter by ¼ meter.

(6) Selecting the sixth half:

(i) If the next selection of halves was left/right, the halves would be rectangles four times as long as they are wide (1/16 meter wide and ¼ meter high. Halves selected from top/bottom would be square (⅛ meter on a side). Therefore, select the next halves top/bottom, because the shape of the top/bottom halves (square) are closer to the shape of a circle than the shape of the left/right halves (long narrow rectangles).

(ii) A coin flip selects the top half. The dimensions of this selected surface are ⅛ meter high and ⅛ meter wide or 12.5 cm by 12.5 cm.

(7) Collect a standard wipe test sample in the sixth half. Since the dimensions of half of the sixth half would be 12.5 cm by 6.25 cm, the area (approximately 78 cm^2) would be less than the required 100 cm^2 minimum area for the standard wipe test. Therefore, no further sampling by halves is necessary. Take the standard wipe test samples of the entire selected sixth half.

§ 761.308 Sample selection by random number generation on any two-dimensional square grid.

(a) Divide the surface area of the non-porous surface into rectangular or square areas having a maximum area of 1 square meter and a minimum dimension of 10 centimeters.

(b) Measure the length and width, in centimeters, of each area created in paragraph (a) of this section. Round off the number of centimeters in the length and the width measurements to the nearest centimeter.

(c) For each 1 square meter area created in accordance with paragraph (a) of this section, select two random numbers: one each for the length and width borders measured in paragraph (b) of this section. An eligible random number can be from zero up to the total width, minus 10 centimeters.

(d) Locate the 10 centimeter by 10 centimeter sample.

(1) Orient the 1 square meter surface area so that, when you are facing the area, the length is left to right and the width is top to bottom. The origin, or reference point for measuring selected random numbers of centimeters to the sampling area, is on the lower left corner when facing the surface.

(2) Mark the random number selected for the length distance, in centimeters, from the origin to the right (at the bottom of the area away from the origin).

(3) From the marked length distance on the bottom of the area, move perpendicularly up from the bottom of the area into the area for the distance randomly selected for the width.

(4) Use the point determined in paragraph (d)(3) of this section as the lower left corner of the 10 centimeter by 10 centimeter sample.

§ 761.310 Collecting the sample.

Use the standard wipe test as defined in § 761.123 to sample one 10 centimeter by 10 centimeter square (100 cm^2) area to represent surface area PCB concentrations of each square meter or fraction of a square meter of a nearly flat, non-porous surface. For small surfaces, use the same procedure as for the standard wipe test, only sample the entire area, rather than 10 centimeter by 10 centimeter squares.

§ 761.312 Compositing of samples.

For a surface originally contaminated by a single source of PCBs with a uniform concentration, it is permissible to composite surface wipe test samples and to use the composite measurement to represent the PCB concentration of the entire surface. Composite samples consist of more than one sample gauze extracted and chemically analyzed together resulting in a single measurement. The composite measurement represents an arithmetic mean of the composited samples.

(a) *Compositing samples from surfaces to be used or reused*. For small or irregularly shaped surfaces or large nearly flat surfaces, if the surfaces are contaminated by a single source of PCBs with a uniform concentration, composite a maximum of three adjacent samples.

(b) *Compositing samples from surfaces to be disposed of off-site or on-site*. (1) For small or irregularly shaped surfaces, composite a maximum of three adjacent samples.

(2) For large nearly flat surfaces, composite a maximum of 10 adjacent samples.

§ 761.314 Chemical analysis of standard wipe test samples.

Perform the chemical analysis of standard wipe test samples in accordance with § 761.272. Report sample results in micrograms per 100 cm^2.

§ 761.316 Interpreting PCB concentration measurements resulting from this sampling scheme.

(a) For an individual sample taken from an approximately 1 meter square portion of the entire surface area and not composited with other samples, the status of the portion is based on the surface concentration measured in that sample. If the sample surface concentration is not equal to or lower than the cleanup level, by inference the entire 1 meter area, and not just the immediate area where the sample was taken, is not equal to or lower than the cleanup level.

(b) For areas represented by the measurement results from compositing more than one 10 centimeter by 10 centimeter sample, the measurement for the composite is the measurement for the entire area. For example, when there is a composite of 10 standard wipe test samples representing 9.5 square meters of surface area and the result of the analysis of the composite is 20 μg/100 cm^2, then the entire 9.5 square meters has a PCB surface concentration of 20 μg/100 cm^2, not just the area in the 10 cm by 10 cm sampled areas.

(c) For small surfaces having irregular contours, where the entire surface was sampled, measure the surface area. Divide 100 cm^2 by the surface area and multiply this quotient by the total number of micrograms of PCBs on the surface to obtain the equivalent measurement of micrograms per 100 cm^2.

Subpart Q—Self-Implementing Alternative Extraction and Chemical Analysis Procedures for Non-liquid PCB Remediation Waste Samples

§ 761.320 Applicability.

This subpart describes self-implementing comparison testing requirements for chemical extraction and chemical analysis methods used as an alternative to the methods required in §§ 761.272 or 761.292. Any person conducting comparison testing under this subpart must comply with the requirements of § 761.80(i), including notification. Use alternative methods only after successful completion of these comparison testing requirements and after documentation of the results of the testing.

§ 761.323 Sample preparation.

(a) The comparison study requires analysis of a minimum of 10 samples weighing at least 300 grams each. Samples of PCB remediation waste used in the comparison study must meet the following three requirements.

(1) The samples must either be taken from the PCB remediation waste at the

cleanup site, or must be the same kind of material as that waste. For example, if the waste at the cleanup site is sandy soil, you must use the same kind of sandy soil in the comparison study. Do not use unrelated materials such as clay soil or dredged sediments in place of sandy soil.

(2) PCB remediation waste may contain interferences which confound or hamper sample extraction and chemical analysis. These interferences may be from chemicals or other attributes preexisting in the waste material, resulting from the PCB contamination source, or resulting from treatment to remove or destroy PCBs. Comparison study samples must also contain these interfering materials to demonstrate successful analysis in their presence. For example, a PCB remediation waste may have been co-disposed with chlorobenzene solvents or chlorinated pesticides. These chlorinated compounds would have to be present in the comparison study compounds at the same levels found, or at the highest levels expected to be found, in the PCB remediation waste. As another example, for PCB remediation waste which had been solvent washed with liquid amines to remove PCBs, comparison study samples would have to contain concentrations of these amines at the same levels found, or at the highest levels expected to be found, in the PCB remediation waste.

(b) Prior to initiating the comparison study, confirm the following PCB concentrations in the comparison study samples using the methods specified in § 761.292. All samples of non-liquid PCB remediation waste must have PCB concentrations between 0.1 and 150 ppm.

(1) A minimum of three comparison study samples must have PCB concentrations above the cleanup level specified for the site in § 761.61(a)(4) and a minimum of three comparison study samples must have PCB concentrations below the specified cleanup level.

(2) At least one comparison study sample must have a PCB concentration ≥90 percent and ≤100 percent of the cleanup level.

(3) At least one comparison study sample must have a PCB concentration ≥100 percent and ≤110 percent of the cleanup level.

(c) If the comparison study samples do not have the concentrations or concentration ranges required by paragraph (b) of this section, for purposes of use in this chemical extraction and chemical analysis comparison study, a person may adjust PCB concentrations by dilution. Any excess material resulting from the preparation of these samples, which is not used as an analytical sample, is regulated as the PCB concentration in the component having the highest PCB concentration of the component materials in the sample.

§ 761.326 Conducting the comparison study.

Extract or analyze the comparison study samples using the alternative method. For an alternative extraction method or alternative analytical method to be comparable to the methods required in § 761.292, all of the following conditions must be met.

(a) All samples having PCB concentrations greater than or equal to the level of concern, as measured by the methods required in § 761.292, are found to be greater than or equal to the level of concern as measured by the alternative method (no false negatives).

(b) Only one sample which contains PCBs at a level less than the level of concern, as measured by the methods required in § 761.292, is found to have a PCB concentration greater than the level of concern as measured by the alternative method (false positive); and all other samples which contain PCBs at levels less than the level of concern, as measured by the methods required in § 761.292, are found by the alternative method to have PCBs less than the level of concern (there are no additional false positives).

Subpart R—Sampling Non-Liquid, Non-Metal PCB Bulk Product Waste for Purposes of Characterization for PCB Disposal in Accordance With § 761.62, and Sampling PCB Remediation Waste Destined for Off-Site Disposal, in Accordance With § 761.61

§ 761.340 Applicability.

Use the procedures specified in this subpart to sample the following types of waste when it is necessary to analyze the waste to determine PCB concentration or leaching characteristics for storage or disposal.

(a) Existing accumulations of non-liquid, non-metal PCB bulk product waste.

(b) Non-liquid, non-metal PCB bulk product waste from processes that continuously generate new waste.

(c) Non-liquid PCB remediation waste from processes that continuously generate new waste, that will be sent off-site for disposal.

§ 761.345 Form of the waste to be sampled.

PCB bulk product waste and PCB remediation waste destined for off-site disposal must be in the form of either flattened or roughly conical piles. This subpart also contains a procedure for contemporaneous sampling of waste as it is being generated.

§ 761.346 Three levels of sampling.

To select a sample of the waste and prepare it for chemical extraction and analysis, there are three required levels of random sampling.

(a) First, select a single 19-liter (5 gallon) portion from a composite accumulated either contemporaneously with the generation of the waste or by sampling an existing pile of waste. Collection procedures for the first level of sampling from existing piles of waste are in § 761.347. Collection procedures for the first level of sampling from a contemporaneous generation of waste are in § 761.348. Compositing requirements and requirements for the subsampling of composite samples to result in a single 19-liter sample are in § 761.350. Send the 19-liter sample to the laboratory for the second and third levels of sampling, including particle size reduction for leach testing and drying as required by § 761.1(b)(4).

(b) Second, at the laboratory, select one quarter of the 19-liter sample. Procedures the laboratory must use for this second level of sample selection appear in § 761.353.

(c) Third, select a 100 gram subsample from the second level subsample. Procedures the laboratory must use for this third level of sample selection appear in § 761.355.

§ 761.347 First level sampling—waste from existing piles.

(a) *General.* Sample piles that are either specifically configured for sampling (see paragraph (b) of this section) or that are of conical shape (see paragraph (c) of this section). If sampling from either of these shapes is not possible, conduct contemporaneous sampling, in accordance with the procedures in § 761.348, or obtain the approval of the Regional Administrator for an alternate sampling plan in accordance with § 761.62(c).

(b) *Specifically configured piles.* A specifically configured pile is a single flattened pile in the shape of a square or rectangle having no restrictions on length or width but restricted to 30 cm (1 foot) in depth. A square shaped pile facilitates sampling site selection for the first level sample. Select eight 19-liter samples from the pile and composite them into one 19-liter sample as follows:

(1) Divide the pile into quarters.

(2) Divide each of the quarter sections into quarters (i.e., into sixteenths of the original pile).

(3) Select two sixteenths from each of the four quarters, according to one of the two following options:

(i) Randomly select the two sixteenths from one quarter and sample the sixteenths occupying the same positions in each of the other three quarters.

(ii) Randomly select two sixteenths from each of the four quarters (i.e., perform a random selection four different times).

(4) At this point the eight selected sixteenths undergo further division and sample selection. Divide each of the eight selected sixteenths into four equal parts. Using a random number generator or random number table, select one of the four equal parts from each of the eight equal areas. If each of the four equal parts has a volume >76 liters when projected downwards 30 cm, continue to divide each selected area into four equal parts, and select one of the parts, until each selected area has a volume of <76 liters but ≥19 liters. When projected to a depth of 30 cm, a square having a 25 cm side or a circle having a diameter of approximately 28.5 cm equals a volume of approximately 19 liters. The volume of 76 liters is equal to the volume enclosed by a square having a side of 50 cm (or other shape having an area of 250 cm^2) projected to a depth of 30 cm.

(5) Take one sample of approximately 19 unsorted liters of waste from each of the eight selected areas. Place each sample into a separate 19-liter container, allowing only sufficient space at the top of the container to secure the lid.

(6) Composite the eight 19-liter samples in accordance with § 761.350.

(c) *Conical-shaped piles*. If it is necessary to sample a pile which is too large to be spread on the site to a uniform thickness of 1 foot or 30 cm, or if there are too many piles to spread out in the space available, use the following procedure to sample the piles. This procedure assumes that the shape of the piles is analogous to a cone; that is, having a circular base with PCB bulk product waste or PCB remediation waste destined for off-site disposal stacked up uniformly to a peak that is a point centered above the center of the circular base. Collect eight 19-liter samples as follows:

(1) *Collecting samples from more than one pile*. If the PCB bulk product waste or PCB remediation waste consists of more than one pile or container, assign each pile or container an integer number and then generate seven random integer numbers to select the piles from which you will collect samples. It is possible that this random selection procedure will result in selecting the same pile number more than once, even if seven or more piles are present. If so, sample the pile once and restart the sampling collection process to collect additional samples. Do not collect multiple samples from the same location in the pile.

(2) *Collecting samples from a single pile*. If only one pile or container is present, collect all eight samples from the same pile.

(3) *Setting up the sample site selection system from a pile*. Locate a sample in a pile by the use of three parameters: a particular radial direction, ''r,'' from the peak at the center of the pile to the outer edge at the base of the pile; a point, ''s,'' along that radial direction between the peak of the pile and the outer edge of the base of the pile; and a depth, ''t'', beneath point ''s.'' The top of the sample material will be below depth *t*, at point *s*, on radius *r*. Use a rod, dowel, stake, or broom handle as a marker. Nail or otherwise fasten to the top of the marker two pieces of string or cord of sufficient length and strength to reach from the top of the marker at the top of the pile to the farthest peripheral edge at the bottom of the pile, when the marker is positioned at the top or apex of the pile. Pound or push the marker into the top center (apex) of the pile, downward toward the center of the base. Insert the marker for at least 30 cm or one foot until the marker is rigidly standing on its own, even when the cord is pulled tight to the bottom peripheral edge of the pile. Ensure that the marker protrudes from the top of the pile sufficiently to allow the strings to move easily around the pile when they are pulled tight. Select the three parameters and the sampling location as follows:

(i) Determine the radial component (r) of the location for each sample.

(A) Tie to a stake or otherwise fasten one of the strings at ''b,'' the bottom of the pile, as a reference point for finding *r*.

(B) Measure the circumference ''c,'' the distance around the bottom of the pile. Determine *r* from *b* in one of two ways:

(*1*) Multiply *c* by a randomly generated fraction or percentage of one.

(*2*) Select a random number between one and the total number of centimeters in *c*.

(C) Locate *r* by starting at *b*, the place where the fixed string meets the base of the pile, and travel clockwise around the edge of the pile at the base for the distance you selected in paragraph (c)(3)(iii) of this section.

(D) Fasten the second string at the selected distance. The second string marks the first parameter *r*.

(ii) Determine the second parameter s of the location for each sample.

(A) Measure the distance, *l*, along the string, positioned in paragraph (c)(3)(i)(D) of this section, from the top to the bottom of the pile at the selected radial distance *r*. Determine the distance *s* from *l* in one of two ways:

(*1*) Multiply *l* by a randomly generated fraction or percentage of one.

(*2*) Select a random number between one and the total number of centimeters in *l*.

(B) Mark, for example by placing a piece of tape on the string positioned according to paragraph (c)(3)(i)(D) of this section, the distance *s*, up from the bottom of the pile on the string at *r*.

(iii) Determine the third and final parameter *t* of the location for each sample.

(A) Mark and number 1 cm intervals from one end of a rigid device, for example a rod, dowel, stake, or broom handle, for measuring the distance from the top of the pile to the bottom at the point *s* selected in paragraph (c)(3)(ii)(B) of this section. The marked and numbered device shall be of sufficient strength to be forced down through the maximum depth of the pile and sufficient length to measure the depth of the waste in the pile at any point.

(B) Take the measuring device, constructed according to paragraph (c)(3)(iii)(A) of this section, and at position s, push the end of the device marked with zero straight down into the pile until it reaches the bottom of the pile or ground level. The vertical distance ''v'' is the number of centimeters from the surface of the pile at point s on the string to the bottom of the pile or ground level. Read the distance *v* on the measuring device at the surface of the pile. From the distance *v*, determine *t*, in one of two ways:

(*1*) Randomly generate a fraction of one and multiply the fraction times *v*.

(*2*) Select a random number between zero and the total number of centimeters of the vertical distance *v*.

(iv) Dig a hole straight down into the pile for *t* centimeters (inches) from the surface of the pile at *s*.

(v) At depth *t*, directly under the s mark on the string, outline the top of the sample container and collect (shovel) all waste under the outline in the following order of preference in paragraphs (c)(3)(v)(A) through (c)(3)(v)(C) of this section. It is possible that some of the eight sampling locations will not provide 19 liters of sample.

(A) For a depth of 30 cm.

(B) Until the container is full.

(C) Until the ground level is reached.

(d) *Compositing the samples.* Composite the eight 19-liter samples and subsample in accordance with § 761.350. Send the subsample to a laboratory for further sampling as described in §§ 761.353 and 761.355 and for chemical extraction and analysis. If there is insufficient sample for a 19-liter sample from the composite sample composed of the eight iterations of sample site selection, according to the procedures in paragraphs (c)(3)(i) through (c)(3)(v) of this section, select additional sample sites, collect additional samples and composite the additional waste in the samples until a minimum of 19 liters is in the composite.

§ 761.348 Contemporaneous sampling.

Contemporaneous sampling is possible when there is active generation of waste and it is possible to sample the waste stream as it is generated. Collect eight 19-liter samples as follows.

(a) Collect each sample by filling a 19-liter (5 gallon) container at a location where the PCB bulk product waste is released from the waste generator onto a pile or into a receptacle container before the waste reaches the pile or receptacle container.

(b) Determine a sample collection start time using a random number generator or a random number table to select a number between 1 and 60. Collect the first sample at the randomly selected time in minutes after start up of the waste output, or if the waste is currently being generated, after the random time is selected. For example, if the randomly selected time is 35, begin collection 35 minutes after the start up of waste generation. Similarly, if waste output is ongoing and the random start determination occurred at 8:35 a.m., collect the first sample at 9:10 a.m. (35 minutes after the random start determination).

(c) Collect seven more samples, one every 60 minutes after the initial sample is collected. If the waste output process stops, stop the 60–minute interval time clock. When the process restarts, restart the 60–minute interval time clock and complete the incomplete 60–minute interval.

(d) Composite the eight 19-liter samples and subsample in accordance with § 761.350.

§ 761.350 Subsampling from composite samples.

(a) *Preparing the composite.* Composite the samples (eight from a flattened pile; eight or more from a conical pile; eight from waste that is continuously generated) and select a 19-liter subsample for shipment to the chemical extraction and analysis laboratory for further subsampling. There are two options for the preparation of the composite:

(1) *Option one.* Place all of the contents of all 19-liter samples that you collected into a 209 liter (55 gallon) drum or similar sized, cylinder-shaped container. Completely close the container, and roll it 10 or more complete revolutions to mix the contents.

(2) *Option two.* Add the 19-liter samples one at a time to a 209 liter (55 gallon) drum. Between the addition of each 19-liter sample, stir the composite using a broom handle or similar long, narrow, sturdy rod that reaches the bottom of the container. Stir the mixture for a minimum of 10 complete revolutions of the stirring instrument around the container at a distance approximately half way between the outside and center of the container.

(b) *Selecting a 19-liter subsample from the composite.* Once the composite is mixed, pour the mixture of waste out on a plastic sheet and either divide it into 19-liter size piles or make one large pile.

(1) From 19-liter sized piles, use a random number generator or random number table to select one of the piles.

(2) From one large pile, flatten the pile to a depth of 30 cm and divide it into 4 quarters of equal size. Use a random number generator or random number table to select one quarter of the pile. Further divide the selected quarter pile into 19-liter portions and use a random number generator or random number table to select one 19-liter portion. A square having a 25 cm side or a circle having a diameter of approximately 28.5 cm when projected downwards 30 cm equals approximately 19 liters.

(c) *Transferring the sample to the analytical laboratory.* Place the selected 19-liter subsample in a container, approved for shipment of the sample, to the chemical extraction and analysis laboratory, for the next step in sample selection in accordance with § 761.353.

§ 761.353 Second level of sample selection.

The second level of sample selection reduces the size of the 19-liter subsample that was collected according to either § 761.347 or § 761.348 and subsampled according to § 761.350. The purpose of the sample size reduction is to limit the amount of time required to manually cut up larger particles of the waste to pass through a 9.5 millimeter (mm) screen.

(a) *Selecting a portion of the subsample for particle size reduction.* At the chemical extraction and analysis laboratory, pour the 19-liter subsample onto a plastic sheet or into a pan and divide the subsample into quarters. Use a random number generator or random number table to select one of these quarters.

(b) *Reduction of the particle size by the use of a 9.5 mm screen.* Collect the contents of the selected quarter of waste resulting from conducting the procedures in paragraph (a) of this section and shake the waste in a 9.5 mm screen. Separate the waste material which passes through the screen from the waste material which does not pass through the screen. Manually cut or otherwise reduce the size of all parts of the waste portion which did not pass through the 9.5 mm screen, such that each part of the waste shall pass through the 9.5 mm screen by shaking.

(c) Drying the reduced particle size waste. Dry all of the waste portion resulting from conducting the procedures in paragraph (b) of this section, from 10 to 15 hours in a drying oven at 100 °C. Allow the dried waste to cool to room temperature.

(d) *Mixing the dried waste.* Place all of the waste resulting from conducting the procedures in paragraph (c) of this section in a 19-liter pail or similarly sized, cylinder-shaped container. Mix the dried material according to one of the two following options:

(1) *First mixing option.* Completely close the container and roll the container a minimum of 10 complete revolutions to mix the contents.

(2) *Second mixing option.* Use a sturdy stirring rod, such as a broom handle or other device that reaches the bottom of the container, to stir the waste for a minimum of 10 complete revolutions around the container at a distance approximately half way between the outside and the center of the container.

§ 761.355 Third level of sample selection.

The third level of sample selection further reduces the size of the subsample to 100 grams which is suitable for the chemical extraction and analysis procedure.

(a) Divide the subsample resulting from conducting the procedures in § 761.353 of this part into 100 gram portions.

(b) Use a random number generator or random number table to select one 100 gram size portion as a sample for a procedure used to simulate leachate generation.

(c) Dry the 100 gram sample, selected after conducting the procedure in paragraph (b) of this section, for 10 to 15 hours in a drying oven at 100 °C and

cool it to the analytical laboratory room temperature before analysis using a procedure used to simulate leachate generation. This sample was dried previously in the larger quantity sample at the second level of sampling (§ 761.353(c)) and is dried a second time here (in the third level of sample selection). This dried and cooled sample must weigh at least 50 grams.

(d) If the dried and cooled sample weighs <50 grams, select additional 100 gram portions of sample one at a time by repeating the directions in paragraph (b) and (c) of this section, and add each additional 100 gram portion of sample to the first 100 gram portion until at least 50 grams of dried material is in the sample to be analyzed using a procedure used to simulate leachate generation.

§ 761.356 Conducting a leach test.

No method is specified as a procedure used to simulate leachate generation.

§ 761.357 Reporting the results of the procedure used to simulate leachate generation.

Report the results of the procedure used to simulate leachate generation as micrograms PCBs per liter of extract from a 100 gram sample of dry bulk product waste. Divide 100 grams by the grams in the sample and multiply this quotient by the number of micrograms PCBs per liter of extract to obtain the equivalent measurement from a 100 gram sample.

§ 761.358 Determining the PCB concentration of samples of waste.

Use either Method 3500B/3540C or Method 3500B/3550B from EPA's SW-846, Test Methods for Evaluating Solid Waste, or a method validated under subpart Q of this part, for chemical extraction of PCBs from individual and composite samples of PCB bulk product waste. Use Method 8082 from SW-846, or a method validated under subpart Q of this part, to analyze these extracts for PCBs.

§ 761.359 Reporting the PCB concentrations in samples.

Report all sample concentrations as ppm by weight on a dry weight basis.

Subpart S—Double Wash/Rinse Method for Decontaminating Non-Porous Surfaces

§ 761.360 Background.

The double wash/rinse procedure is used to quickly and effectively remove PCBs on surfaces. It is important to select and use the proper cleanup equipment, to conduct the procedure correctly so as not to redistribute PCBs, and to comply with disposal requirements for all cleanup materials.

§ 761.363 Applicability.

The double wash/rinse procedure includes two washing steps and two rinsing steps. The two washing and rinsing steps are slightly different depending on whether a contaminated surface was relatively clean before the spill (see § 761.372), or whether the surface was coated or covered with dust, dirt, grime, grease or another absorbent material (see § 761.375).

§ 761.366 Cleanup equipment.

(a) Use scrubbers and absorbent pads that are not dissolved by the solvents or cleaners used, and that do not shred, crumble, or leave visible fragments on the surface. Scrubbers and absorbent pads used to wash contaminated surfaces must not be reused. Scrubbers and absorbent pads for rinsing must not contain ≥2 ppm PCBs. Scrubbers and absorbent pads used in the second rinse of contaminated surfaces may be reused to wash contaminated surfaces.

(b) Capture and contain all solvents and cleaners for reuse, decontamination, or disposal. Clean organic solvents contain <2 ppm PCBs. Clean water contains <3 ppb PCBs.

§ 761.369 Pre-cleaning the surface.

If visible PCB-containing liquid is present on the surface to be cleaned, thoroughly wipe or mop the entire surface with absorbent paper or cloth until no liquid is visible on the surface.

§ 761.372 Specific requirements for relatively clean surfaces.

For surfaces that do not appear dusty or grimy before a spill, such as glass, automobile surfaces, newly-poured concrete, and desk tops, use the double wash/rinse procedures in this section.

(a) *First wash*. Cover the entire surface with organic solvent in which PCBs are soluble to at least 5 percent by weight. Contain and collect any runoff solvent for disposal. Scrub rough surfaces with a scrub brush or disposable scrubbing pad and solvent such that each 900 cm^2 (1 square foot) of the surface is always very wet for 1 minute. Wipe smooth surfaces with a solvent-soaked, disposable absorbent pad such that each 900 cm^2 (1 square foot) is wiped for 1 minute. Any surface <1 square foot shall also be wiped for 1 minute. Wipe, mop, and/or sorb the solvent onto absorbent material until no visible traces of the solvent remain.

(b) *First rinse*. Wet the surface with clean rinse solvent such that the entire surfaces is very wet for 1 minute. Drain and contain the solvent from the surface. Wipe the residual solvent off the drained surface using a clean, disposable absorbent pad until no liquid is visible on the surface.

(c) *Second wash*. Repeat the procedures in paragraph (a) of this section. The rinse solvent from the first rinse (paragraph (b) of this section) may be used.

(d) *Second rinse*. Repeat the procedures in paragraph (b) of this section.

§ 761.375 Specific requirements for surfaces coated or covered with dust, dirt, grime, grease, or another absorbent material.

(a) *First wash*. Cover the entire surface with concentrated or industrial strength detergent or non-ionic surfactant solution. Contain and collect all cleaning solutions for proper disposal. Scrub rough surfaces with a scrub brush or scrubbing pad, adding cleaning solution such that the surface is always very wet, such that each 900 cm^2 (1 square foot) is washed for 1 minute. Wipe smooth surfaces with a cleaning solution-soaked disposable absorbent pad such that each 900 cm^2 (1 square foot) is wiped for 1 minute. Wash any surface <1 square foot for 1 minute. Mop up or absorb the residual cleaner solution and suds with an clean, disposable, absorbent pad until the surface appears dry. This cleaning should remove any residual dirt, dust, grime, or other absorbent materials left on the surface during the first wash.

(b) *First rinse*. Rinse off the wash solution with 1 gallon of clean water per square foot and capture the rinse water. Mop up the wet surface with a clean, disposable, absorbent pad until the surface appears dry.

(c) *Second wash*. Follow the procedure in § 761.372(a).

(d) *Second rinse*. Follow the procedure in § 761.372(b).

§ 761.378 Decontamination, reuse, and disposal of solvents, cleaners, and equipment.

(a) *Decontamination*. Decontaminate solvents and non-porous surfaces on equipment in accordance with the standards and procedures in § 761.79(b) and (c).

(b) *Reuse*. A solvent may be reused so long as its PCB concentration is <50 ppm. Decontaminated equipment may be reused in accordance with § 761.30(u). Store solvents and equipment for reuse in accordance with § 761.35.

(c) *Disposal*. Dispose of all solvents, cleaners, and absorbent materials in accordance with § 761.79(g). Dispose of equipment in accordance with § 761.61(a)(5)(v)(A), or decontaminate in accordance with § 761.79(b) or (c). Store

for disposal equipment, solvents, cleaners, and absorbent materials in accordance with § 761.65.

Subpart T—Comparison Study for Validating a New Performance-Based Decontamination Solvent under § 761.79(d)(4)

§ 761.380 Background.

This subpart provides self-implementing criteria for validating the conditions for use in performance-based decontamination of solvents other than those listed in § 761.79(c)(3) and (c)(4). Any person may use this subpart for validating either a chemical formulation or a product with a trade name whether or not the constituents of the product are proprietary.

§ 761.383 Applicability.

Use the self-implementing decontamination procedure only on smooth, non-porous surfaces that were once in contact with liquid PCBs. Decontamination procedures under this subpart shall exactly parallel § 761.79(c)(3) and (c)(4), except that the procedures described in § 761.79(c)(3)(iii) and (c)(3)(iv) and (c)(4)(iii), (c)(4)(iv) and (c)(4)(vii) may be revised to contain parameters validated in accordance with this subpart.

§ 761.386 Required experimental conditions for the validation study and subsequent use during decontamination.

The following experimental conditions apply for any solvent:

(a) *Temperature and pressure.* Conduct the validation study and perform decontamination at room temperature (from ≥15 °C to ≤30 °C) and at atmospheric pressure.

(b) *Agitation.* Limit the movement in the solvent to the short-term movement from placing the contaminated surface into the soak solvent and from removing the surface from the soak solvent.

(c) *Time of soak.* Soak the surface for a minimum of 1 hour.

(d) *Surface conditions for the validation study.* Prior to beginning the validation study, ensure that there are no free-flowing liquids on surfaces and that surfaces are dry (i.e., there are no liquids visible without magnification). Also ensure that surfaces are virtually free from non-liquid residues, corrosion, and other defects which would prevent the solvent from freely circulating over the surface.

(e) *Confirmatory sampling for the validation study.* Select surface sample locations using representative sampling or a census. Sample a minimum area of 100 cm^2 on each individual surface in the validation study. Measure surface concentrations using the standard wipe test, as defined in § 761.123, from which a standard wipe sample is generated for chemical analysis. Guidance for wipe sampling appears in the document entitled ''Wipe Sampling and Double Wash/Rinse Cleanup as Recommended by the Environmental Protection Agency PCB Spill Cleanup Policy,'' available from the TSCA Assistance Information Service, Environmental Protection Agency, 401 M St., SW., Washington, DC 20460.

(f) *Concentration of PCBs.* The method validated may be used only to decontaminate surfaces containing PCBs at concentrations on which the validation study was performed and lower concentrations.

§ 761.389 Testing parameter requirements.

There are no restrictions on the variable testing parameters described in this section which may be used in the validation study. The conditions demonstrated in the validation study for these variables shall become the required conditions for decontamination using the solvent being validated and shall replace the comparable conditions in § 761.79(b)(3) through (b)(6). There are limited potential options for varying a single requirement in this section. If you change one of these variable requirements, change it only in the way listed in this section and do not change any other validated conditions. If you desire to change more than one of the requirements in this section, you must conduct a new study to validate the decontamination under the desired conditions.

(a) The study apparatus is not standardized. Critical components of the study are the PCB material (for example MODEF or some other spiking solution), the volume of the soaking solvent, and the area of the contaminated surface. The EPA study used beakers and shallow dishes as the experimental vessels to contain the surface and solvent during the soaking process. In order to minimize surface-to-volume ratios, it is convenient to utilize flat contaminated surfaces and shallow solvent containers. During the validation study, use the same ratio of contaminated surface area to soak solvent volume as would be used during actual decontamination. It is also permissible to use a smaller surface area to soaking solvent volume than used in the validation study, so long as all other required parameters are used as validated in the confirmation required in § 761.386(a) through (f), and paragraphs (a) through (c) of this section. Do not use a larger surface-area-to-solvent-volumes ratio or different kind of solvent based on the results of the validation study.

(b) Except for the minimum soak time of 1 hour (as required in § 761.386(c)), the length of soak time is not otherwise restricted in the validation study. The soak time used in the validation study, however, is a use requirement for subsequent decontamination using the solvent being validated. It is permissible to use longer soak times for decontamination than the soak time used in the validation study, if all other parameters required in § 761.386, and paragraphs (a) and (c) of this section are used.

(c) There is no restriction on the kind of material containing PCBs to use to create the surface contamination for the validation study. There is also no restriction on the level of starting PCB surface concentration. It is permissible to use lower concentrations of PCB than the concentration used in the validation study, if all other parameters required in § 761.386(a) through (f), and paragraphs (a) through (c) of this section are used.

§ 761.392 Preparing validation study samples.

(a)(1) To validate a procedure to decontaminate a surface contaminated with a spill from liquid of a known concentration, contaminate (spike) the surface to be used in the validation study as follows:

(i) Use a spiking solution made of PCBs mixed with a solvent to contaminate clean surfaces. Clean surfaces are surfaces having PCB surface concentrations <1 μg/100 cm^2 before intentionally contaminating the surface.

(ii) Prior to contaminating a surface for the validation study, mark the surface sampling area to assure that it is completely covered with the spiking solution.

(iii) Deliver the spiking solution onto the surface, covering all of the sampling area. Contain any liquids which spill or flow off the surface. Allow the spiking solution to drip drain off into a container and then evaporate the spiking solution off the contaminated surface prior to beginning the validation study. Contaminate a minimum of eight surfaces for a complete validation study.

(iv) As a quality control step, test at least one contaminated surface to determine the PCB concentration to verify that there are measurable surface levels of PCBs resulting from the contamination before soaking the surface in the decontamination solvent. The surface levels of PCBs on the contaminated surfaces must be ≥20 μg/100 cm^2.

(2) To validate a procedure to decontaminate a specified surface

concentrations of PCBs as measured by a standard wipe sample, contaminate a minimum of 10 surfaces. Contaminate all the surfaces identically following the procedures in paragraph (a)(1) of this section and measure the PCB surface concentrations of at least three of the surfaces using a standard wipe test to establish a surface concentration to be included in the standard operating procedure. The surface levels of PCBs on the contaminated surfaces must be ≥20 μg/100 cm^2.

(b) [Reserved]

§ 761.395 A validation study.

(a) Decontaminate the following prepared sample surfaces using the selected testing parameters and experimental conditions. Take a standard wipe sample of the decontaminated surface.

(1) At least one uncontaminated surface. The surface levels of PCBs on the uncontaminated surface must be <1 μg/100 cm^2.

(2) At least seven contaminated surfaces.

(b)(1) Use SW-846, Test Methods for Evaluating Solid Waste methods for sample extraction and chemical analysis as follows: Use Method 3500B/3540C or Method 3500B/3550B for the extraction and cleanup of the extract and Method 8082 for the chemical analysis, or methods validated under subpart Q of this part.

(2) Report all validation study surface sample concentrations on the basis of micrograms of PCBs per 100 cm^2 of surface sampled.

(c) Following completion of the validation study, measurements from the contaminated surfaces must have an arithmetic mean of ≤10 μg/100 cm^2. If the arithmetic mean is >10 μg/100 cm^2, then the validation study failed and the solvent may not be used for decontamination under § 761.79(d)(4) according to the parameters tested.

§ 761.398 Reporting and recordkeeping.

(a) Submit validation study results to the Director, National Program Chemicals Division (NPCD), (7404), Office of Pollution Prevention and Toxics, 401 M St., SW., Washington, DC, prior to the first use of a new solvent for alternate decontamination under § 761.79(d)(4). The use of a new solvent is not TSCA Confidential Business Information (CBI). From time to time, the Director of NPCD will confirm the use of validated new decontamination solvents and publish the new solvents and validated decontamination procedures in the **Federal Register**.

(b) Any person may begin to use solvent validated in accordance with this subpart at the time results are submitted to EPA.

(c) Record all testing parameters and experimental conditions from the successful validation study into a standard operating procedure (SOP) for reference whenever the decontamination procedure is used. Include in the SOP the identity of the soaking solvent, the length of time of the soak, and the ratio of the soak solvent to contaminated surface area during the soaking process. Also include in the SOP the maximum concentration of PCBs in the spilled material and the identity of the spilled material, and/or the measured maximum surface concentration of the contaminated surface used in the validation study. Record and keep the results of the validation study as an appendix to the SOP. Include in this appendix, the solvent used to make the spiking solution, the PCB concentration of the spiking solution used to contaminate the surfaces in the validation study, and all of the validation study testing parameters and experimental conditions.

[FR Doc. 98–17048 Filed 6–23–98; 11:27 am]

BILLING CODE 6560–50–F

federal register

Monday
June 29, 1998

Part V

Department of Education

National Institute on Disability and Rehabilitation Research; Final Funding Priorities and Inviting Applications for New Rehabilitation Research Training Centers for Fiscal Years 1998–1999; Notice

DEPARTMENT OF EDUCATION

National Institute on Disability and Rehabilitation Research

AGENCY: Department of Education.

ACTION: Notice of final funding priorities for fiscal years 1998–1999 for Rehabilitation Research and Training Centers.

SUMMARY: The Secretary announces final funding priorities for two Rehabilitation Research and Training Centers (RRTCs) under the National Institute on Disability and Rehabilitation Research (NIDRR) for fiscal years 1998–1999. The Secretary takes this action to focus research attention on areas of national need. These priorities are intended to improve rehabilitation services and outcomes for individuals with disabilities.

EFFECTIVE DATE: These priorities take effect on July 29, 1998.

FOR FURTHER INFORMATION CONTACT: Donna Nangle. Telephone: (202) 205–5880. Individuals who use a telecommunications device for the deaf (TDD) may call the TDD number at (202) 205–9136. Internet: Donna__Nangle@ed.gov

Individuals with disabilities may obtain this document in an alternate format (e.g., Braille, large print, audiotape, or computer diskette) on request to the contact person listed in the preceding paragraph.

SUPPLEMENTARY INFORMATION: This notice contains final priorities under the Disability and Rehabilitation Research Projects and Centers Program for two RRTCs related to: (1) aging and mental retardation; and (2) disability statistics.

These final priorities support the National Education Goal that calls for every adult American to possess the skills necessary to compete in a global economy.

The authority for the Secretary to establish research priorities by reserving funds to support particular research activities is contained in sections 202(g) and 204 of the Rehabilitation Act of 1973, as amended (29 U.S.C. 761a(g) and 762).

Note: This notice of final priorities does *not* solicit applications. A notice inviting applications is published in this issue of the **Federal Register**.

Analysis of Comments and Changes

On May 4, 1998, the Secretary published a notice of proposed priorities in the **Federal Register** (63 FR 24718–24721). The Department of Education received three letters commenting on the notice of proposed priorities by the deadline date. Technical and other minor changes—and suggested changes the Secretary is not legally authorized to make under statutory authority—are not addressed.

Aging With Mental Retardation

Comment: The RRTC should be required to carry out research and develop models of service that support aging in place and showcase best practices that provide for an institutional admission diversion. In conjunction with this requirement, the RRTC should be required to develop informational materials that would help people with mental retardation reach a better understanding of what happens (and may happen) to them as they age. These materials and information should illustrate and guide the steps they can take to maintain a healthy lifestyle as older adults.

Discussion: Under the second and third required activities of the priority, an applicant could propose to carry out research and develop models of service that support aging in place and showcase best practices that provide for an institutional admission diversion. The peer review process will evaluate the merits of this proposal. However, NIDRR has no basis for requiring all applicants to carry out this research.

In regard to the commenter's suggestion that RRTC should be required to develop informational materials, the second general RRTC requirement states that the RRTC must develop and disseminate informational materials based on knowledge gained from the Center's research activities, and disseminate the materials to persons with disabilities, their representatives, service providers, and other interested parties. Therefore, if an applicant proposes to carry out the research suggested by the commenter, no further requirements are necessary in order for the RRTC to develop this informational material.

Changes: None.

Comment: The requirement to ''identify, develop, and evaluate accommodations that help maintain employment'' is not among the most significant issues facing persons aging with mental retardation and should be eliminated or made optional.

Discussion: NIDRR acknowledges that for the oldest segment of the population of persons aging with mental retardation, maintaining employment is not as significant an issue as others included in the priority. However, there are a substantial number of persons aging with mental retardation who are employed and face barriers to maintaining employment as they age. Applicants have the discretion to emphasize or deemphasize specific activities included in the priority depending upon the importance the applicant attaches to the activity. An applicant could deemphasize this activity, and the peer review process will evaluate the merits of the proposal. NIDRR declines to eliminate the activity because the knowledge gained from this research could prove to be beneficial to those persons aging with mental retardation who are employed.

Changes: None.

Comment: The required activity on health should be revised to include: development of a model of medical education applicable to managed care; research on coincident conditions in older age; development of practice guidelines and standards for both women's and men's health; identification of care practices to address very old persons; and an examination of dementia care models that further community living.

Discussion: Under the first activity of the priority, an applicant could propose to carry out all of the projects included in the comment. The peer review process will evaluate the merits of the proposal. However, NIDRR has no basis for requiring all applicants to carry out this research.

Changes: None.

Comment: The RRTC should be required to identify aging models that are successful with the general population and demonstrate their applicability with persons aging with mental retardation.

Discussion: Under the first and third activities, an applicant could propose to identify aging models that are successful with the general population and demonstrate their applicability with persons aging with mental retardation. The peer review process will evaluate the merits of the proposal. However, NIDRR has no basis for requiring all applicants to carry out this research.

Changes: None.

Comment: More and more States are developing consumer-directed models of supporting adults with mental retardation. However, not enough empirical data exist about the effectiveness of these service models. The topic of self-direction or consumer direction should be incorporated into the third required activity.

Discussion: NIDRR agrees that integrating research on consumer choice or self-direction in the activities of the RRTC is important and needed.

Changes: The priority has been revised to require the RRTC to address issues of self-direction in all of the required activities except the fourth activity.

Rehabilitation Research and Training Centers

The authority for RRTCs is contained in section 204(b)(2) of the Rehabilitation Act of 1973, as amended (29 U.S.C. 760–762). Under this program, the Secretary makes awards to public and private organizations, including institutions of higher education and Indian tribes or tribal organizations, for coordinated research and training activities. These entities must be of sufficient size, scope, and quality to effectively carry out the activities of the Center in an efficient manner consistent with appropriate State and Federal laws. They must demonstrate the ability to carry out the training activities either directly or through another entity that can provide that training.

The Secretary may make awards for up to 60 months through grants or cooperative agreements. The purpose of the awards is for planning and conducting research, training, demonstrations, and related activities leading to the development of methods, procedures, and devices that will benefit individuals with disabilities, especially those with the most severe disabilities.

Description of Rehabilitation Research and Training Centers

RRTCs are operated in collaboration with institutions of higher education or providers of rehabilitation services or other appropriate services. RRTCs serve as centers of national excellence and national or regional resources for providers and individuals with disabilities and the parents, family members, guardians, advocates or authorized representatives of the individuals.

RRTCs conduct coordinated, integrated, and advanced programs of research in rehabilitation targeted toward the production of new knowledge to improve rehabilitation methodology and service delivery systems, to alleviate or stabilize disabling conditions, and to promote maximum social and economic independence of individuals with disabilities.

RRTCs provide training, including graduate, pre-service, and in-service training, to assist individuals to more effectively provide rehabilitation services. They also provide training including graduate, pre-service, and in-service training, for rehabilitation research personnel.

RRTCs serve as informational and technical assistance resources to providers, individuals with disabilities, and the parents, family members, guardians, advocates, or authorized representatives of these individuals through conferences, workshops, public education programs, in-service training programs and similar activities.

RRTCs disseminate materials in alternate formats to ensure that they are accessible to individuals with a range of disabling conditions.

NIDRR encourages all Centers to involve individuals with disabilities and individuals from minority backgrounds as recipients of research training, as well as clinical training.

The Department is particularly interested in ensuring that the expenditure of public funds is justified by the execution of intended activities and the advancement of knowledge and, thus, has built this accountability into the selection criteria. Not later than three years after the establishment of any RRTC, NIDRR will conduct one or more reviews of the activities and achievements of the Center. In accordance with the provisions of 34 CFR 75.253(a), continued funding depends at all times on satisfactory performance and accomplishment.

General RRTC Requirements

The following requirements apply to the RRTCs pursuant to these absolute priorities, unless noted otherwise. An applicant's proposal to fulfill these requirements will be assessed using applicable selection criteria in the peer review process.

The RRTC must provide: (1) Applied research experience; (2) training on research methodology; and (3) training to persons with disabilities and their families, service providers, and other appropriate parties in accessible formats on knowledge gained from the Center's research activities.

The RRTC must develop and disseminate informational materials based on knowledge gained from the Center's research activities, and disseminate the materials to persons with disabilities, their representatives, service providers, and other interested parties.

The RRTC must involve individuals with disabilities and, if appropriate, their representatives, in planning and implementing its research, training, and dissemination activities, and in evaluating the Center.

The RRTC must conduct a state-of-the-science conference and publish a comprehensive report on the final outcomes of the conference. The report must be published in the fourth year of the grant.

Priorities:

Under 34 CFR 75.105(c)(3), the Secretary proposes to give an absolute preference to applications that meet the following priorities. The Secretary proposes to fund under this competition only applications that meet one of these absolute priorities.

Priority 1: Aging With Mental Retardation

Background

There are an estimated 550,000 adults 40 years and older with mental retardation (McNeil, J., ''Special Report on Mental Retardation and Mental Illness,'' Bureau of the Census, Survey of Income and Program Participation, 1997). This population has aging-related health and social care needs specific to their condition (McCarthy, J. and Mullan, E., ''The Elderly with a Learning Disability (Mental Retardation): An Overview,'' *International Psychogeriatrics,* 8 (3), pgs. 489–501, 1996).

Current research has begun to identify secondary conditions that are causally related to aging with mental retardation. For instance, there is evidence that persons aging with mental retardation and a lifelong history of certain medications (e.g., psychotropic, anti-seizure) have a higher risk of developing secondary conditions such as osteoporosis or tardive dyskinesia (Adlin, M., ''Health Care Issues,'' *Older Adults with Developmental Disabilities: Optimizing Choice and Change,* Baltimore, Paul H. Brookes Pub. Co., pgs. 49–60, 1993). Persons with Downs Syndrome have a higher prevalence of Alzheimer's disease at an earlier age than the general population (Janicki, M., ''Practice Guidelines for the Clinical Assessment and Care Management of Alzheimer's Disease and Other Dementias Among Adults with Intellectual Disability,'' *Journal of Intellectual Disability Research,* 40, pgs. 374–382, 1996). In addition, persons aging with mental retardation experience aging-related conditions like hypertension, osteoarthritis, heart disease, obesity, and high cholesterol levels. Treating such conditions in persons aging with mental retardation is complicated by difficulty in communicating about nutrition, exercise, and prescribed treatment protocols (Edgerton, R. ''Some People Know How to Be Old,'' *Life Course Perspectives on Adulthood and Old Age,* American Association on Mental Retardation Monograph Series, pgs. 53–66, 1994) and by poor health maintenance practices (Edgerton, R. et al., ''Health Care for Aging People with

Mental Retardation,'' *Mental Retardation*, 32 (2), pgs. 146–150, April, 1994).

The health status and needs of older women with mental retardation have received little research attention and merit special consideration. We have limited information on the availability of screening for breast or cervical cancers, onset and reactions to menopause, and treatment for osteoporosis in menopausal and post-menopausal women, or the general health status of women with mental retardation as they age (Murphy, L., *Aging with Developmental Disabilities: Women's Health Issues*, Texas Arc, 1997).

Approximately 80 percent of adults with mental retardation live at home, often with their families of origin, and many are known to the service system (Seltzer, M., ''Aging Parents with Co-Resident Adult Children: The Impact of Lifelong Caregiving,'' *Life Course Perspectives on Adulthood and Old Age*, American Association on Mental Retardation, pgs. 3–18, 1994). A major issue facing older family caregivers is planning for the future of their children aging with mental retardation. A shortage of alternative living arrangements and the aging of family members contribute to this concern (Heller, T., ''Support Systems, Well-being, and Placement Decision-making Among *Older Parents and Their Adult Children with Developmental Disabilities,'' Older Adults with Developmental Disabilities; Optimizing Choice and Change*, pgs. 107–122, 1993). For many families, planning for the future financial needs of their members with mental retardation is a particular concern.

There has been little research examining family caregiving throughout the life of the person aging with mental retardation, particularly analysis of sibling roles in the caregiving process. Cross-sectional studies have suggested that older family caregivers perceive less personal burden than do younger caregivers (Hayden, M., ''Support, Problem-Solving/Coping Ability, and Personal Burden of Younger and Older Caregivers of Adults with Mental Retardation,'' *Mental Retardation*, 35, pgs. 364–372, 1997). With increasing age, there appears to be greater acceptance of the family member and greater reciprocity in caregiving as the child with mental retardation takes on caregiving roles with aging parents (Heller, T., ''Adults with Mental Retardation as Supports to their Parents: Effects on Parental Caregiving Appraisal,'' *Mental Retardation*, 35, pgs. 338–346, 1997).

For adults living in residential settings, family involvement has been low. However, such involvement has many benefits for the adult including increasing social interaction, oversight of residential conditions, provision of recreational opportunities, assistance with financial planning activities (Feinstein, C., ''A Survey of Family Satisfaction with Regional Treatment Centers and Community Services to Persons with Mental Retardation in Minnesota,'' Philadelphia: Conroy and Feinstein Associates, 1988). Older adults with mental retardation have lower rates of family involvement than younger adults (Hill, B., *Living in the Community: A Comparative Study of Foster Homes and Small Group Homes for People with Mental Retardation*, Minneapolis: University of Minnesota, Center for Residential and Community Services, 1989).

Approximately 40 percent of working age persons with mental retardation work outside the home (McNeil, J., ''Current Population Reports: Americans With Disabilities,'' U.S. Census Bureau, P70–61, 1997). Research indicates that as persons with mental retardation grow older, they experience new work-related problems because of functional decline and changing job requirements. Furthermore, many individuals with mental retardation and their employers are unaware of the resources and services available to help them solve these problems (Parent, W., ''Social Integration in the Workplace; An Analysis of the Interaction Activities of Workers with Mental Retardation and their Co-workers,'' *Education and Training in Mental Retardation*, 27, pgs. 28–37, 1992).

Many individuals aging with mental retardation have limited access to assistive technology that might help them cope with aging-related functional limitations such as decreased mobility. Assistive technology has generally been underutilized by persons with mental retardation of all ages because few devices successfully incorporate accommodations that assist persons with cognitive impairments in their use (Wehmeyer, M., ''The Use of Assistive Technology by People with Mental Retardation and Barriers to This Outcome: A Pilot Study,'' *Technology and Disability*, 4, pgs. 195–204, 1995). Also, staff and families often are insufficiently aware of assistive technology solutions or of options for its funding.

Information on health care utilization rates and educational and employment status of persons with mental retardation is not readily available. Although a number of Federal agencies, some States, and private research institutions collect mental retardation data, too often these data are unanalyzed. Secondary analysis of existing data on mental retardation would help identify research questions and gaps in service for persons with mental retardation and their families.

Priority 1

The Secretary will establish an RRTC on Aging with Mental Retardation to assist individuals aging with mental retardation and their families to prevent secondary conditions, maintain general overall health, plan for the future, and maximize independence. The RRTC shall:

(1) Identify, develop, and evaluate programs that promote health, including early recognition and treatment of secondary conditions, with special emphasis on the needs of women aging with mental retardation;

(2) Investigate determinants of the role played by the family of origin in providing care for persons aging with mental retardation, with special emphasis on adults in residential settings and the role of siblings in the caregiving process;

(3) Identify, develop, and evaluate techniques that assist individuals with mental retardation and their families to plan for future needs, including future financial needs;

(4) Analyze and disseminate information from national data sets and public health surveillance data on adults with mental retardation to identify health care utilization, educational, and employment patterns;

(5) Identify, develop, and evaluate accommodations that help maintain employment;

(6) Identify best practices in the use of assistive technology or universal design to compensate for physical and psychological consequences of aging with mental retardation.

In carrying out these purposes, the RRTC must:

- Coordinate with other relevant research and demonstration activities sponsored by the National Center on Medical Rehabilitation Research at the National Institutes of Health, the National Institute on Mental Health, the National Institute on Aging, the Rehabilitation Services Administration, the Department of Veteran Affairs, the Social Security Administration, the Health Care Financing Administration, and the Rehabilitation Research Training Centers on Managed Care and Personal Assistance Services; and
- Address issues of consumer choice or self-direction in all of the activities except the fourth activity.

Priority 2: Disability Statistics

Background

A number of Federal, State, and private agencies collect information on persons with disabilities. While some of this information is analyzed, significant amounts of unanalyzed data are generated. The National Health Interview Survey, the Survey of Income and Program Participation, the California Work and Health Survey, other surveys, population data, information on program participation, data on institutions, and market research profiles provide many indicators about the lives of persons with disabilities. Policy makers, program directors, and others need information on the incidence, prevalence and distribution of disabilities, as well as the integration of persons with disabilities into society. Likewise, reliable information on use of services such as long-term care, transportation, vocational rehabilitation and personal care assistance is extremely valuable to individuals with disabilities and their organizations, planners, researchers and policy makers.

The 1994–95 National Health Interview Survey on Disability (NHIS–D) conducted by the National Center for Health Statistics was developed, in part, to meet the demands for data from numerous agencies (Verbrugee, L. M., ''The Disability Supplement to the 1994–95 National Health Interview Survey,'' for the National Center for Health Statistics). The 1994–95 NHIS–D offers an excellent opportunity to analyze many variables related to persons with disabilities. Researchers can use the NHIS–D to determine access to health care and personal services, use of assistive technologies, and community participation, among other key descriptors.

The major Federal agencies that routinely collect information on disability publish only a small fraction of statistical information derived from that data. Most agency data collections are driven by statutory requirements and agencies report statistics about receipt of program services and subsets of eligible individuals. These constraints limit the usefulness of the data that are collected. Easier access to a full range of data on disability for policy makers and others may be assured, in part, by providing a central resource for disability statistics and information and an organized and comprehensive system for the collection, analysis, and synthesis of the data. A disability statistics center can use existing data to conduct meta-analyses focused on problems such as employment, use of health care and social services, household situations, family composition, and educational levels.

Researchers, policy makers and others have begun to work within the framework of the ''New Paradigm of Disability,'' a contextual model of disability that recognizes the role of the built environment and of social and cultural factors in the disablement-enablement process. Most national surveys fail to measure the role of environmental factors in the operational definitions of disability used, tending to focus solely on health problems as the locus of disability. (Kirchner, C., ''Looking Under the Streetlamp: Inappropriate Use of Measures Just Because They Are There'' *Journal of Disability Policy Studies*, 7:77–90. 1996). The Americans with Disabilities Act (ADA) emphasizes barrier removal, accessibility, and reasonable accommodations. Barriers may be physical or may involve programmatic exclusions and other social obstacles. Despite increasing recognition that data systems must be enhanced to meet newly developing information needs, such as those suggested by the New Paradigm of Disability and the ADA, there is a lack of environmental measures that have been tested for accuracy and reliability. This has been an impediment to the development of survey and census measures of disability at the national and State levels.

New survey measures must be developed to accurately and reliably depict disability in the context of individual health and environmental factors. The resulting questions must take into account the interaction between the individual and the environment and examine the effects of that interaction on the ability to carry out daily activities and normative social roles. This includes examination of the immediate living arrangements of the person's household and the larger community environment. Architectural accessibility features, assistive technologies, transportation, and other accommodations and supports must be addressed.

With increased global interest in disability, researchers must be aware of new developments in the World Health Organization sponsored International Committee on Impairments, Disabilities, and Handicaps, and consider international data sets for purposes of comparison with U.S. data and, as appropriate, to generate hypotheses to be tested against U.S. data.

Given these needs and opportunities in the promotion and use of disability statistics, a Center that can identify major sources and perform secondary analyses of existing data, including meta-analyses on important topics, will be a cornerstone of a future disability data initiative. The Center can also contribute to the future of disability research through the development, testing, and dissemination of data collection items that address the New Paradigm of Disability.

Priority 2

The Secretary will establish an RRTC to improve collection and analysis of disability statistics to guide development of disability policies. The RRTC shall:

(1) Conduct secondary analyses of critical and relevant data sets, including estimates of the incidence, prevalence, and distribution of various disabilities, and disseminate analytical reports;

(2) Develop new measures, designed for inclusion in general population surveys, addressing the effect of physical, policy, and social environments on persons with disabilities; and disseminate these to survey designers, researchers, and statistical agencies;

(3) Conduct meta-analyses on key variables such as, but not limited to, employment, income and health status, using a range of relevant existing data sets on disability; and analyze the policy implications based upon the results of these analyses;

(4) Identify major gaps in demographic and program data on the disabled population and develop strategies for addressing those gaps; and

(5) Serve as a resource to researchers, consumers and consumer groups, planners, and policy makers for statistical information on disability and develop and implement a marketing plan to support dissemination of that information.

In carrying out the purposes of the priority, the RRTC must coordinate with relevant activities sponsored by the Centers for Disease Control and Prevention, the Office of the Assistant Secretary for Planning and Evaluation in the Department of Health and Human Services, the Bureau of the Census, the Department of Labor, and the National Institutes of Health.

Electronic Access to This Document

Anyone may view this document, as well as all other Department of Education documents published in the **Federal Register**, in text or portable document format (pdf) on the World

Wide Web at either of the following sites:

http://ocfo.ed.gov/fedreg.htm

http://www.ed.gov/news.html

To use the pdf you must have the Adobe Acrobat Reader Program with Search, which is available free at either of the preceding sites. If you have questions about using the pdf, call the U.S. Government Printing Office at (202) 512–1530 or, toll free at 1–888–293–6498.

Anyone may also view these documents in text copy only on an electronic bulletin board of the Department. Telephone: (202) 219–1511 or, toll free, 1–800–222–4922. The documents are located under Option G—Files/Announcements, Bulletins and Press Releases.

Note: The official version of this document is the document published in the **Federal Register**.

Applicable Program Regulations: 34 CFR Parts 350.

Program Authority: 29 U.S.C. 760–762.

(Catalog of Federal Domestic Assistance Numbers 84.133B, Rehabilitation Research and Training Centers)

Dated: June 23, 1998.

Judith E. Heumann,

Assistant Secretary for Special Education and Rehabilitative Services.

[FR Doc. 98–17113 Filed 6–26–98; 8:45 am]

BILLING CODE 4000–01–P

DEPARTMENT OF EDUCATION

[CFDA No.: 84.133B]

Office of Special Education and Rehabilitative Services; National Institute on Disability and Rehabilitation Research; Notice Inviting Applications for New Rehabilitation Research and Training Centers for Fiscal Year (FY) 1998

Note to Applicants: This notice is a complete application package. Together with the statute authorizing the programs and applicable regulations governing the programs, including the Education Department General Administrative Regulations (EDGAR), this notice contains information, application forms, and instructions needed to apply for a grant under these competitions.

This program supports the National Education Goal that calls for all Americans to possess the knowledge and skills necessary to compete in a global economy and exercise the rights and responsibilities of citizenship.

The estimated funding levels in this notice do not bind the Department of Education to make awards in any of these categories, or to any specific number of awards or funding levels, unless otherwise specified in statute.

Applicable Regulations: The Education Department General Administrative Regulations (EDGAR), 34 CFR Parts 74, 75, 77, 80, 81, 82, 85, and 86; and Disability and Rehabilitation Research Projects and Centers—34 CFR Part 350, particularly *Rehabilitation Research and Training Centers* in Subpart C.

Program Title: Rehabilitation Research and Training Centers (RRTCs).

CFDA Number: 84.133B.

Purpose of Program: RRTCs conduct coordinated and advanced programs or research on disability and rehabilitation that will produce new knowledge that will improve rehabilitation methods and service delivery systems, alleviate or stabilize disabling conditions, and promote maximum social and economic independence for individuals with disabilities. RRTCs provide training to service providers at the pre-service, in-service training, undergraduate, and graduate levels, to improve the quality and effectiveness of rehabilitation services. They also provide advanced research training to individuals with disabilities and those from minority backgrounds engaged in research on disability and rehabilitation. RRTCs serve as national and regional technical assistance resources and provide training for service providers, individuals with disabilities and families and representatives, and rehabilitation researchers.

Eligible Applicants: Parties eligible to apply for grants under this program are States, public or private agencies, including for-profit agencies, public or private organizations, including for-profit organizations, institutions of higher education, and Indian tribes and tribal organizations.

Program Authority: 29 U.S.C. 762.

APPLICATION NOTICE FOR FISCAL YEAR 1998, REHABILITATION RESEARCH AND TRAINING CENTERS, CFDA NO. 84–133B

Funding priority	Deadline for transmittal of applications	Estimated number of awards	Maximum award amount (per year)*	Project period (months)
Aging with mental retardation	8/28/98	1	$700,000	60
Disability statistics	8/28/98	1	700,000	60

***Note:** The Secretary will reject without consideration or evaluation any application that proposes a project funding level that exceeds the stated maximum award amount per year (See 34 CFR 75.104(b)).

RRTC Selection Criteria: The Secretary uses the following selection criteria to evaluate applications for RRTCs on aging with mental retardation and disability statistics under the Disability and Rehabilitation Research Project and Centers Program.

(a) *Importance of the problem* (9 points total).

(1) The Secretary considers the importance of the problem.

(2) In determining the importance of the problem, the Secretary considers the following factors:

(i) The extent to which the applicant clearly describes the need and target population (3 points).

(ii) The extent to which the proposed activities address a significant need of those who provide services to individuals with disabilities (3 points).

(iii) The extent to which the proposed project will have beneficial impact on the target population (3 points).

(b) *Responsiveness to an absolute or competitive priority* (4 points total).

(1) The Secretary considers the responsiveness of the application to the absolute or competitive priority published in the **Federal Register**.

(2) In determining the responsiveness of the application to the absolute or competitive priority, the Secretary considers the following factors:

(i) The extent to which the applicant addresses all requirements of the absolute or competitive priority (2 points).

(ii) The extent to which the applicant's proposed activities are likely to achieve the purposes of the absolute or competitive priority (2 points).

(c) *Design of research activities* (35 points total).

(1) The Secretary considers the extent to which the design of research activities is likely to be effective in accomplishing the objectives of the project.

(2) In determining the extent to which the design is likely to be effective in accomplishing the objectives of the

project, the Secretary considers the following factors:

(i) The extent to which the research activities constitute a coherent, sustained approach to research in the field, including a substantial addition to the state-of-the-art (5 points).

(ii) The extent to which the methodology of each proposed research activity is meritorious, including consideration of the extent to which—

(A) The proposed design includes a comprehensive and informed review of the current literature, demonstrating knowledge of the state-of-the-art (5 points);

(B) Each research hypothesis is theoretically sound and based on current knowledge (5 points);

(C) Each sample population is appropriate and of sufficient size (5 points);

(D) The data collection and measurement techniques are appropriate and likely to be effective (5 points); and

(E) The data analysis methods are appropriate (5 points).

(iii) The extent to which anticipated research results are likely to satisfy the original hypotheses and could be used for planning additional research, including generation of new hypotheses where applicable (5 points).

(d) *Design of training activities* (11 points total).

(1) The Secretary considers the extent to which the design of training activities is likely to be effective in accomplishing the objectives of the project.

(2) In determining the extent to which the design is likely to be effective in accomplishing the objectives of the project, the Secretary considers the following factors:

(i) The extent to which the proposed training materials are likely to be effective, including consideration of their quality, clarity, and variety (2 points).

(ii) The extent to which the proposed training methods are of sufficient quality, intensity, and duration (2 points).

(iii) The extent to which the proposed training content—

(A) Covers all of the relevant aspects of the subject matter (1 point); and

(B) If relevant, is based on new knowledge derived from research activities of the proposed project (1 point).

(iv) The extent to which the proposed training materials, methods, and content are appropriate to the trainees, including consideration of the skill level of the trainees and the subject matter of the materials (2 points).

(v) The extent to which the proposed training materials and methods are accessible to individuals with disabilities (1 point).

(vi) The extent to which the applicant is able to carry out the training activities, either directly or through another entity (2 points).

(e) *Design of dissemination activities* (8 points total).

(1) The Secretary considers the extent to which the design of dissemination activities is likely to be effective in accomplishing the objectives of the project.

(2) In determining the extent to which the design is likely to be effective in accomplishing the objectives of the project, the Secretary considers the following factors:

(i) The extent to which the content of the information to be disseminated—

(A) Covers all of the relevant aspects of the subject matter (1 point); and

(B) If appropriate, is based on new knowledge derived from research activities of the project (1 point).

(ii) The extent to which the materials to be disseminated are likely to be effective and usable, including consideration of their quality, clarity, variety, and format (2 points).

(iii) The extent to which the methods for dissemination are of sufficient quality, intensity, and duration (2 points).

(iv) The extent to which the materials and information to be disseminated and the methods for dissemination are appropriate to the target population, including consideration of the familiarity of the target population with the subject matter, format of the information, and subject matter (1 point).

(v) The extent to which the information to be disseminated will be accessible to individuals with disabilities (1 point).

(f) *Design of technical assistance activities* (4 points total).

(1) The Secretary considers the extent to which the design of technical assistance activities is likely to be effective in accomplishing the objectives of the project.

(2) In determining the extent to which the design is likely to be effective in accomplishing the objectives of the project, the Secretary considers the following factors:

(i) The extent to which the methods for providing technical assistance are of sufficient quality, intensity, and duration (1 point).

(ii) The extent to which the information to be provided through technical assistance covers all of the relevant aspects of the subject matter (1 point).

(iii) The extent to which the technical assistance is appropriate to the target population, including consideration of the knowledge level of the target population, needs of the target population, and format for providing information (1 point).

(iv) The extent to which the technical assistance is accessible to individuals with disabilities (1 point).

(g) *Plan of operation* (4 points total).

(1) The Secretary considers the quality of the plan of operation.

(2) In determining the quality of the plan of operation, the Secretary considers the following factors:

(i) The adequacy of the plan of operation to achieve the objectives of the proposed project on time and within budget, including clearly defined responsibilities, and timelines for accomplishing project tasks (2 points).

(ii) The adequacy of the plan of operation to provide for using resources, equipment, and personnel to achieve each objective (2 points).

(f) *Collaboration* (2 points total).

(1) The Secretary considers the quality of collaboration.

(2) In determining the quality of collaboration, the Secretary considers the following factors:

(i) The extent to which the applicant's proposed collaboration with one or more agencies, organizations, or institutions is likely to be effective in achieving the relevant proposed activities of the project (1 point).

(ii) The extent to which agencies, organizations, or institutions demonstrate a commitment to collaborate with the applicant (1 point).

(g) Adequacy and reasonableness of the budget (3 points total).

(1) The Secretary considers the adequacy and the reasonableness of the proposed budget.

(2) In determining the adequacy and the reasonableness of the proposed budget, the Secretary considers the following factors:

(i) The extent to which the costs are reasonable in relation to the proposed project activities (1 point).

(ii) The extent to which the budget for the project, including any subcontracts, is adequately justified to support the proposed project activities (2 points).

(h) *Plan of evaluation* (7 points total).

(1) The Secretary considers the quality of the plan of evaluation.

(2) In determining the quality of the plan of evaluation, the Secretary considers the following factors:

(i) The extent to which the plan of evaluation provides for periodic assessment of progress toward—

(A) Implementing the plan of operation (1 point); and

(B) Achieving the project's intended outcomes and expected impacts (1 point).

(ii) The extent to which the plan of evaluation will be used to improve the performance of the project through the feedback generated by its periodic assessments (1 point).

(iii) The extent to which the plan of evaluation provides for periodic assessment of a project's progress that is based on identified performance measures that—

(A) Are clearly related to the intended outcomes of the project and expected impacts on the target population (2 points); and

(B) Are objective, and quantifiable or qualitative, as appropriate (2 points).

(i) *Project staff* (9 points total).

(1) The Secretary considers the quality of the project staff.

(2) In determining the quality of the project staff, the Secretary considers the extent to which the applicant encourages applications for employment from persons who are members of groups that have traditionally been underrepresented based on race, color, national origin, gender, age, or disability (1 point).

(3) In addition, the Secretary considers the following factors:

(i) The extent to which the key personnel and other key staff have appropriate training and experience in disciplines required to conduct all proposed activities (2 points).

(ii) The extent to which the commitment of staff time is adequate to accomplish all the proposed activities of the project (2 points).

(iii) The extent to which the key personnel are knowledgeable about the methodology and literature of pertinent subject areas (2 points).

(iv) The extent to which the project staff includes outstanding scientists in the field (2 points).

(j) *Adequacy and accessibility of resources* (4 points).

(1) The Secretary considers the adequacy and accessibility of the applicant's resources to implement the proposed project.

(2) In determining the adequacy and accessibility of resources, the Secretary considers the following factors:

(i) The extent to which the applicant is committed to provide adequate facilities, equipment, other resources, including administrative support, and laboratories, if appropriate (1 point).

(ii) The extent to which the applicant has appropriate access to clinical populations and organizations representing individuals with disabilities to support advanced clinical rehabilitation research (2 points).

(iii) The extent to which the facilities, equipment, and other resources are appropriately accessible to individuals with disabilities who may use the facilities, equipment, and other resources of the project (1 point).

Instructions for Application Narrative

The Secretary strongly recommends that applicants:

(1) Include a one-page abstract in their application;

(2) Limit Part III—Application Narrative to no more than 125 double-spaced 8½ x 11″ pages (on one side only) with one inch margins (top, bottom, and sides);

(3) Double-space (no more than 3 lines per vertical inch) all sections of text in the application narrative; and

(4) Use no smaller than a 12-point font, and an average character density no greater than 14 characters per inch.

The recommended application narrative page limit does not apply to: Part I—the electronically scannable form; Part II—the budget section (including the narrative budget justification); and Part IV—the assurances and certifications. Also, the one-page abstract, resume(s), bibliography, or letters of support, while considered part of the application, are not subject to the recommended page limitation. Applicants should note that reviewers are not required to review any information provided in addition to the application information listed above.

The recommendations for double-spacing and font do not apply within charts, tables, figures, and graphs, but the information presented in those formats should be easily readable.

Instructions for Transmittal of Applications

(a) If an applicant wants to apply for a grant, the applicant shall—

(1) Mail the original and two copies of the application on or before the deadline date to: U.S. Department of Education, Application Control Center, Attention: (CFDA # [Applicant must insert number and letter]), Washington, D.C. 20202–4725, or

(2) Hand deliver the original and two copies of the application by 4:30 p.m. [Washington, D.C. time] on or before the deadline date to: U.S. Department of Education, Application Control Center, Attention: (CFDA # [Applicant must insert number and letter]), Room #3633, Regional Office Building⁄3, 7th and D Streets, S.W., Washington, D.C.

(b) An applicant must show one of the following as proof of mailing:

(1) A legibly dated U.S. Postal Service postmark.

(2) A legible mail receipt with the date of mailing stamped by the U.S. Postal Service.

(3) A dated shipping label, invoice, or receipt from a commercial carrier.

(4) Any other proof of mailing acceptable to the Secretary.

(c) If an application is mailed through the U.S. Postal Service, the Secretary does not accept either of the following as proof of mailing:

(1) A private metered postmark.

(2) A mail receipt that is not dated by the U.S. Postal Service.

Notes: (1) The U.S. Postal Service does not uniformly provide a dated postmark. Before relying on this method, an applicant should check with its local post office.

(2) An applicant wishing to know that its application has been received by the Department must include with the application a stamped self-addressed postcard containing the CFDA number and title of this program.

(3) The applicant *must* indicate on the envelope and—if not provided by the Department—in Item 10 of the Application for Federal Assistance (Standard Form 424) the CFDA number—and letter, if any—of the competition under which the application is being submitted.

Application Forms and Instructions

The appendix to this application is divided into four parts. These parts are organized in the same manner that the submitted application should be organized. These parts are as follows:

Part I: Application for Federal Assistance (Standard Form 424 (Rev. 4–88)) and instructions.

Part II: Budget Form—Non-Construction Programs (Standard Form 524A) and instructions.

Part III: Application Narrative.

Additional Materials

Estimated Public Reporting Burden.

Assurances—Non-Construction Programs (Standard Form 424B).

Certification Regarding Lobbying, Debarment, Suspension, and Other Responsibility Matters: and Drug-Free Work-Place Requirements (ED Form 80–0013).

Certification Regarding Debarment, Suspension, Ineligibility and Voluntary Exclusion: Lower Tier Covered Transactions (ED Form 80–0014) and instructions. (Note: ED Form GCS–014 is intended for the use of primary participants and should not be transmitted to the Department.)

Disclosure of Lobbying Activities (Standard Form LLL (if applicable) and instructions; and Disclosure Lobbying Activities Continuation Sheet (Standard Form LLL–A).

An applicant may submit information on a photostatic copy of the application and budget forms, the assurances, and the certifications. However, the application form, the assurances, and the certifications must each have an *original signature*. No grant may be

awarded unless a completed application form has been received.

For Applications Contact: The Grants and Contracts Service Team (GCST), Department of Education, 600 Independence Avenue S.W., Switzer Building, 3317, Washington, D.C. 20202, or call (202) 205–8207. Individuals who use a telecommunications device for the deaf (TDD) may call the TDD number at (202) 205–9860. The preferred method for requesting information is to FAX your request to (202) 205–8717.

Individuals with disabilities may obtain a copy of the application package in an alternate format by contacting the GCST. However, the Department is not able to reproduce in an alternate format the standard forms included in the application package.

FOR FURTHER INFORMATION CONTACT: Donna Nangle, U.S. Department of Education, 600 Maryland Avenue, S.W., room 3418, Switzer Building, Washington, D.C. 20202–2645. Telephone: (202) 205-5880. Individuals who use a telecommunications device for the deaf (TDD) may call the TDD number at (202) 205–5516. Internet: Donna__Nangle@ed.gov.

Individuals with disabilities may obtain this document in an alternate format (e.g., Braille, large print, audiotape, or computer diskette) on request to the contact person listed in the preceding paragraph.

Electronic Access to This Document

Anyone may view this document, as well as all other Department of Education documents published in the **Federal Register**, in text or portable document format (pdf) on the World Wide Web at either of the following sites:

http://ocfo.ed.gov/fedreg.htm
http://www.ed.gov/news.html

To use the pdf you must have the Adobe Acrobat Reader Program with Search, which is available free at either of the preceding sites. If you have questions about using the pdf, call the U.S. Government Printing Office at (202) 512–1530 or, toll free at 1–888–293–6498.

Anyone may also view these documents in text copy only on an electronic bulletin board of the Department. Telephone: (202) 219–1511 or, toll free, 1–800–222–4922. The documents are located under Option G—Files/Announcements, Bulletins and Press Releases.

Note: The official version of this document is the document published in the **Federal Register**.

Program Authority: 29 U.S.C. 760–762.

Dated: June 23, 1998.

Judith E. Heumann,

Assistant Secretary for Special Education and Rehabilitative Services.

Appendix—Application Forms and Instructions

Applicants are advised to reproduce and complete the application forms in this section. Applicants are required to submit an original and two copies of each application as provided in this section. However, applicants are encouraged to submit an original and seven copies of each application in order to facilitate the peer review process and minimize copying errors.

Frequent Questions

1. Can I Get an Extension of the Due Date?

No! On rare occasions the Department of Education may extend a closing date for all applicants. If that occurs, a notice of the revised due date is published in the **Federal Register**. However, there are no extensions or exceptions to the due date made for individual applicants.

2. What Should Be Included in the Application?

The application should include a project narrative, vitae of key personnel, and a budget, as well as the Assurances forms included in this package. Vitae of staff or consultants should include the individual's title and role in the proposed project, and other information that is specifically pertinent to this proposed project. The budgets for both the first year and all subsequent project years should be included.

If collaboration with another organization is involved in the proposed activity, the application should include assurances of participation by the other parties, including written agreements or assurances of cooperation. It is not useful to include general letters of support or endorsement in the application.

If the applicant proposes to use unique tests or other measurement instruments that are not widely known in the field, it would be helpful to include the instrument in the application.

Many applications contain voluminous appendices that are not helpful and in many cases cannot even be mailed to the reviewers. It is generally not helpful to include such things as brochures, general capability statements of collaborating organizations, maps, copies of publications, or descriptions of other projects completed by the applicant.

3. What Format Should Be Used for the Application?

NIDRR generally advises applicants that they may organize the application to follow the selection criteria that will be used. The specific review criteria vary according to the specific program and are contained in this Consolidated Application Package.

4. May I Submit Applications to More Than One NIDRR Program Competition or More Than One Application to a Program?

Yes, you may submit applications to any program for which they are responsive to the program requirements. You may submit the same application to as many competitions as you believe appropriate. You may also submit more than one application in any given competition.

5. What Is the Allowable Indirect Cost Rate?

The limits on indirect costs vary according to the program and the type of application.

An applicant for an RRTC is limited to an indirect cost rate of 15 percent.

6. Can Profitmaking Businesses Apply for Grants?

Yes. However, for-profit organizations will not be able to collect a fee or profit on the grant, and in some programs will be required to share in the costs of the project.

7. Can Individuals Apply for Grants?

No. Only organizations are eligible to apply for grants under NIDRR programs. However, individuals are the only entities eligible to apply for fellowships.

8. Can NIDRR Staff Advise Me Whether My Project Is of Interest to NIDRR or Likely To Be Funded?

No. NIDRR staff can advise you of the requirements of the program in which you propose to submit your application. However, staff cannot advise you of whether your subject area or proposed approach is likely to receive approval.

9. How do I Assure That My Application Will Be Referred to the Most Appropriate Panel for Review?

Applicants should be sure that their applications are referred to the correct competition by clearly including the competition title and CFDA number, including alphabetical code, on the Standard Form 424, and including a project title that describes the project.

10. How Soon After Submitting my Application Can I Find out If It Will Be Funded?

The time from closing date to grant award date varies from program to program. Generally speaking, NIDRR endeavors to have awards made within five to six months of the closing date. Unsuccessful applicants generally will be notified within that time frame as well. For the purpose of estimating a project start date, the applicant should estimate approximately six months from the closing date, but no later than the following September 30.

11. Can I Call NIDRR to Find Out If My Application Is Being Funded?

No. When NIDRR is able to release information on the status of grant applications, it will notify applicants by letter. The results of the peer review cannot be released except through this formal notification.

12. If My Application Is Successful, Can I Assume I Will Get the Requested Budget Amount in Subsequent Years?

No. Funding in subsequent years is subject to availability of funds and project performance.

13. Will All Approved Applications Be Funded?

No. It often happens that the peer review panels approve for funding more applications

than NIDRR can fund within available resources. Applicants who are approved but not funded are encouraged to consider submitting similar applications in future competitions.

BILLING CODE 4000–01–P

APPLICATION FOR FEDERAL ASSISTANCE

2. DATE SUBMITTED

Application Identifier

1. TYPE OF SUBMISSION
- ❑ Construction
- ❑ Non-Construction

Preapplication:
- ❑ Construction
- ❑ Nonconstruction

3. DATE RECEIVED BY STATE

State Application Identifier

4. DATE RECEIVED BY FEDERAL AGENCY

Federal Identifier

5. APPLICANT INFORMATION

Legal Name:

Organizational Unit:

Address (Give city, county, state, and zip code):

Name and telephone number of the person to be contacted on matters involving this application (give area code)

6. Employer Identification Number: ___ - _____

7. TYPE OF APPLICATION:
(enter appropriate letter here) ❑

A. State
B. County
C. Municipal
D. Township
E. Interstate
F. Intermunicipal
G. Special District
H. Independent School Dist.
I. State Cont. I of HL
J. Private University
K. Indian tribe
L. Individual
M. Profit Org.
N. Other (Specify) _____

8. TYPE OF APPLICATION
- ❑ New
- ❑ Continuation
- ❑ Revision

If Revision, enter appropriate letter(s) here: ❑ ❑

A. Increase Award
B. Decrease Award
C. Increase Duration
D. Decrease Duration
Other (specify)

9. NAME OF FEDERAL AGENCY

10. CATALOG OF FEDERAL DOMESTIC ASSISTANCE NUMBER: 84.
Title:

11. DESCRIPTIVE TITLE OF APPLICANT'S PROJECT:

12. AREAS AFFECTED BY PROJECT (cities, counties, states, etc.):

13. PROPOSED PROJECT:

Start Date:

Ending Date:

14. CONGRESSIONAL DISTRICTS OF:

a. Applicant:

b. Project:

15. ESTIMATED FUNDING

a.	Federal	$ .00
b.	Applicant	$ .00
c.	State	$ .00
d.	Local	$ .00
e.	Other	$ .00
f.	Program Income	$ .00
g.	TOTAL	$ .00

16. IS APPLICANT SUBJECT TO REVIEW BY STATE EXECUTIVE ORDER 12372 PROCESS?

a. YES ❑ THIS PREAPPLICATION /APPLICATION WAS MADE AVAILABLE TO THE STATE EXECUTIVE ORDER 12372 PROCESS FOR REVIEW ON DATE _____

b. NO ❑ PROGRAM IS NOT COVERED BY E.O. 12372

❑ OR PROGRAM HAS NOT BEEN SELECTED BY STATE FOR REVIEW

17. IS THE APPLICANT DELINQUENT ON ANY FEDERAL DEBT?

❑ Yes If "Yes" attach an explanation

❑ No

18. TO THE BEST OF MY KNOWLEDGE AND BELIEF, ALL DATA IN THIS APPLICATION/PREAPPLICATION ARE TRUE AND CORRECT. THE DOCUMENT HAS BEEN DULY AUTHORIZED BY THE GOVERNING BODY OF THE APPLICANT AND THE APPLICANT WILL COMPLY WITH THE ATTACHED ASSURANCES IF THE ASSISTANCE IS AWARDED.

a. Typed Name of Authorized Representative

b. Title:

c. Telephone Number:

d. Signature of Authorized Representative

e. Date Signed

Previous Editions Not Usable
Authorized for Local Reproduction

Standard Form 424 REV 4-88)
Prescribed by OMB Circular A-102

INSTRUCTIONS FOR THE SF 424

This is a standard form used by applicants as a required facesheet for preapplications and applications submitted for Federal assistance. It will be used by Federal agencies to obtain applicant certification that States which have established a review and comment procedure in response to Executive Order 12372 and have selected the program to be included in their process, have been given an opportunity to review the applicant's submission.

Item:	Entry:
1.	Self-explanatory.
2.	Date application submitted to Federal agency (or State if applicable) & applicants control number (if applicable).
3.	State use only (if applicable).
4.	If this application is to continue or revise an existing award, enter present Federal identifier number. If for a new project, leave blank.
5.	Legal name of applicant, name of primary organizational unit which will undertake the assistance activity, complete address of the applicant, and name and telephone number of the person to contact on matter related to this application.
6.	Enter Employer Identification Number (EIN) as assigned by the Internal Revenue Service.
7.	Enter the appropriate letter in the space provided.
8.	Check appropriate box and enter appropriate letter(s) in the space(s) provided: - "New" means a new assistance award. - "Continuation" means an extension for an additional funding/budget period for a project with a projected completion date. - "Revision" means any change in the Federal Government's financial obligation or contingent liability from an existing obligation.
9.	Name of Federal agency from which assistance is being requested with this application.
10.	Use the Catalog of Federal Domestic Assistance number and title of the program under which assistance is requested.
11.	Enter a brief descriptive title of the project, if more than one program is involved, you should append an explanation on a separate sheet. If appropriate (e.g., construction or real property projects), attach a map showing project location. For preapplications use a separate sheet to provide a summary description of this project.
12.	List the State and area (county, city, etc.) the applicant is applying to serve **with this application.**
13.	Self-explanatory.
14.	List the applicant's Congressional District and any District(s) affected by the program or project.
15.	Amount requested or to be contributed during the first funding/budget period by each contributor. Value of in-kind contributions should be included on appropriate lines as applicable. If the action will result in a dollar change to an existing award, indicate <u>only</u> the amount of the change. For decreases, enclose the amounts in parentheses. If both basic and supplemental amounts are included, show breakdown on an attached sheet. For multiple program funding, use totals and show breakdown using same categories as item 15.
16.	Applicants should contact the State Single Point of Contact (SPOC) for Federal Executive Order 12372 to determine whether the application is subject to the State intergovernmental review process.
17.	This question applies to the applicant organization, not the person who signs as the authorized representative. Categories of debt include delinquent audit disallowances, loans and taxes.
18.	To be signed by the authorized representative of the applicant. A copy of the governing body's authorization for you to sign this application as official representative must be on file in the applicant's office. (Certain Federal agencies may require that this authorization be submitted as part of the application).

U.S. DEPARTMENT OF EDUCATION

BUDGET INFORMATION

NON-CONSTRUCTION PROGRAMS

OMB Control No. 1880--0538

Expiration Date: 10/31/99

Name of Institution/Organization

Applicants requesting funding for only one year should complete the column under "Project Year 1." Applicants requesting funding for multi-year grants should complete all applicable columns. Please read all instructions before completing form.

SECTION A - BUDGET SUMMARY
U.S. DEPARTMENT OF EDUCATION FUNDS

Budget Categories	Project Year 1 (a)	Project Year 2 (b)	Project Year 3 (c)	Project Year 4 (d)	Project Year 5 (e)	**Total (f)**
1. Personnel						
2. Fringe Benefits						
3. Travel						
4. Equipment						
5. Supplies						
6. Contractual						
7. Construction						
8. Other						
9. Total Direct Costs (lines 1-8)						
10. Indirect Costs						
11. Training Stipends						
12. Total Costs (lines 9-11)						

ED FORM NO. 524

Name of Institution/Organization	Applicants requesting funding for only one year should complete the column under "Project Year 1." Applicants requesting funding for multi-year grants should complete all applicable columns. Please read all instructions before completing form.

SECTION B - BUDGET SUMMARY
NON-FEDERAL FUNDS

Budget Categories	Project Year 1 (a)	Project Year 2 (b)	Project Year 3 (c)	Project Year 4 (d)	Project Year 5 (e)	**Total (f)**
1. Personnel						
2. Fringe Benefits						
3. Travel						
4. Equipment						
5. Supplies						
6. Contractual						
7. Construction						
8. Other						
9. Total Direct Costs (lines 1-8)						
10. Indirect Costs						
11. Training Stipends						
12. Total Costs (lines 9-11)						

SECTION C - OTHER BUDGET INFORMATION (see instructions)

ED FORM NO. 524

Public reporting burden for this collection of information is estimated to vary from 13 to 22 hours per response, with an average of 17.5 hours, including the time for reviewing instructions, searching existing data sources, gathering and maintaining the data needed, and completing and reviewing the collection of information. Send comments regarding this burden estimate or any other aspect of this collection of information, including suggestions for reducing this burden, to the U.S. Department of Education, Information Management and Compliance Division, Washington, D.C. 20202-4651; and the Office of Management and Budget, Paperwork Reduction Project 1875-0102, Washington, D.C. 20503.

INSTRUCTIONS FOR ED FORM NO. 524

General Instructions

This form is used to apply to individual U.S. Department of Education discretionary grant programs. Unless directed otherwise, provide the same budget information for each year of the multi-year funding request. Pay attention to applicable program specific instructions, if attached.

Section A - Budget Summary U.S. Department of Education Funds

All applicants must complete Section A and provide a breakdown by the applicable budget categories shown in lines 1-11.

Lines 1-11, columns (a)-(e): For each project year for which funding is requested, show the total amount requested for each applicable budget category.

Lines 1-11, column (f): Show the multi-year total for each budget category. If funding is requested for only one project year, leave this column blank.

Line 12, columns (a)-(e): Show the total budget request for each project year for which funding is requested.

Line 12, column (f): Show the total amount requested for all project years. If funding is requested for only one year, leave this space blank.

Section B - Budget Summary Non-Federal Funds

If you are required to provide or volunteer to provide matching funds or other non-Federal resources to the project, these should be shown for each applicable budget category on lines 1-11 of Section B.

Lines 1-11, columns (a)-(e): For each project year for which matching funds or other contributions are provided, show the total contribution for each applicable budget category.

Lines 1-11, column (f): Show the multi-year total for each budget category. If non-Federal contributions are provided for only one year, leave this column blank.

Line 12, columns (a)-(e): Show the total matching or other contribution for each project year.

Line 12, column (f): Show the total amount to be contributed for all years of the multi-year project. If non-Federal contributions are provided for only one year, leave this space blank.

Section C - Other Budget Information Pay attention to applicable program specific instructions, if attached.

1. Provide an itemized budget breakdown, by project year, for each budget category listed in Sections A and B.

2. If applicable to this program, enter the type of indirect rate (provisional, predetermined, final or fixed) that will be in effect during the funding period. In addition, enter the estimated amount of the base to which the rate is applied, and the total indirect expense.

3. If applicable to this program, provide the rate and base on which fringe benefits are calculated.

4. Provide other explanations or comments you deem necessary.

Notice to All Applicants

Thank you for your interest in this program. The purpose of this enclosure is to inform you about a new provision in the Department of Education's General Education Provisions Act (GEPA) that applies to applicants for new grants awards under Department programs. This provision is section 427 of GEPA, enacted as part of the Improving America's Schools Act of 1994 (Pub. L. 103–382).

To Whom Does This Provision Apply?

Section 427 of GEPA affects applicants for new discretionary grant awards under this program. ALL APPLICANTS FOR NEW AWARDS MUST INCLUDE INFORMATION IN THEIR APPLICATIONS TO ADDRESS THIS NEW PROVISION IN ORDER TO RECEIVE FUNDING UNDER THIS PROGRAM.

What Does This Provision Require?

Section 427 requires each applicant for funds (other than an individual person) to include in its applications a description of the steps the applicant proposes to take to ensure equitable access to, and participation in, its federally assisted program for students, teachers, and other program beneficiaries with special needs.

This section allows applicants discretion in developing the required description. The statute highlights six types of barriers that can impede equitable access or participation that you may address: gender, race, national origin, color, disability, or age. Based on local circumstances, you can determine whether these or other barriers may prevent your students, teachers, etc. from equitable access or participation. Your description need not be lengthy; you may provide a clear and succinct description of how you plan to address those barriers that are applicable to your circumstances. In addition, the information may be provided in a single narrative, or, if appropriate, may be discussed in connection with related topics in the application.

Section 427 is not intended to duplicate the requirements of civil rights statutes, but rather to ensure that, in designing their projects, applicants for Federal funds address equity concerns that may affect the ability of certain potential beneficiaries to fully participant in the project and to achieve to high standards. Consistent with program requirements and its approved applications, an applicant may use the Federal funds awarded to it to eliminate barriers it identifies.

What Are Examples of How an Applicant Might Satisfy the Requirement of This Provision?

The following examples may help illustrate how an applicant may comply with section 427.

(1) An applicant that proposes to carry out an adult literacy project serving, among others, adults with limited English proficiency, might describe in its application how it intends to distribute a brochure about the proposed project to such potential participants in their native language.

(2) An applicant that proposes to develop instructional materials for classroom use might describe how it will make the materials available on audio tape or in braille for students who are blind.

(3) An applicant that proposes to carry out a model science program for secondary students and is concerned that girls may be less likely than boys to enroll in the course, might indicate how it intends to conduct ''outreach'' efforts to girls, to encourage their enrollment.

We recognize that many applicants may already be implementing effective steps to ensure equity of access and participation in their grant programs, and we appreciate your cooperative in responding to the requirements of this provision.

Estimated Burden Statement

According to the Paperwork Reduction Act of 1995, no persons are required to respond to a collection of information unless it displays a valid OMB control number. The valid OMB control number for this information collection is 1–801–0004 (Exp. 8/31/98). The time required to complete this information collection is estimated to vary from 1 to 3 hours per response, with an average of 1.5 hours, including the time to review instructions, search existing data resources, gather and maintain the data needed, and complete and review the information collection. If you have any comments concerning the accuracy of the time estimate(s) or suggestions for improving this form, please write to: U.S. Department of Education, Washington, DC 20202–4651.

Public reporting burden for these collections of information is estimated to average 30 hours per response, including the time for reviewing instructions, searching existing data sources, gathering and maintaining the data needed, and completing and reviewing the collection of information.

Send comments regarding this burden estimate or any other aspect of these collections of information, including suggestions for reducing this burden, to: U.S. Department of Education, Information Management and Compliance Division, Washington, D.C. 20202–4651; and Office of Management and Budget, Paperwork Reduction Project 1820–0027, Washington, D.C. 20503. *Rehabilitation Research and Training Center* (CFDA No. 84.133B) 34 CFR Part 350 Subpart C.

BILLING CODE 4000–01–C

OMB Approval No. 0348-0040

ASSURANCES- NON-CONSTRUCTION PROGRAMS

Note: Certain of these assurances may not be applicable to your project or program. If you have questions, please contact the awarding agency. Further, certain Federal awarding agencies may require applicants to certify to additional assurances. If such is the case, you will be notified.

As the duly authorized representative of the applicant I certify that the applicant:

1. Has the legal authority to apply for Federal assistance, and the institutional, managerial and financial capability (including funds sufficient to pay the non-Federal share of project costs) to ensure proper planning, management, and completion of the project described in this application.

2. Will give the awarding agency, the Comptroller General of the United States, and if appropriate, the State, through any authorized representative, access to and the right to examine all records, books, papers, or documents related to the award; and will establish a proper accounting system in accordance with generally accepted accounting standards or agency directives.

3. Will establish safeguards to prohibit employees from using their positions for a purpose that constitutes or presents the appearance of personal or organizational conflict of interest, or personal gain.

4. Will initiate and complete the work within the applicable time frame after receipt of approval of the awarding agency.

5. Will comply with the Intergovernmental Personnel Act of 1970 (42 U.S.C. §§4728-4763) relating to prescribed standards for merit systems for programs funded under one of the nineteen statutes or regulations specified in Appendix A of OPM's Standards for a Merit System of Personnel Administration (5 C.F.R. 900, Subpart F).

6. Will comply with all Federal statutes relating to nondiscrimination. These include but are not limited to: (a) Title VI of the Civil Rights Act of 1964 (P.L. 88-352) which prohibits discrimination on the basis of race, color or national origin; (b) Title IX of the Education Amendments of 1972, as amended (20 U.S.C. §§1681-1683, and 1685-1686), which prohibits discrimination on the basis of sex; (c) Section 504 of the Rehabilitation Act of 1973, as amended (29 U.S.C. §794), which prohibits discrimination on the basis of handicaps; (d) the Age Discrimination Act of 1975, as amended (42 U.S.C. §§ 6101-6107), which prohibits discrimination on the basis of age; (e) the Drug Abuse Office and Treatment Act of 1972 (P.L. 92-255), as amended, relating to nondiscrimination on the basis of drug abuse; (f) the Comprehensive Alcohol Abuse and Alcoholism Prevention, Treatment and Rehabilitation Act of 1970 (P.L. 91-616), as amended, relating to nondiscrimination on the basis of alcohol abuse or alcoholism; (g) §§ 523 and 527 of the Public Health Service Act of 1912 (42 U.S.C. 290 dd-3 and 290 ee-3), as amended, relating to confidentiality of alcohol and drug abuse patient records; (h) Title VIII of the as amended, relating to non-discrimination in the sale, rental or financing of housing; (i) any other nondiscrimination provisions in the specific statute(s) under which application for Federal assistance is being made; and (j) the requirements of any other nondiscrimination statute(s) which may apply to the application.

7. Will comply, or has already complied, with the requirements of Titles II and III of the Uniform Relocation Assistance and Real Property Acquisition Policies Act of 1970 (P.L. 91-646) which provide for fair and equitable treatment of persons displaced or whose property is acquired as a result of Federal or federally assisted programs. These requirements apply to all interests in real property acquired for project purposes regardless of Federal participation in purchases.

8. Will comply with the provisions of the Hatch Act (5 U.S.C. §§1501-1508 and 7324-7328) which limit the political activities of employees whose principal employment activities are funded in whole or in part with Federal funds.

9. Will comply, as applicable, with the provisions of the Davis-Bacon Act (40 U.S.C. §§276a to 276a-7), the Copeland Act (40 U.S.C. §276c and 18 U.S.C. §§874) and the Contract Work Hours and Safety Standards Act (40 U.S.C. §§ 327-333), regarding labor standards for federally assisted construction subagreements.

10. Will comply, if applicable, with flood insurance purchase requirements of Section 102(a) of the Flood Disaster Protection Act of 1973 (P.L. 93-234) which requires recipients in a special flood hazard area to participate in the program and to purchase flood insurance if the total cost of insurable construction and acquisition is $10,000 or more.

11. Will comply with environmental standards which may be prescribed pursuant to the following: (a) institution of environmental quality control measures under the National Environmental Policy Act of 1969 (P.L. 91-190) and Executive Order (EO) 11514; (b) notification of violating facilities pursuant to

EO 11738; (c) protection of wetlands pursuant to EO 11990; (d) evaluation of flood hazards in floodplains in accordance with EO 11988; (e) assurance of project consistency with the approved State management program developed under the Coastal Zone Management Act of 1972 (16 U.S.C. §§ 1451 et seq); (f) conformity of Federal actions to State (Clear Air) Implementation Plans under Section 176(c) of the Clear Air Act of 1955, as amended (42 U.S.C. 7401 et seq.); (g) protection of underground sources of drinking water under the Safe Drinking Water Act of 1974, as amended, (P.L. 93-523); and (h) protection of endangered species under the Endangered Species Act of 1973, as amended, (P.L. 93-205).

12. Will comply with the Wild and Scenic Rivers Act of 1968 (16 U.S.C. §§1271 et seq) related to protecting components or potential components of the national wild and scenic rivers system.

13. Will assist the awarding agency in assuring compliance with Section 106 of the National Historic Preservation Act of 1966, as amended (16 U.S.C. 470), EO 11593 (identification and protection of historic properties), and the Archaeological and Historic Preservation Act of 1974 (16 U.S.C. 469a-1 et seq.).

14. Will comply with P.L. 93-348 regarding the protection of human subjects involved in research, development, and related activities supported by this award of assistance.

15. Will comply with the Laboratory Animal Welfare Act of 1966 (P.L. 89-544, as amended, 7 U.S.C. 2131 et seq.) pertaining to the care, handling, and treatment of warm blooded animals held for research, teaching, or other activities supported by this award of assistance.

16. Will comply with the Lead-Based Paint Poisoning Prevention Act (42 U.S.C. §§ 4801 et seq.) which prohibits the use of lead based paint in construction or rehabilitation of residence structures.

17. Will cause to be performed the required financial and compliance audits in accordance with the Single Audit Act of 1984.

18. Will comply with all applicable requirements of all other Federal laws, executive orders, regulations and policies governing this program.

Signature of Authorized Certifying Official	Title	
Applicant Organization		Date Submitted

SF 424 (4-88) Back

CERTIFICATIONS REGARDING LOBBYING; DEBARMENT, SUSPENSION AND OTHER RESPONSIBILITY MATTERS; AND DRUG-FREE WORKPLACE REQUIREMENTS

Applicants should refer to the regulations cited below to determine the certification to which they are required to attest. Applicants should also review the instructions for certification included in the regulations before completing this form. Signature of this form provides for compliance with certification requirements under 34 CFR Part 82, "New Restrictions on Lobbying," and 34 CFR Part 85, "Government-wide Debarment and Suspension (Nonprocurement) and Government-wide Requirements for Drug-Free Workplace (Grants)." The certifications shall be treated as a material representation of fact upon which reliance will be placed when the Department of Education determines to award the covered transaction, grant, or cooperative agreement.

1. LOBBYING

As required by Section 1352, Title 31 of the U.S. Code, and implemented at 34 CFR Part 82, for persons entering into a grant or cooperative agreement over $100,000, as defined at 34 CFR Part 82, Sections 82.105 and 82.110, the applicant certifies that:

(a) No Federal appropriated funds have been paid or will be paid, by or on behalf of the undersigned, to any person for influencing or attempting to influence an officer or employee of any agency, a Member of Congress, an officer or employee of Congress, or an employee of a Member of Congress in connection with the making of any Federal grant, the entering into of any cooperative agreement, and the extension, continuation, renewal, amendment, or modification of any Federal grant or cooperative agreement;

(b) If any funds other than Federal appropriated funds have been paid or will be paid to any person for influencing or attempting to influence an officer or employee of any agency, a Member of Congress, an officer or employee of Congress, or an employee of a Member of Congress in connection with this Federal grant or cooperative agreement, the undersigned shall complete and submit Standard Form - LLL, "Disclosure Form to Report Lobbying," in accordance with its instructions;

(c) The undersigned shall require that the language of this certification be included in the award documents for all subawards at all tiers (including subgrants, contracts under grants and cooperative agreements, and subcontracts) and that all subrecipients shall certify and disclose accordingly.

2. DEBARMENT, SUSPENSION, AND OTHER RESPONSIBILITY MATTERS

As required by Executive Order 12549, Debarment and Suspension, and implemented at 34 CFR Part 85, for prospective participants in primary covered transactions, as defined at 34 CFR Part 85, Sections 85.105 and 85.110--

A. The applicant certifies that it and its principals:

(a) Are not presently debarred, suspended, proposed for debarment, declared ineligible, or voluntarily excluded from covered transactions by any Federal department or agency;

(b) Have not within a three-year period preceding this application been convicted of or had a civil judgement rendered against them for commission of fraud or a criminal offense in connection with obtaining, attempting to obtain, or performing a public (Federal, State, or local) transaction or contract under a public transaction; violation of Federal or State antitrust statutes or commission of embezzlement, theft, forgery, bribery, falsification or destruction of records, making false statements, or receiving stolen property;

(c)Are not presently indicted for or otherwise criminally or civilly charged by a governmental entity (Federal, State, or local) with commission of any of the offenses enumerated in paragraph (1)(b) of this certification; and

(d) Have not within a three-year period preceding this application had one or more public transaction (Federal, State, or local) terminated for cause or default; and

B. Where the applicant is unable to certify to any of the statements in this certification, he or she shall attach an explanation to this application.

3. DRUG-FREE WORKPLACE (GRANTEES OTHER THAN INDIVIDUALS)

As required by the Drug-Free Workplace Act of 1988, and implemented at 34 CFR Part 85, Subpart F, for grantees, as defined at 34 CFR Part 85, Sections 85.605 and 85.610 -

A. The applicant certifies that it will or will continue to provide a drug-free workplace by:

(a) Publishing a statement notifying employees that the unlawful manufacture, distribution, dispensing, possession, or use of a controlled substance is prohibited in the grantee's workplace and specifying the actions that will be taken against employees for violation of such prohibition;

(b) Establishing an on-going drug-free awareness program to inform employees about-

(1) The dangers of drug abuse in the workplace;

(2) The grantee's policy of maintaining a drug-free workplace;

(3) Any available drug counseling, rehabilitation, and employee assistance programs; and

(4) The penalties that may be imposed upon employees for drug abuse violations occurring in the workplace;

(c) Making it a requirement that each employee to be engaged in the performance of the grant be given a copy of the statement required by paragraph (a);

(d) Notifying the employee in the statement required by paragraph (a) that, as a condition of employment under the grant, the employee will-

(1) Abide by the terms of the statement; and

(2) Notify the employer in writing of his or her conviction for a violation of a criminal drug statute occurring in the workplace no later than five calendar days after such conviction;

(e) Notifying the agency, in writing, within 10 calendar days after receiving notice under subparagraph (d)(2) from an employee or otherwise receiving actual notice of such conviction. Employers of convicted employees must provide notice, including position title, to: Director, Grants Policy and Oversight Staff, U.S. Department of Education, 600 Independence Avenue, S.W. (Room 3652, GSA Regional Office Building No. 3), Washington, DC 20202-4248. Notice shall include the identification number(s) of each affected grant;

(f) Taking one of the following actions, within 30 calendar days of receiving notice under subparagraph (d)(2), with respect to any employee who is so convicted-

(1) Taking appropriate personnel action against such an employee, up to and including termination, consistent with the requirements of the Rehabilitation Act of 1973, as amended; or

(2) Requiring such employee to participate satisfactorily in a drug abuse assistance or rehabilitation program approved for such purposes by a Federal, State, or local health, law enforcement, or other appropriate agency;

(g) Making a good faith effort to continue to maintain a drug-free workplace through implementation of paragraphs (a), (b), (c), (d), (e), and (f).

B. The grantee may insert in the space provided below the site(s) for the performance of work done in connection with the specific grant:

Place of Performance (Street address. city, county, state, zip code)

_____

_____

_____

Check [ ] if there are workplaces on file that are not identified here.

DRUG-FREE WORKPLACE
(GRANTEES WHO ARE INDIVIDUALS)

As required by the Drug-Free Workplace Act of 1988, and implemented at 34 CFR Part 85, Subpart F, for grantees, as defined at 34 CFR Part 85, Sections 85.605 and 85.610-

A. As a condition of the grant, I certify that I will not engage in the unlawful manufacture, distribution, dispensing, possession, or use of a controlled substance in conducting any activity with the grant; and

B. If convicted of a criminal drug offense resulting from a violation occurring during the conduct of any grant activity, I will report the conviction, in writing, within 10 calendar days of the conviction, to: Director, Grants Policy and Oversight Staff, Department of Education, 600 Independence Avenue, S.W. (Room 3652, GSA Regional Office Building No. 3), Washington, DC 20202-4248. Notice shall include the identification number(s) of each affected grant.

As the duly authorized representative of the applicant, I hereby certify that the applicant will comply with the above certifications.

NAME OF APP LICANT	PR/AWARD NUMBER AND / OR PROJECT NAME
PRINTED NAME AND TITLE OF AUTHORIZED REPRESENTATIVE	
SIGNATURE	DATE

ED 80-0013

Certification Regarding Debarment, Suspension, Ineligibility and Voluntary Exclusion -- Lower Tier Covered Transactions

This certification is required by the Department of Education regulations implementing Executive Order 12549, Debarment and Suspension, 34 CFR Part 85, for all lower tier transactions meeting the threshold and tier requirements stated at Section 85.110.

Instructions for Certification

1. By signing and submitting this proposal, the prospective lower tier participant is providing the certification set out below.

2. The certification in this clause is a material representation of fact upon which reliance was placed when this transaction was entered into. If it is later determined that the prospective lower tier participant knowingly rendered an erroneous certification, in addition to other remedies available to the Federal Government, the department or agency with which this transaction originated may pursue available remedies, including suspension and/or debarment.

3. The prospective lower tier participant shall provide immediate written notice to the person to which this proposal is submitted if at any time the prospective lower tier participant learns that its certification was erroneous when submitted or has become erroneous by reason of changed circumstances.

4. The terms "covered transaction," "debarred," "suspended," "ineligible," "lower tier covered transaction," "participant,' " person," "primary covered transaction," " principal," proposal," and "voluntarily excluded," as used in this clause, have the meanings set out in the Definitions and Coverage sections of rules implementing Executive Order 12549. You may contact the person to which this proposal is submitted for assistance in obtaining a copy of those regulations.

5. The prospective lower tier participant agrees by submitting this proposal that, should the proposed covered transaction be entered into, it shall not knowingly enter into any lower tier covered transaction with a person who is debarred, suspended, declared ineligible, or voluntarily excluded from participation in this covered transaction, unless authorized by the department or agency with which this transaction originated.

6. The prospective lower tier participant further agrees by submitting this proposal that it will include the clause titled "Certification Regarding Debarment, Suspension, Ineligibility, and Voluntary Exclusion-Lower-Tier Covered Transactions," without modification, in all lower tier covered transactions and in all solicitations for lower tier covered transactions.

7. A participant in a covered transaction may rely upon a certification of a prospective participant in a lower tier covered transaction that it is not debarred, suspended, ineligible, or voluntarily excluded from the covered transaction, unless it knows that the certification is erroneous. A participant may decide the method and frequency by which it determines the eligibility of its principals. Each participant may but is not required to, check the Nonprocurement List.

8. Nothing contained in the foregoing shall be construed to require establishment of a system of records in order to render in good faith the certification required by this clause. The knowledge and information of a participant is not required to exceed that which is normally possessed by a prudent person in the ordinary course of business dealings.

9. Except for transactions authorized under paragraph 5 of these instructions, if a participant in a covered transaction knowingly enters into a lower tier covered transaction with a person who is suspended, debarred, ineligible, or voluntarily excluded from participation in this transaction, in addition to other remedies available to the Federal Government, the department or agency with which this transaction originated may pursue available remedies, including suspension and/or debarment.

Certification

(1) The prospective lower tier participant certifies, by submission of this proposal, that neither it nor its principals are presently debarred, suspended, proposed for debarment, declared ineligible, or voluntarily excluded from participation in this transaction by any Federal department or agency.

(2) Where the prospective lower tier participant is unable to certify to any of the statements in this certification, such prospective participant shall attach an explanation to this proposal.

NAME OF APPLICANT	PR/AWARD NUMBER AND/OR PROJECT NAME
PRINTED NAME AND TITLE OF AUTHORIZED REPRESENTATIVE	
SIGNATURE	DATE

ED 80-0014, 9/90 (Replaces GCS-009 (REV.12/88), which is obsolete)

DISCLOSURE OF LOBBYING ACTIVITIES

Approved by OMB
0348-0046

Complete this form to disclose lobbying activities pursuant to 31 U.S.C 1352
(See reverse for public burden disclosure.)

1. **Type of Federal Action:** ☐ a. contract b. grant c. cooperative agreement d. loan e. loan guarantee f. loan insurance	2. **Status of Federal Action:** ☐ a. bid/offer/application b. initial award c. post-award	3. **Report Type:** ☐ a. initial filing b. material change **For Material Change Only:** year _____ quarter ____ date of last report
4. **Name and Address of Reporting Entity:** ☐ Prime ☐ Subawardee Tier _____, *if known:* **Congressional District,** *if known:*	5. **If Reporting Entity in No.4 is Subawardee, Enter Name and Address of Prime:** **Congressional District,** *if known:*	
6. **Federal Department/Agency:**	7. **Federal Program Name/Description:** CFDA Number, *if applicable*:	
8. **Federal Action Number,** *if known:*	9. **Award Amount,** *if known:* $	
10. a. **Name and Address of Lobbying ~~Entity~~ Registrant** *(if individual, last name, first name, MI):*	b. **Individuals Performing Services** *(including address if different from No. 10a) (last name, first name, MI):*	
~~11. **Amount of Payment** *(check all that apply):*~~ ~~$ _____ ☐ actual ☐ planned~~	~~13. **Type of Payment** *(Check all that apply):*~~ ~~☐ a. retainer~~ ~~☐ b. one-time fee~~ ~~☐ c. commission~~ ~~☐ d. contingent fee~~ ~~☐ e. deferred~~ ~~☐ f. other; specify: _____~~	
~~12. **Form of Payment** *(check all that apply):*~~ ~~☐ a. cash~~ ~~☐ b. in-kind; specify: nature _____~~ ~~value _____~~		
~~14. **Brief Description of Services Performed or to be Performed and Date(s) of Service, including officer(s), employee(s), or Member(s) contacted, for Payment Indicated in Item 11:**~~ ~~*(attach Continuation Sheet(s) SF-LLL-A, if necessary)*~~		
~~15. **Continuation Sheet(s) SF-LLL attached:** ☐ Yes ☐ No~~		
16. Information requested through this form is authorized by title 31 U.S.C. section 1352. This disclosure of lobbying activities is a material representation of fact upon which reliance was placed by the tier above when this transaction was made or entered into. This disclosure is required pursuant to 31 U.S.C. 1352. This information will be reported to the Congress semi-annually and will be available for public inspection. Any person who fails to file the required disclosure shall be subject to a civil penalty of not less than $10,000 and not more than $100,000 for each such failure.	**Signature:** _____ **Print Name:** _____ **Title:** _____ **Telephone No.:** _____ **Date:**	
Federal Use Only	**Authorized for Local Reproduction** **Standard Form - LLL**	

INSTRUCTIONS FOR COMPLETION OF SF-LLL, DISCLOSURE OF LOBBYING ACTIVITIES

This disclosure form shall be completed by the reporting entity, whether subawardee or prime Federal recipient, the initiation or receipt of a covered Federal action, or a material change to a previous filing, pursuant to title 31 U.S.C. section 1352. The filing of a form is required for each payment or agreement to make payment to any lobbying entity for influencing or attempting to influence an officer or employee of any agency, a Member of Congress, an officer or employee of Congress, or an employee of a Member of Congress in connection with a covered Federal action. ~~Use the SF-LLL-A Continuation Sheet for additional information if the space on the form is inadequate.~~ Complete all items that apply for both the initial filing and material change report. Refer to the implementing guidance published by the Office of Management and Budget for additional information.

1. Identify the type of covered Federal action for which lobbying activity is and/or has been secured to influence the outcome of a covered Federal action.

2. Identify the status of the covered Federal action.

3. Identify the appropriate classification of this report. If this is a follow up report caused by a material change to the information previously reported, enter the year and quarter in which the change occurred. Enter the date of the last previously submitted report by this reporting entity for this covered Federal action.

4. Enter the full name, address, city, state and zip code of the reporting entity. Include Congressional District, if known. Check the appropriate classification of the reporting entity that designates if it is, or expects to be, a prime or subaward recipient. Identify the tier of the subawardee, e.g., the first subawardee of the prime is the 1st tier. Subawards include but are not limited to subcontracts, subgrants and conract awards under grants.

5. If the organization filing the report in item 4 checks "Subawardee" then enter the full name, address, city, state and zip code of the prime Federal recipient. Include Congressional District, if known.

6. Enter the name of the Federal agency making the award or loan commitment. Include at least one organizational level below agency name, if known. For example, Department of Transportation, United States Coast Guard.

7. Enter the Federal program name or description for the covered Federal action (item 1). If known, enter the full Catalog of Federal Domestic Assistance (CFDA) number for grants, cooperative agreements, loans, and loan commitments.

8. Enter the most appropriate Federal identifying number available for the Federal action identified in item 1 (e.g., Request for Proposal (RFP) number; Invitation for Bid (IFB) number, grant announcement number; the contract, grant, or loan award number; the application/proposal control number assigned by the Federal agency). Include prefixes, e.g., "RFP-DE-90-001."

9. For a covered Federal action where there has been an award or loan commitment by the Federal agency, enter the Federal amount of the award/loan commitment for the prime entity identified in item 4 or 5.

10. (a) Enter the full name, address, city, state, and zip code of the ~~lobbying entity~~ registrant under the Lobbying Disclosure Act of 1995 engaged by the reporting entity identified in item 4 to influence the covered Federal action.

    (b) Enter the full names of the individual(s) performing services, and include full address if different from 10(a). Enter Last Name, First Name, and Middle Initial (MI).

~~11. Enter the amount of compensation paid or reasonably expected to be paid by the reporting entity (item 4) to the lobbying entity (item 10). Indicate whether the payment has been made (actual) or will be made (planned). Check all boxes that apply. If this a material change report, enter the cumulative amount of payment made or planned to be made.~~

~~12. Check the appropriate box(es). Check all boxes that apply. If payment is made through an in-kind contribution, specify the nature and value of in-kind payment.~~

~~13. Check the appropriate box(es). Check all boxes that apply. If other specify nature.~~

~~14. Provide a specific and detailed description of the services that the lobbyist has performed, or will be expected to perform, and the date(s) of any services rendered. Include all preparatory and related activity, not just time spent in actual contact with Federal officials. Identify the Federal official(s) contacted or the officer(s), employee(s), or Member(s) of Congress that were contacted.~~

~~15. Check whether or not a SF-LLL-A Continuation Sheet(s) is attached.~~

16. The certifying official shall sign and date the form, print his/her name, title, and telephone number.

Public reporting burden for this collection of information is estimated to average 30 minutes per response, including time for reviewing instructions, searching existing data sources, gathering and maintaining the data needed, and completing and reviewing the collection of information. Send comments regarding the burden estimate or any other aspect of this collection of information, including suggestions

DUNS Number Instructions

D-U-N-S No.: Please provide the applicant's D-U-N-S Number. You can obtain your D-U-N-S Number at no charge by calling **1-800-333-0505** or by completing a D-U-N-S Number Request Form. The form can be obtained via the Internet at the following URL:

http://www.dnb.com/dbis/aboutdb/intlduns.htm

The D-U-N-S Number is a unique nine-digit number that does not convey any information about the recipient. A built in check digit helps assure the accuracy of the D-U-N-S Number. The ninth digit of each number is the check digit, which is mathematically related to the other digits. It lets computer systems determine if a D-U-N-S Number has been entered correctly.

Dun & Bradstreet, a global information services provider, has assigned D-U-N-S numbers to over 43 million companies worldwide.

[FR Doc. 98–17114 Filed 6–26–98; 8:45 am]
BILLING CODE 4000–01–C

Reader Aids

Federal Register

Vol. 63, No. 124

Monday, June 29, 1998

CUSTOMER SERVICE AND INFORMATION

Federal Register/Code of Federal Regulations

General Information, indexes and other finding aids	**202–523–5227**
Laws	**523–5227**
Presidential Documents	
Executive orders and proclamations	**523–5227**
The United States Government Manual	**523–5227**
Other Services	
Electronic and on-line services (voice)	**523–4534**
Privacy Act Compilation	**523–3187**
Public Laws Update Service (numbers, dates, etc.)	**523–6641**
TTY for the deaf-and-hard-of-hearing	**523–5229**

ELECTRONIC RESEARCH

World Wide Web

Full text of the daily Federal Register, CFR and other publications:

http://www.access.gpo.gov/nara

Federal Register information and research tools, including Public Inspection List, indexes, and links to GPO Access:

http://www.nara.gov/fedreg

E-mail

PENS (Public Law Electronic Notification Service) is an E-mail service that delivers information about recently enacted Public Laws. To subscribe, send E-mail to

listproc@lucky.fed.gov

with the text message:

subscribe publaws-l <firstname> <lastname>

Use listproc@lucky.fed.gov only to subscribe or unsubscribe to PENS. We cannot respond to specific inquiries at that address.

Reference questions. Send questions and comments about the Federal Register system to:

info@fedreg.nara.gov

The Federal Register staff cannot interpret specific documents or regulations.

FEDERAL REGISTER PAGES AND DATES, JUNE

29529–29932 1
29933–30098 2
30099–30364 3
30365–30576 4
30577–31096 5
31097–31330 8
31331–31590 9
31591–31886 10
31887–32108 11
32109–32592 12
32593–32700 15
32701–32964 16
32965–33230 17
33231–33522 18
33523–33832 19
33833–34118 22
34119–34254 23
34255–34548 24
34549–34776 25
34777–35116 26
35117–35498 29

CFR PARTS AFFECTED DURING JUNE

At the end of each month, the Office of the Federal Register publishes separately a List of CFR Sections Affected (LSA), which lists parts and sections affected by documents published since the revision date of each title.

3 CFR

Proclamations:
7100 30099
7101 30101
7102 30103
7103 30359
7104 31591
7105 33229
7106 33833

Executive Orders:
July 2, 1910 (Revoked in part by PLO 7332 30250
November 23, 1911 (Revoked in part by PLO 7332).....30250
February 11, 1915 (Revoked by PLO 7338) 30774
April 17, 1926 (Revoked in part by PLO 7332).....30250
1819 (See Department of the Interior notice of June 8, 1998).....32676
11478 (Amended by EO 13087).....30097
12473 (Amended by EO 13086).....30065
13086 30065
13087 30097
13088 32109
13089 32701

Administrative Orders:
Presidential Determinations:
No. 98–23 of May 23, 1998 30365
No. 98–24 of May 29, 1998 31879
No. 98–25 of May 30, 1998 31881
No. 98–26 of June 3, 1998 32705
No. 98–27 of June 3, 1998 32707
No. 98–28 of June 3, 1998 32709
No. 98–29 of June 3, 1998 32711
No. 98–30 of June 15, 1998 34255
Memorandums:
May 30, 1998.....30363
June 1, 1998.....31885

5 CFR

317 34257
335 34257
351 32593
575 34119
581 34777
582 34777
831 32595
842 32595
846 33231
3501 34258

Proposed Rules:
532 34134
1315 33000
1631 29672
1655 29674

7 CFR

28 33235
29 29529
54 32965
301 .....31593, 31601, 31887
319 31097
401 .....29933, 34549
425 31331
435 34778
447 33835
457 .....29933, 31331, 31338, 33835, 34549, 34778
800 32713
801 34554
868 29530
922 32717
930 33523
953 32966
958 32598
959 30577
985 30579
989 29531
997 33235
998 33235
1412 31102
1485 .....29938, 32041
1724 35312

Proposed Rules:
56 31362
70 31362
318 31675
319 .....29675, 30646
920 30655
928 35164
981 33010
1001 32147
1002 32147
1004 32147
1005 32147
1006 32147
1007 32147
1012 32147
1013 32147
1030 32147
1032 32147
1033 32147
1036 32147
1040 32147
1044 32147
1046 32147
1049 32147
1050 32147
1064 32147

1065 32147
1068 32147
1076 32147
1079 32147
1106 32147
1124 32147
1126 32147
1131 32147
1134 32147
1135 32147
1137 32147
1138 32147
1139 32147
1230 31942
1301 31943
1304 31943
1306 31943

8 CFR

3 ....31889, 31890, 32288, 35117, 35309
103 30105
209 30105
212 31895
214 ....31872, 31874, 32113
236 32288
240 35309
245 35309
274a 35309
299 35309
299 32113
Proposed Rules:
208 31945
214 ....30415, 30419

9 CFR

50 34259
71 32117
77 30582
78 ....34264, 34266
Proposed Rules:
1 34333
2 34333
205 31130

10 CFR

2 31840
30 29535
32 32969
34 32971
35 31604
40 29535
50 29535
70 29535
71 32600
72 29535
140 31840
170 31840
171 31840
600 29941
1010 30109
Proposed Rules:
71 34335
72 31364
431 34758

11 CFR

Proposed Rules:
9003 33012
9033 33012

12 CFR

10 35309
225 30369
226 33990
607 34267
932 30584
933 35117
935 35117
Proposed Rules:
250 ....32766, 32768
615 33281

13 CFR

121 31896
125 31896
126 31896
Proposed Rules:
120 29676

14 CFR

11 31866
21 ....32972, 34784
25 34121
27 34786
29 ....32972, 34784
33 33529
39 ....29545, 29546, 30111, 30112, 30114, 30117, 30118, 30119, 30121, 30122, 30124, 30370, 30372, 30373, 30375, 30377, 30378, 30587, 31104, 31106, 31107, 31108, 31338, 31340, 31345, 31347, 31348, 31350, 31607, 31608, 31609, 31610, 31612, 31613, 31614, 31616, 31916, 32119, 32121, 32605, 32607, 32608, 32609, 32719, 31720, 32973, 32975, 33234, 33244, 33246, 33530, 33532, 33536, 33537, 33539, 34268, 34269, 34271, 34274, 34555, 34556, 34558, 34559, 34560, 34562, 34563, 34565, 34567, 34569, 34571, 34572, 34574, 34576, 34578, 34580, 34581, 34583, 34585, 34587, 34589, 34591, 34789, 34790, 34796, 34798, 34800, 34803, 35128
71 ....29942, 29943, 29944, 30043, 30125, 30126, 30380, 30588, 30589, 30590, 30591, 30592, 30593, 30594, 30816, 31351, 31352, 31353, 31355, 31356, 31618, 31620, 32722, 32723, 33541, 33542, 33543, 33544, 33841, 33842, 34804, 34805, 34806, 35129, 35309
73 ....32723, 32724
97 ....30595, 30597, 33844, 33845
121 31866
125 31866
129 31866
135 31866
Proposed Rules:
25 30423
27 34610
39 ....30150, 30152, 30154, 30155, 30425, 30658, 30660, 30662, 31131, 31135, 31138, 31140, 31142, 31368 31370, 31372, 31374, 31375, 31377, 31380, 31382, 32151, 32152, 32154, 32624, 32771, 33014, 33016, 33018, 33019, 33293, 33295, 34135, 34830, 34832, 34833
71 ....29959, 29960, 30156, 30157, 30159, 30427, 30428, 30570, 30663, 30664, 30665, 30666, 31384, 31678, 31679, 32156, 32157, 32158, 33021, 33591, 33881, 34136, 34137, 34836, 34837, 34838, 34839, 35166

15 CFR

Ch. VII 32123
2 29945
280 34965
700 31918
705 31622
902 30381
2013 29945

16 CFR

2 32977
4 32977
5 35130
14 34807
802 34592
1700 29948
Proposed Rules:
1616 31950
1700 32159

17 CFR

1 ....32725, 32726, 33848
33 32726
140 32733
Proposed Rules:
Ch. 1 33297
1 30668
10 30675
34 34335
35 34335
201 33305
240 32628

18 CFR

Ch. 1 30675
37 32611
284 30127
803 32124

19 CFR

10 29953
19 ....32916, 34808
24 ....32916, 34808
111 ....32916, 34808
113 ....32916, 34808
143 ....32916, 34808
162 ....32916, 34808
163 ....32916, 34808
178 ....32916, 34808
181 ....32916, 34808
201 30599
207 30599
Proposed Rules:
113 31385
151 31385

20 CFR

209 32612
255 29547
402 35130
404 30410
416 ....33545, 33849
Proposed Rules:
404 31680
416 32161

21 CFR

10 32733
54 35134
101 ....30615, 34084, 34092, 34097, 34101, 34104, 34107, 34110, 34112, 34115
165 30620
178 ....29548, 35134
510 ....29551, 31623, 31931, 32978
520 ....29551, 31624
522 29551
524 31931
801 29552
864 30132
1240 29591
Proposed Rules:
10 32772
16 31143
70 30160
73 30160
74 30160
80 30160
81 30160
82 30160
99 31143
101 30160
178 30160
201 30160
310 33592
334 33592
701 30160

22 CFR

514 ....34276, 34808

23 CFR

655 33546
Proposed Rules:
655 ....31950, 31957
1331 33220

24 CFR

Ch. V 35135
570 31868
982 31624
Proposed Rules:
50 30046
55 30046
58 30046
200 32958

25 CFR

Proposed Rules:
11 32631

26 CFR

1 ....30621, 33550, 34594
7 33550
31 32735
602 ....30621, 33550, 34594
Proposed Rules:
1 ....29961, 32164, 33595, 34615, 34616
31 32774

27 CFR

9 33850

28 CFR

16 ....29591, 34965
50 29591
Proposed Rules:
16 30429
25 30430
36 29924

29 CFR

402 33778

403 ... 33778
404 ... 33778
405 ... 33778
406 ... 33778
408 ... 33778
409 ... 33778
417 ... 33778
452 ... 33778
453 ... 33778
457 ... 33778
458 ... 33778
1625 ... 30624
1910 ... 33450
1915 ... 35137
1926 ... 33450, 35137
4044 ... 32614

Proposed Rules:
1910 ... 34139, 34140

30 CFR
202 ... 33853
216 ... 33853
250 ... 29604, 33853, 34596
916 ... 31109
924 ... 34597
925 ... 34277
931 ... 31112
938 ... 32615
943 ... 31114
946 ... 34280

Proposed Rules:
Ch. II ... 32166
707 ... 34768
874 ... 34768
914 ... 32632
934 ... 33022
948 ... 32632

31 CFR
Ch. V ... 29608

32 CFR
204 ... 33248
212 ... 32616
234 ... 32618
318 ... 33248
352a ... 33248
383 ... 33248
706 ... 29612, 31356, 34811

Proposed Rules:
286 ... 31161

33 CFR
62 ... 33570
66 ... 33570
100 ... 30142, 30632, 32736, 32738, 33574, 34811, 34812, 34813
110 ... 32739, 34814
117 ... 29954, 31357, 31625, 33248, 33575, 33576, 33577, 34123
165 ... 30143, 30633, 31625, 32124, 32741, 33248, 33578, 34124, 34125, 34287, 34288
404 ... 35138
405 ... 35138
406 ... 35138
407 ... 35138

Proposed Rules:
100 ... 32774, 33596
117 ... 29676, 29677, 29961, 30160
151 ... 32780
165 ... 31681, 32781, 33311

34 CFR
301 ... 29928
685 ... 34815

Proposed Rules:
379 ... 34218
662 ... 33766
663 ... 33766
664 ... 33766

35 CFR
115 ... 33853
133 ... 29613

36 CFR
242 ... 35322

Proposed Rules:
Ch. XI ... 29679
13 ... 30162
1191 ... 29924

37 CFR
1 ... 29614, 29620
201 ... 30634, 34289
251 ... 30634
252 ... 30634
253 ... 30634
256 ... 30634
257 ... 30634
258 ... 30634
259 ... 30634
260 ... 30634

38 CFR
0 ... 33579
20 ... 33579
21 ... 34127, 34131

Proposed Rules:
36 ... 30162

39 CFR
232 ... 34599
3001 ... 35140

40 CFR
9 ... 33250
52 ... 29955, 29957, 31116, 31120, 31121, 32126, 32621, 32980, 33854, 34298, 34300, 34600, 34602, 35141, 35145
60 ... 32743
62 ... 29644, 33250, 34816
63 ... 31358, 33782
80 ... 31627, 34818
81 ... 31014, 32128
141 ... 31732
148 ... 35147
159 ... 33580
180 ... 30636, 31631, 31633, 31640, 31642, 32131, 32134, 32136, 32138, 32753, 33583, 34302, 34303, 34304, 34310, 34318, 34825
185 ... 32753, 34318, 34825
186 ... 32753, 34318, 34825
261 ... 33782
268 ... 31269, 35147
270 ... 33782
271 ... 35147
300 ... 32760, 33855, 34132, 34320
721 ... 29646
745 ... 29908
750 ... 35381
761 ... 35381

Proposed Rules:
52 ... 31196, 31197, 32172, 32173, 33312, 33314, 34336, 34618, 35167
60 ... 32783
62 ... 29687, 34840
63 ... 29963, 31398, 34336
69 ... 30438
72 ... 31197
75 ... 31197
80 ... 30438, 31682
81 ... 33597, 33605
82 ... 32044
141 ... 34142
142 ... 34142
159 ... 30166
194 ... 34347
355 ... 31267
370 ... 31267
442 ... 34686
745 ... 30302
763 ... 34348

41 CFR

Proposed Rules:
105 ... 33023

42 CFR
400 ... 34968
403 ... 34968
410 ... 34320, 34968
411 ... 34968
417 ... 34968
420 ... 31123
422 ... 34968
441 ... 29648
482 ... 33856
489 ... 29648
493 ... 32699

Proposed Rules:
Ch. IV ... 30166
405 ... 30818
410 ... 30818, 33882
413 ... 30818
414 ... 30818, 33882
415 ... 30818
416 ... 32290
424 ... 30818
485 ... 30818
488 ... 32290

43 CFR
20 ... 34258

44 CFR
62 ... 32761
64 ... 30642

45 CFR
672 ... 32761
1302 ... 34328

Proposed Rules:
142 ... 32784
670 ... 29963
672 ... 30438
673 ... 30438
1606 ... 30440
1623 ... 30440
1625 ... 30440
1644 ... 33251

46 CFR

Proposed Rules:
27 ... 31958
197 ... 34840

47 CFR
0 ... 29656
1 ... 29656, 29957
2 ... 31645
11 ... 29660
21 ... 29667
52 ... 35150
53 ... 34603
54 ... 33585
73 ... 29668, 30144, 30145, 32981, 33875, 34604
74 ... 33875
76 ... 29660, 31934
80 ... 29656
90 ... 32580

Proposed Rules:
Ch. I ... 35168
1 ... 29687
2 ... 31684, 31685
15 ... 31684, 34618
18 ... 34618
22 ... 33890
25 ... 31685
64 ... 32798, 33890
68 ... 31685
73 ... 30173, 33892, 34619, 34620, 34621, 34622
74 ... 33892

48 CFR
Ch. I ... 34058, 34080
4 ... 34059
5 ... 34079
8 ... 34079
9 ... 34062
11 ... 34062, 34064
16 ... 34073
19 ... 34064
22 ... 34059, 34073
25 ... 34075, 34076
27 ... 34077
31 ... 34078, 34079
35 ... 34059
36 ... 34059
44 ... 34059
45 ... 34079
48 ... 34078
52 ... 34059, 34062, 34064, 34073, 34076
53 ... 34064, 34079
204 ... 31934
213 ... 33586
219 ... 33586
222 ... 31935
225 ... 31936
235 ... 34605
245 ... 31937
252 ... 31935, 31936, 33586
253 ... 33586
1804 ... 32763
1806 ... 32763
1807 ... 32763
1809 ... 32763
1822 ... 32763
1833 ... 32763
1842 ... 32763
1852 ... 32763
1871 ... 32763
1872 ... 32763

Proposed Rules:
216 ... 31959
245 ... 31959
252 ... 31959

49 CFR
1 ... 33589
107 ... 29668, 30411
171 ... 30411

172.....30411
173.....30411
174.....30411
175.....30411
176.....30411
177.....30411
213.....33992
387.....33254
390.....33254
391.....33254
392.....33254
395.....33254
396.....33254
397.....33254
571 .....32140, 33194, 34330

Proposed Rules:
24.....32175
37.....29924
171.....30572
177.....30572
178.....30572
180.....30572
350.....30678
375.....31266
377.....31266
385.....32801
390.....32801
393.....33611
567.....34623
571 .....30449, 32179, 34350
572.....35170
575.....30695
594.....30700

50 CFR
17 .....31400, 31647, 32981, 32996
100.....35332
285.....35161
300.....30145, 31938
648.....32143, 32998
660 .....30147, 31406, 32764, 34606, 35162
679 .....29670, 30148, 30412, 30644, 31939, 32144, 32765, 34332

Proposed Rules:
17 .....30453, 31691, 31693, 32635, 33033, 33034, 33901, 34142, 35183
222.....30455
226.....30455
227.....30455, 33034
300.....34356, 34624
600.....30455
622 .....29688, 30174, 30465, 34842
630.....31710
648.....31713, 34358
660 .....29689, 30180, 35184

–

REMINDERS

The items in this list were editorially compiled as an aid to Federal Register users. Inclusion or exclusion from this list has no legal significance.

RULES GOING INTO EFFECT JUNE 29, 1998

COMMERCE DEPARTMENT

International Trade Administration

Antidumping:
- Welded carbon steel pipe and tube from—
  - Turkey; published 6-29-98

ENERGY DEPARTMENT

Information classification:
- Restricted data and formerly restricted data identification; Federal procedures; published 12-31-97

ENVIRONMENTAL PROTECTION AGENCY

Air quality implementation plans; approval and promulgation; various States:
- New York; published 4-30-98

Hazardous waste:
- Identification and listing—
  - Organobromine production wastes; published 6-29-98

FEDERAL COMMUNICATIONS COMMISSION

Radio stations; table of assignments:
- Arkansas; published 5-21-98
- Montana; published 5-21-98
- New York; published 5-21-98
- Vermont and New York; published 5-21-98

FEDERAL TRADE COMMISSION

Conflict of interests; published 6-29-98

HEALTH AND HUMAN SERVICES DEPARTMENT

Food and Drug Administration

Food additives:
- Adjuvants, production aids, and sanitizers—
  - 1,6-hexanediamine, N,N'-bis(2,2,6,6-tetramethyl-4-piperidinyl)-, polymers wit h morpholine-2,4,6-trichloro-1,3,5-triazine reaction products; published 6-29-98

HOUSING AND URBAN DEVELOPMENT DEPARTMENT

Disaster recovery initiative; use of grant funds; clarification; published 6-29-98

Mortgage and loan insurance programs:
- Single family mortgage insurance—
  - Electronic underwriting; published 5-29-98

INTERIOR DEPARTMENT

Minerals Management Service

Royalty management and Outer Continental Shelf; oil, gas, and sulphur operations:
- Gas royalties reporting and payment standards and gas analysis reports; and oil and gas production measurement, surface commingling, and security
  - Correction; published 5-20-98

Royalty management:
- Gas royalties reporting and payment standards and gas analysis reports
  - Correction; published 6-22-98

INTERNATIONAL TRADE COMMISSION

Freedom of Information and Privacy Acts; implementation; published 5-29-98

JUSTICE DEPARTMENT

Executive Office for Immigration Review:
- Aliens who are nationals of Guatemala, El Salvador, and former Soviet bloc countries; deportation suspension and removal cancellation; motion to open
  - Correction; published 6-29-98

SECURITIES AND EXCHANGE COMMISSION

Securities:
- Shareholders proposals; published 5-28-98

TRANSPORTATION DEPARTMENT

Federal Aviation Administration

Airworthiness directives:
- Boeing; published 6-24-98

TREASURY DEPARTMENT

Comptroller of the Currency

Municipal securities dealers; reporting and recordkeeping requirements; published 5-28-98

TREASURY DEPARTMENT

Customs Service

Financial and accounting procedures:
- Automated clearinghouse credit; published 5-28-98

Recordkeeping, inspection, search, and seizure:
- Prior disclosure of previous entry of merchandise into U.S. by fraud, gross negligence or negligence; formal investigation commencement; published 5-28-98

COMMENTS DUE NEXT WEEK

AGRICULTURE DEPARTMENT

Agricultural Marketing Service

Kiwifruit grown in—
- California; comments due by 7-6-98; published 6-5-98

AGRICULTURE DEPARTMENT

Animal and Plant Health Inspection Service

Plant-related quarantine, domestic:
- Gypsy moth; comments due by 7-10-98; published 5-11-98
- Mediterranean fruit fly; comments due by 7-10-98; published 5-11-98

User fees; veterinary diagnostic services; comments due by 7-6-98; published 5-4-98

AGRICULTURE DEPARTMENT

Food and Nutrition Service

Personal Responsibility and Work Opportunity Reconciliation Act of 1996; implementation:
- Food stamp program; retailer integrity, fraud reduction, and penalties; comments due by 7-6-98; published 5-6-98

COMMERCE DEPARTMENT

National Oceanic and Atmospheric Administration

Fishery conservation and management:
- Caribbean, Gulf, and South Atlantic fisheries—
  - South Atlantic shrimp; comments due by 7-6-98; published 6-3-98
- Magnuson-Stevens Act provisions—
  - Fisheries and gear list and notification guidelines; comments due by 7-6-98; published 6-4-98

DEFENSE DEPARTMENT

Acquisition regulations:
- Simplified acquisition procedures; comments due by 7-7-98; published 5-8-98

Federal Acquisition Regulation (FAR):
- Offeror or contractor representation requirements; reduction or removal; comments due by 7-6-98; published 5-7-98

ENVIRONMENTAL PROTECTION AGENCY

Air pollutants, hazardous; national emission standards:
- Petroleum refineries; comments due by 7-9-98; published 6-9-98

Air programs:
- Fuels and fuel additives—
  - Colorado; gasoline Reid Vapor Pressure volatility standard for 1998, 1999, and 2000; approval of petition to relax; comments due by 7-10-98; published 6-10-98
  - Colorado; gasoline Reid Vapor Pressure volatility standard for 1998, 1999, and 2000; approval of petition to relax; comments due by 7-10-98; published 6-10-98

Air quality implementation plans; approval and promulgation; various States:
- Pennsylvania; comments due by 7-8-98; published 6-8-98
- Tennessee; comments due by 7-8-98; published 6-8-98
- Texas; comments due by 7-8-98; published 6-8-98

Clean Air Act:
- Acid rain program—
  - Continuous emission monitoring; bias test, relative accuracy test, and availability analysis; determinations; comments due by 7-6-98; published 5-21-98
  - Continuous emission monitoring; rule streamlining; correction; comments due by 7-6-98; published 6-8-98

Pesticides; emergency exemptions, etc.:
- 2-propene-1-sulfonic acid, etc.; comments due by 7-6-98; published 5-6-98

Pesticides; tolerances in food, animal feeds, and raw agricultural commodities:
- E.I. DuPont de Nemours & Co.; comments due by 7-6-98; published 5-6-98

Safener HOE-107892; comments due by 7-6-98; published 5-6-98

FEDERAL COMMUNICATIONS COMMISSION

Industrial, scientific, and medical equipment:

RF (radio frequency) lighting devices; comments due by 7-8-98; published 4-24-98

Radio frequency devices:

Scanning receivers, further ensurance against receiving cellular radio signals; comments due by 7-10-98; published 6-10-98

Radio stations; table of assignments:

Illinois; comments due by 7-6-98; published 5-21-98

FEDERAL EMERGENCY MANAGEMENT AGENCY

Disaster assistance:

Temporary housing assistance; application period extension; comments due by 7-6-98; published 5-6-98

FEDERAL TRADE COMMISSION

Electronic media; rules and guides applicability; comment request; comments due by 7-7-98; published 5-6-98

GENERAL SERVICES ADMINISTRATION

Federal Acquisition Regulation (FAR):

Offeror or contractor representation requirements; reduction or removal; comments due by 7-6-98; published 5-7-98

HEALTH AND HUMAN SERVICES DEPARTMENT

Food and Drug Administration

Biological products:

General safety test requirements; exemptions; comments due by 7-6-98; published 4-20-98

Color additives:

Color additive lakes; safe use in food, drugs, and cosmetics; permanent listing; comments due by 7-6-98; published 6-3-98

Food for human consumption:

Beverages—

Fruit and vegetable juices and juice products; HACCP procedures for safe and sound importation; comments due by 7-8-98; published 4-24-98

Juice and juice products safety; preliminary regulatory impact analysis and initial regulatory flexibility analysis; comments due by 7-8-98; published 5-1-98

Food labeling—

Crabmeat; common or usual name for nonstandardized foods; comments due by 7-7-98; published 4-23-98

Medical devices:

Hematology and pathology devices—

Over-the-counter test sample collection systems for drugs of abuse testing; reclassification and designation as restricted devices; comments due by 7-6-98; published 3-5-98

HEALTH AND HUMAN SERVICES DEPARTMENT

Health Care Financing Administration

Health Insurance Portability and Accountability Act of 1996:

Administrative requirements—

Electronic transactions standards; comments due by 7-6-98; published 5-7-98

Health Insurance Portability and Accountability Act; implementation:

Administrative requirements—

National standard health care provider identifier; comments due by 7-6-98; published 5-7-98

Medicare:

Clinical diagnostic laboratory testing; coverage and administrative policies; negotiated rulemaking committee—

Establishment and meetings; comments due by 7-6-98; published 6-3-98

Hospital inpatient prospective payment systems and 1999 FY rates; comments due by 7-7-98; published 5-8-98

Provider-sponsored organizations; waiver requirements and solvency standards; comments due by 7-6-98; published 5-7-98

HOUSING AND URBAN DEVELOPMENT DEPARTMENT

Housing and Community Development Act of 1974; implementation:

Nondiscrimination in programs and activities receiving assistance under Title I; discrimination complaint filing procedures; comments due by 7-10-98; published 5-11-98

Low income housing:

Housing assistance payments (Section 8)—

Fair market rent schedules for rental certificate, loan managment, property disposition, moderate rehabilitation, rental voucher programs, etc.; comments due by 7-6-98; published 5-5-98

INTERIOR DEPARTMENT

Fish and Wildlife Service

Endangered and threatened species:

Mariana fruit bat; comments due by 7-10-98; published 5-29-98

JUSTICE DEPARTMENT

National Instant Criminal Background Check System; policies and procedures; establishment; comments due by 7-6-98; published 6-4-98

Privacy Act; implementation; comments due by 7-6-98; published 6-4-98

NATIONAL AERONAUTICS AND SPACE ADMINISTRATION

Federal Acquisition Regulation (FAR):

Offeror or contractor representation requirements; reduction or removal; comments due by 7-6-98; published 5-7-98

SMALL BUSINESS ADMINISTRATION

Business loans:

504 program financing and clarification of existing regulations; comments due by 7-6-98; published 5-5-98

TRANSPORTATION DEPARTMENT

Coast Guard

Ports and waterways safety:

Gulf of Alaska, southeast of Narrow Cape, Kodiak Island, AK; safety zone; comments due by 7-10-98; published 6-10-98

San Francisco Bay et al., CA; safety/security zone; comments due by 7-6-98; published 5-7-98

Regattas and marine parades:

Greater Jacksonville Kingfish Tournament; comments due by 7-9-98; published 6-19-98

TRANSPORTATION DEPARTMENT

Federal Aviation Administration

Airworthiness directives:

Aerospatiale; comments due by 7-6-98; published 6-4-98

Agusta S.p.A.; comments due by 7-6-98; published 6-5-98

Airbus; comments due by 7-6-98; published 6-3-98

Allison Engine Co.; comments due by 7-7-98; published 5-8-98

Boeing; comments due by 7-6-98; published 5-20-98

Bombardier; comments due by 7-8-98; published 6-8-98

British Aerospace; comments due by 7-6-98; published 6-3-98

Construcciones Aeronauticas, S.A.; comments due by 7-8-98; published 6-8-98

Dornier; comments due by 7-6-98; published 6-9-98

Eurocopter France; comments due by 7-6-98; published 5-7-98

McDonnell Douglas; comments due by 7-6-98; published 5-20-98

Pratt & Whitney; comments due by 7-6-98; published 5-7-98

Raytheon; comments due by 7-10-98; published 5-5-98

REVO, Inc.; comments due by 7-8-98; published 5-15-98

Rolls-Royce; comments due by 7-6-98; published 5-6-98

Saab; comments due by 7-9-98; published 6-9-98

Class B airspace; comments due by 7-6-98; published 6-4-98

Class D and Class E airspace; comments due by 7-6-98; published 6-3-98

Class E airspace; comments due by 7-6-98; published 5-15-98

Colored Federal airways; comments due by 7-6-98; published 6-5-98

TRANSPORTATION DEPARTMENT

National Highway Traffic Safety Administration

Insurer reporting requirements:

Motor vehicle theft loss experiences report filing; list; comments due by 7-6-98; published 5-4-98

TRANSPORTATION DEPARTMENT

Research and Special Programs Administration

Hazardous materials:

Hazardous liquid transportation—

Liquefied compressed gases in cargo tank motor vehicles; safety standards for unloading; negotiated rulemaking committee; intent to establish and meeting; comments due by 7-6-98; published 6-4-98

LIST OF PUBLIC LAWS

This is a continuing list of public bills from the current session of Congress which have become Federal laws. It may be used in conjunction with ''P L U S'' (Public Laws Update Service) on 202–523–6641. This list is also available online at http://www.nara.gov/fedreg.

The text of laws is not published in the **Federal Register** but may be ordered in ''slip law'' (individual pamphlet) form from the Superintendent of Documents, U.S. Government Printing Office, Washington, DC 20402 (phone, 202–512–1808). The text will also be made available on the Internet from GPO Access at http://www.access.gpo.gov/su_docs/. Some laws may not yet be available.

H.R. 1847/P.L. 105–184
Telemarketing Fraud Prevention Act of 1998 (June 23, 1998; 112 Stat. 520)

S. 1150/P.L. 105–185
Agricultural Research, Extension, and Education Reform Act of 1998 (June 23, 1998; 112 Stat. 523)

S. 1900/P.L. 105–186
U.S. Holocaust Assets Commission Act of 1998 (June 23, 1998; 112 Stat. 611)

H.R. 3811/P.L. 105–187
Deadbeat Parents Punishment Act of 1998 (June 24, 1998; 112 Stat. 618)

Last List June 24, 1998

Public Laws Electronic Notification Service (PENS)

PENS is a free electronic mail notification service of newly enacted public laws. To subscribe, send E-mail to **listproc@lucky.fed.gov** with the text message:

subscribe PUBLAWS-L Your Name.

Note: This service is strictly for E-mail notification of new public laws. The text of laws is not available through this service. **PENS** cannot respond to specific inquiries sent to this address.

CFR CHECKLIST

This checklist, prepared by the Office of the Federal Register, is published weekly. It is arranged in the order of CFR titles, stock numbers, prices, and revision dates.

An asterisk (*) precedes each entry that has been issued since last week and which is now available for sale at the Government Printing Office.

A checklist of current CFR volumes comprising a complete CFR set, also appears in the latest issue of the LSA (List of CFR Sections Affected), which is revised monthly.

The CFR is available free on-line through the Government Printing Office's GPO Access Service at http://www.access.gpo.gov/nara/cfr/index.html. For information about GPO Access call the GPO User Support Team at 1-888-293-6498 (toll free) or 202-512-1530.

The annual rate for subscription to all revised paper volumes is $951.00 domestic, $237.75 additional for foreign mailing.

Mail orders to the Superintendent of Documents, Attn: New Orders, P.O. Box 371954, Pittsburgh, PA 15250–7954. All orders must be accompanied by remittance (check, money order, GPO Deposit Account, VISA, Master Card, or Discover). Charge orders may be telephoned to the GPO Order Desk, Monday through Friday, at **(202) 512–1800** from 8:00 a.m. to 4:00 p.m. eastern time, or FAX your charge orders to **(202) 512-2250**.

Title	Stock Number	Price	Revision Date
1, 2 (2 Reserved)	(869–034–00001–1)	5.00	[5] Jan. 1, 1998
3 (1997 Compilation and Parts 100 and 101)	(869–034–00002–9)	19.00	[1] Jan. 1, 1998
4	(869–034–00003–7)	7.00	[5] Jan. 1, 1998
5 Parts:			
1–699	(869–034–00004–5)	35.00	Jan. 1, 1998
700–1199	(869–034–00005–3)	26.00	Jan. 1, 1998
1200–End, 6 (6 Reserved)	(869–034–00006–1)	39.00	Jan. 1, 1998
7 Parts:			
1–26	(869–034–00007–0)	24.00	Jan. 1, 1998
27–52	(869–034–00008–8)	30.00	Jan. 1, 1998
53–209	(869–034–00009–6)	20.00	Jan. 1, 1998
210–299	(869–034–00010–0)	44.00	Jan. 1, 1998
300–399	(869–034–00011–8)	24.00	Jan. 1, 1998
400–699	(869–034–00012–6)	33.00	Jan. 1, 1998
700–899	(869–034–00013–4)	30.00	Jan. 1, 1998
900–999	(869–034–00014–2)	39.00	Jan. 1, 1998
1000–1199	(869–034–00015–1)	44.00	Jan. 1, 1998
1200–1599	(869–034–00016–9)	34.00	Jan. 1, 1998
1600–1899	(869–034–00017–7)	58.00	Jan. 1, 1998
1900–1939	(869–034–00018–5)	18.00	Jan. 1, 1998
1940–1949	(869–034–00019–3)	33.00	Jan. 1, 1998
1950–1999	(869–034–00020–7)	40.00	Jan. 1, 1998
2000–End	(869–034–00021–5)	24.00	Jan. 1, 1998
8	(869–034–00022–3)	33.00	Jan. 1, 1998
9 Parts:			
1–199	(869–034–00023–1)	40.00	Jan. 1, 1998
200–End	(869–034–00024–0)	33.00	Jan. 1, 1998
10 Parts:			
0–50	(869–034–00025–8)	39.00	Jan. 1, 1998
51–199	(869–034–00026–6)	32.00	Jan. 1, 1998
200–499	(869–034–00027–4)	31.00	Jan. 1, 1998
500–End	(869–034–00028–2)	43.00	Jan. 1, 1998
11	(869–034–00029–1)	19.00	Jan. 1, 1998
12 Parts:			
1–199	(869–034–00030–4)	17.00	Jan. 1, 1998
200–219	(869–034–00031–2)	21.00	Jan. 1, 1998
220–299	(869–034–00032–1)	39.00	Jan. 1, 1998
300–499	(869–034–00033–9)	23.00	Jan. 1, 1998
500–599	(869–034–00034–7)	24.00	Jan. 1, 1998
600–End	(869–034–00035–5)	44.00	Jan. 1, 1998
13	(869–034–00036–3)	23.00	Jan. 1, 1998
14 Parts:			
1–59	(869–034–00037–1)	47.00	Jan. 1, 1998
60–139	(869–034–00038–0)	40.00	Jan. 1, 1998
140–199	(869–034–00039–8)	16.00	Jan. 1, 1998
200–1199	(869–034–00040–1)	29.00	Jan. 1, 1998
1200–End	(869–034–00041–0)	23.00	Jan. 1, 1998
15 Parts:			
0–299	(869–034–00042–8)	22.00	Jan. 1, 1998
300–799	(869–034–00043–6)	33.00	Jan. 1, 1998
800–End	(869–034–00044–4)	23.00	Jan. 1, 1998
16 Parts:			
0–999	(869–034–00045–2)	30.00	Jan. 1, 1998
1000–End	(869–034–00046–1)	33.00	Jan. 1, 1998
17 Parts:			
1–199	(869–032–00048–4)	21.00	Apr. 1, 1997
200–239	(869–032–00049–2)	32.00	Apr. 1, 1997
240–End	(869–032–00050–6)	40.00	Apr. 1, 1997
18 Parts:			
1–399	(869–032–00051–4)	46.00	Apr. 1, 1997
400–End	(869–034–00052–5)	13.00	Apr. 1, 1998
19 Parts:			
*1–140	(869–034–00053–3)	34.00	Apr. 1, 1998
141–199	(869–032–00054–9)	30.00	Apr. 1, 1997
200–End	(869–032–00055–7)	16.00	Apr. 1, 1997
20 Parts:			
1–399	(869–032–00056–5)	26.00	Apr. 1, 1997
400–499	(869–032–00057–3)	46.00	Apr. 1, 1997
500–End	(869–034–00058–4)	44.00	Apr. 1, 1998
21 Parts:			
1–99	(869–034–00059–2)	21.00	Apr. 1, 1998
100–169	(869–032–00060–3)	27.00	Apr. 1, 1997
*170–199	(869–034–00061–4)	28.00	Apr. 1, 1998
200–299	(869–034–00062–2)	9.00	Apr. 1, 1998
300–499	(869–032–00063–8)	50.00	Apr. 1, 1997
500–599	(869–032–00064–6)	28.00	Apr. 1, 1997
*600–799	(869–034–00065–7)	9.00	Apr. 1, 1998
800–1299	(869–032–00066–2)	31.00	Apr. 1, 1997
*1300–End	(869–034–00067–3)	12.00	Apr. 1, 1998
22 Parts:			
*1–299	(869–034–00068–1)	41.00	Apr. 1, 1998
300–End	(869–032–00069–7)	31.00	Apr. 1, 1997
23	(869–032–00070–1)	26.00	Apr. 1, 1997
24 Parts:			
0–199	(869–034–00071–1)	32.00	Apr. 1, 1998
200–499	(869–032–00072–7)	29.00	Apr. 1, 1997
500–699	(869–032–00073–5)	18.00	Apr. 1, 1997
*700–1699	(869–034–00074–6)	45.00	Apr. 1, 1998
1700–End	(869–032–00075–1)	18.00	Apr. 1, 1997
25	(869–032–00076–0)	42.00	Apr. 1, 1997
26 Parts:			
§§ 1.0-1–1.60	(869–032–00077–8)	21.00	Apr. 1, 1997
§§ 1.61–1.169	(869–032–00078–6)	44.00	Apr. 1, 1997
§§ 1.170–1.300	(869–032–00079–4)	31.00	Apr. 1, 1997
§§ 1.301–1.400	(869–032–00080–8)	22.00	Apr. 1, 1997
§§ 1.401–1.440	(869–032–00081–6)	39.00	Apr. 1, 1997
§§ 1.441-1.500	(869-034-00082-7)	29.00	Apr. 1, 1998
§§ 1.501–1.640	(869–032–00083–2)	28.00	Apr. 1, 1997
§§ 1.641–1.850	(869–032–00084–1)	33.00	Apr. 1, 1997
*§§ 1.851–1.907	(869–034–00085–1)	36.00	Apr. 1, 1998
§§ 1.908–1.1000	(869–032–00086–7)	34.00	Apr. 1, 1997
*§§ 1.1001–1.1400	(869–034–00087–8)	38.00	Apr. 1, 1998
§§ 1.1401–End	(869–032–00088–3)	45.00	Apr. 1, 1997
2–29	(869–032–00089–1)	36.00	Apr. 1, 1997
30–39	(869–032–00090–5)	25.00	Apr. 1, 1997
40–49	(869–034–00091–6)	16.00	Apr. 1, 1998
50–299	(869–034–00092–4)	19.00	Apr. 1, 1998
300–499	(869–032–00093–0)	33.00	Apr. 1, 1997
500–599	(869–034–00094–1)	10.00	Apr. 1, 1998
600–End	(869–032–00095–3)	9.50	Apr. 1, 1997
27 Parts:			
1–199	(869–032–00096–4)	48.00	Apr. 1, 1997

Title	Stock Number	Price	Revision Date
200–End	(869–034–00097–5)	17.00	[6] Apr. 1, 1997
28 Parts:			
1-42	(869–032–00098–1)	36.00	July 1, 1997
43-end	(869-032-00099-9)	30.00	July 1, 1997
29 Parts:			
0–99	(869–032–00100–5)	27.00	July 1, 1997
100–499	(869–032–00101–4)	12.00	July 1, 1997
500–899	(869–032–00102–2)	41.00	July 1, 1997
900–1899	(869–032–00103–1)	21.00	July 1, 1997
1900–1910 (§§ 1900 to 1910.999)	(869–032–00104–9)	43.00	July 1, 1997
1910 (§§ 1910.1000 to end)	(869–032–00105–7)	29.00	July 1, 1997
1911–1925	(869–032–00106–5)	19.00	July 1, 1997
1926	(869–032–00107–3)	31.00	July 1, 1997
1927–End	(869–032–00108–1)	40.00	July 1, 1997
30 Parts:			
1–199	(869–032–00109–0)	33.00	July 1, 1997
200–699	(869–032–00110–3)	28.00	July 1, 1997
700–End	(869–032–00111–1)	32.00	July 1, 1997
31 Parts:			
0–199	(869–032–00112–0)	20.00	July 1, 1997
200–End	(869–032–00113–8)	42.00	July 1, 1997
32 Parts:			
1–39, Vol. I		15.00	[2] July 1, 1984
1–39, Vol. II		19.00	[2] July 1, 1984
1–39, Vol. III		18.00	[2] July 1, 1984
1–190	(869–032–00114–6)	42.00	July 1, 1997
191–399	(869–032–00115–4)	51.00	July 1, 1997
400–629	(869–032–00116–2)	33.00	July 1, 1997
630–699	(869–032–00117–1)	22.00	July 1, 1997
700–799	(869–032–00118–9)	28.00	July 1, 1997
800–End	(869–032–00119–7)	27.00	July 1, 1997
33 Parts:			
1–124	(869–032–00120–1)	27.00	July 1, 1997
125–199	(869–032–00121–9)	36.00	July 1, 1997
200–End	(869–032–00122–7)	31.00	July 1, 1997
34 Parts:			
1–299	(869–032–00123–5)	28.00	July 1, 1997
300–399	(869–032–00124–3)	27.00	July 1, 1997
400–End	(869–032–00125–1)	44.00	July 1, 1997
35	(869–032–00126–0)	15.00	July 1, 1997
36 Parts			
1–199	(869–032–00127–8)	20.00	July 1, 1997
200–299	(869–032–00128–6)	21.00	July 1, 1997
300–End	(869–032–00129–4)	34.00	July 1, 1997
37	(869–032–00130–8)	27.00	July 1, 1997
38 Parts:			
0–17	(869–032–00131–6)	34.00	July 1, 1997
18–End	(869–032–00132–4)	38.00	July 1, 1997
39	(869–032–00133–2)	23.00	July 1, 1997
40 Parts:			
1–49	(869–032–00134–1)	31.00	July 1, 1997
50–51	(869–032–00135–9)	23.00	July 1, 1997
52 (52.01–52.1018)	(869–032–00136–7)	27.00	July 1, 1997
52 (52.1019–End)	(869–032–00137–5)	32.00	July 1, 1997
53–59	(869–032–00138–3)	14.00	July 1, 1997
60	(869–032–00139–1)	52.00	July 1, 1997
61–62	(869–032–00140–5)	19.00	July 1, 1997
63–71	(869–032–00141–3)	57.00	July 1, 1997
72–80	(869–032–00142–1)	35.00	July 1, 1997
81–85	(869–032–00143–0)	32.00	July 1, 1997
86	(869–032–00144–8)	50.00	July 1, 1997
87-135	(869–032–00145–6)	40.00	July 1, 1997
136–149	(869–032–00146–4)	35.00	July 1, 1997
150–189	(869–032–00147–2)	32.00	July 1, 1997
190–259	(869–032–00148–1)	22.00	July 1, 1997
260–265	(869–032–00149–9)	29.00	July 1, 1997
266–299	(869–032–00150–2)	24.00	July 1, 1997
300–399	(869–032–00151–1)	27.00	July 1, 1997
400–424	(869–032–00152–9)	33.00	[5] July 1, 1996
425–699	(869–032–00153–7)	40.00	July 1, 1997
700–789	(869–032–00154–5)	38.00	July 1, 1997
790–End	(869–032–00155–3)	19.00	July 1, 1997
41 Chapters:			
1, 1–1 to 1–10		13.00	[3] July 1, 1984
1, 1–11 to Appendix, 2 (2 Reserved)		13.00	[3] July 1, 1984
3–6		14.00	[3] July 1, 1984
7		6.00	[3] July 1, 1984
8		4.50	[3] July 1, 1984
9		13.00	[3] July 1, 1984
10–17		9.50	[3] July 1, 1984
18, Vol. I, Parts 1–5		13.00	[3] July 1, 1984
18, Vol. II, Parts 6–19		13.00	[3] July 1, 1984
18, Vol. III, Parts 20–52		13.00	[3] July 1, 1984
19–100		13.00	[3] July 1, 1984
1–100	(869–032–00156–1)	14.00	July 1, 1997
101	(869–032–00157–0)	36.00	July 1, 1997
102–200	(869–032–00158–8)	17.00	July 1, 1997
201–End	(869–032–00159–6)	15.00	July 1, 1997
42 Parts:			
1–399	(869–032–00160–0)	32.00	Oct. 1, 1997
400–429	(869–032–00161–8)	35.00	Oct. 1, 1997
430–End	(869–032–00162–6)	50.00	Oct. 1, 1997
43 Parts:			
1–999	(869–032–00163–4)	31.00	Oct. 1, 1997
1000–end	(869–032–00164–2)	50.00	Oct. 1, 1997
44	(869–032–00165–1)	31.00	Oct. 1, 1997
45 Parts:			
1–199	(869–032–00166–9)	30.00	Oct. 1, 1997
200–499	(869–032–00167–7)	18.00	Oct. 1, 1997
500–1199	(869–032–00168–5)	29.00	Oct. 1, 1997
1200–End	(869–032–00169–3)	39.00	Oct. 1, 1997
46 Parts:			
1–40	(869–032–00170–7)	26.00	Oct. 1, 1997
41–69	(869–032–00171–5)	22.00	Oct. 1, 1997
70–89	(869–032–00172–3)	11.00	Oct. 1, 1997
90–139	(869–032–00173–1)	27.00	Oct. 1, 1997
140–155	(869–032–00174–0)	15.00	Oct. 1, 1997
156–165	(869–032–00175–8)	20.00	Oct. 1, 1997
166–199	(869–032–00176–6)	26.00	Oct. 1, 1997
200–499	(869–032–00177–4)	21.00	Oct. 1, 1997
500–End	(869–032–00178–2)	17.00	Oct. 1, 1997
47 Parts:			
0–19	(869–032–00179–1)	34.00	Oct. 1, 1997
20–39	(869–032–00180–4)	27.00	Oct. 1, 1997
40–69	(869–032–00181–2)	23.00	Oct. 1, 1997
70–79	(869–032–00182–1)	33.00	Oct. 1, 1997
80–End	(869–032–00183–9)	43.00	Oct. 1, 1997
48 Chapters:			
1 (Parts 1–51)	(869–032–00184–7)	53.00	Oct. 1, 1997
1 (Parts 52–99)	(869–032–00185–5)	29.00	Oct. 1, 1997
2 (Parts 201–299)	(869–032–00186–3)	35.00	Oct. 1, 1997
3–6	(869–032–00187–1)	29.00	Oct. 1, 1997
7–14	(869–032–00188–0)	32.00	Oct. 1, 1997
15–28	(869–032–00189–8)	33.00	Oct. 1, 1997
29–End	(869–032–00190–1)	25.00	Oct. 1, 1997
49 Parts:			
1–99	(869–032–00191–0)	31.00	Oct. 1, 1997
100–185	(869–032–00192–8)	50.00	Oct. 1, 1997
186–199	(869–032–00193–6)	11.00	Oct. 1, 1997
200–399	(869–032–00194–4)	43.00	Oct. 1, 1997
400–999	(869–032–00195–2)	49.00	Oct. 1, 1997
1000–1199	(869–032–00196–1)	19.00	Oct. 1, 1997
1200–End	(869–032–00197–9)	14.00	Oct. 1, 1997
50 Parts:			
1–199	(869–032–00198–7)	41.00	Oct. 1, 1997
200–599	(869–032–00199–5)	22.00	Oct. 1, 1997
600–End	(869–032–00200–2)	29.00	Oct. 1, 1997
CFR Index and Findings Aids	(869–034–00049–6)	46.00	Jan. 1, 1998

Title	Stock Number	Price	Revision Date
Complete 1998 CFR set		951.00	1998
Microfiche CFR Edition:			
Subscription (mailed as issued)		247.00	1998
Individual copies		1.00	1998
Complete set (one-time mailing)		247.00	1997
Complete set (one-time mailing)		264.00	1996

[1] Because Title 3 is an annual compilation, this volume and all previous volumes should be retained as a permanent reference source.

[2] The July 1, 1985 edition of 32 CFR Parts 1–189 contains a note only for Parts 1–39 inclusive. For the full text of the Defense Acquisition Regulations in Parts 1–39, consult the three CFR volumes issued as of July 1, 1984, containing those parts.

[3] The July 1, 1985 edition of 41 CFR Chapters 1–100 contains a note only for Chapters 1 to 49 inclusive. For the full text of procurement regulations in Chapters 1 to 49, consult the eleven CFR volumes issued as of July 1, 1984 containing those chapters.

[4] No amendments to this volume were promulgated during the period July 1, 1996 to June 30, 1997. The volume issued July 1, 1996, should be retained.

[5] No amendments to this volume were promulgated during the period January 1, 1997 through December 31, 1997. The CFR volume issued as of January 1, 1997 should be retained.

[6] No amendments to this volume were promulgated during the period April 1, 1997, through April 1, 1998. The CFR volume issued as of April 1, 1997, should be retained.