matters that significantly or uniquely affect their communities.''

Today's proposed rule does not significantly or uniquely affect the communities of Indian tribal governments. This proposed action does not involve or impose any requirements that affect Indian tribes. Accordingly, the requirements of section 3(b) of Executive Order 13084 do not apply to this proposed rule.

E. Does this action result in a significant impact on a substantial number of small entities?

Under the Regulatory Flexibility Act (RFA), 5 U.S.C. 601 *et seq.*, the Agency has determined that this proposed rule would not result in a significant economic impact on a substantial number of small entities, and hereby certifies to that effect pursuant to section 605(b) of the RFA.

The export regulations implementing section 12(b) of TSCA are found at 40 CFR part 707, subpart D. These regulations require only a one-time notification to EPA for each foreign country of export for each chemical for which data are required under section 4 of TSCA. In an analysis of the economic impacts of the July 27, 1993 amendment to the rules implementing section 12(b) of TSCA (58 FR 40238), EPA estimated that the one-time cost of preparing and submitting the TSCA section 12(b) notification was $62.60. See U.S. EPA, ''Economic Analysis in Support of the Final Rule to Amend Rule Promulgated Under TSCA Section 12(b),'' OPPT/ETD/RIB, June 1992, contained in the record for this rulemaking and referenced in the first amended proposed HAPs test rule (62 FR 67166, December 24, 1997). Inflated through the last quarter of 1996 using the Consumer Price Index, the cost is estimated to be $69.56.

Although data available to EPA regarding export shipments of the HAPs chemicals are limited, an exporter would have to have annual revenues below $6,956 per chemical/country combination before the Agency would be concerned about the potential for substantive adverse impacts. EPA believes that it is reasonable to assume that few, if any, small exporters would have such small annual revenues per chemical/country combination. The Agency concludes that the export notification requirements will not have a significant impact on entities involved in exporting chemicals, regardless of whether the exporting entity is small or large.

F. Does this action involve a technical standard?

No. This proposed rule does not involve any technical standards that would require Agency consideration of voluntary consensus standards pursuant to section 12(d) of the National Technology Transfer and Advancement Act of 1995 (NTTAA), Pub. L. 104–113, section 12(d) (15 U.S.C. 272 note). Section 12(d) directs EPA to use voluntary consensus standards in its regulatory activities unless to do so would be inconsistent with applicable law or otherwise impractical. Voluntary consensus standards are technical standards (e.g., materials specifications, test methods, sampling procedures, and business practices) that are developed or adopted by voluntary consensus standards bodies. The NTTAA requires EPA to provide Congress, through OMB, explanations when the Agency decides not to use available and applicable voluntary consensus standards. EPA invites public comment on EPA's conclusion that this action does not require the consideration of voluntary consensus standards.

List of Subjects in 40 CFR Part 799

Environmental protection, Chemicals, Exports, Hazardous substances, Health, Laboratories, Reporting and recordkeeping requirements.

Dated: September 30, 1998.

Lynn R. Goldman,

Assistant Administrator for Prevention, Pesticides and Toxic Substances.

Therefore, it is proposed that 40 CFR chapter I be amended as follows:

PART 799—[AMENDED]

1. The authority citation for part 799 would continue to read as follows:

Authority: 15 U.S.C. 2603, 2611, 2625.

2. Section 799.5000 is amended by adding methyl isobutyl ketone to the table in CAS number order to read as follows:

§ 799.5000 Testing consent orders for substances and mixtures with Chemical Abstract Service Registry Numbers.

* * * * *

CAS Number	Substance or mixture name	Testing	FR Publication Date
*	*	*	*
CAS No. 108–10–1	Methyl isobutyl ketone	Health effects	[date of final rule]
*	*	*	*

* * * * *

[FR Doc. 98–27387 Filed 10–9–98; 8:45 am]

BILLING CODE 6560–50–F

DEPARTMENT OF TRANSPORTATION

National Highway Traffic Safety Administration

49 CFR Part 571

[Docket No. NHTSA–98–4515]

RIN 2127–AF43

Federal Motor Vehicle Safety Standards

AGENCY: National Highway Traffic Safety Administration (NHTSA), DOT.

ACTION: Notice of proposed rulemaking.

SUMMARY: This document proposes a new Federal motor vehicle safety standard that would establish requirements and test procedures which address safety issues exclusive to electric vehicles: Electrolyte spillage, post-crash retention of batteries in their mounts, and shock hazard. The standard would be based upon SAE J1766 FEB96 ''Recommended Practice for Electric and Hybrid Electric Vehicle Battery Systems Crash Integrity Testing,'' and be known as Standard No. 305, ''Electric-powered vehicles: electrolyte spillage and

electrical shock protection.'' Test procedures would include the frontal barrier crash test of Standard No. 208, the side moving barrier crash test of Standard No. 214, and the rollover and rear moving barrier crash tests of Standard No. 301. However, as proposed, the standard would not apply to low-speed electric vehicles regulated by Standard No. 500, and the agency is asking for comment on this issue.

DATES: Comments are due November 27, 1998.

ADDRESSES: Comments should refer to the docket number and be submitted to Docket Management, PL–401, 400 Seventh St., SW, Washington, DC 20590. Docket hours are from 10 a.m. to 4 p.m.

FOR FURTHER INFORMATION CONTACT: Charles Hott, Office of Safety Performance Standards, NHTSA (202–366–0427).

SUPPLEMENTARY INFORMATION:

Background

The 1990s may be remembered as the beginning of a new generation of electric vehicles. In mid-decade, General Motors Corporation (GM) introduced the EV1, an electric-powered passenger car, offered for lease in selected western markets in the United States. Other manufacturers, such as Honda and Nissan, have also introduced new electric vehicles (EVs). The primary impetus for the introduction of EVs into the marketplace appears to be the Clean Air Act Amendments of 1990 which included provisions for zero emission vehicles (ZEV). EVs are the only known vehicles that will meet the emission requirements for ZEVs. In California, these provisions were to become effective beginning in model year 1998, and would have required automobile manufacturers to sell, collectively, 40,000 EVs in the model year. However, those provisions were delayed by the California Air Resources Board until model year 2003. At that time, car companies will be required to meet 10 percent of their sales with ZEVs. In addition, the Energy Policy Act of 1992 requires Federal and State fleets to acquire increasing percentages of alternative fueled vehicles.

On December 27, 1991, NHTSA published an advance notice of proposed rulemaking (ANPRM) on EV safety (56 FR 67038). The purpose of that notice was to help the agency determine what existing Federal motor vehicle safety standards (FMVSS) may need modification to better accommodate the unique technology of EVs and what new FMVSS may need to be written to assure their safe introduction. The ANPRM requested comments on a broad range of potential EV safety issues including battery electrolyte spillage and electric shock hazard. The ANPRM elicited widespread public interest and 46 comments were received.

After reviewing the comments and information received in response to the ANPRM, NHTSA concluded in a November 18, 1992 notice (57 FR 54354) that it was premature to initiate rulemaking for FMVSS specific for EVs. In that notice the agency stated that further research was needed in the areas of battery electrolyte spillage and electric shock hazard.

Shortly thereafter, in 1993, NHTSA conducted research and testing on two converted EVs. These vehicles were tested as specified in FMVSS No. 208, ''Occupant Crash Protection.'' Both vehicles were equipped with flooded (i.e., filled with liquid electrolyte) lead-acid batteries located in the engine and luggage compartments in the front and rear of the vehicle. One vehicle was equipped with twelve 12-volt batteries (five in the front and seven in the rear). The other vehicle was equipped with ten 12-volt batteries (four in the front and six in the rear). Both vehicles were subjected to 48 km/h frontal crashes into a fixed barrier. In both cases the front batteries sustained significant damage, spilling large quantities of electrolyte. On one vehicle, 17.7 liters of electrolyte spilled from the front batteries as a result of the crash and in the other vehicle, 10.4 liters. In addition, electrical arcs were observed under the hood of one vehicle during the crash.

The following year, NHTSA published a notice of request for comments (59 FR 49901, September 30, 1994) to help it to assess the need to regulate battery electrolyte spillage and electric shock hazard of EVs during a crash or rollover. Thirty-two comments were received from automobile manufacturers, EV converters, and industry associations. The majority of the commenters supported some type of Federal regulation for electrolyte spillage and electric shock prevention, provided that the requirements of the regulation were performance based and not design restrictive to the extent that they might inhibit technology development. Two manufacturers, Ford Motor Company (Ford) and Nissan, and two industry associations (Electric Vehicle Industry Association and Electric Vehicles of America) did not believe that Federal regulation was necessary because electric vehicle design was constantly changing due to technological breakthroughs. However, Ford did state that it would follow the recommendation of industry associations such as the Society of Automotive Engineers (SAE) when SAE J1766 ''Recommended Practice For Electric and Hybrid Electric Vehicle Battery Systems Crash Integrity Testing'' was finally developed.

In 1995, NHTSA again conducted research and testing, this time on four EVs. Three vehicles were converted to run on electricity and one was built as an EV. The three converted vehicles were equipped with starved (i.e., electrolyte that is absorbed in an inert material to prevent leakage in case of rupture) lead-acid batteries and the vehicle built as an EV was equipped with flooded lead-acid batteries. Three vehicles were subjected to 48 km/h frontal crashes similar to the test described in FMVSS No. 208, ''Occupant Crash Protection'' and one was subjected to a 54 km/h side crash similar to the test specified in FMVSS No. 214,'' Side Impact Protection.'' Each vehicle was subjected to pre- and post-crash rollover tests to measure electrolyte spillage. The crash and rollover tests revealed that the vehicles with the starved lead-acid batteries had very little leakage (as expected because of their design), while the vehicle with the flooded lead-acid batteries leaked approximately 50 liters of electrolyte. Electrical isolation tests were also performed on these vehicles before and after each of the crash tests. Two of the converted EVs maintained their electrical isolation after the crash tests. One of the converted EVs was subjected to a side impact test. That EV chafed a wire which came in contact with the vehicle structure during the crash and did not maintain electrical isolation. The vehicle built as an EV was subjected to a frontal crash test. That vehicle lost electrical isolation when two of the battery connectors came in contact with the battery tunnel during the crash.

SAE J1766 ''Recommended Practice for Electric and Hybrid Electric Vehicle Battery Systems Crash Integrity Testing''

During NHTSA's earlier rulemaking activities, there was not yet an industry standard in place that addressed potential safety problems in EVs. Following circulation of drafts in the years previous, in February 1996, SAE published its Recommended Practice SAE J1766 ''Recommended Practice for Electric and Hybrid Electric Vehicle Battery Systems Crash Integrity Testing.'' As it notes, electric and hybrid electric vehicles contain many types of battery systems. J1766 deems adequate

barriers between occupants and battery systems necessary to provide protection from potentially harmful factors and materials within the battery system, which can cause injury to vehicle occupants during different crash scenarios.

The potentially harmful factors and materials include:

electrical isolation integrity, electrolyte spillage and liquid interactions, and retention of the battery system. Maintaining electrical isolation of the system is important to prevent hazardous shock of vehicle occupants. Electrolyte spillage and battery fluid interactions should be minimized to prevent chemical reactions and electrical conductance. The latter could lead to an electrical shock hazard.

The purpose of SAE J1766 is to define minimum performance standards and establish test methods which evaluate battery system spillage, retention, electrical system isolation, and liquid interaction in electric and hybrid electric vehicles during crash scenarios. The Recommended Practice covers all electric and hybrid electric vehicles with a GVWR of 4536 kg (10,000 lbs) or less.

SAE J1766 establishes certain performance criteria when an EV is subjected to the frontal impact procedures of FMVSS No. 208 (including the 30-degree offsets), the side impact procedures of FMVSS 214, and the rear impact procedure of FMVSS No. 301. No spillage of electrolyte into the occupant compartment is permitted. Outside the passenger compartment, electrolyte spillage is limited to 5 liters for a 30-minute period after vehicle motion ceases and throughout the post crash rollover test. Battery modules must stay restrained in the vehicle, without any component intruding into the occupant compartment. Electrical isolation between the chassis and high voltage system is at least 500 ohms per nominal volt.

Proposed Motor Vehicle Safety Standard No. 305

NHTSA is proposing that similar provisions be adopted in a new FMVSS No. 305 to afford the public protection from electrolyte spillage and electric shock hazards in crashes. The provisions are based upon those of SAE J1766 and should help ensure the safe introduction of new EVs into the marketplace.

FMVSS No. 305 would apply to all passenger cars, and to multipurpose passenger vehicles, trucks, and buses with a GVWR of 4536 kg or less, and to school buses with a GVWR over 4536 kg, that use more than 72 volts of electricity as propulsion power. This GVWR is the equivalent of 10,000 pounds. Seventy-two volts is the equivalent of six 12-volt batteries. The standard would apply to EVs with a maximum speed of more than 40 kilometers per hour, that is, greater than 25 miles per hour. The agency notes that it has recently issued a standard expressly for low-speed vehicles (LSVs), FMVSS No. 500 (63 FR 33194; June 17, 1998). LSVs are any 4-wheeled vehicles, other than trucks, with a maximum speed of not less than 32 kilometers per hour nor more than 40 kilometers per hour. EVs subject to the rule could include Neighborhood Electric Vehicles (NEVs) and those battery-powered golf cars within the speed range. FMVSS No. 500 does not require LSVs to meet FMVSS Nos. 208, 214, and 301, which contain some 48 and 54 kilometers per hour impact barrier tests proposed for FMVSS No. 305.

Under proposed FMVSS No. 305, EVs covered by the standard, other than heavy school buses, would be required to meet leakage and battery retention requirements that are essentially those of SAE J1766 after front (FMVSS No. 208), side (FMVSS No.214), and rear impact barrier crash tests (FMVSS No. 301). A static rollover test (FMVSS No. 301) would also be conducted both before and after each of these crash tests. Heavy school buses (those with a GVWR over 4536 kg) would be required to meet the same performance requirements after a moving contour barrier frontal crash test, without the pre- and post-test rollovers. The performance requirements proposed are that there shall be no electrolyte spillage in the passenger compartment, with spillage outside the compartment limited to 5 liters total in a 30-minute period following the cessation of motion after a crash test. Intrusion of the battery system components into the occupant compartment would also be prohibited. Batteries must be restrained in the vehicle in their original installations. The electric isolation value must be at least 500 ohms per nominal volt, as determined by the SAE procedure for the measurement of the insulation resistance of the propulsion battery of an EV. The standard known resistance Ro (in ohms) should be approximately 500 times the nominal operating voltage of the vehicle (in volts). The Ro is not required to be precisely this value since the equations are valid for any Ro; however, a Ro value in this range should provide good resolution for the voltage measurements.

Specific Issues for Which NHTSA Seeks Comment

1. *Costs to conform*. Commenters are asked to inform NHTSA the extent to which, if any, the proposed rule would impose costs on manufacturers of EVs to meet electrolyte spillage, battery retention, and electrical isolation test requirements.

2. *Adequacy of spillage specification*. The proposed limit of 5.0 liters, contained in SAE J1766, is based upon the amount of electrolyte that is contained in present large automotive batteries. Commenters are asked for views on whether a different amount may be more appropriate to protect the public in EV crashes.

3. *Adequacy of electrical isolation specification*. The agency is interested in commenters' views on the NHTSA/SAE electrical isolation specification of 500 ohms/volt. The SAE adopted this requirement because the sensation threshold for most humans is around 2 milliamperes and the head-to-foot resistance is about 500 ohms. This is the value at which most humans will feel a slight sensation from electrical current. NHTSA understands that the European community is looking at a similar requirement.

4. *Coverage of proposed FMVSS No. 305*. The proposed standard would not apply to vehicles that use less than 72 volts of electricity as propulsion power. NHTSA is aware that two LSVs will be produced with six 12-volt batteries totaling 72 volts, the Bombardier NV and the GEM vehicle (the Trans2 NEV design upgraded from 48 volts), and, it has tentatively decided to exclude LSVs from the final rule. However, there may be vehicles or vehicle designs whose maximum speed exceeds 40 kilometers per hour but which are powered, in whole or in part (perhaps a hybrid electric configuration), by less than 72 volts of electricity. NHTSA is interested in learning if there are any such vehicles or vehicle designs and whether it would be appropriate to apply FMVSS No. 305 to them. NHTSA notes that its LSV definition excludes trucks and asks whether those that are powered by less than 72 volts of electricity should be covered.

5. *Whether proposed FMVSS No. 305 should apply to electric LSVs*. Proposed Standard No. 305 would not apply to LSVs, i.e., passenger-carrying EVs with a maximum speed between 32 and 40 kilometers per hour. It is anticipated that a substantial portion of LSVs may be electric vehicles. NHTSA seeks the views of commenters on whether proposed FMVSS No. 305 should apply to LSVs, and, if so, whether the

proposed requirements are reasonable, practicable, and appropriate for LSVs. The tests proposed are intended to limit electrolyte spillage, battery intrusion, and shock hazard. Commenters should address each of these requirements as they might be modified to apply to electric LSVs.

6. *Rollover test.* The SAE currently recommends that the vehicle undergo a rollover test before the barrier impact test. NHTSA is concerned that damage may occur to the test vehicle during rollover that could affect the results of the barrier impact test. Accordingly, comments are requested as to whether there should be a rollover test before the barrier impact test and as to the importance of conducting a rollover test before the barrier impact test.

Proposed Effective Date

NHTSA believes that an effective date of one year after the issuance of the final rule should be sufficient for manufacturers covered by FMVSS No. 305 to comply with the proposed new safety standard. The major EV manufacturers all are using, or plan to use, battery types that are not susceptible to leaking large amounts of electrolytes and, to NHTSA's knowledge, all incorporate a device that would shut-off the propulsion battery current or prevent loss of electrical isolation in the event of a crash or short circuit.

Request for Comments

Interested persons are invited to submit comments on the proposal. It is requested but not required that 10 copies be submitted.

All comments must not exceed 15 pages in length (49 CFR 553.21). Necessary attachments may be appended to these submissions without regard to the 15-page limit. This limitation is intended to encourage commenters to detail their primary arguments in a concise fashion.

If a commenter wishes to submit certain information under a claim of confidentiality, three copies of the complete submission, including purportedly confidential business information, should be submitted to the Chief Counsel, NHTSA, at the street address given above, and seven copies from which the purportedly confidential information has been deleted should be submitted to the Docket Section. A request for confidentiality should be accompanied by a cover letter setting for the information specified in the agency's confidential business information regulation, 49 CFR part 512.

All comments received before the close of business on the comment closing date indicated above for the proposal will be considered, and will be available for examination in the docket at the above address both before and after that date. To the extent possible, comments filed after the closing date will also be considered. Comments received too late for consideration in regard to the final rule will be considered as suggestions for further rulemaking action. Comments on the proposal will be available to inspection in the docket. NHTSA will continue to file relevant information as it becomes available in the docket after the closing date and it is recommended that interested persons continue to examine the docket for new material.

Those persons desiring to be notified upon receipt of their comments in the rules docket should enclose a self-addressed stamped postcard in the envelope with their comments. Upon receiving the comments, the docket supervisor will return the postcard by mail.

Rulemaking Analyses

Executive Order 12866 and DOT Regulatory Policies and Procedures

The Office of Management and Budget has not reviewed this rulemaking action under Executive Order 12866. It has been determined that the rulemaking action is not significant under Department of Transportation regulatory policies and procedures. Informal discussions with some EV manufacturers indicate that the industry is aware of SAE J1766 and that manufacturers are planning or producing EVs with batteries designed for minimal leakage, and to shut off the current or prevent loss of electrical isolation in the event of a crash. The added costs of the proposed tests should be minimal, and the agency has asked for comments on this issue to verify its assumption. The tests of FMVSS No. 305 can be conducted as part of the FMVSS No. 208 and No. 214 certification tests, as well as the FMVSS No. 301 rollover tests if the vehicle is a hybrid fueled in part by gasoline, or contains a heater fueled by gasoline. The impacts of the proposed rule are believed to be so minimal as not to warrant preparation of a full regulatory evaluation.

Regulatory Flexibility Act

The agency has also considered the impacts of this rulemaking action in relation to the Regulatory Flexibility Act (5 U.S.C. 601 *et seq.* I certify that this rulemaking action will not have a significant economic impact upon a substantial number of small entities.

The following is NHTSA's statement providing the factual basis for the certification (5 U.S.C. 605(b)). The technology to prevent leakage of electrolytes, battery retention, and electrical isolation in the event of the crash of a battery-powered motor vehicle is simple and has been well known for years. The specifications of the industry standard, J1766, have been settled since February 1996. The agency believes that a substantial portion of the nascent EV industry is already designing its production to comport with SAE J1766. Verification of compliance with proposed FMVSS No. 305 can be determined at the same time an EV is tested for compliance with FMVSS Nos. 208 and 214 and the cost of testing to these standards should be minimally impacted. However, there would be an additional cost imposed by conducting a static rollover test in conjunction with each of these standards, as they are not otherwise required. Moreover, if an EV is not otherwise required to comply with FMVSS No. 301, there would be the added cost of a rear moving barrier impact test if the EV manufacturer chooses to certify its vehicle on the basis of an actual test rather than on engineering studies, computer simulations, mathematical calculations, or other means. Since the overall economic impact is not believed to be significant, the agency has not determined formally whether the entities affected by the rules are ''small businesses'' within the meaning of the Regulatory Flexibility Act. In NHTSA's experience, manufacturers of motor vehicles are generally not ''small businesses.'' Accordingly, no regulatory flexibility analysis has been prepared.

Executive Order 12612 (Federalism)

This action has been analyzed in accordance with the principles and criteria contained in Executive Order 12612 on ''Federalism.'' It has been determined that the rulemaking action does not have sufficient federalism implications to warrant the preparation of a Federalism Assessment.

National Environmental Policy Act

NHTSA has analyzed this rulemaking action for purposes of the National Environmental Policy Act. The rulemaking action would not have a significant effect upon the environment as it does not affect the present method of manufacturing motor vehicle lighting equipment.

Civil Justice Reform

This rule will not have any retroactive effect. Under 49 U.S.C. 30103(b)(1),

whenever a Federal motor vehicle safety standard is in effect, a state may not adopt or maintain a safety standard applicable to the same aspect of performance which is not identical to the Federal standard. Section 30161 sets forth a procedure for judicial review of final rules establishing, amending, or revoking Federal motor vehicle safety standards. That section does not require submission of a petition for reconsideration or other administrative proceedings before parties may file suit in court.

Unfunded Mandates Reform Act of 1995

The Unfunded Mandates Reform Act of 1995 (Pub. L. 104–4) requires agencies to prepare a written assessment of the cost, benefits and other effects of proposed or final rules that include a Federal mandate likely to result in the expenditure by State, local, or tribal governments, in the aggregate, or by the private sector, of more than $100 million annually. Because this proposed rule would not have a $100 million effect, no Unfunded Mandates assessment has been prepared.

List of Subjects in 49 CFR Part 571

Imports, Motor vehicle safety, Motor vehicles, Reporting and recordkeeping requirements

PART 571—FEDERAL MOTOR VEHICLE SAFETY STANDARDS

In consideration of the foregoing, 49 CFR part 571 would be amended as follows:

1. The authority citation for part 571 would continue to read as follows:

Authority: 49 U.S.C. 322, 30111, 30115, 30166; delegation of authority at 49 CFR 1.50.

2. A new § 571.305 would be added to subpart B to read as set forth below:

§ 571.305 Standard No. 305; Electric-powered vehicle: electrolyte spillage and electrical shock protection.

S1. *Scope.* This standard specifies requirements for limitation of electrolyte spillage, retention of propulsion batteries after a crash, and electrical isolation of the chassis from ionic conductance to the high-voltage system, to be met by vehicles that use electricity as propulsion power.

S2. *Purpose.* The purpose of this standard is to reduce deaths and injuries during a crash which occur because of electrolyte spillage from propulsion batteries, intrusion of propulsion battery system components into the occupant compartment, and electrical shock.

S3. *Application.* This standard applies to passenger cars, and to multipurpose passenger vehicles, trucks and buses (other than school buses) with a GVWR 4536 kg or less, that use more than 72 volts of electricity as propulsion power and whose speed attainable in 1.6 km is more than 40 km/h, on a paved level surface. This standard also applies to all school buses that use electricity as propulsion power.

S4. *Definition.*

Battery system component means any part of a battery module, interconnect, venting system, battery restraint device, and battery box or container which holds the individual battery modules.

S5. *General requirements.* Except for a school bus with a GVWR that is greater than 4536 kg , each vehicle to which this standard applies, when tested according to S6 under the conditions of S7, shall meet the requirements of S5.1, S5.2, and S5.3. Each school bus with a GVWR that is greater than 4536 kg , when tested according to S6.6 under the conditions of S7, shall meet the requirements of S5.1, S5.2, and S5.3.

S5.1 *Electrolyte spillage from propulsion batteries.* There shall be no spillage of electrolyte from propulsion batteries into the passenger compartment. Not more than 5.0 liters of electrolyte from propulsion batteries shall leak outside the passenger compartment. Spillage and leakage are measured from the time the vehicle ceases motion after a crash until 30 minutes thereafter, and throughout any static rollover, either before or after a crash test.

S5.2 *Battery retention.* Battery modules shall remain restrained in the location in which they are installed in the vehicle. No part of any battery system component shall enter the passenger compartment, as determined by a visual inspection.

S5.3 *Electrical isolation.* Electrical isolation between the battery system and the vehicle electricity-conducting structure shall be maintained at a minimum of 500 ohm/volt.

S6. *Test requirements.* Except for a school bus with a GVWR greater than 4536 kg, each vehicle to which this standard applies shall be capable of meeting the requirements of any applicable static rollover/barrier crash/static rollover test sequence, without alteration of the vehicle during the test sequence. A particular vehicle need not meet further test requirements after having been subjected to a single static rollover/barrier crash/static rollover test sequence.

S6.1 *Pre-crash test static rollover.* The vehicle shall meet the requirements of S5.1, S5.2, and S5.3, after being rotated on its longitudinal axis to each successive increment of 90 degrees before each crash test specified in S6.2, S6.3, and S6.4.

S6.2 *Frontal barrier crash.* After a static rollover, when the vehicle traveling longitudinally forward at any speed, up to and including 48 km/h impacts a fixed collision barrier that is perpendicular to the line of travel of the vehicle, or at any angle up to 30 degrees in either direction from the perpendicular to the line of travel of the vehicle, with the 50th percentile male test dummies as specified in part 572 of this chapter at each front outboard designated position and at any other position whose protection system is required to be tested by a dummy under the provisions of Standard No. 208, under the applicable conditions of S7, the vehicle shall meet the requirements of S5.1, S5.2, and S5.3.

S6.3 *Rear moving barrier crash.* After a static rollover, when the vehicle is impacted from the rear by a barrier moving at 48 km/h with 50th percentile male test dummies as specified in part 572 of this chapter at each front outboard designated seating position, under the applicable conditions of S7, the vehicle shall meet the requirements of S5.1, S5.2, and S5.3.

S6.4 *Side impact moving deformable barrier crash.* After a static rollover, when the vehicle is impacted from the side by a deformable barrier moving at 54 km/h, the vehicle shall meet the requirements of S5.1, S5.2, and S5.3.

S6.5 *Post-crash test static rollover.* The vehicle shall meet the requirements of S5.1, S5.2, and S5.3, after being rotated on its longitudinal axis to each successive increment of 90 degrees after each crash test specified in S6.2, S6.3, and S6.4.

S6.6 *Moving contoured barrier crash for school buses with a GVWR greater than 4536 kg.* When a moving contoured barrier assembly is traveling longitudinally forward at any speed up to and including 48 km/h and impacts a school bus with a GVWR greater than 4536 kg at any point and any angle, the school bus shall meet the requirements of S5.1, S5.2, and S5.3.

S7. *Test conditions.* When the vehicle is tested according to S6, the requirements of S5 shall be met under the following conditions. Where a range is specified, the vehicle must be capable of meeting the requirements at all points within the range.

S7.1 *Battery state of charge.* The battery system is charged using the vehicle manufacturer's recommended charging system. All tests are performed with the propulsion batteries charged to not less than 95 percent capacity.

S7.2 *Vehicle conditions.* The switch or device that provides power from the propulsion batteries to the propulsion motor(s) is in the activated position or the ready to drive position.

S7.2.1 The parking brake is disengaged and the transmission, if any, is in the neutral position. In a test conducted under S6.6, the parking brake is set.

S7.2.2 Tires are inflated to the manufacturer's specifications.

S7.2.3 The vehicle, including test devices and instrumentation, is loaded as follows:

(a) A passenger car is loaded to its unloaded vehicle weight plus its rated cargo and luggage capacity weight, secured in the luggage area, plus the necessary test dummies as specified in S6, restrained only by means that are installed in the vehicle for protection at its seating position.

(b) A multipurpose passenger vehicle, truck, or bus with a GVWR of 4536 kg or less is loaded to its unloaded vehicle weight plus the necessary test dummies, as specified in S6., plus 136 kg or its rated cargo and luggage capacity weight, whichever is less. Each dummy shall be restrained only by means that are installed in the vehicle for protection at its seating position.

(c) A school bus with a GVWR greater than 4536 kg is loaded to its unloaded vehicle weight plus 54.4 kg at each designated seating position.

S7.3 *Static rollover test conditions.* In addition to the conditions of S7.1 and S7.2, the conditions of S7.4 of § 571.301 apply to the conduct of static rollover tests specified in S6.1 and S6.5.

S7.4 *Rear moving barrier crash test conditions.* In addition to the conditions of S7.1 and S7.2, the conditions of S7.3 of § 571.301 apply to the conduct of the rear moving barrier crash test specified in S6.3. The rear moving barrier is described in S8.2 of § 571.208 and diagramed in Figure 1 of § 571.301.

S7.5 *Side impact moving deformable barrier crash test conditions.* In addition to the conditions of S7.1 and S7.2, the conditions of S6.10, S6.11, and S6.12 of § 571.214 apply to the conduct of the side impact moving deformable barrier crash specified in S6.4.

S7.6 *Moving contoured barrier crash.* In addition to the conditions of S7.1 and S7.2, the conditions of S7.5 of § 571.301 apply to the conduct of the moving contoured barrier crash test specified in S6.6.

S7.7 *Electrical isolation test procedure.* In addition to the conditions of S7.1 and S7.2, the following conditions apply to the measurement of electrical isolation specified in S5.3.

S7.7.1 The propulsion battery system is connected to the vehicle's propulsion system, and the vehicle ignition is in the ''on'' (traction (propulsion) system energized) position.

S7.7.2 The voltmeter used in this test measures direct current values and has an internal resistance of at least 10 MΩ.

S7.7.3 The voltage is measured as shown in figure 1 and the propulsion battery voltage (Vb) is recorded. Before any vehicle crash test, Vb must be equal to or greater than the nominal operating voltage as specified by the vehicle manufacturer. It is anticipated that Vb after the crash will be approximately the same as Vb before the crash. After the crash, a Vb greater than zero is required in order to conduct the remainder of this procedure. If Vb after the crash is zero, this indicates that a short across the propulsion battery has occurred, which precludes the remainder of this test procedure. A short across the propulsion battery may be conspicuous by virtue of arcing, fire, and/or component meltdown.

S7.7.4 The voltage is measured as shown in figure 2 and the voltage (V1) between negative side of the propulsion battery and the vehicle chassis is recorded.

BILLING CODE 4910–59–P

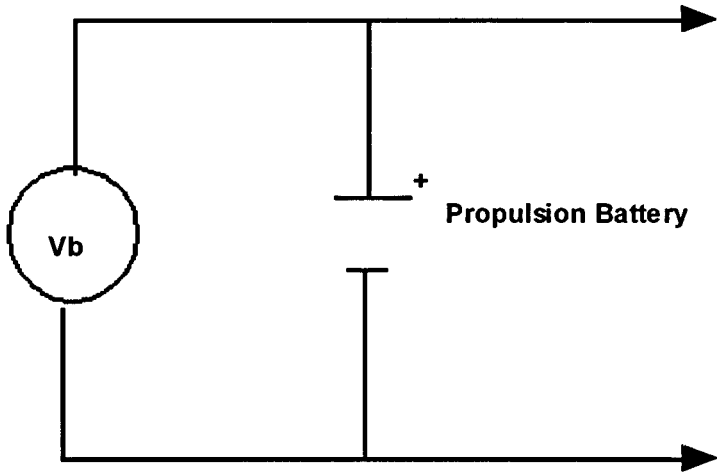

Fig. 1 S7.7.3 MEASUREMENT LOCATION FOR V1 VOLTAGE

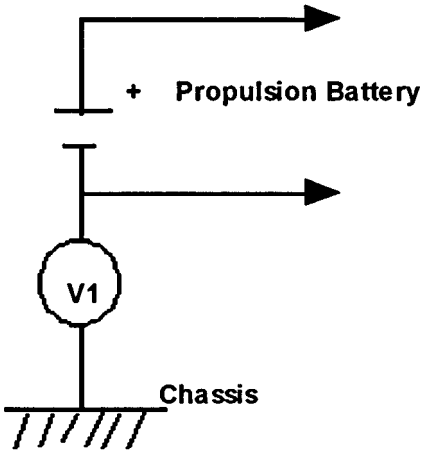

Fig. 2 S7.7.4 MEASUREMENT LOCATION FOR V1 VOLTAGE

S7.7.5 The voltage is measured as shown in figure 3 and the voltage (V2) between the positive side of the propulsion battery and the vehicle chassis is recorded. It is anticipated that the sum of the absolute values of V1 and of V2 will approximate the absolute value of Vb.

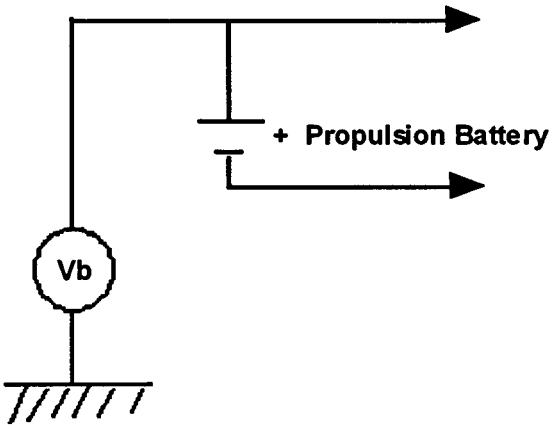

Fig. 3 S7.7.5 MEASUREMENT LOCATION FOR V2 VOLTAGE

S7.7.6 If V1 is greater than or equal to V2, insert a standard known resistance (Ro) between the negative side of the propulsion battery and the vehicle chassis. With the Ro installed, measure the voltage (V1'') as shown in figure 4 between the negative side of the propulsion battery and the vehicle chassis. Calculate the electrical isolation (Ri) according to the formula shown. This electrical isolation value (in ohms) divided by the nominal operating voltage of the propulsion battery (in volts) must be equal to or greater than 500.

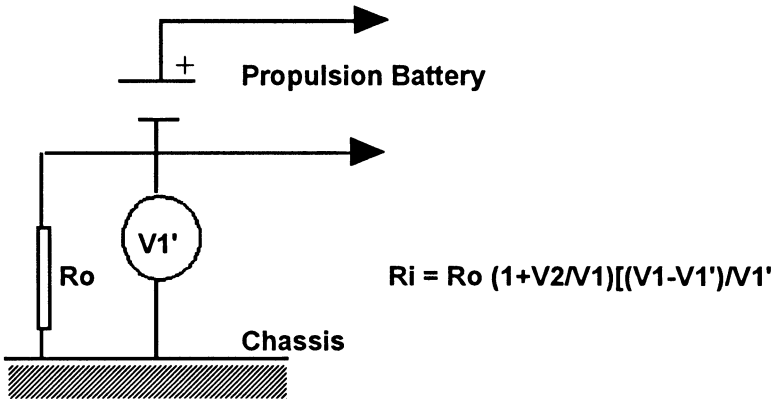

Fig. 4 S7.7.6 MEASUREMENT LOCATION FORV1' VOLTAGE

S7.7.7 If V2 is greater than V1, insert a standard known resistance (Ro) between the positive side of the propulsion battery and the vehicle chassis. With the Ro installed, measure the voltage and record the voltage (V2') between the positive side of the propulsion battery and the vehicle chassis as shown in figure 5. Calculate the electrical isolation (Ri) according to the formula shown. This electrical isolation value (in ohms) divided by the nominal operating voltage of the propulsion battery (in volts) must be equal to or greater than 500.

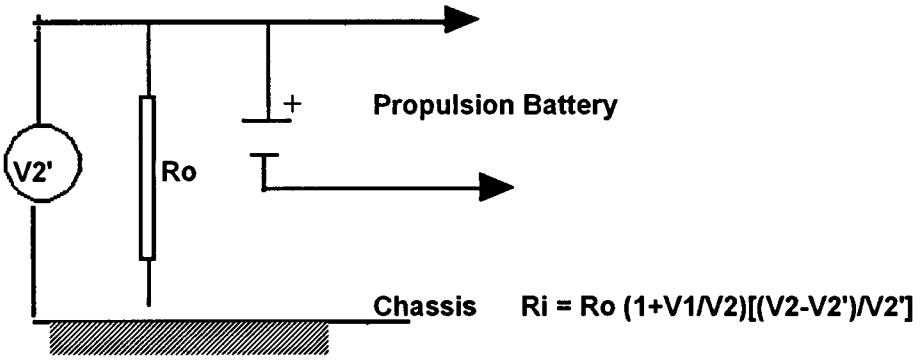

Fig. 5 S7.7.7 MEASUREMENT LOCATION FORV2' VOLTAGE

Issued on: October 1, 1998.

L. Robert Shelton,

Associate Administrator for Safety Performance Standards.

[FR Doc. 9826796 Filed 10–9–98; 8:45 am]

BILLING CODE 4910–59–C

DEPARTMENT OF THE INTERIOR

Fish and Wildlife Service

50 CFR Part 17

RIN 1018–AE86

Endangered and Threatened Wildlife and Plants; Reopening of Comment Period on Proposed Endangered Status for Devils River Minnow (Dionda diaboli)

AGENCY: Fish and Wildlife Service, Interior.

ACTION: Proposed rule; reopening of comment period.

SUMMARY: The U.S. Fish and Wildlife Service (Service) gives notice that the comment period on the proposed determination of endangered status for the Devils River minnow (*Dionda diaboli*) is reopened. This fish is found in Val Verde and Kinney counties, Texas, and Coahuila, Mexico. All interested parties are invited to submit comments on this proposal.

DATES: The comment period, which originally closed on July 27, 1998, now closes November 12, 1998.

ADDRESSES: Written comments and materials concerning the proposal should be sent to the Field Supervisor, Austin Ecological Services Field Office, U.S. Fish and Wildlife Service, 10711 Burnet Road, Suite 200, Austin, Texas, 78758. Comments and materials received will be available for public inspection, by appointment, during normal business hours at the above address.

FOR FURTHER INFORMATION CONTACT: Nathan Allan, Fish and Wildlife Biologist (see **ADDRESSES** section) (telephone 512/490–0057; facsimile 512/490–0974).

SUPPLEMENTARY INFORMATION:

Background

The current range of the Devils River minnow is limited to three stream systems in Val Verde and Kinney counties, Texas, and one drainage in Coahuila, Mexico. The species' range has been significantly contracted and fragmented. In addition, the numbers of Devils River minnows collected during fish surveys has declined dramatically over the past 25 years; the species has declined from one of the most abundant fish to one of the least abundant. Based on the current information, the decline of the species in both distribution and abundance may be attributed in large part to the effects of habitat loss and modification and the introduction of nonnative fish into habitats of the Devils River minnow.

On March 27, 1998, the Service published a proposed rule to list the Devils River minnow as endangered under the Endangered Species Act (Act) of 1973, as amended (63 FR 14885–14892). Section 4(b)(5)(E) of the Act requires that a public hearing be held if requested within 45 days of the proposal's publication in the **Federal Register**. Because of the past public interest in the listing of this species, the Service opened the public comment period for 120 days and held a public hearing on May 28, 1998, in Del Rio, Texas. A notice of the public hearing was published in the **Federal Register** on May 14, 1998. Over 40 individuals attended the hearing and made 19 oral comments. Also, a number of written comments were received during the original comment period. All of these comments will be considered in the final determination on whether or not to add the species to the list of threatened and endangered species.

The purpose of reopening the comment period at this time is to accept public comments on the proposal to list the Devils River minnow as an endangered species in light of new information that has been received by the Service. New information on the distribution and abundance of the species has been provided by the Texas Parks and Wildlife Department (Department). In addition, a Conservation Agreement for the Devils River minnow between the Service, the Department, and the City of Del Rio was signed on September 2, 1998.

On May 28, 1998, biologists from the Department collected about 140 Devils River minnows from Phillips Creek. Phillips Creek is a small tributary,