DEPARTMENT OF AGRICULTURE

Rural Utilities Service

7 CFR Part 1755

RUS Standard for Service Installations at Customer Access Locations

AGENCY: Rural Utilities Service, USDA.

ACTION: Proposed rule.

SUMMARY: The Rural Utilities Service (RUS) proposes to amend its regulations on Telecommunications Standards and Specifications for Materials, Equipment and Construction, by rescinding RUS Bulletin 345–52, RUS Standard for Service Entrance and Station Protector Installations, PC–5A, and codifying the revised standard in the Code of Federal Regulations as RUS Standard for Service Installations at Customer Access Locations. The revised standard will update the installation methods used for installing aerial and buried service drops, network interface devices, fused primary station protectors, and protected building entrance terminals at customer access locations as a result of technological advancements made in installation practices and materials over the past 17 years.

DATES: Comments concerning this proposed rule must be received by RUS or be postmarked no later February 19, 1999.

ADDRESSES: Comments should be mailed to the Orren E. Cameron III, Director, Telecommunications Standards Division, Rural Utilities Service, U.S. Department of Agriculture, 1400 Independence Avenue, SW., STOP 1598, Washington, DC 20250–1598. RUS requests an original and three copies of all comments (7 CFR part 1700). All comments received will be made available for public inspection at room 2835, South Building, U.S. Department of Agriculture, 1400 Independence Avenue, SW., STOP 1598 Washington, DC 20250–1598 between 8 a.m. and 4 p.m. (7 CFR 1.27(b)).

FOR FURTHER INFORMATION CONTACT: Charlie I. Harper, Jr., Chief, Outside Plant Branch, Telecommunications Standards Division, Rural Utilities Service, U.S. Department of Agriculture, 1400 Independence Avenue, SW., STOP 1598, Washington, DC 20250–1598, telephone (202) 720–0667.

SUPPLEMENTARY INFORMATION:

Executive Order 12866

This proposed rule is exempt from the Office of Management and Budget (OMB) review for purposes of Executive Order 12866 and, therefore has not been reviewed by OMB.

Executive Order 12988

This proposed rule has been reviewed under Executive Order 12988, Civil Justice Reform. RUS has determined that this proposed rule meets the applicable standards provided in section 3 of that Executive Order. In addition, all State and local laws and regulations that are in conflict with this rule will be preempted, no retroactive effort will be given to this rule, and, in accordance with section 212(c) of the Department of Agriculture Reorganization Act of 1994 (7 U.S.C. 6912(c)), administrative appeal procedures must be exhausted before an action against the Department or its agencies may be initiated.

Regulatory Flexibility Act Certification

The Administrator RUS has determined that this proposed rule will not have a significant impact on a substantial number of small entities, as defined by the Regulatory Flexibility Act (5 U.S.C. 601 *et seq.*). This proposed rule involves standards and specifications, which may increase the direct-short term costs to the RUS borrower. However, the long-term direct economic costs are reduced through greater durability and lower maintenance cost over time. Small entities are not subjected to any requirement which are not applied equally to large entities.

Information Collection and Recordkeeping Requirements

This proposed rule contains no information collection or recordkeeping requirements under the Paperwork Reduction Act of 1995 (44 U.S.C. Chapter 35, as amended).

National Environmental Policy Act Certification

The Administrator of RUS has determined that this proposed rule will not significantly affect the quality of the human environment as defined by the National Environmental Policy Act of 1969 (42 U.S.C. 4321 *et seq.*). Therefore, this action does not require an environmental impact statement or assessment.

Catalog of Federal Domestic Assistance

The program described by this proposed rule is listed in the Catalog of Federal Domestic Assistance programs under No. 10.851, Rural Telephone Loans and Loan Guarantees, and No. 10.852, Rural Telephone Bank Loans. This catalog is available on a subscription basis from the Superintendent of Documents, the United States Government Printing Office, Washington, DC 20402.

Executive Order 12372

This proposed rule is excluded from the scope of Executive Order 12372, Intergovernmental Consultation, which may require consultation with State and local officials. A Notice of Final rule titled Department Programs and Activities Excluded from Executive Order 12372 (50 FR 47034) exempts RUS and RTB loans and loan guarantees, and RTB bank loans, to governmental and nongovernmental entities from coverage under this Order.

Unfunded Mandates

This proposed rule contains no Federal mandates (under the regulatory provision of Title II of the Unfunded Mandates Reform Act) for State, local, and tribal governments or the private sector. Thus this proposed rule is not subject to the requirements of section 202 and 205 of the Unfunded Mandates Reform Act.

Background

RUS issues publications titled ''Bulletin'' which serve to guide borrowers regarding already codified policy, procedures, and requirements needed to manage loans, loan guarantee programs, and the security instruments which provide for and secure RUS financing. RUS issues standards and specifications for the construction of telecommunications facilities financed with RUS loan funds. RUS is proposing to rescind Bulletin 345–52, RUS Standard for Service Entrance and Station Protector Installations, PC–5A, and to codify the revised standard at 7 CFR 1755.500 through 7 CFR 1755.510, RUS Standard for Service Installations at Customer Access Locations.

RUS Bulletin 345–52 is used by borrowers and contractors as an outside plant construction standard for the installation of aerial and buried service drops and primary station protectors at customer residences. Because of technological advancements and national code changes made in customer drop and protector installation methods and materials over the past 17 years, the installation methods and materials specified in the current standard have become outdated. To allow borrowers and contractors to observe current codes and take advantage of these improved installation methods and materials which will reduce installation costs, the current standard will be revised to update the customer access location installation methods and materials to reflect these improved methods and materials.

This action will allow borrowers and contractors an economical and efficient

means of reducing their construction costs through the use of improved customer access location installation methods and materials.

While this proposed rule proposes to codify the full text of this contract, RUS is considering a new procedure under which we will no longer publish the full text of construction contracts such as this in the CFR. Consequently, it is contemplated that at the final rule stage, the full text of this contract will not appear in codified text.

List of Subjects in 7 CFR Part 1755

Incorporation by reference, Loan programs—communications, Reporting and recordkeeping requirements, Rural areas, Telephone.

For reasons set out in the preamble, RUS proposes to amend Chapter XVII of title 7 of the Code of Federal Regulations as follows:

PART 1755—TELECOMMUNICATIONS STANDARDS AND SPECIFICATIONS FOR MATERIALS, EQUIPMENT AND CONSTRUCTION

1. The authority citation for part 1755 continues to read as follows:

Authority: 7 U.S.C. 901 *et seq.*, 1921 *et seq.*, 6941 *et seq.*

§ 1755.97 [Amended]

2. Section 1755.97 is amended by removing the entry RUS Bulletin 345–52 from the table.

3. Section 1755.98 is amended by adding the entry 1755.500 through 1755.510 to the table in numerical order to read as follows:

§ 1755.98 List of telephone standards and specifications included in other 7 CFR parts.

* * * * *

Section	Issue date	Title
* *	* *	* * *
1755.500 through 1755.510	[Effective date of final rule]	RUS Standard for Service Installations at Customer Access Locations.
* *	* *	* * *

4. Sections 1755.500 through 1755.510 are added to read as follows:

§ 1755.500 RUS standard for service installations at customers access locations.

(a) Sections 1755.501 through 1755.510 cover service installations at permanent or mobile home customer access locations. Sections 1755.501 through 1755.510 do not cover service installations at customer access locations associated with boat yards or marinas.

(b) Service installations for customer access locations in boat yards or marinas shall be performed in accordance with Article 800, Communications Circuits, of the American National Standards Institute/National Fire Protection Association (ANSI/NFPA) 70–1996, *National Electrical Code®* (*NEC®*). The *National Electrical Code®* and *NEC®* are registered trademarks of the National Fire Protection Association, Inc., Quincy, MA 02269. The ANSI/NFPA 70–1996, *NEC®* is incorporated by reference in accordance with 5 U.S.C. 552(a) and 1 CFR part 51. Copies are available from NFPA, 1 Batterymarch Park, P. O. Box 9101, Quincy, Massachusetts 02269–9101, telephone number 1 (800) 344–3555. Copies of ANSI/NFPA 70–1996, *NEC®*, are available for inspection during normal business hours at Rural Utilities Service (RUS), room 2845, U.S. Department of Agriculture, 1400 Independence Avenue, SW., STOP 1598, Washington, DC 20250–1598 or at the Office of the Federal Register, 800 North Capitol Street, NW., suite 700, Washington, DC.

§ 1755.501 Definitions.

(a) For the purpose of this section and §§ 1755.502 through 1755.510, the following terms shall have the following meanings:

American National Standards Institute (ANSI). A private sector standards coordinating body which serves as the United States source and information center for all American National Standards.

Ampacity. As defined in the ANSI/NFPA 70–1996, *NEC®*: The current in amperes that a conductor can carry continuously under the conditions of use without exceeding its temperature rating. (Reprinted with permission from NFPA 70–1996, the *National Electrical Code®*, Copyright© 1995, National Fire Protection Association, Quincy, MA 02269. This reprinted material is not the complete and official position of the National Fire Protection Association, on the referenced subject which is represented only by the standard in its entirety.). The *National Electrical Code®* and *NEC®* are registered trademarks of the National Fire Protection Association, Inc., Quincy, MA 02269. The ANSI/NFPA 70–1996, *NEC®*, is incorporated by reference in accordance with 5 U.S.C. 552(a) and 1 CFR part 51. Copies are available from NFPA, 1 Batterymarch Park, P. O. Box 9101, Quincy, Massachusetts 02269–9101, telephone number 1 (800) 344–3555. Copies of ANSI/NFPA 70–1996, *NEC®*, are available for inspection during normal business hours at RUS, room 2845, U.S. Department of Agriculture, 1400 Independence Avenue, SW., STOP 1598, Washington, DC 20250–1598 or at the Office of the Federal Register, 800 North Capitol Street, NW., suite 700, Washington, DC.

Bonding. The permanent joining of metallic parts to form an electrically conductive path that will ensure electrical continuity and the capacity to conduct safely any current likely to be imposed.

Bonding harness wire. A reliable electrical conductor purposefully connected between metal parts which are required to be electrically connected (bonded) to one another to ensure the metal parts are at similar electrical potential.

Building entrance terminal (BET). A BET is comprised of a housing suitable for indoor and outdoor installation which contains quick-connect or binding post terminals for terminating both telecommunications service cable conductors and inside wiring cable conductors. The BET also includes primary station protectors and a means of terminating the metallic shields of service entrance cables.

Demarcation point (DP). As defined in the Federal Communications Commission (FCC) rules in 47 CFR Part 68: The point of demarcation or interconnection between telecommunications company communications facilities and terminal equipment, protective apparatus, or wiring at a subscriber's premises. Carrier-installed facilities at, or constituting, the demarcation point shall consist of wire or a jack conforming to subpart F of 47 CFR part 68. ''Premises'' as used herein generally

means a dwelling unit, other building or a legal unit of real property such as a lot on which a dwelling unit is located, as determined by the telecommunications company's reasonable and nondiscriminatory standard operating practices. The ''minimum point of entry'' as used herein shall be either the closest practicable point to where the wiring crosses a property line or the closest practicable point to where the wiring enters a multiunit building or buildings. The telecommunications company's reasonable and nondiscriminatory standard operating practices shall determine which shall apply. The telecommunications company is not precluded from establishing reasonable clarifications of multiunit premises for determining which shall apply. Multiunit premises include, but are not limited to, residential, commercial, shopping center, and campus situations.

(1) *Single unit installations.* For single unit installations existing as of August 13, 1990, and installations installed after that date, the demarcation point shall be a point within 12 inches (in.) [305 millimeters (mm)] of the primary protector, where there is no protector, within 12 in. (305 mm) of where the telecommunications wire enters the customer's premises.

(2) *Multiunit installations.* (i) In multiunit premises existing as of August 13, 1990, the demarcation point shall be determined in accordance with the local carrier's reasonable and nondiscriminatory standard operating practices. Provided, however, that where there are multiple demarcation points within the multiunit premises, a demarcation point for a customer shall not be further inside the customer's premises than a point 12 in. (305 mm) from where the wiring enters the customer's premises.

(ii) In multiunit premises in which wiring is installed after August 13, 1990, including additions, modifications, and rearrangements of wiring existing prior to that date, the telecommunications company may establish a reasonable and nondiscriminatory practice of placing the demarcation point at the minimum point of entry. If the telecommunications company does not elect to establish a practice of placing the demarcation point at the minimum point of entry, the multiunit premises owner shall determine the location of the demarcation point or points. The multiunit premises owner shall determine whether there shall be a single demarcation point for all customers or separate such locations for each customer. Provided, however, that where there are multiple demarcation points within the multiunit premises, a demarcation point for a customer shall not be further inside the customer's premises than a point 12 in. (305 mm) from where the wiring enters the customer's premises.

Fuse link. As defined in the ANSI/NFPA 70–1996, *NEC®*: A fine gauge section of wire or cable that serves as a fuse (that is, open-circuits to interrupt the current should it become excessive) that coordinates with the telecommunications cable and wire plant, and protective devices. (Reprinted with permission from NFPA 70–1996, the *National Electrical Code®*, Copyright© 1995, National Fire Protection Association, Quincy, MA 02269. This reprinted material is not the complete and official position of the National Fire Protection Association, on the referenced subject which is represented only by the standard in its entirety.)

Grounding conductor. As defined in the ANSI/NFPA 70–1996, *NEC®*: A conductor used to connect equipment or the grounded circuit of a wiring system to a grounding electrode or electrodes. (Reprinted with permission from NFPA 70–1996, the *National Electrical Code®*, Copyright© 1995, National Fire Protection Association, Quincy, MA 02269. This reprinted material is not the complete and official position of the National Fire Protection Association, on the referenced subject which is represented only by the standard in its entirety.)

Listed. As defined in the ANSI/NFPA 70–1996, *NEC®*: Equipment or materials included in a list published by an organization acceptable to the authority having jurisdiction and concerned with product evaluation, that maintains periodic inspection of production of listed equipment or materials, and whose listing states either that the equipment or material meets appropriate designated standards or has been tested and found suitable for use in a specified manner. (Reprinted with permission from NFPA 70–1996, the *National Electrical Code®*, Copyright© 1995, National Fire Protection Association, Quincy, MA 02269. This reprinted material is not the complete and official position of the National Fire Protection Association, on the referenced subject which is represented only by the standard in its entirety.)

Manufactured home. As defined in the ANSI/NFPA 70–1996, *NEC®*: A factory-assembled structure or structures transported in one or more sections, that is built on a permanent chassis and designed to be used as a dwelling with a permanent foundation acceptable to the authority having jurisdiction where connected to the required utilities, and includes the plumbing, heating, air conditioning, and electric systems contained therein. Unless otherwise indicated, the term ''mobile home'' includes manufactured homes. (Reprinted with permission from NFPA 70–1996, the *National Electrical Code®*, Copyright© 1995, National Fire Protection Association, Quincy, MA 02269. This reprinted material is not the complete and official position of the National Fire Protection Association, on the referenced subject which is represented only by the standard in its entirety.)

Mobile home. As defined in the ANSI/NFPA 70–1996, *NEC®*: A factory-assembled structure or structures transportable in one or more sections, that is built on a permanent chassis and designed to be used as a dwelling without a permanent foundation where connected to the required utilities, and includes the plumbing, heating, air-conditioning, and electric systems contained therein. Unless otherwise indicated, the term ''mobile home'' includes manufactured homes. (Reprinted with permission from NFPA 70–1996, the *National Electrical Code®*, Copyright© 1995, National Fire Protection Association, Quincy, MA 02269. This reprinted material is not the complete and official position of the National Fire Protection Association, on the referenced subject which is represented only by the standard in its entirety.)

Motor home. As defined in the ANSI/NFPA 70–1996, *NEC®*: A vehicular unit designed to provide temporary living quarters for recreational, camping, or travel use built on or permanently attached to a self-propelled motor vehicle chassis or on a chassis cab or van that is an integral part of the completed vehicle. (Reprinted with permission from NFPA 70–1996, the *National Electrical Code®*, Copyright© 1995, National Fire Protection Association, Quincy, MA 02269. This reprinted material is not the complete and official position of the National Fire Protection Association, on the referenced subject which is represented only by the standard in its entirety.)

Network interface device (NID). A NID is comprised of a housing suitable for outdoor installation which contains a compartment accessible by only telecommunications employees which includes a primary station protector and the means for terminating telecommunications service wire conductors and metallic shields, and a compartment accessible by customers which includes an RJ–11 plug and jack

of the type specified in part 68 of FCC rules and regulations.

Primary station protector. An assembly which complies with RUS Bulletin 345–39, RUS Specification for Telephone Station Protectors. Copies of RUS Bulletin 345–39 are available upon request from RUS, U.S. Department of Agriculture (USDA), 1400 Independence Avenue, SW., STOP 1522, Washington, DC 20250–1522, FAX (202) 690–2268.

Recreational vehicle. As defined in the ANSI/NFPA 70–1996, NEC®: A vehicular-type unit designed to provide temporary living quarters for recreational, camping, or travel use, which either has its own motive power or is mounted on or drawn by another vehicle. The basic entities are: travel trailer, camping trailer, truck camper, and motor home. (Reprinted with permission from NFPA 70–1996, the *National Electrical Code®*, Copyright© 1995, National Fire Protection Association, Quincy, MA 02269. This reprinted material is not the complete and official position of the National Fire Protection Association, on the referenced subject which is represented only by the standard in its entirety.)

RUS accepted (material and equipment). Equipment which RUS has reviewed and determined that:

(1) Final assembly or manufacture of the equipment is completed in the United States, its territories and possessions, or in an eligible country;

(2) The cost of components within the material or equipment manufactured in the United States, its territories and possessions, or in an eligible country is more than 50 percent of the total cost of all components used in the material or equipment; and

(3) The material or equipment is suitable for use on systems of RUS telecommunications borrowers.

RUS technically accepted (material and equipment). Equipment which RUS has reviewed and determined that:

(1) Final assembly or manufacture of the equipment is not completed in the United States, its territories and possessions, or in an eligible country;

(2) The cost of components within the material or equipment manufactured in the United States, its territories and possessions, or in an eligible country is 50 percent or less than the total cost of all components used in the material or equipment; and

(3) The material or equipment is suitable for use on systems of RUS telecommunications borrowers.

Travel trailer. As defined in the ANSI/NFPA 70–1996, *NEC®*: A vehicular unit mounted on wheels, designed to provide temporary living quarters for recreational, camping, or travel use, of such size and weight as to not require special highway movement permits when towed by a motorized vehicle and of gross trailer area less than 320 square feet (29.77 square meters). (Reprinted with permission from NFPA 70–1996, the *National Electrical Code®*, Copyright© 1995, National Fire Protection Association, Quincy, MA 02269. This reprinted material is not the complete and official position of the National Fire Protection Association, on the referenced subject which is represented only by the standard in its entirety.)

Truck camper. As defined in the ANSI/NFPA 70–1996, *NEC®*: A portable unit constructed to provide temporary living quarters for recreational, travel or camping use, consisting of a roof, floor, and sides, designed to be loaded onto and unloaded from the bed of a pick-up truck. (Reprinted with permission from NFPA 70–1996, the *National Electrical Code®*, Copyright© 1995, National Fire Protection Association, Quincy, MA 02269. This reprinted material is not the complete and official position of the National Fire Protection Association, on the referenced subject which is represented only by the standard in its entirety.)

§ 1755.502 Scope.

(a) Sections 1755.503 through 1755.510 cover approved methods of making service installations at customer access locations in telecommunications systems of RUS borrowers.

(b) Requirements in §§ 1755.503 through 1755.510 cover facilities of the type described in the FCC rules in 47 CFR part 68 for one and multi-party customer owned premises wiring.

§ 1755.503 General.

(a) For the purposes of this section and §§ 1755.504 through 1755.510, a NID shall be as defined in § 1755.501 and shall contain both a fuseless primary station protector and a modular plug and jack for each conductor pair, up to a maximum of eleven (11) pairs, and shall be provided by the telecommunications company and used by customers.

(b) For the purposes of this section and §§ 1755.504 through 1755.510, a BET shall be as defined in § 1755.501 and shall contain both primary station protectors and connector terminals for each conductor pair, of twelve (12) or more pairs, and shall be provided by the telecommunications company and used by customers. The primary station protectors may be either fuseless or fused.

(c) The requirements provided in this section and §§ 1755.504 through 1755.510 have been designed to coordinate with the provisions of the ANSI/NFPA 70–1996, *NEC®*, and the American National Standards Institute/Institute of Electrical and Electronics Engineers, Inc. (ANSI/IEEE) C2–1997, National Electrical Safety Code (NESC). The *National Electrical Code®* and *NEC®* are registered trademarks of the National Fire Protection Association, Inc., Quincy, MA 02269. The ANSI/NFPA 70–1996, *NEC®*, and the ANSI/IEEE C2–1997, NESC, are incorporated by reference in accordance with 5 U.S.C. 552(a) and 1 CFR part 51. Copies of ANSI/NFPA 70–1996, *NEC®*, are available from NFPA, 1 Batterymarch Park, P. O. Box 9101, Quincy, Massachusetts 02269—9101, telephone number 1 (800) 344–3555. Copies of ANSI/IEEE C2—1997, NESC, are available from IEEE Service Center, 455 Hoes Lane, Piscataway, New Jersey 08854, telephone number 1 (800) 678–4333. Copies of the ANSI/NFPA 70–1996, *NEC®*, and the ANSI/IEEE C2–1997, NESC, are available for inspection during normal business hours at RUS, room 2845, U.S. Department of Agriculture, 1400 Independence Avenue, SW., STOP 1598, Washington, DC 20250–1598 or at the Office of the Federal Register, 800 North Capitol Street, NW., suite 700, Washington, DC. Most state and local authorities require that utility construction comply with either the ANSI/NFPA 70–1996, *NEC®*, and ANSI/IEEE C2–1997, NESC, or some earlier editions of the ANSI/NFPA 70, *NEC®*, and ANSI/IEEE C2, NESC. Some authorities have their own more stringent codes which may or may not be embellishments of the ANSI/NFPA 70, *NEC®*, and ANSI/IEEE C2, NESC.

(d) RUS borrowers shall make certain that all construction financed with RUS loan funds comply with:

(1) The provisions of this section and §§ 1755.504 through 1755.510 and the ANSI/NFPA 70–1996, *NEC®*, and ANSI/IEEE C2–1997, NESC codes, or any more stringent local codes; or

(2) The provisions of this section and §§ 1755.504 through 1755.510 with borrower added adjustments to bring construction into compliance with any more stringent local codes.

(e) This section and §§ 1755.504 through 1755.510 are intended primarily for the installer who will perform the work. It assumes that decisions regarding the selection of grounding electrodes, locations, and types of equipment have been made by the RUS borrower or the engineer delegated by the RUS borrower.

(f) Only a *qualified installer* shall be assigned to make installations without advance planning and without direct

supervision. A *qualified installer* is one who has extensive installation experience, complete knowledge and understanding of RUS Bulletin 1751F–805, Electrical Protection At Customer Locations; RUS Bulletin 345–154 (RUS Form 515g), Specifications and Drawings for Service Entrance and Station Protector Installation, and applicable portions of the ANSI/NFPA 70–1996, *NEC®*, and ANSI/IEEE C2–1997, NESC. Copies of RUS Bulletins 1751F–805 and 345–154 are available upon request from RUS/USDA, 1400 Independence Avenue, SW., STOP 1522, Washington, DC 20250–1522, FAX (202) 690–2268.

(g) This section and §§ 1755.504 through 1755.509 contain information which is normally not provided on the construction drawings which are included in § 1755.510.

(h) All work shall be conducted in a careful and professional manner. Service wire and cable shall not be trampled on, run over by vehicles, pulled over or around abrasive objects or otherwise subjected to abuse.

(i) When situations not covered by this section and §§ 1755.504 through 1755.510 arise, the RUS borrower or the engineer delegated by the borrower, shall specify the installation procedure to be used. The requirements of paragraph (j) of this section shall be complied with in every installation.

(j) NIDs, BETs, and fused primary station protectors shall be installed and grounded to meet the requirements of the ANSI/NFPA 70–1996, *NEC®*, or local laws or ordinances, whichever are more stringent.

(k) Battery polarity and conductor identification shall be maintained throughout the system as indicated on construction drawings 815 and 815–1 contained in § 1755.510. Color codes and other means of conductor identification of buried and aerial service wires shall conform to the requirements of this section and §§ 1755.504 through 1755.510.

(l) All materials for which RUS makes acceptance determinations, such as service wires and cables, ground rods, ground rod clamps, etc., used in service entrance installations shall be RUS accepted or RUS technically accepted. Borrowers shall require contractors to obtain the borrower's approval before RUS technically accepted materials are to be used in service entrance installations. Borrower's shall also ensure that the cost of the RUS technically accepted materials are at least 6 percent less than the cost of equivalent RUS accepted materials, as specified in ''Buy American'' Requirement of the Rural Electrification Act of 1938, as amended. Materials used in service entrance installations which are of the type which RUS does not make acceptance determinations shall be of a suitable quality for their intended application as determined by the RUS borrower or the engineer delegated by the RUS borrower.

(m) On completion of an installation, borrowers shall require the installer to make all applicable tests required by §§ 1755.400 through 1755.407, RUS standard for acceptance tests and measurements of telecommunications plant.

§ 1755.504 Demarcation point.

(a) The demarcation point (DP) provides the physical and electrical interface between the telecommunications company's facilities and the customer's premises wiring.

(b) The FCC rules in 47 CFR part 68 require telecommunications providers to establish a ''DP'' which marks a separation of the provider's facilities from the customer's (owned) premises wiring and equipment.

(c) RUS borrowers shall observe the FCC DP requirement by installing NIDs, BETs, or fused primary station protectors when required by Section 800–30(a)(2) of the ANSI/NFPA 70–1996, *NEC®*, at all new or significantly modified customer access locations which are financed with RUS loan funds. The *National Electrical Code®* and *NEC®* are registered trademarks of the National Fire Protection Association, Inc., Quincy, MA 02269. The ANSI/NFPA 70–1996, *NEC®*, is incorporated by reference in accordance with 5 U.S.C. 552(a) and 1 CFR part 51. Copies are available from NFPA, 1 Batterymarch Park, P.O. Box 9101, Quincy, Massachusetts 02269–9101, telephone number 1 (800) 344–3555. Copies of ANSI/NFPA 70–1996, *NEC®*, are available for inspection during normal business hours at RUS, room 2845, U.S. Department of Agriculture, 1400 Independence Avenue, SW., STOP 1598, Washington, DC 20250–1598 or at the Office of the Federal Register, 800 North Capitol Street, NW., suite 700, Washington, DC.

(d) For all customer access locations of less than 12 pairs, RUS borrowers shall establish DPs by using either NIDs or fused primary station protectors when required by Section 800–30(a)(2) of the ANSI/NFPA 70–1996, *NEC®*. For customer access locations of 12 pairs or greater, RUS borrowers shall establish DPs using either NIDs, BETs, or fused primary station protectors when required by Section 800–30(a)(2) of the ANSI/NFPA 70–1996, *NEC®*.

§ 1755.505 Buried services.

(a) Buried services of two or three pairs shall consist of Service Entrance, Buried (SEB) assembly units, in accordance with RUS Bulletin 345–154 (RUS Form 515g), Specifications and Drawings for Service Entrance and Station Protector Installations. The wire used for buried services shall conform to the requirements of § 1755.860, RUS specification for filled buried wires, and shall be RUS accepted or RUS technically accepted. The conductor size for two and three pair buried service wires shall be 22 American Wire Gauge (AWG). Copies of RUS Bulletin 345–154 are available upon request from RUS/USDA, 1400 Independence Avenue, SW., STOP 1522, Washington, DC 20250–1522, FAX (202) 690–2268.

(b) Buried services of six or more pairs shall be RUS accepted or RUS technically accepted 22 AWG filled buried cable conforming to the requirements of § 1755.390, RUS specification filled telephone cables.

(c) Buried service wire or cable shall be terminated in buried plant housings using either splicing connectors or filled terminal blocks in accordance with the applicable paragraphs of § 1755.200, RUS standard for splicing copper and fiber optic cables.

(d) Buried service wire or cable shall be identified at buried plant housings in accordance with construction drawing 958 contained in § 1755.510.

(e) Buried service wire or cable shall be installed up to the building in the same general manner as buried exchange cable but in addition must meet the following requirements:

(1) Light weight lawn plows or trenchers shall be used;

(2) The shortest feasible route commensurate with the requirements of § 1755.508 (i), (j), and (k) and paragraph (f)(1) of this section shall be followed;

(3) Buried service wire or cable shall be plowed or trenched to a depth of 24 in. (610 mm) or greater where practicable in soil, 36 in. (914 mm) in ditches, or 3 in. (76 mm) in rock. Depths shall be measured from the top of the wire or cable to the surface of the ground or rock;

(4) In the case of a layer of soil over rock either the minimum depth in rock measured to the surface of the rock, or the minimum depth in soil measured to the surface of the soil may be used; and

(5) Where adequate advance planning has been done, burial of telecommunications services jointly with electric power services may be feasible. If a decision has been reached by management to provide joint occupancy services, the services may be installed using the recommendations in

RUS Bulletin 305–1, ''Joint Use of Facilities for Telephone and Electric Service.'' Copies of RUS Bulletin 305–1 are available upon request from RUS/USDA, 1400 Independence Avenue, SW., STOP 1522, Washington, DC 20250–1522, FAX (202) 690–2268.

(f) Buried service wire or cable shall be installed on or in buildings as follows:

(1) Each buried service wire or cable shall contact the building as close to the NID, BET, or fused primary station protector as practicable. Service wire or cable runs on buildings shall normally consist of a single vertical run held to the minimum practical length. Horizontal and diagonal runs shall not be permitted.

(2) Buried service wire or cable shall be located so as to avoid damage from lawn mowers, animals, gardening operations, etc.

(3) Buried service wire or cable shall be installed against a foundation wall or pillar to provide adequate support and mechanical protection.

(4) Where it is likely that the service wire or cable shall be subjected to mechanical damage, the wire or cable shall be enclosed in a guard in accordance with assembly unit drawing BM83 contained in § 1755.510.

(5) The first above-ground attachment for a buried service wire or cable, unless it is enclosed in a guard, shall not be more than 4 in. (100 mm) above final grade.

(6) Uninsulated attachment devices may be used to attach buried service wire and cable to masonry and other types of noncombustible buildings and on any type of building if fuseless primary station protectors incorporated in NIDs or BETs are used and installations fully comply with Section 800–30(a)(1) of the ANSI/NFPA 70–1996, *NEC®*. The *National Electrical Code®* and *NEC®* are registered trademarks of the National Fire Protection Association, Inc., Quincy, MA 02269. The ANSI/NFPA 70–1996, *NEC®*, is incorporated by reference in accordance with 5 U.S.C. 552(a) and 1 CFR part 51. Copies are available from NFPA, 1 Batterymarch Park, P.O. Box 9101, Quincy, Massachusetts 02269–9101, telephone number 1 (800) 344–3555. Copies of ANSI/NFPA 70–1996, *NEC®*, are available for inspection during normal business hours at RUS, room 2845, U.S. Department of Agriculture, 1400 Independence Avenue, SW., STOP 1598, Washington, DC 20250–1598 or at the Office of the Federal Register, 800 North Capitol Street, NW., suite 700, Washington, DC.

(7) Insulated attachments shall be used to separate service wires or cables from woodwork where Section 800–30(a)(2) of the ANSI/NFPA 70–1996, *NEC®*, requiring the use of fused primary station protectors must be observed.

(8) Minimum separation between buried service wire or cable and other facilities shall be as listed in Table 1, as follows:

TABLE 1.—MINIMUM SEPARATION FOR TELECOMMUNICATIONS WIRES AND CABLES ON OR IN BUILDINGS

Foreign facility or obstruction	Minimum clearance in. [mm][1 2] telecommunications company's wires or cables
Electric supply wire including neutral and grounding conductors.	
Open	4 [102]
In conduit	2 [50.8]
Radio and television antennas, lead-in and grounding conductors.	4 [102]
Lightning rods and lightning conductors.	72 [1830][3]
All foreign grounding conductors except lightning rod ground conductors.	2 [50.8]
Neon signs and associated wiring.	6 [150]
Metallic objects—pipes (gas, cold water, oil, sewer,) and structures.	2 [50.8][4]

TABLE 1.—MINIMUM SEPARATION FOR TELECOMMUNICATIONS WIRES AND CABLES ON OR IN BUILDINGS—Continued

Foreign facility or obstruction	Minimum clearance in. [mm][1 2] telecommunications company's wires or cables
Wires or cables of another communications system.	2 [50.8]

Notes: [1] If minimum separation cannot be obtained, nonshielded wire and cable facilities shall be protected with either porcelain tubes or flexible tubing as modified by Notes 3 and 4 of this table.

[2] Separation applies to crossings and parallel runs.

[3] If this separation cannot be obtained, bond the telecommunications grounding conductors or grounding electrode to the lightning rod grounding conductor or grounding electrode with at least a Number (No.) 6 AWG copper, insulated, ground wire. With this provision a minimum separation of 4 in. (100 mm) is acceptable but this provision must not be utilized if the separation cited in this table can be maintained.

[4] Increase to a minimum of 3 in. (75 mm) separation from steam or hot water pipes, heating ducts, and other heat sources.

(9) Wire and cable attachments to buildings for outside mounted NIDs, BETs, or fused primary station protectors shall be in accordance with construction drawing 962 contained in § 1755.510.

(10) Appropriate devices for attaching service wire or cable on or in buildings vary with the type of building construction and the wire or cable size. Figures 1 and 2 illustrate various types of anchoring devices and their applications. The size and type of fastening device for the wire or cable size and type of surface shall be in accordance with the manufacturer's recommendation; Figures 1 and 2 are as follows:

BILLING CODE 3410–15–P

FIGURE 1 ANCHORING DEVICES

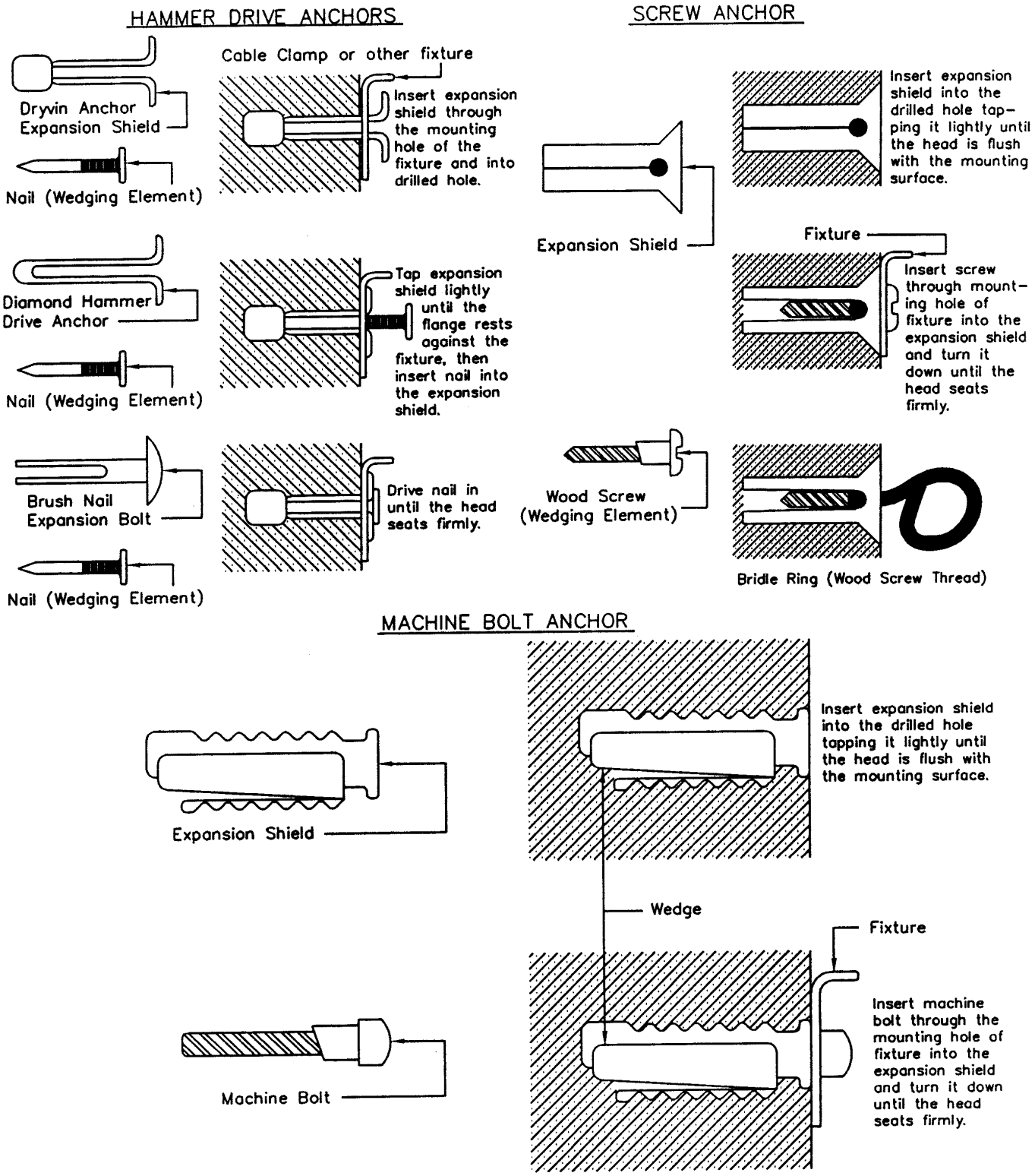

FIGURE 2 CABLE ATTACHMENT DEVICES

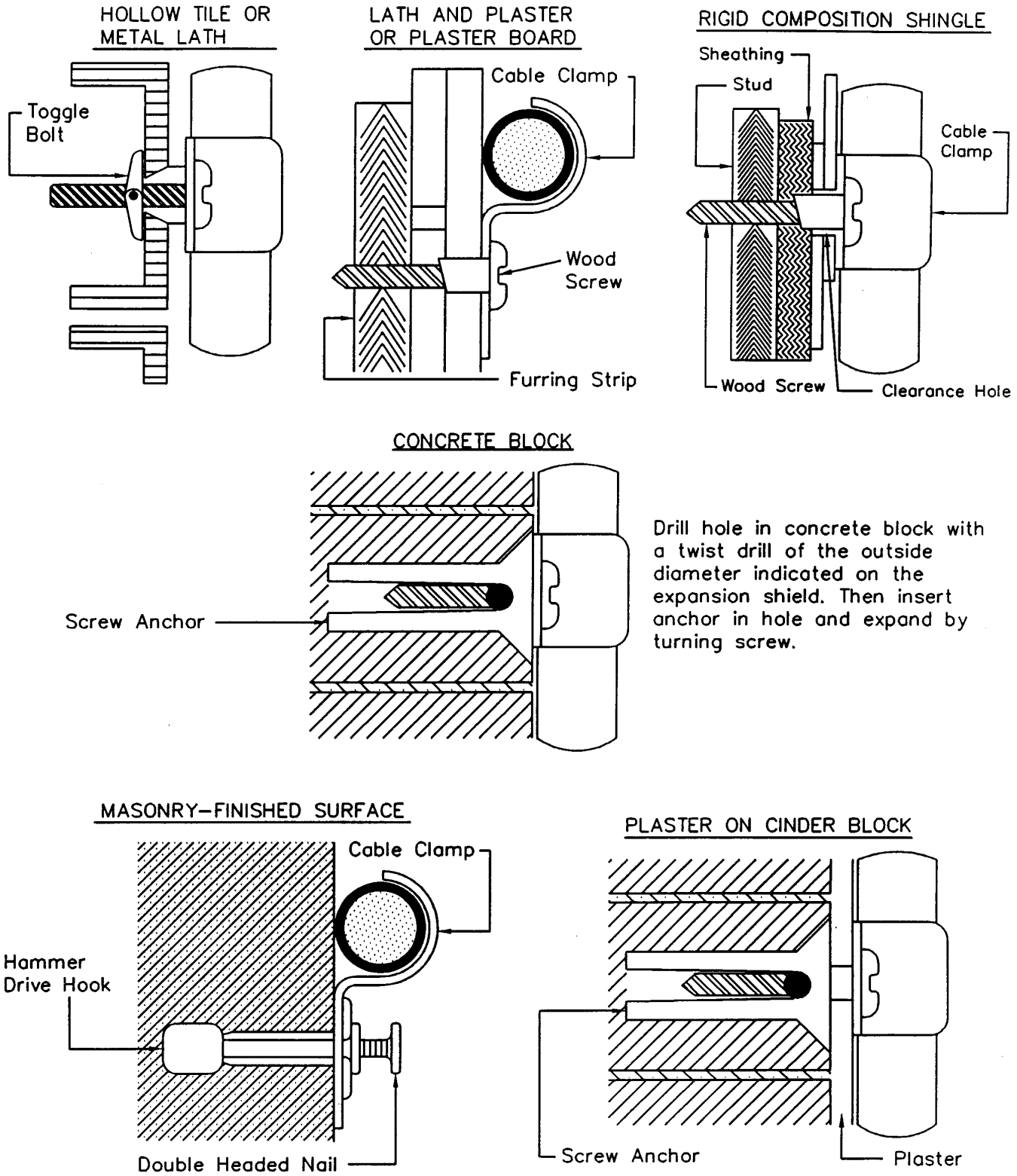

(11) Experience indicates that there are strenuous objections from many owners of buildings covered with aluminum or vinyl siding to the drilling of holes in the siding for the attachment of wires or cables, and NIDs, BETs, or fused primary station protectors. It is, therefore, important to obtain permission from the owner before drilling holes in such siding.

(12) If the NID, BET, or fused primary station protector must be mounted

inside (not recommended by RUS), the service entrance into the building shall be installed in accordance with Section 800–12(c) of the ANSI/NFPA 70–1996, *NEC®*. After pulling-in the wire or cable, the free space around the cable or wire shall be carefully sealed both outside and inside with a duct sealer that has RUS acceptance or RUS technical acceptance.

(13) If the customer requests an all buried installation for an alarm system or objects to above-ground facilities because of appearance and one-party service is involved, the entrance hole shall be made below grade as shown in sketch C of construction drawing 510–2 contained in § 1755.510. Care shall be exercised to prevent damage to the building foundation. The hole shall be sealed as specified in paragraph (f)(12) of this section. The installation shall comply with all the requirements of Section 800–12(c) of the ANSI/NFPA 70–1996, *NEC®*.

(g) When the NID, BET, or fused primary station protector is to be installed inside the building, the installation shall comply with Section 800–12(c) of the ANSI/NFPA 70–1996, *NEC®*, and the outside plant wire or cable shall preferably be installed in a rigid metal or intermediate metal conduit that is grounded to an electrode in accordance with Section 800–40(b) of the ANSI/NFPA 70–1996, *NEC®*, as shown in sketch A of Figure 3 in paragraph (h)(2) of this section. The shield of the outside plant wire or cable shall be bonded to the grounding terminal of the NID, BET, or fused primary station protector which in turn shall be connected to the *closest*, existing, and accessible grounding electrode, of the electrodes cited in Section 800–40 of the ANSI/NFPA 70–1996, *NEC®*.

(h) An inside NID, BET, or fused primary station protector installation may also be made without use of a rigid metal or intermediate metal conduit provided that the ingress of the outside plant wire or cable complies with Section 800–12(c) of the ANSI/NFPA 70–1996, *NEC®*, and provided either of the following are observed:

(1) The NID, BET, or fused primary station protector is located as close as practicable to the point where the outside plant wire or cable emerges through an exterior wall. The length of outside plant wire or cable exposed within the building shall be as short as practicable but in no case shall it be longer than 50 feet (ft) [15.2 meters (m)] in accordance with the allowable exception No. 3 of Section 800–50 of the ANSI/NFPA 70–1996, *NEC®*. See sketch B of Figure 3 in paragraph (h)(2) of this section. The shield of the outside plant wire or cable shall be bonded to the grounding terminal of the NID, BET, or fused primary station protector which in turn shall be connected to the *closest*, existing and accessible grounding electrode, of the electrodes cited in Section 800–40 of the ANSI/NFPA 70–1996, *NEC®* (Fine print Note No. 2 of ANSI/NFPA 70–1996, *NEC®*, Section 800–50, warns that the full 50 ft (15.2 m) may not be authorized for outside unlisted cable (not in a metal or intermediate metal conduit) within a building if it is practicable to place the NID, BET, or fused primary station protector closer than 50 ft (15.2 m) to the cable entrance point, e.g., if there is an acceptable and accessible grounding electrode of the type cited in Section 800–40 of the ANSI/NFPA 70–1996, *NEC®*, anywhere along the proposed routing of the outside cable within the building); or

(2) Where the NID, BET, or fused primary station protector must be located within the building remote from the entrance point and the entrance point of the outside plant wire or cable cannot be designed to be closer to the NID, BET, or fused primary station protector location, the outside plant wire or cable shall be spliced, as close as practicable to the point where the outside plant wire or cable emerges through an outside wall, to an inside wiring cable that is ''Listed'' as being suitable for the purpose in accordance with Part E of Article 800 of the ANSI/NFPA 70–1996, *NEC®*. The length of outside plant wire or cable exposed within the building shall be as short as practicable but in no case shall it be longer than 50 ft (15.2 m) in accordance with the allowable exception No. 3 of Section 800–50 of the ANSI/NFPA 70–1996, *NEC®*. See sketch C of Figure 3. The shield of the outside plant wire or cable shall be bonded to the grounding terminal of the NID, BET, or fused primary station protector which in turn shall be connected to the *closest*, existing, and accessible grounding electrode, of the electrodes cited in Section 800–40 of the ANSI/NFPA 70–1996, *NEC®* (Fine print Note No. 2 of the ANSI/NFPA 70–1996, *NEC®*, Section 800–50, warns that the full 50 ft (15.2 m) may not be authorized for outside unlisted cable (not in a metal or intermediate metal conduit) if it is practicable to place the NID, BET, or fused primary station protector closer than 50 ft (15.2 m) to the cable entrance point, e.g., if there is an acceptable and accessible grounding electrode of the type cited in Section 800–40 of the ANSI/NFPA 70–1996, *NEC®*, anywhere along the proposed routing of the outside cable within the building). Figure 3 is as follows:

BILLING CODE 3410–15–P

FIGURE 3

CABLE ENTRANCES AND RUNS IN BUILDINGS

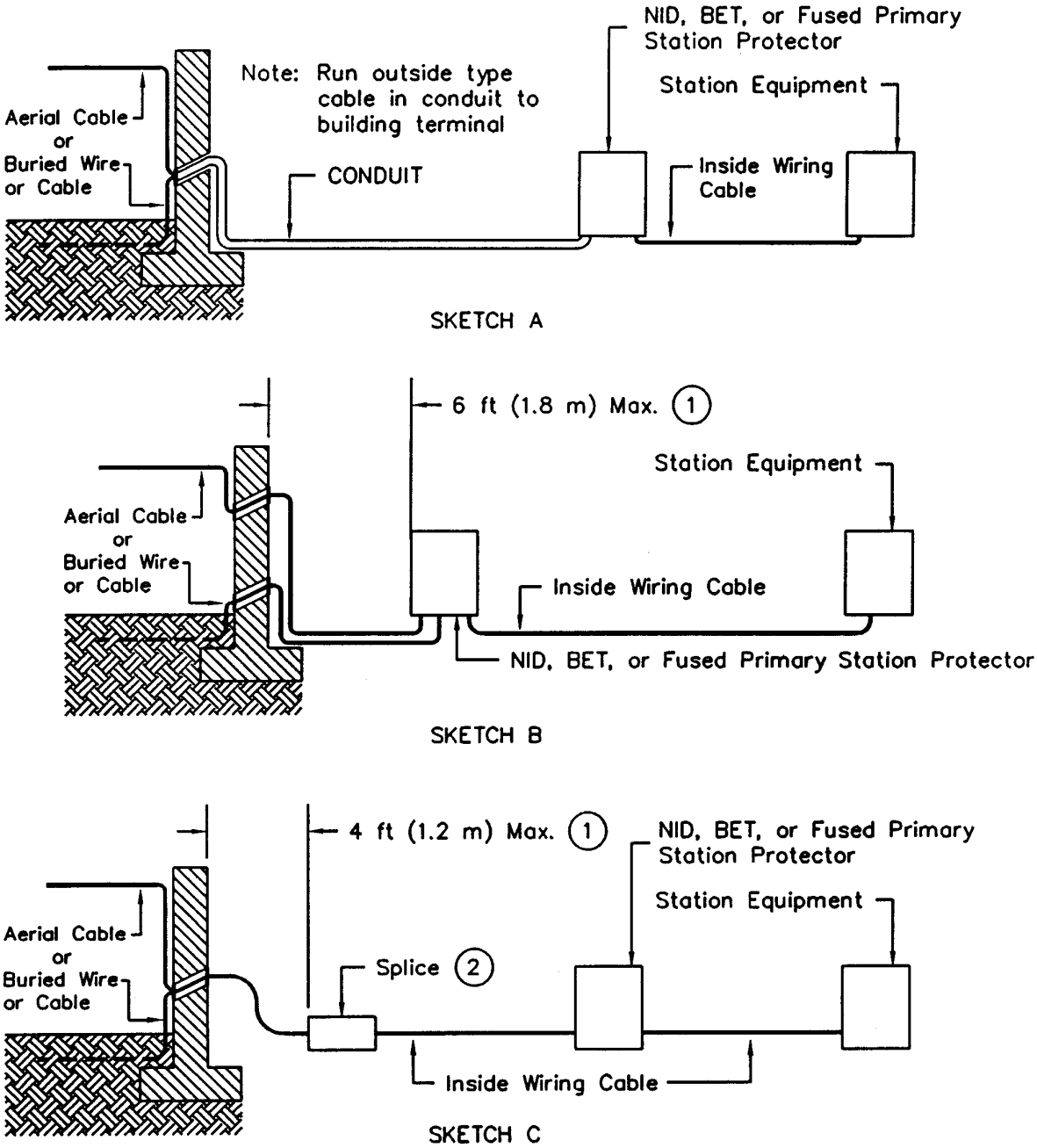

Notes:

1. Recommended maximum is shown; length cannot exceed the ANSI/NFPA 70–1996, NEC,® allowable length of 50 ft (15.2 m). (See Fine Print Note No. 2 of Section 800–50 of ANSI/NFPA 70–1996, NEC.®

2. Outside plant cable shield shall be connected to an acceptable grounding electrode. If splice case is metallic, the splice case shall also be connected to the same acceptable grounding electrode.

(i) The polarity of buried wire or cable ''tip'' and ''ring'' conductors shall be maintained by making the connections in accordance with Table 2, as follows:

TABLE 2.—COLOR CODES FOR TIP AND RING CONNECTIONS OF INSIDE WIRING CABLE

Pair	Tip		Ring	
	Color of insulation	Color of marking	Color of insulation	Color of marking
1	White	Blue	Blue	White
2	White	Orange	Orange	White
3	White	Green	Green	White
4	White	Brown	Brown	White
5	White	Slate	Slate	White
6	Red	Blue	Blue	Red
7	Red	Orange	Orange	Red
8	Red	Green	Green	Red
9	Red	Brown	Brown	Red
10	Red	Slate	Slate	Red
11	Black	Blue	Blue	Black
12	Black	Orange	Orange	Black
13	Black	Green	Green	Black
14	Black	Brown	Brown	Black
15	Black	Slate	Slate	Black
16	Yellow	Blue	Blue	Yellow
17	Yellow	Orange	Orange	Yellow
18	Yellow	Green	Green	Yellow
19	Yellow	Brown	Brown	Yellow
20	Yellow	Slate	Slate	Yellow
21	Violet	Blue	Blue	Violet
22	Violet	Orange	Orange	Violet
23	Violet	Green	Green	Violet
24	Violet	Brown	Brown	Violet
25	Violet	Slate	Slate	Violet

§ 1755.506 Aerial wire services.

(a) Aerial services of one through six pairs shall consist of Service Entrance, Aerial (SEA) assembly units, in accordance with RUS Bulletin 345–154 (RUS Form 515g), Specifications and Drawings for Service Entrance and Station Protector Installations. The wire used for aerial services shall conform to the requirements of §§ 1755.700 through 7 CFR 1755.704, RUS specification for aerial service wires, and shall be RUS accepted or RUS technically accepted. Copies of RUS Bulletin 345–154 are available upon request from RUS/USDA, 1400 Independence Avenue, SW., STOP 1522, Washington, DC 20250–1522, FAX (202) 690–2268.

(b) If aerial wire services are to be connected to aerial cable pairs, the NIDs or fused primary station protectors and grounds shall be installed and connected before the aerial service wires are attached to the customer's structure.

(c) Kinks or splices shall not be permitted in aerial service wire spans.

(d) Aerial service wires shall be run in accordance with the construction drawings contained in § 1755.510 and shall conform to all clearance requirements of the ANSI/NFPA 70–1996, *NEC®*, and ANSI/IEEE C2–1997, NESC, or local laws or ordinances, whichever are the most stringent. The *National Electrical Code®* and *NEC®* are registered trademarks of the National Fire Protection Association, Inc., Quincy, MA 02269. The ANSI/NFPA 70–1996, *NEC®*, and ANSI/IEEE C2–1997, NESC, are incorporated by reference in accordance with 5 U.S.C. 552(a) and 1 CFR part 51. Copies of ANSI/NFPA 70–1996, *NEC®*, are available from NFPA, 1 Batterymarch Park, P.O. Box 9101, Quincy, Massachusetts 02269–9101, telephone number 1 (800) 344–3555. Copies of ANSI/IEEE C2–1997, NESC, are available from IEEE Service Center, 455 Hoes Lane, Piscataway, New Jersey 08854, telephone number 1 (800) 678—4333. Copies of ANSI/NFPA 70–1996, *NEC®*, and ANSI/IEEE C2–1997, NESC, are available for inspection during normal business hours at RUS, room 2845, U.S. Department of Agriculture, 1400 Independence Avenue, SW., STOP 1598, Washington, DC 20250–1598 or at the Office of the Federal Register, 800 North Capitol Street, NW., suite 700, Washington, DC.

(e) Aerial service wire shall be installed using the maximum practicable sag consistent with the required ground clearance and good construction practices. In no event shall the minimum sags be less than the values shown on construction drawing 505 contained in § 1755.510 for various span lengths and loading areas provided. Span lengths shall not exceed 250 ft (76 m).

(f) To reduce vibration and galloping, aerial service wire shall be twisted one complete turn for each 10 ft (3 m) of span length at the time of installation.

(g) The methods of attaching aerial service wires at poles shall be as illustrated in construction drawings 503–2 and 504 contained in § 1755.510.

(h) A horizontal climbing space of 24 in. (610 mm) shall be provided on poles used jointly with power circuits that operate at 300 volts or less, provided the telecommunications conductors are positioned below the power conductors; however, if the telecommunications conductors are installed above power conductors that operate at 300 volts or less (a practice which is highly discouraged and not practicable), a horizontal climbing space of 30 in. (762 mm) shall be provided as indicated on construction drawing 702 contained in § 1755.510. A climbing space of 30 in. (762 mm) shall be provided on poles used jointly with power circuits that operate at voltages greater than 300 volts but less than 15 kilovolts (kV) as indicated on construction drawing 702 contained in § 1755.510. On jointly used poles with power conductors operating at voltages greater than 15 kV, climbing space shall be provided in conformance

with the requirements of Rule 236 of the ANSI/IEEE C2–1997, NESC. Climbing space shall be projected vertically 40 in. (1.02 m) above and below the bounding telecommunications conductors on jointly used poles with power conductors unless the telecommunications conductors are installed above the power conductors (a practice which is highly discouraged and not practicable) and the power conductors operate at voltages greater than 8.7 kV line-to-ground or 15 kV line-to-line, in which case the projected vertical space shall be increased to 60 in. (1.5 m).

(i) Not more than four aerial service wires shall be distributed from any one in 7/16 in. (10 mm) drive hook, or more than two aerial service wires from any one 5/16 in. (8 mm) drive hook. Aerial service wires and drive hooks shall be arranged so that the load does not pull the drive hook out of the pole. When more than one drive hook is required, the drive hooks shall be staggered with a minimum separation of 1 in. (25.4 mm) horizontally on centers and 1.5 in. (40 mm) vertically on centers. If drive hooks are placed within 3 in. (76 mm) of the top of the pole and on the opposite side of the pole's circumference, a vertical separation of at least 3 in. (76 mm) shall be provided. A drive hook shall not be placed on the top of a pole or stub pole.

(j) When connecting aerial service wires to cable pairs at terminals, sufficient slack shall be provided so that each aerial service wire shall reach any binding post position as shown on construction drawing 312–1 contained in § 1755.510.

(k) Aerial service wire attachments on utility poles and the manner of placing bridle rings and entering cable terminals shall be as shown on construction drawing 503–2 contained in § 1755.510.

(l) Not more than two conductors shall be connected to any terminal binding post. Where it is necessary to bridge more than two aerial service wires at the same closure, the aerial service wires shall be terminated in aerial service wire terminals connected in parallel with a No. 20 AWG bridle wire which shall be terminated on the binding posts of the filled terminal block.

(m) Where aerial service wire is attached to aerial plastic cable, it shall be brought directly into a ready-access closure and shall be terminated on the binding posts of the filled terminal block as shown on construction drawing 503–2 contained in § 1755.510.

(n) The conductor of copper coated steel reinforced aerial service wires identified by tracer ridges shall be used as the ring (negative battery) conductor of the pair, and shall normally be connected to the right or lower binding post of a pair on filled terminal blocks and NIDs or fused primary station protectors.

(o)(1) The tip and ring conductors of nonmetallic reinforced aerial service wires shall be identified in accordance with Table 3, as follows:

TABLE 3.—NONMETALLIC REINFORCED AERIAL SERVICE WIRE COLOR CODE

Pair No	Conductor color	
	Tip	Ring
1	White/Blue or White	Blue.
2	White/Orange or White	Orange.
3	White/Green or White	Green.
4	White/Brown or White	Brown.
5	White/Slate or White	Slate.
6	Red/Blue or Red	Blue.

(2) The ring (negative battery) conductor of the pair shall normally be connected to the right or lower binding post of a pair on filled terminal blocks and NIDs or fused primary station protectors.

(p) When it is necessary to avoid intervening obstacles between a pole and a building, span clamp attachments shall be used to support the aerial service wires at points between the poles that are supporting the cable on the suspension strand as indicated by construction drawings 501–1 and 501–2 contained in § 1755.510.

(q) Aerial service wire strung from pole to pole shall be placed entirely below or entirely above any existing wire or cable. When adequate ground clearance can be obtained, preference shall be given to placing aerial service wire below wire and cable.

(r) When more than one aerial service wire is installed from pole to pole, the first aerial service wire shall be sagged in accordance with construction drawing 505 contained in § 1755.510. Succeeding aerial service wires shall be sagged with 2 in. (50.8 mm) more sag for each aerial service wire.

(s) Aerial service wire spans from pole lines to buildings shall follow the shortest feasible route commensurate with the requirements of paragraph (t) of this section and shall be sagged in accordance with construction drawing 505 contained in § 1755.510. The route shall avoid trees and other obstructions to the extent practicable. Where trees cannot be avoided, tree trimming permission shall be obtained from the owner or the owner's representative, and all limbs and foliage within 2 ft (600 mm) of the finally sagged wire shall be removed. If tree trimming permission cannot be obtained, the matter shall be referred to the borrower for resolution before proceeding with the installation.

(t) Aerial service wires shall contact buildings as closely as practicable at a point directly above the NID, or fused primary station protector. Generally, horizontal drop wire runs on buildings shall not exceed 20 ft (6 m). The warning given in § 1755.505(f)(11) regarding drilling holes in aluminum and vinyl siding applies also to attaching aerial service wires.

(u) The point of the first building attachment shall be located so that the aerial service wire will be clear of roof drainage points.

(v) Where practicable, aerial service wires shall pass under electrical guys, power distribution secondaries and services, tree limbs, etc.

(w) Aerial service wire shall not pass in front of windows or immediately above doors.

(x) Aerial service wires shall be routed so as to have a minimum clearance of 2 ft (600 mm) from any part of a short wave, ham radio, etc. antenna mast and a television antenna mast in its normal vertical position and of the possible region through which it sweeps when being lowered to a horizontal position.

(y) Aerial service wires shall be installed such that all clearances and separations comply with either Section 237 of the ANSI/IEEE C2–1997, NESC, or ANSI/NFPA 70–1996, *NEC*®, or local

laws or ordinances, whichever is the most stringent.

(z) Aerial service wire attachments to buildings shall be as follows:

(1) First attachments on buildings shall be made in accordance with construction drawings 506, 507, or 508–1 contained in § 1755.510, as applicable;

(2) Intermediate attachments on buildings shall be made in accordance with construction drawings 510 or 510–1 contained in § 1755.510; and

(3) Uninsulated attachments shall be permitted to be used as follows:

(i) Wherever NIDS are used as permitted by Section 800–30(a)(1) of the ANSI/NFPA 70–1996, *NEC*®; and

(ii) On masonry and other types of nonflammable buildings.

(aa) Insulated attachments shall be used on wooden frame, metallic siding and other types of combustible buildings where fused primary station protectors are used, as required by Section 800–30(a)(2) of the ANSI/NFPA 70–1996, *NEC*®.

(bb) Aerial service wire runs on buildings shall be attached vertically and/or horizontally in a neat and most inconspicuous possible manner. See construction drawing 513 contained in § 1755.510. Horizontal runs on buildings are undesirable and shall be kept to a minimum. Diagonal runs shall not be made.

(cc) Aerial service wire runs on buildings shall be located so as not to be subjected to damage from passing vehicles, pedestrians, or livestock.

(dd) Minimum separation between aerial service wires and other facilities on or in buildings shall be in accordance with § 1755.505(f)(8), Table 1.

(ee) Appropriate devices for attaching aerial service wires to buildings vary with the type of building construction and with the type of customer access location equipment. Table 4 lists various types of attachments and their application with respect to construction, customer access location equipment, and proper mounting devices. Construction drawings 506 through 513 contained in § 1755.510 illustrate requirements with respect to various angles of service wire contacts and uses of various attachments. Table 4 is as follows:

BILLING CODE 3410–15–P

Table 4

DEVICES FOR ATTACHING AERIAL SERVICE WIRES TO BUILDINGS (1), (2), (8)

TYPE OF ATTACHMENT		TYPES OF FASTENING DEVICES											
		FRAME BUILDINGS (3)								FIRE RESISTANT BUILDINGS (4)			
		FUSED STATION PROTECTOR				NID				(NID OR FUSED STATION PROTECTOR)			
		Wood Shingle–Composition (5)	Plywood–Plastic–Board Paneling	Thin Brick–Stucco–Plaster	Metal Sheath	Wood Shingle–Composition (5)	Plywood–Plastic–Board Paneling	Thin Brick–Stucco–Plaster	Metal Sheath	Concrete Block	Tile	Brick Stone Concrete	Steel
Knob, S	Under 30° Angle	2–1/2" x #18 FH Screw	3" x #18 FH Screw	3" x #18 FH Screw	2–1/2" x #18 FH Screw	2–1/2" x #18 FH Screw	3" x #18 FH Screw	3" x #18 FH Screw	2–1/2" x #18 FH Screw				
	Over 30° Angle	5/16" Angle Screw	5/16" Angle Screw	3/8" Angle Screw	5/16" Angle Screw	5/16" Angle Screw	5/16" Angle Screw	3/8" Angle Screw	5/16" Angle Screw				
Knob, C		2–1/2" x #10 RH Screw	3" x #10 RH Screw	3–1/2" x #10 RH Screw	2–1/2" x #10 RH Screw	Note 6	Note 6	Note 6	Note 6				
Bracket, House		2" x #14 RH Screw	2" x #14 RH Screw	2–1/2" x #14 RH Screw	2" x #14 RH Screw	Note 6	Note 6	Note 6	Note 6				
Bracket, Corner		2" x #14 RH Screw	2" x #14 RH Screw	2–1/2" x #14 RH Screw	2" x #14 RH Screw	2" x #14 RH Screw	2" x #14 RH Screw	2–1/2" x #14 RH Screw	2" x #14 RH Screw	3/16" x 4" Toggle	3/16" x 4" Toggle	2" x #14 RH Screw	3/16" x 4" Toggle
Screweye, Insulated		1" Shank	1" Shank	2" Shank	1" Shank	Note 6	Note 6	Note 6	Note 6				
Ring, Bridle, Drive		Note 6	Note 6	Note 6	Note 6	Note 7	Note 7	Note 6	Note 7	Drive Anchor	Note 6	Drive Anchor	Note 6
Ring, Bridle, Screw		Note 6	Note 6	Note 6	Note 6	Note 7	Note 7	Note 6	Note 7	Expansion Anchor	Note 6	Expansion Anchor	Note 6
Hook, Drop Wire		Note 6	Note 6	Note 6	Note 6	2" x #14 RH Screw	2" x #14 RH Screw	2" x #14 RH Screw	2" x #14 RH Screw	1/4" x 4" Toggle	1/4" x 4" Toggle	2" x #18 RH Screw	1/4" x 3" Toggle
Hook, House		Note 6	Note 6	Note 6	Note 6	2" x #14 RH Screw	2" x #14 RH Screw	2" x #14 RH Screw	2" x #14 RH Screw	Expansion Anchor	Note 6	Expansion Anchor	Note 6
Ring, Bridle, Toggle										3/16" x 4" Toggle	3/16" x 4" Toggle	Note 6	3/16" x 4" Toggle
Clamp, One Hole, Offset or closed "U" Cable Strap		Note 6	Note 6	Note 6	Note 6	3/4" x #6 RH Screw	3/4" x #6 RH Screw	3/4" x #6 RH Screw	3/4" x #6 RH Screw	1" x #6 RH Screw	1/8" x 4" Toggle	1" x #6 RH Screw	1/2" x #6 SM Screw

Notes: [1] Screw dimensions are minimum. Where appropriate, either or both dimensions shall be increased. All wood screws for exterior use shall be stainless steel. All other exterior metal devices shall be stainless steel, zinc coated steel, silicon bronze, or corrosion resistant aluminum alloy.

[2] Toggle bolt dimensions are minimum. Where appropriate, either or both dimensions shall be increased.

[3] All devices should be attached to studding.

[4] Screw-type devices shall be secured by means of expansion-type anchors. Equivalent manual or machine-driven devices may be used. Where toggle bolts are specified equivalent devices may be used.

[5] Pilot holes shall be provided for screws and bridle rings in shingles and dropsiding.

[6] Attachment device not applicable.

[7] Attachment device applicable but no separate fastening device required.

[8] To convert English units to Metric units use 1 in. = 25.4 mm.

(ff) Fastener spacings for vertical and horizontal runs on frame or masonry buildings shall not be more than 6 ft (2 m) apart. Fasteners should be spaced close enough to prevent the aerial service wire from ''slapping'' against the building during windy conditions.

(gg) When it is necessary to pass behind or around obstructions such as downspouts and vertical conduits, the aerial service wire shall be supported firmly with attachment devices placed not more than 6 in. (152 mm) from the obstruction as illustrated in Figures 4 and 5 of paragraph (hh) of this section. Preferably, the aerial service wire should be routed behind obstructions to minimize the possibility of mechanical damage to the aerial service wire in the event repair work to the obstruction is required.

(hh) When passing around building projections of masonry or wood or around corners, aerial service wires shall be installed as illustrated in Figures 5 and 6. Figures 4, 5, and 6 are as follows:

BILLING CODE 3410–15–P

FIGURE 4

AERIAL SERVICE WIRE CROSSING OBSTRUCTIONS WOODEN BUILDING SURFACES

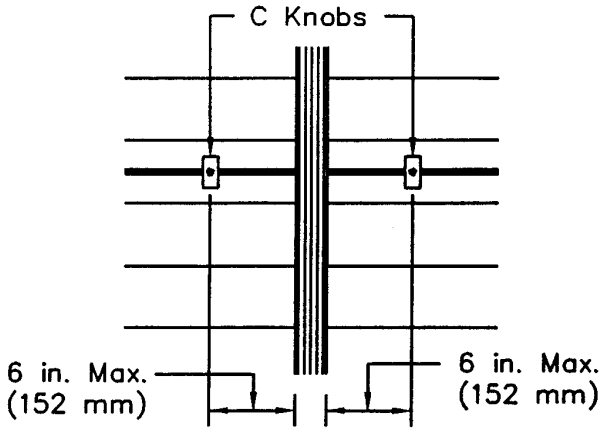

SKETCH A: PASSING BEHIND DRAIN SPOUT
(PREFERRED INSTALLATION METHOD)

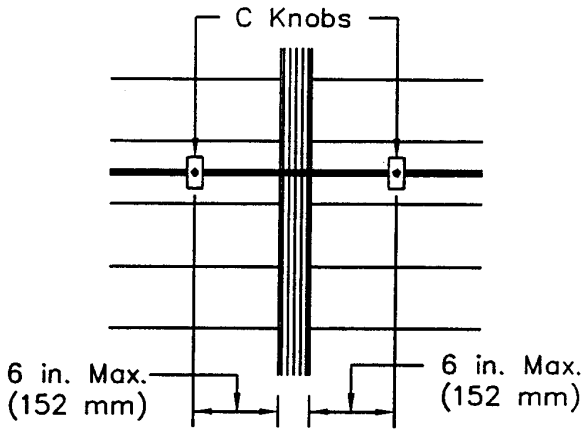

SKETCH B: PASSING IN FRONT OF DRAIN SPOUT

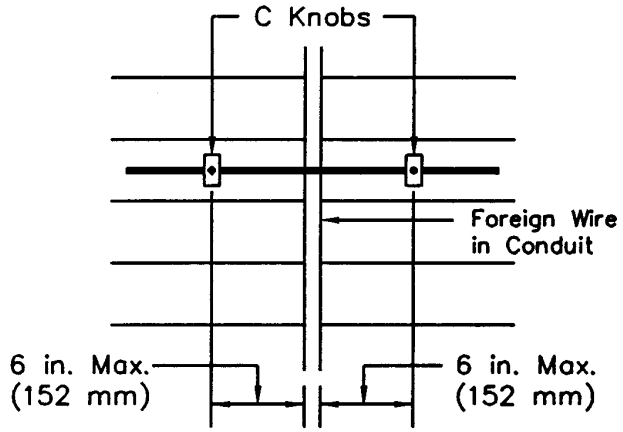

SKETCH C: CROSSING IN FRONT OF CONDUIT

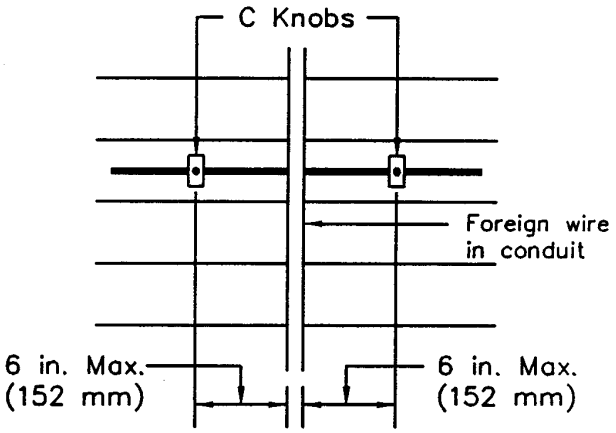

SKETCH D: CROSSING BEHIND CONDUIT
(PREFERRED INSTALLATION METHOD)

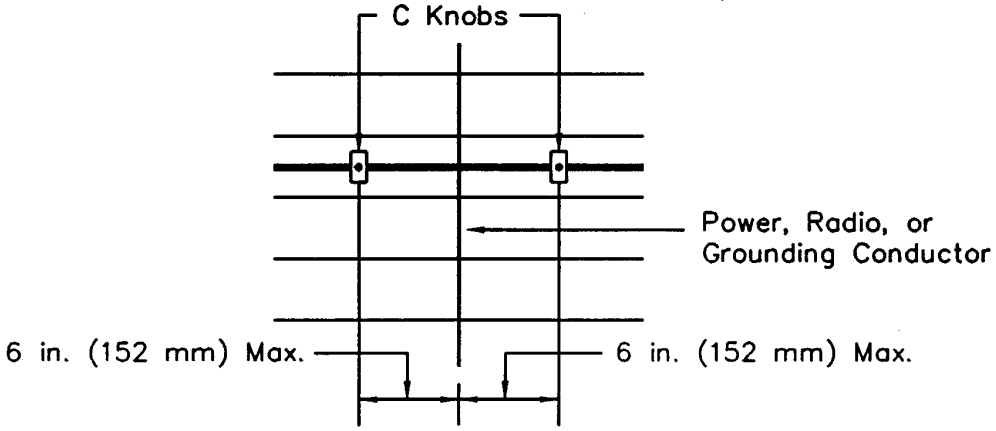

SKETCH E: PASSING POWER, RADIO, OR GROUNDING CONDUCTOR

FIGURE 5

AERIAL SERVICE WIRE CROSSING OBSTRUCTIONS MASONRY BUILDING SURFACES

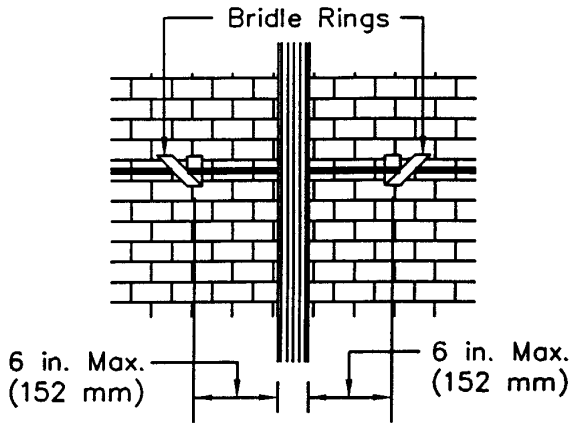

SKETCH A: PASSING BEHIND DRAIN SPOUT
(PREFERRED INSTALLATION METHOD)

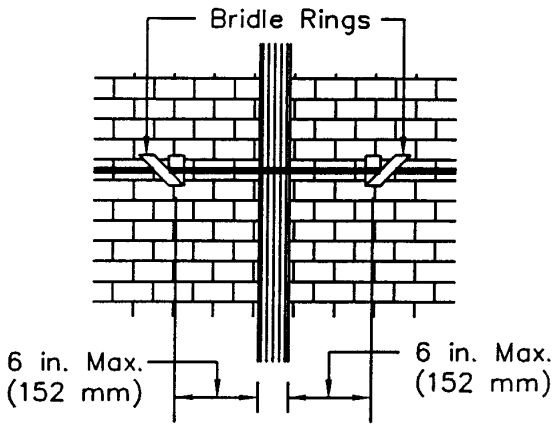

SKETCH B: PASSING IN FRONT OF DRAIN SPOUT

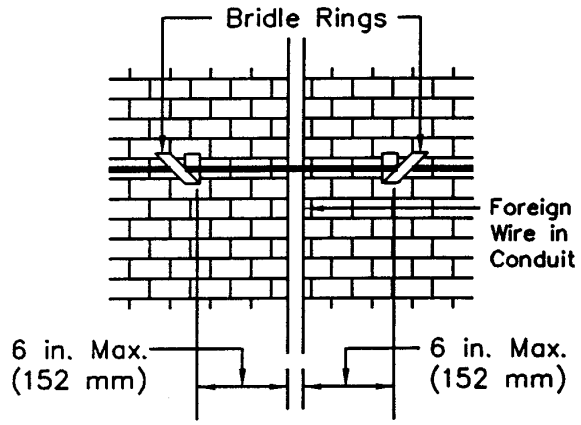

SKETCH C: CROSSING IN FRONT OF CONDUIT

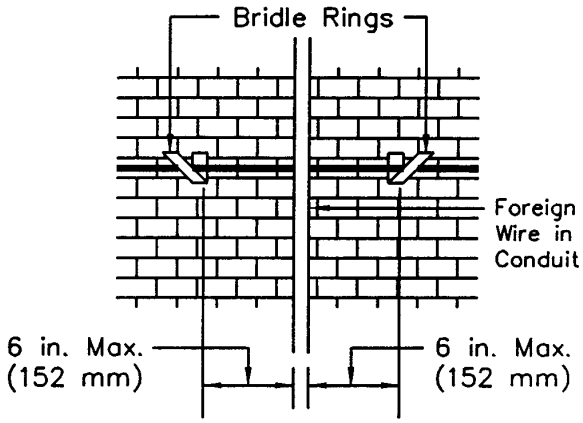

SKETCH D: CROSSING BEHIND CONDUIT
(PREFERRED INSTALLATION METHOD)

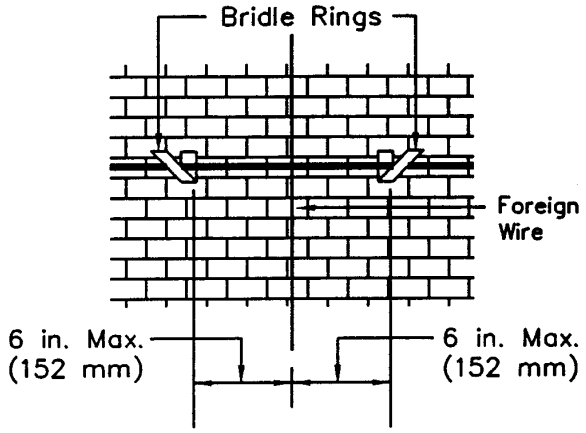

SKETCH E: PASSING BEHIND FOREIGN WIRE
(PREFERRED INSTALLATION METHOD)

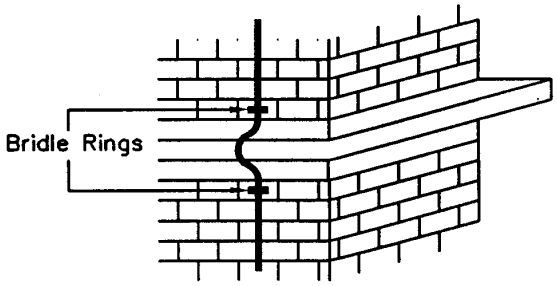

SKETCH F: MASONRY BUILDING PROJECTIONS

FIGURE 6

AERIAL SERVICE WIRE CROSSING COMBUSTILE BUILDING PROJECTIONS

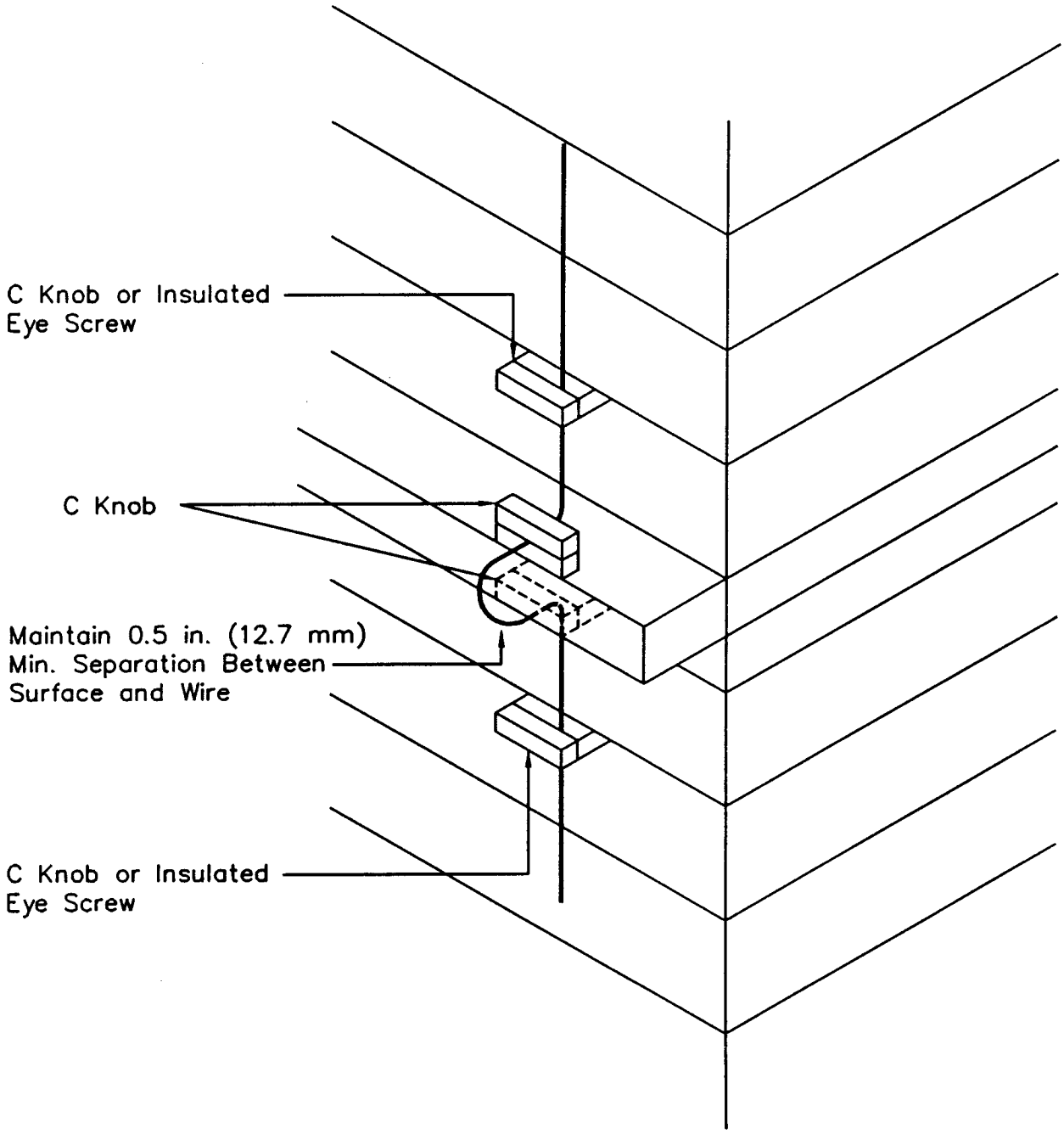

BILLING CODE 3410–15–C

(ii) In areas where ice and snow conditions are severe, aerial service wires shall be located so that ice and snow falling from the roof will not strike the wires. However, where aerial service wires must pass under the sloping part of the roof, first attachments shall be made as close as practicable to the eaves.

(jj) If two aerial service wire spans are required to the same building, the first attachment shall be such that both aerial service wires can be attached at the same attachment device. Refer to construction drawing 508–1 contained in § 1755.510. Where more than two aerial service wires are required, additional attachment devices in the same general location on the building shall be used.

(kk) When two or more aerial service wire runs are required on the same building they shall share the same type of attachment devices.

(ll) Aerial service wire entrances to buildings shall conform to sketch B of construction drawing 510–2 contained in § 1755.510, unless the entrance is made through a conduit.

(mm) When the aerial service wire approaches the entrance hole from above, a 1.5 in. (40 mm) minimum drip loop shall be formed in accordance with sketch B of construction drawing 510–2 contained in § 1755.510.

(nn) If an entrance conduit which slopes upward from outside to inside is available and suitably located, it shall be used for the aerial service wire entrance.

§ 1755.507 Aerial cable services.

(a) Where more than six pairs are needed initially, and where an aerial service is necessary, the service shall consist of 22 AWG filled aerial cable of a pair size adequate for the ultimate anticipated service needs of the building. The cable shall comply with the requirements of § 1755.390, RUS Specification for Filled Telephone Cables, and shall be RUS accepted or RUS technically accepted.

(b) Aerial cable services shall be constructed in accordance with specific installation specifications prepared by the RUS borrower or the engineer delegated by the borrower.

(c) Unless otherwise specified in the installation specifications, aerial cable service installations shall meet the following requirements:

(1) Strand supported lashed construction shall be used.

(2) Where practicable a 5/16 in. (8 mm) utility grade strand and automatic clamps shall be used in slack spans to avoid damage to the building.

(3) Construction on poles shall comply with applicable construction drawings for regular line construction. Aerial service cable shall be spliced to the main cable in accordance with § 1755.200, RUS standard for splicing copper and fiber optic cables.

(4) Where practicable, aerial cable shall pass under electrical guys, distribution secondaries, and services.

(5) The suspension strand shall be attached to the building by wall brackets as indicated in Figure 7 as follows:

BILLING CODE 3410–15–P

FIGURE 7

SUSPENSION STRAND DEADENDING ON BUILDINGS

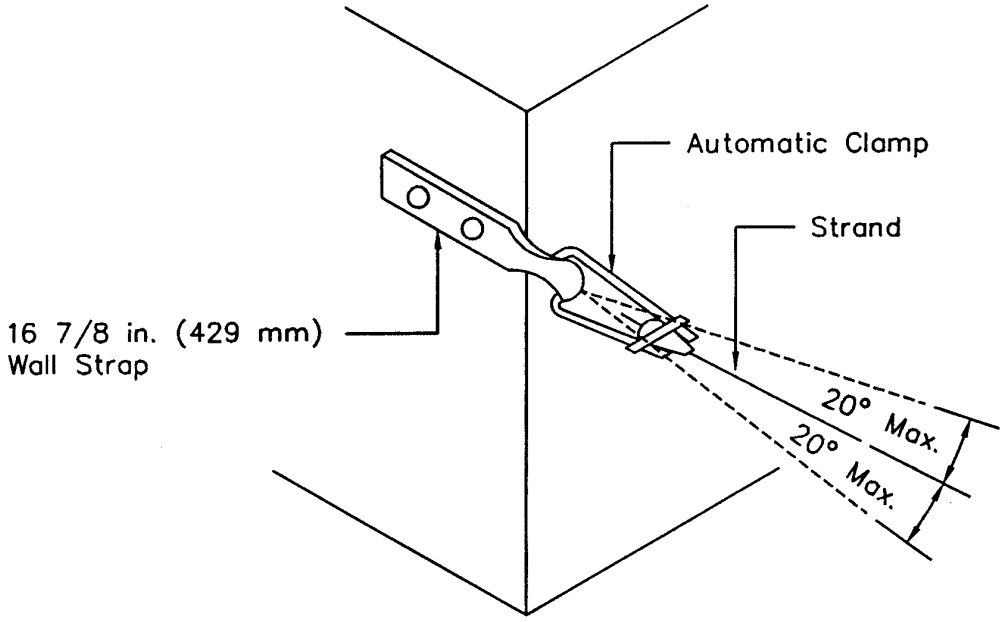

SKETCH A: PULL ALONG LINE OF BUILDING WALL

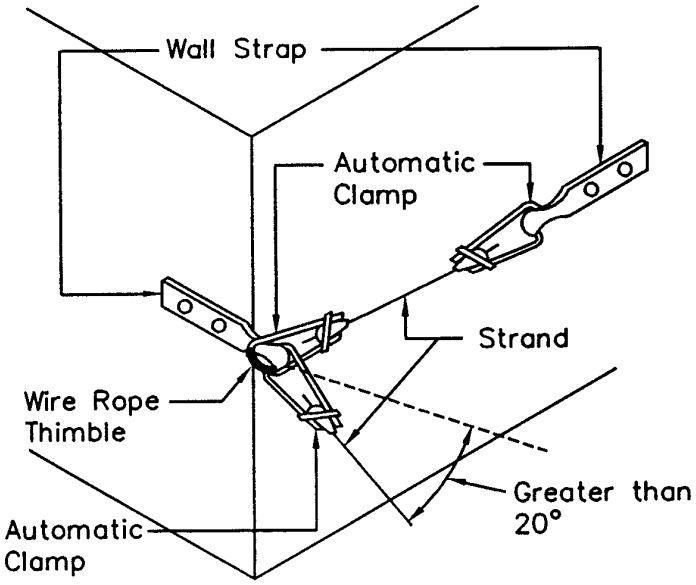

SKETCH B: ANGLE PULL FROM BUILDING WALL

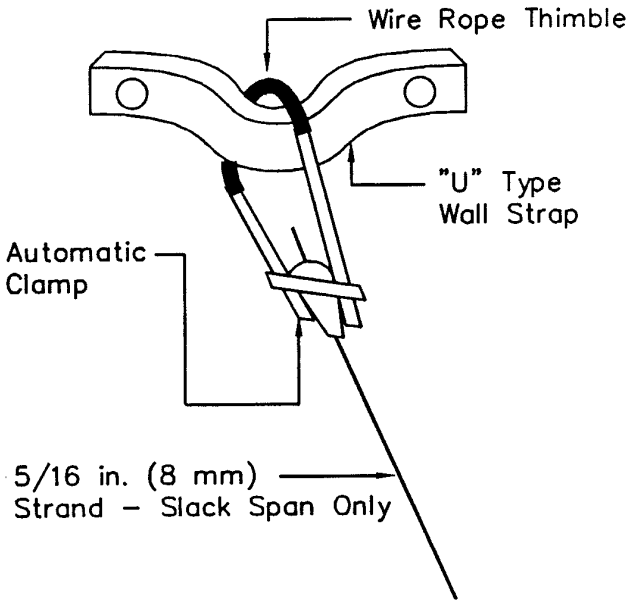

SKETCH C: PULL FROM FACE OF WALL

BILLING CODE 3410–15–C

(i) If taut spans are necessary, appropriate size strand may be used if the pull is in line with one wall of the building, or within 20 degrees of being in line as illustrated in sketch A of Figure 7. If the angle of pull is greater than 20 degrees from the building, the wall bracket shall be reinforced against pullout by an arrangement equivalent to sketch B of Figure 7. Taut spans may be strung using the recommendations in RUS Bulletin 1751F–630, Design of Aerial Plant. The same tension as would be used in normal line construction so as not to exceed 60 percent of the breaking strength of the strand under maximum loading shall be used. Taut spans shall not exceed 100 ft (30.5 m) in length and the cable weight shall not exceed 1 pound/foot (lb/ft) [1.5 kilogram/meter (kg/m)] except when equivalent combinations of greater span lengths with cable weight less than 1 lb/ft (1.5 kg/m) are permissible. Copies of RUS Bulletin 1751F–630 are available upon request from RUS/USDA, 1400 Independence Avenue, SW., STOP 1522, Washington, DC 20250–1522, FAX (202) 690–2268.

(ii) When an attachment must be made to the face of a building wall away from a corner, a ''U'' type wall bracket shall be used as indicated in sketch C of Figure 7 of this paragraph (c)(5). Only slack span construction with 5/16 in. (8 mm) utility grade strand shall be permitted in this situation. The bail of the automatic clamp shall be protected by a wire rope thimble.

(6) Aerial cable shall be located on the rear or side of the building and shall be run only in a horizontal or a vertical direction. The cable route shall be selected so as to avoid building projections and obstructions to the extent practicable.

(7) Cable attachment devices shall be located in solid masonry or in studs of wood frame buildings. Sheet surface materials may be used only where they are reinforced by substantial backing material which the attachment services can penetrate.

(8) The minimum separation on or in buildings between cable and other facilities shall be as indicated in § 1755.505(f)(8), Table 1.

(9) On horizontal runs, place cable clamps so that the attachment shall be made below the cable. On vertical runs place the cable clamps so that the attachment shall be made on the same side as horizontal runs. Cable clamps shall be placed on the inside of cable bends.

(10) On horizontal runs, cable clamps shall be placed not more than 16 in. (400 mm) apart for cable diameters equal to or greater than 1 in. (25.4 mm) and 24 in. (600 mm) apart for cable diameters less than 1 in. (25.4 mm).

(11) On vertical runs, cable clamps shall be approximately 24 in. (600 mm) apart for all sizes of cable.

(12) For the cable entrance, holes shall be bored slightly larger in diameter than the cable and shall slope upward from outside to inside. A duct sealer having RUS acceptance or RUS technical acceptance shall be applied to both ends of the hole after the cable is pulled in.

(13) Section 1755.505 (g) and (h) shall also apply to aerial cable services.

§ 1755.508 Customer access location protection.

(a) All customer access locations shall be protected.

(b) Customer access location protection shall consist of installing the telecommunications facilities with proper clearances and insulation from other facilities, providing primary voltage limiting protection, fuse links, NIDs, BETs, or fused primary station protectors, if required, and adequate bonding and grounding.

(c) All NIDs shall be RUS accepted or RUS technically accepted or the RUS borrower shall obtain RUS regional office approval on a case by case basis as applicable.

(d) All BETs shall be RUS accepted or RUS technically accepted.

(e) All fused primary station protectors shall be RUS accepted or RUS technically accepted.

(f) NIDs, BETs, or fused primary station protectors shall be mounted outside for all applications except for those described in paragraphs (g) introductory text through (g)(3) of this section.

(g) NIDs, BETs, or fused primary station protectors may be mounted inside when:

(1) Large buildings are to be served and the customer requests an inside installation;

(2) Buried alarm circuits are requested by the subscriber; or

(3) The customer requests an all buried installation for appearance or to prevent the drilling of holes in aluminum or vinyl siding.

(h) Outside mounted NIDs, BETs, or fused primary station protectors shall be easily accessible and shall be located between 3 to 5 ft (1 to 1.5 m) above final grade.

(i) The locations of NIDs, BETs, or fused primary station protectors shall be selected with emphasis on utilizing the shortest primary station protector grounding conductor practicable and on grounding of the telecommunications primary station protector to the electric service grounding system established at the building served utilizing electrodes (3) through (7) cited in Section 800–40(b)(1) of the ANSI/NFPA 70–1996, *NEC®*. *The National Electrical Code®* and *NEC®* are registered trademarks of the National Fire Protection Association, Inc., Quincy, MA 02269. The ANSI/NFPA 70–1996, *NEC®*, is incorporated by reference in accordance with 5 U.S.C. 552(a) and 1 CFR part 51. Copies are available from NFPA, 1 Batterymarch Park, P.O. Box 9101, Quincy, Massachusetts 02269–9101, telephone number 1 (800) 344–3555. Copies of ANSI/NFPA 70–1996, *NEC®*, are available for inspection during normal business hours at RUS, room 2845, U.S. Department of Agriculture, 1400 Independence Avenue, SW., STOP 1598, Washington, DC 20250–1598 or at the Office of the Federal Register, 800 North Capitol Street, NW., suite 700, Washington, DC.

(j) If access to the building electric service grounding system, as referenced in paragraph (i) of this section, is not possible or is not reasonable [telecommunications primary station protector grounding conductor will be longer than 10 ft (3 m)], the NID, BET, or fused primary station protector shall be located as close as practicable to electrodes (1) or (2) cited in Section 800–40(b)(1) of the ANSI/NFPA 70–1996, *NEC®*.

(k) In addition, the NID, BET, or fused primary station protector shall be located in, on, or immediately adjacent to the structure or building to be served as close as practicable to the point at which the telecommunications service wire attaches to the building, making sure that the telecommunications primary station protector grounding conductor is connected to the *closest*, existing, and accessible electrode, of the electrodes cited in paragraphs (i) or (j) of this section.

(l) For the preferred customer access location installation, the ANSI/NFPA 70–1996, *NEC®*, permits the telecommunications grounding conductor to be connected to the metallic conduit, service equipment closure, or electric grounding conductor as shown in Figure 8 of paragraph (l)(2) of this section.

(1) Connections to metallic conduits shall be made by ground straps clamped over a portion of the conduit that has been cleaned by sanding down to bare metal.

(2) Connections to metallic service equipment closures shall be made by attaching a connector which is listed for the purpose by some organization acceptable to the local authority (State, county, etc.) per Article 100 of the

ANSI/NFPA 70–1996, *NEC*®, definition for ''Listed'' [for example connectors listed for the purpose by Underwriters Laboratories (UL)]. Figure 8 is as follows:

BILLING CODE 3410–15–P

FIGURE 8

GROUNDING OF TELECOMMUNICATIONS SERVICE TO ELECTRIC SERVICE (PREFERRED METHOD)

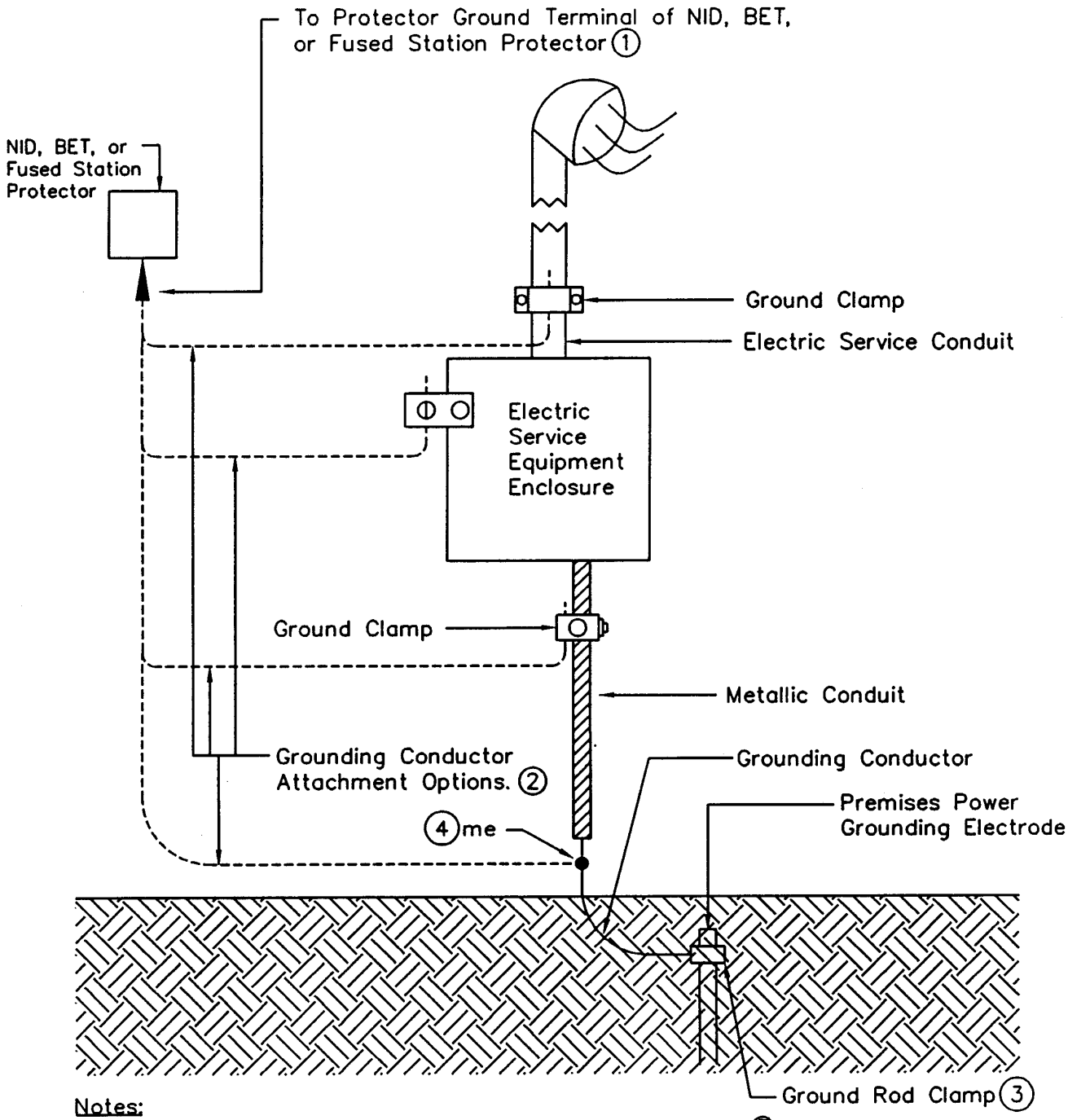

Notes:

(1.) See Section 800–40(a) of ANSI/NFPA 70–1996 NEC® (2.) Select one of the attachment options shown above for the installation. (3.) Clamp must be accepted by Listing Agency (UL, etc.). (4.) "me" connector must be accepted by a Nationally recognized testing laboratory.

BILLING CODE 3410–15–C

(m) Where it is not possible to accomplish the objective of paragraphs (i), (j), and (k) of this section, interior metallic pipes may be used to the maximum practicable extent to gain access to the electric service ground as shown in Figure 9. Note that the water pipe in Figure 9 is electrically continuous between electric and telecommunications bonds to the cold water pipe and it is used only as a portion of a bonding conductor and, therefore, does not have to be ''acceptable'' as a ground electrode but may be floating (isolated from ground by a plastic pipe section). ANSI/NFPA 70–1996, NEC®, requires that metal piping be used as a bonding conductor in this manner only when the connectors to the pipe are within 1.5 m (5 ft) of where the pipe enters the premises. This is not the preferred installation. The RUS preferred installation has the telecommunications primary station protector grounded directly to an accessible location near the power grounding system. See paragraph (l) of this section. Figure 9 is as follows:

BILLING CODE 3410–15–P

FIGURE 9

ALTERNATIVE TECHNIQUE FOR BONDING TO ELECTRIC SERVICE GROUND WHERE DIRECT ATTACHMENT IS NOT POSSIBLE

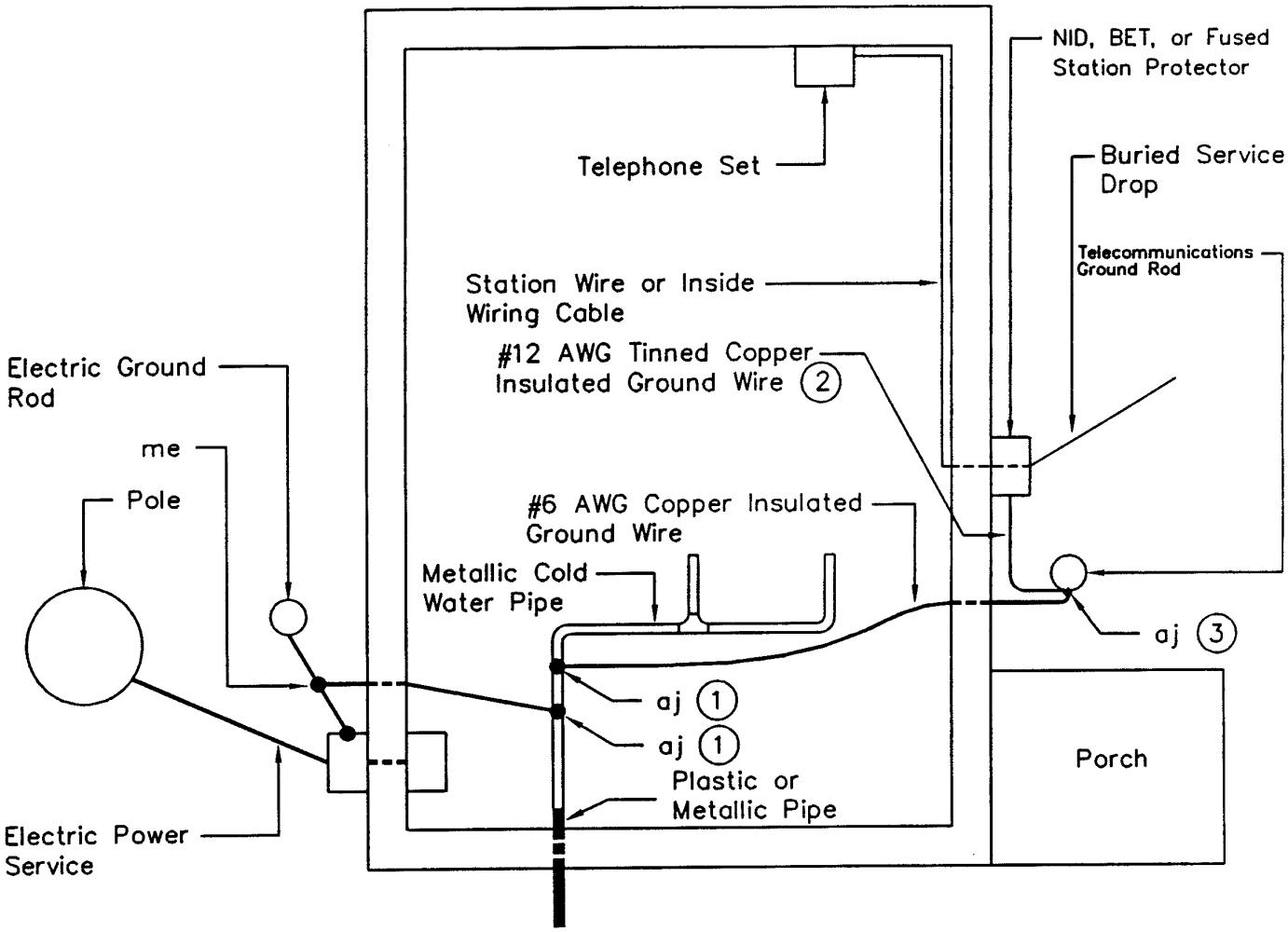

Notes:

(1.) Both electric and telephone "aj" connectors attached to the cold water pipe shall be within 5 ft (1.5 m) of where the pipe enters the premises.

(2.) One or two pair service assumed; ground wire must be accepted by a Nationaly recognized testing laboratory.

(3.) "aj" connector must be accepted by a Nationally recognized testing laboratory.

BILLING CODE 3410–15–C

(n) Where the telecommunications premises system at a customer's access location is grounded to a separate electrode (of any type) this telecommunications grounding electrode must be bonded to the electric grounding system with a No. 6 AWG or larger copper insulated grounding conductor. Bonding of separate electrodes is a requirement of the ANSI/NFPA 70–1996, NEC®.

(o) The NID, BET, or fused primary station protector pair size shall be adequate for the number of lines anticipated within five years.

(p) When lightning damage is considered probable or customer access locations are remote from the borrower's headquarters, use of maximum duty gas tube primary station protectors incorporated in NIDs, BETs, or fused primary station protectors shall be considered. (See RUS TE&CM 823, Electrical Protection by Use of Gas Tube Arresters). Copies of RUS TE&CM 823 are available upon request from RUS/USDA, 1400 Independence Avenue, SW., STOP 1522, Washington, DC 20250–1522, FAX (202) 690–2268.

(q) NIDs or BETs incorporating fuseless station protectors shall always be used in preference to fused station protectors or BETs incorporating fused protectors, when in the judgment of the RUS borrower or the engineer delegated by the RUS borrower, the requirements of the ANSI/NFPA 70–1996, NEC®, for fuseless station protectors can be met.

(r) A fuse link consisting of a copper conductor two gauges (AWG) finer (numerically higher) conductivity than the aerial service wire shall be provided between the cable and aerial service wire where NIDs or BETs incorporating fuseless station protectors are used. Thus for a 22 AWG drop, a fuse link of No. 24 AWG or finer copper wire shall be provided. If the cable circuit is No. 24 gauge or finer, the cable conductors serve as the fuse link for the 22 AWG aerial service wire and no separate fuse link is necessary. (Note: The fuse link or the facilities serving as the fuse link must be located between the telecommunications facilities that are exposed to possible power cross and the customer drop where there is no exposure to possible power cross.)

(s) RUS's buried plant practices require buried main line plant to be protected against power contacts to aerial plant extensions and aerial inserts by No. 24 AWG fuse links at every buried-aerial junction.

(t) In aerial cable plant, fuse links are usually provided by 24 AWG leads on filled terminal blocks regardless of the gauge of the cable conductors. This practice is acceptable if the ampacity of the aerial service wire is sufficiently higher than the fuse link's ampacity.

(u) The grounding and bonding of each NID, BET, or fused primary station protector shall be selected by consulting paragraphs (i) through (n) of this section. The ''first choice'' assembly unit shall be selected whenever the prevailing conditions make its use practicable. The NID, BET, or fused primary station protector assembly unit selected shall be installed in accordance with the appropriate construction drawing specified in RUS Bulletin 345–154 (RUS Form 515g), Specifications and Drawings for Service Entrance and Station Protector Installation. Copies of RUS Bulletin 345–154 are available upon request from RUS/USDA, 1400 Independence Avenue, SW., STOP 1522, Washington, DC 20250–1522, FAX (202) 690–2268.

(v) The minimum size grounding conductor that can be used with a single NID; a group of NIDS; a multipair NID; fused protector; or BET shall be in accordance Table 5, as follows:

TABLE 5.—GROUNDING CONDUCTOR SIZE VERSUS NUMBER OF CIRCUITS

Minimum Grounding Conductor Size	Number of circuits	
	Fuseless (carbon or gas tube)	Fused
#12 AWG, copper, insulated	1 to 2	1 to 3.
#10 AWG, copper, insulated	3 to 5	4 to 7.
#6 AWG, copper, insulated	6 or more	8 or more.

(w) Grounding conductor runs between the NID, BET, or fused station protector and the ground electrode shall conform to the following:

(1) The shortest, most direct route practicable shall be used;

(2) Sharp bends in the grounding conductor shall be avoided during installation;

(3) No splices shall be made in the grounding conductor;

(4) Grounding conductors shall not be fished through walls, under floors, or placed in bridle rings or any metal conduit unless the grounding conductor is bonded to the conductor at both ends of the metallic conduit;

(5) Grounding conductor runs from an outside mounted NID, BET, or fused station protector to an inside ground electrode shall use the same entrance as the station wire; and

(6) Grounding conductor runs from an outside mounted NID, BET, or fused station protector to an outside ground electrode at the building shall be attached to the exterior surface of the building or buried. If buried, the grounding conductor shall be either plowed or trenched to a minimum depth of 12 in. (300 mm). When trenched, the trenches shall be as close to the side of the building as practicable, backfilled, and tamped to restore the earth to its original condition.

(x) Telecommunications grounding connectors shall be RUS accepted or RUS technically accepted. Grounding and bonding conductors shall be made of copper. Where the grounding and bonding conductors must be connected to aluminum electric service grounding conductors, bimetal grounding connectors shall be used.

(y) Grounding conductor attachments shall conform to the following:

(1) Galvanized nails or clamps, or nickel-copper alloy staples shall be used for grounding conductor attachments in accordance with Table 6 in paragraph (y)(3) of this section.

(2) Grounding conductors, station or buried service wires in parallel runs may share the same fastening device when the device is specifically designed for two wires. See Table 6 in paragraph (y)(3) of this section for station wire and grounding conductor fasteners; and

(3) Grounding conductor fasteners shall be placed 12 to 18 in. (300 to 450 mm) apart on straight runs and 2 to 4 in. (50.8 to 100 mm) apart at corners and at bends. Table 6 is as follows:

BILLING CODE 3410–15–P

Table 6

TYPICAL FASTENING DEVICES FOR STATION WIRES AND GROUNDING CONDUCTORS (9)

TYPE AND GAUGE OF WIRE		APPROX. OVERALL DIAMETER	TYPES OF FASTENING DEVICES FOR VARIOUS TYPES OF BUILDINGS OR WALL FINISHES						
			Hard Woods	Soft Woods	Wallboard, Plaster on Wood, or Metal Lath, or Concrete Block(3)	Brick, Stone or Concrete(3)	Shingles and Siding(4)	Sheet Metal(5)	Wall Tile(3)
#22 AWG Station Wire		.125 in. to .155 in.	A1, D7, E1, F1, G1	A2, A3, D8, E2, F2, G2	D8, D9, E2, E3, G2, G3	D8, E2, G2	A2, A3, D7, D8, E2, F2	D7, D8, D9, G1, G2, G3, H1	D8, D9, E2, E3, G2, G3, H1
GROUNDING CONDUCTOR	#10 AWG Insulated Wire	.168 in.	A1, B1, D1	A2, A3, B1, B2, D2	B2, D2, D3	B2, D2	A2, A3, B1, B2, D1, D2	D1, D2, D3, H2	B2, D2, D3, H2
GROUNDING CONDUCTOR	#12 AWG Insulated Wire	.127 in.	A1, B1, C1, E1, F1, D7, G1	A2, B1, B2, C1, C2, D8, E2, F2, G2	B2, C2, C3, D8, D9, E2, E3, G2, G3	B1, B2, C2, D8, E2, E3, G2	A2, A3, B1, B2, C1, C2, D8, E2, F2, G2	C1, C2, C3, D7, D8, D9, E1, E2, E3, G1, G2, G3, H1	B2, B3, C3, D8, D9, E2, E3, G2, G3, H1
GROUNDING CONDUCTOR	#6 AWG Insulated Wire	.290 in.	A2, A3, B1, D4	A3, B2, D5	B2, D5, D6	B2, D5	A3, B2, D5	D4, D5, D6, H3	B2, D5, D6, H3

EXPLANATION OF FASTENER CODES

A. Staple Machine, Round Crown, Interior Use Only – (Note 6)

1. 3/16" or 1/4" Crown – 3/8" Leg
2. 3/16" or 1/4" Crown – 7/16" or 9/16" Leg
3. 3/16" or 1/4" Crown – 9/16" Leg

B. Nail, Ground Wire, Single Shank Galvanized, Interior and Exterior Use

1. 7/8" #14
2. 1–3/8" #13

C. Clamp, Ground Wire, One Hole, Galvanized, Interior and Exterior Use

1. Type B–1/2" x #6 RH Screw (1)
2. Type B–3/4" x #6 RH Screw (1)
3. Type B–1/8" x 3" Toggle Bolt (2)

D. Clamp, One Hole Offset, Galvanized or Enameled, Interior and Exterior Use – (Note 7)

Wire Size Min.	Wire Size Max.	Fasteners (1), (2)
1. 5/32"	to 7/32"	1/2" x #6 RH Screw
2. 5/32"	to 7/32"	3/4" x #6 RH Screw
3. 5/32"	to 7/32"	1/8" x 3" Toggle Bolt
4. 1/4"	to 5/16"	1/2" x #6 RH Screw
5. 1/4"	to 5/16"	1" x #6 RH Screw
6. 1/4"	to 5/16"	1/8" x 3" Toggle Bolt
7. 1/8"	to 5/32"	1/2" x #6 RH Screw
8. 1/8"	to 5/32"	3/4" x #6 RH Screw
9. 1/8"	to 5/32"	1/8" x 3" Toggle Bolt

E. Clamp, Station Wiring, One Hole, Galvanized or Enameled, Interior and Exterior Use – (Note 7)

1. Type B–1/2" x #6 RH Screw (1)
2. Type B–3/4" x #6 RH Screw (1)
3. Type B–1/8" x 3" Toggle Bolt (2)

F. Nail, Station Wiring, Galvanized or Enameled, Interior and Exterior Use – (Note 7)

1. Type B – 1/2"
2. Type B – 7/8"

G. Clamp, One Hole Double – (Note 8)

Wire Size Min.	Wire Size Max.	Fasteners
1. Two 1/8"	to 5/32"	3/4" x #6 RH Screw(1)
2. Two 1/8"	to 5/32"	1" x #6 RH Screw(1)
3. Two 1/8"	to 5/32"	1/8" x 3" Toggle Bolt(2)

H. Station Wire Clip, Adhesive Backed, Interior Use Only –

Wire Size

1. 1/8" Nominal
2. 3/16" Nominal
3. 1/4" Nominal

BILLING CODE 3410–15–C

Notes: [1] Screw dimensions are minimum. Where appropriate, either or both dimensions shall be increased. All wood screws for exterior use shall be stainless steel. All other exterior metal devices shall be stainless steel, zinc coated steel, silicon bronze, or corrosion resistant aluminum alloy.

[2] Toggle bolt dimensions are minimum. Where appropriate, either or both dimensions shall be increased.

[3] Wall screw anchors may be used in wall board, plaster or tile walls. Screws and nails in masonry shall be secured by means of expansions type anchors. Equivalent manual or machine-driven devices may be used. Where toggle bolts are specified, equivalent devices may be used.

[4] Lead holes shall be drilled for screws, nails, and bridle rings in shingles and drop siding.

[5] Sheet metal screws shall be used except where toggle bolts are required. Where wood sheathing under sheet metal siding is encountered, the sheet metal may be drilled or punched and a wood screw used.

[6] Machine-driven staples of nickel-copper composition may be used for exterior wiring.

[7] Galvanized clamps and wiring nails may be used for exterior and interior wiring. Enameled clamps shall be used for interior wiring only. Where toggle bolts or equivalent devices require holes in the structure larger than the clamp being fastened, a suitable washer of sufficient size to cover the hole must be used under the clamp.

[8] Double clamp may be used where two #22 AWG station wires, two #12 AWG grounding conductors, or one #22 AWG station wire and one #12 grounding conductor parallels one another.

[9] For converting English units to Metric units use 1 in. = 25.4 mm.

(z) Grounding conductors shall be separated from non-telephone company wires in accordance with Section 800–12(b) of the ANSI/NFPA 70–1996, *NEC®*.

(aa) Grounding conductors run through metal conduits shall be bonded to the conduit at each end. RUS accepted and RUS technically accepted pipe type ground clamps and grounding connectors shall be used for bonding.

(bb) Where NID, BET, or fused station protector assembly units require grounding conductor connections to pipe systems, the following apply:

(1) The connection shall be made to a cold water pipe of an operating water system;

(2) The connection point shall be preferably inside the building;

(3) Allow a minimum of 6 in. (152 mm) between the last fastener and the point where the grounding conductor first touches the water pipe;

(4) Leave 2 in. (50.8 mm) of slack in the grounding conductor to avoid breaking the conductor at the terminating point. Tape the grounding conductor to the pipe where possible to avoid movement. In no case, shall the grounding conductor be coiled or wrapped around the pipe;

(5) The pipe shall be cleaned with fine sand paper to make a good electrical connection. Care should be taken to avoid damaging the pipe while cleaning it;

(6) Attach the pipe grounding conductor connector to the cleaned area of pipe and tighten. Care shall be exercised to avoid deforming, crushing, or otherwise damaging the pipe. A simple continuity check with an ohmmeter between the connector and the pipe will indicate whether or not a good electrical contact has been made. Set the ohmmeter to ''R×1'' scale to ensure that a low resistance contact is made;

(7) A warning tag shall be attached to the ground clamp with the following or equivalent statement: ''Call the telecommunications company if this connector or grounding conductor is loose or must be removed''; and

(8) When the water pipe is used, the ANSI/NFPA 70–1996, *NEC®*, requires that metal piping be used as a bonding conductor in this manner only when the connections to the pipe are within 5 ft (1.5 m) of where the pipe enters the premises.

(cc) Bonding conductors shall consist of either copper or tinned copper insulated wires of appropriate sizes.

(1) Bonding conductors shall be run and attached in the same manner as grounding conductors.

(2) Attaching and terminating devices for bonding conductors shall be adequate for the size of wire involved. The No. 6 AWG copper insulated conductor or larger shall not be terminated by bending it around a threaded stud.

(dd) Where NID, BET, or fused station protector assembly units require a driven ground rod the following shall apply to the ground rod installation:

(1) Locate the ground rod at least 1 ft (300 mm) from buildings, poles, trees and other obstruction;

(2) Ground rods shall not be installed within 6 ft (2 m) of electric service ground rods (Note: This minimum separation is provided to avoid mutual impedance effects of multiple grounding electrodes that will deleteriously degrade the effective impedance-to-earth if grounding electrodes are installed any closer than 6 ft (2 m) to one another. This requirement is included for special cases where the telecommunications company is not allowed, for some reason, to observe the RUS preferred grounding method of attaching the primary protector grounding conductor directly to an accessible point on the building electric service grounding system. RUS believes that if the primary protector location can be sited within 6 ft (2 m) of the electric service ground rod then the electric service ground rod could be used as the preferred telecommunications grounding electrode and a separate telecommunications ground rod is unnecessary);

(3) A hole, 15 in. (350 mm) deep and 6 in. (150 mm) in diameter, shall be dug at the location where the ground rod is to be driven;

(4) Where ''slip-on'' type ground rod clamps are used instead of ''clamp-around'' type clamps, the ground rod clamps shall be placed onto the rod prior to driving the rod into the ground (Note there should be one clamp for the NID, BET, or fused station protector grounding conductor and one clamp for the conductor required to bond the telecommunications ground rod to the electric grounding system). However, the clamp shall not be tightened until the rod is completely driven. The end of the rod shall be placed in the bottom of the hole and the rod shall be aligned vertically adjacent to one wall of the hole prior to driving. The rod shall be driven until its tip is 12 in. (300 mm) below final grade. The grounding conductor shall then be attached, the clamp shall be tightened, and hole backfilled. Clamps employed in this manner shall be suitable for direct burial and shall be RUS accepted or RUS technically accepted; and

(5) Where rods are manually driven, a large number of blows from a light hammer (4 lbs [1.8 kg]) shall be used instead of heavy sledgehammer type blows. This should keep the rod from bending.

(ee) Terminations on fuseless primary station protectors incorporated in NIDs and on fused primary station protectors shall be as shown in Figures 10, 11, 12, 13, 14, and 15 of paragraph (ee)(1) of this section. The inner jackets of buried service wires and outer jackets of cables used as service drops shall be extended into the NID or the fused primary station protector. A 10 in. (250 mm) length of each spare wire shall be left in NIDs or fused primary station protectors. The spare wires shall be coiled up neatly and stored in the NID

or fused primary station protector housing.

(1) The shields of buried service wires may be connected to the ground binding post using RUS accepted or RUS technically accepted buried service shield bond connectors as shown in Figure 10 for NIDs and Figure 11 for fused primary station protectors. RUS accepted or RUS technically accepted buried service wire harness wires designed for customer access location installations may also be used for terminating buried service wire shields to the ground binding post of the NID as shown in Figure 12 and Figure 13 for fused primary station protectors. Figures 10 through 13 are as follows:

BILLING CODE 3410–15–P

FIGURE 10

BONDING BURIED SERVICE WIRE AT STATION PROTECTOR OF NID USING SERVICE WIRE SHIELD BOND CONNECTOR

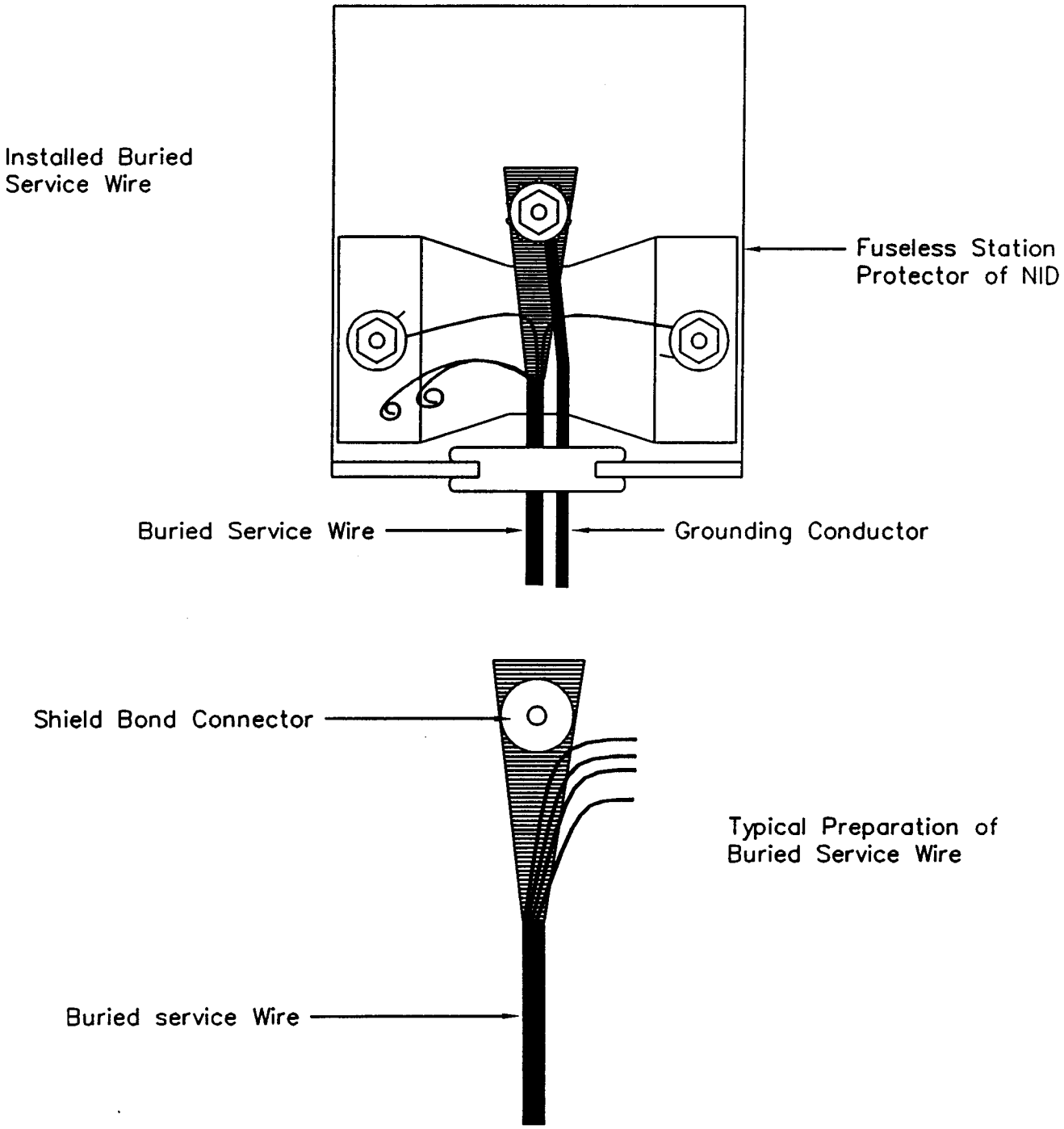

FIGURE 11

BONDING BURIED SERVICE WIRE AT FUSED STATION PROTECTOR USING SERVICE WIRE SHIELD BOND CONNECTOR

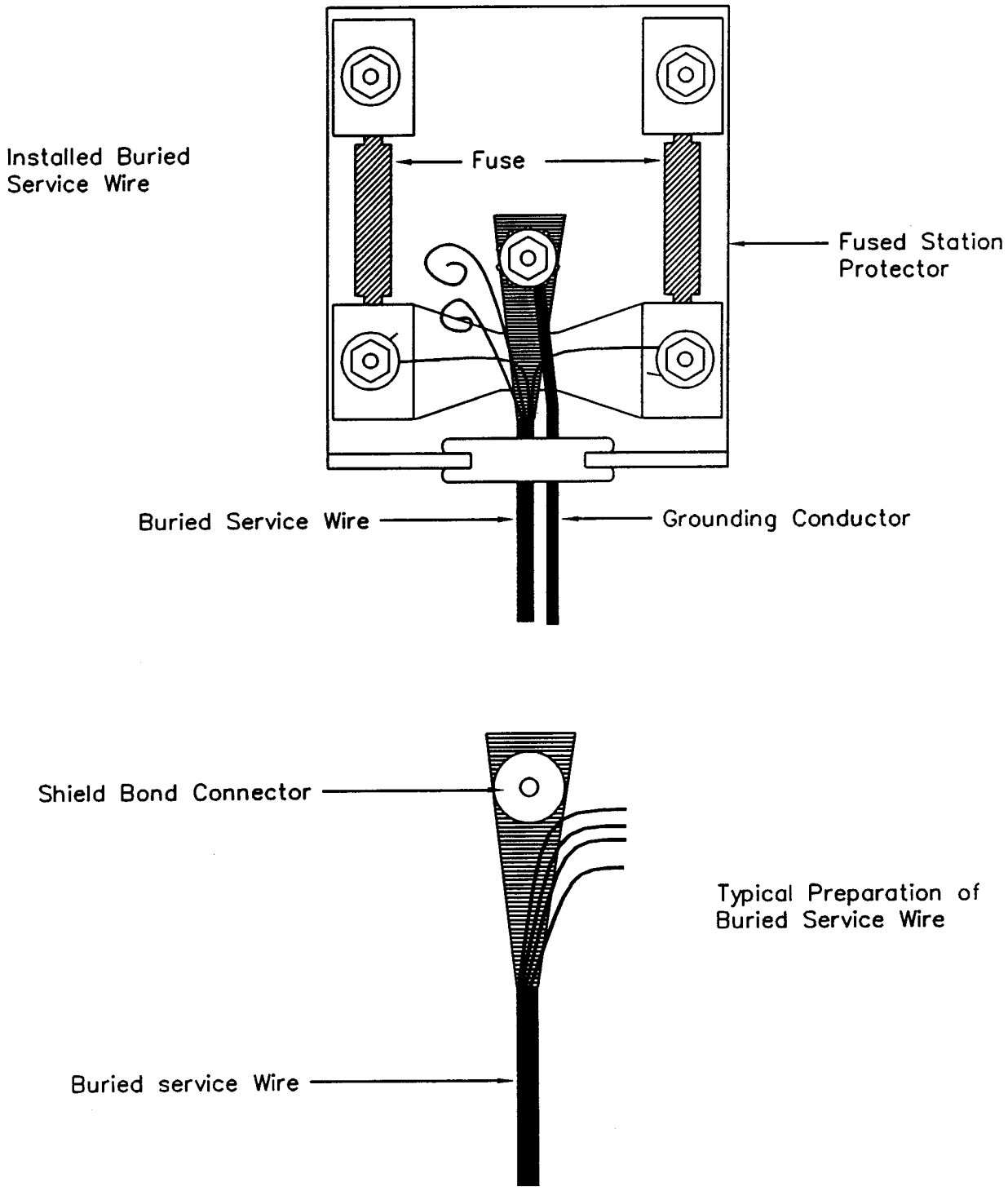

FIGURE 12

BONDING BURIED SERVICE WIRE AT STATION PROTECTOR OF NID USING SERVICE WIRE BONDING HARNESS

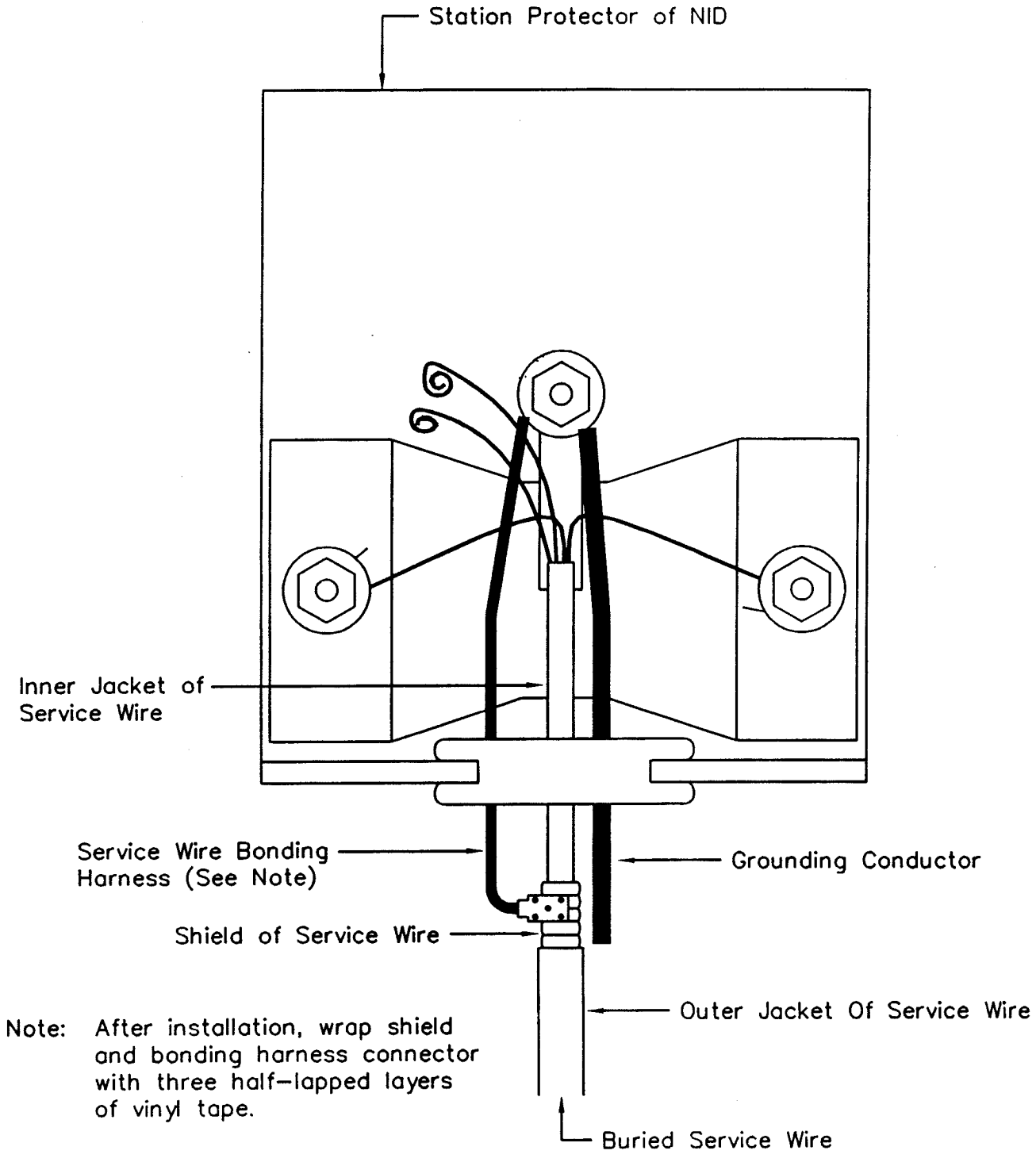

Note: After installation, wrap shield and bonding harness connector with three half-lapped layers of vinyl tape.

FIGURE 13

BONDING BURIED SERVICE WIRE AT FUSED STATION PROTECTOR USING SERVICE WIRE BONDING HARNESS

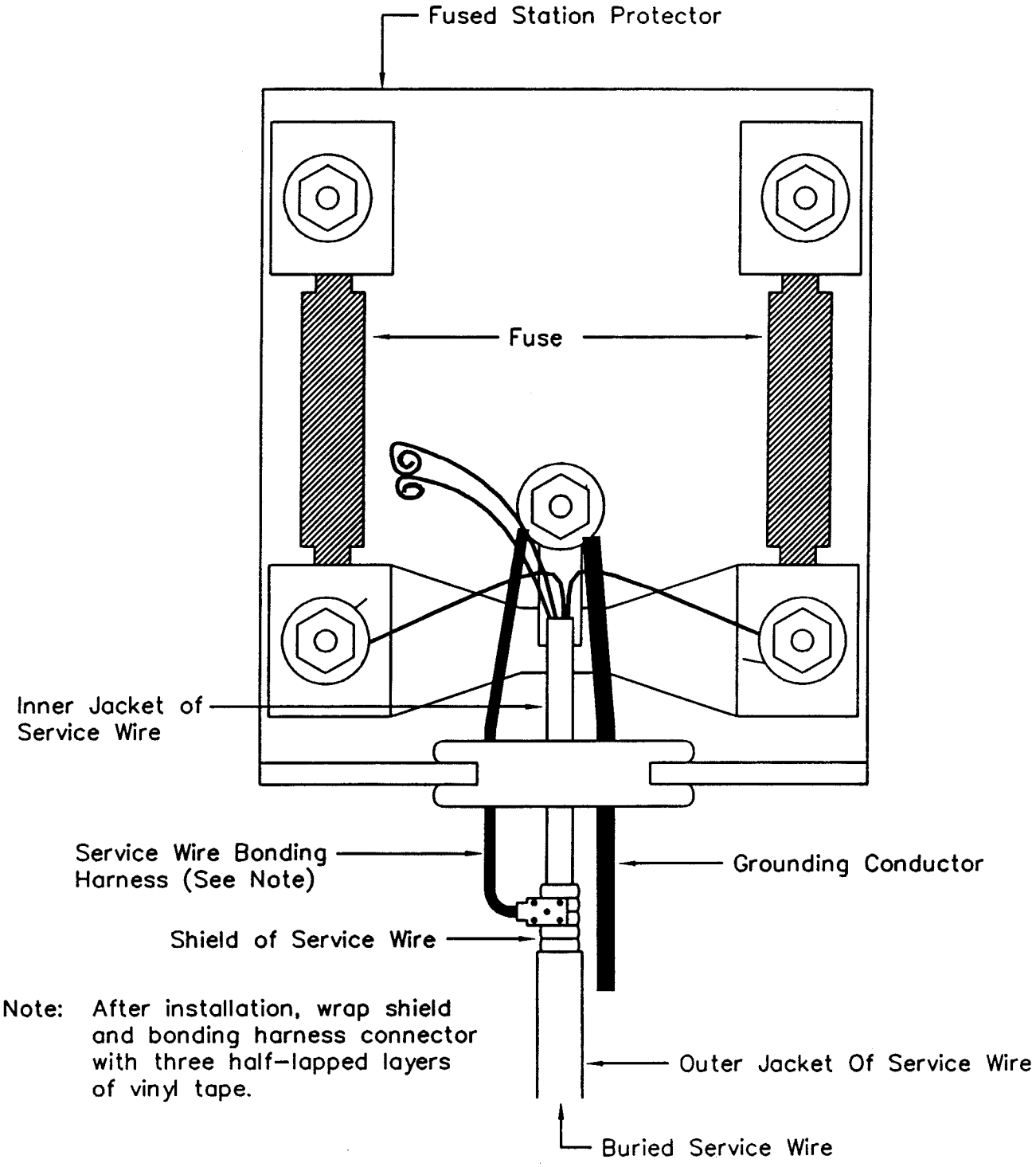

BILLING CODE 3410–15–C

(2) On buried service drops and aerial service drops of more than 6 pairs using RUS accepted or RUS technically accepted cables, the shields shall be terminated with a RUS accepted or RUS technically accepted cable shield bonding connector and extended to the ground binding post of the NID, BET, or fused primary station protector with a RUS accepted or RUS technically accepted bonding harness wire. The installation of the shield bond connector and bonding harness wire shall be in accordance with the manufacturer's instructions.

(3) The shield and other conductors at the fuseless primary station protector incorporated in the NID shall be terminated as shown on Figure 14 in paragraph (ee)(4) of this section. The pronged or cupped washer shall be placed above the shield. The grounding conductor shall be placed around the post on top of the pronged or cupped washer. A flat washer shall be placed above the grounding conductor.

(4) The station wire signaling ground conductor, if required, shall be placed above the first flat washer and beneath the second flat washer as indicated in Figure 14 as follows:

BILLING CODE 3410–15–P

FIGURE 14

TERMINATION OF CONDUCTORS AND SHIELD ON STATION PROTECTOR BINDING POSTS OF NID

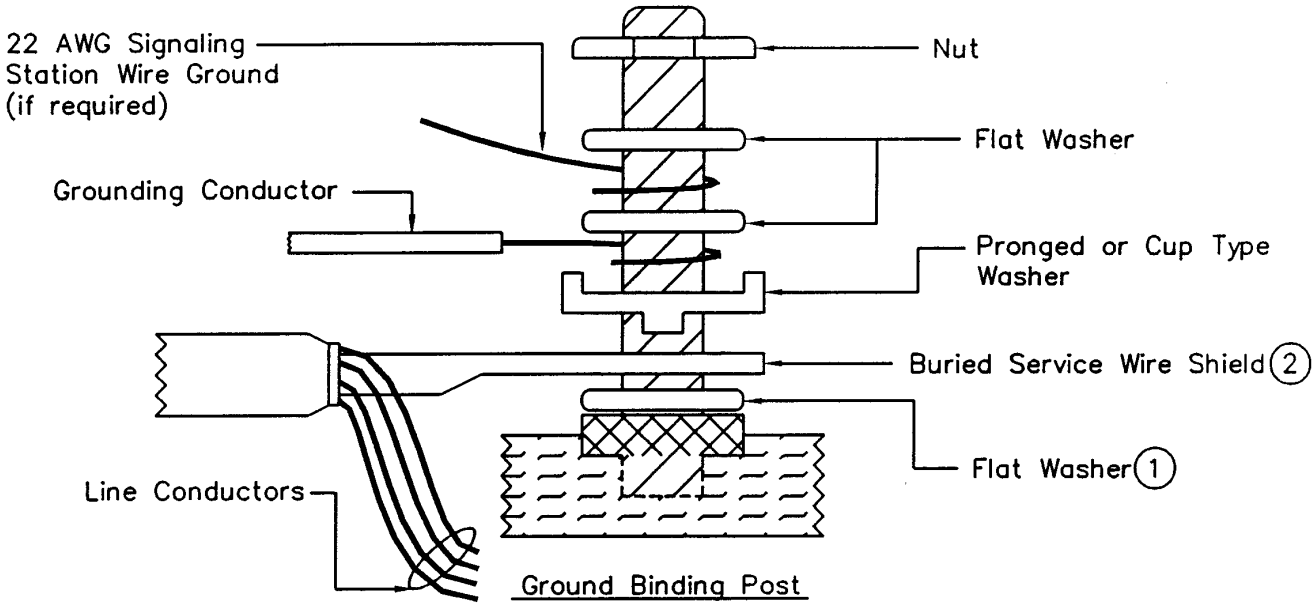

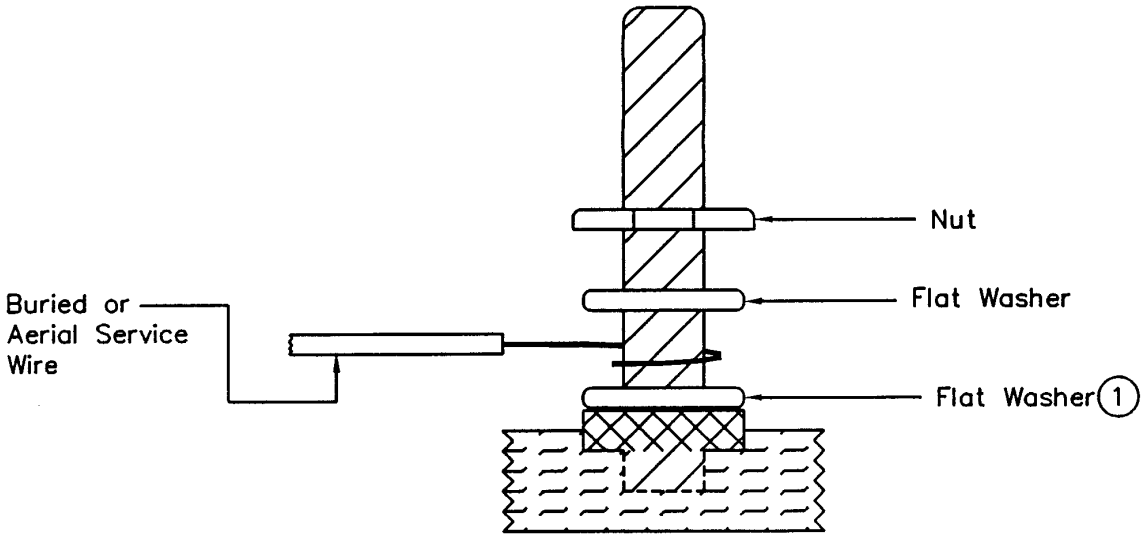

Line Binding Post

Notes:

(1.) If shoulder is inadequate to support shield or wire add a flat washer.

(2.) Terminate buried service wire shield with station protector grounding lug of NID in accordance with either Figure 10 or 12.

BILLING CODE 3410–15–C

(5) The shield and other conductors at the fused primary station protector shall be terminated as shown on Figure 15 in paragraph (ee)(6) of this section. The pronged or cupped washer shall be placed above the shield. The grounding conductor shall be placed around the post on top of the pronged or cupped washer. A flat washer shall be placed above the grounding conductor.

(6) The station wire signaling ground conductor, if required, shall be placed above the first flat washer and beneath the second flat washer as indicated in Figure 15 as follows:

BILLING CODE 3410–15–P

FIGURE 15

TERMINATION OF CONDUCTORS AND SHIELD ON FUSED STATION PROTECTOR BINDING POSTS

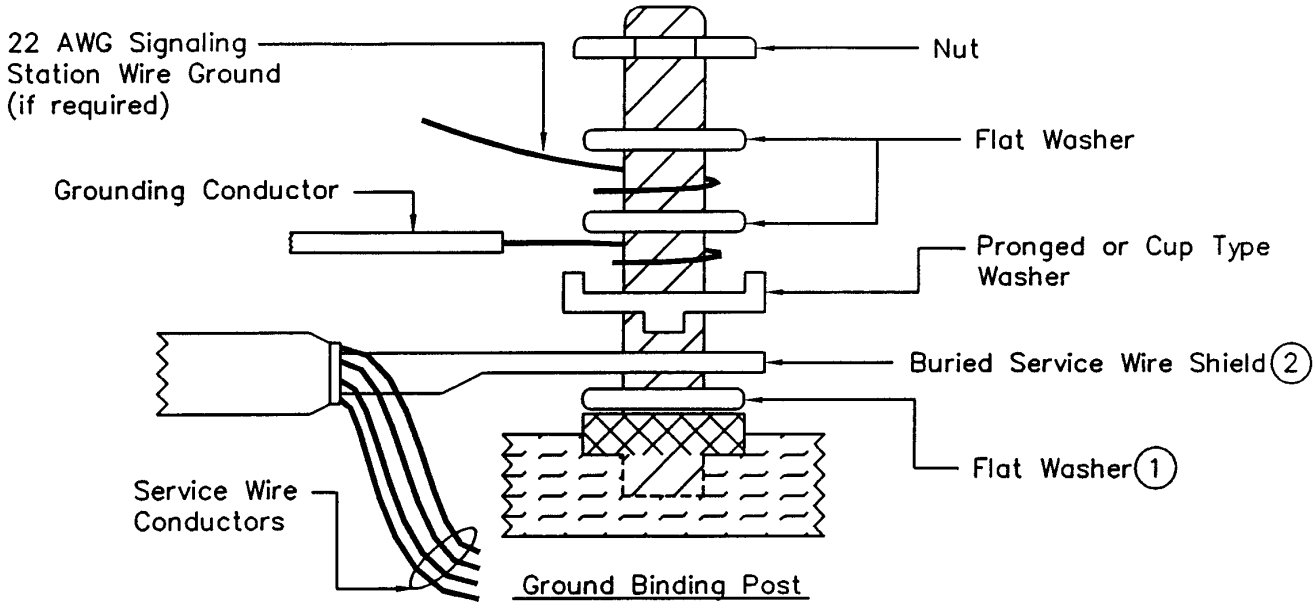

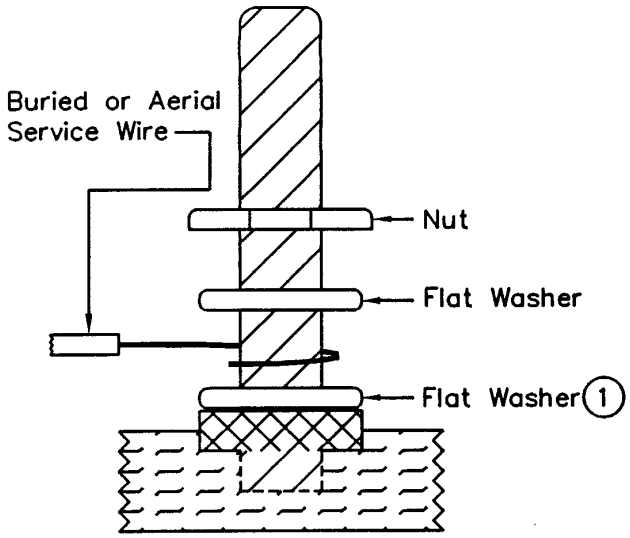

Service Wire Binding Post

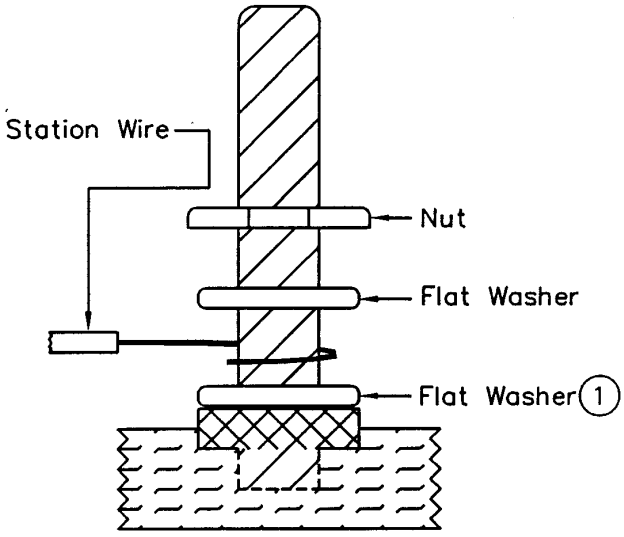

Station Wire Binding Post

Notes:

(1.) If shoulder is inadequate to support shield or wire add a flat washer.

(2.) Terminate buried service wire shield on fused station protector grounding lug in accordance with either Figure 11 or 13.

BILLING CODE 3410–15–C

(7) Indoor NIDs or BETs that are equipped with ''Quick Connect'' type terminals shall not have more than one wire connected per clip. No. 19 AWG copper and No. 18 AWG copper covered-steel reinforced aerial service wire conductors shall not be connected to quick connect terminals. Nonmetallic reinforced aerial service wire using No. 22 AWG copper conductors may be connected to the quick connect terminals.

(8) Tip and ring connections and other connections in multipair NIDs or BETs shall be as indicated in Figure 16 as follows:

BILLING CODE 3410–15–P

FIGURE 16

MULTIPAIR NID OR BET TERMINAL CONNECTIONS CONTAINING FUSELESS STATION PROTECTORS

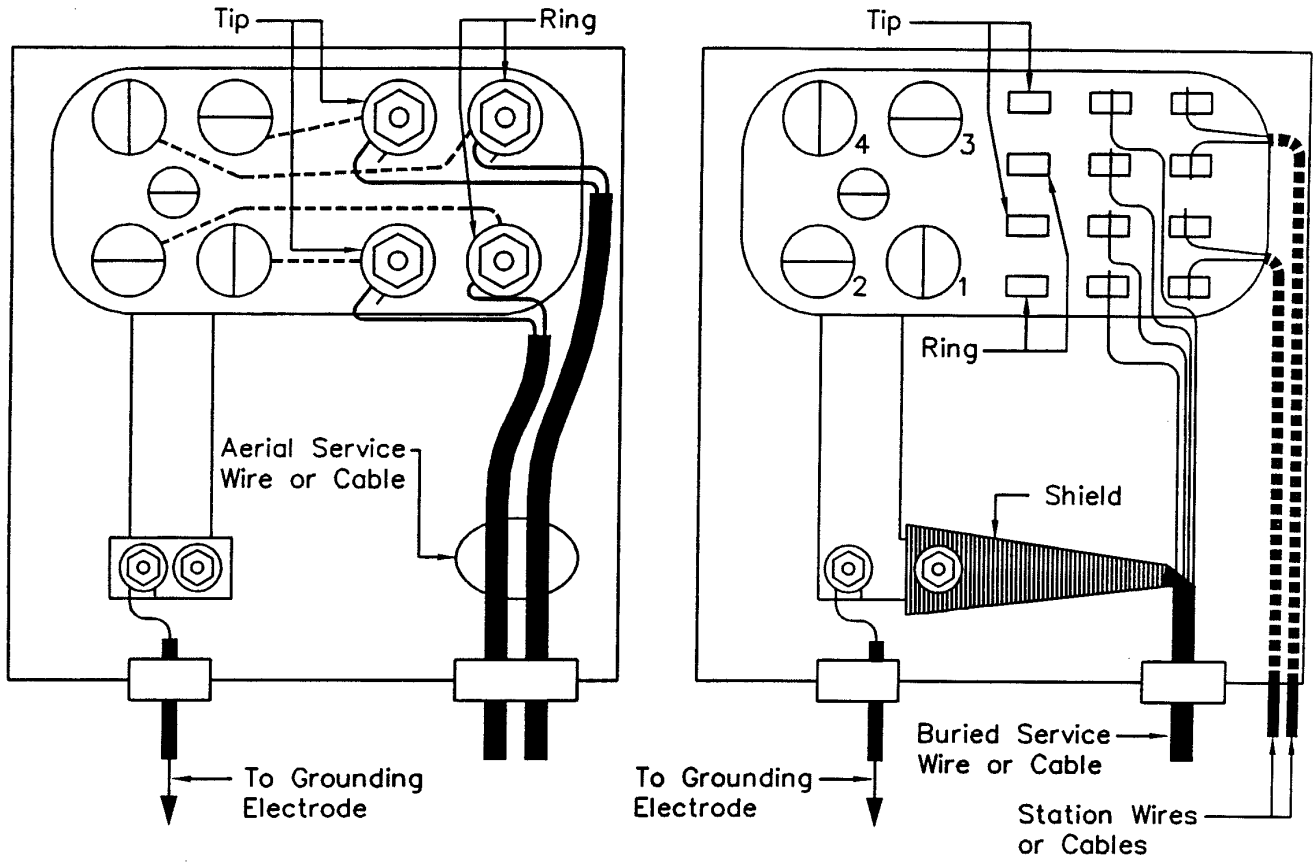

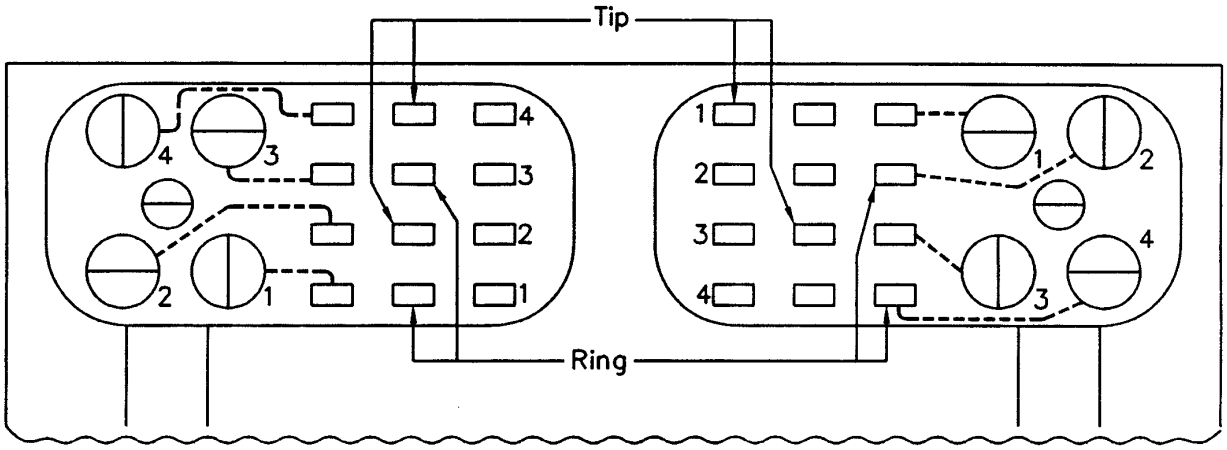

Note: #18 AWG copper–covered steel reinforced aerial service conductors shall not be connected to quick connect terminals. Nonmetallic reinforced aerial service conductors (#22 AWG copper) may be connected to quick connect terminals.

BILLING CODE 3410–15–C

(ff) System polarity and conductor identification shall be maintained in NIDs, BETs, or fused primary station protectors in accordance with construction drawings 815 and 815–1 contained in § 1755.510.

§ 1755.509 Mobile homes.

(a) Customer access location installations at mobile homes shall be treated the same whether the homes are mounted on permanent foundations or temporary foundations and shall be installed as specified in §§ 1755.500 through 1755.510. For the purpose of this section, mobile homes include motor homes, truck campers, travel trailers, and all forms of recreational vehicles. Customer access location installations at mobile homes can be considerably different than customer access location installations at regular homes and borrowers shall be certain that the two types of installations are properly applied.

(b) The method of customer access location installation prescribed by the ANSI/NFPA 70–1996, *NEC*® for a mobile home depends on how the electric power is installed at the mobile home and it can involve considerable judgment on the part of the telecommunications installer. The *National Electrical Code*® and *NEC*® are registered trademarks of the National Fire Protection Association, Inc., Quincy, MA 02269. The ANSI/NFPA 70–1996, *NEC*®, is incorporated by reference in accordance with 5 U.S.C. 552(a) and 1 CFR part 51. Copies are available from NFPA, 1 Batterymarch Park, P. O. Box 9101, Quincy, Massachusetts 02269–9101, telephone number 1 (800) 344–3555. Copies of ANSI/NFPA 70–1996, NEC®, are available for inspection during normal business hours at RUS, room 2845, U.S. Department of Agriculture, 1400 Independence Avenue, SW., STOP 1598, Washington, DC 20250–1598 or at the Office of the Federal Register, 800 North Capitol Street, NW., suite 700, Washington, DC. Essentially, the ANSI/NFPA 70–1996, *NEC*®, requires primary station protectors to be located where specific acceptable grounding electrodes exist. The ANSI/NFPA 70–1996, *NEC*®, allows station protector installations to be at the location of the power meter or the electric disconnecting means apparatus serving the mobile home providing these electric facilities are installed in the manner specifically defined by the ANSI/NFPA 70–1996, *NEC*®. The ANSI/NFPA 70–1996, *NEC*®, requires the station protectors to be installed at the nearest of a number of other meticulously defined ANSI/NFPA 70–1996, *NEC*®, acceptable electrodes where the protector cannot be installed at the power meter or the electric disconnecting means apparatus serving the mobile home. The provisions can be confusing.

(c) To avoid the need for significant telecommunications installer judgment, NIDs shall be installed at mobile homes in either of the following situations:

(1) Where the mobile home electric service equipment (power meter, etc.) or the electric service disconnecting means associated with the mobile home is located within 35 ft (10.7 m) of the exterior wall of the mobile homes it serves, the NID shall be installed in accordance with Figure 17 as follows:

BILLING CODE 3410–15–P

FIGURE 17

NETWORK INTERFACE DEVICE (NID) INSTALLATION ELECTRIC SERVICE EQUIPMENT WITHIN 35 FEET (10.7 METERS) OF MOBILE HOME

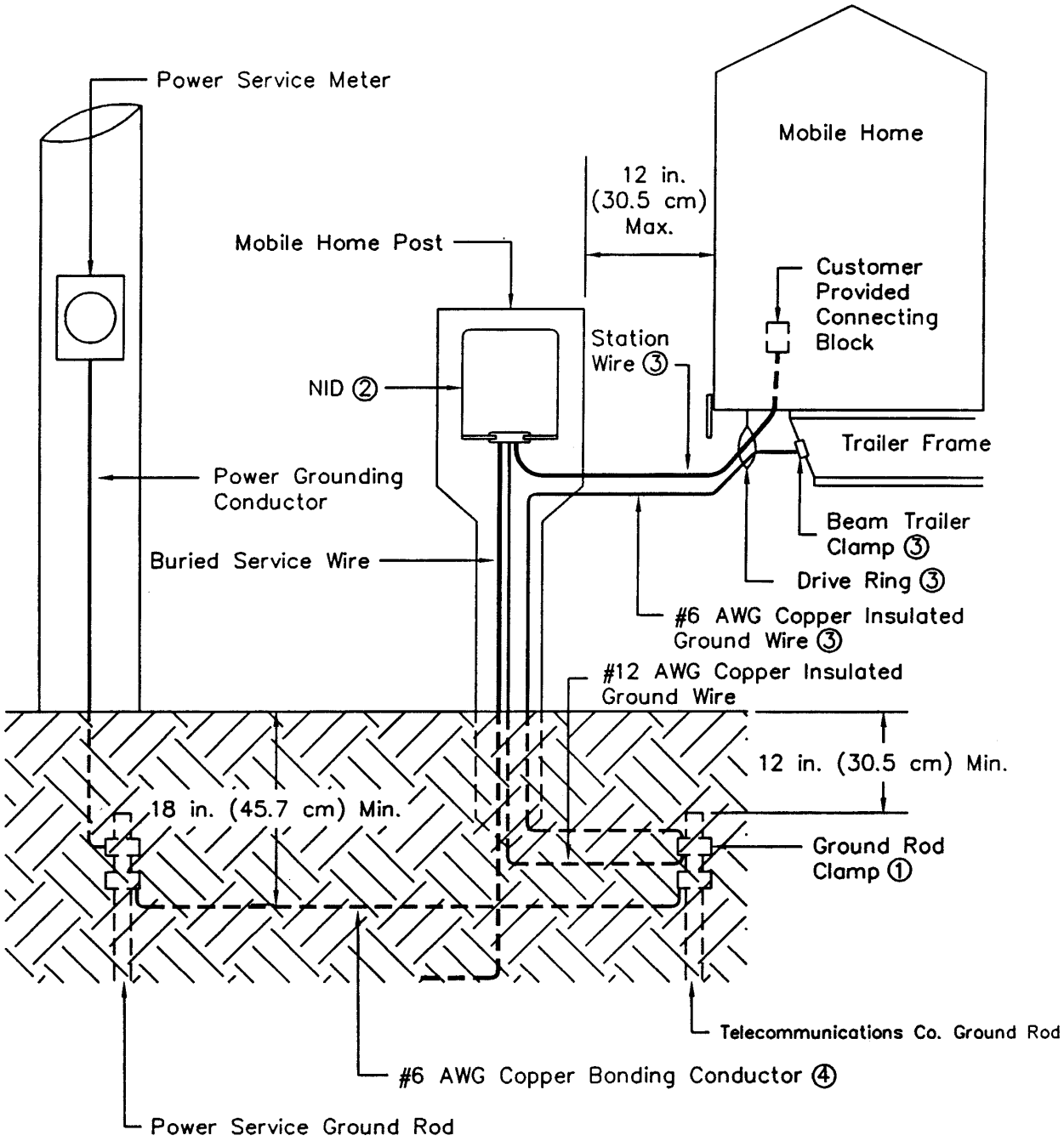

Notes: ① Clamp must be accepted by Listing Agency (UL, etc.) for two conductors, otherwise two clamps must be used.

② See Figure 19 for NID terminations. ③ See Figure 20 for mobile home installation.

④ Bare if buried its entire length; Insulated where human contact is possible.

BILLING CODE 3410–15–C

(2) Where the mobile home electric service equipment (power meter, etc.) or the electric service disconnecting means associated with the mobile home is located more than 35 ft (10.7 m) from the exterior wall of the mobile homes it serves, the NID shall be installed in accordance with Figure 18 as follows:

BILLING CODE 3410–15–P

FIGURE 18

NETWORK INTERFACE DEVICE (NID) INSTALLATION ELECTRIC SERVICE EQUIPMENT MORE THAN 35 FEET (10.7 METERS) FROM MOBILE HOME

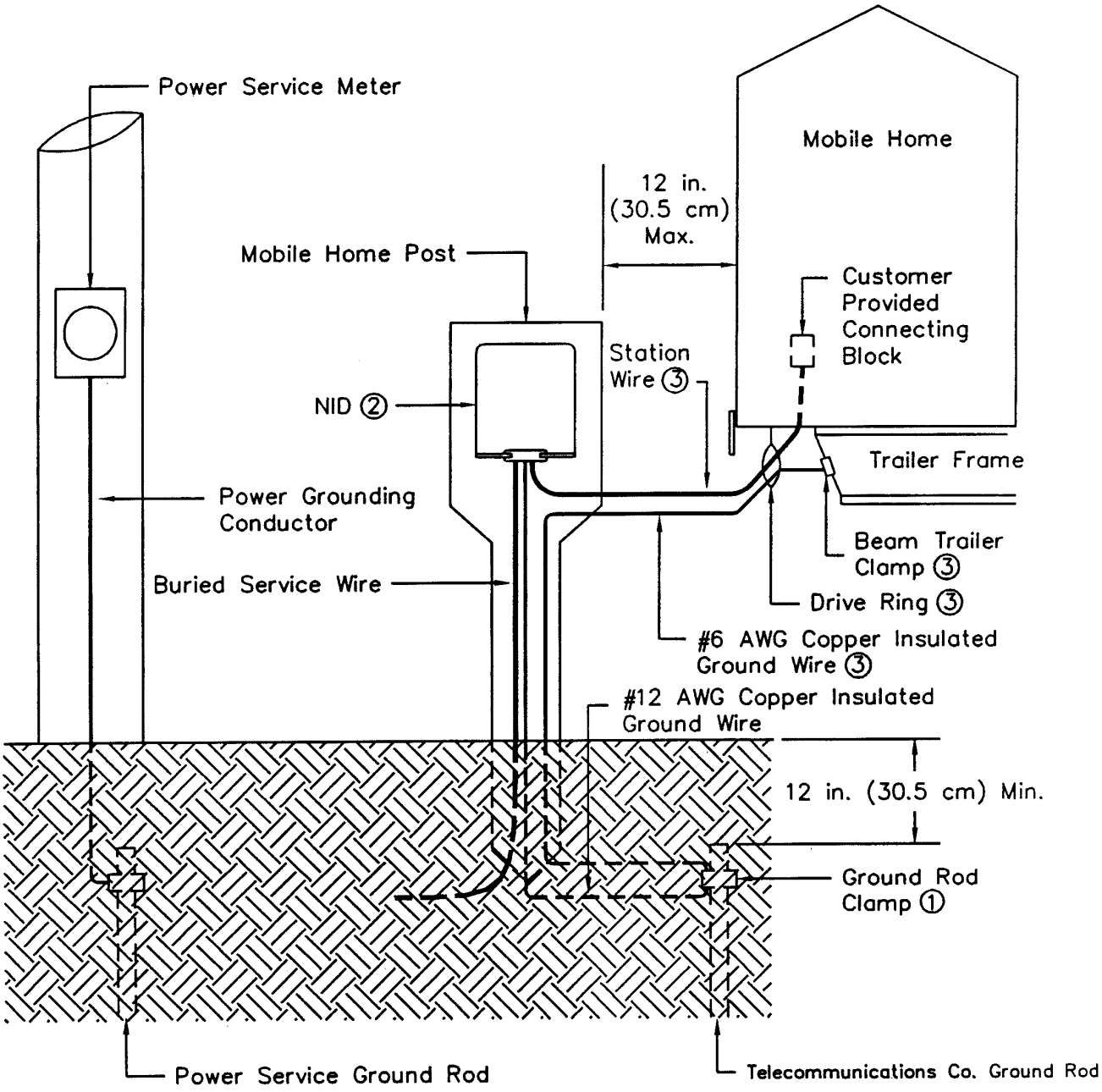

Notes: ① Clamp must be accepted by Listing Agency (UL, etc.) for two conductors, otherwise two clamps must be used.

② See Figure 19 for NID terminations.

③ See Figure 20 for mobile home installation.

BILLING CODE 3410–15–C

(d) The service wire and station wire shall be terminated in the NID in accordance with Figure 19 in paragraph (e) of this section.

(e) Installation of the station wire and grounding conductor at the mobile home shall be in accordance with Figure 20. Figures 19 and 20 are as follows:

BILLING CODE 3410–15–P

FIGURE 19

NID TERMINATIONS

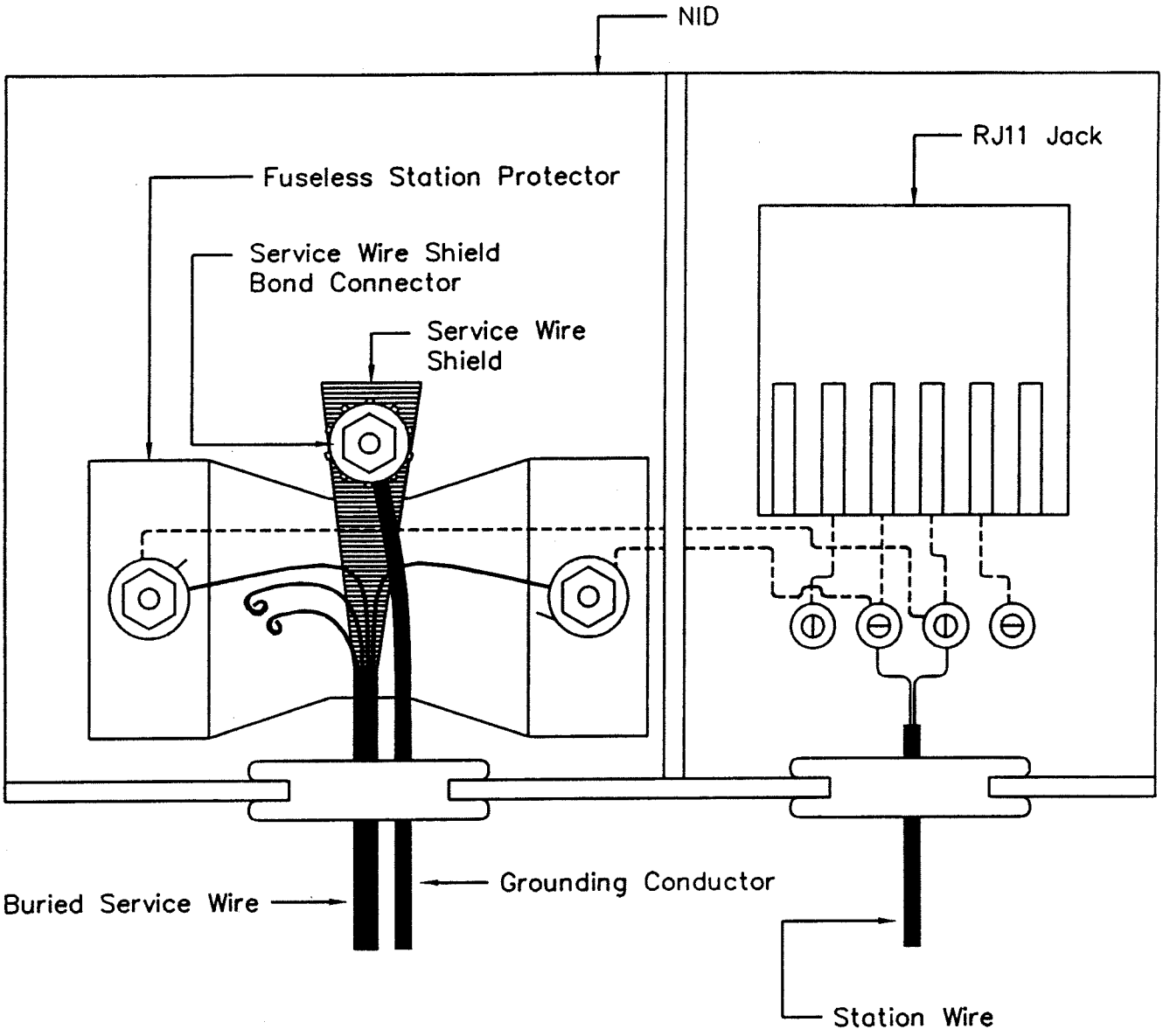

FIGURE 20

MOBILE HOME INSTALLATION

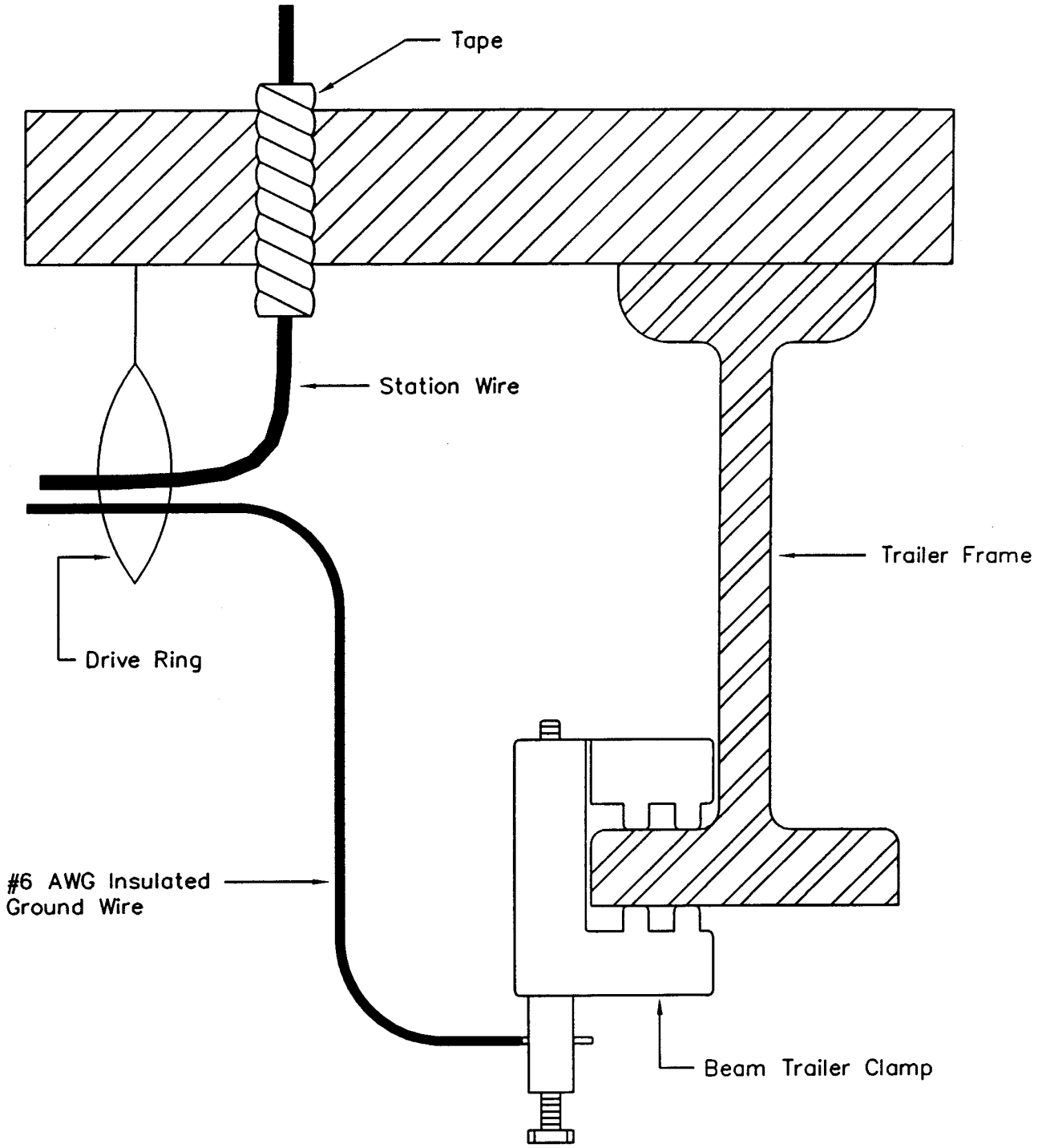

BILLING CODE 3410–15–C

§ 1755.510 Construction and assembly unit drawings.

(a) The construction and assembly unit drawings in this section shall be used by borrowers to assist the installer in making the customer access location installations.

(b) The asterisks appearing on the construction drawings indicate that the items are no longer listed in the RUS Informational Publication (IP) 344–2, ''List of Materials Acceptable for Use on Telecommunications Systems of RUS Borrowers.'' RUS IP 344–2 can be obtained from the Superintendent of Documents, P. O. Box 371954, Pittsburgh, PA 15250–7954, telephone number (202) 512–1800.

(c) Drawings BM83, 312–1, 501–1, 501–2, 503–2, 504, 505, 506, 507, 508–1, 510, 510–1, 510–2, 513, 702, 815, 815–1, 912, 958, and 962 are as follows:

BILLING CODE 3410–15–P

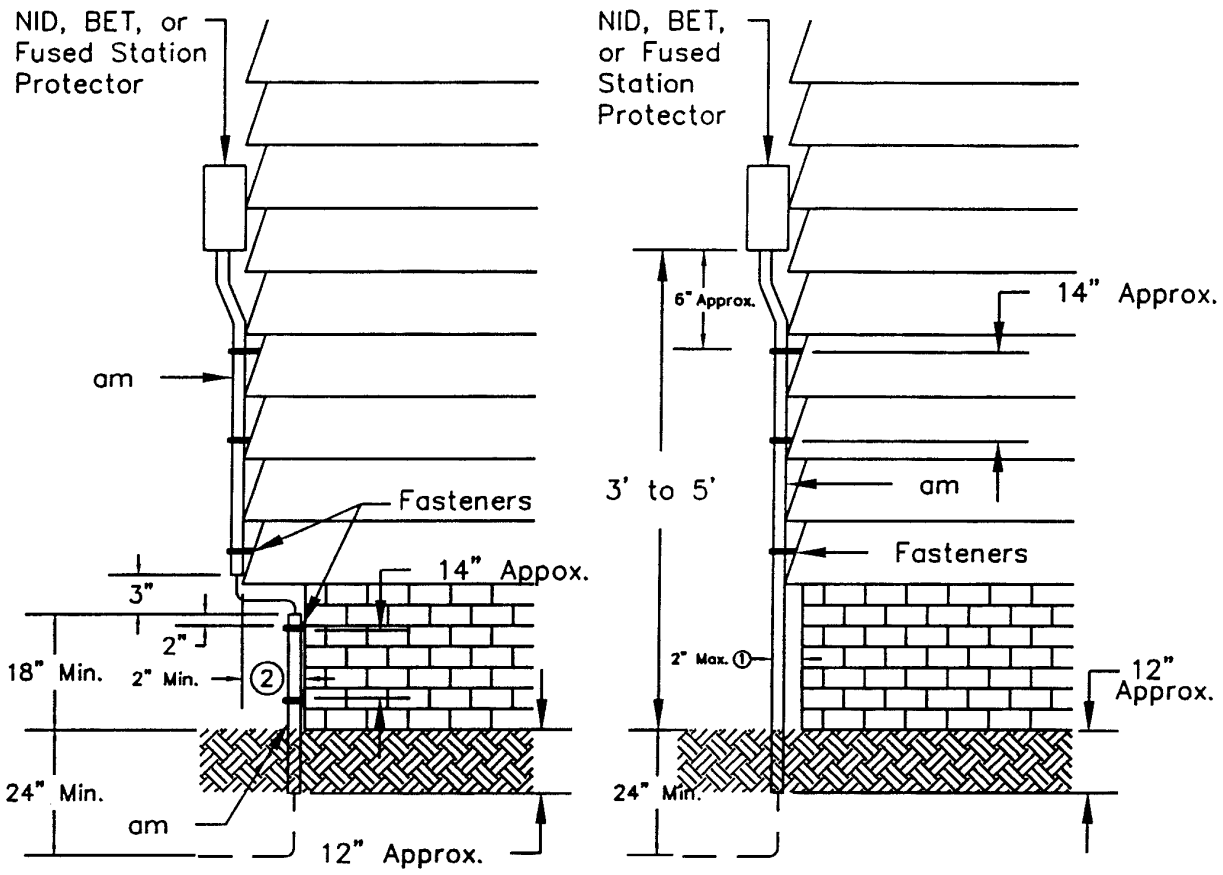

Notes:

1. Where an obstruction of less than 2 inches is encountered, the buried service guard shall extend from the protector to 12 inches below the ground.

2. Where an obstruction of greater than 2 inches is encountered, the buried service guard shall be divided as shown (from the protector to the obstruction, and from 3 inches below the obstruction to 12 inches below the ground).

3. For converting English units to metric units use 1 in. = 25.4 mm and 1 ft = 0.3048 m.

ITEM	MATERIAL	NO. REQ'D
am	Guard, buried service (including fasteners)	1

RURAL TELECOMMUNICATIONS CONSTRUCTION PRACTICES
BURIED SERVICE GUARD

Scale: NTS		August 1997
		BM83

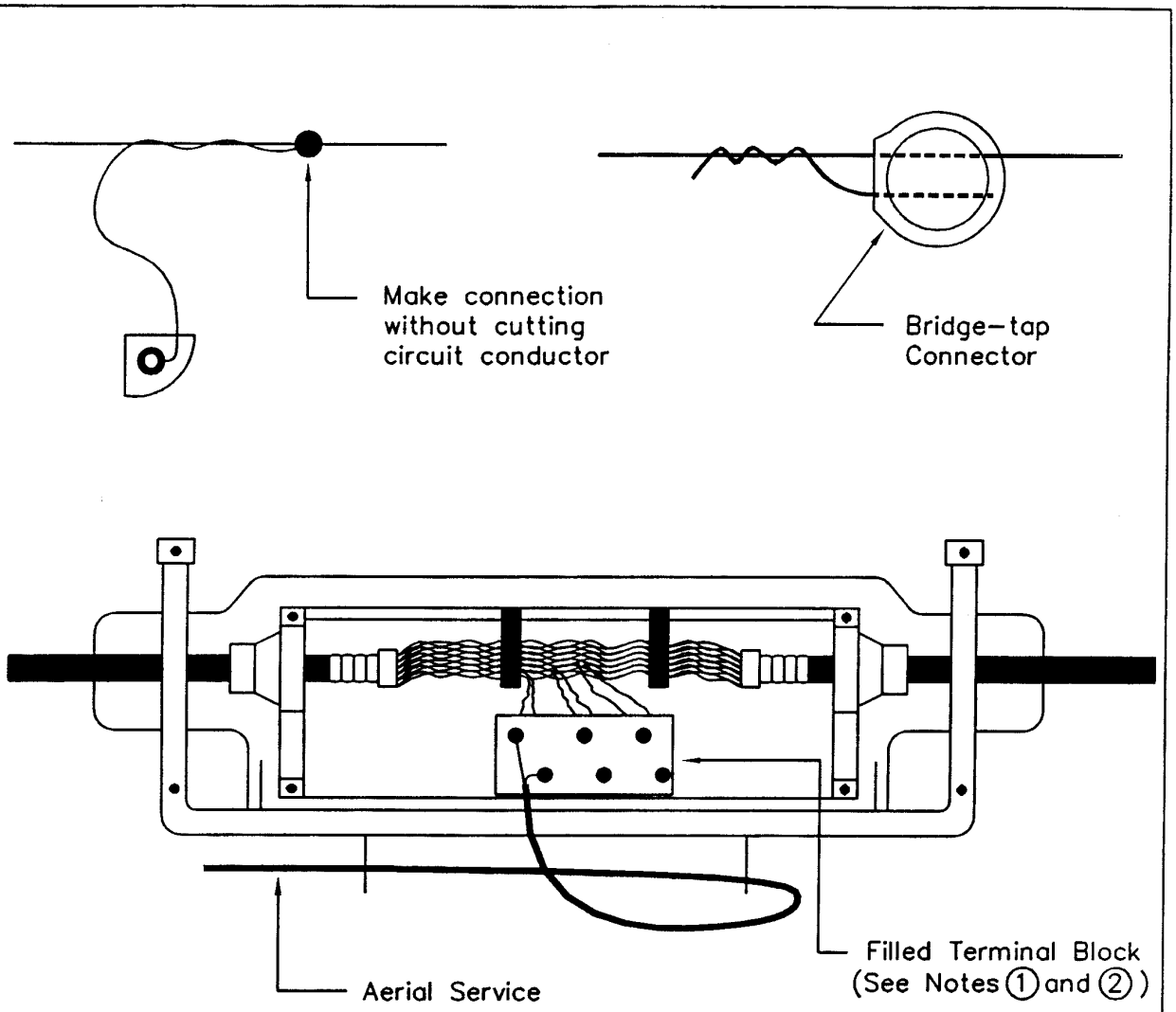

Notes:

1. Where drop wire connections are made along aerial plastic cable use unprotected filled terminal blocks equipped with lead-out wires.

2. Connect the conductors of the aerial service wire directly to the binding posts of the filled terminal block.

RURAL TELECOMMUNICATIONS CONSTRUCTION PRACTICES AERIAL PLASTIC CABLE DETAILS OF WIRE CONNECTIONS TO TERMINAL BLOCKS		
Scale: NTS		August 1997
		312-1

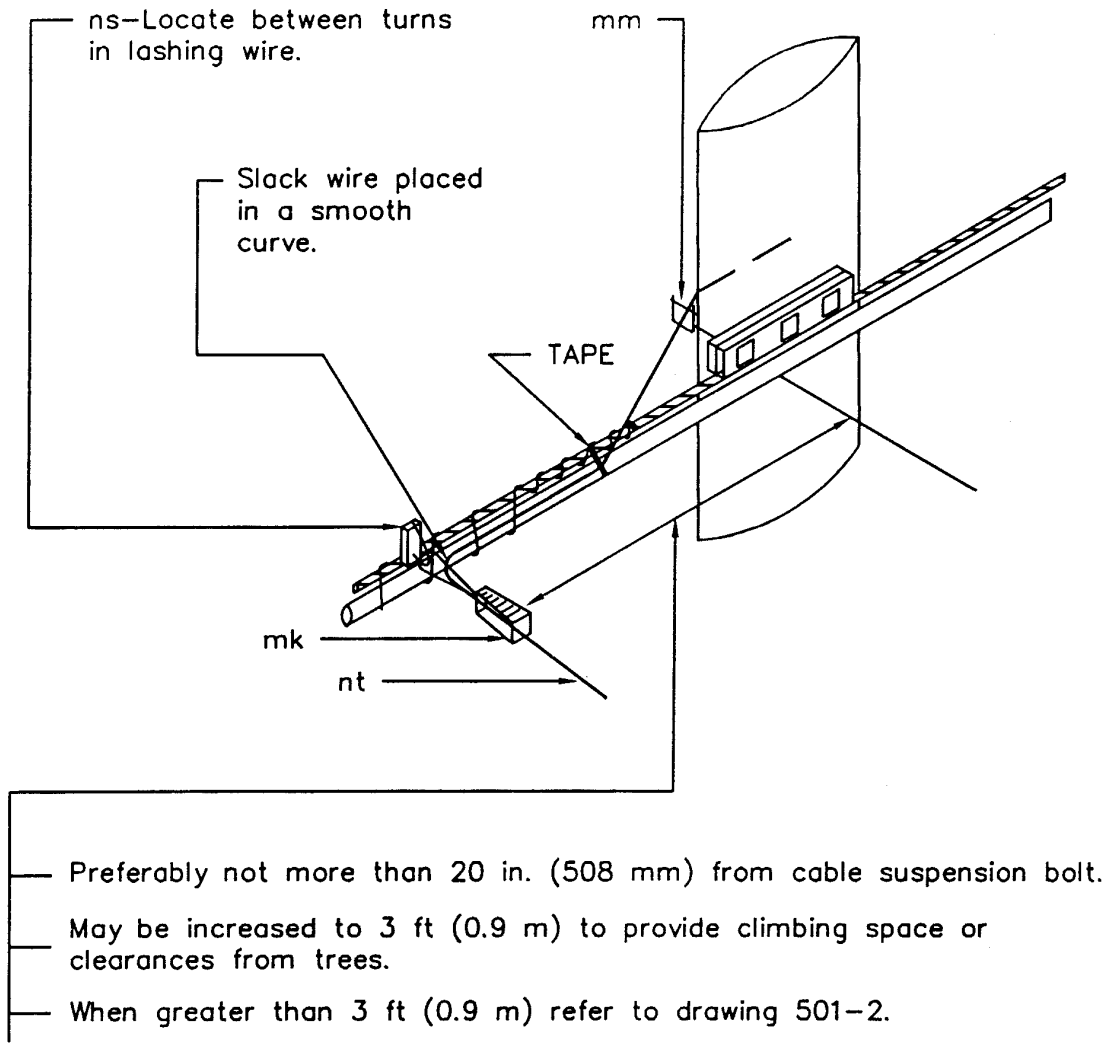

ITEM	NO. REQUIRED	MATERIAL
*mm	As Required	Rings, drive
*ns	As Required	Clamps, span
mk	As Required	Clamps, drop wire
nt	As Required	Wire, aerial service

RURAL TELECOMMUNICATIONS CONSTRUCTION PRACTICES
SPAN CLAMP ATTACHMENT

Scale: NTS | August 1997

501–1

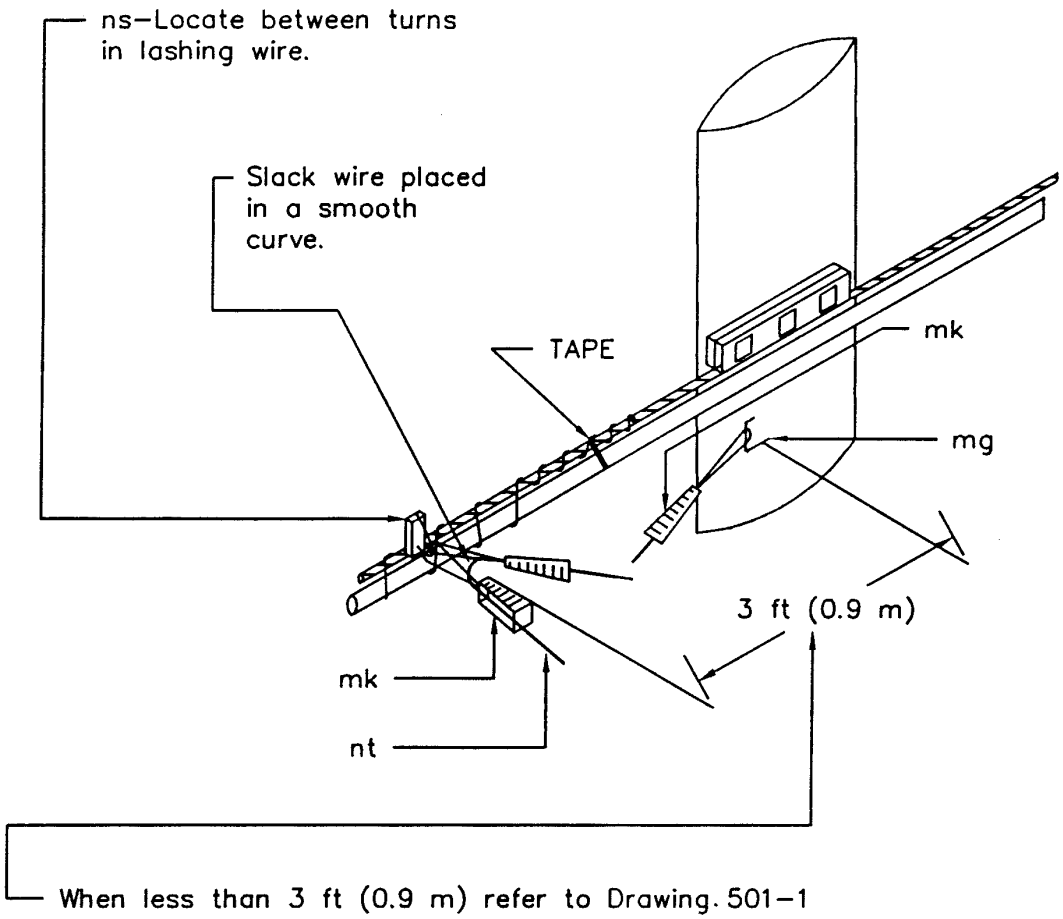

ITEM	NO. REQUIRED	MATERIAL
*mg	As Required	Hooks, drive
*ns	As Required	Clamps, span
mk	As Required	Clamps, drop wire
nt	As Required	Wire, aerial service

RURAL TELECOMMUNICATIONS CONSTRUCTION PRACTICES
SPAN CLAMP ATTACHMENT

Scale: NTS		August 1997
		501–2

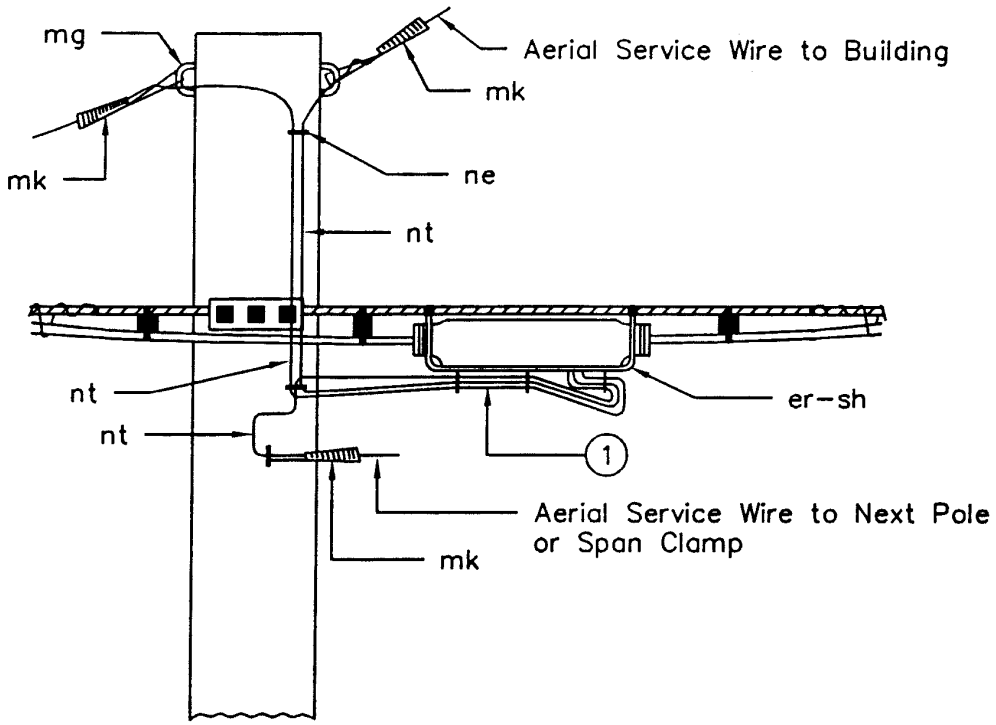

Note:

1. Install aerial service wiring through all rings on bottom of terminal housing. Turn wire back around last ring to assigned pair. Form wire loosely to avoid sharp bends.

ITEM	NO. REQUIRED	MATERIAL
*mg	As required	Hooks, drive
*ne	As required	Rings, bridle
er	–	Enclosures, ready–access
sh	–	Blocks, filled, terminal, unprotected
nt	As required	Wire, aerial service
mk	As required	Clamps, drop wire

RURAL TELECOMMUNICATIONS CONSTRUCTION PRACTICES
SERVICE WIRE CONNECTIONS TO AERIAL CABLE

Scale: NTS		August 1997
		503–2

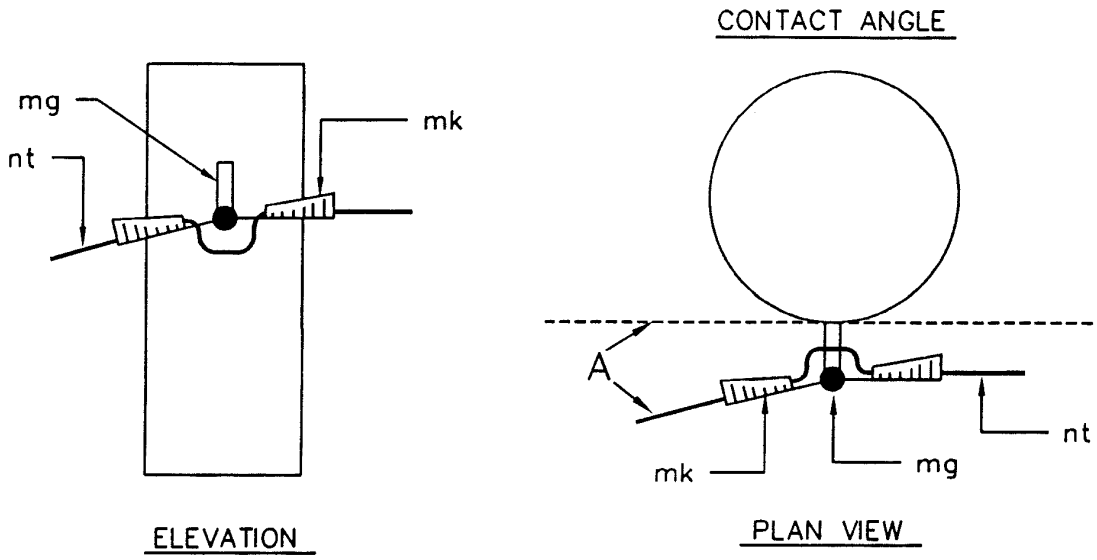

FIGURE A: Aerial service wires whose contact angle (A) exceeds five degrees and/or whose adjacent span lengths are different by 25 percent or more.

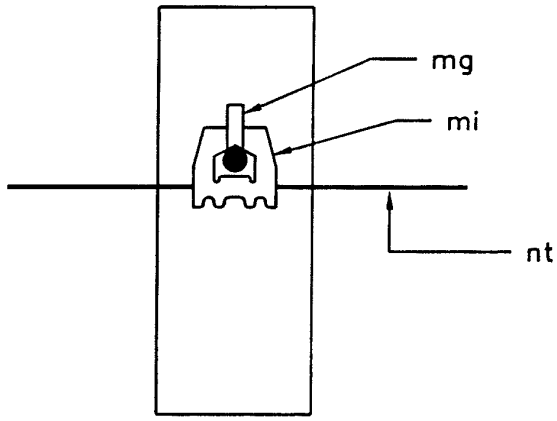

FIGURE B: Aerial service wires whose contact angle (A) is less than five degrees and/or whose adjacent span lengths are different by less than 25 percent.

ITEM	NO. REQUIRED	MATERIAL
*mg	As required	Hooks, drive
nt	As required	Wire, aerial service
mk	As required	Clamps, drop wire
*mi	As required	Support, drop wire

RURAL TELECOMMUNICATIONS CONSTRUCTION PRACTICES
SERVICE WIRE ATTACHMENT AT INTERMEDIATE POLE

Scale: NTS		August 1997
		504

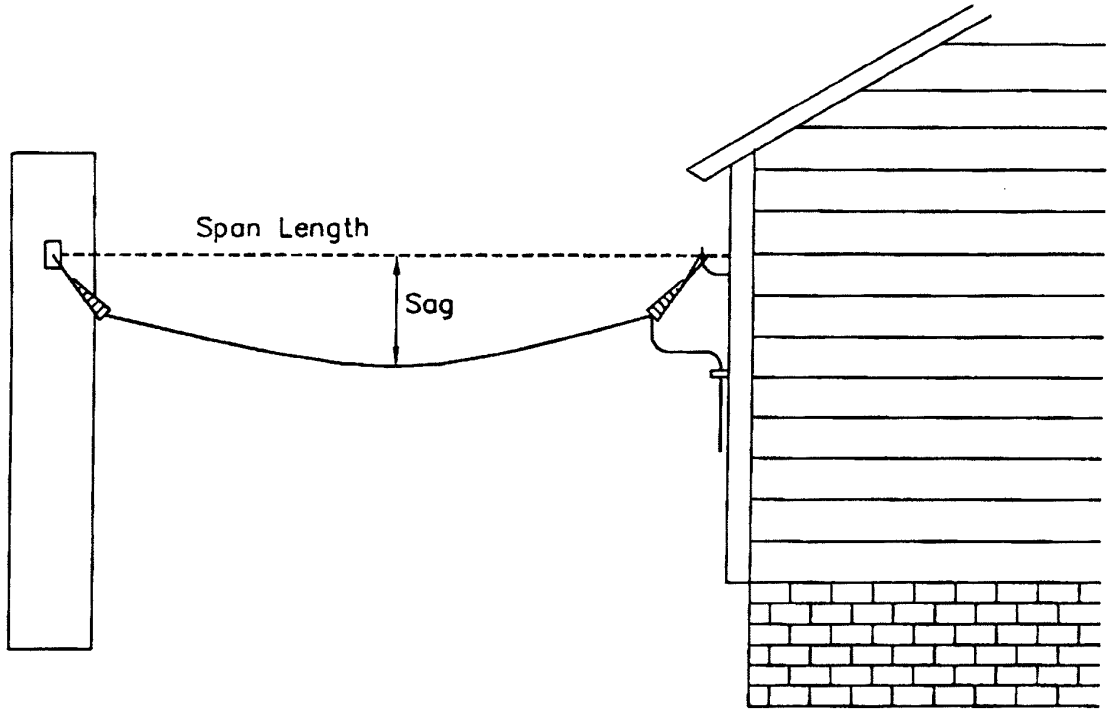

MINIMUM STRINGING SAG – COPPER COVERED STEEL REINFORCED (CCSR) and NONMETALLIC REINFORCED (NMR) AERIAL SERVICE WIRES

SPAN LENGTH ft (m)	SAG–MEDIUM AND LIGHT LOADING DISTRICTS	SAG–HEAVY LOADING DISTRICT
100 (30.5) OR LESS	20 in. (510 mm)	20 in. (510 mm)
125 (38)	34 in. (860 mm)	34 in. (860 mm)
150 (46)	4 ft (1.2 m)	4 ft (1.2 m)
175 (53)	5,5 ft (1.7 m)	7 ft (2.1 m)
200 (61)	7 ft (2.1 m)	11 ft (3.4 m)
225 (66.5)	9 ft (2.7 m)	
250 (76)	11 ft (3.4 m)	

Note: To reduce vibration and dancing, service wire shall be twisted one complete turn for each 10 ft (3 m) of span length at the time installation.

RURAL TELECOMMUNICATIONS CONSTRUCTION PRACTICES AERIAL SERVICE WIRE SAGS		
Scale: NTS		August 1997
		505

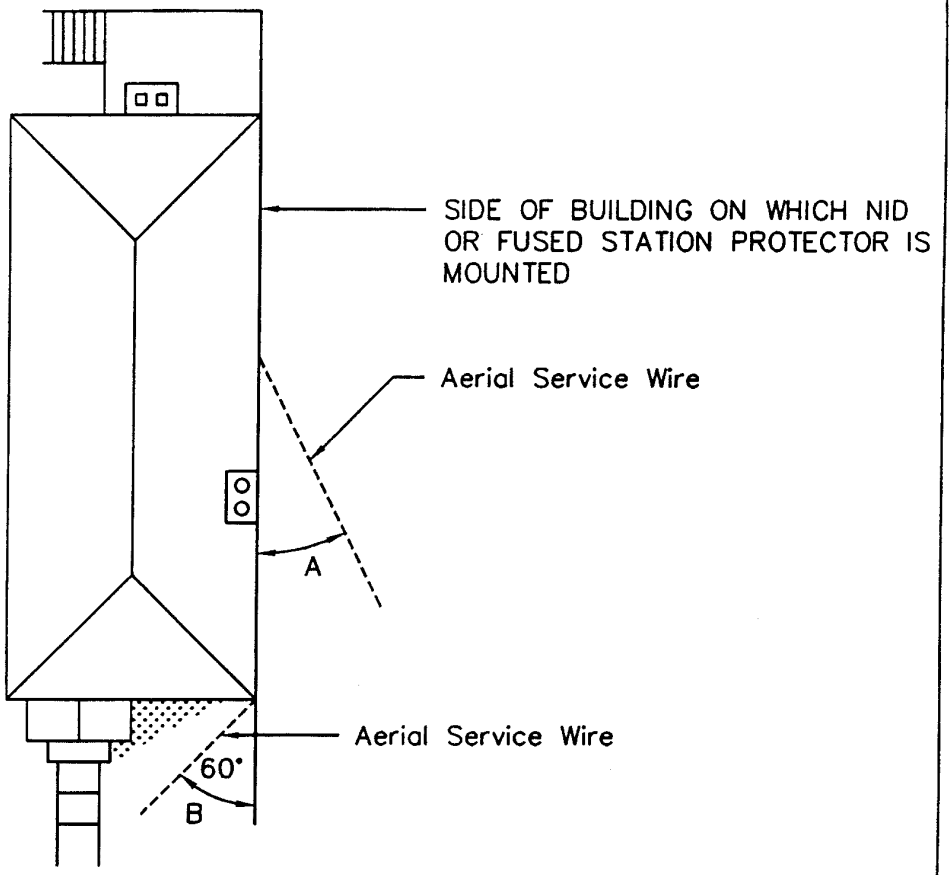

Frame Buildings Where NIDs Containing Fuseless Station Protectors are Used on Fire Resistant Buildings.

Use house hook or drop wire hook for any angle except angle B. When necessary to place service wire within angle B use "S" knob with corner bracket to avoid service wire attachment on front of building.

Frame Buildings Where Fused Station Protectors are Used.

If angle A is less than 30° use "S" knob. If angle A is greater than 30° use "S" knob with 5/16 in. (7.9 mm) angle screw. When necessary to place service wire within angle B use "S" knob with corner bracket to avoid service wire attachments on front of buildings.

RURAL TELECOMMUNICATIONS CONSTRUCTION PRACTICES SELECTION OF SERVICE WIRE ATTACHMENT		
Scale: NTS		August 1997
		506

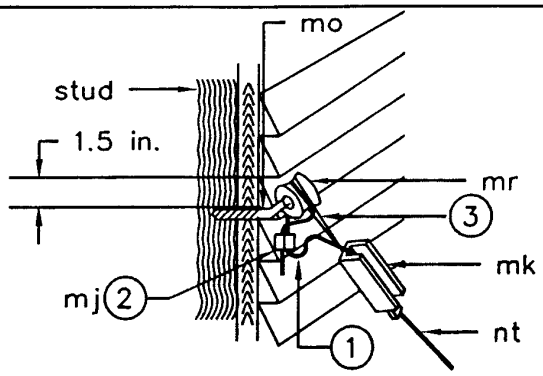

VERTICAL BUILDING RUN(Angle Screw)

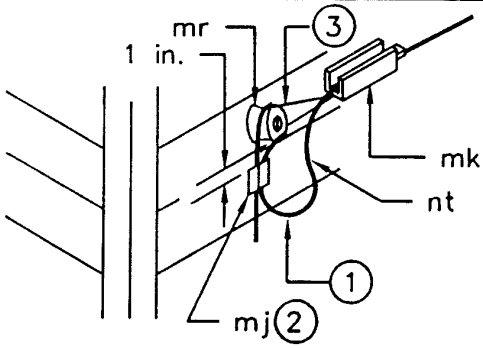

VERTICAL BUILDING RUN

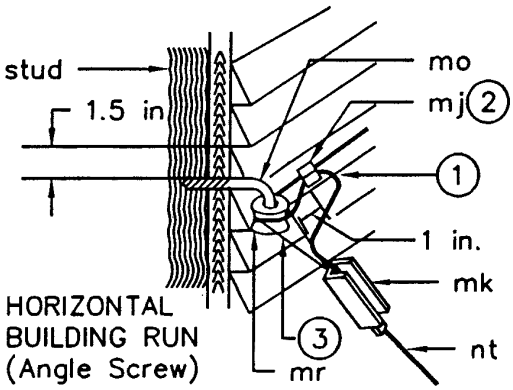

HORIZONTAL BUILDING RUN (Angle Screw)

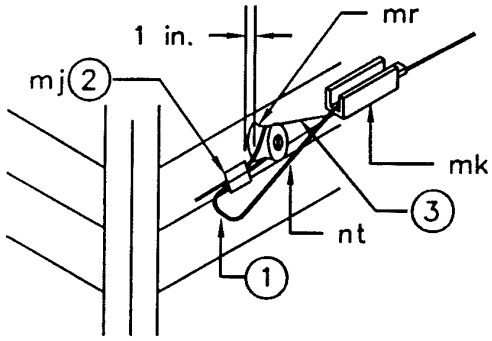

HORIZONTAL BUILDING RUN

Notes:

1. Provide slack wire in the form of a smooth curve. Make sure exposed wire will not contact building.
2. Close drop wire clip firmly on wire with side cutting or equivalent pliers.
3. Bail of clamp shall not bear against aerial service wire.
4. All house attachments illustrated shall be firmly anchored in studs.
5. For converting English units to metric units use 1 in. = 25.4 mm.

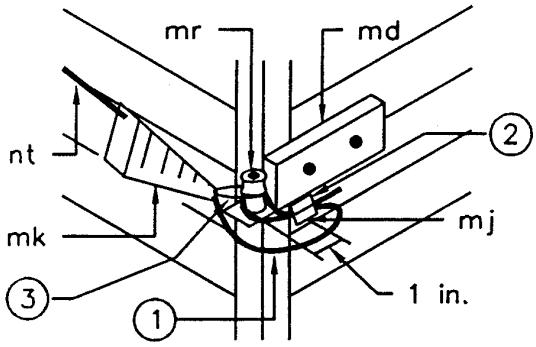

HORIZONTAL BUILDING RUN (Corner Bracket)

ITEM	MATERIAL
mk	Clamp, drop wire
*md	Bracket, house
*mr	Knob, insulator, "S"

ITEM	MATERIAL
–	Washer, 1.25 in. OD, 0.5 in. ID
*mo	Screw, angle, 5/16 in.
nt	Wire, aerial service
*mj	Clip, drop wire

RURAL TELECOMMUNICATIONS CONSTRUCTION PRACTICES
INSULATED FIRST ATTACHMENTS FOR
AERIAL SERVICE WIRE

Scale: NTS | August 1997

507

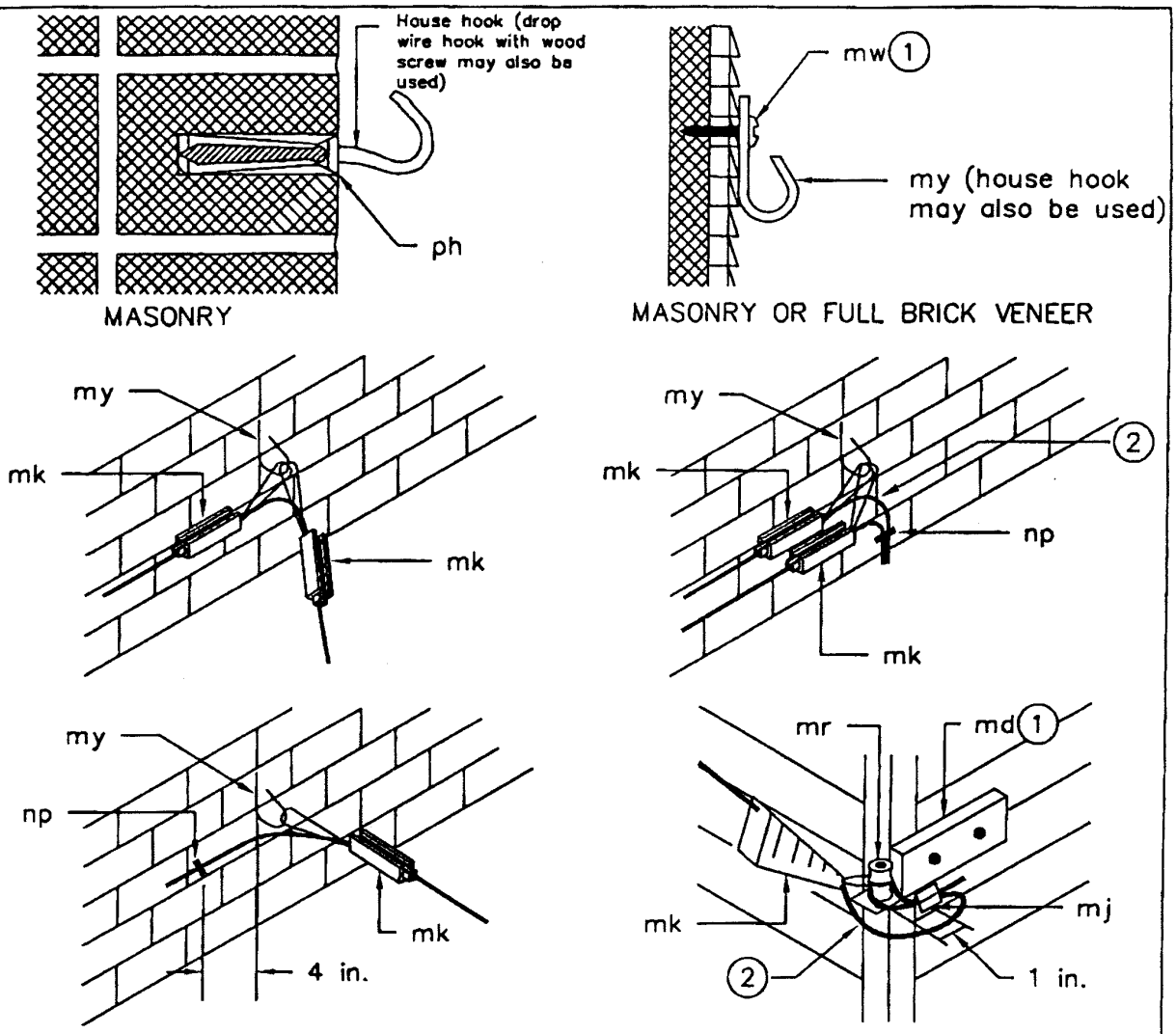

Notes:

1. See Table 4 for appropriate fasteners to be used with attachments. Expansion anchors not required on frame buildings, attachments must be firmly secured in studs.
2. Provide slack wire in the form of a smooth curve.
3. For converting English units to metric units use 1 in. = 25.4 mm.

ITEM	MATERIAL
mk	Clamp, drop wire
*md	Bracket, house
*mr	Knob, insulator, "S"
–	Hook, house

ITEM	MATERIAL
*mw	Screw, R.H., stainless steel, wood
*my	Hook, drop wire
*ph	Anchor, expansion
np	Clamp, cable
*mj	Clip, drop wire

RURAL TELECOMMUNICATIONS CONSTRUCTION PRACTICES
UNINSULATED FIRST ATTACHMENTS FOR
AERIAL SERVICE WIRE

Scale: NTS | August 1997

508–1

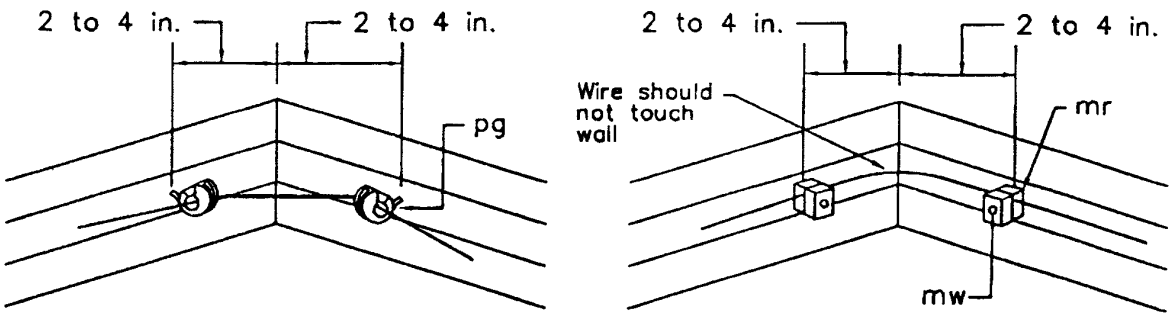

INSIDE CORNER

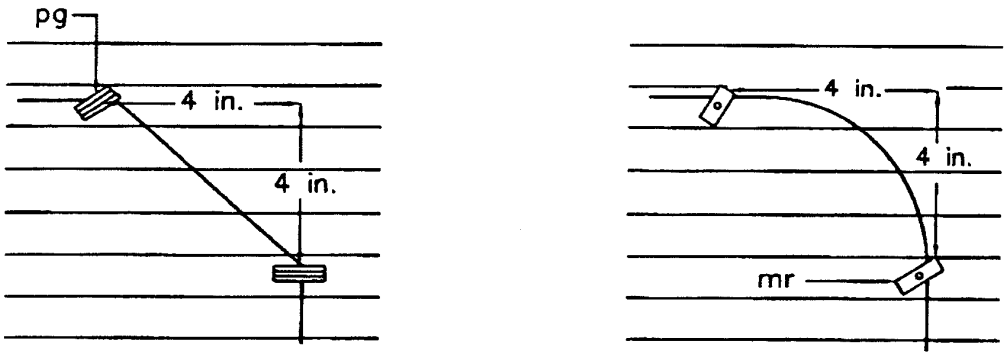

TURN

Notes:

1. Refer to Table 4 for appropriate fastening device.

2. For converting English units to metric units use 1 in. = 25.4 mm.

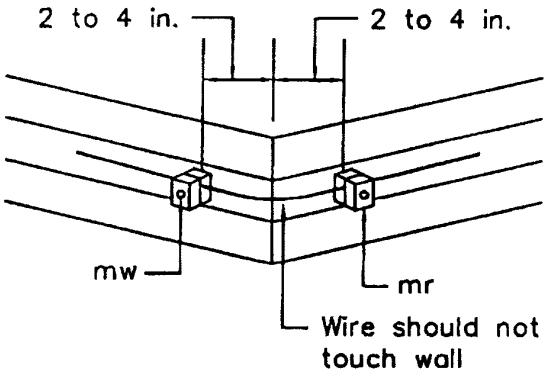

OUTSIDE CORNER

ITEM	NO. REQUIRED	MATERIAL
*pg	as required	Screw eye, insulated
*mr	as required	Knob, insulator, "C"
*mw	as required	Screw, R.H., wood

RURAL TELECOMMUNICATIONS CONSTRUCTION PRACTICES
INSULATED INTERMEDIATE ATTACHMENTS
FOR SERVICE WIRES

Scale: NTS		August 1997
		510

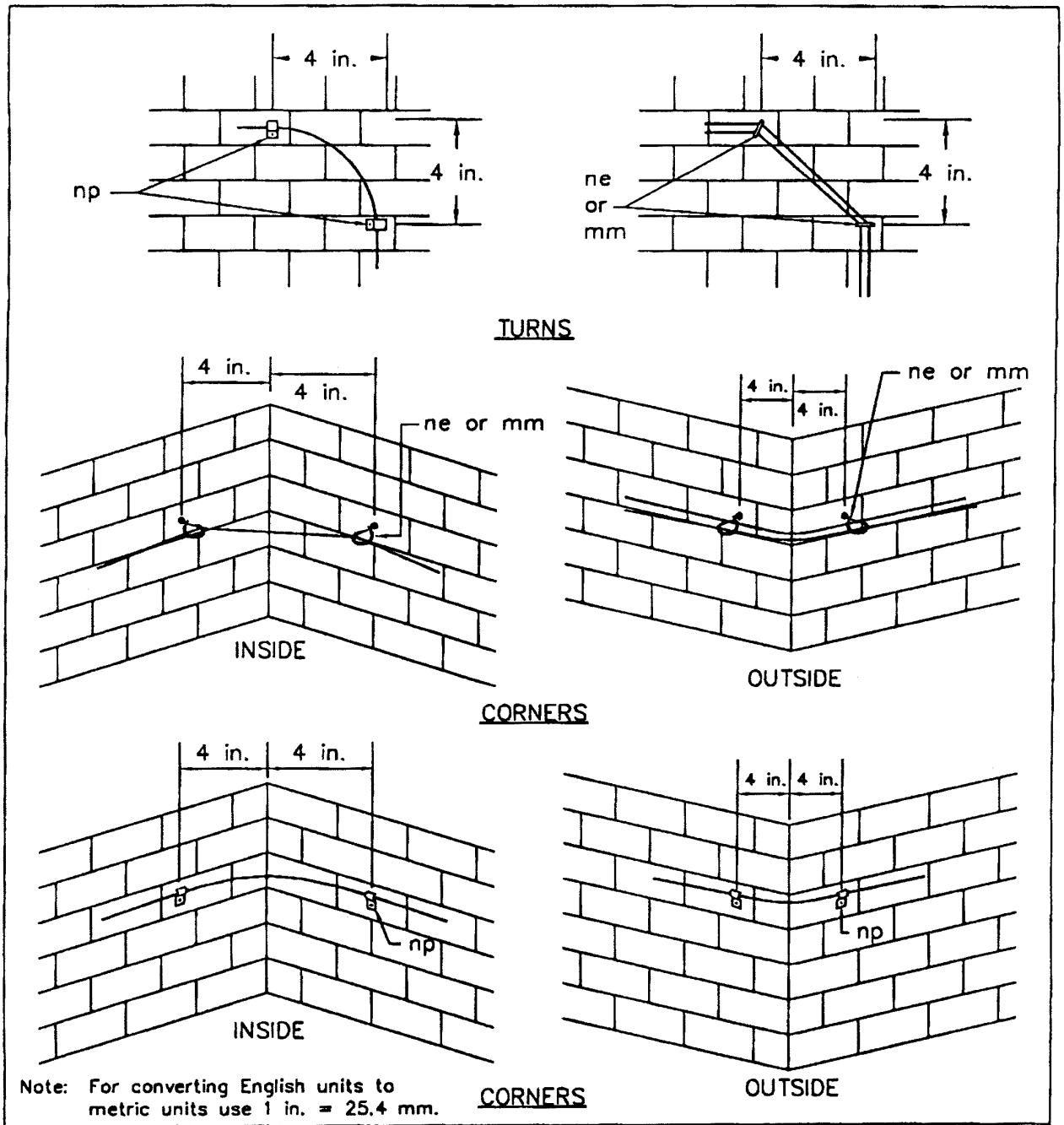

Note: For converting English units to metric units use 1 in. = 25.4 mm.

ITEM	NO. REQUIRED	MATERIAL
*ne	as required	Rings, bridle
*mm	as required	Rings, drive
*np	as required	Clamps, cable, one hole offset

RURAL TELECOMMUNICATIONS CONSTRUCTION PRACTICES
UNINSULATED INTERMEDIATE ATTACHMENTS
FOR SERVICE WIRES

Scale: NTS | August 1997

510–1

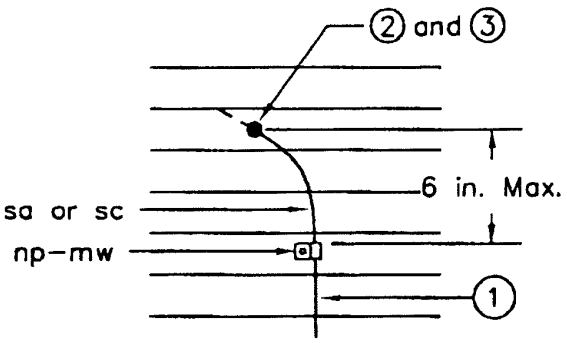

SKETCH A: Buried Service Above Grade Entrance

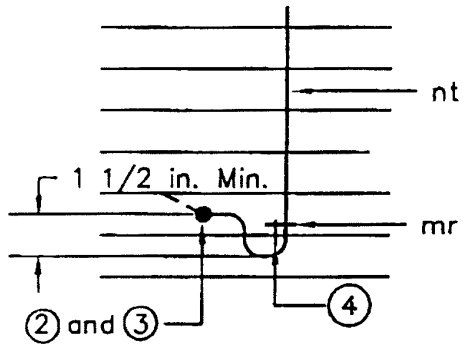

SKETCH B: Aerial Service Wire – Aerial Service Entrance

Notes:

① The first attachment of the buried wire to the building should be located approximately 4 inches above the ground. The remaining attachments shall be spaced approximately 14 inches apart.

② A porcelain or plastic tube shall be employed only when insulated attachments are required for support of aerial service wire on buildings.

③ Entrance hole shall be drilled to slope slightly upward. Except where a porcelain or plastic tube is required, all wires entering the hole shall be taped for a tight fit. When the aerial service wire approaches from above the entrance hole, a drip loop shall be made as shown.

④ Insert short piece of aerial service wire to cushion "C" knob.

⑤ Seal both ends of hole or conduit with duct seal.

⑥ For converting English units to metric units use 1 in. = 25.4 mm.

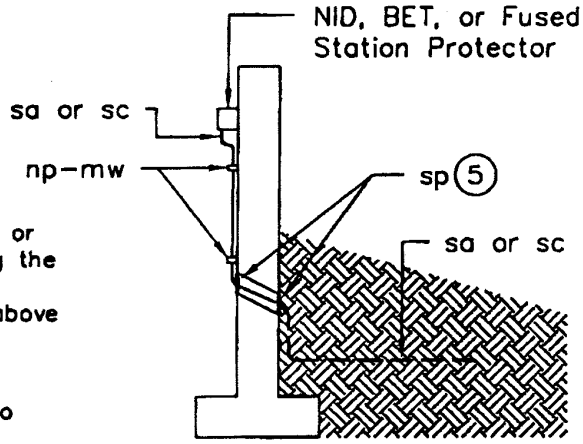

SKETCH C: Buried Service – Below Grade Entrance

ITEM	MATERIALS	ITEM	MATERIALS
*mr	Knob, insulator, "C"	*mw	Screw, wood
nt	Wire, aerial service	sa/sc	Wire or cable, filled, buried
–	Tube, plastic	sp	Duct seal
*np	Clamp, one–hole offset type		

RURAL TELECOMMUNICATIONS CONSTRUCTION PRACTICES
SERVICE ENTRANCES

Scale: NTS		August 1997
		510–2

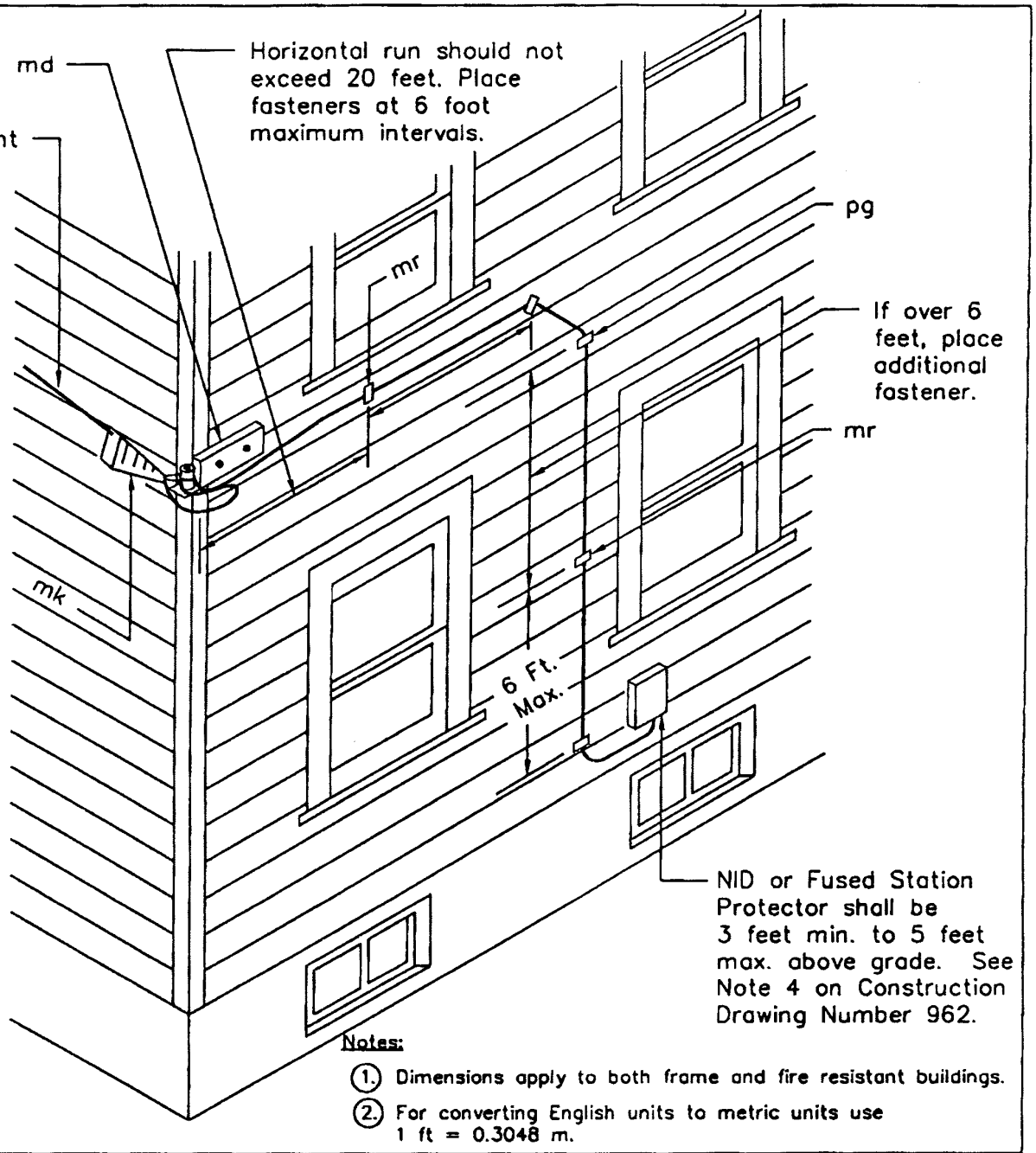

Notes:

1. Dimensions apply to both frame and fire resistant buildings.
2. For converting English units to metric units use 1 ft = 0.3048 m.

ITEM	MATERIAL	ITEM	MATERIAL
mk	Clamp, drop wire	nt	Wire, aerial service
*md	Bracket, corner	*pg	Screwseyes, porcelain, insulated
*mr	Knob, "C"	*mr	Knob, insulator

RURAL TELECOMMUNICATIONS CONSTRUCTION PRACTICES
AERIAL SERVICE WIRE RUN ON BUILDINGS

Scale: NTS		August 1997
		513

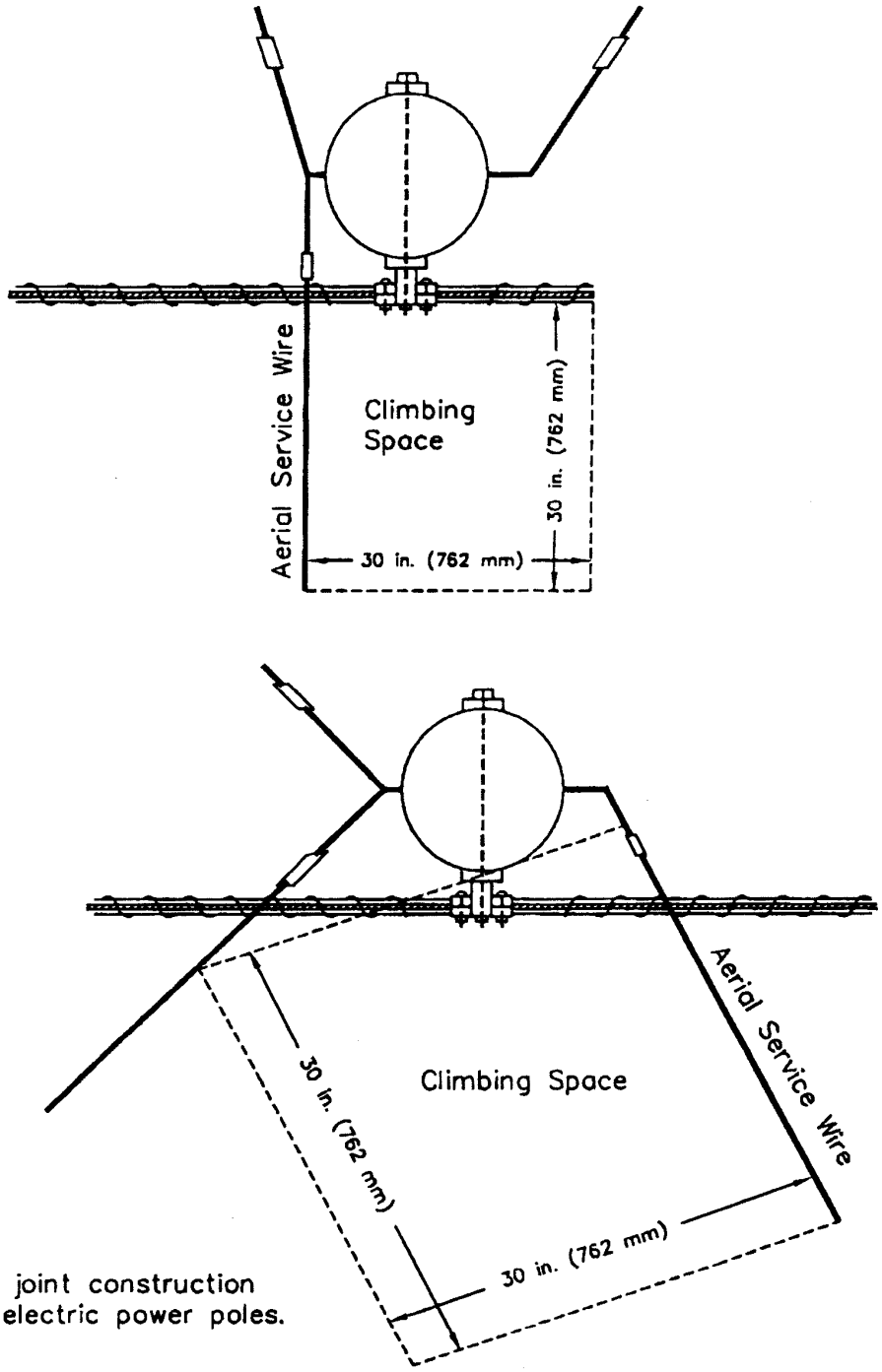

Note: For joint construction on electric power poles.

RURAL TELECOMMUNICATIONS CONSTRUCTION PRACTICES CLIMBING SPACE		
Scale: NTS		August 1997
		702

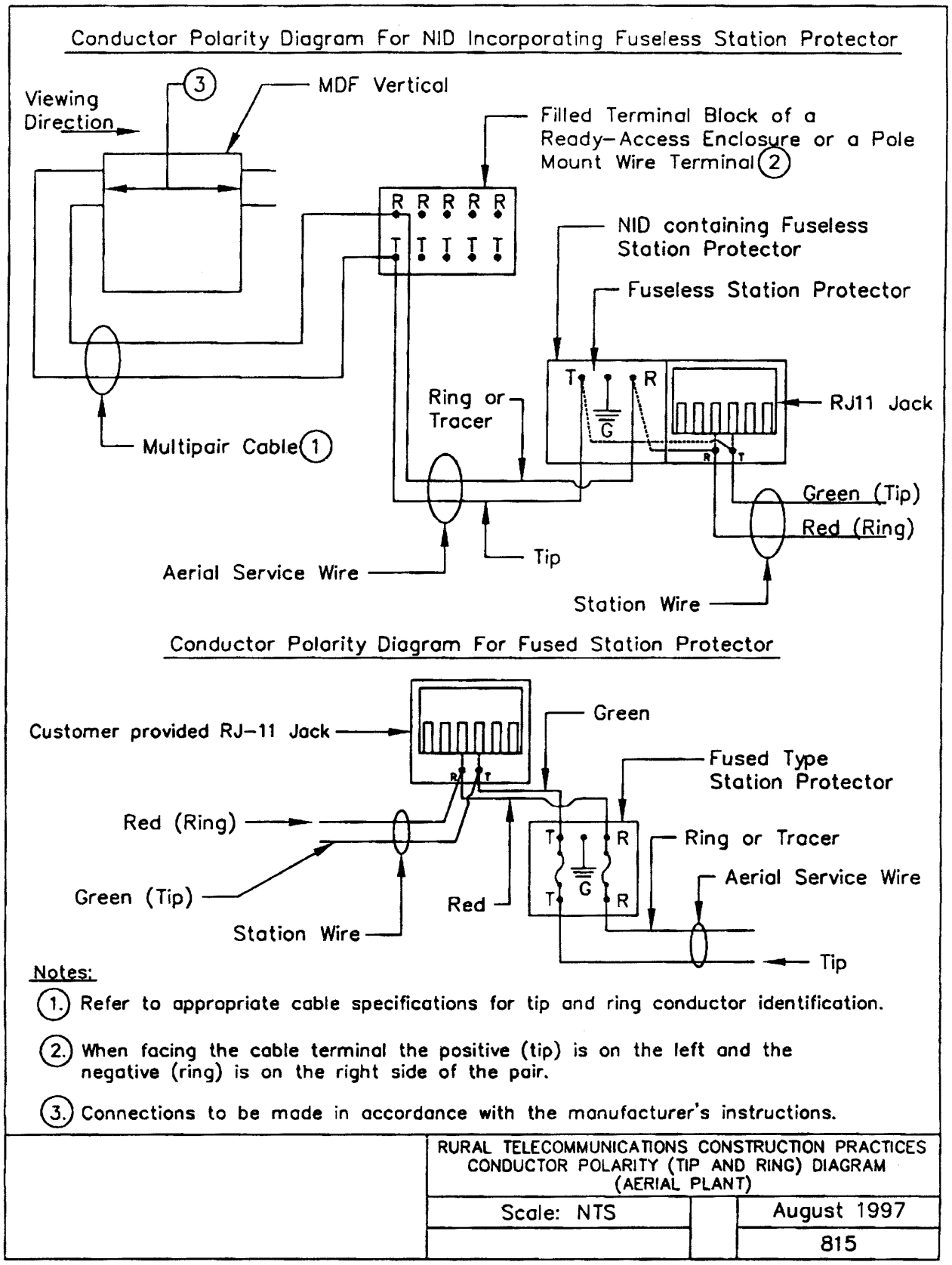
Conductor Polarity Diagram For NID Incorporating Fuseless Station Protector
Viewing Direction
3
MDF Vertical
Filled Terminal Block of a Ready-Access Enclosure or a Pole Mount Wire Terminal 2
R R R R R
T T T T T
NID containing Fuseless Station Protector
Fuseless Station Protector
T
R
G
RJ11 Jack
Ring or Tracer
Multipair Cable 1
Green (Tip)
Red (Ring)
Aerial Service Wire
Tip
Station Wire
Conductor Polarity Diagram For Fused Station Protector
Customer provided RJ-11 Jack
Green
Fused Type Station Protector
Red (Ring)
Ring or Tracer
Aerial Service Wire
Green (Tip)
Red
Station Wire
Tip
Notes:
1. Refer to appropriate cable specifications for tip and ring conductor identification.
2. When facing the cable terminal the positive (tip) is on the left and the negative (ring) is on the right side of the pair.
3. Connections to be made in accordance with the manufacturer's instructions.
RURAL TELECOMMUNICATIONS CONSTRUCTION PRACTICES
CONDUCTOR POLARITY (TIP AND RING) DIAGRAM
(AERIAL PLANT)
Scale: NTS
August 1997
815

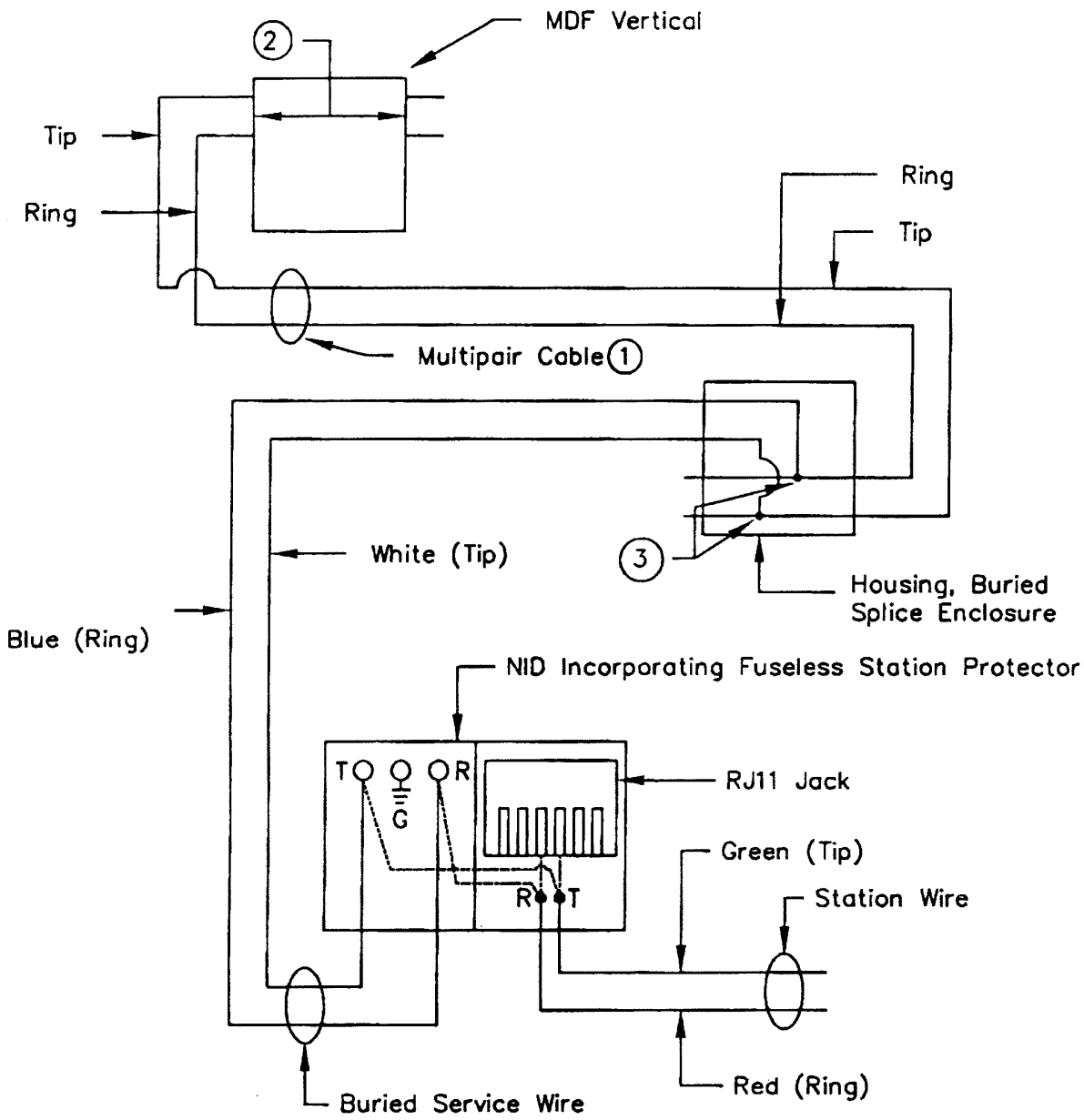

Notes:

1. Refer to appropriate cable specifications for tip and ring conductor identification.
2. Connections to be made in accordance with the manufacturer's instructions.
3. Connections to be made in accordance with 7 CFR 1755.200, "RUS standard for splicing copper and fiber optic cables."

RURAL TELECOMMUNICATIONS CONSTRUCTION PRACTICES BURIED PLANT CONDUCTOR POLARITY DIAGRAM		
Scale: NTS		August 1997
		815–1

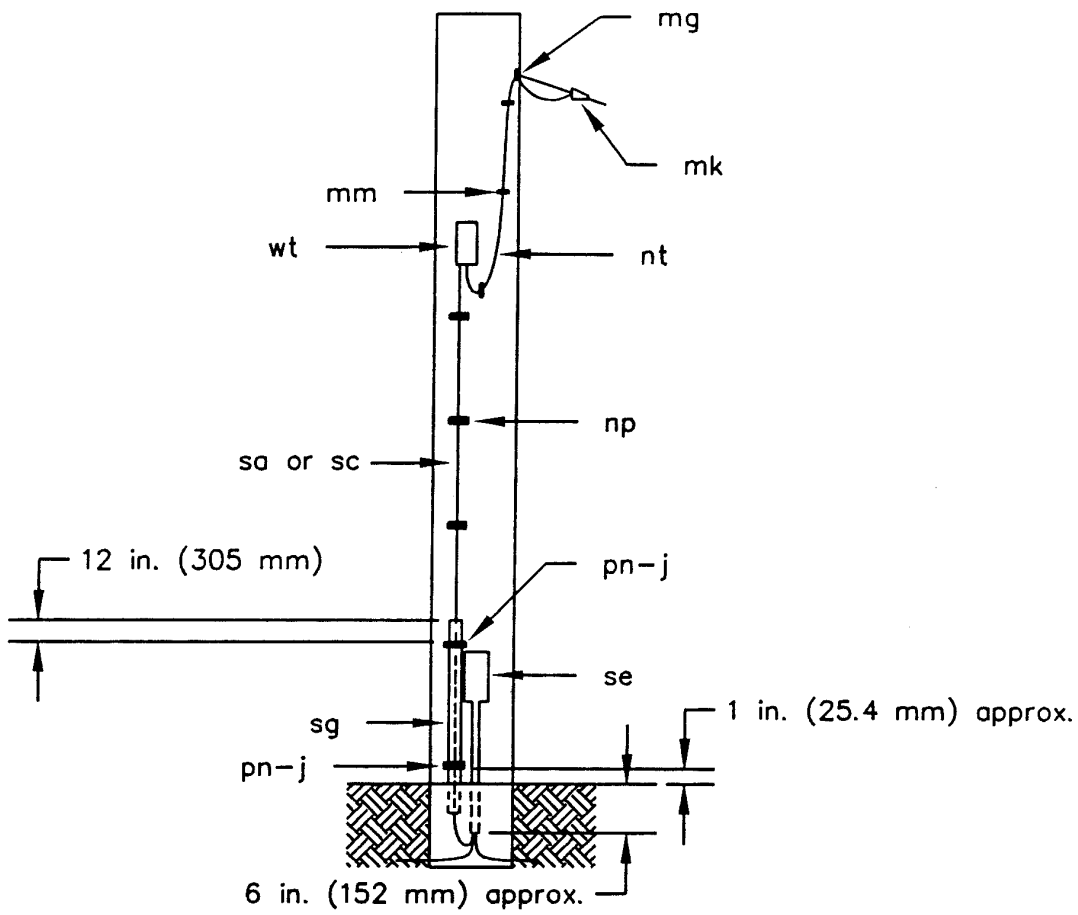

ITEM	MATERIALS	REQUIRED
wt	Terminal, wire, filled, unprotected, pole–mounted (specify pair size)	1
*pn	Strap, riser guard	2
*np	Clamp, cable (1–one hole, offset)	as req'd
sa or sc	Wire or cable, filled, buried	as req'd
mk	Clamp, drop wire	1
nt	Wire, aerial service	as req'd
*mg	Hook, drive	as req'd
*mm	Ring, drive	as req'd
se	Housing, outside plant	1
sg	Guard, riser, 1"ID*8'	as req'd
j	Screws, lag (size as required)	4

RURAL TELECOMMUNICATIONS CONSTRUCTION PRACTICES
AERIAL DROP WIRE TO BURIED PLANT

Scale: NTS		August 1997
		912

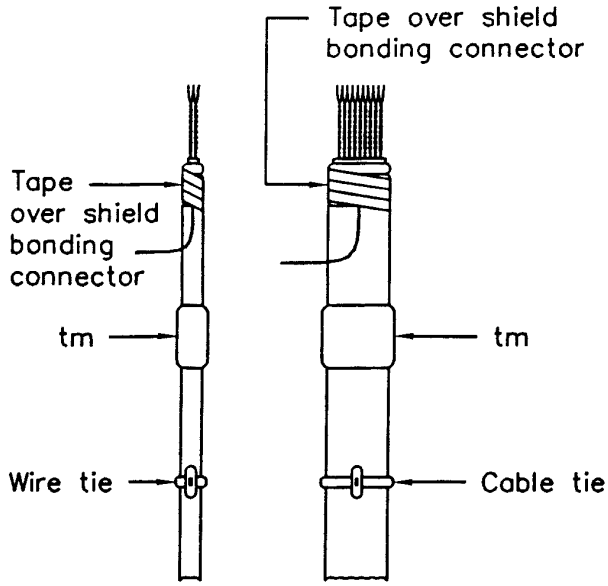

Buried Service Wire Marker

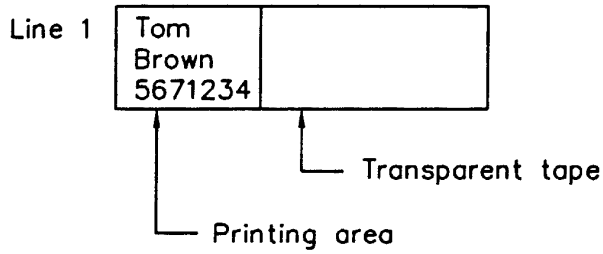

Buried Cable Marker

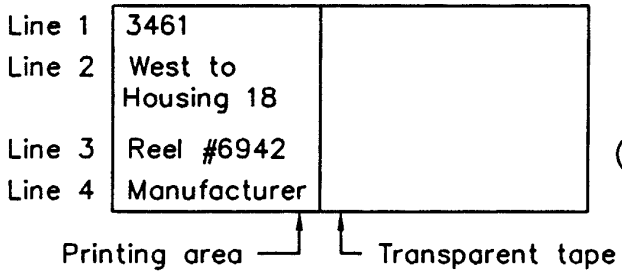

Notes:

1. Markers shall be installed on all buried wires and cables at each housing as shown in 7 CFR 1755.200.

2. The marker shall be wrapped around the cable in a manner such that the printed portion of the marker is completely covered and protected by at least one layer of transparent tape. On cables too large for this to be accomplished with a single marker, a second marker shall be applied so that the clear tape of the second marker provides protection for the printed portion of the first. The information shall be legibly printed and shall be readily visible.

3. The markers shall contain the following information unless indicated otherwise by the Borrower or Borrower's Engineer.

Buried Service Wire:

Line 1 – Subscribers identification (Such as: name, telephone number, or address)

Buried Cable or Wire:

Line 1 – Nearest sequential marking
Line 2 – Direction of cable or wire
Line 3 – Cable reel number
Line 4 – Name of cable manufacturer

4. Other methods of directional marking may be used when specified by the Borrower or Borrower's Engineer.

ITEM	MATERIAL	ITEM	MATERIAL
*tm	Tape, marker		

RURAL TELECOMMUNICATIONS CONSTRUCTION PRACTICES
BURIED CABLE AND WIRE DIRECTIONAL MARKING

Scale: NTS		August 1997
		958

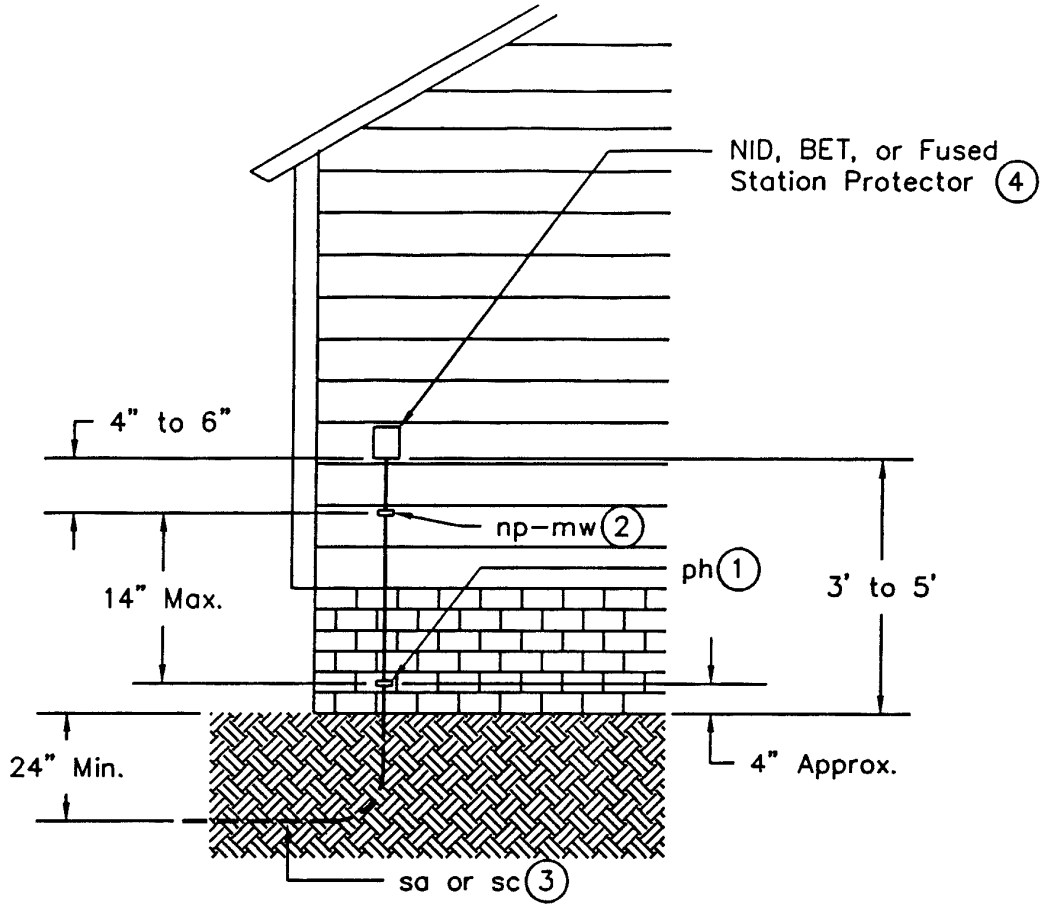

Note:

(1.) When mounting NID, BET, or fused station protector and clamps on masonary surface, use screw expansion anchors or equivalent manual or machine-driven devices.

(2.) Attach filled buried service wire or cable to building with one-hole offset clamps spaced 14 in. max. apart. Where grounding conductor parallels service wire or cable, both wires may be run under the same attachment.

(3.) Place filled buried service wire or cable snug against building.

(4.) Details of NID, BET, or Fused station protector terminations are shown on Figures 10 through 16, and 19.

(5.) For converting English units to metric units use 1 in. = 25.4 mm and 1 ft = 0.03048 m.

ITEM	MATERIALS	ITEM	MATERIALS
–	NID, protected, station, outside	*rg	Wire, station
sa	Wire, filled, buried	*mw	Screw, stainless steel, wood
*ph	Anchor, expansion, screw	sc	Cable, filled, buried
*np	Clamp, one-hole offset type		

RURAL TELECOMMUNICATIONS CONSTRUCTION PRACTICES
BURIED WIRE SERVICE INSTALLATION ON BUILDINGS

Scale: NTS		August 1997
		962

Dated: November 20, 1998.

Jill Long Thompson,

Under Secretary Rural Development.

[FR Doc. 98–32207 Filed 12–18–98; 8:45 am]

BILLING CODE 3410–15–C